UNITED STATES DEPARTMENT OF THE INTERIOR
BUREAU OF LAND MANAGEMENT

MELSTONE DAM LIVESTOCK WATER SYSTEM

MUSSELSHELL COUNTY, MONTANA

BILLINGS FIELD OFFICE

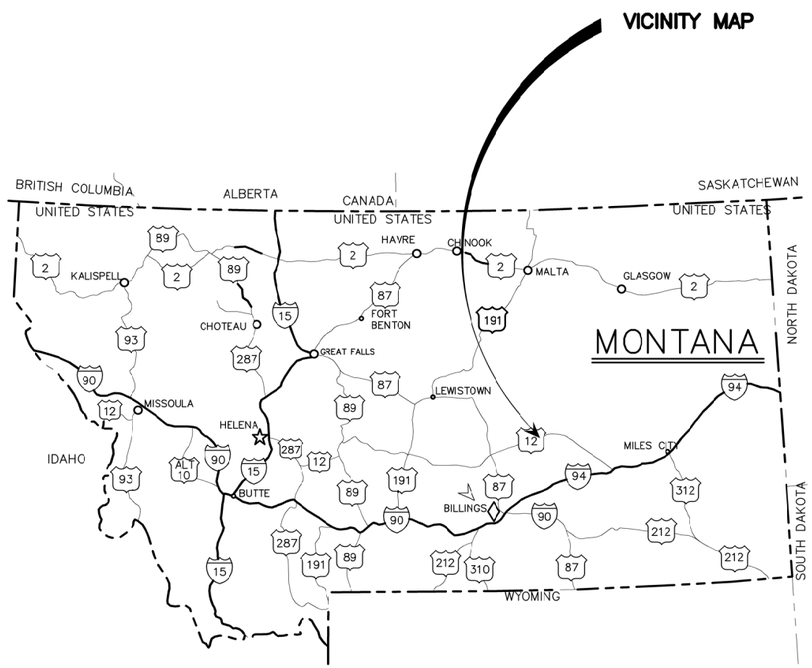

STATE REFERENCE MAP

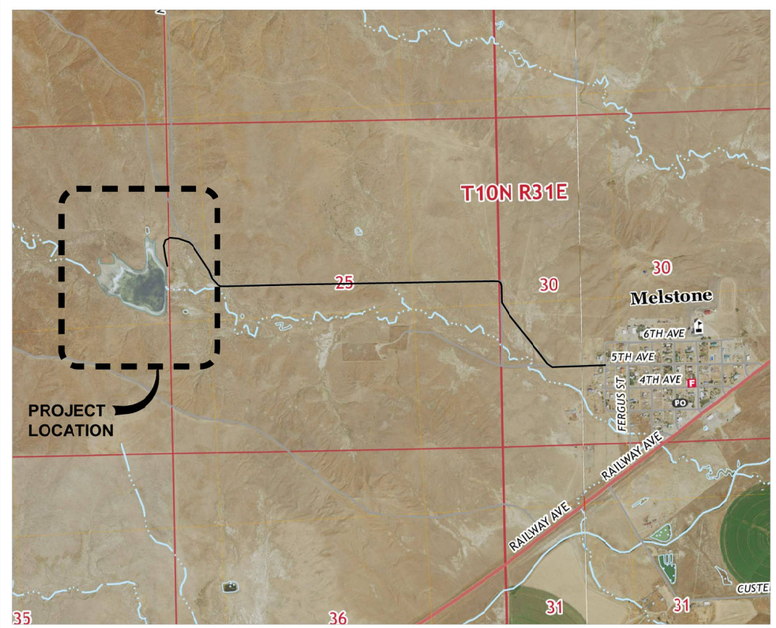

VICINITY MAP

DRAWING INDEX

SHEET	DESCRIPTION	SHEET	DESCRIPTION
1	COVER SHEET AND SHEET INDEX		
2	PLAN AND PROFILE		
3	DETAILS		

UNITED STATES DEPARTMENT OF THE INTERIOR
BUREAU OF LAND MANAGEMENT

COVER SHEET AND SHEET INDEX
MELSTONE DAM LIVESTOCK WATER SYSTEM
BILLINGS FIELD OFFICE MONTANA

MARK	REVISION	DATE	APPROVED

AUTOCAD NAME: Melstone Livestock Water System.dwg
DESIGN OFFICE: MONTANA STATE OFFICE
DESIGNED BY: JH
CHECKED BY: VALUE DATE: #####
APPROVED BY: ##### DATE: #####

SHEET 1 OF 3

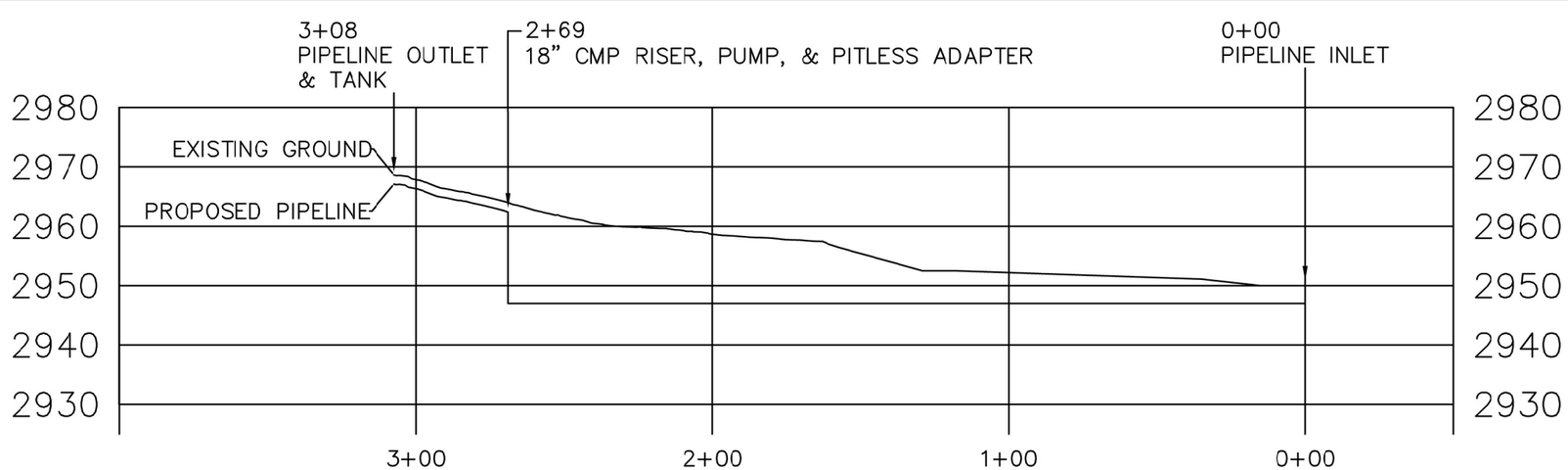

U.S. DEPARTMENT OF THE INTERIOR
BUREAU OF LAND MANAGEMENT

UNITED STATES DEPARTMENT OF THE INTERIOR
BUREAU OF LAND MANAGEMENT

PIPELINE PLAN & PROFILE

MELSTONE DAM LIVESTOCK WATER SYSTEM

MONTANA

BILLINGS FIELD OFFICE

MARK	REVISION	DATE	APPROVED

AUTOCAD NAME: Melstone Livestock Water System.dwg

DESIGN OFFICE: MONTANA STATE OFFICE

DESIGNED BY: JH DATE: 4/20/2026

DRAWN BY: JH DATE: 4/20/2026

CHECKED BY: #### DATE: ####

APPROVED BY: #### DATE: ####

SHEET 2 OF 3

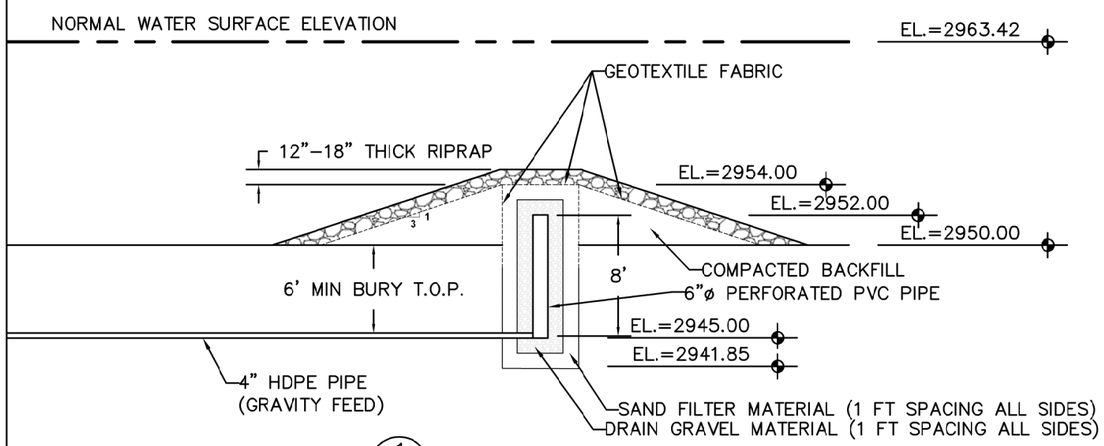

1 | 2 3 **DETAIL**
LIVESTOCK WATER INLET

NOTE: RIPRAP AND TWO–STAGE FILTER TO BE PLACED ON ALL SIDES WITH PERFORATED PIPE AS THE CENTER.

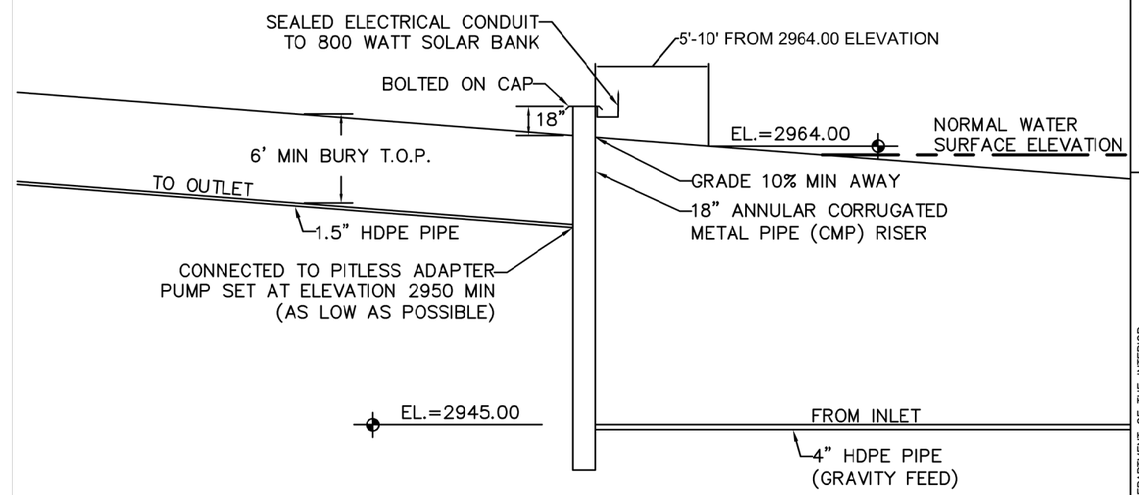

2 | 2 3 **DETAIL**
LIVESTOCK WATER PUMP

NOTE: PIPELINE MUST BE CONSISTENT ELEVATION FROM INLET FOR GRAVITY FEED TO PUMP

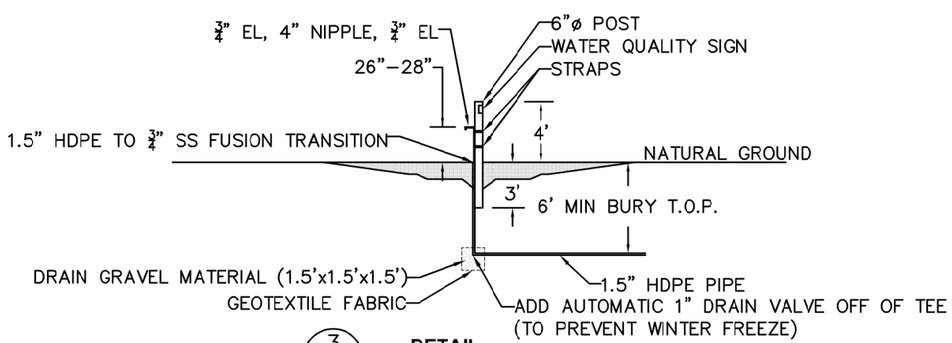

3 | 2 3 **DETAIL**
LIVESTOCK WATER OUTLET

NOTE: INSTALL 1300 GAL LIVESTOCK TANK AT OUTLET SO THAT ABOUT 50% IS ON OUTSIDE OF FENCE

U.S. DEPARTMENT OF THE INTERIOR
BUREAU OF LAND MANAGEMENT

UNITED STATES DEPARTMENT OF THE INTERIOR
BUREAU OF LAND MANAGEMENT

DETAILS

MELSTONE DAM LIVESTOCK WATER SYSTEM

MONTANA

BILLINGS FIELD OFFICE

MARK	REVISION	DATE	APPROVED

AUTOCAD NAME: Melstone Livestock Water System.dwg
DESIGN OFFICE: MONTANA STATE OFFICE
DESIGNED BY: JH DATE: 4/20/2026
DRAWN BY: JH DATE: 4/20/2026
CHECKED BY: #### DATE: ####
APPROVED BY: #### DATE: ####

SHEET 3 OF 3