U.S. DEPARTMENT OF AGRICULTURE
AGRICULTURAL RESEARCH SERVICE

REPAIR HVAC SYSTEMS, BUILDING 1 - BID ALTERNATE

DESIGN CONTRACT NO: 12405B21D0003

DESIGN ORDER NO: 1232SA25F0354

CENTER FOR MEDICAL AGRICULTURAL AND VETERINARY ENTOMOLOGY (CMAVE)

1600 SW 23RD DRIVE

GAINESVILLE, FL 32608

VICINITY MAP

NO SCALE

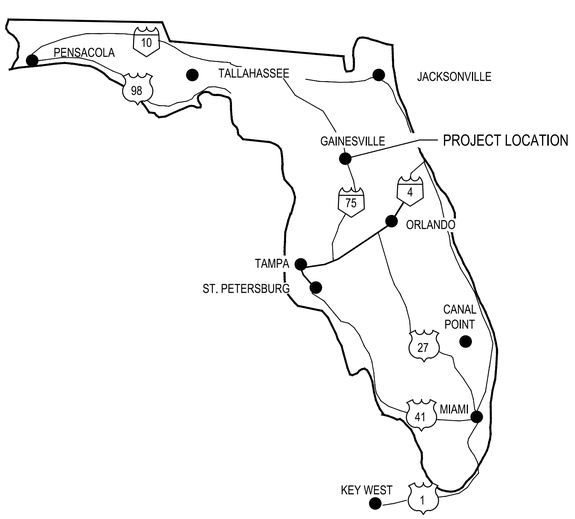

LOCATION MAP

NO SCALE

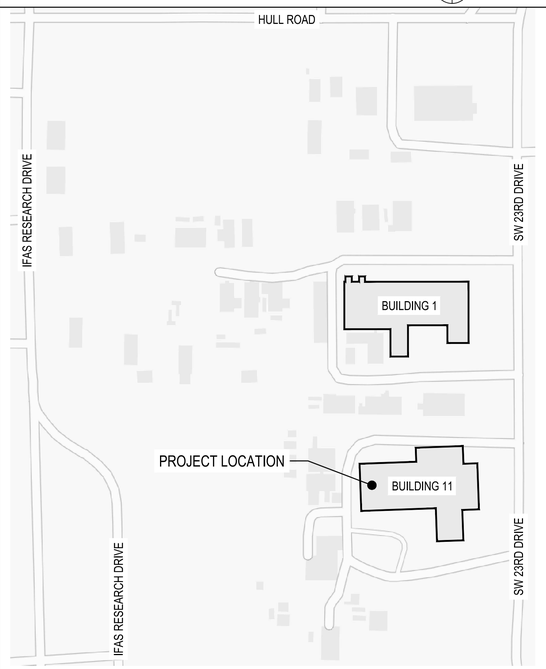

CENTER FOR MEDICAL AGRICULTURAL AND VETERINARY ENTOMOLOGY (CMAVE)
1600 SW 23RD DRIVE
GAINESVILLE, FL 32608

PROJECT INFORMATION

GENERAL NOTES:

1. THE CONTRACTOR MUST FIELD VERIFY ALL DIMENSIONS AND EXISTING CONDITIONS PRIOR TO PERFORMING WORK. FABRICATION OR PURCHASE OF ANY EQUIPMENT, MATERIALS, AND ASSEMBLIES. ANY DISCREPANCIES MUST BE BROUGHT TO THE CONTRACTING OFFICER'S ATTENTION FOR RESOLUTION BEFORE PROCEEDING WITH ANY CONSTRUCTION, FABRICATION, OR EQUIPMENT PURCHASE.
2. CONTRACTOR MUST PERFORM A THOROUGH SURVEY OF THE BUILDING AND DOCUMENT ANY DEFICIENCIES IN BUILDING FINISHES, BUILDING EQUIPMENT AND BUILDING SYSTEMS PRIOR TO BEGINNING WORK. SUBMIT DOCUMENT WITH PHOTOGRAPHS TO THE CONTRACTING OFFICER.
3. IT IS THE RESPONSIBILITY OF THE CONTRACTOR TO MOVE EXISTING FURNISHINGS TO ACCOMMODATE THE WORK. PROTECT FINISHES AND FURNISHINGS DURING THE WORK.
4. THE BUILDING WILL BE UNOCCUPIED FOR CONSTRUCTION AND THE ENTIRE BUILDING WILL BE AVAILABLE FOR THE DURATION OF THE CONSTRUCTION.

HAZARDOUS MATERIALS INFORMATION:

1. REFER TO THE HAZARDOUS MATERIALS SURVEY REPORT IN THE SPECIFICATIONS. CONTRACTOR MUST ABIDE BY ALL GOVERNING REGULATIONS IN REGARDS TO DISTURBANCE, REMOVAL AND DISPOSAL OF HAZARDOUS MATERIALS (REFERENCE SAID REPORT).
2. CONTRACTOR MUST ASSUME THAT ALL EXISTING PAINT COATINGS ON BUILDING MATERIALS AND SYSTEMS CONTAINS SOME LEVEL OF LEAD. ANY MATERIALS TO BE DISPOSED OF WITH PAINT COATINGS INTACT, MAY BE DISPOSED OF AS NORMAL CONSTRUCTION WASTE. THE CONTRACTOR MUST PROVIDE WORKER PROTECTION IN ACCORDANCE WITH OSHA FOR ANY DISTURBANCE OF EXISTING PAINT COATINGS.
3. THE HAZARDOUS MATERIALS SURVEY TOOK SAMPLES OF SUSPECT ASBESTOS-CONTAINING MATERIALS. LABORATORY ANALYSIS OF THE SAMPLES DID NOT TEST POSITIVE FOR ASBESTOS. SHOULD THE CONTRACTOR DISCOVER MATERIALS THEY REASONABLY BELIEVE TO CONTAIN ASBESTOS, THE WORK MUST STOP AND THE CONTRACTING OFFICER MUST BE NOTIFIED IMMEDIATELY.

PROTECTION OF EXISTING FACILITIES:

1. CONTRACTOR MUST PROTECT ALL EXISTING CONSTRUCTION DURING WORK INCLUDING, BUT NOT LIMITED TO, FINISHES, EQUIPMENT, DOORS, WINDOWS, FURNISHINGS AND SEATING. ANY DAMAGE TO EXISTING CONSTRUCTION MUST BE REPAIRED OR REPLACED NEW, LIKE-IN-KIND.

USDA

THE Johnson-McAdams FIRM P.A.
ARCHITECTS/ENGINEERS · PLANNING · SURVEYING · MANAGEMENT
P.O. BOX 513, GREENWOOD, MISSISSIPPI · (662) 455-4943

NO.	DATE	BY	DESCRIPTION

REVISIONS

A-E FIRM	USDA
PROJECT MGR	TEL
COR	E. WILSON
DESIGNER	JND
EPM	E. WILSON
CHECKED BY	BTD
SAFETY & HEALTH	TBD
JOB #	3925
REAL PROPERTY	TBD

USDA Agricultural Research Service

REPAIR HVAC SYSTEM, BULDINGS 1 AND 11 CENTER FOR MEDICAL AGRICULTURAL AND VETENARY ENTOMOLOGY (CMAVE) - GAINESVILLE, FLORIDA

BUILDING 11 - PHASE 1

TITLE SHEET

PROJECT NO.	USDA ARS 5601 SUNNYSIDE AVENUE RM 3-2102 BELTVILLE MD 20705	SHEET
---		T-101
DATE		1 OF 28
5/04/2026		

C:\Users\TOMLOV~1\AppData\Local\Temp\AcPublish_113848\T-101 P1.dwg
May 13, 2026 - 12:32pm

INDEX OF DRAWINGS

DRAWING NO.	SHEET NO.	TITLE
GENERAL		
T-101	1 OF 28	BUILDING 11 - PHASE 1 TITLE SHEET
T-102	2 OF 28	BUILDING 11 - PHASE 1 DRAWING LIST
CIVIL		
C-101	3 OF 28	BUILDING 11 - PHASE 1 MECHANICAL SITE PLAN
HVAC		
M-001	4 OF 28	BUILDING 11 - PHASE 1 GENERAL HVAC NOTES
M-002	5 OF 28	BUILDING 11 - PHASE 1 HVAC SYMBOL LEGEND
MD101	6 OF 28	BUILDING 11 - PHASE 1 FIRST FLOOR HVAC DEMO
MD102	7 OF 28	BUILDING 11 - PHASE 1 SECOND FLOOR HVAC DEMO
MD103	8 OF 28	BUILDING 11 - PHASE 1 EXISTING MECHANICAL SITE PLAN DEMO
MD401	9 OF 28	BUILDING 11 - PHASE 1 ENLARGED MECHANICAL ROOM DEMO
M-101	10 OF 28	BUILDING 11 - PHASE 1 FIRST FLOOR HVAC
M-102	11 OF 28	BUILDING 11 - PHASE 1 SECOND FLOOR HVAC
M-103	12 OF 28	BUILDING 11 - PHASE 1 MECHANICAL SITE PLAN
M-401	13 OF 28	BUILDING 11 - PHASE 1 ENLARGED MECHANICAL ROOM
M-501	14 OF 28	BUILDING 11 - PHASE 1 MECHANICAL DETAILS
M-502	15 OF 28	BUILDING 11 - PHASE 1 MECHANICAL DETAILS
M-601	16 OF 28	BUILDING 11 - PHASE 1 MECHANICAL SCHEDULES
M-602	17 OF 28	BUILDING 11 - PHASE 1 MECHANICAL SCHEDULES
M-603	18 OF 28	BUILDING 11 - PHASE 1 MECHANICAL SCHEDULES
M-701	19 OF 28	BUILDING 11 - DEDICATED OUTDOOR UNIT AHU-1 CONTROLS DIAGRAM
ELECTRICAL		
E-001	20 OF 28	BUILDING 11 - PHASE 1 ELECTRICAL LEGEND
ED101	21 OF 28	BUILDING 11 - PHASE 1 FIRST FLOOR ELECTRICAL DEMO
ED102	22 OF 28	BUILDING 11 - PHASE 1 SECOND FLOOR ELECTRICAL DEMO
ED103	23 OF 28	BUILDING 11 - PHASE 1 EXISTING ELECTRICAL SITE PLAN DEMO
E-101	24 OF 28	BUILDING 11 - PHASE 1 FIRST FLOOR ELECTRICAL PLAN
E-102	25 OF 28	BUILDING 11 - PHASE 1 SECOND FLOOR ELECTRICAL PLAN
E-103	26 OF 28	BUILDING 11 - PHASE 1 ELECTRICAL SITE PLAN
E-501	27 OF 28	BUILDING 11 - PHASE 1 EQUIPMENT SCHEDULE
E-701	28 OF 28	BUILDING 11 - PANEL SCHEDULES

WORK PHASING INFORMATION

THIS IS PROJECT CONSISTS OF PHASED CONSTRUCTION. SUBMIT A SEPARATE, STAND ALONE BID FOR EACH WORK PHASE. THE WORK IN THIS SET OF PLANS PERTAINS TO BUILDING 11 PHASE 1. REFER TO THE SPECIFICATIONS FOR MORE INFORMATION. THE SCOPE OF THIS PROJECT INCLUDES BUT IS NOT LIMITED TO:

1. REPLACE ONE OF THE EXISTING AIR COOLED CHILLERS.
2. REPLACE AHU-1 WHICH IS LOCATED IN THE INDOOR MECHANICAL ROOM. THE INTENT IS TO REPLACE THE AHU IN KIND. THE REPLACEMENT AHU WILL CONNECT TO THE EXISTING DUCTWORK. MODIFY DUCTWORK AS REQUIRED TO ACCOMMODATE THE REPLACEMENT AHU.
3. THE ROOF MOUNTED AIR HANDLERS AND FANS ARE EXISTING TO REMAIN. (SEE PHASE 2 DOCUMENTS)
4. REPLACE EXISTING PUMPS IN THE MECHANICAL ROOM.
5. REPLACE EXISTING PERIMETER FAN COIL UNITS ON THE FIRST AND SECOND FLOOR.
6. ELECTRICAL WORK IS PRIMARILY IN SUPPORT OF THE MECHANICAL WORK. DISCONNECT AND RECONNECT HVAC EQUIPMENT AS SHOWN.

THOMAS E. LOVELL — REGISTERED ENGINEER — AGRICULTURAL — 102769 — STATE OF TENNESSEE
05/04/2026

THE Johnson-McAdams FIRM P.A.
ARCHITECTS/ENGINEERS · PLANNING · SURVEYING · MANAGEMENT
P.O. BOX 510, GREENWOOD, MISSISSIPPI – (662) 455-4540

NO.	DATE	BY	DESCRIPTION

REVISIONS

A-E FIRM	USDA
PROJECT MGR	COR
TEL	E. WILSON
DESIGNER	EPM
JND	E. WILSON
CHECKED BY	SAFETY & HEALTH
BTD	TBD
JOB #	REAL PROPERTY
3925	TBD

USDA Agricultural Research Service

REPAIR HVAC SYSTEM, BULDINGS 1 AND 11 CENTER FOR MEDICAL AGRICULTURAL AND VETENARY ENTOMOLOGY (CMAVE) - GAINESVILLE, FLORIDA

BUILDING 11 - PHASE 1
DRAWING LIST

PROJECT NO. ---	USDA ARS 5601 SUNNYSIDE AVENUE RM 3-2102 BELTVILLE MD 20705	SHEET T-102 2 OF 28
DATE 5/04/2026		

J:\greenwood\2025 Jobs\3925 USDA B1 & B11 HVAC Repair Gainesville FL\07 Working Folder\Title\B11 P1\T-102 P1.dwg
May 04, 2026 - 4:16pm

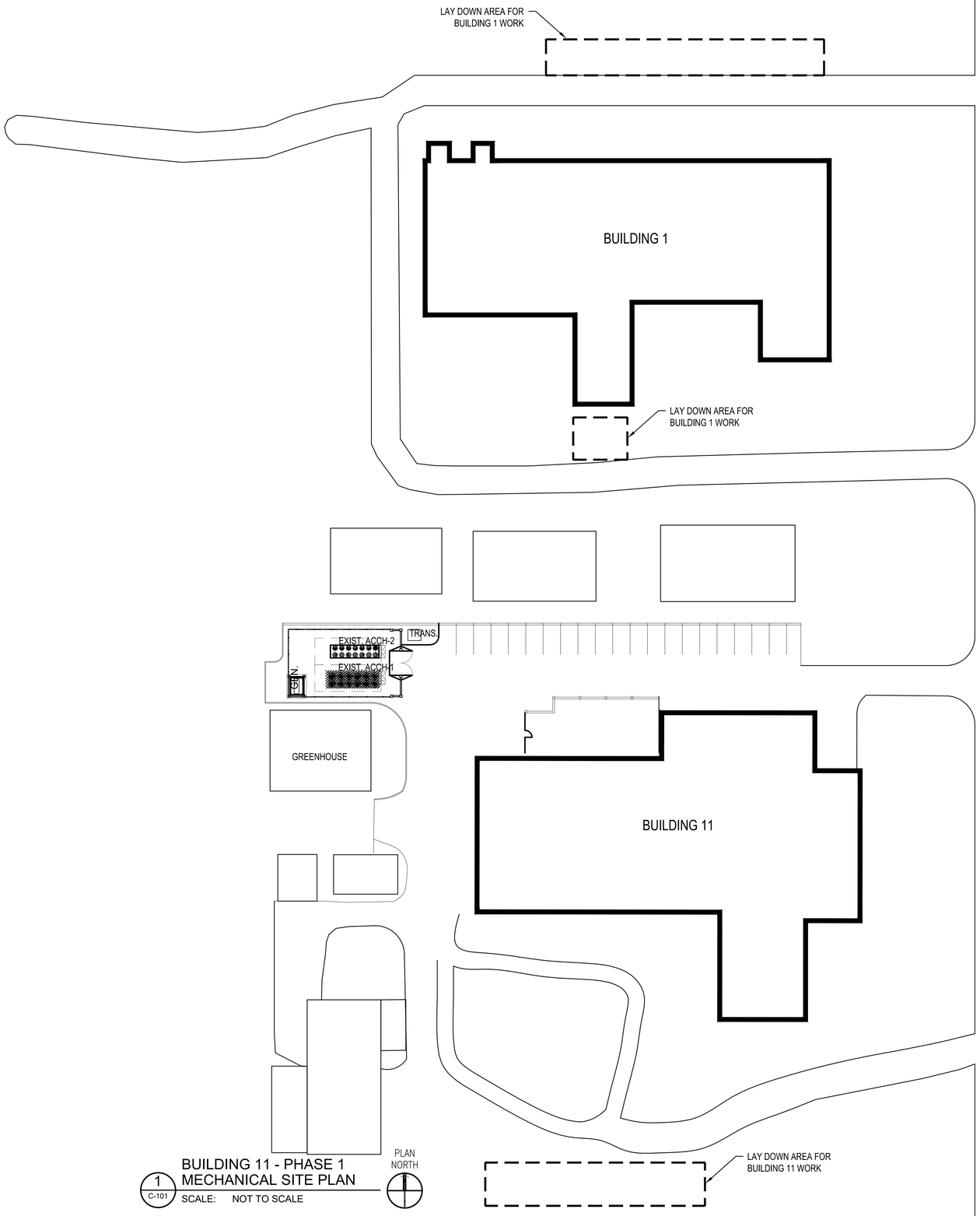

1 C-101 BUILDING 11 - PHASE 1 MECHANICAL SITE PLAN

SCALE: NOT TO SCALE

GENERAL NOTES

1. THIS SHEET PROVIDED TO SHOW GENERAL SITE CONDITIONS AND CONTRACTOR LAY DOWN AREAS. NO CIVIL WORK IS REQUIRED FOR THIS PROJECT.
2. THE LAY DOWN AREAS SHOWN ARE FOR REFERENCE ONLY AND ARE SUBJECT TO CHANGE. COORDINATE LAY DOWN AREAS FOE EACH PHASE OF CONSTRUCTION WITH SITE PERSONNEL AT TIME OF CONSTRUCTION.

THE Johnson-McAdams FIRM P.A.
ARCHITECTS/ENGINEERS PLANNING SURVEYING MANAGEMENT
P.O. BOX 513, GREENWOOD, MISSISSIPPI - (662) 455-4943

NO.	DATE	BY	DESCRIPTION

REVISIONS

A-E FIRM	USDA
PROJECT MGR TEL	COR E. WILSON
DESIGNER JND	EPM E. WILSON
CHECKED BY BTD	SAFETY & HEALTH TBD
JOB # 3925	REAL PROPERTY TBD

USDA Agricultural Research Service

REPAIR HVAC SYSTEM, BULDINGS 1 AND 11 CENTER FOR MEDICAL AGRICULTURAL AND VETENARY ENTOMOLOGY (CMAVE) - GAINESVILLE, FLORIDA

BUILDING 11 - PHASE 1 MECHANICAL SITE PLAN

PROJECT NO. ---

DATE 5/04/2026

USDA ARS
5601 SUNNYSIDE AVENUE
RM 3-2102
BELTVILLE MD 20705

SHEET C-101

3 OF 28

J:\greenwood\2025 Jobs\3925 USDA B1 & B11 HVAC Repair Gainesville FL\07 Working Folder\Civil\B11\C-101 PHASE 1.dwg
May 04, 2026 - 4:33pm

HVAC GENERAL NOTES:

1. THIS PROJECT IS A RENOVATION OF AN EXISTING FACILITY. IT IS THE CONTRACTOR'S RESPONSIBILITY TO FIELD VERIFY ALL DIMENSIONS PRIOR TO FABRICATION OR PROCUREMENT OF EQUIPMENT, MATERIALS, AND ASSEMBLIES. ANY DEVIATIONS MUST BE BROUGHT TO THE CONTRACTING OFFICER'S ATTENTION FOR RESOLUTION BEFORE PROCEEDING WITH ANY CONSTRUCTION, FABRICATION, OR EQUIPMENT PROCUREMENT.
2. INSTALLATION OF HVAC WORK MUST BE COORDINATED WITH OTHER TRADES BEFORE ANY WORK IS STARTED. DUCTWORK AND PIPING SHOWN ON PLANS IS SCHEMATIC. PROVIDE ALL TRANSITIONS, ELBOWS, REDUCERS, ETC. REQUIRED TO AVOID CONFLICTS & MAXIMIZE CEILING HEIGHTS. EQUIPMENT, PIPING OR DUCTWORK INTERFERING WITH OTHER TRADES MUST BE RELOCATED AS REQUIRED AT NO ADDITIONAL COST TO THE OWNER.
3. COORDINATE MECHANICAL AND ELECTRICAL SUCH THAT MECHANICAL PIPING, DUCTWORK AND EQUIPMENT IS NOT LOCATED OVER OR ABOVE ANY ELECTRICAL, COMMUNICATIONS, OR DATA EQUIPMENT.
4. AT START OF CONSTRUCTION, PREPARE TYPED LISTS OF EQUIPMENT THAT ARE SUPPLIED REQUIRING ELECTRICAL WORK, AND SEND LISTS TO THE ELECTRICAL CONTRACTOR FOR REVIEW AND COORDINATION.
5. WRITTEN DIMENSIONS ON DRAWINGS HAVE PRECEDENCE OVER SCALED DIMENSIONS. VERIFY DIMENSIONS ON SITE.
6. EQUIPMENT MUST BE INSTALLED IN ACCORDANCE WITH MANUFACTURER'S APPROVED CLEARANCE, AND INTERNATIONAL BUILDING CODE / INTERNATIONAL MECHANICAL CODE.
7. INSTALLATION OF EQUIPMENT MUST PERMIT ACCESSIBILITY FOR SERVICE AND/OR REPLACEMENT WITHOUT NECESSITATING REMOVAL OR MODIFICATION TO OTHER PIPING, WIRING, OR EQUIPMENT.
8. CEILING-MOUNTED EQUIPMENT MUST BE INSTALLED IN SUCH A MANNER THAT LIGHTS, PIPING, DUCTWORK, ETC. , DO NOT BLOCK ACCESS TO EQUIPMENT AND RELATED ACCESSORIES.
9. SEAL WITH SILICONE ALL GAPS BETWEEN WALL, CEILING, AND FLOOR OPENINGS AND HVAC EQUIPMENT PENETRATIONS. PATCH LARGE GAPS BEFORE SEALANT IS APPLIED.
10. DUCTWORK AIR DISTRIBUTION SYSTEMS MUST BE INSTALLED IN ACCORDANCE WITH SMACNA STANDARDS AND THE PRESSURE CLASSIFICATION OF EACH INDIVIDUAL DUCTWORK SYSTEM.
11. VOLUME DAMPERS MUST BE PROVIDED AT EACH MAIN BRANCH TAKE-OFF, EACH TAKEOFF TO DIFFUSERS/GRILLS/REGISTERS, AND OTHER LOCATIONS WHERE REQUIRED TO PROPERLY BALANCE THE SYSTEM. ALL REQUIRED VOLUME DAMPERS MAY NOT BE SHOWN ON PLANS.
12. INSTRUMENT TEST HOLES MUST BE PROVIDED IN AIR DISTRIBUTION SYSTEMS WHEREVER VOLUME DAMPERS ARE INSTALLED. TEST HOLES MUST BE SEALED WITH RUBBER OR PLASTIC TEST HOLE PLUGS.
13. SQUARE ELBOWS MUST ONLY BE USED WHERE SPACE LIMITATIONS PREVENT USE OF 1-1/2 RADIUS ELBOW AND ONLY UPON APPROVAL OF CONTRACTING OFFICER. PROVIDE TURNING VANES IN ALL SQUARE ELBOWS GREATER THAN OR EQUAL TO 45°. TURNING VANES MUST BE SINGLE THICKNESS TYPE WITHOUT RAILING EDGE. TURNING VANES LONGER THAN 36 INCHES MUST BE DOUBLE THICKNESS TYPE.
14. DUCTWORK RUNOUTS TO AIR DISTRIBUTION DEVICES MUST BE SAME DIAMETER AS AIR DISTRIBUTION DEVICE INLET CONNECTION UNLESS OTHERWISE NOTED ON THE DRAWINGS.
15. FLEXIBLE DUCTWORK RUNOUTS FROM BRANCH DUCTS TO AIR DISTRIBUTION DEVICES MUST NOT EXCEED 5 FEET IN LENGTH. BENDS IN FLEXIBLE DUCTWORK MUST NOT EXCEED A MAXIMUM OF 45 DEGREE CHANGE OF DIRECTION AND MUST BE SUPPORTED SUCH THAT THE BEND RADIUS IS NOT RESTRICTIVE TO AIR FLOW THROUGH THE DUCT. FLEXIBLE DUCTWORK MUST NOT BE CRUSHED OR DISTORTED IN ITS FINAL CONFIGURATION.
16. PROVIDE SHEETMETAL TRANSITIONS AT AIR HANDLING UNITS, HEAT PUMP UNITS, FANS, AND OTHER SIMILAR HVAC EQUIPMENT. TRANSITION TO FULL SIZE OF CONNECTION ON UNIT. FLEXIBLE DUCT CONNECTORS MUST BE USED ON FINAL CONNECTION TO AIR HANDLING EQUIPMENT.
17. TRANSFER DUCTS MUST BE SIZED FOR MAX VELOCITY ALLOWED OF 500 FPM. OPEN-ENDED TRANSFER DUCTS MUST HAVE 90° ELBOW FOR SOUND ATTENUATION.
18. LOUVERED SUPPLY AIR DIFFUSERS MUST BE 4-WAY FLOW UNLESS OTHERWISE SHOWN BY FLOW ARROWS ON THE DRAWINGS. LINEAR DIFFUSERS MUST BE ADJUSTABLE 2-WAY FLOW. PROVIDE BATT INSULATION ON DIFFUSER AND GRILLES THAT ARE EXPOSED TO CEILING PLENUM.
19. EXACT LOCATIONS OF THERMOSTATS, CO2 SENSORS, AND EMCS SENSORS MUST BE COORDINATED WITH FINAL LOCATIONS OF WALL-MOUNTED ARCHITECTURAL AND ELECTRICAL EQUIPMENT. MOUNT THERMOSTATS AND CO2 SENSORS MINIMUM 48" AFF.
20. SPECIFICATIONS TAKE PRECEDENCE OVER DRAWINGS. HOWEVER, ITEMS SHOWN ON DRAWING BUT NOT IN THE SPECIFICATIONS ARE REQUIRED WITHIN THE PROJECT SCOPE. IN ADDITION, SPECIFIC ITEMS SHOWN ON THE DRAWINGS TAKE PRECEDENCE OVER SPECIFICATIONS IN CASES WHERE THE SPECIFICATION HAS OPTIONS.
21. ALL EQUIPMENT MUST BE INSTALLED IN ACCORDANCE WITH MANUFACTURER'S APPROVED PUBLISHED LITERATURE.
22. DUCT SIZES SHOWN ARE INSIDE CLEAR DIMENSIONS.
23. EXPOSED DUCTWORK, WITH THE EXCEPTION OF DUCTWORK IN MECHANICAL ROOMS MUST BE DOUBLE-WALL, DUCTWORK WITH COATING.
24. ALL THERMOSTATS MUST BE WALL MOUNTED AND WIRED.
25. ALL EQUIPMENT INSTALLED IN THIS PROJECT MUST COMPLY WITH THE "BUY AMERICAN ACT" (BAA). BASIS OF DESIGN SHOWN ON SCHEDULES IS TO ESTABLISH A STANDARD OF QUALITY, NOT TO LIMIT COMPETITION. EQUIVALENT EQUIPMENT FROM ANOTHER MANUFACTURER IS ACCEPTABLE. MANUFACTURER NAME AND MODEL NUMBERS ARE BASIS OF DESIGN AND ARE SHOWN FOR INFORMATION ONLY AND MAY OR MAY NOT COMPLY WITH BAA. REFER TO SPECIFICATIONS FOR COMPLETE REQUIREMENTS.
26. CONTROLS CONTRACTOR MUST PROVIDE ALL LOW VOLTAGE DEVICES, CONDUCTORS, AND PATHWAYS IN ACCORDANCE WITH THE REQUIREMENTS OF 26 20 00. INSTALL CONTROL WIRING IN CONDUIT. SEE DIVISION 26 SPECIFICATIONS FOR REQUIREMENTS.
27. ALL WORK AT RISK OF CONTACT WITH LABORATORY CHEMICALS MUST BE PERFORMED IN ACCORDANCE WITH NFPA 45.

HVAC GENERAL DEMOLITION NOTES:

1. THE DEMOLITION PLANS AND EXISTING CONDITIONS SHOWN ARE APPROXIMATE AND ARE TO BE FIELD VERIFIED. ITEMS TO BE REMOVED ARE DENOTED BY HATCHING. ADDITIONAL ITEMS ARE LIKEY TO REQUIRE REMOVAL, RELOCATION AND/OR REINSTALLATION TO PERFORM THE WORK BUT REQUIRE VERIFICATION THRU C.O. BEFORE PERFORMING THE WORK.
2. DEMOLITION MUST INCLUDE, BUT IS NOT LIMITED TO, THE ITEMS IDENTIFIED. THE CONTRACTOR MUST COORDINATE ALL REQUIRED RENOVATION AND NEW CONSTRUCTION WITH THE EXISTING BUILDING TO IDENTIFY THE TOTAL EXTENT OF THE DEMOLITION WORK REQUIRED.
3. THE CONTRACTOR IS RESPONSIBLE FOR THE DEMOLITION AND REMOVAL OF ALL EXISTING BUILDING COMPONENTS, MATERIALS, EQUIPMENT, AND APPURTENANCES AS REQUIRED TO PROVIDE ALL NEW CONSTRUCTION.
4. IN THE EVENT THE CONTRACTOR ENCOUNTERS MATERIAL REASONABLY BELIEVED TO BE ASBESTOS, LEAD-BASED PAINT, OR ANY OTHER HAZARDOUS MATERIAL WHICH HAS NOT BEEN RENDERED HARMLESS, THE CONTRACTOR MUST IMMEDIATELY REPORT THE CONDITION TO THE CONTRACTING OFFICER IN WRITING.
5. THE CONTRACTOR IS RESPONSIBLE FOR THE ERECTION, MAINTENANCE, AND REMOVAL OF ALL CONSTRUCTION ASSISTANCE DEVICES SUCH AS SCAFFOLDING AND BARRIERS.
6. THE BUILDING ENVELOPE MUST REMAIN WATERTIGHT THROUGHOUT THE CONSTRUCTION PROCESS.
7. IF IT BECOMES NECESSARY DURING DEMOLITION TO TEMPORARILY REMOVE ANY EXISTING WORK NOT SPECIFICALLY NOTED TO BE REMOVED OR RELOCATED (THEREBY IMPLYING THAT THEY ARE TO BE LEFT FOR FUTURE USE), THE CONTRACTOR MUST REINSTALL SAID WORK TO FULLY OPERABLE CONDITION IN THEIR ORIGINAL LOCATIONS
8. CONTRACTOR MUST DEMOLISH ALL EQUIPMENT, PIPING, DUCTWORK, INSULATION, SUPPORTS, CONTROLS THERMOSTATS, WIRING AND ALL APPURTENANCES WITH THE HVAC SYSTEM TO BE DEMOLISHED.
9. PROTECT EXISTING INTERIOR WALLS DURING REMOVAL AND CONSTRUCTION. PROVIDE TEMPORARY PROTECTION FROM DUST, NOISE, DAMAGE, ETC. AND CONSTRUCTION BARRIERS AND OTHER SITE PROTECTION REQUIREMENTS CONSISTENT WITH THE SPECIFICATIONS SECTION, AND DIVISION 1, GENERAL REQUIREMENTS.
10. IN AREAS OF WORK, AT EXISTING FINISHES TO REMAIN, PATCH AND REPAIR ANY DAMAGE TO MATCH EXISTING FINISH. PREPARE SURFACE TO RECEIVE NEW FINISHES.
11. FIXED ITEMS ON WALLS AND CEILINGS WILL REMAIN IN PLACE DURING CONSTRUCTION. CONTRACTOR MUST PROVIDE PROTECTION OF EXISTING FIXED ITEMS.
12. ALL WORK AT RISK OF CONTACT WITH LABORATORY CHEMICALS MUST BE PERFORMED IN ACCORDANCE WITH NFPA 45.

THE Johnson-McAdams FIRM P.A.
ARCHITECTS/ENGINEERS - PLANNING - SURVEYING - MANAGEMENT
P.O. BOX 513, GREENWOOD, MS38935/PH. (662) 455-4543

NO.	DATE	BY	DESCRIPTION

REVISIONS

THOMAS E. LOVELACE — REGISTERED ENGINEER — AGRICULTURAL — STATE OF TENNESSEE — 102798 — CONFERRED

A-E FIRM	USDA
PROJECT MGR: TEL	COR: E. WILSON
DESIGNER: JND	EPM: E. WILSON
CHECKED BY: BTD	SAFETY & HEALTH: TBD
JOB #: 3925	REAL PROPERTY: TBD

USDA

USDA Agricultural Research Service

REPAIR HVAC SYSTEM, BULDINGS 1 AND 11 CENTER FOR MEDICAL AGRICULTURAL AND VETENARY ENTOMOLOGY (CMAVE) - GAINESVILLE, FLORIDA

BUILDING 11 - PHASE 1
GENERAL HVAC NOTES

PROJECT NO.		SHEET
----	USDA ARS 5601 SUNNYSIDE AVENUE RM 3-2102 BELTVILLE MD 20705	M-001
DATE: 5/04/2026		4 OF 28

J:\greenwood\2025 Jobs\3925 USDA B1 & B11 HVAC Repair Gainesville FL\07 Working Folder\Mech\B11 P1\M-001-P1.dwg
May 04, 2026 - 4:09pm

ABBREVIATIONS:

@	AT
&	AND
AFF	ABOVE FINISHED FLOOR
AHU	AIR HANDLING UNIT
ARCH	ARCHITECTURAL
AS	AIR SEPARATOR
ASHRAE	AMERICAN SOCIETY OF HEATING, REFRIGERATING, AND AIR CONDITIONING ENGINEERS
ASTM	AMERICAN SOCIETY FOR TESTING AND MATERIALS
APD	AIR PRESSURE DROP
BLDG	BUILDING
BTU, BTUH	BRITISH THERMAL UNITS, BTUs PER HOUR
C	CONDENSATE RECEIVER
CD	CONDENSATE DRAIN
CFM	CUBIC FEET PER MINUTE
CHW	CHILLED WATER
CHWP	CHILLED WATER PUMP
CHWR	CHILLED WATER RETURN
CHWS	CHILLED WATER SUPPLY
CLG	COOLING
CMU	CONCRETE MASONRY UNIT
CO	CLEANOUT
CO2	CARBON DIOXIDE
CONC	CONCRETE
COND	STEAM CONDENSATE
CONN	CONNECT, CONNECTING, CONNECTION
CONT	CONTINUED
CONV	STEAM CONVERTER
COP	COEFFICIENT OF PERFORMANCE
COR	CONTRACTING OFFICER'S (OWNER'S) REPRESENTATIVE
CU	CONDENSING UNIT
D	DEPTH
D	DIFFUSER
DISC	DISCONNECT
DB, Tdb	DRY BULB (TEMPERATURE)
dBA	DECIBELS
DCW	DOMESTIC COLD WATER
DDC	DIRECT DIGITAL CONTROLS
DEG	F (°F) DEGREES FAHRENHEIT
DFCU	DUCTLESS FAN COIL UNIT
DIA, Ø	DIAMETER
DIV	DIVISION
DN	DOWN
DP	DIFFERENTIAL PRESSURE
DWG	DRAWING
DWH	DOMESTIC WATER HEATER
DX	DIRECT EXPANSION
(E)	EXISTING
EA	EXHAUST AIR
EAG	EXHAUST AIR GRILLE
EAT	ENTERING AIR TEMPERATURE
EER	ENERGY EFFICIENCY RATIO
EF	EXHAUST FAN
EFF	EFFICIENCY
ELEC	ELECTRICAL
EMCS	ENERGY MONITORING AND CONTROLS SYSTEM
ER	EXHAUST REGISTER
ERV	ENERGY RECOVERY VENTILATOR
ESP	EXTERNAL STATIC PRESSURE
ET	EXPANSION TANK
ETR	EXISTING TO REMAIN
EUH	ELECTRIC UNIT HEATER
EWT	ENTERING WATER TEMPERATURE
EXIST.	EXISTING
EXT	EXTERIOR
EXH	EXHAUST
DEG	EXISTING
FCU	FAN COIL UNIT
FD	FIRE DAMPER
FFE	FINISHED FLOOR ELEVATION
FLA	FULL LOAD AMPS
FPD	FLUID PRESSURE DROP
FPM	FEET PER MINUTE
FSD	FIRE SMOKE DAMPER
FT	FOOT, FEET
GA	GAUGE
GALV	GALVANIZED
GC	GENERAL CONTRACTOR
GPM	GALLONS PER MINUTE
GRD	GRILLES, REGISTERS AND DIFFUSERS
HP	HORSE POWER
HR	HOUR
HTG	HEATING
HTR	HEATER
HTW	HEATING WATER
HTWR	HEATING WATER RETURN
HTWS	HEATING WATER SUPPLY
HVAC	HEATING, VENTILATING, AND AIR CONDITIONING
HWP	HOT WATER PIPE
HWR	HOT WATER RETURN
HWS	HOT WATER SUPPLY
HZ	HERTZ
IMC	INTERNATIONAL MECHANICAL CODE
IN	INCH, INCHES
IN WC	INCHES WATER COLUMN
IN WG	INCHES WATER GAUGE
IPLV	INTEGRATED PART LOAD VALUE
KW	KILOWATTS
L	LENGTH, LOUVER (WALL)
LAT	LEAVING AIR TEMPERATURE
LBD	LINEAR BAR DIFFUSER
LB	POUNDS
LD	LINEAR DIFFUSER
LPR	LOW PRESSURE RETURN
LPS	LOW PRESSURE SUPPLY
LWT	LEAVING WATER TEMPERATURE
M	MOTORIZED
MA	MIXED AIR
MAX	MAXIMUM
MBH	1000 BRITISH THERMAL UNITS
MCA	MINIMUM CIRCUIT AMPACITY
MECH	MECHANICAL
MER	MECHANICAL EQUIPMENT ROOM
MERV	MINIMUM EFFICIENCY REPORTING VALUE
MIN	MINIMUM
MOCP	MAXIMUM OVER CURRENT PROTECTION
MSS SP	MANUFACTURERS STANDARD SOCIETY STANDARD PRACTICE
MTL	METAL
N.C.	NORMALLY CLOSED
NC	NOISE CRITERIA
NG	NATURAL GAS
NO.	NUMBER
N.O.	NORMALLY OPEN
NTS	NOT TO SCALE
OA	OUTSIDE AIR
PD	PRESSURE DROP
PH	PHASE
PLBG	PLUMBING
PPM	PARTS PER MILLION
PRV	PRESSURE RELIEF VALVE
PSI	POUNDS PER SQUARE INCH
PSIG	POUNDS PER SQUARE INCH GAUGE
QTY	QUANTITY
R/A	RETURN AIR
RAG	RETURN AIR GRILLE
REF	REFER TO, REFERENCE
RF	RADIO FREQUENCY
REQD	REQUIRED
RH	RELATIVE HUMIDITY, ROOF HOOD
RLD	RECTANGULAR LINEAR DIFFUSER
RM	ROOM
RPM	REVOLUTIONS PER MINUTE
RR	RETURN REGISTER
SA	SUPPLY AIR
SAD	SUPPLY AIR DIFFUSER
SAG	SUPPLY AIR GRILLE
SD	SMOKE DAMPER, SMOKE DETECTOR
SEER	SEASONAL ENERGY EFFICIENCY RATIO
SF	SUPPLY FAN
SHT	SHEET
SMACNA	SHEET METAL AND AIR CONDITIONING CONTRACTOR'S NATIONAL ASSOCIATION
SP	STATIC PRESSURE
SS	STAINLESS STEEL
SWR	SIDEWALL REGISTER
T&P	TEMPERATURE AND PRESSURE
TEMP	TEMPERATURE
TSTAT	THERMOSTAT
TYP	TYPICAL
UH	UNIT HEATER
UL	UNDERWRITER'S LABORATORY
UMCS	UTILITY MONITORING AND CONTROL SYSTEM
V	VOLTAGE, VOLTS
VAV	VARIABLE AIR VOLUME
VD	VOLUME DAMPER
VFD	VARIABLE FREQUENCY DRIVE
WG	WATER GAUGE
WB	WET BULB (TEMPERATURE)
WPD	WATER PRESSURE DROP
W/O	WITHOUT

ABBREVIATION NOTES:

1. SOME ABBREVIATIONS SHOWN MAY NOT BE USED FOR THIS PROJECT.
2. SCHEDULED EQUIPMENT IS NOTED USING UNDERLINED TEXT SUCH AS AHU-1. THIS IS NOT AN ABBREVIATION. IT IS AN EQUIPMENT MARK. REFER TO SCHEDULE SHEETS M-601 THRU M-699 FOR INFORMATION REGARDING SCHEDULED EQUIPMENT.

MISCELLANEOUS LEGEND:

- SUPPLY AIR DIFFUSER — FLOW ARROWS INDICATE AIR PATTERN. NO FLOW ARROWS SHOWN INDICATES 4-WAY PATTERN.
- RETURN AIR GRILLE
- EXHAUST AIR GRILLE
- T — THERMOSTAT
- H — HUMIDISTAT
- TH — THERMOSTAT/ HUMIDISTAT
- SD — DUCT SMOKE DETECTOR
- F — FIRESTAT
- T — TEMPERATURE SENSOR
- H — HUMIDITY SENSOR
- SP — STATIC PRESSURE SENSOR
- DP — DIFFERENTIAL PRESSURE SENSOR
- CO — CARBON MONOXIDE SENSOR
- POINT OF RECONNECTION OR EXTENT OF DEMOLITION
- VFD — VARIABLE FREQUENCY DRIVE
- FLOW ARROW

AIR DISTRIBUTION DEVICE TAGS

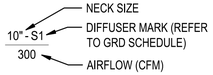

NORTH ARROW

DEMOLITION LEGEND:

HATCHING INDICATES ITEMS TO BE DISMANTLED AND REMOVED.

EXISTING EQUIPMENT

CH-1 (E) — (E) AFTER AN EQUIPMENT MARK INDICATES EXISTING

PIPING LEGEND:

- CHILLED WATER SUPPLY (CHWS)
- CHILLED WATER RETURN (CHWR)
- HEATING WATER SUPPLY (HTWS)
- HEATING WATER RETURN (HTWR)
- ITEMS TO BE DEMOLISHED
- EXISTING PIPING (EXIST.)
- ELBOW UP
- ELBOW DOWN
- RISE OR DROP
- BRANCH BOTTOM CONNECTION
- BRANCH TOP CONNECTION
- TEE OUTLET UP
- TEE OUTLET DOWN
- PIPE CAP
- DIRECTION OF FLOW
- CONCENTRIC REDUCER
- ECCENTRIC REDUCER
- UNION
- PIPE FLANGE
- STRAINER WITH BLOWDOWN VALVE, CAP, AND CHAIN
- GATE VALVE
- BALL VALVE
- FLOW MEASURING/BALANCING/SHUT-OFF VALVE
- CHECK VALVE
- BUTTERFLY VALVE
- PRESSURE REDUCING VALVE
- GLOBE VALVE
- PRESSURE/TEMPERATURE TAP WITH BALL VALVE
- FLOW SWITCH — FS
- PRESSURE SWITCH — PS
- PLUG VALVE
- MANUAL AIR VENT
- AUTOMATIC AIR VENT
- T&P RELIEF VALVE
- PRESSURE GAUGE WITH GAUGE COCK
- THERMOMETER
- FLEXIBLE CONNECTION

DUCTWORK LEGEND:

- 24"Ø — ROUND DUCT. DIAMETER INDICATED IN INCHES.
- 30"x14" — RECTANGULAR DUCT. SIZE INDICATED IN INCHES, FIRST NUMBER IS SIDE SHOWN. DASHED LINES INDICATE ACOUSTICAL LINER
- 90 DEGREE DUCT ELBOW WITH TURNING VANES
- RADIUS DUCT ELBOW - ROUND OR RECTANGULAR (MIN. 1.5 RADIUS UNLESS OTHERWISE NOTED)
- RECTANGULAR DUCT BRANCH TAKE-OFF WITH 45 DEGREE BRANCH INLET
- SQUARE TO ROUND DUCT BRANCH TAKE-OFF WITH 45 DEGREE BRANCH INLET
- ROUND DUCT BRANCH TAKE-OFF FROM RECTANGULAR MAIN WITH CONICAL TAP
- DUCT SIZE TRANSITION
- DUCT SIZE TRANSITION RECTANGULAR TO ROUND
- FLEXIBLE DUCT CONNECTION
- SUPPLY OR OUTSIDE AIR DUCT UP
- SUPPLY OR OUTSIDE AIR DUCT DOWN
- RETURN AIR DUCT UP
- RETURN AIR DUCT DOWN
- EXHAUST AIR DUCT UP
- EXHAUST AIR DUCT DOWN
- IN-LINE 90 DEGREE RISE/DROP IN SUPPLY DUCT
- IN-LINE 90 DEGREE RISE/DROP IN RETURN DUCT
- IN-LINE 90 DEGREE RISE/DROP IN EXHAUST DUCT
- SD — DUCT MOUNTED SMOKE DETECTOR
- VD — VOLUME/BALANCING DAMPER (LABEL MAY BE OMITTED)
- BD — BACKDRAFT DAMPER (COUNTER-BALANCED UNLESS OTHERWISE NOTED)
- M — DAMPER TYPE: M - MOTORIZED DAMPER (ELECTRIC)
- FD — FIRE DAMPER
- SD — SMOKE DAMPER
- FSD — COMBINATION FIRE/SMOKE DAMPER

NO.	DATE	BY	DESCRIPTION
			REVISIONS

THE Johnson–McAdams FIRM
ARCHITECTS/ENGINEERS · PLANNING · SURVEYING · MANAGEMENT
P.O. BOX 151, GREENWOOD, MISSISSIPPI – (662) 455-4545

A–E FIRM	USDA
PROJECT MGR	COR
TEL	E. WILSON
DESIGNER	EPM
JND	E. WILSON
CHECKED BY	SAFETY & HEALTH
BTD	TBD
JOB #	REAL PROPERTY
3925	TBD

USDA Agricultural Research Service

REPAIR HVAC SYSTEM, BULDINGS 1 AND 11 CENTER FOR MEDICAL AGRICULTURAL AND VETENARY ENTOMOLOGY (CMAVE) - GAINESVILLE, FLORIDA

BUILDING 11 - PHASE 1
HVAC SYMBOL LEGEND

PROJECT NO.	USDA ARS 5601 SUNNYSIDE AVENUE RM 3-2102 BELTVILLE MD 20705	SHEET M-002
---		5 OF 28
DATE		
5/04/2026		

THOMAS E. LOVEJOY — REGISTERED ENGINEER — AGRICULTURAL ENGINEER — 102790 — STATE OF TENNESSEE

J:\greenwood\2025 Jobs\3925 USDA B1 & B11 HVAC Repair Gainesville FL\07 Working Folder\Mech\B11 P1\M-002-P1.dwg
May 04, 2026 - 4:09pm

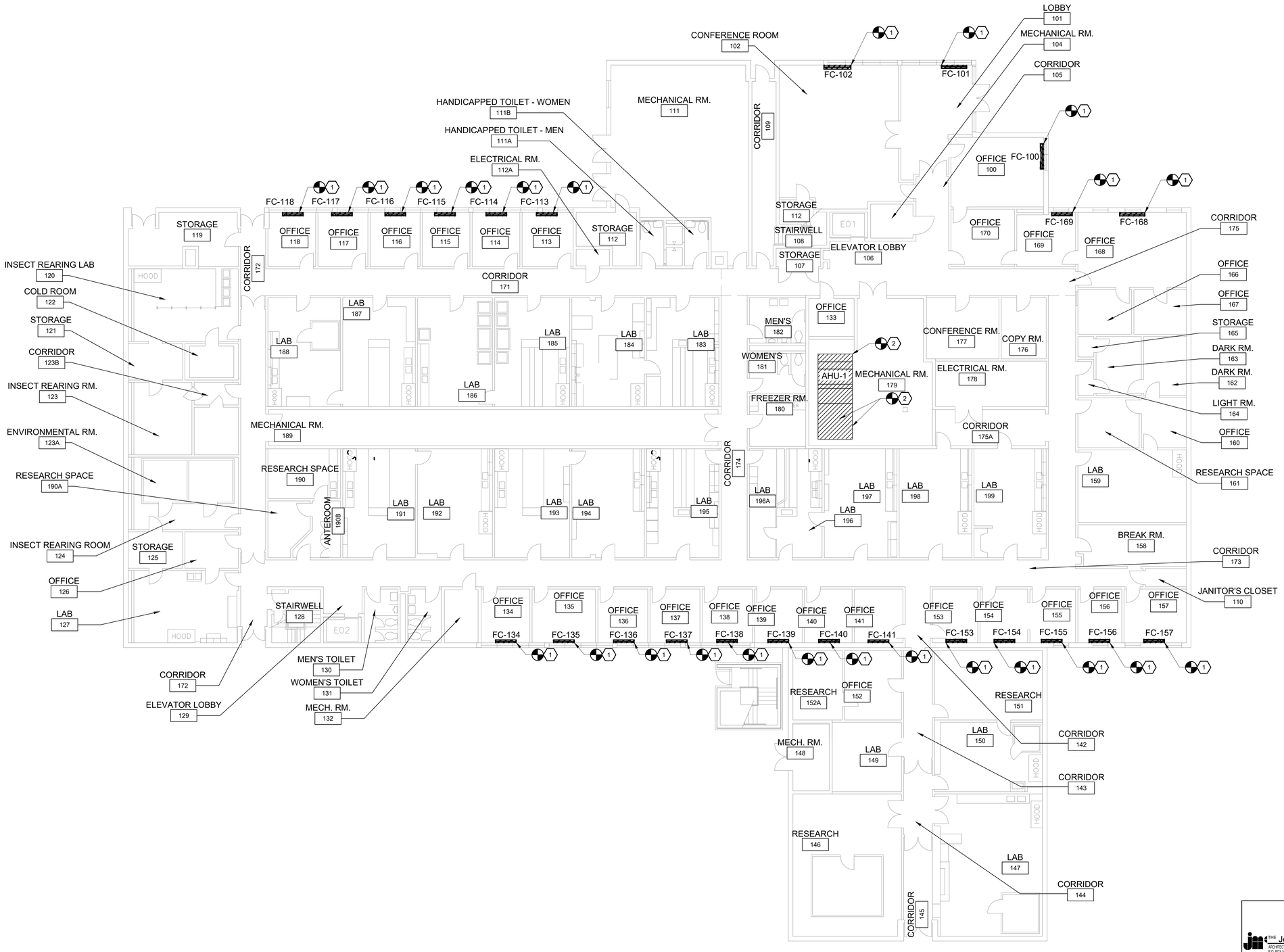

1 MD101 BUILDING 11 - PHASE 1
FIRST FLOOR HVAC DEMO
SCALE: 3/32" = 1'-0"

PLAN NORTH

GENERAL NOTES

A. THE DEMOLITION PLAN AND EXISTING CONDITIONS ARE APPROXIMATE. ITEMS TO BE REMOVED ARE DESIGNATED BY HATCHING AND DASHED LINES. OTHER ITEMS ARE INTENDED TO REMAIN IN PLACE UNLESS NOTED OTHERWISE.
B. CONTRACTOR MUST PROTECT ALL EXISTING HVAC EQUIPMENT, DUCTWORK, DIFFUSERS, PIPING, VALVES, CONTROLS, INSULATION, ETC. FROM ANY DAMAGE OR CONTAMINATION. OPEN ENDS OF ALL DUCTWORK MUST BE COVERED DURING CONSTRUCTION.
C. ALL VAV BOXES AS WELL AS GENERAL EXHAUST, HOOD EXHAUST, AND MAKE UP AIR VALVES ARE EXISTING TO REMAIN.
D. THE SPECIFIC WORK REQUIRED FOR THIS PHASE IS LISTED IN THE KEYED NOTES BELOW. NO DEMOLITION WORK IS TO BE PERFORMED ON ANY EQUIPMENT DUCTWORK, PIPING, ETC. NOT SPECIFICALLY LISTED IN THE KEYED NOTES.

(X) KEYED NOTES

1. DISMANTLE AND REMOVE EXISTING FAN COIL UNIT AND ALL APPURTENANCES. ALL EXISTING DUCTWORK (WHERE APPLICABLE), CHILLED WATER, AND HEATING WATER PIPING, INSULATION, AND VALVES MUST BE CAPPED AND REMAIN IN PLACE FOR RECONNECTION.
2. DISMANTLE AND REMOVE EXISTING AIR HANDLING UNIT AND ALL APPURTENANCES. ALL EXISTING DUCTWORK, CHILLED WATER, AND HEATING WATER PIPING, INSULATION, AND VALVES MUST BE CAPPED AND REMAIN IN PLACE FOR RECONNECTION.

LEGEND

POINT OF DEMOLITION

EQUIPMENT TO BE DEMOLISHED

GRAPHIC SCALE

10' 0 5' 10'
SCALE: 3/32"= 1'-0"

THE Johnson-McAdams FIRM P.A.
ARCHITECTS/ENGINEERS - PLANNING - SURVEYING - MANAGEMENT
P.O. BOX 513, GREENWOOD, MISSISSIPPI - (662) 453-6943

NO.	DATE	BY	DESCRIPTION

REVISIONS

A-E FIRM	USDA
PROJECT MGR: TEL	COR: E. WILSON
DESIGNER: DKM	EPM: E. WILSON
CHECKED BY: BTD	SAFETY & HEALTH: TBD
JOB #: 3925	REAL PROPERTY: TBD

USDA Agricultural Research Service

REPAIR HVAC SYSTEM, BULDINGS 1 AND 11 CENTER FOR MEDICAL AGRICULTURAL AND VETENARY ENTOMOLOGY (CMAVE) - GAINESVILLE, FLORIDA
BUILDING 11 - PHASE 1
FIRST FLOOR HVAC DEMO

PROJECT NO.	USDA ARS 5601 SUNNYSIDE AVENUE RM 3-2102 BELTVILLE MD 20705	SHEET
---		MD101
DATE: 5/04/2026		6 OF 28

THOMAS E. LOVELACE REGISTERED ENGINEER AGRICULTURAL ENGINEERING No. 102789 STATE OF TENNESSEE

J:\greenwood\2025 Jobs\3925 USDA B1 & B11 HVAC Repair Gainesville FL\07 Working Folder\Mech\B11 P1\MD101-P1.dwg
May 04, 2026 - 4:09pm

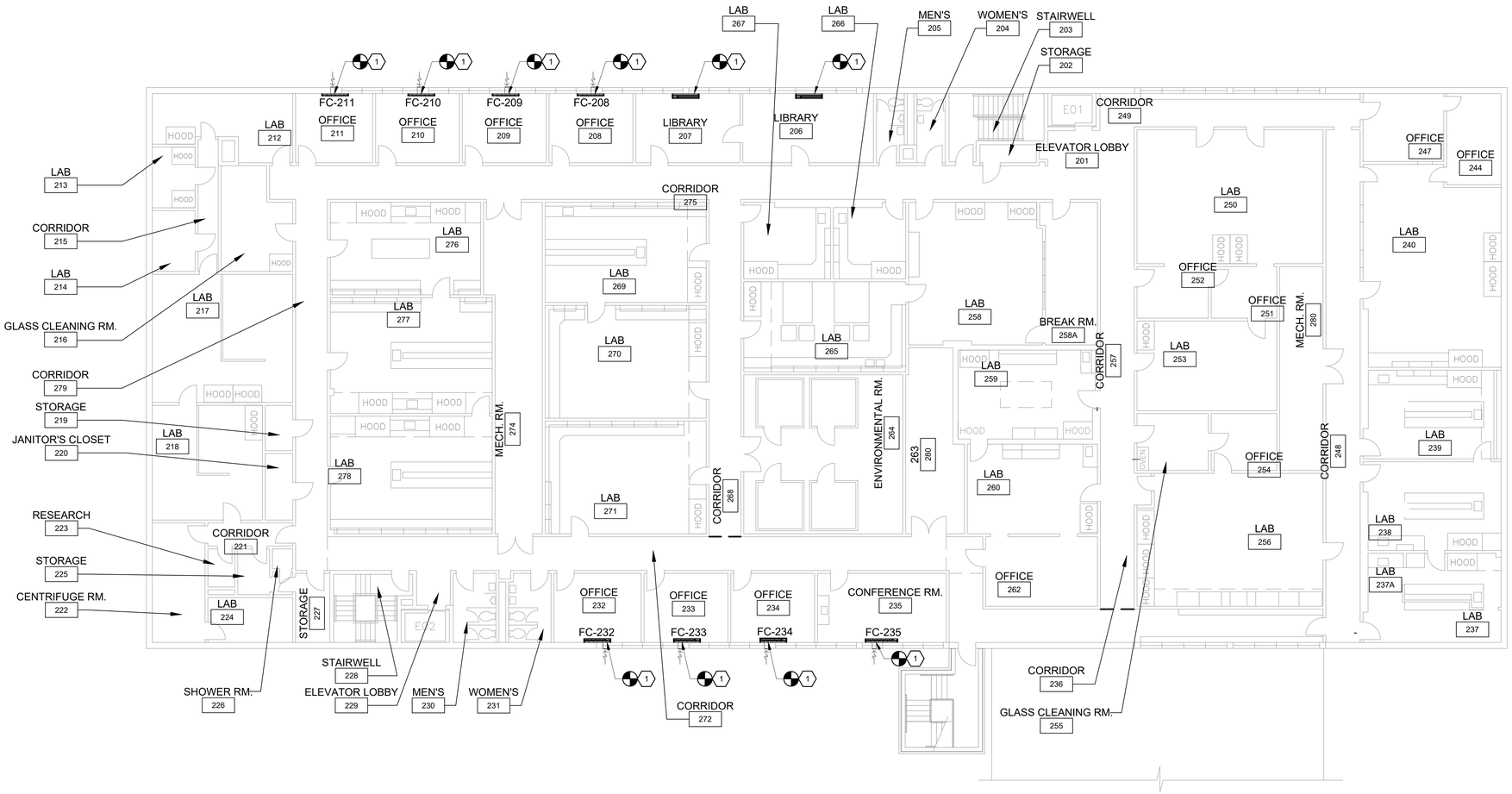

GENERAL NOTES

A. THE DEMOLITION PLAN AND EXISTING CONDITIONS ARE APPROXIMATE. ITEMS TO BE REMOVED ARE DESIGNATED BY HATCHING AND DASHED LINES. OTHER ITEMS ARE INTENDED TO REMAIN IN PLACE UNLESS NOTED OTHERWISE.

B. CONTRACTOR MUST PROTECT ALL EXISTING HVAC EQUIPMENT, DUCTWORK, DIFFUSERS, PIPING, VALVES, CONTROLS, INSULATION, ETC. FROM ANY DAMAGE OR CONTAMINATION. OPEN ENDS OF ALL DUCTWORK MUST BE COVERED DURING CONSTRUCTION.

C. ALL VAV BOXES AS WELL AS GENERAL EXHAUST, HOOD EXHAUST, AND MAKE UP AIR VALVES ARE EXISTING TO REMAIN

D. THE SPECIFIC WORK REQUIRED FOR THIS PHASE IS LISTED IN THE KEYED NOTES BELOW. NO DEMOLITION WORK IS TO BE PERFORMED ON ANY EQUIPMENT DUCTWORK, PIPING, ETC. NOT SPECIFICALLY LISTED IN THE KEYED NOTES.

KEYED NOTES

1. DISMANTLE AND REMOVE EXISTING FAN COIL UNIT AND ALL APPURTENANCES. ALL EXISTING DUCTWORK (WHERE APPLICABLE), CHILLED WATER, AND HEATING WATER PIPING, INSULATION, AND VALVES MUST BE CAPPED AND REMAIN IN PLACE FOR RECONNECTION.

LEGEND

- POINT OF DEMOLITION
- EQUIPMENT TO BE DEMOLISHED

GRAPHIC SCALE

6' 0 3' 6'

SCALE: 3/16" = 1'-0"

1 MD102 BUILDING 11 - PHASE 1 SECOND FLOOR HVAC DEMO

SCALE: 3/32" = 1'-0"

PLAN NORTH

J:\greenwood\2025 Jobs\3925 USDA B1 & B11 HVAC Repair Gainesville FL\07 Working Folder\Mech\B11 P1\MD102-P1.dwg
May 04, 2026 - 4:09pm

THE Johnson-McAdams FIRM P.A.
ARCHITECTS/ENGINEERS · PLANNING · SURVEYING · MANAGEMENT
P.O. BOX 513, GREENWOOD, MISSISSIPPI • (662) 455-6943

NO.	DATE	BY	DESCRIPTION
			REVISIONS

A-E FIRM	USDA
PROJECT MGR TEL	COR E. WILSON
DESIGNER DKM	EPM E. WILSON
CHECKED BY BTD	SAFETY & HEALTH TBD
JOB # 3925	REAL PROPERTY TBD

USDA Agricultural Research Service

REPAIR HVAC SYSTEM, BULDINGS 1 AND 11 CENTER FOR MEDICAL AGRICULTURAL AND VETENARY ENTOMOLOGY (CMAVE) - GAINESVILLE, FLORIDA

BUILDING 11 - PHASE 1
SECOND FLOOR HVAC DEMO

PROJECT NO.	USDA ARS 5601 SUNNYSIDE AVENUE RM 3-2102 BELTVILLE MD 20705	SHEET
---		MD102
DATE 5/04/2026		7 OF 28

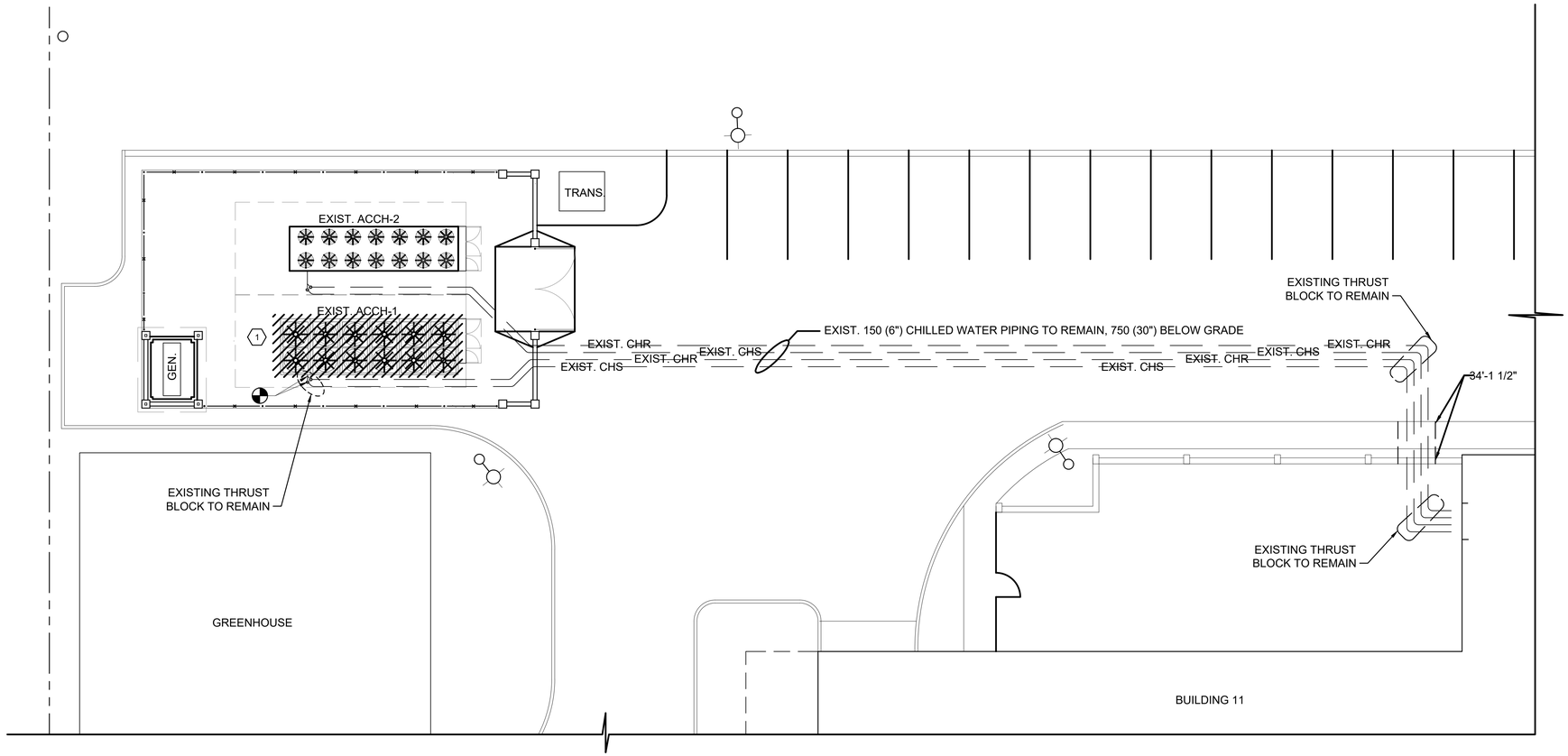

GENERAL NOTES

A. THE DEMOLITION PLAN AND EXISTING CONDITIONS ARE APPROXIMATE. ITEMS TO BE REMOVED ARE DESIGNATED BY HATCHING AND DASHED LINES. OTHER ITEMS ARE INTENDED TO REMAIN IN PLACE UNLESS NOTED OTHERWISE.

B. CONTRACTOR MUST PROTECT ALL EXISTING HVAC EQUIPMENT, PIPING, VALVES, INSULATION, CONTROLS, ETC. FROM ANY DAMAGE OR CONTAMINATION.

C. THE SPECIFIC WORK REQUIRED FOR THIS PHASE IS LISTED IN THE KEYED NOTES BELOW. NO DEMOLITION WORK IS TO BE PERFORMED ON ANY EQUIPMENT DUCTWORK, PIPING, ETC. NOT SPECIFICALLY LISTED IN THE KEYED NOTES.

KEYED NOTES

1. DISMANTLE AND REMOVE EXISTING AIR COOLED CHILLER. PREPARE EXISTING PIPING FOR CONNECTION TO NEW CHILLER. EXISTING CONCRETE PAD TO REMAIN.

LEGEND

POINT OF DEMOLITION

EQUIPMENT TO BE DEMOLISHED

GRAPHIC SCALE

10' 0 5' 10'

SCALE: 3/32"= 1'-0'

1 MD103 BUILDING 11
EXISTING MECHANICAL SITE PLAN DEMO
SCALE: 3/32" = 1'-0"

PLAN NORTH

THE Johnson-McAdams FIRM P.A.
ARCHITECTS/ENGINEERS · PLANNING · SURVEYING · MANAGEMENT
P.O. BOX 513, GREENWOOD, MISSISSIPPI - (662) 455-6943

NO.	DATE	BY	DESCRIPTION

REVISIONS

A-E FIRM	USDA
PROJECT MGR TEL	COR E. WILSON
DESIGNER DKM	EPM E. WILSON
CHECKED BY BTD	SAFETY & HEALTH TBD
JOB # 3925	REAL PROPERTY TBD

USDA Agricultural Research Service

REPAIR HVAC SYSTEM, BULDINGS 1 AND 11 CENTER FOR MEDICAL AGRICULTURAL AND VETENARY ENTOMOLOGY (CMAVE) - GAINESVILLE, FLORIDA

BUILDING 11 - PHASE 1
EXISTING MECHANICAL SITE PLAN DEMO

PROJECT NO. ---

DATE 5/04/2026

USDA ARS
5601 SUNNYSIDE AVENUE
RM 3-2102
BELTVILLE MD 20705

SHEET MD103
8 OF 28

C:\Users\TOMLOV~1\AppData\Local\Temp\AcPublish_88148\MD103-P1.dwg
May 04, 2026 - 4:09pm

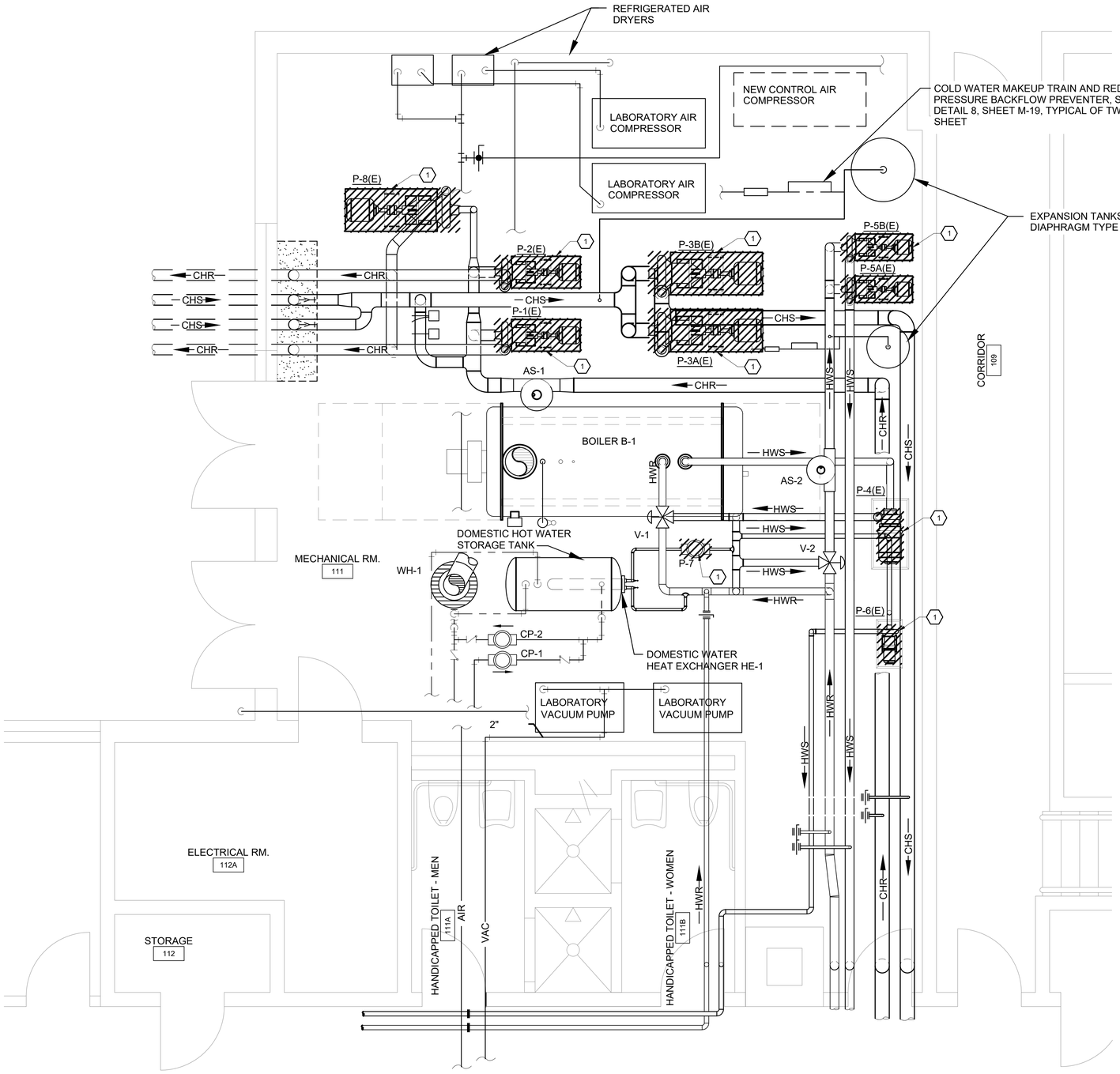

1 MD401 BUILDING 11 - PHASE 1
ENLARGED MECHANICAL ROOM DEMO
SCALE: 3/8" = 1'-0"

PLAN NORTH

GENERAL NOTES

A. THE DEMOLITION PLAN AND EXISTING CONDITIONS ARE APPROXIMATE. ITEMS TO BE REMOVED ARE DESIGNATED BY HATCHING AND DASHED LINES. OTHER ITEMS ARE INTENDED TO REMAIN IN PLACE UNLESS NOTED OTHERWISE.

B. CONTRACTOR MUST PROTECT ALL EXISTING HVAC EQUIPMENT, DUCTWORK, DIFFUSERS, PIPING, VALVES, CONTROLS, INSULATION, ETC. FROM ANY DAMAGE OR CONTAMINATION. OPEN ENDS OF ALL DUCTWORK MUST BE COVERED DURING CONSTRUCTION.

C. THE SPECIFIC WORK REQUIRED FOR THIS PHASE IS LISTED IN THE KEYED NOTES BELOW. NO DEMOLITION WORK IS TO BE PERFORMED ON ANY EQUIPMENT DUCTWORK, PIPING, ETC. NOT SPECIFICALLY LISTED IN THE KEYED NOTES.

KEYED NOTES

1. DISMANTLE AND REMOVE EXISTING PUMP AND ALL APPURTENANCES. ALL EXISTING PIPING, INSULATION, AND VALVES MUST BE CAPPED AND REMAIN IN PLACE FOR RECONNECTION. EXISTING CONCRETE PAD (IF APPLICABLE) MUST REMAIN.

LEGEND

POINT OF DEMOLITION

EQUIPMENT TO BE DEMOLISHED

GRAPHIC SCALE

32" 0 16" 32"

SCALE: 3/8"= 1'-0'

THE Johnson-McAdams FIRM P.A.
ARCHITECTS/ENGINEERS - PLANNING - SURVEYING - MANAGEMENT
P.O. BOX 513, GREENWOOD, MISSISSIPPI - (662) 455-4943

NO.	DATE	BY	DESCRIPTION

REVISIONS

A-E FIRM	USDA
PROJECT MGR TEL	COR E. WILSON
DESIGNER JND	EPM E. WILSON
CHECKED BY BTD	SAFETY & HEALTH TBD
JOB # 3925	REAL PROPERTY TBD

USDA Agricultural Research Service

REPAIR HVAC SYSTEM, BULDINGS 1 AND 11 CENTER FOR MEDICAL AGRICULTURAL AND VETENARY ENTOMOLOGY (CMAVE) - GAINESVILLE, FLORIDA

BUILDING 11 - PHASE 1
ENLARGED MECHANICAL ROOM DEMO

PROJECT NO. ---

DATE 5/04/2026

USDA ARS
5601 SUNNYSIDE AVENUE
RM 3-2102
BELTVILLE MD 20705

SHEET MD401
9 OF 28

C:\Users\TOMLOV~1\AppData\Local\Temp\AcPublish_88148\MD401.dwg
May 04, 2026 - 4:09pm

GENERAL NOTES

A. CONTRACTOR MUST PROTECT ALL EXISTING HVAC EQUIPMENT, DUCTWORK, DIFFUSERS,PIPING, VALVES, CONTROLS, INSULATION, ETC. FROM ANY DAMAGE OR CONTAMINATION. OPEN ENDS OF ALL DUCTWORK (EXISTING AND NEW) MUST BE COVERED DURING CONSTRUCTION. CONTRACTOR MUST MECHANICALLY CLEAN ENTIRE HVAC SYSTEM IN WORK AREA TO REMOVE ALL VISIBLE CONTAMINANTS, SUCH THAT SYSTEMS ARE CAPABLE OF PASSING NADCA CLEANING VERIFICATION TESTING STANDARDS ONCE CONSTRUCTION IS COMPLETE.

B. HVAC SYSTEMS AND EQUIPMENT SHOWN ON THIS DRAWING ARE APPROXIMATE. CONTRACTOR SHALL FIELD VERIFY ALL EXISTING CONDITIONS.

C. CONTRACTOR MUST BALANCE THE AIRFLOW OF THE DIFFUSERS AND GRILLES TO THE VALUES SHOWN ON THE DRAWINGS. CONTRACTOR MUST BALANCE VAV BOXES, DAMPERS, AIR HANDLING UNIT, AND ALL OTHER EQUIPMENT IMPACTED BY DIFFUSER AND GRILLE BALANCING.

D. ALL VAV BOXES AS WELL AS GENERAL EXHAUST, HOOD EXHAUST, AND MAKE UP AIR VALVES ARE EXISTING TO BE ADJUSTED FOR AIR BALANCING.

E. THE SPECIFIC WORK REQUIRED FOR THIS PHASE IS LISTED IN THE KEYED NOTES BELOW. ANY EQUIPMENT, DUCTWORK, PIPING, ETC. NOT SPECIFICALLY LISTED IN THE KEYED NOTES IS EXISTING.

(X) KEYED NOTES

1. PROVIDE FAN COIL UNIT AND ALL APPURTENANCES IN PLACE OF EXISTING. RECONNECT TO ALL EXISTING CAPPED DUCTWORK (WHERE APPLICABLE), CHILLED WATER, AND HEATING WATER PIPING.
2. PROVIDE AIR HANDLING UNIT AND ALL APPURTENANCES IN PLACE. RECONNECT TO ALL EXISTING CAPPED DUCTWORK, CHILLED WATER, AND HEATING WATER PIPING. MODIFY/REPLACE EXISTING EQUIPMENT PAD AS NEEDED FOR AIR HANDLER REPLACEMENT.

LEGEND

POINT OF CONNECTION

GRAPHIC SCALE

10' 0 5' 10'

SCALE: 3/32"= 1'-0'

1 M-101 BUILDING 11 FIRST FLOOR HVAC

SCALE: 3/32" = 1'-0"

PLAN NORTH

THE Johnson-McAdams FIRM P.A.
ARCHITECTS/ENGINEERS - PLANNING - SURVEYING - MANAGEMENT
P.O. BOX 513, GREENWOOD, MISSISSIPPI - (662) 453-6362

NO.	DATE	BY	DESCRIPTION

REVISIONS

A-E FIRM	USDA
PROJECT MGR TEL	COR E. WILSON
DESIGNER DKM	EPM E. WILSON
CHECKED BY BTD	SAFETY & HEALTH TBD
JOB # 3925	REAL PROPERTY TBD

USDA Agricultural Research Service

REPAIR HVAC SYSTEM, BUILDINGS 1 AND 11 CENTER FOR MEDICAL AGRICULTURAL AND VETENARY ENTOMOLOGY (CMAVE) - GAINESVILLE, FLORIDA

BUILDING 11 - PHASE 1
FIRST FLOOR HVAC

PROJECT NO. ---

DATE 5/04/2026

USDA ARS
5601 SUNNYSIDE AVENUE
RM 3-2102
BELTVILLE MD 20705

SHEET M-101
10 OF 28

THOMAS E. LOVE LACY — REGISTERED ENGINEER — AGRICULTURAL — COMMERCE — 102759 — STATE OF TENNESSEE

J:\greenwood\2025 Jobs\3925 USDA B1 & B11 HVAC Repair Gainesville FL\07 Working Folder\Mech\B11 P1\M101-P1.dwg
May 04, 2026 - 4:09pm

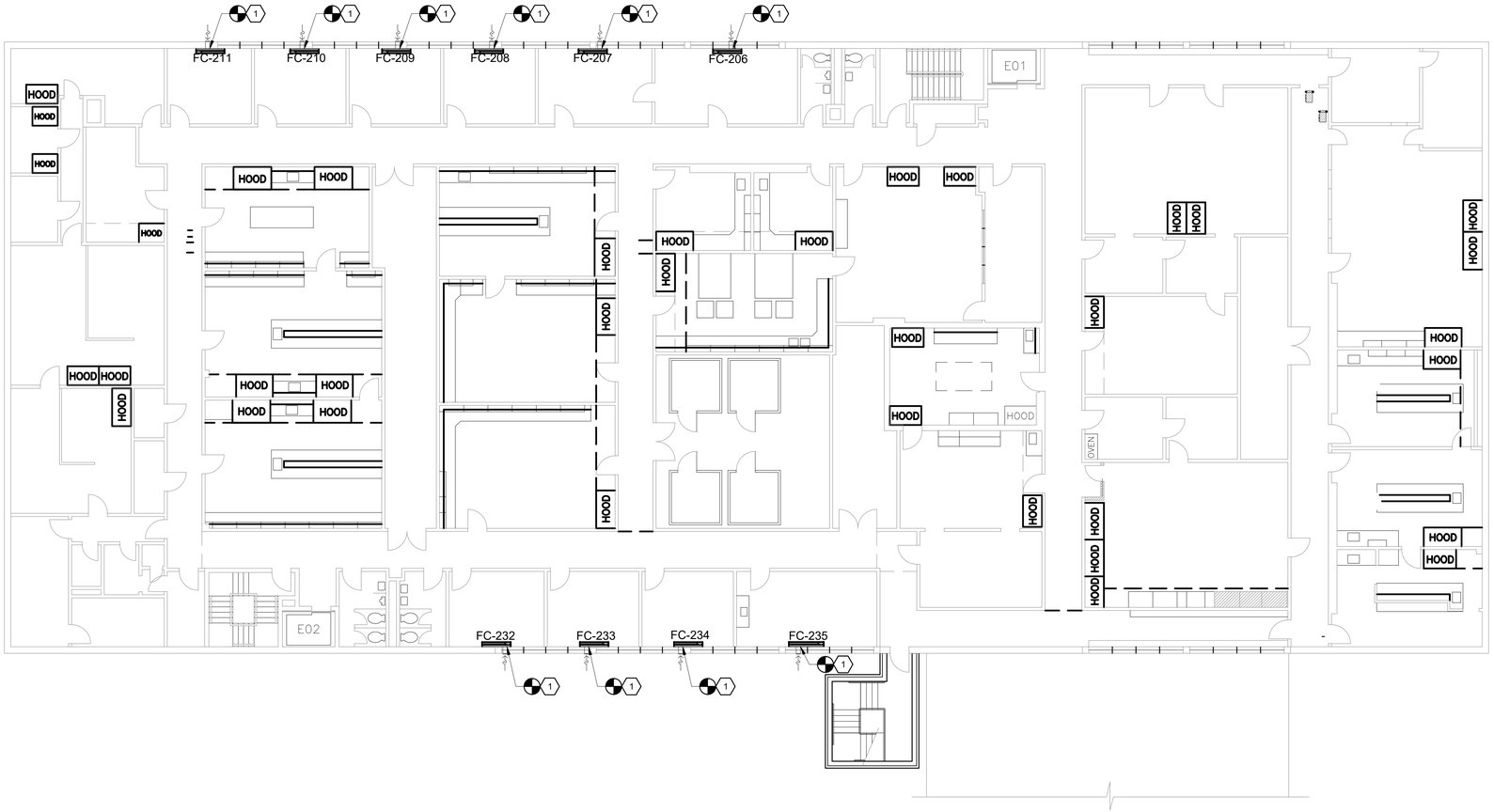

GENERAL NOTES

A. CONTRACTOR MUST PROTECT ALL EXISTING HVAC EQUIPMENT, DUCTWORK, DIFFUSERS,PIPING, VALVES, CONTROLS, INSULATION, ETC. FROM ANY DAMAGE OR CONTAMINATION. OPEN ENDS OF ALL DUCTWORK (EXISTING AND NEW) MUST BE COVERED DURING CONSTRUCTION. CONTRACTOR MUST MECHANICALLY CLEAN ENTIRE HVAC SYSTEM IN WORK AREA TO REMOVE ALL VISIBLE CONTAMINANTS, SUCH THAT SYSTEMS ARE CAPABLE OF PASSING NADCA CLEANING VERIFICATION TESTING STANDARDS ONCE CONSTRUCTION IS COMPLETE.

B. HVAC SYSTEMS AND EQUIPMENT SHOWN ON THIS DRAWING ARE APPROXIMATE. CONTRACTOR SHALL FIELD VERIFY ALL EXISTING CONDITIONS.

C. CONTRACTOR MUST BALANCE THE AIRFLOW OF THE DIFFUSERS AND GRILLES TO THE VALUES SHOWN ON THE DRAWINGS. CONTRACTOR MUST BALANCE VAV BOXES, DAMPERS, AIR HANDLING UNIT, AND ALL OTHER EQUIPMENT IMPACTED BY DIFFUSER AND GRILLE BALANCING.

D. ALL VAV BOXES AS WELL AS GENERAL EXHAUST, HOOD EXHAUST, AND MAKE UP AIR VALVES ARE EXISTING TO BE ADJUSTED FOR AIR BALANCING.

E. THE SPECIFIC WORK REQUIRED FOR THIS PHASE IS LISTED IN THE KEYED NOTES BELOW. ANY EQUIPMENT, DUCTWORK, PIPING, ETC. NOT SPECIFICALLY LISTED IN THE KEYED NOTES IS EXISTING.

(X) KEYED NOTES

1. PROVIDE FAN COIL UNIT AND ALL APPURTENANCES IN PLACE OF EXISTING. RECONNECT TO ALL EXISTING CAPPED DUCTWORK (WHERE APPLICABLE), CHILLED WATER, AND HEATING WATER PIPING.

LEGEND

POINT OF CONNECTION

GRAPHIC SCALE

10' 0 5' 10'

SCALE: 3/32"= 1'-0'

1 M-102 BUILDING 11 SECOND FLOOR HVAC

SCALE: 3/32" = 1'-0"

PLAN NORTH

THE Johnson-McAdams FIRM P.A.
ARCHITECTS/ENGINEERS - PLANNING - SURVEYING - MANAGEMENT
P.O. BOX 513, GREENWOOD, MISSISSIPPI - (662) 455-4543

NO.	DATE	BY	DESCRIPTION

REVISIONS

A-E FIRM	USDA
PROJECT MGR	TEL
COR	E. WILSON
DESIGNER	DKM
EPM	E. WILSON
CHECKED BY	BTD
SAFETY & HEALTH	TBD
JOB #	3925
REAL PROPERTY	TBD

USDA Agricultural Research Service

REPAIR HVAC SYSTEM, BUILDINGS 1 AND 11 CENTER FOR MEDICAL AGRICULTURAL AND VETENARY ENTOMOLOGY (CMAVE) - GAINESVILLE, FLORIDA

BUILDING 11 - PHASE 1
SECOND FLOOR HVAC

PROJECT NO. ----	USDA ARS 5601 SUNNYSIDE AVENUE RM 3-2102 BELTVILLE MD 20705	SHEET M-102 11 OF 28
DATE 5/04/2026		

THOMAS E. LOVELACE REGISTERED ENGINEER AGRICULTURE STATE OF TENNESSEE 102768

J:\greenwood\2025 Jobs\3925 USDA B1 & B11 HVAC Repair Gainesville FL\07 Working Folder\Mech\B11 P1\M102-P1.dwg
May 04, 2026 - 4:09pm

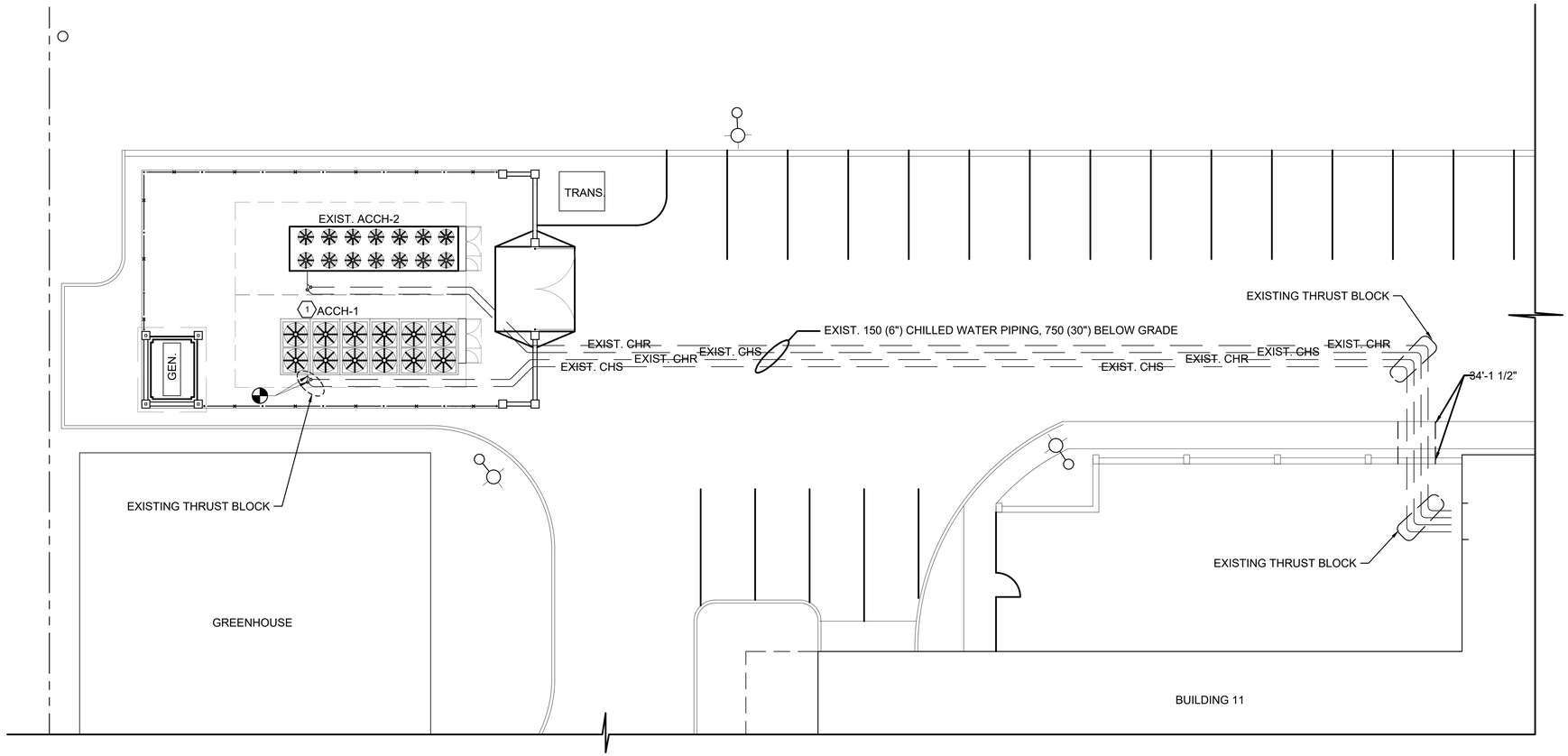

1 M-103 BUILDING 11 MECHANICAL SITE PLAN

SCALE: 3/32" = 1'-0"

PLAN NORTH

GENERAL NOTES

A. CONTRACTOR MUST PROTECT ALL EXISTING HVAC EQUIPMENT, PIPING, VALVES, CONTROLS, INSULATION, ETC. FROM ANY DAMAGE OR CONTAMINATION.
B. HVAC SYSTEMS AND EQUIPMENT SHOWN ON THIS DRAWING ARE APPROXIMATE. CONTRACTOR SHALL FIELD VERIFY ALL EXISTING CONDITIONS.
C. THE SPECIFIC WORK REQUIRED FOR THIS PHASE IS LISTED IN THE KEYED NOTES BELOW. ANY EQUIPMENT, DUCTWORK, PIPING, ETC. NOT SPECIFICALLY LISTED IN THE KEYED NOTES IS EXISTING.

(X) KEYED NOTES

1. PROVIDE AIR COOLED CHILLER AND ALL APPURTENANCES ON EXISTING EQUIPMENT PAD. RECONNECT TO EXISTING PIPING AND CONTROLS TO ALLOW FOR A FULLY FUNCTIONING CHILLED WATER SYSTEM.

LEGEND

POINT OF CONNECTION

GRAPHIC SCALE

10' 0 5' 10'
SCALE: 3/32" = 1'-0"

THE Johnson-McAdams FIRM P.A.
ARCHITECTS/ENGINEERS · PLANNING · SURVEYING · MANAGEMENT
P.O. BOX 513, GREENWOOD, MISSISSIPPI • (662) 455-6643

NO.	DATE	BY	DESCRIPTION

REVISIONS

A-E FIRM	USDA
PROJECT MGR: TEL	COR: E. WILSON
DESIGNER: DKM	EPM: E. WILSON
CHECKED BY: BTD	SAFETY & HEALTH: TBD
JOB #: 3925	REAL PROPERTY: TBD

THOMAS E. LOVELACE REGISTERED ENGINEER AGRICULTURAL STATE OF TENNESSEE 102758

USDA Agricultural Research Service

REPAIR HVAC SYSTEM, BULDINGS 1 AND 11 CENTER FOR MEDICAL AGRICULTURAL AND VETENARY ENTOMOLOGY (CMAVE) - GAINESVILLE, FLORIDA

BUILDING 11 - PHASE 1
MECHANICAL SITE PLAN

PROJECT NO.	USDA ARS 5601 SUNNYSIDE AVENUE RM 3-2102 BELTVILLE MD 20705	SHEET
--- DATE 5/04/2026		M-103 12 OF 28

J:\greenwood\2025 Jobs\3925 USDA B1 & B11 HVAC Repair Gainesville FL\07 Working Folder\Mech\B11 P1\M103-P1.dwg
May 04, 2026 - 4:09pm

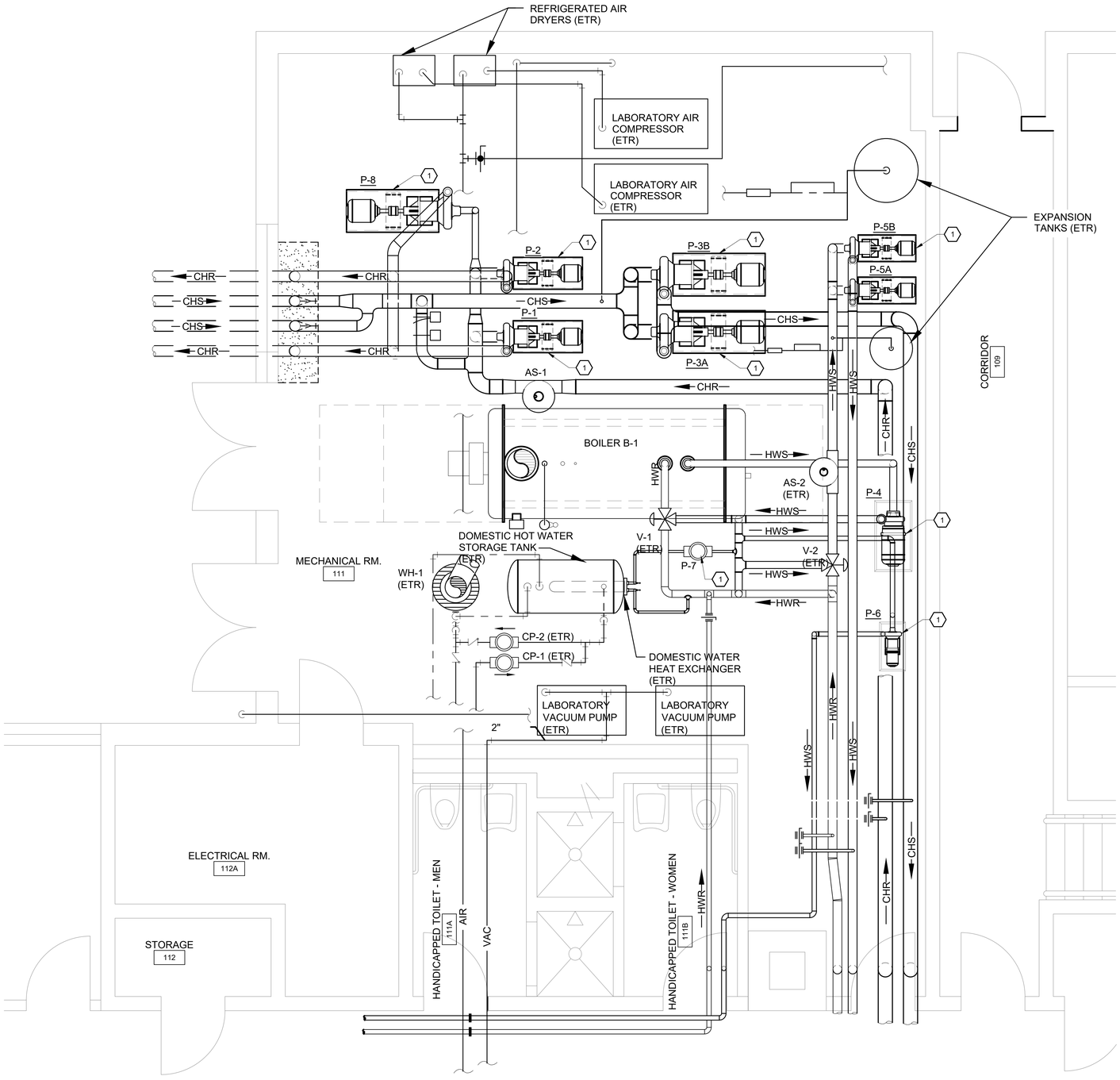

1 MD401 BUILDING 11
ENLARGED MECHANICAL ROOM DEMO
SCALE: 3/8" = 1'-0"

PLAN NORTH

GENERAL NOTES

A. CONTRACTOR MUST PROTECT ALL EXISTING HVAC EQUIPMENT, PIPING, VALVES, CONTROLS, INSULATION, ETC. FROM ANY DAMAGE OR CONTAMINATION.
B. HVAC SYSTEMS AND EQUIPMENT SHOWN ON THIS DRAWING ARE APPROXIMATE. CONTRACTOR SHALL FIELD VERIFY ALL EXISTING CONDITIONS.
C. THE SPECIFIC WORK REQUIRED FOR THIS PHASE IS LISTED IN THE KEYED NOTES BELOW. ANY EQUIPMENT, DUCTWORK, PIPING, ETC. NOT SPECIFICALLY LISTED IN THE KEYED NOTES IS EXISTING.

(X) KEYED NOTES

1. PROVIDE PUMP AS SCHEDULED AND ALL APPURTENANCES. CONNECT TO EXISTING PIPING. PROVIDE FASTENERS AND GASKETS. INSTALL PUMP ON EXISTING CONCRETE PAD (IF APPLICABLE).

LEGEND

POINT OF CONNECTION

GRAPHIC SCALE

32" 0 16" 32"
SCALE: 3/8" = 1'-0"

THE Johnson-McAdams FIRM P.A.
ARCHITECTS/ENGINEERS · PLANNING · SURVEYING · MANAGEMENT
P.O. BOX 513, GREENWOOD, MISSISSIPPI • (662) 453-6843

NO.	DATE	BY	DESCRIPTION

REVISIONS

A-E FIRM	USDA
PROJECT MGR: TEL	COR: E. WILSON
DESIGNER: JND	EPM: E. WILSON
CHECKED BY: BTD	SAFETY & HEALTH: TBD
JOB #: 3925	REAL PROPERTY: TBD

USDA Agricultural Research Service

REPAIR HVAC SYSTEM, BULDINGS 1 AND 11 CENTER FOR MEDICAL AGRICULTURAL AND VETENARY ENTOMOLOGY (CMAVE) - GAINESVILLE, FLORIDA
BUILDING 11 - PHASE 1
ENLARGED MECHANICAL ROOM

PROJECT NO.: ---
DATE: 5/04/2026

USDA ARS
5601 SUNNYSIDE AVENUE
RM 3-2102
BELTVILLE MD 20705

SHEET: M-401
13 OF 28

J:\greenwood\2025 Jobs\3925 USDA B1 & B11 HVAC Repair Gainesville FL\07 Working Folder\Mech\B11 P1M-401.dwg
May 04, 2026 - 4:09pm

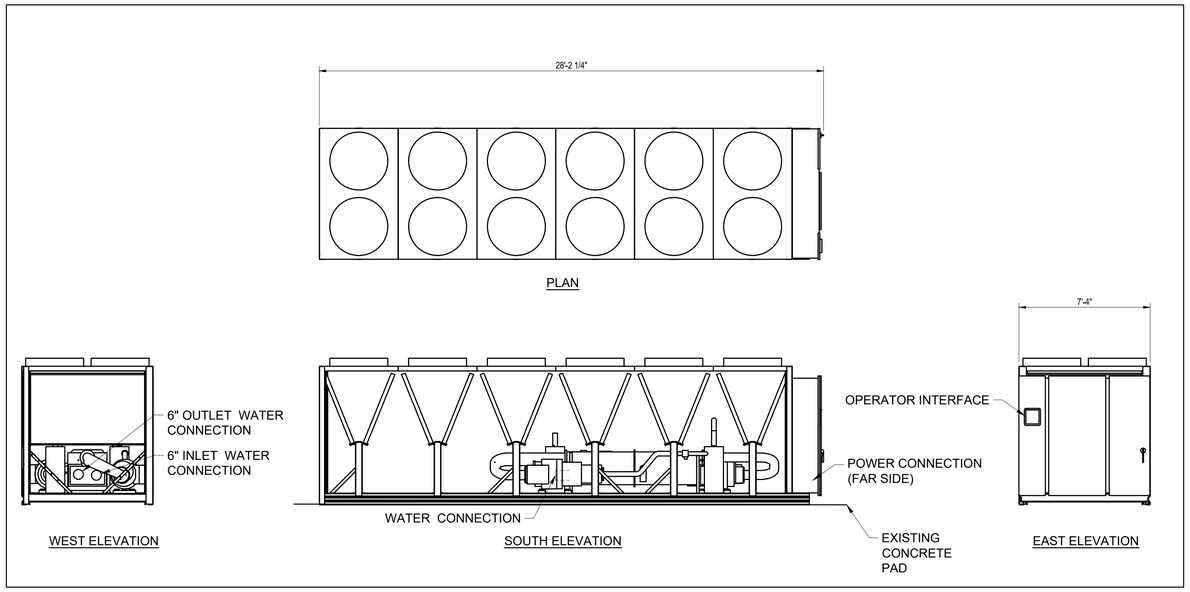

1 / M-501 AIR COOLED CHILLER DETAIL

SCALE: NO SCALE

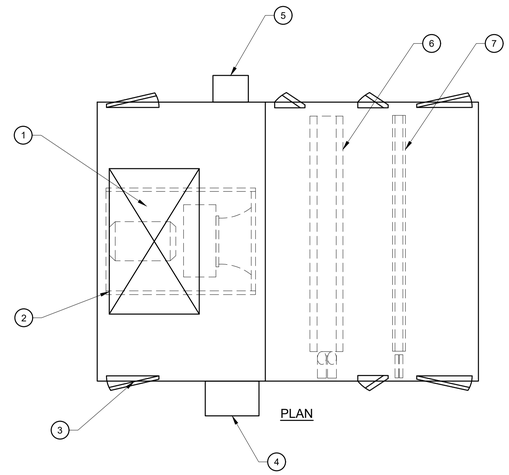

1. PLENUM FAN
2. OPENING TOP 40x30
3. LIGHT SWITCH AND/OR RECEPTACLE RH
4. EXTERNAL VFD RH
5. EXTERNAL UNIT CONTROLLER LH
6. COOLING COIL
7. HEATING COIL
8. 1" N.P.T.E.
9. MARINE LIGHT
10. CARTRIDGE FILTERS

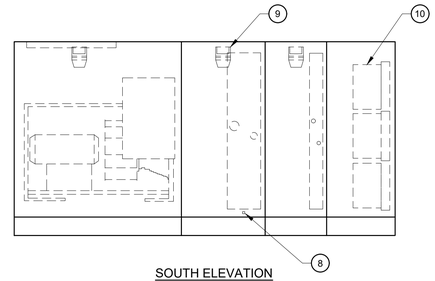

2 / M-501 AIR HANDLING UNIT DETAIL

SCALE: NO SCALE

THE Johnson-McAdams FIRM P.A.
ARCHITECTS/ENGINEERS · PLANNING · SURVEYING · MANAGEMENT
P.O. BOX 513, GREENWOOD, MISSISSIPPI · (662) 455-6943

NO.	DATE	BY	DESCRIPTION

REVISIONS

A-E FIRM	USDA
PROJECT MGR: TEL	COR: E. WILSON
DESIGNER: DKM	EPM: E. WILSON
CHECKED BY: BTD	SAFETY & HEALTH: TBD
JOB #: 3925	REAL PROPERTY: TBD

USDA Agricultural Research Service

REPAIR HVAC SYSTEM, BULDINGS 1 AND 11 CENTER FOR MEDICAL AGRICULTURAL AND VETENARY ENTOMOLOGY (CMAVE) - GAINESVILLE, FLORIDA

BUILDING 11 - PHASE 1
MECHANICAL DETAILS

PROJECT NO.	USDA ARS 5601 SUNNYSIDE AVENUE RM 3-2102 BELTVILLE MD 20705	SHEET
--- DATE: 5/04/2026		M-501 14 OF 28

THOMAS E. LOVELACE
REGISTERED
AGRICULTURAL ENGINEER
10279
STATE OF TENNESSEE

J:\greenwood\2025 Jobs\3925 USDA B1 & B11 HVAC Repair Gainesville FL\07 Working Folder\Mech\B11 P1\M-501-P1.dwg
May 04, 2026 - 4:09pm

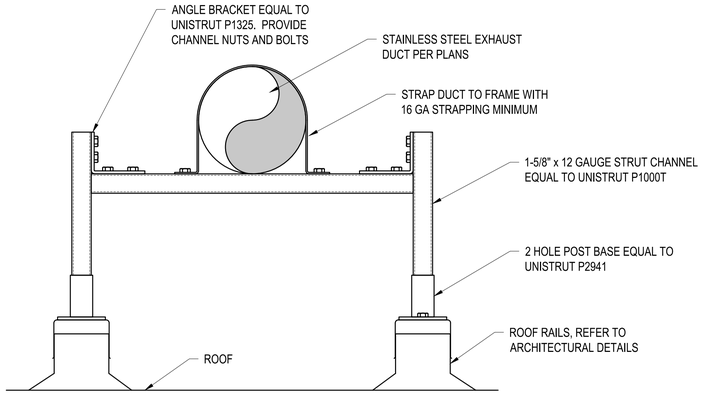

1 M-502 **ROOF DUCT SUPPORT**
SCALE: NOT TO SCALE

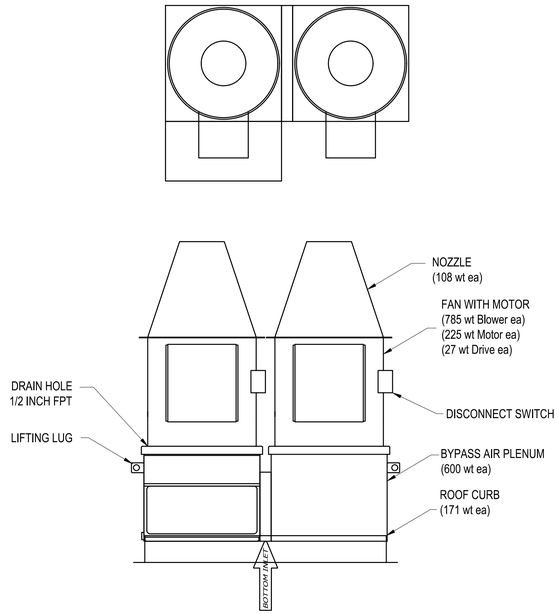

2 M-502 **DUPLEX LAB EXHAUST FAN DETAIL**
SCALE: NOT TO SCALE

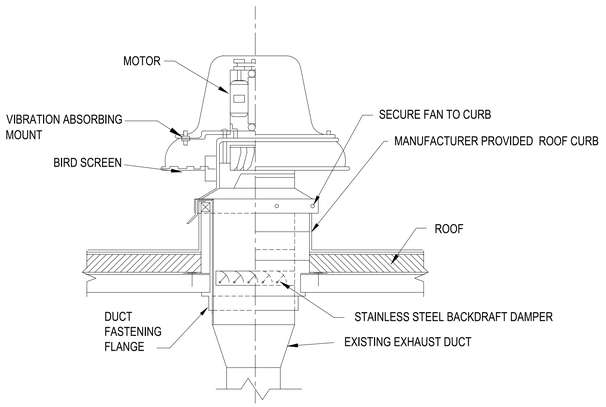

3 M-502 **DOWNBLAST ROOF EXHAUST FAN DETAIL**
SCALE: NOT TO SCALE

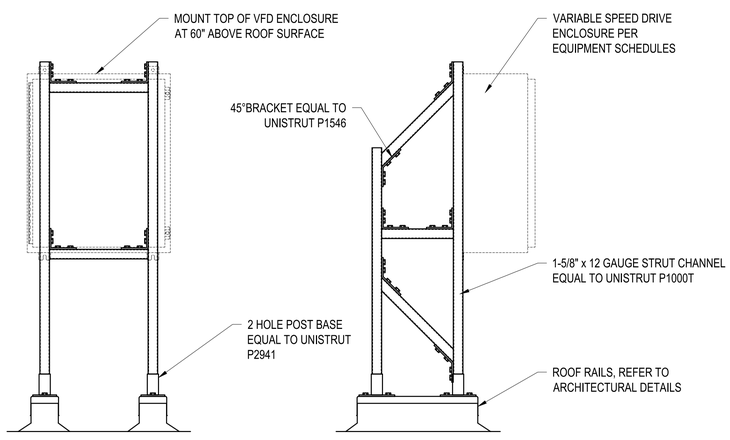

4 M-502 **VFD SUPPORT DETAIL**
SCALE: NOT TO SCALE

ROOF TOP CONSTRUCTION

A. FABRICATION AND ERECTION SHALL BE GOVERNED BY THE REQUIREMENTS OF THE AMERICAN INSTITUTE OF STEEL CONSTRUCTION.

B. ALL STRUCTURAL STEEL SHALL CONFORM TO ASTM:

A36 - M,S,HP,C,MC,L-SHAPES
A500 B - TUBES (HSS)

C. ALL WELDING SHALL BE PERFORMED BY CERTIFIED WELDER AND PERFORMED IN ACCORDANCE WITH AWS D1.1. WELDING MATERIALS SHALL BE E70XX AND BE COMPATIBLE WITH BASE METAL MATERIALS.

D. FIELD VERIFY ALL DIMENSIONS PRIOR TO BEGINNING FABRICATION.

E. THE CONTRACTOR SHALL PROVIDE A FIRE WATCH DURING ALL HOT WORK INCLUDING BUT NOT LIMITED TO WELDING OPERATIONS. SUITABLE FIRE EXTINGUISHING EQUIPMENT SHALL BE MAINTAINED IN A STATE OF READINESS FOR INSTANT USE.

F. THE BUILDING SHALL REMAIN WATERTIGHT DURING AND THROUGH THE COMPLETION OF CONSTRUCTION. THE CONTRACTOR SHALL SEEK APPROVAL FROM THE BUILDING OWNER FOR ANY WORK THAT INVOLVES A BUILDING ENVELOPE PENETRATION.

G. PROVIDE EQUIPMENT MOUNTING WITH SEISMIC/VIBRATION ISOLATION PER MANUFACTURER'S WRITTEN RECOMMENDATIONS FOR THIS APPLICATION.

the Johnson–McAdoo PSMJ
ARCHITECTS/ENGINEERS - PLANNING - SURVEYING - MANAGEMENT
P.O. BOX 185, GREENWOOD, MISSISSIPPI - (662) 455-4545

NO.	DATE	BY	DESCRIPTION

REVISIONS

USDA Agricultural Research Service

REPAIR HVAC SYSTEM, BULDINGS 1 AND 11 CENTER FOR MEDICAL AGRICULTURAL AND VETENARY ENTOMOLOGY (CMAVE) - GAINESVILLE, FLORIDA

BUILDING 11 - PHASE 1
MECHANICAL DETAILS

A–E FIRM	USDA
PROJECT MGR	COR
TEL	E. WILSON
DESIGNER	EPM
DKM	E. WILSON
CHECKED BY	SAFETY & HEALTH
BTD	TBD
JOB #	REAL PROPERTY
3925	TBD

PROJECT NO. ---
DATE 5/04/2026

USDA ARS
5601 SUNNYSIDE AVENUE
RM 3-2102
BELTVILLE MD 20705

SHEET M-502
15 OF 28

THOMAS E. LOVELACE — REGISTERED ENGINEER — AGRICULTURAL — COMMERCE — No. 102768 — STATE OF TENNESSEE

J:\greenwood\2025 Jobs\3925 USDA B1 & B11 HVAC Repair Gainesville FL\07 Working Folder\Mech\B11 P1\M-502-P1.dwg
May 04, 2026 - 4:09pm

AIR COOLED SCREW CHILLER SCHEDULE

MARK	BASIS OF DESIGN		GENERAL DATA		EVAPORATOR DATA					COMPRESSOR DATA			CONDENSER DATA		ELECTRICAL DATA					OPERATING WEIGHT (LB)
	MFR	MODEL NO.	NOMINAL CAPACITY (TONS)	REFRIGERANT	FLOW (GPM)	FLUID	MAX PRESSURE DROP (FT H2O)	ENTERING WATER TEMPERATURE (°F)	LEAVING WATER TEMPERATURE (°F)	QUANTITY	TYPE	MOTOR CONTROL TYPE	AMBIENT TEMPERATURE (°F)	FAN QUANTITY	VOLTAGE	POWER CONNECTIONS	UNIT MCA (AMPS)	UNIT MOCP (AMPS)	UNIT SCCR (AMPS)	
ACCH-1	TRANE	ACRC250	250	R513A	466	20% P.G.	8.5	56	43	2	VARIABLE VOLUME	VFD	95	12	460/3	1	486	600	65,000	16,500

NOTES

1. FACTORY MOUNTED CONTROL TRANSFORMER. CHILLER SHALL HAVE RAPID RESTART OPTION.
2. CHILLER SHALL HAVE A SHELL AND TUBE EVAPORATOR WITH 0.75" THICK INSULATION.
3. FACTORY MOUNTED SINGLE NON-FUSED DISCONNECT SWITCH WITH CIRCUIT BREAKER AND 115V FIELD POWERED CONVENIENCE OUTLET.
4. FACTORY MOUNTED BACNET INTERFACE CARD COMPATIBLE WITH EXISTING SITE ENERGY MANAGEMENT SYSTEM.
5. FACTORY MOUNTED CHILLED WATER FLOW SWITCH.
6. CHILLER CONTROL PANEL SHALL BE SELECTED FOR 125 F AMBIENT TEMPERATURE.
7. CHILLER SHALL HAVE VARIABLE SPEED CONTROL ON ALL CONDENSER FANS.
8. FACTORY MOUNTED COMPRESSOR HEATERS.
9. MECHANICAL CONTRACTOR SHALL INTERLOCK CHILLED WATER PUMPS WITH CHILLER.
10. PROVIDE CHILLER ELASTOMERIC ISOLATORS.
11. UNIT SHALL HAVE TWO REFRIGERANT CIRCUITS. EACH CIRCUIT SHALL INCLUDES COMPRESSOR SUCTION AND DISCHARGE SERVICE VALVES, LIQUID LINE SHUTOFF VALVE, REMOVABLE CORE FILTER, LIQUID LINE SIGHT GLASS, CHARGING PORT AND AN ELECTRONIC EXPANSION VALVE.
12. FACTORY START-UP. FIVE YEARS COMPLETE PARTS, REFRIGERANT, LABOR AND SERVICE WARRANTY.
13. CHILLER SHALL BE CERTIFIED BASED ON AHRI AND ASHRAE 90.1 STANDARDS.
14. CHILLER SHALL HAVE FACTORY MOUNTED PHASE PROTECTION WITH LED AND GROUND FAULT W/ GROUND FAULT PROTECTION FOR THE UNIT.
15. CHILLER MUST BE SHIPPED COMPLETELY WRAPPED IN HEAVY DUTY BAG TO PROTECT FROM ROAD DAMAGE, ROAD SALT, AND CONSTRUCTION DIRT.
16. CHILLER SHALL HAVE FACTORY MOUNTED COMPRESSOR AND CONDENSER FAN SOUND REDUCTION PACKAGE.
17. CHILLER SHALL BE SHIPPED FROM THE FACTORY WITH A FULL REFRIGERANT CHARGE.

CENTRAL STATION AIR HANDLING UNIT SCHEDULE

MARK	BASIS OF DESIGN		AIRFLOW DATA						HOT WATER PRE-HEAT COIL DATA								CHILLED WATER COOLING COIL DATA										ELECTRICAL DATA				OPERATING WEIGHT (LB)	NOTES
	MFR	MODEL NO.	SUPPLY AIR FLOW (CFM)	MINIMUM OUTSIDE AIR (CFM)	ESP (IN. WG)	TSP (IN. WG)	FAN QTY	FAN MOTOR POWER (HP)	TOTAL HEAT (MBH)	ENTERING WATER TEMP (°F)	LEAVING WATER TEMP (°F)	WATER FLOW (GPM)	WATER PRESSURE DROP (FT HD)	ENTERING AIR TEMP (°F)	LEAVING AIR TEMP (°F)	AIR PRESSURE DROP (IN. WG)	TOTAL COOLING (MBH)	SENSIBLE COOLING (MBH)	ENTERING WATER TEMP (°F)	LEAVING WATER TEMP (°F)	WATER FLOW (GPM)	WATER PRESSURE DROP (FT HD)	ENTERING AIR DRY BULB (°F)	ENTERING AIR WET BULB (°F)	LEAVING AIR DRY BULB (°F)	LEAVING AIR WET BULB (°F)	AIR PRESSURE DROP (IN. WG)	VOLTAGE (V/PH/Hz)	FLA (AMPS)	MCA (AMPS)	MAX FUSE (AMPS)		
AHU-1	TRANE	CSAA030	18,100	18,100	4.0	7.4	2	20	667	160	140	67	8	21	55	0.3	1592	872	44	59	222	14.6	98.2	79.3	55	54.9	1.9	460/3/60	52.65	65.65	110	4299	ALL

NOTES:

1. PROVIDE SUPPLY AND RETURN SMOKE DETECTORS COMPATIBLE WITH EXISTING FIRE ALARM SYSTEM.
2. PROVIDE MIXING BOX SECTION WITH DAMPERS AND ACTUATORS COMPATIBLE WITH EXISTING BUILDING AUTOMATION SYSTEM, FILTER SECTION WITH MERV 8 PRE-FILTERS AND MERV 13 SECONDARY FILTERS, PRE-HEAT SECTION, COOLING SECTION, HINGED AND LATCHED ACCESS SECTION, FAN SECTION AND DISCHARGE PLENUM. REFER TO ELEVATIONS FOR CONFIGURATION DETAILS.
3. PROVIDE UNIT WITH HEAVY DUTY BASE RAIL. INSTALL ON 4" HIGH CONCRETE HOUSEKEEPING PAD.
4. UNIT SHALL BE SHIPPED IN MULTIPLE SECTIONS FOR FIELD ASSEMBLY TO ACCOMMODATE INSTALLATION IN BUILDING.
5. DOUBLE WALL CONSTRUCTION WITH FOAM INJECTED INSULATION.
6. PROVIDE STAINLESS STEEL SLOPED DRAIN PANS IN ALL COIL SECTIONS.
7. REUSE EXISTING VFD.

J:\greenwood\2025 Jobs\3925 USDA B1 & B11 HVAC Repair Gainesville FL\07 Working Folder\Mech\B11 P1\M-601-P1.dwg
May 04, 2026 - 4:09pm

THE Johnson-McAdams FIRM P.A.
ARCHITECTS/ENGINEERS · PLANNING · SURVEYING · MANAGEMENT
P.O. BOX 513, GREENWOOD, MISSISSIPPI • (662) 455-6943

NO.	DATE	BY	DESCRIPTION

REVISIONS

THOMAS E. LOVELACE — REGISTERED ENGINEER — STATE OF TENNESSEE — 102789

A-E FIRM	USDA
PROJECT MGR	COR
TEL	E. WILSON
DESIGNER	EPM
DKM	E. WILSON
CHECKED BY	SAFETY & HEALTH
BTD	TBD
JOB #	REAL PROPERTY
3925	TBD

USDA Agricultural Research Service

REPAIR HVAC SYSTEM, BULDINGS 1 AND 11 CENTER FOR MEDICAL AGRICULTURAL AND VETENARY ENTOMOLOGY (CMAVE) - GAINESVILLE, FLORIDA

BUILDING 11 - PHASE 1
MECHANICAL SCHEDULES

PROJECT NO.	USDA ARS 5601 SUNNYSIDE AVENUE RM 3-2102 BELTVILLE MD 20705	SHEET
---		M-601
DATE		16 OF 28
5/04/2026		

FAN COIL UNIT SCHEDULE

MARK	BASIS OF DESIGN		TYPE	AIRFLOW DATA			COOLING COIL DATA						HEATING COIL DATA					FAN DATA		ELECTRICAL DATA			WEIGHT (LB)	NOTES
	MANUFACTURER	MODEL NO.		SUPPLY AIR (CFM)	OUTSIDE AIR (CFM)	ESP (IN. W.C.)	TOTAL COOLING (MBH)	SENSIBLE COOLING (MBH)	FLOW (GPM)	EWT (°F)	LWT (°F)	WPD (FT. W.C.)	CAPACITY (MBH)	FLOW (GPM)	EWT (°F)	LWT (°F)	WPD (FT. W.C.)	POWER (WATTS)	RPM	VOLTAGE (VOLTS/PHE/HZ)	MCA (AMPS)	MFA (AMPS)		
FC-100	TRANE	FCLB060	VERTICAL CABINET	435	40	0.07	9.40	8.67	1.6	44	56.3	1.4	45.7	1.6	200	143	1.1	96	1,380	115/60/1	3.88	15	164	ALL
FC-101	TRANE	FCLB060	VERTICAL CABINET	465	30	0.07	9.64	9.10	1.6	44	56.6	1.4	47.7	1.6	200	140	1.1	107	1,430	115/60/1	3.88	15	164	ALL
FC-102	TRANE	VUVE	VERTICAL CABINET	1,000	110	0.10	25.50	19.52	11.0	44	48.9	15.3	32.6	1.2	200	147	1.0	235	1,105	115/60/1	3.35	15	405	ALL
FC-113	TRANE	FCLB040	VERTICAL CABINET	340	30	0.07	7.01	6.80	1.0	44	58.7	0.6	32.7	1.0	200	135	0.4	84	1,448	115/60/1	3.88	15	155	ALL
FC-114	TRANE	FCLB040	VERTICAL CABINET	340	30	0.07	7.01	6.80	1.0	44	58.7	0.6	32.7	1.0	200	135	0.4	84	1,448	115/60/1	3.88	15	155	ALL
FC-115	TRANE	FCLB040	VERTICAL CABINET	340	30	0.07	7.01	6.80	1.0	44	58.7	0.6	32.7	1.0	200	135	0.4	84	1,448	115/60/1	3.88	15	155	ALL
FC-116	TRANE	FCLB040	VERTICAL CABINET	340	30	0.07	7.01	6.80	1.0	44	58.7	0.6	32.7	1.0	200	135	0.4	84	1,448	115/60/1	3.88	15	155	ALL
FC-117	TRANE	FCLB040	VERTICAL CABINET	340	30	0.07	7.01	6.80	1.0	44	58.7	0.6	32.7	1.0	200	135	0.4	84	1,448	115/60/1	3.88	15	155	ALL
FC-118	TRANE	FCLB040	VERTICAL CABINET	340	30	0.07	7.01	6.80	1.0	44	58.7	0.6	32.7	1.0	200	135	0.4	84	1,448	115/60/1	3.88	15	155	ALL
FC-134	TRANE	FCLB040	VERTICAL CABINET	340	30	0.07	7.01	6.80	1.0	44	58.7	0.6	32.7	1.0	200	135	0.4	84	1,448	115/60/1	3.88	15	155	ALL
FC-135	TRANE	FCLB040	VERTICAL CABINET	340	30	0.07	7.01	6.80	1.0	44	58.7	0.6	32.7	1.0	200	135	0.4	84	1,448	115/60/1	3.88	15	155	ALL
FC-136	TRANE	FCLB040	VERTICAL CABINET	340	30	0.07	7.01	6.80	1.0	44	58.7	0.6	32.7	1.0	200	135	0.4	84	1,448	115/60/1	3.88	15	155	ALL
FC-137	TRANE	FCLB040	VERTICAL CABINET	340	30	0.07	7.01	6.80	1.0	44	58.7	0.6	32.7	1.0	200	135	0.4	84	1,448	115/60/1	3.88	15	155	ALL
FC-138	TRANE	FCLB040	VERTICAL CABINET	340	30	0.07	7.01	6.80	1.0	44	58.7	0.6	32.7	1.0	200	135	0.4	84	1,448	115/60/1	3.88	15	155	ALL
FC-139	TRANE	FCLB030	VERTICAL CABINET	255	0	0.07	6.98	5.43	1.7	44	52.6	5.5	29.2	1.7	200	166	3.9	84	1,441	115/60/1	3.88	15	125	ALL
FC-140	TRANE	FCLB030	VERTICAL CABINET	255	0	0.07	6.98	5.43	1.7	44	52.6	5.5	29.2	1.7	200	166	3.9	84	1,441	115/60/1	3.88	15	125	ALL
FC-141	TRANE	FCLB030	VERTICAL CABINET	255	0	0.07	6.98	5.43	1.7	44	52.6	5.5	29.2	1.7	200	166	3.9	84	1,441	115/60/1	3.88	15	125	ALL
FC-153	TRANE	FCLB030	VERTICAL CABINET	255	0	0.07	6.98	5.43	1.7	44	52.6	5.5	29.2	1.7	200	166	3.9	84	1,441	115/60/1	3.88	15	125	ALL
FC-154	TRANE	FCLB030	VERTICAL CABINET	255	0	0.07	6.98	5.43	1.7	44	52.6	5.5	29.2	1.7	200	166	3.9	84	1,441	115/60/1	3.88	15	125	ALL
FC-155	TRANE	FCLB030	VERTICAL CABINET	260	30	0.07	5.83	5.04	1.1	44	55.1	2.5	27.8	1.1	200	150	1.8	81	1,408	115/60/1	3.88	15	125	ALL
FC-156	TRANE	FCLB030	VERTICAL CABINET	260	30	0.07	5.48	4.91	0.9	44	56.8	1.8	26.6	0.9	200	141	1.2	79	1,390	115/60/1	3.88	15	125	ALL
FC-157	TRANE	FCLB040	VERTICAL CABINET	315	30	0.07	6.56	5.85	1.3	44	54.6	3.4	32.5	1.3	200	150	2.4	98	1,578	115/60/1	3.88	15	125	ALL
FC-168	TRANE	FCLB060	VERTICAL CABINET	435	0	0.07	10.34	9.01	2.2	44	53.9	2.5	48.5	2.2	200	156	2.0	98	1,393	115/60/1	3.88	15	164	ALL
FC-169	TRANE	FCLB030	VERTICAL CABINET	255	0	0.07	5.62	4.91	1.0	44	55.8	2.2	26.9	1.0	200	146	1.5	78	1,384	115/60/1	3.88	15	125	ALL
FC-206	TRANE	FCLB060	VERTICAL CABINET	435	55	0.07	8.56	8.36	1.2	44	59.0	0.9	42.1	1.2	200	130	0.7	95	1,367	115/60/1	3.88	15	164	ALL
FC-207	TRANE	FCLB060	VERTICAL CABINET	465	60	0.07	9.44	9.03	1.5	44	57.2	1.3	46.9	1.5	200	138	1.0	106	1,427	115/60/1	3.88	15	164	ALL
FC-208	TRANE	FCLB060	VERTICAL CABINET	260	30	0.07	7.25	5.74	1.4	44	54.9	1.1	29.5	1.4	200	158	0.9	54	1,064	115/60/1	3.88	15	164	ALL
FC-209	TRANE	FCLB060	VERTICAL CABINET	260	30	0.07	7.25	5.74	1.4	44	54.9	1.1	29.5	1.4	200	158	0.9	54	1,064	115/60/1	3.88	15	164	ALL
FC-210	TRANE	FCLB060	VERTICAL CABINET	260	30	0.07	7.25	5.74	1.4	44	54.9	1.1	29.5	1.4	200	158	0.9	54	1,064	115/60/1	3.88	15	164	ALL
FC-211	TRANE	FCLB060	VERTICAL CABINET	260	30	0.07	7.25	5.74	1.4	44	54.9	1.1	29.5	1.4	200	158	0.9	54	1,064	115/60/1	3.88	15	164	ALL
FC-232	TRANE	FCLB040	VERTICAL CABINET	315	30	0.07	7.55	6.68	1.4	44	55.3	1.0	34.1	1.4	200	151	0.8	78	1,400	115/60/1	3.88	15	155	ALL
FC-233	TRANE	FCLB040	VERTICAL CABINET	315	30	0.07	7.55	6.68	1.4	44	55.3	1.0	34.1	1.4	200	151	0.8	78	1,400	115/60/1	3.88	15	155	ALL
FC-234	TRANE	FCLB040	VERTICAL CABINET	315	30	0.07	7.55	6.68	1.4	44	55.3	1.0	34.1	1.4	200	151	0.8	78	1,400	115/60/1	3.88	15	155	ALL
FC-235	TRANE	VUVE	VERTICAL CABINET	1,000	110	0.10	25.50	19.52	11.0	44	48.9	15.3	32.6	1.2	200	147	1.0	235	1,105	115/60/1	3.35	15	405	ALL

NOTES:
1. EACH UNIT MUST INCLUDE A VALVE PACKAGE WITH INTEGRAL ISOLATION VALVES, CONTROL VALVES, BALANCING VALVES, STRAINER (W/DRAIN VALVE), DRAIN PAN - ALL ACCESSIBLE THROUGH CEILING PANEL.
2. EACH UNIT IS TO INCLUDE A 1" THROWAWAY MERV 4 FILTER.

J:\greenwood\2025 Jobs\3925 USDA B1 & B11 HVAC Repair Gainesville FL\07 Working Folder\Mech\B11 P1\M-602-P1.dwg
May 04, 2026 - 4:09pm

THE Johnson-McAdams FIRM P.A.
ARCHITECTS/ENGINEERS - PLANNING - SURVEYING - MANAGEMENT
P.O. BOX 513, GREENWOOD, MISSISSIPPI - (662) 453-6943

NO.	DATE	BY	DESCRIPTION

REVISIONS

THOMAS E. LOVELACE — REGISTERED ENGINEER — AGRICULTURAL — COMMISSION NO. 102789 — STATE OF TENNESSEE

A-E FIRM	USDA
PROJECT MGR	TEL
COR	E. WILSON
DESIGNER	DKM
EPM	E. WILSON
CHECKED BY	BTD
SAFETY & HEALTH	TBD
JOB #	3925
REAL PROPERTY	TBD

USDA

USDA Agricultural Research Service

REPAIR HVAC SYSTEM, BULDINGS 1 AND 11 CENTER FOR MEDICAL AGRICULTURAL AND VETENARY ENTOMOLOGY (CMAVE) - GAINESVILLE, FLORIDA

BUILDING 11 - PHASE 1
MECHANICAL SCHEDULES

PROJECT NO. ---	USDA ARS 5601 SUNNYSIDE AVENUE RM 3-2102 BELTVILLE MD 20705	SHEET M-602 17 OF 28
DATE 5/04/2026		

PUMP SCHEDULE

MARK	PUMP DATA							SERVICE	FLUID	ELECTRICAL DATA		NOTES
	TYPE	FLOW (GPM)	TOTAL HEAD (FT WG)	RPM	INLET SIZE (IN.)	OUTLET SIZE (IN.)	IMPELLER SIZE (IN.)			MOTOR POWER (HP)	VOLTAGE (VOLTS/PH)	
P-1, P-2	END SUCTION	466	45	1800	4	3	9.3	CHILLER LOOP	20% PROPYLENE GLYCOL	7.5	460 / 3	ALL
P-3A, P-3B	END SUCTION	655	75	1800	5	4	9	CHILLED WATER	20% PROPYLENE GLYCOL	20	460 / 3	ALL
P-4	END SUCTION	265	35	1800	4	3	7	BOILER LOOP	WATER	5	460 / 3	ALL
P-5A, P-5B	END SUCTION	355	66	1800	4	3	9	HEATING WATER	WATER	7.5	460 / 3	ALL
P-6	END SUCTION	40	35	1800	4	3	9	HEATING WATER	WATER	3/4	460 / 3	ALL
P-7	IN-LINE	15	23	1800	4	3	8.5	HEATING WATER	WATER	1/3	460 / 3	ALL
P-8	END SUCTION	466	45	1800	4	3	9.3	CHILLER LOOP	20% PROPYLENE GLYCOL	7.5	460 / 3	ALL

NOTES
1. PUMPS TO BE REPLACEMENT IN KIND OF EXISTING PUMPS.
2. PROVIDE 150 LB FLANGED INLET AND OUTLET CONNECTIONS.
3. PROVIDE STAINLESS STEEL IMPELLER.
4. PROVIDE INLET AND OUTLET ISOLATION VALVES.
5. PROVIDE INLET AND OUTLET FLEX CONNECTIONS.
6. VARIABLE SPEED PUMPS SHALL BE SIZED TO DELIVER RATED FLOW AT 90% SPEED (54 HZ).
7. PRELIMINARY PUMP SIZING SHOWN. CONTRACTOR TO VERIFY FINAL PRESSURE DROP BASED ON ACTUAL PIPE ROUTING AND SIZING. CONTRACTOR TO SIZE PUMPS PER MANUFACTURER'S RECOMMENDATION. PROVIDE PUMP OF SUFFICIENT CAPACITY TO DELIVER SHEDULED FLOW RATE AT LISTED HEAD. SELECT MOTOR HP BASED ON PUBLISHED NON OVERLOADING HP AT ACTUAL CONDITIONS.

THE Johnson-McAdams FIRM P.A.
ARCHITECTS/ENGINEERS - PLANNING - SURVEYING - MANAGEMENT
P.O. BOX 515, GREENWOOD, MISSISSIPPI - (662) 455-4540

NO.	DATE	BY	DESCRIPTION

REVISIONS

A-E FIRM	USDA
PROJECT MGR	COR
TEL	E. WILSON
DESIGNER	EPM
DKM	E. WILSON
CHECKED BY	SAFETY & HEALTH
BTD	TBD
JOB #	REAL PROPERTY
3925	TBD

USDA Agricultural Research Service

REPAIR HVAC SYSTEM, BULDINGS 1 AND 11 CENTER FOR MEDICAL AGRICULTURAL AND VETENARY ENTOMOLOGY (CMAVE) - GAINESVILLE, FLORIDA

BUILDING 11 - PHASE 1
MECHANICAL SCHEDULES

PROJECT NO. ---	USDA ARS 5601 SUNNYSIDE AVENUE RM 3-2102 BELTVILLE MD 20705	SHEET M-603
DATE 5/04/2026		18 OF 28

THOMAS E. LOVELACE REGISTERED ENGINEER AGRICULTURAL STATE OF TENNESSEE COMMERCE NO. 102768

J:\greenwood\2025 Jobs\3925 USDA B1 & B11 HVAC Repair Gainesville FL\07 Working Folder\Mech\B11 P1\M-603-P1.dwg
May 04, 2026 - 4:09pm

SEQUENCE OF OPERATION

VARIABLE AIR VOLUME 100% OA ROOFTOP UNIT SYSTEM OPERATION

ROOFTOP UNIT (AHU-1) RUN CONDITIONS - REQUESTED:

THE UNIT SHALL RUN ACCORDING TO A USER DEFINABLE TIME SCHEDULE IN THE FOLLOWING MODES:

- OCCUPIED MODE: THE UNIT SHALL MAINTAIN
  - § A 72°F (ADJ.) COOLING SETPOINT
  - § A 70°F (ADJ.) HEATING SETPOINT.
- UNOCCUPIED MODE (NIGHT SETBACK): THE UNIT SHALL MAINTAIN
  - § A 80°F (ADJ.) COOLING SETPOINT.
  - § A 55°F (ADJ.) HEATING SETPOINT.

ALARMS SHALL BE PROVIDED AS FOLLOWS:

- HIGH DISCHARGE AIR TEMP: IF THE DISCHARGE AIR TEMPERATURE IS GREATER THAN THE COOLING SETPOINT BY A USER DEFINABLE AMOUNT (ADJ.).
- LOW DISCHARGE AIR TEMP: IF THE DISCHARGE AIR TEMPERATURE IS LESS THAN THE HEATING SETPOINT BY A USER DEFINABLE AMOUNT (ADJ.).

DISCHARGE AIR SETPOINT ADJUST:

THE OCCUPANT SHALL BE ABLE TO ADJUST THE DISCHARGE AIR TEMPERATURE HEATING AND COOLING SETPOINTS.

OPTIMAL START:

THE UNIT SHALL USE AN OPTIMAL START ALGORITHM FOR MORNING START-UP. THIS ALGORITHM SHALL MINIMIZE THE UNOCCUPIED WARM-UP OR COOL-DOWN PERIOD WHILE STILL ACHIEVING COMFORT CONDITIONS BY THE START OF SCHEDULED OCCUPIED PERIOD.

ZONE UNOCCUPIED OVERRIDE:

A TIMED LOCAL OVERRIDE CONTROL SHALL ALLOW AN OCCUPANT TO OVERRIDE THE SCHEDULE AND PLACE THE UNIT INTO AN OCCUPIED MODE FOR AN ADJUSTABLE PERIOD OF TIME. AT THE EXPIRATION OF THIS TIME, CONTROL OF THE UNIT SHALL AUTOMATICALLY RETURN TO THE SCHEDULE.

SUPPLY FAN:

THE SUPPLY FAN SHALL RUN ANYTIME THE UNIT IS COMMANDED TO RUN, UNLESS SHUTDOWN ON SAFETIES. TO PREVENT SHORT CYCLING, THE SUPPLY FAN SHALL HAVE A USER DEFINABLE (ADJ.) MINIMUM RUNTIME. THE SUPPLY FAN VFD SHALL MODULATE TO MAINTAIN A USER ADJUSTABLE DUCT STATIC PRESSURE SETPOINT. FAN MODULATION SHALL ALSO BE CONTROLLED TO MAINTAIN POSITIVE BUILDING PRESSURE WITH RESPECT TO OUTDOORS AND SHALL MAINTAIN THE LAB SPACES NEGATIVE WITH RESPECT TO THE OTHER AREAS OF THE BUILDING. ALARMS SHALL BE PROVIDED AS FOLLOWS:

- SUPPLY FAN FAILURE: COMMANDED ON, BUT THE STATUS IS OFF.
- SUPPLY FAN IN HAND: COMMANDED OFF, BUT THE STATUS IS ON.
- SUPPLY FAN RUNTIME EXCEEDED: STATUS RUNTIME EXCEEDS A USER DEFINABLE LIMIT (ADJ.).

SUPPLY AIR TEMPERATURE SETPOINT - OPTIMIZED:

THE CONTROLLER SHALL MONITOR THE SUPPLY AIR TEMPERATURE AND SHALL MAINTAIN A SUPPLY AIR TEMPERATURE SETPOINT RESET BASED ON ZONE COOLING AND HEATING REQUIREMENTS AS DETERMINED BY AVERAGE ZONE TEMPERATURE. THE SUPPLY AIR TEMPERATURE SETPOINT SHALL BE RESET FOR COOLING BASED ON ZONE COOLING REQUIREMENTS AS FOLLOWS:

- THE INITIAL SUPPLY AIR TEMPERATURE SETPOINT SHALL BE 55°F (ADJ.).
- AS COOLING DEMAND INCREASES, THE SETPOINT SHALL INCREMENTALLY RESET DOWN TO A MINIMUM OF 53°F (ADJ.).
- AS COOLING DEMAND DECREASES, THE SETPOINT SHALL INCREMENTALLY RESET UP TO A MAXIMUM OF 58°F (ADJ.).

IF MORE ZONES NEED HEATING THAN COOLING, THEN THE SUPPLY AIR TEMPERATURE SETPOINT SHALL BE RESET AS FOLLOWS:

- THE INITIAL SUPPLY AIR TEMPERATURE SETPOINT SHALL BE 60°F (ADJ.).
- AS HEATING DEMAND INCREASES, THE SETPOINT SHALL INCREMENTALLY RESET UP TO A MAXIMUM OF 65°F (ADJ.).
- AS HEATING DEMAND DECREASES, THE SETPOINT SHALL INCREMENTALLY RESET DOWN TO A MINIMUM OF 58°F (ADJ.).

CILLED WATER COOLING:

THE CONTROLLER SHALL MEASURE THE SUPPLY AIR TEMPERATURE AND CONTROL THE COOLING SYSTEM TO MAINTAIN DISCHARGE AIR SETPOINT. THE CHILLED WATER MODULATE BASED ON COOLING LOAD. COOLING SHALL BE ENABLED WHENEVER:

- THE TEMPERATURE CONTROLS IS ACTIVATED.
- AND THE SUPPLY FAN STATUS IS ON.
- AND THE ZONE TEMPERATURE IS ABOVE COOLING SETPOINT.
- AND THE HEATING IS NOT ACTIVE.

FREEZESTAT:

THE FREEZESTAT SHALL PROTECT THE UNIT FROM FREEZING.

HEATING COIL CONTROL:

HEAT SHALL BE ENABLED WHENEVER:

- OUTSIDE AIR TEMPERATURE IS LESS THAN 65°F (ADJ.).
- AND THE DISCHARGE AIR TEMPERATURE IS BELOW HEATING SETPOINT.
- AND THE SUPPLY FAN STATUS IS ON.
- AND THE COOLING IS NOT ACTIVE.

SUPPLY AIR TEMPERATURE:

THE CONTROLLER SHALL MONITOR THE SUPPLY AIR TEMPERATURE. ALARMS SHALL BE PROVIDED AS FOLLOWS:

- HIGH SUPPLY AIR TEMP: IF THE SUPPLY AIR TEMPERATURE IS GREATER THAN 120°F (ADJ.).
- LOW SUPPLY AIR TEMP: IF THE SUPPLY AIR TEMPERATURE IS LESS THAN 45°F (ADJ.).

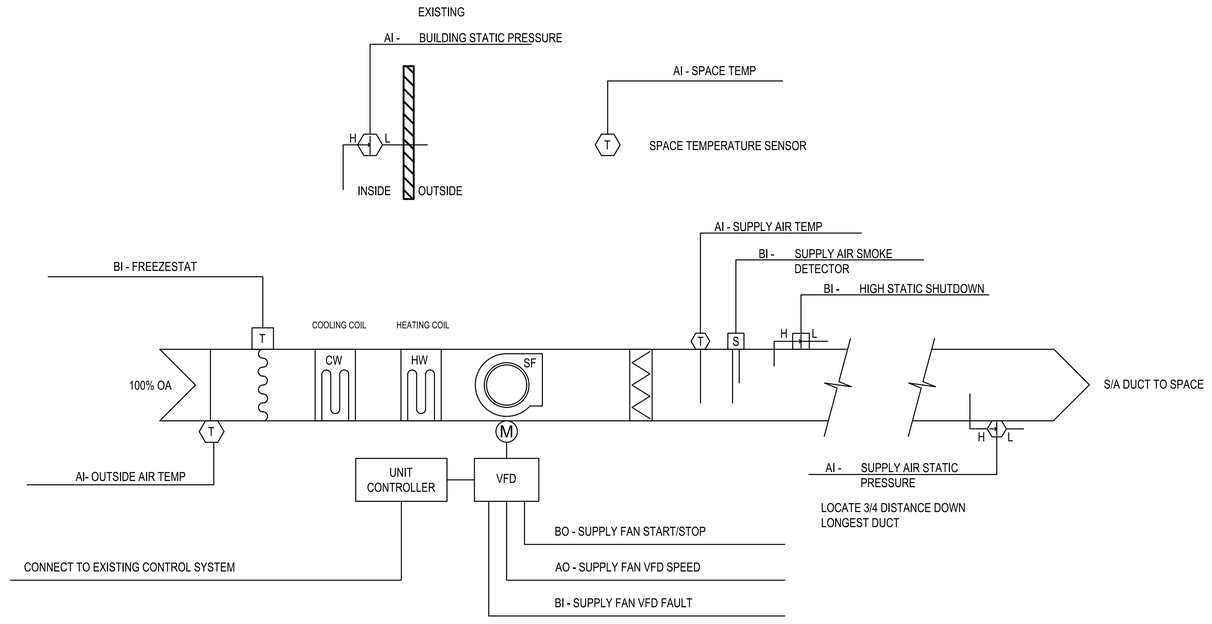

1 M-701 DEDICATED OUTDOOR UNIT AHU-1 CONTROLS DIAGRAM

SCALE: NOT TO SCALE

NOTE:
ALL CONTROLS FOR AHU-1 SHALL BE COMPATABLE WITH AND CONNECT TO THE EXISTING CONTROL SYSTEM SERVING THE BUILDING.

THE Johnson-McAdams FIRM P.A.
ARCHITECTS/ENGINEERS - PLANNING - SURVEYING - MANAGEMENT
P.O. BOX 515, GREENWOOD, MISSISSIPPI - (662) 455-4543

NO.	DATE	BY	DESCRIPTION
			REVISIONS

A-E FIRM	USDA
PROJECT MGR	COR
TEL	E. WILSON
DESIGNER	EPM
JND	E. WILSON
CHECKED BY	SAFETY & HEALTH
BTD	TBD
JOB #	REAL PROPERTY
3925	TBD

USDA Agricultural Research Service

REPAIR HVAC SYSTEM, BULDINGS 1 AND 11 CENTER FOR MEDICAL AGRICULTURAL AND VETENARY ENTOMOLOGY (CMAVE) - GAINESVILLE, FLORIDA

BUILDING 1 DEDICATED OUTDOOR UNIT AHU-1 CONTROLS DIAGRAM

PROJECT NO.		SHEET
---	USDA ARS 5601 SUNNYSIDE AVENUE RM 3-2102 BELTVILLE MD 20705	M-701
DATE		19 OF 28
5/04/2026		

THOMAS E. LOVELACE REGISTERED ENGINEER AGRICULTURAL STATE OF TENNESSEE 102768

J:\greenwood\2025 Jobs\3925 USDA B1 & B11 HVAC Repair Gainesville FL\07 Working Folder\Mech\B11 P1\M-701.dwg
May 04, 2026 - 4:09pm

GENERAL SYMBOLS LEGEND

(NOT ALL SYMBOLS MAY APPLY, TYP.)

SYMBOL / KEY	DESCRIPTION
	CONDUCTORS IN CONDUIT CONCEALED WITHIN WALL OR CEILING. TIC MARKS INDICATE NUMBER OF CONDUCTORS. THE EQUIPMENT GROUNDING CONDUCTOR IS NOT SHOWN, BUT SHALL BE PROVIDED. SIZE THE EQUIPMENT GROUNDING CONDUCTOR AND THE CONDUIT PER THE NEC. THE ABSENCE OF TIC MARKS SIGNIFIES THAT TWO CONDUCTORS PLUS AN EQUIPMENT GROUNDING CONDUCTOR SHOULD BE PROVIDED. FOR EXAMPLE, THE MARKINGS TO THE LEFT SIGNIFY THAT THREE CONDUCTORS PLUS AN EQUIPMENT GROUNDING CONDUCTOR SHOULD BE PROVIDED.
10	THE TEXT INSIDE THE ARC INDICATES THE AWG SIZE OF THE CONDUCTORS THAT SHALL BE RUN IN THE CONDUIT. THE ABSENCE OF TEXT SIGNIFIES THAT THE CONDUCTORS SHOULD BE #12 AWG.
	CIRCUITRY RUN IN STRAIGHT LINE SEGMENTS SIGNIFIES EXPOSED SURFACE-MOUNTED RACEWAY (SEE SPECIFICATIONS).
	CONDUCTORS IN CONDUIT CONCEALED BELOW GRADE OR FLOOR. TIC MARKS INDICATE NUMBER OF CONFUCTORS. THE EQUIPMENT GROUNDING CONDUCTOR IS NOT SHOWN, BUT SHALL BE PROVIDED. SIZE THE EQUIPMENT GROUNDING CONDUCTOR AND THE CONDUIT PER THE NEC. THE ABSENCE OF TIC MARKS SIGNIFIES THAT TWO CONDUCTORS PLUS AN EQUIPMENT GROUNDING CONDUCTOR SHOULD BE PROVIDED. THE MARKINGS TO THE LEFT SIGNIFY THAT THREE CONDUCTORS PLUS AN EQUIPMENT GROUNDING CONDUCTOR SHOULD BE PROVIDED.
LA-1	HOMERUN TO PANELBOARD. ARC DENOTES CONCEALED CIRCUITRY. TEXT DENOTES PANELBOARD NAME WITH CIRCUIT NUMBER. DEVICES HAVING CIRCUIT NUMBERS LOCATED BESIDE THEM MAY NOT SHOW THE CIRCUIT NUMBERS AT THE HOMERUN ARROWS.
LA-1	PARTIAL HOMERUN TO PANELBOARD. COMBINE ALL PARTIAL HOMERUNS THAT ARE ON THE SAME CIRCUIT IN A JUNCTION BOX PRIOR TO ENTERING THE PANELBOARD.
LA1-13	PANELBOARD AND CIRCUIT DESIGNATION

POWER OUTLET AND COMMUNICATIONS LEGEND

SYMBOL / KEY	DESCRIPTION
?	DUPLEX RECEPTACLE, NEMA 5-20R, MOUNTED 18" A.F.F. TO CENTERLINE OF BOX UNLESS NOTED OTHERWISE.
(42)	ELECTRICAL OR COMMUNICATION DEVICE, MH = AT ELEVATION AFF INDICATED (42" AFF SHOWN)

LIGHTING AND SWITCHING LEGEND

SYMBOL / KEY	DESCRIPTION	SYMBOL / KEY	DESCRIPTION
?	2'X4' RECESSED FIXTURE.	FACP	EXISTING FIRE ALARM CONTROL PANEL
?	EXISTING WALL MOUNTED EXIT SIGN	DR	DUCT SMOKE DETECTOR IN RETURN DUCT.
? ?	EMERGENCY LIGHTING.	DS	DUCT SMOKE DETECTOR IN SUPPLY DUCT.
T	HORSEPOWER RATED SWITCH WITH THERMAL OVERLOADS (MANUAL MOTOR STARTER).		

ONE-LINE DIAGRAM, SCHEDULE, AND DISTRIBUTION LEGEND

SYMBOL / KEY	DESCRIPTION	SYMBOL / KEY	DESCRIPTION
?/?/?	NON-FUSED DISCONNECT SWITCH. TEXT INDICATES AMPACITY/NUMBER OF POLES/ENCLOSURE TYPE.	J	CEILING MOUNTED JUNCTION BOX.
		J	WALL MOUNTED JUNCTION BOX.
?/?/? F-?	FUSED DISCONNECT SWITCH. TEXT INDICATES AMPACITY/NUMBER OF POLES/ENCLOSURE TYPE; F-(RATING OF FUSES).	~	FLEX. CONNECTION TO EQUIPMENT.
		?	PANELBOARD.
M	MOTOR		MAGNETIC MOTOR STARTER/ VARIABLE FREQUENCY DRIVE.

VOLTAGE DROP CHART FOR 20A, 1Ø CIRCUITS

VOLTAGE	CIRCUIT LENGTH	CONDUCTOR SIZE (AWG)
120	<50'	#12
120	>50'	#10
120	>90'	#8
120	>140'	#6
277	<130'	#12
277	>130'	#10
277	>200'	#8
277	>330'	#6

VOLTAGE DROP CHART NOTES:

1) CIRCUIT SIZES INDICATED ON THE DRAWINGS ARE MINIMUM REQUIREMENTS. REFER TO THIS CHART FOR UPSIZING CONDUCTORS AS NEEDED.

2) DO NOT CONNECT CONDUCTORS LARGER THAN #10 DIRECTLY TO A RECEPTACLE OR A SWITCH. PROVIDE A JUNCTION BOX TO DOWNSIZE THE CONDUCTOR TO #12 AT THE DEVICE.

3) FOR CIRCUITS LONGER THAN THOSE LISTED ABOVE, CONSULT WITH THE ENGINEER FOR CONDUCTOR SIZES.

MASTER NOTES - ELECTRICAL:

1. THE CONTRACTOR SHALL ABIDE BY ALL FEDERAL, STATE, AND/OR LOCAL CODES. IF A DISCREPANCY BETWEEN CODES OCCURS, THE MOST STRINGENT SHALL PREVAIL.
2. THE CONTRACTOR SHALL FIELD VERIFY EXISTING CONDITIONS PRIOR TO THE COMMENCEMENT OF ANY WORK. SHOULD DISCREPANCIES BE DISCOVERED, THE CONTRACTOR SHALL VERIFY INTENT WITH THE ENGINEER/CONTRACTING OFFICER BEFORE PROCEEDING.
3. COORDINATE LOCATIONS OF ALL CEILING MOUNTED DEVICES WITH OTHER TRADES PRIOR TO INSTALLATION.
4. ALL EQUIPMENT INSTALLED IN THIS PROJECT MUST COMPLY WITH THE "BUY AMERICAN ACT" (BAA). BASIS OF DESIGN SHOWN ON SCHEDULES IS TO ESTABLISH A STANDARD OF QUALITY, NOT TO LIMIT COMPETITION. EQUIVALENT EQUIPMENT FROM ANOTHER MANUFACTURER IS ACCEPTABLE. MANUFACTURER NAME AND MODEL NUMBERS ARE BASIS OF DESIGN AND ARE SHOWN FOR INFORMATION ONLY AND MAY OR MAY NOT COMPLY WITH BAA. REFER TO SPECIFICATIONS FOR COMPLETE REQUIREMENTS.
5. CONTRACTOR SHALL COORDINATE ALL ELECTRICAL WORK WITH MECHANICAL CONTRACTOR TO ENSURE PROPER INSTALLATION OF HVAC EQUIPMENT, CONTROLS, AND ASSOCIATED SYSTEMS. PROVIDE ALL NECESSARY POWER, CONTROL WIRING, AND CONNECTIONS WHETHER OR NOT SPECIFICALLY SHOWN.

GENERAL NOTES:

1. DEVICES NOTED AS 'GFI' SHALL BE GROUND FAULT CIRCUIT INTERRUPTING DEVICES.
2. DEVICES NOTED AS 'WP' SHALL BE WEATHERPROOF WHILE-IN-USE.
3. PROVIDE UNSWITCHED POWER TO THE EMERGENCY BATTERY PACKS.
4. 'W/E' DENOTES PROVIDED WITH EQUIPMENT.
5. MINIMUM RACEWAY SIZE SHALL BE 3/4". INCREASE RACEWAY SIZE AS REQUIRED TO LIMIT RACEWAY FILL RATIO TO LESS THAN 40% FULL.
6. THE ELECTRICAL CONTRACTOR SHALL CAREFULLY COORDINATE WORK WITH OTHER TRADES THROUGH THE GENERAL CONTRACTOR AND SHALL BE RESPONSIBLE FOR SECURING SPACE REQUIREMENTS FOR ELECTRICAL EQUIPMENT AND CORRECT ROUGH-IN LOCATIONS OF ELECTRICAL CONNECTIONS.
7. ALL FEEDERS AND BRANCH CIRCUITS SHALL INCLUDE A GREEN INSULATED GROUND CONDUCTOR, SIZED PER THE NATIONAL ELECTRICAL CODE, OR AS SHOWN, CONNECTED TO EACH DEVICE AND OUTLET BOX ON THE CIRCUIT AND TO THE PANELBOARD GROUND BUS. PROVIDE A DEDICATED NEUTRAL CONDUCTOR FOR EACH BRANCH CIRCUIT. MULTIPLE BRANCH CIRCUITS IN ONE RACEWAY REQUIRE ONLY ONE GROUND CONDUCTOR.
8. "PROVIDE" IS AN INCLUSIVE TERM USED TO DESCRIBE ASPECTS OF THE WORK TO BE ACCOMPLISHED, AND IS HEREBY DEFINED TO REQUIRE TO STORE, FURNISH, INSTALL, MOUNT, CONNECT, CONTROL AND POWER EQUIPMENT INDICATED, AS WELL AS ALL APPURTENANCES REQUIRED TO MAKE ELECTRICAL SYSTEMS OPERATE AS INDICATED WITHIN THESE DRAWINGS AND SPECIFICATIONS AND TO FULFILL THE SCOPE OF WORK.
9. ALL CONDUCTORS SHALL BE COPPER
10. CONTRACTOR SHALL FIELD VERIFY ALL EXISTING CONDITIONS, DIMENSIONS AND ELEVATIONS BEFORE PROCUREMENT OF ANY MATERIALS AND DEVELOPMENT OF ANY SHOP DRAWINGS OR SUBMITTALS.
11. PROVIDE LABELS ON ALL RECEPTACLES AND JUNCTION BOXES INDICATING THE SOURCE PANEL & CIRCUIT(S). TEXT SHALL BE BLACK, 1/4". LABELS ABOVE FINISHED CEILING CAN BE HANDWRITTEN WITH AN INDELIBLE MARKER.
12. CIRCUIT SIZES INDICATED ON THE DRAWINGS ARE MINIMUM REQUIREMENTS.
13. DO NOT CONNECT CONDUCTORS LARGER THAN #10 DIRECTLY TO A RECEPTACLE OR A SWITCH. PROVIDE A JUNCTION BOX TO DOWNSIZE THE CONDUCTOR TO #12 AT THE DEVICE.

RECEPTACLE DETAIL NOTES:

A. RECEPTACLES SHALL NOT BE CONNECTED IN A FEED-THRU MANNER. WIRE CONNECTIONS IN RECEPTACLE BOXES SHALL BE MADE IN A PIGTAIL MANNER.

B. RECEPTACLES SHOWN AS GFI MAY BE NON GFI TYPE RECEPTACLES IF FED FROM A 20/1 GFI BREAKER OR THE LOAD SIDE OF A GFI RECEPTACLE IN THE SAME ROOM, ON THE SAME CIRCUIT AND RATED 20 AMP FEED-THRU CAPACITY. COVER PLATES SHALL BE CLEARLY MARKED GFI.

C. NON GFI RECEPTACLES SHALL NOT BE CONNECTED IN A FEED-THRU MANNER. WIRE CONNECTIONS IN RECEPTACLE BOXES SHALL BE MADE IN A PIGTAIL MANNER AS SHOWN IN RECEPTACLE DETAIL.

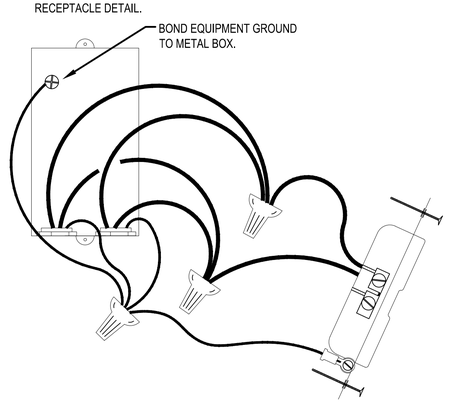

1 / E-001 RECEPTACLE DETAIL

SCALE: NONE

BRADEN T. DUKE — LICENSED PROFESSIONAL ENGINEER — 35781 — 5-4-2026 — STATE OF MISSISSIPPI

THE Johnson-McAdams FIRM P.A.
ARCHITECTS/ENGINEERS · PLANNING · SURVEYING · MANAGEMENT
P.O. BOX 513, GREENWOOD, MISSISSIPPI · (662) 455-6943

NO.	DATE	BY	DESCRIPTION
			REVISIONS

A-E FIRM	USDA
PROJECT MGR: TEL	COR: E. WILSON
DESIGNER: EJH	EPM: E. WILSON
CHECKED BY: BTD	SAFETY & HEALTH: TBD
JOB #: 3925	REAL PROPERTY: TBD

USDA Agricultural Research Service

REPAIR HVAC SYSTEM, BULDINGS 1 AND 11 CENTER FOR MEDICAL AGRICULTURAL AND VETENARY ENTOMOLOGY (CMAVE) - GAINESVILLE, FLORIDA

BUILDING 11 - PHASE 1
ELECTRICAL LEGEND

PROJECT NO.	USDA ARS 5601 SUNNYSIDE AVENUE RM 3-2102 BELTVILLE MD 20705	SHEET
---		E-001
DATE: 5/04/2026		20 OF 28

C:\Users\BRADEN~1\AppData\Local\Temp\AcPublish_44908\E-001.dwg
May 04, 2026 - 12:47pm

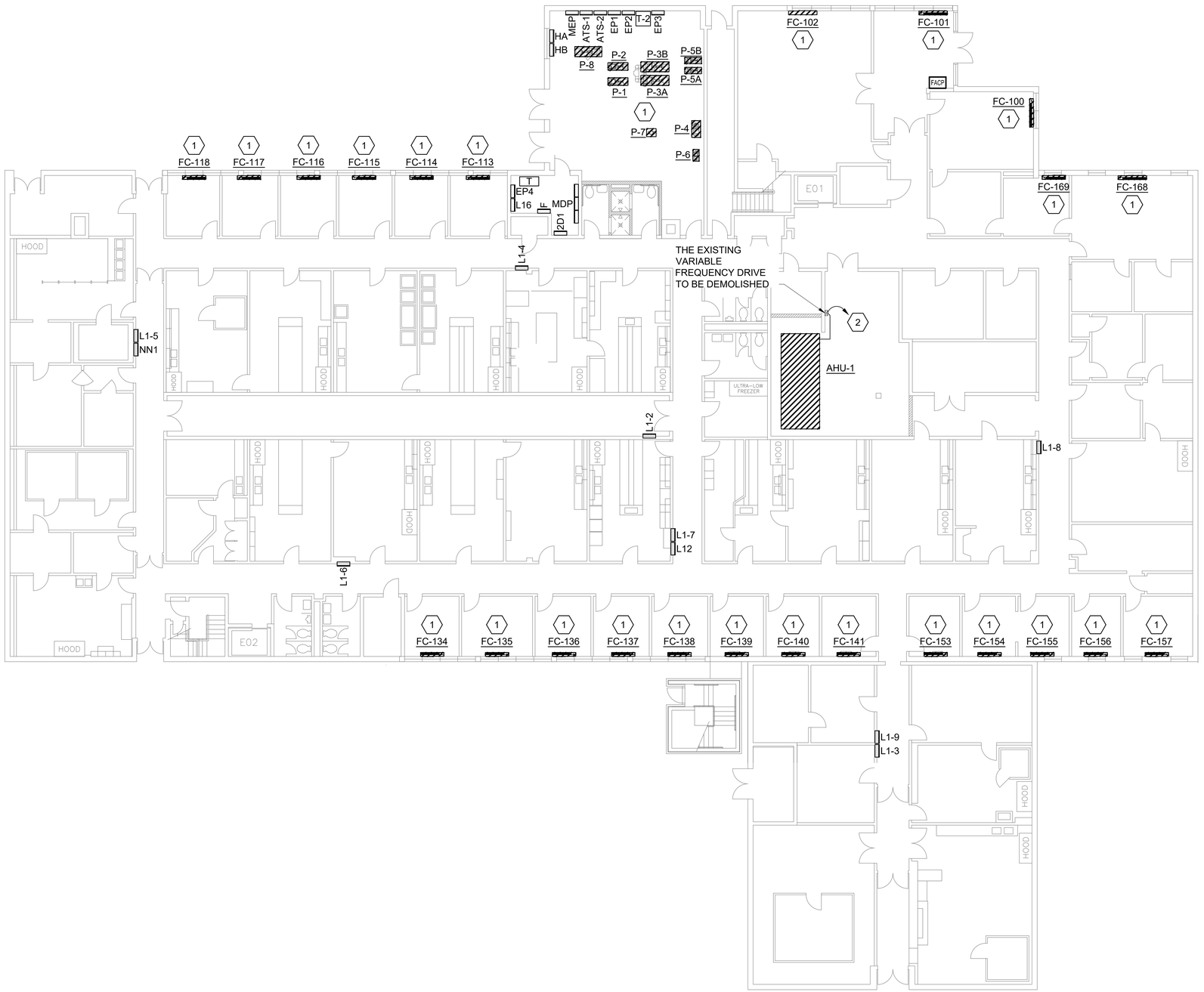

GENERAL DEMOLITION NOTES

A. THE DEMOLITION PLAN AND EXISTING CONDITIONS ARE APPROXIMATE. ITEMS TO BE REMOVED ARE DESIGNATED BY HATCHING AND DASHED LINES. OTHER ITEMS ARE INTENDED TO REMAIN IN PLACE UNLESS NOTED OTHERWISE.

B. PRIOR TO BEGINNING WORK, SURVEY EXISTING ELECTRICAL SYSTEMS. DOCUMENT, IN WRITING, SIGNED BY THE CONTRACTING OFFICER, ANY PORTIONS OF THE EXISTING SYSTEMS THAT ARE NOT OPERATING PROPERLY BEFORE CONSTRUCTION BEGINS. ANY ELECTRICAL SYSTEMS FOUND INOPERABLE AT THE END OF THE CONSTRUCTION PROCESS THAT HAVE NOT BEEN DOCUMENTED SHALL BE REPAIRED BY THE CONTRACTOR AT HIS OWN EXPENSE.

C. PRIOR TO BEGINNING THE DEMOLITION PROCESS, CONDUCT A COMPREHENSIVE SITE SURVEY WITH THE ASSISTANCE OF THE CONTRACTING OFFICER. IDENTIFY AND MARK ALL EXISTING EQUIPMENT TO REMAIN AND ALL EXISTING RACEWAYS AND CIRCUITRY THAT ARE PRESENTLY PASSING THROUGH THE CONSTRUCTION AREA THAT ARE FEEDING EXISTING EQUIPMENT TO REMAIN.

D. REMOVE ELECTRICAL EQUIPMENT IN AREAS BEING DEMOLISHED, AND ELECTRICAL EQUIPMENT FEEDING OTHER EQUIPMENT BEING DEMOLISHED. REMOVE RACEWAYS AND CIRCUITRY BACK TO THE PANEL OF ORIGINATION. WHERE CIRCUITS ARE NOT BEING COMPLETELY DEMOLISHED, REMOVE RACEWAYS AND CIRCUITRY BACK TO A JUNCTION BOX OR OTHER COMMON CONNECTION POINT AND RECIRCUIT EXISTING ELECTRICAL EQUIPMENT TO REMAIN AS REQUIRED. WHERE NECESSARY, COMPLETELY REFEED EXISTING ELECTRICAL EQUIPMENT THAT IS TO REMAIN IF REQUIRED. IT IS THE INTENT OF THESE DOCUMENTS THAT ALL EXISTING EQUIPMENT TO REMAIN BE KEPT COMPLETELY OPERABLE DURING CONSTRUCTION AND LEFT COMPLETELY OPERABLE AT THE END OF THE CONSTRUCTION PROCESS.

E. THE ELECTRICAL EQUIPMENT SHOWN IS PROVIDED TO CONVEY THE APPROXIMATE SCOPE OF THE WORK. IT IS THE INTENT OF THESE DOCUMENTS THAT ALL ELECTRICAL EQUIPMENT, RACEWAYS, AND CIRCUITRY IN THE AREA OF WORK BE DEMOLISHED UNLESS FEEDING EXISTING EQUIPMENT TO REMAIN.

F. PERFORM DEMOLITION WORK AS FOLLOWS:
1. DEMOLISH DEVICE OR END OF LINE EQUIPMENT.
2. DEMOLISH RACEWAYS AND CIRCUITRY FEEDING END OF LINE EQUIPMENT (INCLUDING ALL RACEWAYS AND CIRCUITRY ASSOCIATED WITH CONTROLS).
3. LEAVE ALL RACEWAYS AND CIRCUITRY THAT COMPLETELY PASS-THROUGH THE SPACE COMPLETELY OPERABLE BY REROUTING THE CIRCUITS AS REQUIRED.

(X) KEYED NOTES

1. DISCONNECT EXISTING CIRCUITRY FOR UNIT BEING DEMOLISHED. PROTECT CIRCUITRY THROUGHOUT DEMOLITION PHASE AND RECONNECT TO NEW UNIT. SEE E-101 FOR MORE INFORMATION.

2. DEMOLISH EXISTING CIRCUITRY AND CONDUIT BACK TO PANEL HA. SEE E-101 FOR CIRCUITRY.

GRAPHIC SCALE

10' 0 5' 10'

SCALE: 3/32"= 1'-0"

1 ED101 BUILDING 11
1ST FLOOR ELECTRICAL DEMO

SCALE: 3/32" = 1'-0"

PLAN NORTH

THE Johnson-McAdams FIRM P.A.
ARCHITECTS/ENGINEERS PLANNING SURVEYING MANAGEMENT
P.O. BOX 513, GREENWOOD, MISSISSIPPI • (662) 455-6943

NO.	DATE	BY	DESCRIPTION

REVISIONS

BRADEN T. DUKE
ENGINEER
35781
5-4-2026
STATE OF MISSISSIPPI

A-E FIRM	USDA
PROJECT MGR TEL	COR E. WILSON
DESIGNER EJH	EPM E. WILSON
CHECKED BY BTD	SAFETY & HEALTH TBD
JOB # 3925	REAL PROPERTY TBD

USDA Agricultural Research Service

REPAIR HVAC SYSTEM, BULDINGS 1 AND 11 CENTER FOR MEDICAL AGRICULTURAL AND VETENARY ENTOMOLOGY (CMAVE) - GAINESVILLE, FLORIDA

BUILDING 11 - PHASE 1
FIRST FLOOR ELECTRICAL DEMO

PROJECT NO. ---	USDA ARS 5601 SUNNYSIDE AVENUE RM 3-2102 BELTVILLE MD 20705	SHEET ED101
DATE 5/04/2026		21 OF 28

J:\greenwood\2025 Jobs\3925 USDA B1 & B11 HVAC Repair Gainesville FL\07 Working Folder\Elec\B11\PHASE 1\ED101.dwg
May 04, 2026 - 12:47pm

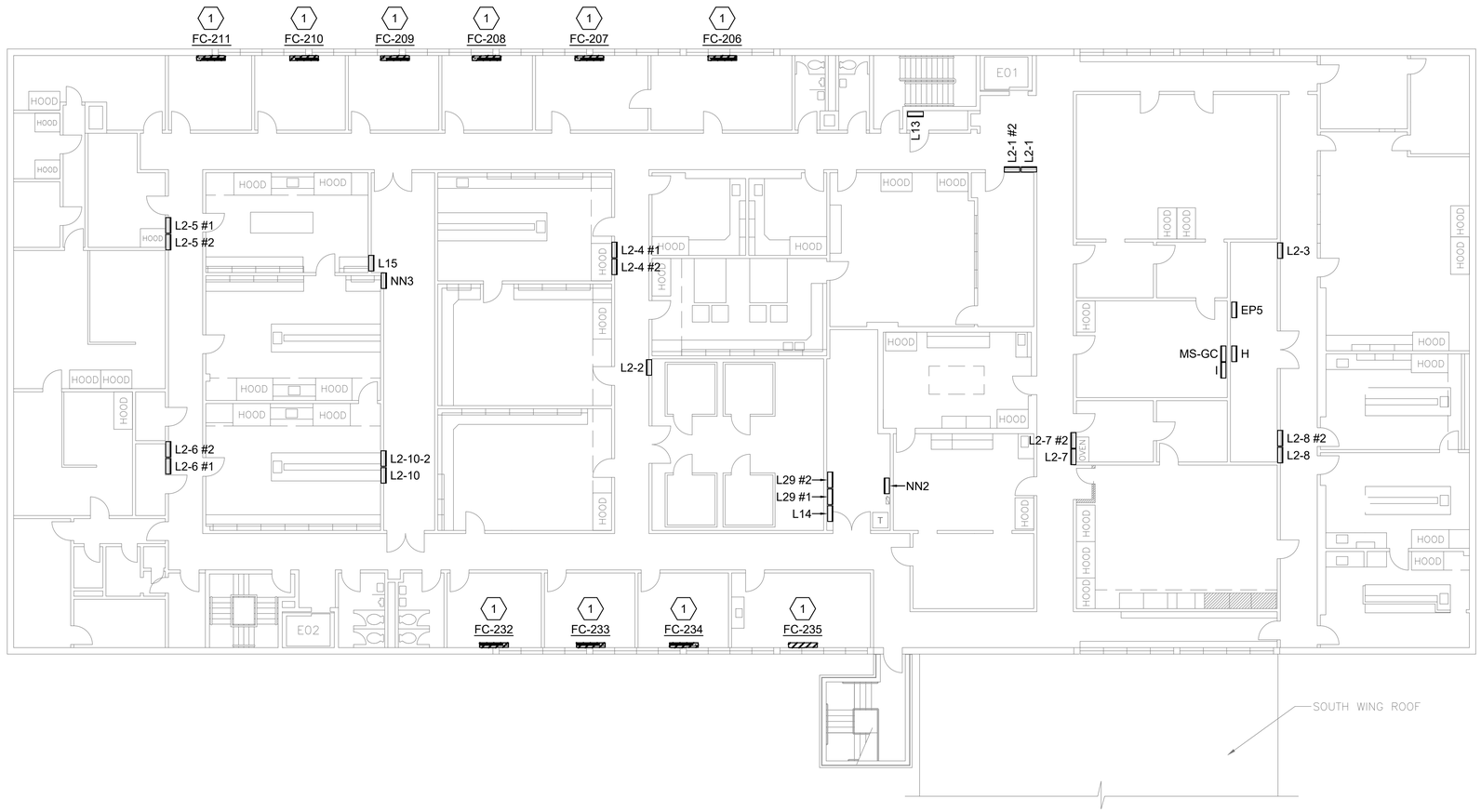

GENERAL NOTES

A. THE DEMOLITION PLAN AND EXISTING CONDITIONS ARE APPROXIMATE. ITEMS TO BE REMOVED ARE DESIGNATED BY HATCHING AND DASHED LINES. OTHER ITEMS ARE INTENDED TO REMAIN IN PLACE UNLESS NOTED OTHERWISE.

(X) KEYED NOTES

1. DISCONNECT EXISTING CIRCUITRY FOR FAN COIL UNIT BEING DEMOLISHED. PROTECT CIRCUITRY THROUGHOUT DEMOLITION PHASE AND RECONNECT TO NEW FAN COIL UNIT. SEE E102 FOR MORE INFORMATION.

GRAPHIC SCALE

10' 0 5' 10'

SCALE: 3/32"= 1'-0"

1 / ED102 BUILDING 11
2ND FLOOR ELECTRICAL DEMO

SCALE: 3/32" = 1'-0"

PLAN NORTH

J:\greenwood\2025 Jobs\3925 USDA B1 & B11 HVAC Repair Gainesville FL\07 Working Folder\Elec\B11\PHASE 1\ED102.dwg
May 04, 2026 - 12:47pm

BRADEN T. DUKE ENGINEER 35781 5-4-2026 STATE OF MISSISSIPPI

THE Johnson-McAdams FIRM P.A.
ARCHITECTS/ENGINEERS PLANNING SURVEYING MANAGEMENT
P.O. BOX 513, GREENWOOD, MISSISSIPPI • (662) 455-6943

NO.	DATE	BY	DESCRIPTION

REVISIONS

A-E FIRM	USDA
PROJECT MGR	COR
TEL	E. WILSON
DESIGNER	EPM
EJH	E. WILSON
CHECKED BY	SAFETY & HEALTH
BTD	TBD
JOB #	REAL PROPERTY
3925	TBD

USDA Agricultural Research Service

REPAIR HVAC SYSTEM, BULDINGS 1 AND 11 CENTER FOR MEDICAL AGRICULTURAL AND VETENARY ENTOMOLOGY (CMAVE) - GAINESVILLE, FLORIDA

BUILDING 11 - PHASE 1
SECOND FLOOR ELECTRICAL DEMO

PROJECT NO.	USDA ARS 5601 SUNNYSIDE AVENUE RM 3-2102 BELTVILLE MD 20705	SHEET
---		ED102
DATE		22 OF 28
5/04/2026		

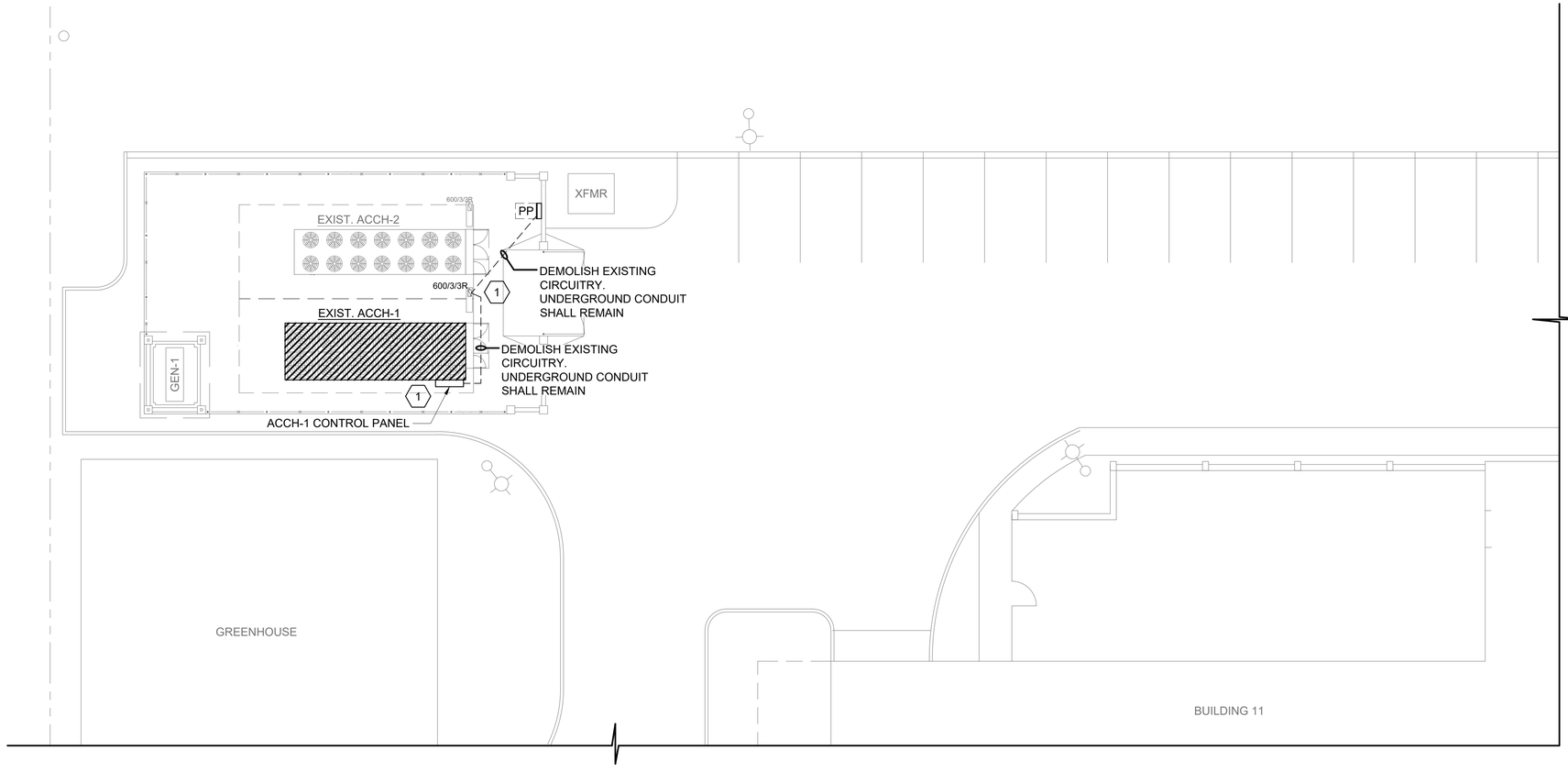

1 ED103 BUILDING 11
EXISTING ELECTRICAL SITE PLAN DEMO
SCALE: 3/32" = 1'-0"

PLAN NORTH

GENERAL NOTES

A. THE DEMOLITION PLAN AND EXISTING CONDITIONS ARE APPROXIMATE. ITEMS TO BE REMOVED ARE DESIGNATED BY HATCHING AND DASHED LINES. OTHER ITEMS ARE INTENDED TO REMAIN IN PLACE UNLESS NOTED OTHERWISE.

(X) KEYED NOTES

1. DEMOLISH EXISTING CIRCUITRY BACK TO PANEL PP. DEMOLISH EXISTING DISCONNECT AND GUTTER. THE EXISTING UNDERGROUND CONDUIT SHALL REMAIN AND BE REUSED.

GRAPHIC SCALE

10' 0 5' 10'
SCALE: 3/32" = 1'-0"

THE Johnson-McAdams FIRM P.A.
ARCHITECTS/ENGINEERS PLANNING SURVEYING MANAGEMENT
P.O. BOX 513, GREENWOOD, MISSISSIPPI • (662) 455-6943

NO.	DATE	BY	DESCRIPTION

REVISIONS

A-E FIRM	USDA
PROJECT MGR: TEL	COR: E. WILSON
DESIGNER: EJH	EPM: E. WILSON
CHECKED BY: BTD	SAFETY & HEALTH: TBD
JOB #: 3925	REAL PROPERTY: TBD

BRADEN T. DUKE
ENGINEER
35781
5-4-2026
STATE OF MISSISSIPPI

USDA Agricultural Research Service

REPAIR HVAC SYSTEM, BULDINGS 1 AND 11 CENTER FOR MEDICAL AGRICULTURAL AND VETENARY ENTOMOLOGY (CMAVE) - GAINESVILLE, FLORIDA

BUILDING 11 - PHASE 1
EXISTING ELECTRICAL SITE PLAN DEMO

PROJECT NO. ---
DATE 5/04/2026

USDA ARS
5601 SUNNYSIDE AVENUE
RM 3-2102
BELTVILLE MD 20705

SHEET ED103
23 OF 28

J:\greenwood\2025 Jobs\3925 USDA B1 & B11 HVAC Repair Gainesville FL\07 Working Folder\Elec\B11\PHASE 1\ED103.dwg
May 04, 2026 - 12:47pm

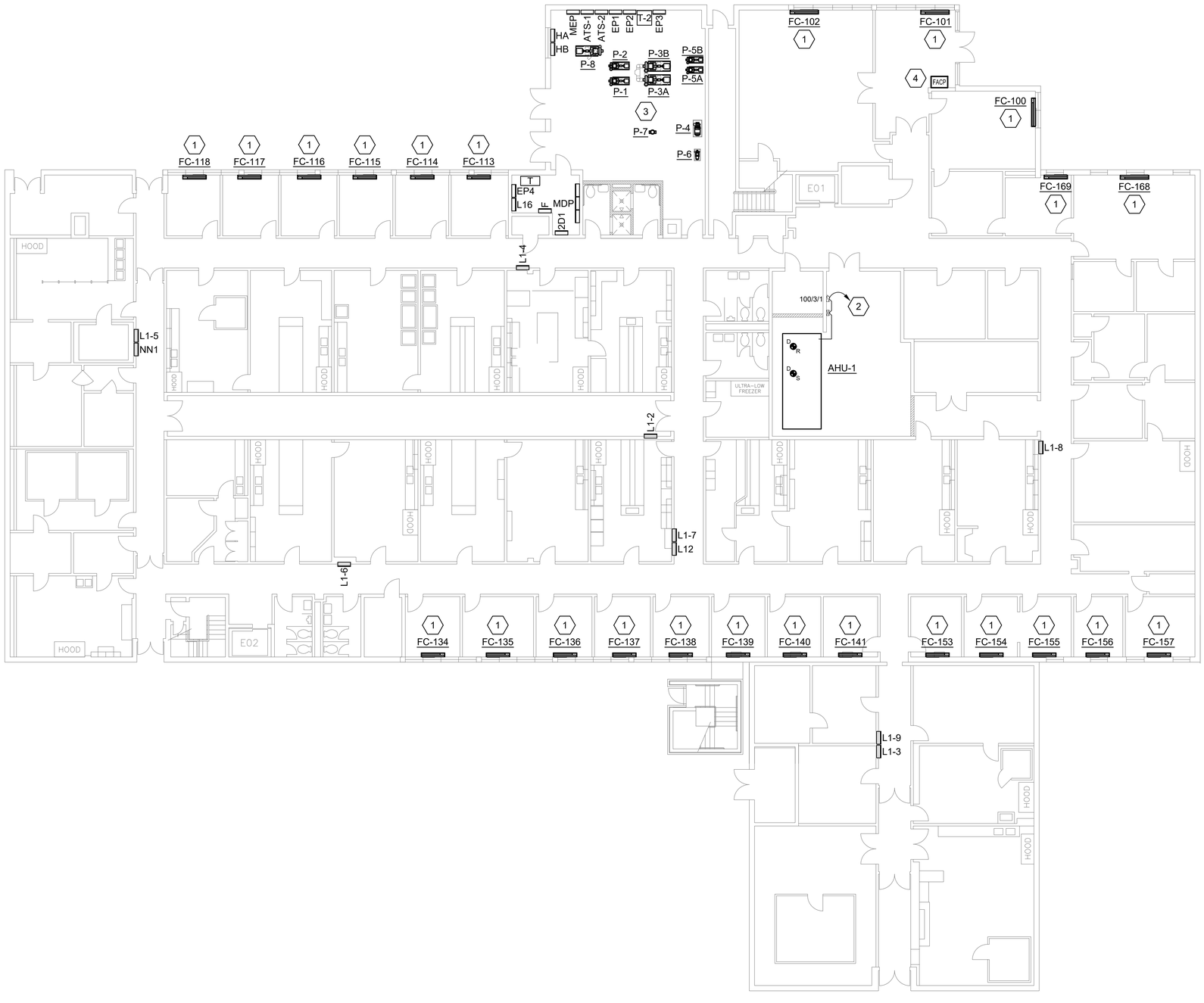

GENERAL NOTES

A. COORDINATE ALL WORK WITH THE MECHANICAL CONTRACTOR PRIOR TO ROUGH-IN.

KEYED NOTES

1. RECONNECT EXISTING CIRCUITRY TO FAN COIL UNIT.
2. THE CONTRACTOR SHALL REPLACE THE EXISTING 50/3 BREAKER IN PANEL HA WITH A 110/3 BREAKER. MATCH EXISTING TYPE AND AIC RATING. THE CONTRACTOR SHALL ROUTE 1-1/2" CONDUIT WITH 3#1, #6(G) TO AHU-1. ROUTE CIRCUITRY THROUGH UNIT VARIABLE FREQUENCY DRIVE PROVIDED BY THE MECHANICAL CONTRACTOR AND INSTALLED BY THE ELECTRICAL CONTRACTOR.
3. RECONNECT EXISTING CIRCUITRY TO NEW PUMP UNITS,
4. APPROXIMATE LOCATION OF EXISTING HONEYWELL FIRE ALARM CONTROL PANEL. PROVIDE NEW SUPPLY AND RETURN DUCT DETECTORS FOR AHU-1.

GRAPHIC SCALE

10' 0 5' 10'
SCALE: 3/32"= 1'-0'

1 E-101 BUILDING 11
1ST FLOOR ELECTRICAL PLAN
SCALE: 3/32" = 1'-0"

PLAN NORTH

BRADEN T. DUKE
REGISTERED PROFESSIONAL ENGINEER
5-4-2026
35781
STATE OF MISSISSIPPI

THE Johnson-McAdams FIRM P.A.
ARCHITECTS/ENGINEERS · PLANNING · SURVEYING · MANAGEMENT
P.O. BOX 513, GREENWOOD, MISSISSIPPI · (662) 455-4943

NO.	DATE	BY	DESCRIPTION

REVISIONS

A-E FIRM	USDA
PROJECT MGR	COR
TEL	E. WILSON
DESIGNER	EPM
EJH	E. WILSON
CHECKED BY	SAFETY & HEALTH
BTD	TBD
JOB #	REAL PROPERTY
3925	TBD

USDA Agricultural Research Service

REPAIR HVAC SYSTEM, BULDINGS 1 AND 11 CENTER FOR MEDICAL AGRICULTURAL AND VETENARY ENTOMOLOGY (CMAVE) - GAINESVILLE, FLORIDA

BUILDING 11 - PHASE 1
FIRST FLOOR ELECTRICAL PLAN

PROJECT NO.	USDA ARS 5601 SUNNYSIDE AVENUE RM 3-2102 BELTVILLE MD 20705	SHEET
---		E-101
DATE		24 OF 28
5/04/2026		

J:\greenwood\2025 Jobs\3925 USDA B1 & B11 HVAC Repair Gainesville FL\07 Working Folder\Elec\B11\PHASE 1\E-101.dwg
May 04, 2026 - 12:47pm

GENERAL NOTES

A. COORDINATE ALL WORK WITH THE MECHANICAL CONTRACTOR PRIOR TO ROUGH-IN.

ⓧ KEYED NOTES

1. RECONNECT EXISTING CIRCUITRY TO FAN COIL UNIT.

GRAPHIC SCALE

10' 0 5' 10'
SCALE: 3/32"= 1'-0"

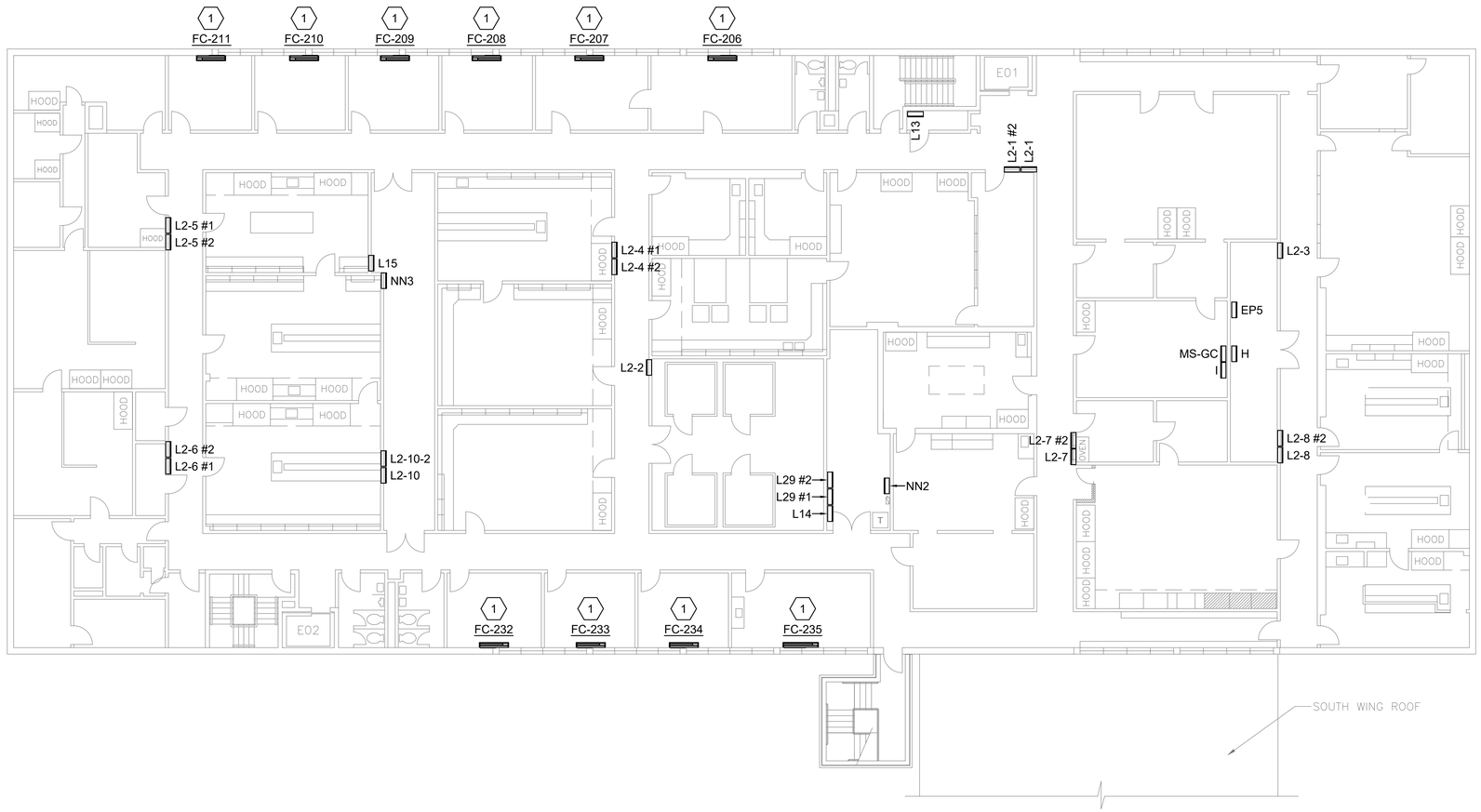

1 / E-102 BUILDING 11
2ND FLOOR ELECTRICAL PLAN
SCALE: 3/32" = 1'-0"

PLAN NORTH

BRADEN T. DUKE
ENGINEER
5-4-2026
35781
STATE OF MISSISSIPPI

THE Johnson-McAdams FIRM P.A.
ARCHITECTS/ENGINEERS PLANNING SURVEYING MANAGEMENT
P.O. BOX 513, GREENWOOD, MISSISSIPPI • (662) 455-6943

NO.	DATE	BY	DESCRIPTION

REVISIONS

A-E FIRM	USDA
PROJECT MGR TEL	COR E. WILSON
DESIGNER EJH	EPM E. WILSON
CHECKED BY BTD	SAFETY & HEALTH TBD
JOB # 3925	REAL PROPERTY TBD

USDA Agricultural Research Service

REPAIR HVAC SYSTEM, BULDINGS 1 AND 11 CENTER FOR MEDICAL AGRICULTURAL AND VETENARY ENTOMOLOGY (CMAVE) - GAINESVILLE, FLORIDA

BUILDING 11 - PHASE 1
SECOND FLOOR ELECTRICAL PLAN

PROJECT NO.	USDA ARS 5601 SUNNYSIDE AVENUE RM 3-2102 BELTVILLE MD 20705	SHEET
---		E-102
DATE 5/04/2026		25 OF 28

J:\greenwood\2025 Jobs\3925 USDA B1 & B11 HVAC Repair Gainesville FL\07 Working Folder\Elec\B11\PHASE 1\E-102.dwg
May 04, 2026 - 12:47pm

GENERAL NOTES

A. COORDINATE ALL WORK WITH THE MECHANICAL CONTRACTOR PRIOR TO ROUGH-IN.

⟨X⟩ KEYED NOTES

1. THE CONTRACTOR SHALL PROVIDE A 600/3/3R NON-FUSED DISCONNECT AND WIREWAY. PROVIDE NEW CIRCUITRY FROM PANEL PP. UTILIZE 2 RUNS OF 3#250KCM, #2(G), EXISTING CONDUIT.
2. REUSE EXISTING 120V CONTROL POWER FROM PANEL CP.
3. REPLACE EXISTING ACCH-1 BREAKER WITH A NEW 600AF/600AT CIRCUIT BREAKER. MATCH EXISTING TYPE AND AIC RATING. EXISTING BREAKER IS A GE SPECTRA RMS SERIES.

GRAPHIC SCALE

10' 0 5' 10'
SCALE: 3/32"= 1'-0'

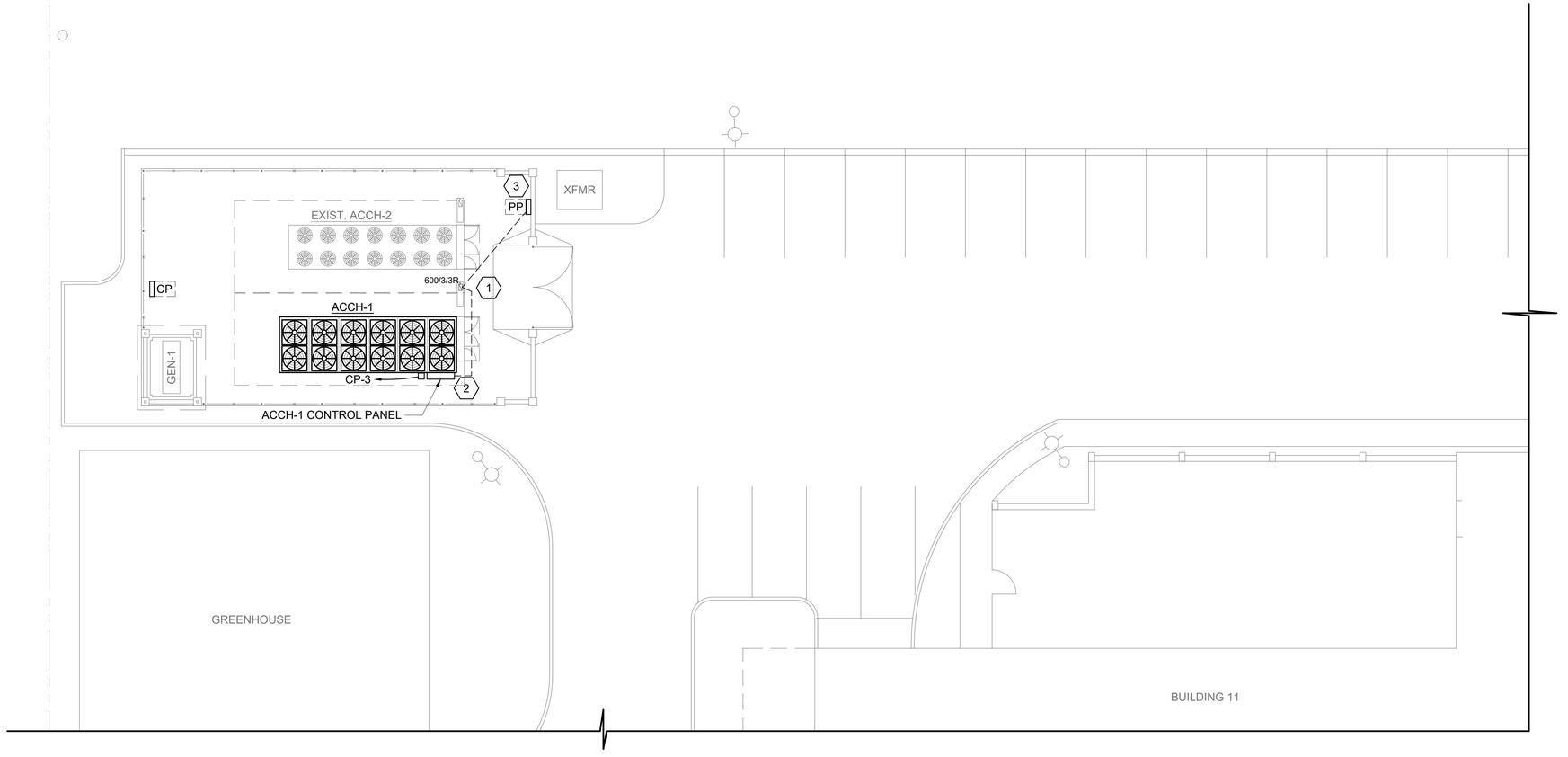

1 E-103 BUILDING 11 ELECTRICAL SITE PLAN
SCALE: 3/32" = 1'-0"

PLAN NORTH

BRADEN T. DUKE 35781 REGISTERED PROFESSIONAL ENGINEER STATE OF MISSISSIPPI
5-4-2026

THE Johnson-McAdams FIRM P.A.
ARCHITECTS/ENGINEERS · PLANNING · SURVEYING · MANAGEMENT
P.O. BOX 513, GREENWOOD, MISSISSIPPI · (662) 455-6943

NO.	DATE	BY	DESCRIPTION

REVISIONS

A-E FIRM	USDA
PROJECT MGR	COR
TEL	E. WILSON
DESIGNER	EPM
EJH	E. WILSON
CHECKED BY	SAFETY & HEALTH
BTD	TBD
JOB #	REAL PROPERTY
3925	TBD

USDA Agricultural Research Service

REPAIR HVAC SYSTEM, BULDINGS 1 AND 11 CENTER FOR MEDICAL AGRICULTURAL AND VETENARY ENTOMOLOGY (CMAVE) - GAINESVILLE, FLORIDA

BUILDING 11 - PHASE 1
ELECTRICAL SITE PLAN

PROJECT NO.	USDA ARS 5601 SUNNYSIDE AVENUE RM 3-2102 BELTVILLE MD 20705	SHEET
---		E-103
DATE		26 OF 28
5/04/2026		

J:\greenwood\2025 Jobs\3925 USDA B1 & B11 HVAC Repair Gainesville FL\07 Working Folder\Elec\B11\PHASE 1\E-103.dwg
May 04, 2026 - 12:47pm

EQUIPMENT SCHEDULE

MARK	VOLTAGE	FLA	MCA	MOCP	PANEL	CONDUCTOR	NOTES
ACCH-1	480V, 3Ø	413A	486A	600A	PANEL PP	2 RUNS OF: 3#250KCM, #1(G), EXISTING CONDUIT	THE CONTRACTOR SHALL REPLACE THE EXISTING BREAKER SERVING ACCH-1 WITH A 600AF/600AT BREAKER. MATCH EXISTING TYPE AND AIC RATING.
AHU-1	480V, 3Ø	52.65A	65.65A	110A	HA-55,57,59	3#1, #6(G), 1-1/2"C.	REPLACE EXISTING BREAKER WITH A 110A/3P BREAKER. MATCH EXISTING TYPE AND AIC RATING.
FC-100	120V, 1Ø	0.66A	3.9A	15A	-	EXISTING CONDUIT AND CIRCUITRY	(1)
FC-101	120V, 1Ø	0.66A	3.9A	15A	-	EXISTING CONDUIT AND CIRCUITRY	(1)
FC-102	120V, 1Ø	0.66A	3.9A	15A	-	EXISTING CONDUIT AND CIRCUITRY	(1)
FC-113	120V, 1Ø	0.66A	3.9A	15A	-	EXISTING CONDUIT AND CIRCUITRY	(1)
FC-114	120V, 1Ø	0.66A	3.9A	15A	-	EXISTING CONDUIT AND CIRCUITRY	(1)
FC-115	120V, 1Ø	0.66A	3.9A	15A	-	EXISTING CONDUIT AND CIRCUITRY	(1)
FC-116	120V, 1Ø	0.66A	3.9A	15A	-	EXISTING CONDUIT AND CIRCUITRY	(1)
FC-117	120V, 1Ø	0.66A	3.9A	15A	-	EXISTING CONDUIT AND CIRCUITRY	(1)
FC-118	120V, 1Ø	0.66A	3.9A	15A	-	EXISTING CONDUIT AND CIRCUITRY	(1)
FC-134	120V, 1Ø	0.66A	3.9A	15A	-	EXISTING CONDUIT AND CIRCUITRY	(1)
FC-135	120V, 1Ø	0.66A	3.9A	15A	-	EXISTING CONDUIT AND CIRCUITRY	(1)
FC-136	120V, 1Ø	0.66A	3.9A	15A	-	EXISTING CONDUIT AND CIRCUITRY	(1)
FC-137	120V, 1Ø	0.66A	3.9A	15A	-	EXISTING CONDUIT AND CIRCUITRY	(1)
FC-138	120V, 1Ø	0.66A	3.9A	15A	-	EXISTING CONDUIT AND CIRCUITRY	(1)
FC-139	120V, 1Ø	0.66A	3.9A	15A	-	EXISTING CONDUIT AND CIRCUITRY	(1)
FC-140	120V, 1Ø	0.66A	3.9A	15A	-	EXISTING CONDUIT AND CIRCUITRY	(1)
FC-141	120V, 1Ø	0.66A	3.9A	15A	-	EXISTING CONDUIT AND CIRCUITRY	(1)
FC-153	120V, 1Ø	0.66A	3.9A	15A	-	EXISTING CONDUIT AND CIRCUITRY	(1)
FC-154	120V, 1Ø	0.66A	3.9A	15A	-	EXISTING CONDUIT AND CIRCUITRY	(1)
FC-155	120V, 1Ø	0.66A	3.9A	15A	-	EXISTING CONDUIT AND CIRCUITRY	(1)
FC-156	120V, 1Ø	0.66A	3.9A	15A	-	EXISTING CONDUIT AND CIRCUITRY	(1)
FC-157	120V, 1Ø	0.66A	3.9A	15A	-	EXISTING CONDUIT AND CIRCUITRY	(1)
FC-168	120V, 1Ø	0.66A	3.9A	15A	-	EXISTING CONDUIT AND CIRCUITRY	(1)
FC-169	120V, 1Ø	0.66A	3.9A	15A	-	EXISTING CONDUIT AND CIRCUITRY	(1)
FC-206	120V, 1Ø	0.66A	3.9A	15A	-	EXISTING CONDUIT AND CIRCUITRY	(1)
FC-207	120V, 1Ø	0.66A	3.9A	15A	-	EXISTING CONDUIT AND CIRCUITRY	(1)
FC-208	120V, 1Ø	0.66A	3.9A	15A	-	EXISTING CONDUIT AND CIRCUITRY	(1)
FC-209	120V, 1Ø	0.66A	3.9A	15A	-	EXISTING CONDUIT AND CIRCUITRY	(1)
FC-210	120V, 1Ø	0.66A	3.9A	15A	-	EXISTING CONDUIT AND CIRCUITRY	(1)
FC-211	120V, 1Ø	0.66A	3.9A	15A	-	EXISTING CONDUIT AND CIRCUITRY	(1)
FC-232	120V, 1Ø	0.66A	3.9A	15A	-	EXISTING CONDUIT AND CIRCUITRY	(1)
FC-233	120V, 1Ø	0.66A	3.9A	15A	-	EXISTING CONDUIT AND CIRCUITRY	(1)
FC-234	120V, 1Ø	0.66A	3.9A	15A	-	EXISTING CONDUIT AND CIRCUITRY	(1)
FC-235	120V, 1Ø	0.66A	3.9A	15A	-	EXISTING CONDUIT AND CIRCUITRY	(1)
P-1	480V, 3Ø	11A (7.5HP)	14A	20A	HA-38,40,42	EXISTING CONDUIT AND CIRCUITRY	THE CONTRACTOR SHALL UTILIZE EXISTING STARTER/VFD. RECONFIGURE SETTINGS FOR NEW PUMP.
P-2	480V, 3Ø	11A (7.5HP)	14A	20A	HA-44,46,48	EXISTING CONDUIT AND CIRCUITRY	THE CONTRACTOR SHALL UTILIZE EXISTING STARTER/VFD. RECONFIGURE SETTINGS FOR NEW PUMP.
P-3A	480V, 3Ø	27A (20HP)	34A	60A	HA-19,21,23	EXISTING CONDUIT AND CIRCUITRY	THE CONTRACTOR SHALL UTILIZE EXISTING STARTER/VFD. RECONFIGURE SETTINGS FOR NEW PUMP.
P-3B	480V, 3Ø	27A (20HP)	34A	60A	HA-20,22,24	EXISTING CONDUIT AND CIRCUITRY	THE CONTRACTOR SHALL UTILIZE EXISTING STARTER/VFD. RECONFIGURE SETTINGS FOR NEW PUMP.
P-4	480V, 3Ø	7.6A (5HP)	10A	15A	HA-49,51,53	EXISTING CONDUIT AND CIRCUITRY	THE CONTRACTOR SHALL UTILIZE EXISTING STARTER/VFD. RECONFIGURE SETTINGS FOR NEW PUMP.
P-5A	480V, 3Ø	11A (7.5HP)	14A	20A	HA-37,39,41	EXISTING CONDUIT AND CIRCUITRY	THE CONTRACTOR SHALL UTILIZE EXISTING STARTER/VFD. RECONFIGURE SETTINGS FOR NEW PUMP.
P-5B	480V, 3Ø	11A (7.5HP)	14A	20A	HA-31,33,35	EXISTING CONDUIT AND CIRCUITRY	THE CONTRACTOR SHALL UTILIZE EXISTING STARTER/VFD. RECONFIGURE SETTINGS FOR NEW PUMP.
P-6	480V, 3Ø	1.6A (3/4HP)	2A	15A	HA-50,52,54	EXISTING CONDUIT AND CIRCUITRY	THE CONTRACTOR SHALL UTILIZE EXISTING STARTER/VFD. RECONFIGURE SETTINGS FOR NEW PUMP.
P-7	480V, 3Ø	1.1A (1/3HP)	1.5A	15A	HB-20,22,24	EXISTING CONDUIT AND CIRCUITRY	THE CONTRACTOR SHALL UTILIZE EXISTING STARTER/VFD. RECONFIGURE SETTINGS FOR NEW PUMP.
P-8	480V, 3Ø	11A (7.5HP)	14A	20A	HA-56,58,60	EXISTING CONDUIT AND CIRCUITRY	THE CONTRACTOR SHALL UTILIZE EXISTING STARTER/VFD. RECONFIGURE SETTINGS FOR NEW PUMP.

(X) KEYED NOTES

1. REUSE EXISTING CIRCUITRY. VERIFY CIRCUIT CAPACITY AND DO NOT EXCEED 15A PER CIRCUIT. IF EXISTING CIRCUIT IS OVERLOADED, UTILIZE A SPARE 20/1 BREAKER AND PROVIDE NEW CIRCUITRY. (TYPICAL OF ALL FAN COIL UNITS)

THE Johnson-McAdams FIRM P.A.
ARCHITECTS/ENGINEERS · PLANNING · SURVEYING · MANAGEMENT
P.O. BOX 513, GREENWOOD, MISSISSIPPI · (662) 455-6943

NO.	DATE	BY	DESCRIPTION

REVISIONS

BRADEN T. DUKE
MISSISSIPPI PROFESSIONAL ENGINEER
35781
5-4-2026
STATE OF MISSISSIPPI

A-E FIRM	USDA
PROJECT MGR	COR
TEL	E. WILSON
DESIGNER	EPM
EJH	E. WILSON
CHECKED BY	SAFETY & HEALTH
BTD	TBD
JOB #	REAL PROPERTY
3925	TBD

USDA

USDA Agricultural Research Service

REPAIR HVAC SYSTEM, BULDINGS 1 AND 11 CENTER FOR MEDICAL AGRICULTURAL AND VETENARY ENTOMOLOGY (CMAVE) - GAINESVILLE, FLORIDA

BUILDING 11 - PHASE 1
EQUIPMENT SCHEDULE

PROJECT NO.		SHEET
---	USDA ARS 5601 SUNNYSIDE AVENUE RM 3-2102 BELTVILLE MD 20705	E-501
DATE		27 OF 28
5/04/2026		

J:\greenwood\2025 Jobs\3925 USDA B1 & B11 HVAC Repair Gainesville FL\07 Working Folder\Elec\B11\PHASE 1\E-501.dwg
May 04, 2026 - 12:47pm

PANEL **HA**

LOCATION: **RM 111**
VOLT: **480Y/277V, 3Ø, 4W**
BUS: **800A**

LUG LOCATION: **BOTTOM FEED**
MAIN BUS: **MAIN LUGS ONLY**
MOUNTING: **SURFACE**

PANELBOARD AIC RATING (A): **22,000**

EXIST. NO.	CIRCUIT NO.	BREAKER AMPS	BREAKER POLES	DESCRIPTION	PHASE LOAD (KVA) A		B		C		DESCRIPTION	BREAKER AMPS	BREAKER POLES	CIRCUIT NO.	EXIST. NO.
1	1	225	3	HB (EX.)	0.0	0.0					ATS-1/EP-1 (EX.)	225	3	2	2
	3	-	-	-			0.0	0.0			-	-	-	4	
	5	-	-	-					0.0	0.0	-	-	-	6	
3	7	150	3	H1 (EX.)	0.0	0.0					ATS-2/EP-3 (EX.)	225	3	8	4
	9	-	-	-			0.0	0.0			-	-	-	10	
	11	-	-	-					0.0	0.0	-	-	-	12	
5	13	100	3	H2 (EX.)	0.0	0.0					H3 (EX.)	100	3	14	6
	15	-	-	-			0.0	0.0			-	-	-	16	
	17	-	-	-					0.0	0.0	-	-	-	18	
7	19	50	3	PUMP P-3A	7.5	7.5					PUMP P-3B	50	3	20	8
	21	-	-	-			7.5	7.5			-	-	-	22	
	23	-	-	-					7.5	7.5	-	-	-	24	
9	25	40	3	AHU-2 (EX.)	0.0	0.0					AHU-3 (EX.)	40	3	26	10
	27	-	-	-			0.0	0.0			-	-	-	28	
	29	-	-	-					0.0	0.0	-	-	-	30	
11	31	30	3	PUMP P-5B	3.0	0.0					H4 (EX.)	30	3	32	12
	33	-	-	-			3.0	0.0			-	-	-	34	
	35	-	-	-					3.0	0.0	-	-	-	36	
13	37	30	3	PUMP P-5A	3.0	3.0					PUMP P-1	30	3	38	14
	39	-	-	-			3.0	3.0			-	-	-	40	
	41	-	-	-					3.0	3.0	-	-	-	42	
15	43	20	3	AHU-4 (EX.)	0.0	3.0					PUMP P-2	30	3	44	16
	45	-	-	-			0.0	3.0			-	-	-	46	
	47	-	-	-					0.0	3.0	-	-	-	48	
17	49	15	3	PUMP P-4	2.1	0.4					PUMP P-6	15	3	50	18
	51	-	-	-			2.1	0.4			-	-	-	52	
	53	-	-	-					2.1	0.4	-	-	-	54	
19	55	110	3	AHU-1	9.6	3.0					PUMP P-8	30	3	56	20
	57	-	-	-			9.6	3.0			-	-	-	58	
	59	-	-	-					9.6	3.0	-	-	-	60	
21	61	20	3	SPARE (EX.)	0.0	0.0					SPACE	N.A.	N.A.	62	22
	63	-	-	-			0.0	0.0			SPACE	N.A.	N.A.	64	
	65	-	-	-					0.0	0.0	SPACE	N.A.	N.A.	66	
TOTAL					42.3		42.3		42.3						

PANEL **HB**

LOCATION: **RM 111**
VOLT: **480Y/277V, 3Ø, 4W**
BUS: **225A**

LUG LOCATION: **BOTTOM FEED**
MAIN BUS: **MAIN LUGS ONLY**
MOUNTING: **SURFACE**

PANELBOARD AIC RATING (A): **0**

EXIST. NO.	CIRCUIT NO.	BREAKER AMPS	BREAKER POLES	DESCRIPTION	PHASE LOAD (KVA) A		B		C		DESCRIPTION	BREAKER AMPS	BREAKER POLES	CIRCUIT NO.	EXIST. NO.
1	1	15	3	SPARE (EX.)	0.0	0.0					BOILER FAN (EX.)	20	3	2	2
	3	-	-	-			0.0	0.0			-	-	-	4	
	5	-	-	-					0.0	0.0	-	-	-	6	
3	7	N.A.	N.A.	SPACE	0.0	0.0					VAC. PUMPS 1 & 2 (EX.)	30	3	8	4
	9	N.A.	N.A.	SPACE			0.0	0.0			-	-	-	10	
	11	N.A.	N.A.	SPACE					0.0	0.0	-	-	-	12	
5	13	N.A.	N.A.	SPACE	0.0	0.0					SPARE (EX.)	20	3	14	6
	15	N.A.	N.A.	SPACE			0.0	0.0			-	-	-	16	
	17	N.A.	N.A.	SPACE					0.0	0.0	-	-	-	18	
7	19	N.A.	N.A.	SPACE	0.0	0.3					PUMP P-7	15	3	20	8
	21	N.A.	N.A.	SPACE			0.0	0.3			-	-	-	22	
	23	N.A.	N.A.	SPACE					0.0	0.3	-	-	-	24	
	25	N.A.	N.A.	SPARE	0.0	0.0					SPACE	N.A.	N.A.	26	
	27	N.A.	N.A.	SPACE			0.0	0.0			SPACE	N.A.	N.A.	28	
	29	N.A.	N.A.	SPACE					0.0	0.0	SPACE	N.A.	N.A.	30	
	31	N.A.	N.A.	SPACE	0.0	0.0					SPACE	N.A.	N.A.	32	
	33	N.A.	N.A.	SPACE			0.0	0.0			SPACE	N.A.	N.A.	34	
	35	N.A.	N.A.	SPACE					0.0	0.0	SPACE	N.A.	N.A.	36	
	37	N.A.	N.A.	SPACE	0.0	0.0					SPACE	N.A.	N.A.	38	
	39	N.A.	N.A.	SPACE			0.0	0.0			SPACE	N.A.	N.A.	40	
	41	N.A.	N.A.	SPACE					0.0	0.0	SPACE	N.A.	N.A.	42	
TOTAL					0.3		0.3		0.3						

J:\greenwood\2025 Jobs\3925 USDA B1 & B11 HVAC Repair Gainesville FL\07 Working Folder\Elec\B11\PHASE 11E-701.dwg
May 04, 2026 - 12:47pm

BRADEN T. DUKE
REGISTERED PROFESSIONAL ENGINEER
ENGINEER
5-4-2026
35781
STATE OF MISSISSIPPI

THE Johnson-McAdams FIRM P.A.
ARCHITECTS/ENGINEERS · PLANNING · SURVEYING · MANAGEMENT
P.O. BOX 513, GREENWOOD, MISSISSIPPI • (662) 455-4343

NO.	DATE	BY	DESCRIPTION

REVISIONS

A-E FIRM	USDA
PROJECT MGR	TEL
DESIGNER	EJH
CHECKED BY	BTD
JOB #	3925
COR	E. WILSON
EPM	E. WILSON
SAFETY & HEALTH	TBD
REAL PROPERTY	TBD

USDA Agricultural Research Service

REPAIR HVAC SYSTEM, BULDINGS 1 AND 11 CENTER FOR MEDICAL AGRICULTURAL AND VETENARY ENTOMOLOGY (CMAVE) - GAINESVILLE, FLORIDA

BUILDING 11 - PHASE 1
PANEL SCHEDULES

PROJECT NO.	USDA ARS 5601 SUNNYSIDE AVENUE RM 3-2102 BELTVILLE MD 20705	SHEET
----		E-701
DATE		28 OF 28
5/04/2026		