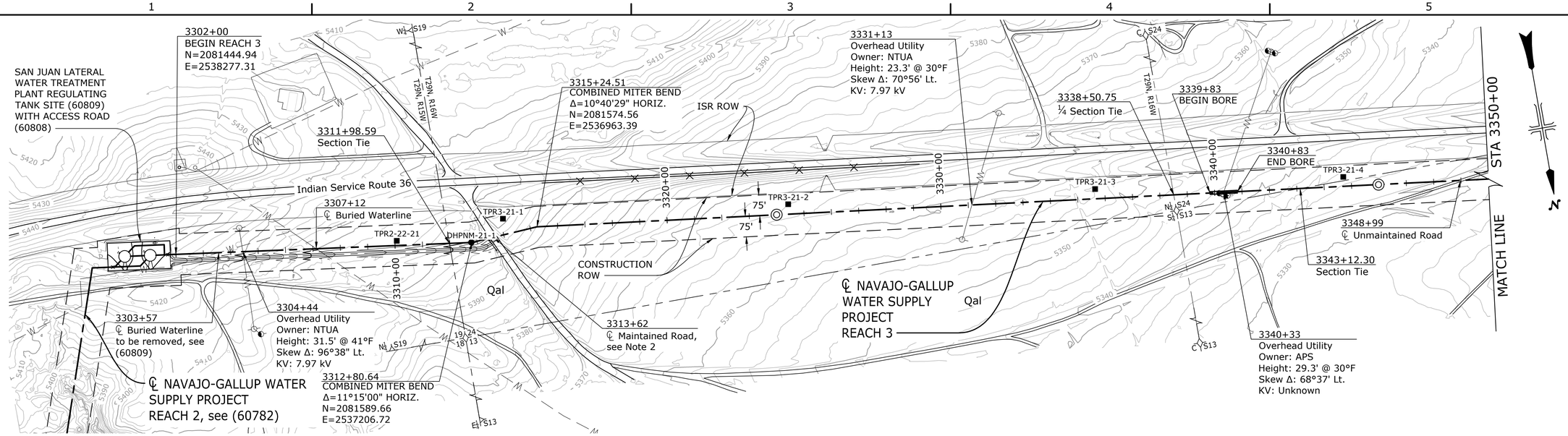

PLAN

0 200' 400'

OPEN-CUT CROSSINGS		
Station	Road / Wash	% Compaction
3313+28 to 3313+95	Maintained Road	95
3348+63 to 3349+35	Unmaintained Road	95

NOTES

1. General Notes, Symbols, Abbreviations, and Pipe Classification apply to all plan and profile drawings. (60249)
2. Maintained road requires gravel and asphalt replacement, see Specifications.
3. For bored crossing details, see (62468).

CONSTRUCTION ROW			
Station		Width (Ft.)	
Start	End	Left	Right
3302+00	3370+00	75	75

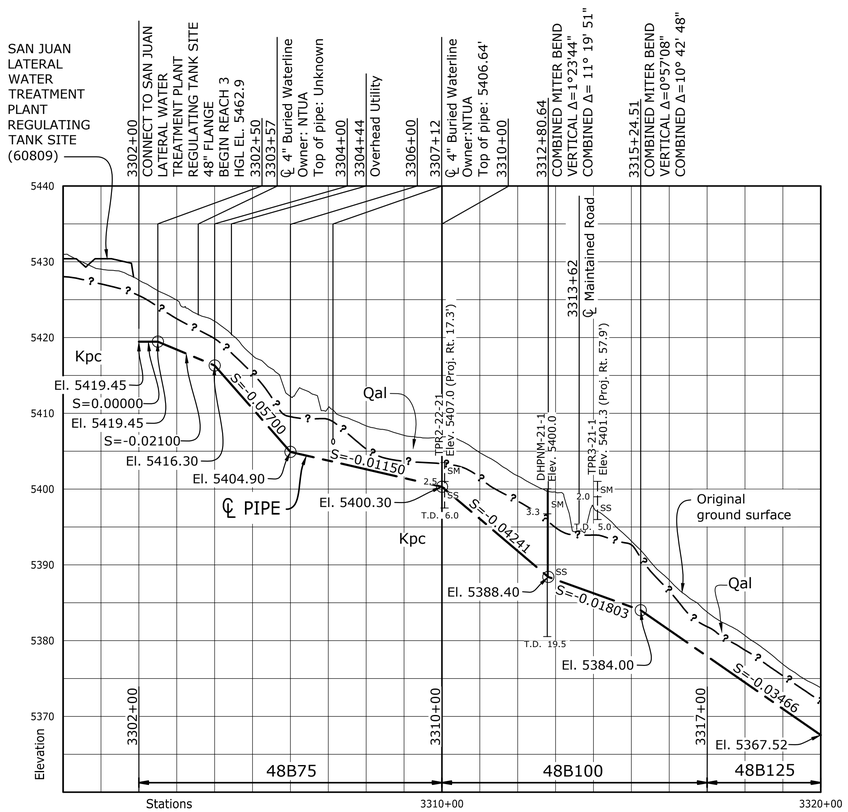

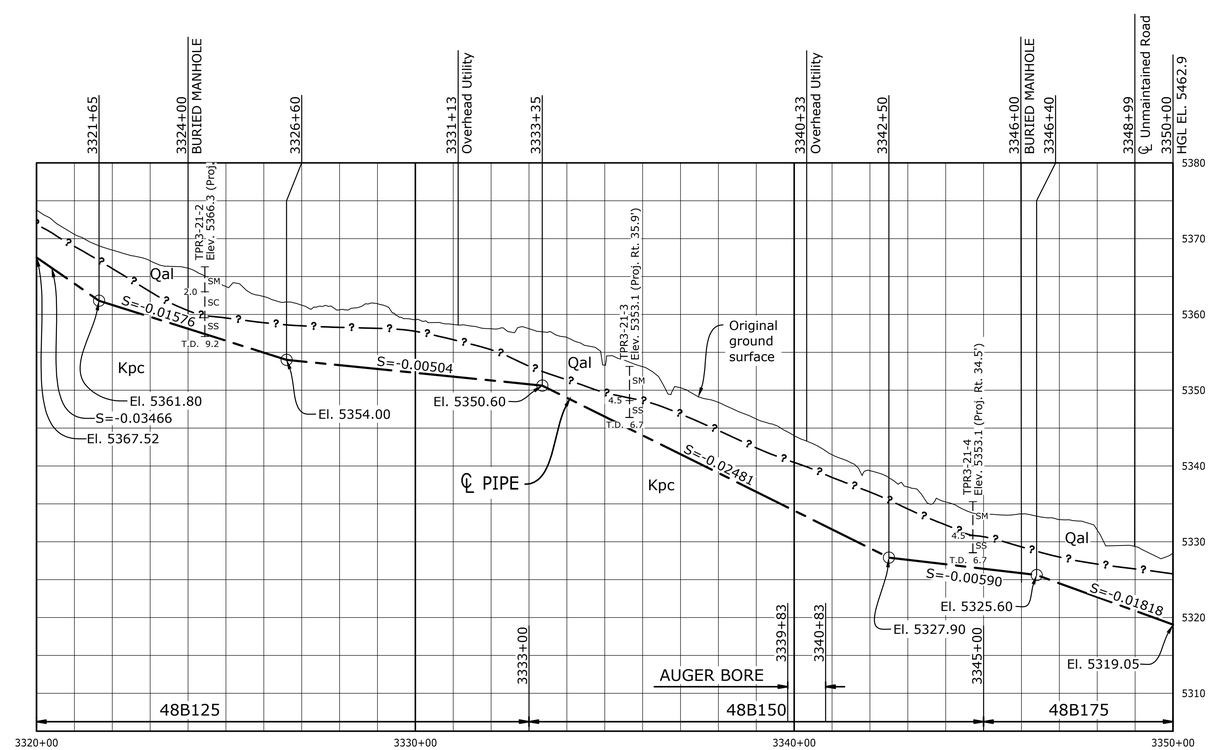

PROFILE

GEOLOGY

TECH. APPR. Chris Beyer
SUBMITTED Kristopher Graham
APPROVED Chris Beyer Supervisory Geologist

BUREAU OF RECLAMATION

ALWAYS THINK SAFETY

U.S. DEPARTMENT OF THE INTERIOR
BUREAU OF RECLAMATION
NAVAJO-GALLUP WATER SUPPLY PROJECT
NEW MEXICO

SAN JUAN LATERAL - BLOCK 2 - 3

REACH 3 - LINE PIPE

REV NO			
1	D	2026-05-18	Removed auger bore for powerline crossing at Station 3331+13
		Marner, Andrew (Andy) J P.E.	

J. DeHaan DESIGNED
J. DeHaan DRAWN
K. Pelzer CHECKED
Marner, Andrew (Andy) J P.E. TECH. APPR.
Steen, Timothy M APPROVED PEER REVIEWER

DENVER, CO 2026-04-13

PLAN AND PROFILE

BEGINNING TO STA. 3350+00

1695-D-60783

SHEET

Released

LAST SAVED DATE 2026-05-18 15:45:45
LAST SAVED BY AMARNER

CAD SYSTEM AutoCAD Civil 3D 2025 (LMS TECH)
CAD FILENAME 1695-D-60783-RD-1.DWG

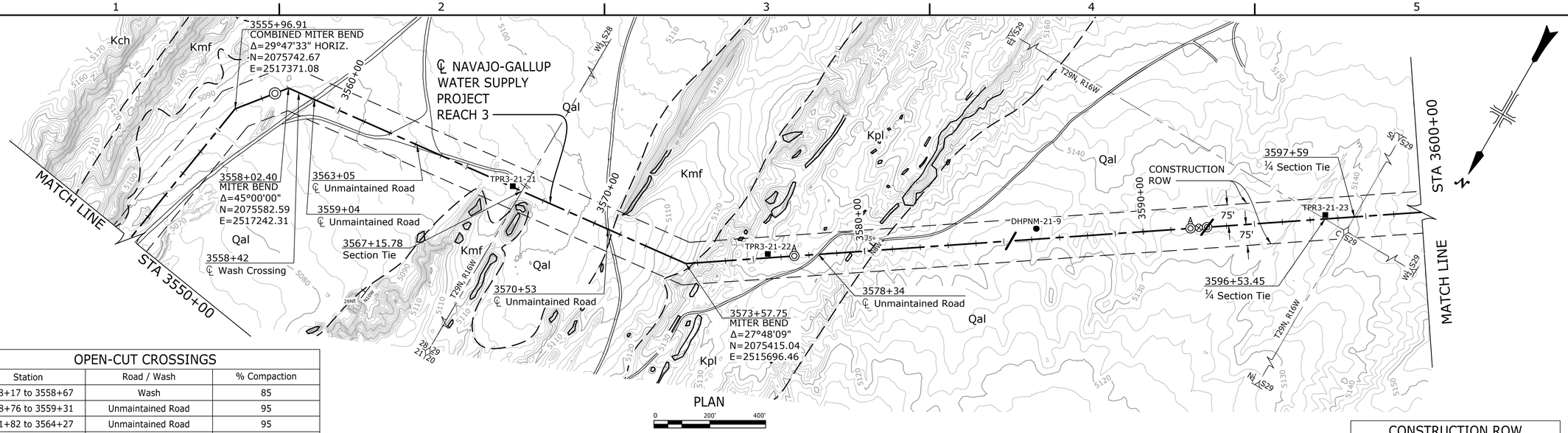

OPEN-CUT CROSSINGS		
Station	Road / Wash	% Compaction
3558+17 to 3558+67	Wash	85
3558+76 to 3559+31	Unmaintained Road	95
3561+82 to 3564+27	Unmaintained Road	95
3570+28 to 3570+76	Unmaintained Road	95
3578+09 to 3578+85	Unmaintained Road	95

CONSTRUCTION ROW			
Station		Width (Ft.)	
Start	End	Left	Right
3542+29	3710+50	75	75

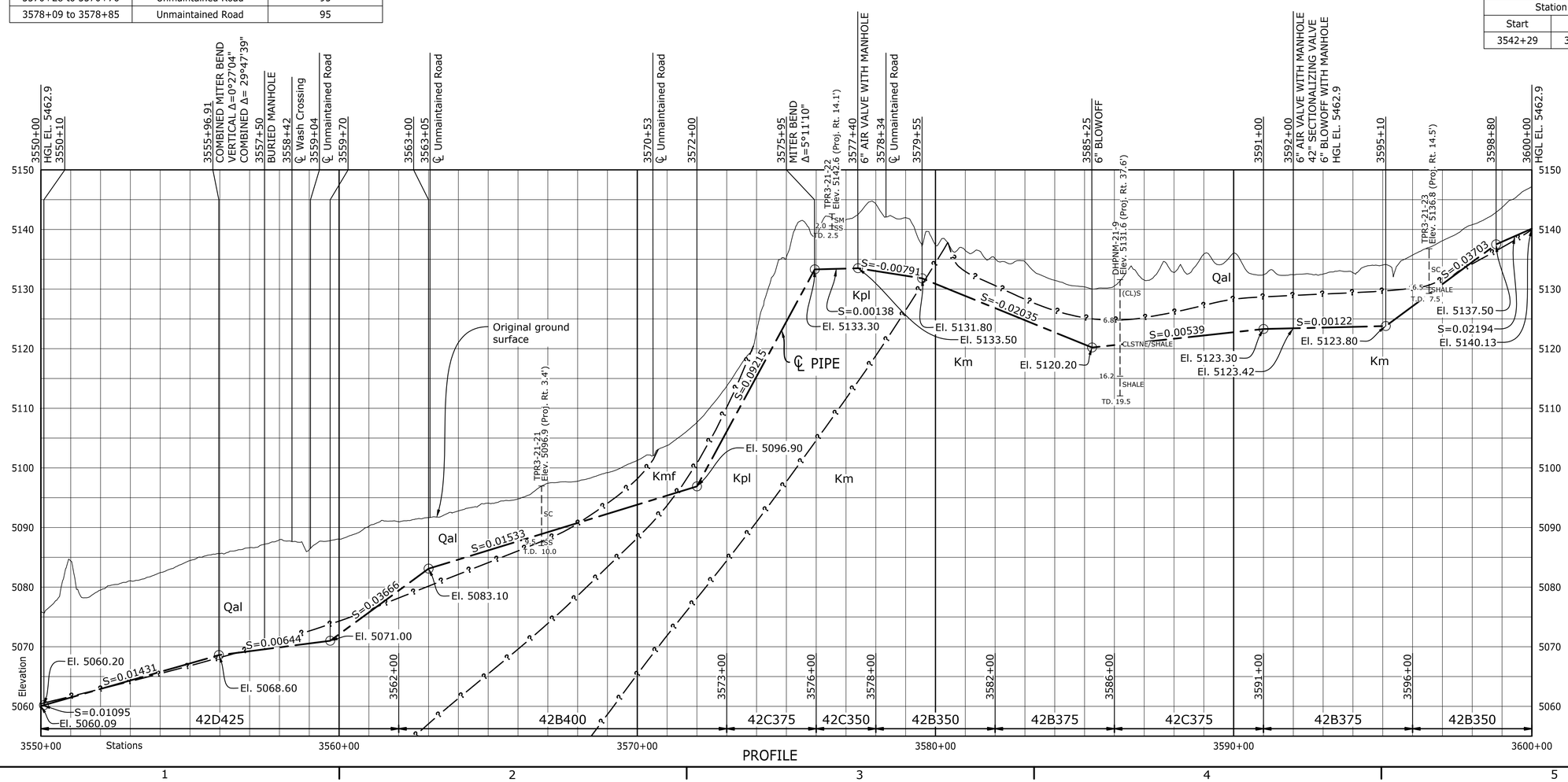

BUREAU OF RECLAMATION

ALWAYS THINK SAFETY

U.S. DEPARTMENT OF THE INTERIOR
BUREAU OF RECLAMATION
NAVAJO-GALLUP WATER SUPPLY PROJECT
NEW MEXICO

SAN JUAN LATERAL - BLOCK 2 - 3

REACH 3 - LINE PIPE

REV NO		
1	2026-05-18 Marner, Andrew (Andy) J P.E.	D Added missing miter bend angle information for Station 3575+95.

J. DeHaan DESIGNED
J. DeHaan DRAWN
K. Pelzer CHECKED
Marner, Andrew (Andy) J P.E. TECH. APPR.
Steen, Timothy M APPROVED PEER REVIEWER
DENVER, CO 2026-04-13

GEOLOGY
TECH. APPR. Chris Beyer
SUBMITTED Kristopher Graham
APPROVED Chris Beyer Supervisory Geologist

PLAN AND PROFILE

STA. 3550+00 TO STA. 3600+00

1695-D-60788

SHEET

Released

LAST SAVED DATE 2026-05-18
LAST SAVED BY AMARNER

CAD SYSTEM AutoCAD Civil 3D (LMS TECH)
CAD FILENAME 1695-D-60788-RD-6.DWG

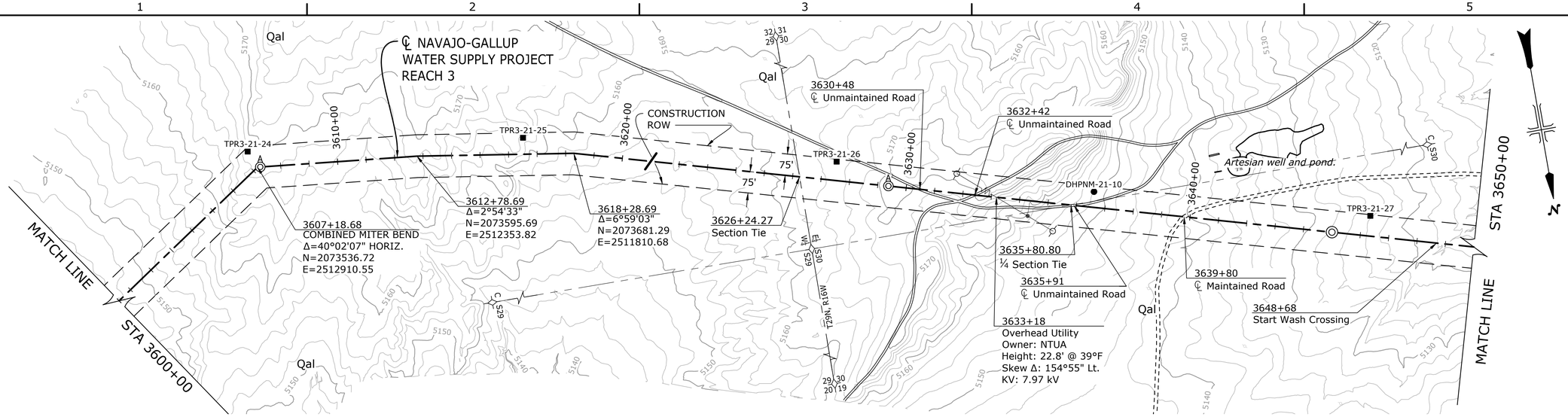

PLAN

0 200' 400'

OPEN-CUT CROSSINGS		
Station	Road / Wash	% Compaction
3630+16 to 3630+80	Unmaintained Road	95
3635+52 to 3636+30	Unmaintained Road	95
3639+50 to 3640+10	Maintained Road	95
3648+68 to 3653+18	Wash, See Note 1	85

NOTES

1. Wash Crossing continues on next page.
2. Maintained road requires gravel replacement, see Specifications.

CONSTRUCTION ROW			
Station		Width (Ft.)	
Start	End	Left	Right
3542+29	3710+50	75	75

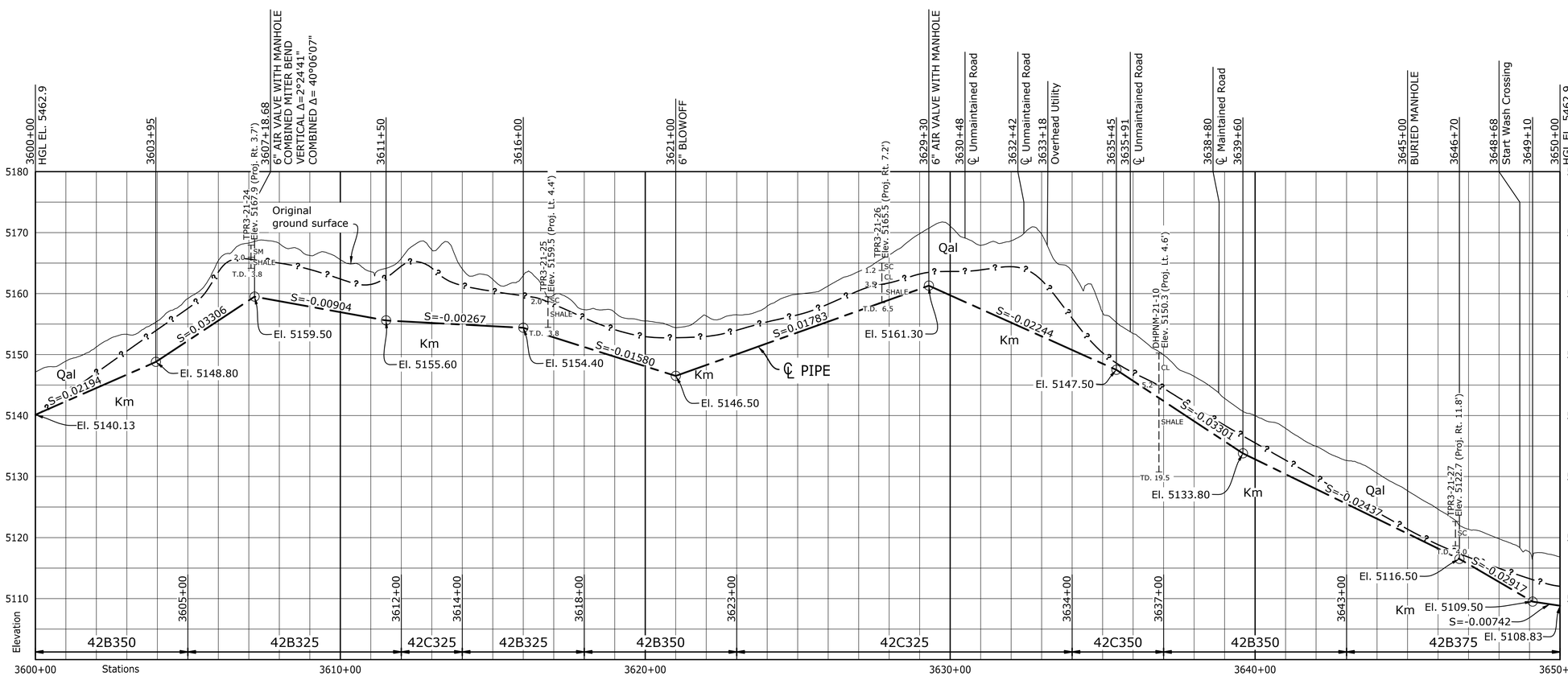

PROFILE

BUREAU OF RECLAMATION

ALWAYS THINK SAFETY

U.S. DEPARTMENT OF THE INTERIOR
BUREAU OF RECLAMATION
NAVAJO-GALLUP WATER SUPPLY PROJECT
NEW MEXICO

SAN JUAN LATERAL - BLOCK 2 - 3

REACH 3 - LINE PIPE

REV NO		
1	2026-05-18 Marner, Andrew (Andy) J P.E.	D Removed auger bore for powerline crossing at Station 3633+18.

J. DeHaan DESIGNED
J. DeHaan DRAWN
K. Pelzer CHECKED
Marner, Andrew (Andy) J P.E. TECH. APPR.
Steen, Timothy M APPROVED PEER REVIEWER
DENVER, CO 2026-04-13

GEOLOGY
TECH. APPR. Chris Beyer
SUBMITTED Kristopher Graham
APPROVED Chris Beyer Supervisory Geologist

PLAN AND PROFILE

STA. 3600+00 TO STA. 3650+00

1695-D-60789

SHEET

Released

LAST SAVED DATE 2026-05-14
LAST SAVED BY AMARNER

CAD SYSTEM AutoCAD 25.0S (LMS TECH)
CAD FILENAME 1695-D-60789-RD-7.DWG

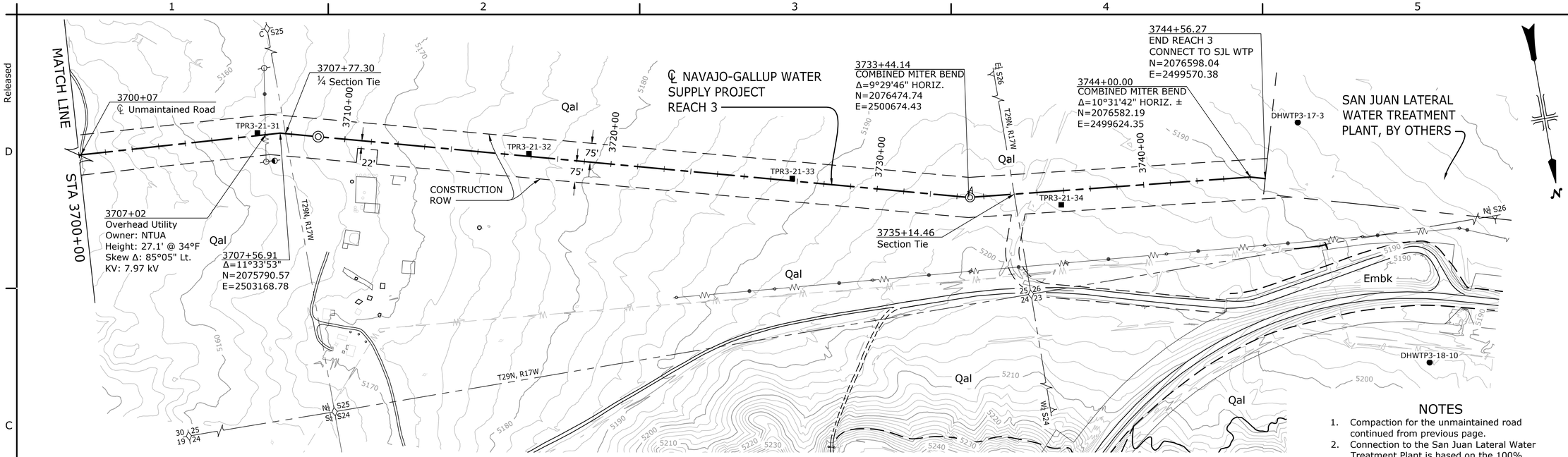

PLAN

0 200' 400'

OPEN-CUT CROSSINGS		
Station	Road / Wash	% Compaction
3699+83 to 3700+31	Unmaintained Road, See Note 1	95

CONSTRUCTION ROW			
Station		Width (Ft.)	
Start	End	Left	Right
3542+29	3710+50	75	75
3710+50	3711+25	75	22**
3711+25	3744+56.27	75	75

**Temporary safety fencing and monitoring required, see Specifications

HGL ELEVATION TABLE	
FLOW (MGD)	ELEVATION (FT)
3.1	5446.3
6.2	5443.8
19.5	5416.2
46.5	5274.7

NOTES

1. Compaction for the unmaintained road continued from previous page.
2. Connection to the San Juan Lateral Water Treatment Plant is based on the 100% design prepared by Jacobs dated February 2026. Contractor to measure and verify final angles and slope.
3. Working HGL for Station 3744+56.27 based on flows listed in HGL Elevation Table below are based on a minimum water level of 16.3 feet (El. 5447.2) in the San Juan Lateral Water Treatment Plant Regulating Tank at the beginning of Reach 3.
4. Trench box required between Station 3710+00 to 3712+00.

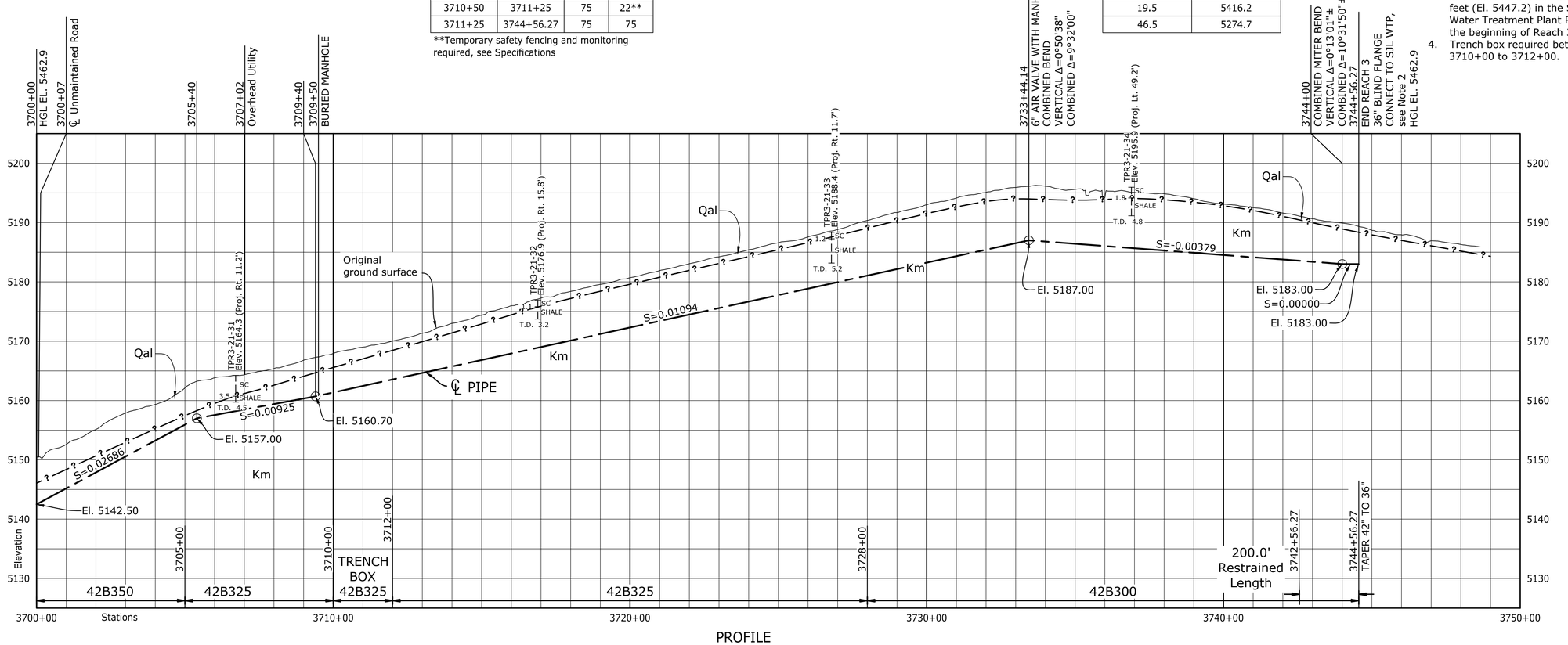

PROFILE

BUREAU OF RECLAMATION

ALWAYS THINK SAFETY

U.S. DEPARTMENT OF THE INTERIOR
BUREAU OF RECLAMATION
NAVAJO-GALLUP WATER SUPPLY PROJECT
NEW MEXICO

SAN JUAN LATERAL - BLOCK 2 - 3

REACH 3 - LINE PIPE

REV NO			
1	D	2026-05-18 Marner, Andrew (Andy) J P.E.	Removed sewer bore for powerline crossing at Station 3707+02.

J. DeHaan DESIGNED
J. DeHaan DRAWN
K. Pelzer CHECKED
Marner, Andrew (Andy) J P.E. TECH. APPR.
Steen, Timothy M APPROVED PEER REVIEWER

DENVER, CO 2026-04-13

GEOLOGY
TECH. APPR. Chris Beyer
SUBMITTED Kristopher Graham
APPROVED Chris Beyer Supervisory Geologist

PLAN AND PROFILE

STA. 3700+00 TO END

1695-D-60794
SHEET

Released

LAST SAVED DATE 2026-05-15
LAST SAVED BY AMARNER

CAD SYSTEM AutoCAD Civil 3D (LMS TECH)
CAD FILENAME 1695-D-60794-RD-9.DWG

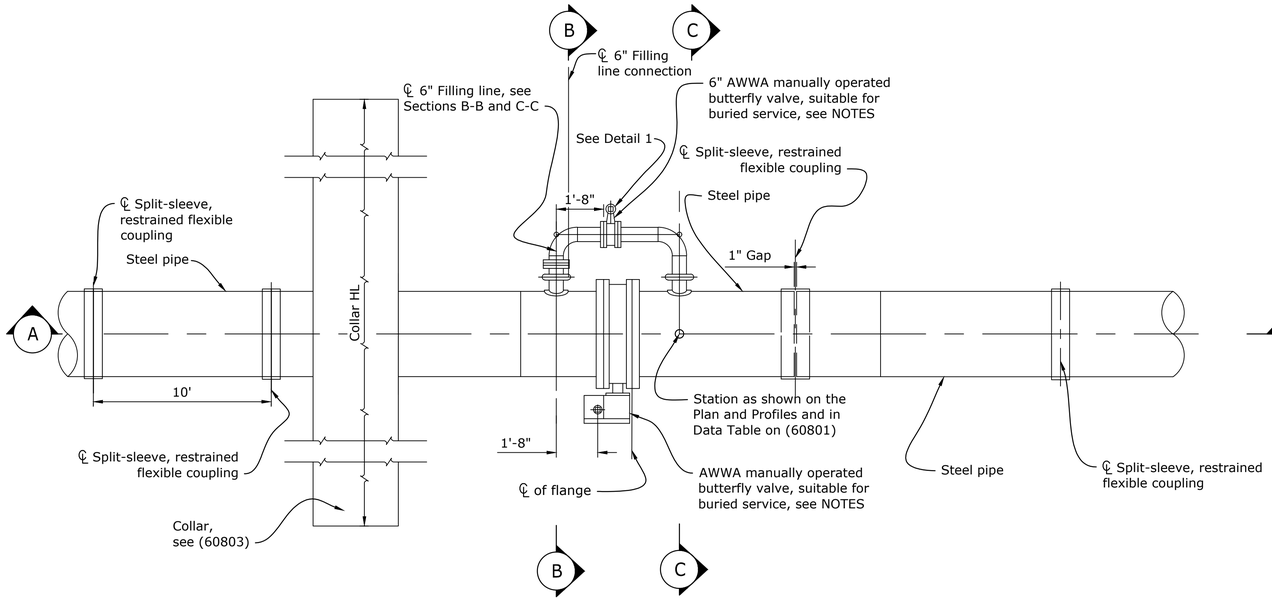

PLAN

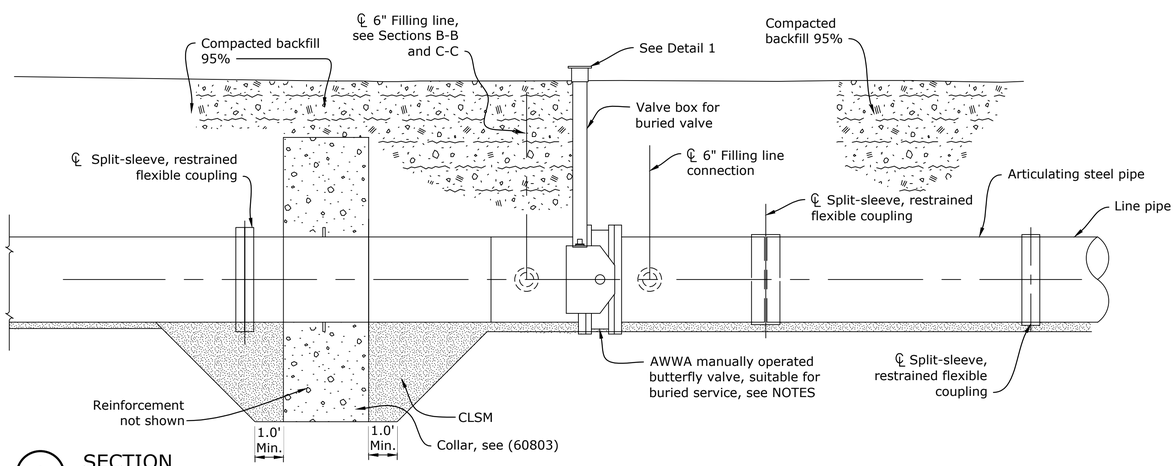

A SECTION

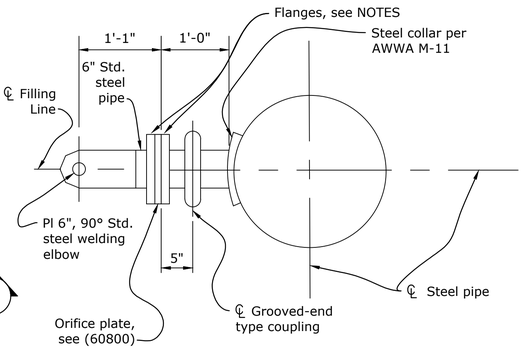

B SECTION

OPERATING CRITERIA

1. High performance Bypass butterfly valve shall be fully open when operated.
2. Excavation around blocking shall not occur when the pipeline is under hydrostatic pressure.

NOTES

1. Drawing not to scale.
2. See Specifications on exact label text required for each valve.
3. All sectionalizing valves will require a bypass.
4. For pipe trench earthwork details, see (60795).
5. The minimum steel cylinder thickness for the section of line pipe with the valve outlet shall be the thickness of the steel line pipe. For the steel line pipe thickness see the Specifications.
6. Piping next to butterfly valves may require 1" oversizing so that the applied interior lining will not reduce the inside dimension to a smaller size which could prevent the butterfly valve from opening. Valve bypass piping shall be epoxy lined.
7. For collar details, see (60803).
8. Flange class shall meet pressure requirement designated by adjacent line pipe. Flange drilling shall match mating flange.
9. For Flange and Valve ratings, see notes (60799).
10. Dissimilar metals require a dielectric coupling for electrical isolation.

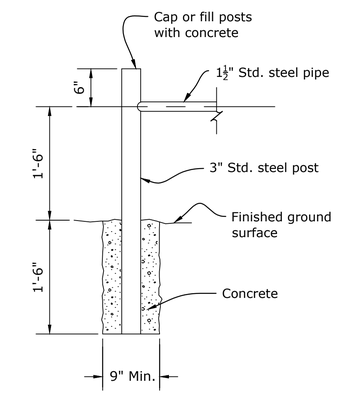

TYPICAL BARRIER POST

INSTALLATION DETAIL

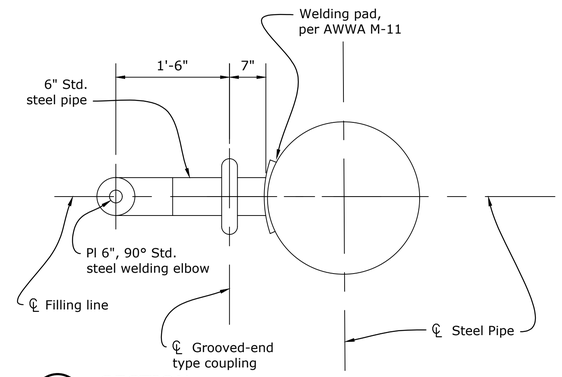

C SECTION

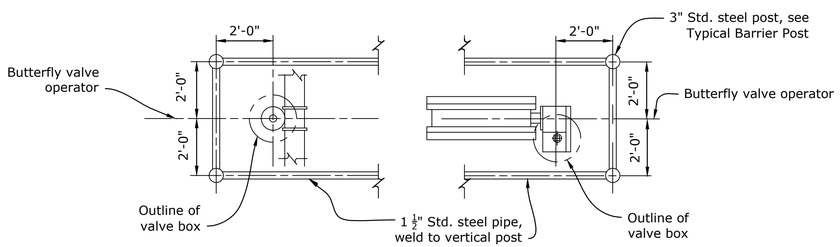

WELDED RECTANGULAR BARRIER

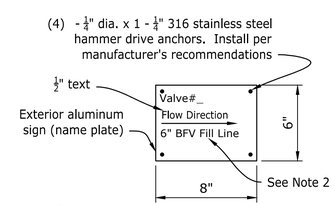

2 VALVE ID PLATE

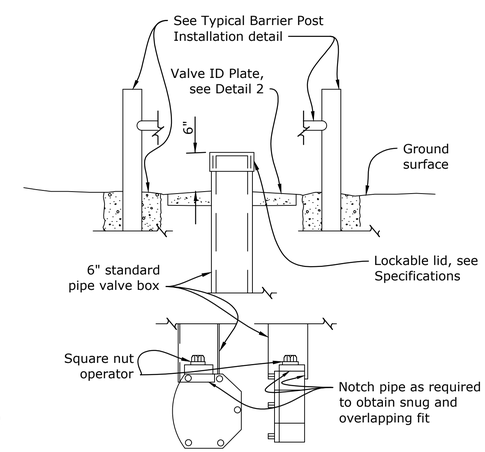

1 DETAIL

(PROFILE VIEW)

BUREAU OF RECLAMATION

ALWAYS THINK SAFETY

U.S. DEPARTMENT OF THE INTERIOR
BUREAU OF RECLAMATION
NAVAJO-GALLUP WATER SUPPLY PROJECT
NEW MEXICO

SAN JUAN LATERAL - BLOCK 2 - 3

LINE PIPE

REV NO	DATE	DESCRIPTION	BY
1	2026-05-18	Revised valve id plate anchors to stainless steel	Marner, Andrew (Andy) J P.E.

A. MARNER
DESIGNED
A. MARNER
DRAWN
K. PELZER
CHECKED
Marner, Andrew (Andy) J P.E.
TECH. APPR.
Steen, Timothy M
APPROVED
PEER REVIEWER
DENVER, CO 2026-04-13

SECTIONALIZING VALVE INSTALLATION

PLAN, SECTIONS AND DETAILS

1695-D-60802

SHEET

Released

LAST SAVED DATE 2026-05-18
LAST SAVED BY AMARNER

CAD SYSTEM AutoCAD Civil 3D (LMS TECH)
CAD FILENAME 1695-D-60802-RD-1.DWG

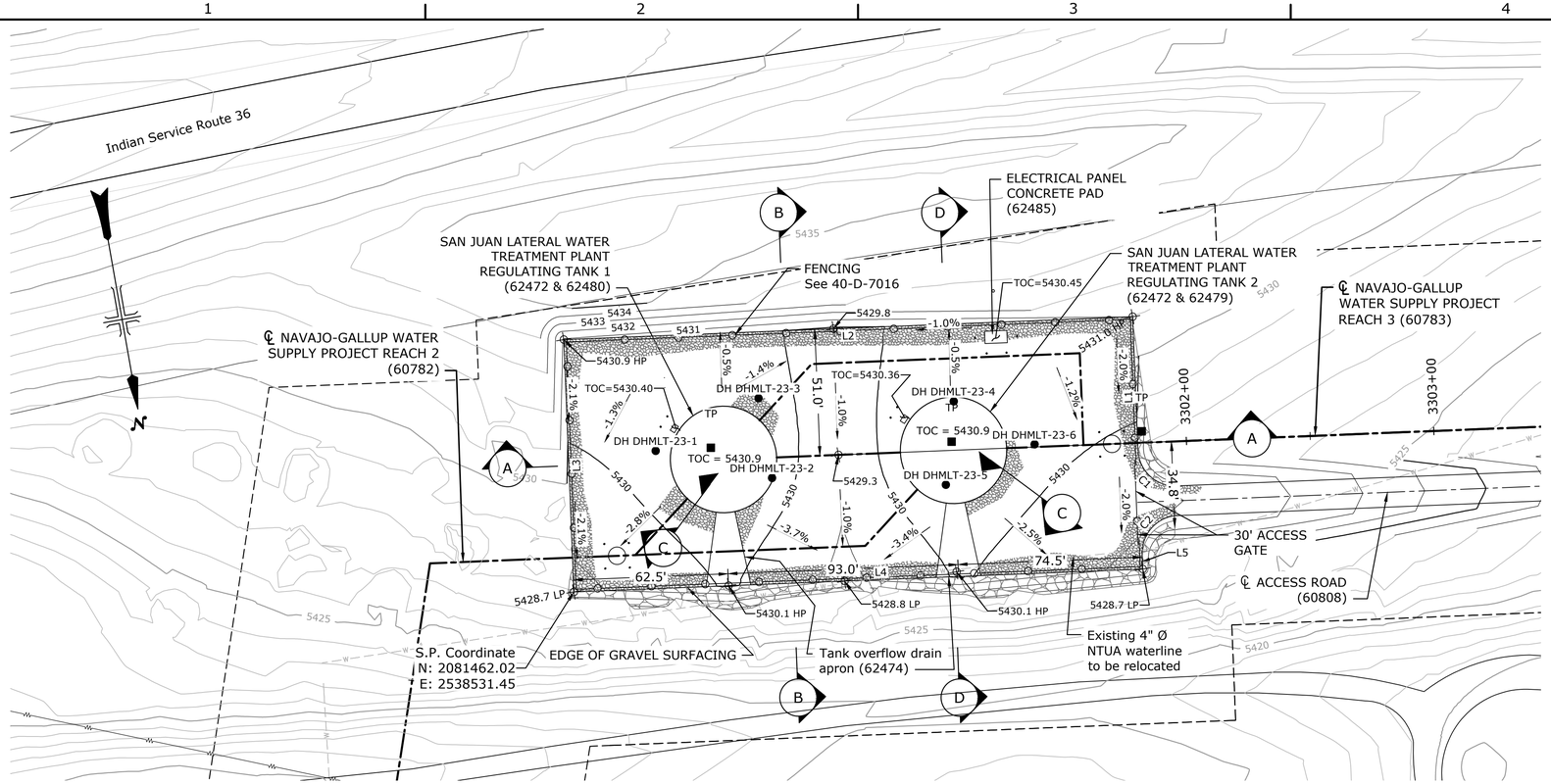

PLAN - SAN JUAN LATERAL WATER TREATMENT PLANT REGULATING TANK SITE

0 30' 60'

Parcel Line Table		
Line #	Length	Direction
L1	54.00	S7° 41' 55"W
L2	229.93	S82° 18' 05"E
L3	102.00	N7° 41' 55"E
L4	229.93	N82° 18' 05"W
L5	6.00	S7° 41' 55"W

Curve Table					
Curve #	Length	Radius	Delta △	Chord Direction	Chord Length
C1	23.56	15.00	90°00'00"	S37° 18' 05"E	21.21
C2	23.56	15.00	90°00'00"	S52° 41' 55"W	21.21

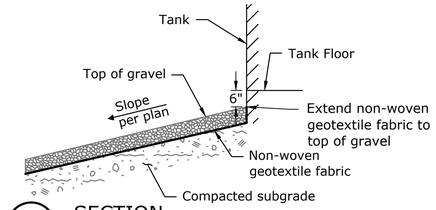

C SECTION
NOT TO SCALE

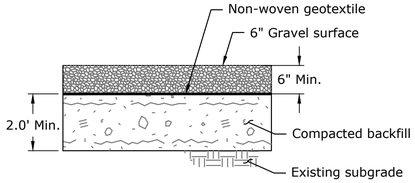

GRAVEL SURFACING DETAIL
NOT TO SCALE

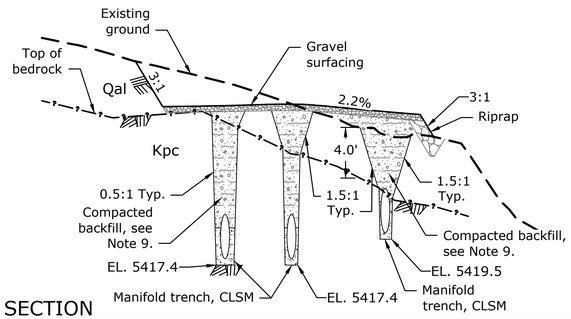

B SECTION
HOR: 1" = 30' VERT: 1"= 6'

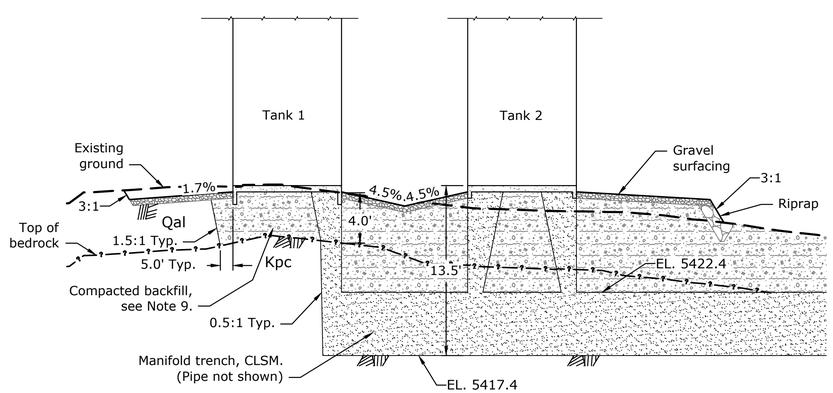

A SECTION
HOR: 1" = 30' VERT: 1"= 6'

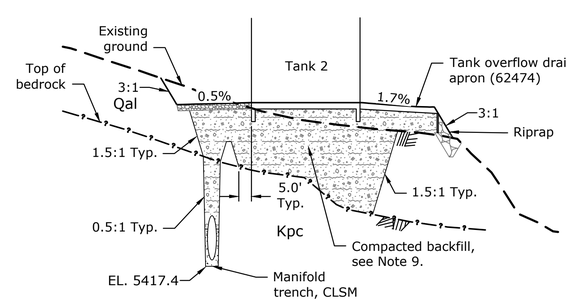

D SECTION
HOR: 1" = 30' VERT: 1"= 6'

LEGEND

Gravel

Riprap

ABBREVIATIONS

ME - Match existing
HP - High point
LP - Low point
GB - Grade break
FFE - Finished floor elevation
FES - Flared end section
TOB - Top of berm
TOC - Top of concrete

NOTES

1. See (62474) for concrete tank overflow and drain apron information.
2. See 40-D-60002 for guard post details.
3. Line and curve table dimensions and bearings are labeled to the gravel yard extents. All linear measurement is in ground.
4. All control points are shown in New Mexico State Plane Coordinate System, West Zone (NAD83) horizontal datum. A grid to ground scale factor of 1.000286319627 was used.
5. Contractor to verify existing grades and utilities prior to construction in accordance with the Specifications. Notify COR of any conflicts or discrepancies immediately.
6. Yard elevations are shown to top of gravel unless otherwise specified.
7. All vertical elevations are based on the NAVD88 vertical datum.
8. All contours shown are based off of lidar data provided by Atlantic and survey elevations provided by the Four Corners Construction Office.
9. Excavation and compacted backfill beneath the tank footprints shall extend to the surface of competent bedrock or at least 1 foot beneath the lowest foundation element, whichever is greater.

BUREAU OF RECLAMATION

ALWAYS THINK SAFETY

U.S. DEPARTMENT OF THE INTERIOR
BUREAU OF RECLAMATION
NAVAJO-GALLUP WATER SUPPLY PROJECT
NEW MEXICO

SAN JUAN LATERAL - BLOCK 2 - 3

SAN JUAN LATERAL WATER TREATMENT PLANT REGULATING TANKS

A. Marner DESIGNED
A. Marner DRAWN
K. Pelzer CHECKED
Marner, Andrew (Andy) J P.E. TECH. APPR.
Steen, Timothy M APPROVED Supervisory Civil Engineer PEER REVIEWER

DENVER, CO 2026-05-19

SITE AND GRADING PLAN

SECTIONS

1695-D-60809
SHEET

LAST SAVED DATE 2026-05-19
LAST SAVED BY AMARNER

CAD SYSTEM AutoCAD Civil 3D (LMS TECH)
CAD FILENAME 1695-D-60809-RD-2.DWG

Released

REACH 2 MITER BENDS

P.I. STATION	TYPE OF PLACEMENT	HEAD (ft)	ANGLE	DIRECTION	D (IN)	MIN. COVER (FT)	L1 (FT)	W (FT)
2002+23.34	ROCK	125	30° 0' 52"	HORIZONTAL	48	10.8	10	2
2003+59.56	ROCK	125	73° 13' 38"	HORIZONTAL	48	16.2	10	6
2006+38.32	NON ROCK	125	41° 19' 56"	HORIZONTAL	48	9.3	10	5
2007+22.00	NON ROCK	125	9° 23' 37"	CONVEX DOWN	48	9.8	10	1
2015+61.67	NON ROCK	150	46° 3' 32"	HORIZONTAL	48	14.5	10	5
2020+61.81	NON ROCK	200	33° 45' 9"	COMBINED	48	6.2	10	9
2025+24.48	ROCK	200	43° 38' 50"	HORIZONTAL	48	9.4	10	5
2027+85.00	ROCK	200	10° 11' 6"	CONVEX UP	48	6.9	10	5
2029+64.00	ROCK	200	13° 17' 23"	CONVEX DOWN	48	12.7	10	2
2032+32.00	NON ROCK	200	9° 55' 5"	CONVEX UP	48	6.9	10	6
2061+13.33	NON ROCK	275	40° 4' 59"	HORIZONTAL	48	3.8	20	15
2067+65.12	ROCK	275	11° 19' 6"	COMBINED	48	4.7	10	2
2071+00.00	ROCK	275	13° 53' 39"	CONVEX UP	48	15.4	10	7
2072+00.00	NON ROCK	300	8° 38' 19"	CONVEX DOWN	48	8.2	10	3
2076+81.69	NON ROCK	300	10° 31' 16"	HORIZONTAL	48	5	10	4
2085+00.00	NON ROCK	300	10° 36' 1"	HDD BEND	48	6.3	85	95
2095+00.00	NON ROCK	300	11° 12' 3"	HDD BEND	48	8	75	84
2103+16.11	NON ROCK	300	30° 37' 46"	HORIZONTAL	48	3.8	15	12
2109+56.30	NON ROCK	300	30° 27' 39"	COMBINED	48	9	15	N.A.
2136+77.13	NON ROCK	350	40° 9' 56"	COMBINED	48	7.3	20	17
2149+65.46	NON ROCK	350	17° 26' 52"	HORIZONTAL	48	8.7	10	6
2153+60.95	NON ROCK	375	23° 5' 22"	COMBINED	48	7.5	10	10
2156+30.42	NON ROCK	375	25° 47' 21"	HORIZONTAL	48	5.4	15	14
2157+30.00	NON ROCK	375	7° 59' 1"	HDD BEND	48	6.4	90	103
2180+40.00	NON ROCK	475	11° 8' 26"	HDD BEND	48	7.1	110	134
2181+25.65	NON ROCK	475	33° 8' 24"	HORIZONTAL	48	7.2	20	19
2186+30.47	NON ROCK	475	26° 45' 6"	HORIZONTAL	48	6.8	20	16
2190+40.00	NON ROCK	475	8° 25' 35"	CONVEX DOWN	48	9.2	10	4
2190+80.00	NON ROCK	475	8° 6' 7"	CONVEX UP	48	3.7	25	26
2237+90.00	ROCK	175	10° 32' 5"	HDD BEND	48	8	45	35
2239+75.00	ROCK	175	6° 51' 20"	CONVEX DOWN	48	7.9	10	1
2241+30.74	ROCK	175	17° 35' 6"	COMBINED	48	6.3	10	3
2244+92.00	ROCK	175	9° 4' 19"	CONVEX DOWN	48	7.5	10	1
2252+06.00	ROCK	175	9° 35' 59"	CONVEX DOWN	48	5.7	10	1
2253+37.00	ROCK	175	7° 47' 14"	CONVEX UP	48	6.9	10	4
2255+90.00	ROCK	175	10° 43' 54"	CONVEX DOWN	48	6.1	10	1
2257+40.00	ROCK	175	9° 38' 56"	CONVEX UP	48	7.2	10	4
2260+02.54	ROCK	175	11° 28' 1"	COMBINED	48	7.2	10	1
2270+90.00	ROCK	175	11° 30' 12"	CONVEX UP	48	8.6	10	5
2271+94.00	ROCK	125	22° 12' 21"	CONVEX DOWN	48	5.7	10	2
2273+45.00	ROCK	125	9° 7' 4"	CONVEX UP	48	3.9	10	4
2279+39.00	ROCK	125	15° 55' 58"	CONVEX DOWN	48	5.7	10	1
2280+10.00	ROCK	125	8° 51' 22"	CONVEX UP	48	4	10	4
2281+75.00	ROCK	125	12° 25' 4"	CONVEX UP	48	6.7	10	4
2282+37.00	ROCK	125	16° 38' 45"	CONVEX DOWN	48	5.3	10	1
2286+97.94	ROCK	100	78° 53' 51"	COMBINED	48	5.2	10	N.A.

* Concrete Block is required when restrained length 'W' is listed as N.A.

REACH 3 MITER BENDS

P.I. STATION	TYPE OF PLACEMENT	HEAD (ft)	ANGLE	DIRECTION	D (IN)	MIN. COVER (FT)	L1 (FT)	W (FT)
3312+80.64	ROCK	100	11° 19' 51"	COMBINED	48	9.2	10	2
3315+24.51	ROCK	100	10° 42' 48"	COMBINED	48	5.9	10	2
3359+87.48	ROCK	175	12° 22' 51"	COMBINED	48	4.1	10	2
3380+20.42	ROCK	200	11° 7' 20"	HORIZONTAL	48	7.8	10	2
3381+96.42	ROCK	200	22° 30' 0"	HORIZONTAL	48	8.7	10	3
3383+12.00	ROCK	200	22° 42' 3"	HORIZONTAL	48	9.7	10	3
3397+02.88	ROCK	225	21° 1' 56"	CONVEX UP	42	11.1	10	3
3412+40.00	ROCK	275	7° 45' 46"	CONVEX DOWN	42	8.6	10	7
3413+00.00	ROCK	275	8° 12' 28"	CONVEX UP	42	5.3	10	2
3416+50.00	ROCK	275	7° 8' 7"	CONVEX DOWN	42	8.6	10	6
3417+55.00	ROCK	300	5° 28' 8"	COMBINED	42	5.0	10	2
3427+70.15	NON ROCK	325	9° 50' 41"	COMBINED	42	8.7	15	23
3432+28.00	NON ROCK	325	33° 23' 4"	HORIZONTAL	42	7.9	10	8
3444+54.66	NON ROCK	325	10° 41' 57"	HORIZONTAL	42	7.1	10	3
3462+58.22	ROCK	350	11° 15' 0"	HORIZONTAL	42	5.5	10	3
3464+37.68	ROCK	350	11° 15' 0"	HORIZONTAL	42	6.2	10	3
3466+37.73	ROCK	350	11° 15' 0"	COMBINED	42	6.1	10	3
3468+17.19	ROCK	375	11° 15' 8"	HORIZONTAL	42	5.5	10	3
3475+91.86	NON ROCK	375	33° 45' 0"	HORIZONTAL	42	4.8	16	18
3491+13.37	NON ROCK	400	33° 45' 0"	HORIZONTAL	42	5.7	15	16
3501+89.41	NON ROCK	400	21° 1' 44"	CONVEX UP	42	6.0	10	10
3511+00.00	ROCK	425	12° 31' 55"	CONVEX DOWN	42	7.6	10	16
3512+50.00	ROCK	425	5° 5' 50"	COMBINED	42	4.5	10	2
3513+00.00	ROCK	425	17° 55' 52"	CONVEX UP	42	7.1	10	4
3513+85.00	ROCK	425	15° 24' 35"	CONVEX DOWN	42	8.5	10	18
3515+00.00	ROCK	425	9° 43' 39"	CONVEX UP	42	14.6	10	2
3517+30.00	NON ROCK	425	12° 17' 11"	HDD BEND	42	5.9	14	35
3536+13.00	NON ROCK	450	13° 12' 2"	HDD BEND	42	20.7	10	8
3537+70.72	ROCK	450	66° 32' 48"	COMBINED	42	15.2	10	14
3540+35.00	ROCK	425	12° 28' 58"	CONVEX UP	42	14.1	11	9
3541+10.00	ROCK	425	5° 51' 57"	COMBINED	42	14.0	11	2
3555+96.91	NON ROCK	425	29° 47' 39"	HORIZONTAL	42	15.3	11	10
3558+02.40	NON ROCK	425	45° 0' 0"	HORIZONTAL	42	16.3	14	14
3573+57.75	ROCK	375	27° 48' 9"	CONVEX UP	42	4.8	10	6
3575+95.00	ROCK	375	5° 11' 10"	CONVEX UP	42	3.6	10	9
3607+18.68	ROCK	325	40° 6' 7"	COMBINED	42	7.3	10	7
3691+18.77	ROCK	350	12° 9' 59"	HORIZONTAL	42	5.6	10	3
3707+56.91	ROCK	325	11° 33' 53"	HORIZONTAL	42	4.1	10	2
3733+44.14	ROCK	300	9° 32' 0"	COMBINED	42	7.4	10	2
3744+00.00	ROCK	300	10° 31' 50"	COMBINED	42	5.3	10	2

BUREAU OF RECLAMATION

ALWAYS THINK SAFETY

U.S. DEPARTMENT OF THE INTERIOR
BUREAU OF RECLAMATION
NAVAJO-GALLUP WATER SUPPLY PROJECT
NEW MEXICO

SAN JUAN LATERAL - BLOCK 2 - 3

LINE PIPE

REV	DATE	DESCRIPTION	BY
1	2026-05-18	Updated miter bends to match profiles for Reach 3.	Marner, Andrew (Andy) J P.E.

J. DEHAAN
DESIGNED
M. SUTER
DRAWN
D. L. GESUNDHEIT
CHECKED
Marner, Andrew (Andy) J P.E.
TECH. APPR.
Steen, Timothy M
APPROVED
PEER REVIEWER

DENVER, CO 2026-04-14

CONCRETE BLOCKED MITER BENDS

DATA TABLES

1695-D-60810

SHEET

Released

LAST SAVED DATE 2026-05-18
LAST SAVED BY AMARNER

CAD SYSTEM AutoCAD 2025 (LMS TECH)
CAD FILENAME 1695-D-60810-RD-1.DWG

Released

AUGER BORE REMOVED

LAST SAVED DATE
2026-05-18
LAST SAVED BY
AMARNER

CAD SYSTEM
AutoCAD Civil 3DS (LMS TECH)
CAD FILENAME
1695-D-62467-RD-1.DWG

BUREAU OF RECLAMATION

ALWAYS THINK SAFETY

U.S. DEPARTMENT OF THE INTERIOR
BUREAU OF RECLAMATION
NAVAJO-GALLUP WATER SUPPLY PROJECT
NEW MEXICO

SAN JUAN LATERAL - BLOCK 2 - 3

REACH 3 - LINE PIPE

REV NO		
1	2026-05-18	D Changed bored powerline crossing to open cut.
	Marner, Andrew (Andy) J P.E.	

J. DeHaan
DESIGNED
J. DeHaan
DRAWN
K. Pelzer
CHECKED
Marner, Andrew (Andy) J P.E.
TECH. APPR.
Steen, Timothy M
APPROVED
PEER REVIEWER

DENVER, CO 2026-04-13

AUGER BORE

POWERLINE CROSSING
STA. 3331+13

1695-D-62467
SHEET

Released

AUGER BORE REMOVED

LAST SAVED DATE
2026-05-18
LAST SAVED BY
AMARNER

CAD SYSTEM
AutoCAD Civil 3DS (LMS TECH)
CAD FILENAME
1695-D-62470-RD-4.DWG

BUREAU OF RECLAMATION

ALWAYS THINK SAFETY

U.S. DEPARTMENT OF THE INTERIOR
BUREAU OF RECLAMATION
NAVAJO-GALLUP WATER SUPPLY PROJECT
NEW MEXICO

SAN JUAN LATERAL - BLOCK 2 - 3

REACH 3 - LINE PIPE

REV NO		
1	2026-05-18	D Changed bored powerline crossing to open cut.
	Marner, Andrew (Andy) J P.E.	

J. DeHaan
DESIGNED
J. DeHaan
DRAWN
K. Pelzer
CHECKED
Marner, Andrew (Andy) J P.E.
TECH. APPR.
Steen, Timothy M
APPROVED
PEER REVIEWER

DENVER, CO 2026-04-13

AUGER BORE

POWERLINE CROSSING
STA. 3633+18

1695-D-62470
SHEET

Released

AUGER BORE REMOVED

LAST SAVED DATE
2026-05-18
LAST SAVED BY
AMARNER

CAD SYSTEM
AutoCAD 2025 (LMS TECH)
CAD FILENAME
1695-D-62471-RD-5.DWG

BUREAU OF RECLAMATION

ALWAYS THINK SAFETY

U.S. DEPARTMENT OF THE INTERIOR
BUREAU OF RECLAMATION
NAVAJO-GALLUP WATER SUPPLY PROJECT
NEW MEXICO

SAN JUAN LATERAL - BLOCK 2 - 3

REACH 3 - LINE PIPE

REV NO		
1	2026-05-18	D Changed bored powerline crossing to open cut.
	Marner, Andrew (Andy) J P.E.	

J. DeHaan
DESIGNED
J. DeHaan
DRAWN
K. Pelzer
CHECKED
Marner, Andrew (Andy) J P.E.
TECH. APPR.
Steen, Timothy M
APPROVED
PEER REVIEWER

DENVER, CO 2026-04-13

AUGER BORE

POWERLINE CROSSING
STA. 3707+02

1695-D-62471
SHEET