Statement of Work
Castle Creek Bridge Repairs

US DEPARTMENT OF AGRICULTURE (USDA)

STATEMENT OF WORK

CASTLE CREEK BRIDGE REPAIR

Statement of Work
Castle Creek Bridge Repairs

1.0 - Scope of Work

This contract is for urgently needed repairs to address scouring of the stream channel that is compromising the Castle Creek bridge's abutments and overall safety.

The scope of this project entails providing requested specification of rip rap class rock to stabilize the scour and fill in the scar. The contractor will be responsible for working in a stream and simultaneously under a bridge while complying with all requirements to do so. Excavation and stabilization of the embankment will take place and remaining structures of grouted rip rap will need to be preserved. The end result will be to reduce the scour and to protect the abutments from continued scour.

Original building plans for the bridge will be available to contractor.

This project requires the contractor to furnish all equipment, labor, materials, services, and permits necessary to perform the work as ordered by the Government, in full compliance with all applicable terms, specifications, drawings, and provisions.

1.1 – Project Location

Travel Directions:
FROM/STARTING: MOUNT SHASTA RANGER STATION ON 204 W ALMA ST, MT SHASTA, CA 96067
1. GET ON I-5 S FROM PINE ST AND W LAKE ST 3 MIN (0.8 MI), FOLLOW I-5 S TO CASTLE CREEK RD IN SHASTA COUNTY.
2. TAKE EXIT 724 FROM I-5 S 14 MIN (13.9 MI)
3. TURN RIGHT ONTO CASTLE CREEK RD 22 MIN (8.5 MI)
4. ARRIVED AT THE BRIDGE.
CASTLE CREEK RD CASTELLA, CA 96017

LATITUDE: 41°10'1.48"N
LONGITUDE: 122°25'55.83"W

1.2 – Government Furnished Property

Existing undamaged materials salvaged from demolition activities.

1.3 – Protection of Existing Improvements

The Contractor shall protect existing pavement, buildings, landscaping, and other existing improvements. The Contractor shall handle repairing any damage to existing facilities and improvements.

1.4 – Disposal

Cleanup and remove debris around immediate and surrounding building or work areas and removal from Gov't property to a permitted disposal facility.

1.5 – Time of Completion

Contract time is 30 days from the issuance of the "Notice to Proceed". It is expected that construction occur early summer 2026.

1.6 – Restrictions on Work

- Work hours are limited to non-holiday weekdays, Monday – Friday, 0700 – 1800. Work site much be clear by noon the Friday before the Monday holiday.
- In accordance with the fire plan.
- When the Contracting Officer (or designated representative) determines that adverse weather has made access too dangerous or that continued vehicular travel would cause unacceptable road damage.
- For sites requiring archaeology monitoring, contractor must notify COR at least 24 hours prior to any ground disturbing activities and no ground disturbing activities may occur without a Forest Service archaeologist on site.
- When the Contracting Officer or designated representative determines that work must stop due to the presence of archaeological artifacts.
- Contractor is responsible for the security of their tools and equipment at all times.
- Contractor is responsible for removal and disposal all excavated dirt and shall not leave excavated dirt scattered over the site, unless approved by the COR.
- All trash and loose materials shall be secured by the contractor daily.
- The Contractor is responsible for installing sediment control devices, such as straw wattles, to prevent sediment runoff to nearby areas. Excavation work shall not commence until sediment control devices have been installed and approved by the COR.
- The Contractor shall not use Government trash facilities without the COR'S approval.
- All construction debris remains the property of the Contractor and shall be properly disposed of off National Forest Land.
- The contractor will be able to utilize the Forest Service Roads; however, the Contractor will be responsible for any damage to the roads due to construction activities. The contractor shall be responsible for obtaining permission to use all other roads and staging areas.

1.7 – Camping and Housing

Housing is not provided by the Government. Camping is not permitted in US Forest Service campgrounds. Contractor [ ] will [X] will not be permitted to camp elsewhere on US Forest Service land. Camping on Forest Service land is not a right; permission may be revoked for failure to comply with the terms of the permit.

1.8 – Required Submittals

Required submittals for this project shall include, but are not limited to, the following:
- Traffic Control Plan
- Hazardous Spill Plan
- Quality Control Plan
- Safety Plan

- Material Source Documentation

1.9 – Additional Information

The Contractor shall possess and maintain all professional licenses required to perform the work specified under this construction contract. Pursuant to FAR 52.236-7, Permits and Responsibilities (July 2025), the Contractor is solely responsible for obtaining and maintaining all permits and licenses necessary to ensure full compliance and proper performance throughout the contract period.

The contractor is responsible for restrooms, water, and electricity. Permits, if required, on public roads are the contractor's responsibility.

Working Ev days, certain fire risk activities such as welding as defined in Fire Plan, require approval in advance from the district.

All equipment shall arrive on site washed and free of visible soil, debris, and organic matter. All equipment will be inspected and approved by the C.O. prior to unloading on the forest.

Travel

All contractor travel-related expenses—including transportation, lodging, meals, and any other associated costs—are considered incidental and must be fully covered within Mobilization. The Forest Service will not reimburse the contractor for travel, per diem, accommodations, or any other personnel-related expenses.

Contractor's Key Personnel

The contractor shall designate a qualified on-site representative who will be present during all project activities and authorized to act on behalf of the contractor. Only contractor personnel directly engaged in performing or supporting the work under this contract are permitted on the project site; no unauthorized individuals or
non-project staff may enter or remain on the premises.

Statement of Work
Castle Creek Bridge Repairs

Base Work

151 - Mobilization

Includes mobilization and demobilization to and from the project locations. This item also includes fire protection, equipment special requirements, cleaning, permits, and other incidentals or items outlined in FP-24 or in FSSS.

201 - Clearing and Grubbing

This work consists of clearing and grubbing within the clearing limits designated in the plans or COR. This work is to aid in allowing better access to the downstream area of the bridge to begin repairs. Scattering the vegetation material in disturb area for erosion and sediment control measures is permitted. Contractor will provide a plan to CO and COR for affected areas before work begins. See FP-24 for more information and details.

207 - Earthwork and Geosynthetics

This work consists of providing and installing geotextile in separation, stabilization, filter, and reinforcement applications, geogrid in stabilization and reinforcement applications, and geomembranes in moisture barrier applications. Work will be on and on a stream course which will require alterative oils in machines and other precautions. See Section 714, part C for non-woven details.

***208* - Structure Excavation and Backfill for Selected Major Structures**

This work consists of excavating material for the construction of selected structures. This work also includes preserving channels, shoring and bracing, constructing cofferdams, sealing foundations, dewatering, preparing foundations, backfilling, and removal of safety features and cofferdams. Contractor will provide a plan before work begins on the structure for how they will address the scour and or remove grouted rip rap. Further details are available in FP-24.

251- Rip Rap Class 9 and 7

This work consists of providing and placing rip rap. Dress the slope to produce a smooth surface. Place Geotextile according to Section 207, as required in the is contract. See Table 705-1 for classification and gradation requirements. This contract requires class 9 and 7 to be used to lock together and provide scour protection. It is the contractor's responsibility to ensure that all requirements for rip rap specifications are met. Tickets will be given to CO or COR. Careful placement of the rip rap under the bridge is the responsibility of contractor and any damage will be at the expense of contractor to repair.

Section 705

Table 705-1
Gradation Requirements for Riprap(1)

Class	Percent of Rock Equal or Smaller by Count, DX	Range of Intermediate Dimensions, inches(2)	Range of Rock Mass, pounds(3)
1	100	9 to 15	59 to 270
	85	7 to 11	28 to 110
	50	5 to 8	10 to 42
	15	3 to 6	2 to 18
2	100	15 to 21	270 to 750
	85	11 to 15	110 to 270
	50	8 to 11	42 to 110
	15	6 to 8	10 to 42
3	100	21 to 27	750 to 1600
	85	15 to 19	270 to 560
	50	11 to 14	110 to 220
	15	8 to 10	42 to 81
4	100	27 to 33	1600 to 2900
	85	19 to 23	560 to 990
	50	14 to 17	220 to 400
	15	9 to 12	59 to 140
5	100	33 to 39	2900 to 4850
	85	23 to 28	990 to 1800
	50	17 to 20	400 to 650
	15	11 to 15	110 to 270
6	100	39 to 45	4850 to 7400
	85	28 to 32	1800 to 2650
	50	20 to 23	650 to 990
	15	13 to 17	180 to 400
7	100	45 to 54	7400 to 12,800
	85	32 to 38	2650 to 4450
	50	23 to 28	990 to 1800
	15	15 to 20	270 to 650
8	100	54 to 66	12,800 to 23,400
	85	38 to 47	4450 to 8450
	50	28 to 35	1800 to 3500
	15	19 to 25	560 to 250
9	100	66 to 78	23,400 to 38,600
	85	47 to 55	8450 to 13,500
	50	35 to 41	3500 to 5600
	15	22 to 30	870 to 2200
10	100	78 to 90	38,600 to 59,300
	85	55 to 64	13,500 to 21,300
	50	41 to 48	5600 to 9000
	15	26 to 36	1450 to 3800

(1) Gradation includes spalls and rock fragments to provide a stable, dense mass.
(2) The intermediate dimension is the longest straight-line distance across the rock that is perpendicular to the rock's longest axis on the rock face with the largest projection plane.
(3) Rock mass is based on a specific gravity of 2.65 and 85 percent of the cubic volume as calculated using the intermediate dimension.

799

208 - Structure Excavation and Backfill for Selected Major Structures

This work consists of providing, installing, maintaining, relocating, and removing temporary traffic control devices and services as ordered for the control and protection of public traffic through the project. Advance warning arrow board, barricade, and warning light types are designated in the MUTCD. Route is a high use and will require proper notification methods. If contractor needs the road closed proper notification will be required and know before work begins. A plan will be required before work begins to be submitted to CO and COR.

Note: Items described here are to give the contractor the ability to address the needed repairs to save the structure from further scour and or total failure. The final outcome will have a neat, clean appearance and be done professionally. Erosion and sediment control measures are in place and functioning. Vegetation in work area removed. No damage to forest service resources or assets.

STATE	FOREST	PROJECT NO.	PROJECT NAME	SHEET	TOTAL SHEETS
CA	SHASTA–TRINITY				

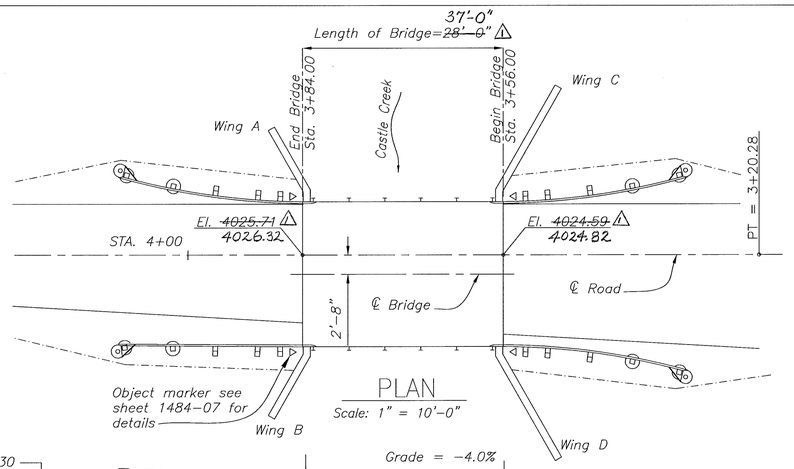

PLAN

Scale: 1" = 10'-0"

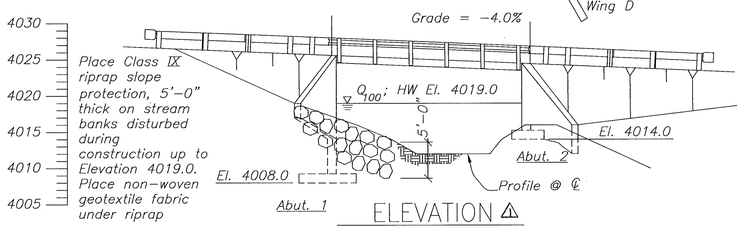

ELEVATION ⚠

Scale: 1" = 10'-0"

ESTIMATED BRIDGE QUANTITIES

ITEM NO	DESCRIPTION	QUANTITY	METHOD OF PAYMENT
*202(01)	Removal of Structures and Obstructions	Lump Sum	L.S.Q.
206(01)	Excavation for Bridge Structures	119 C.Y.	A.Q.
552(01)	Structural Concrete, Class A	60 C.Y.	D.Q.
553(02)	Prestressed Concrete Structures	Lump Sum	L.S.Q.
**554(01)	Reinforcing Steel	8540 Lb	D.Q.
556(02)	Steel Bridge Railing	50 LF	A.Q.
556(06)	Bridge Approach Railing	100 LF	A.Q.
601A(01)	Mobilization	Lump Sum	L.S.Q.
605(26)	Geocomposite Drain Assembly	13 S.Y.	D.Q.
623(05)	Object Markers	4 Ea.	A.Q.

* Pay Item 202(01) consists of removing the existing culvert and disposing it off of Forest Service Land; and removing the existing concrete abutment from the bedrock surface and placing the broken up sections at the site as directed by the engineer.

** Payment for elastomeric bearing pads shall be included in Item 554(01).

HYDROLOGY AND HYDRAULICS ⚠

Drainage area = 4.9 sq.mi.
Precipitation, P=70 in. per year
Mannings coefficient n=0.073
Steam slope = 9.0%
Q_{10} = 830 cfs; V= 12.3 fps; El. 4016.0
Q_{100} = 2,300 cfs; V= 16.0 fps; El. 4019.0

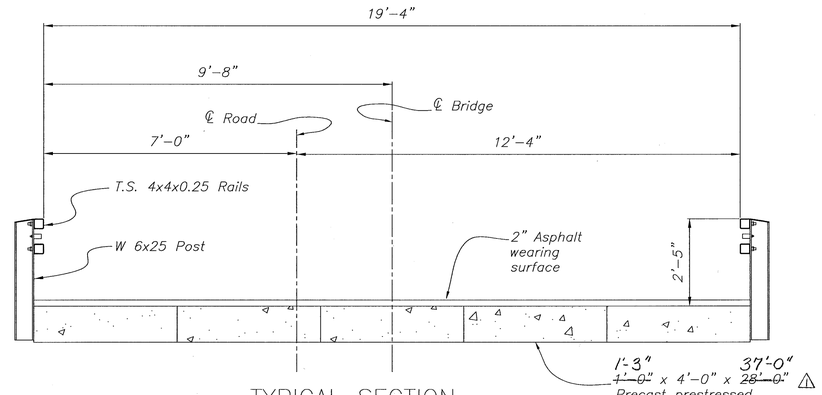

TYPICAL SECTION

Scale: 1/2" = 1'-0"

GENERAL NOTES

SPECIFICATIONS: Design: AASHTO Standard Specifications for Highway Bridges, 1996. CONSTRUCTION: Forest Service Specifications for Construction of Roads and Bridges 1985, and Special Project Specifications.

DESIGN LOADS: Dead Loads: Concrete = 150 PCF, Future wearing surface = 25 PSF. Earth pressure pressure equivalent to a fluid weighing 36 PCF. Live Load: HS20–44.

SEISMIC CRITERIA: Acceleration coefficient = .01g, Importance classification = II, Seismic Performance Category = B, Soil Profile type = I.

CONCRETE: Cast in place concrete shall be class A and vibrated, with a 28 day compressive strength of 3,300 psi. Allowable stress in concrete: fc = 1320 psi, Modular ratio: n=9. Unless otherwise noted, chamfer all exposed edges 3/4". Exposed surfaces shall have a rubbed finish. Additives containing calcium chloride shall not be used.

PRESTRESSED CONCRETE: Prestressed concrete shall be class P, with a minimum compressive strength of 5,000 psi at 28 days. Minimum compressive strength at the time of transfer of pressure force shall be 4,000 psi.

REINFORCING STEEL: Bars shall conform to the requirements of AASHTO M31 (ASTM A615), Grade 60. Allowable stress in reinforcing steel: fs = 24 KSI. Unless otherwise shown, minimum covering to face of steel shall be 2". Substructure reinforcing steel shall not be fabricated until actual footing elevations have been established in the field.

PRESTRESS STEEL: Prestressing steel shall be Grade 270 and consist of a 7 wire low relaxation strand of 1/2" diameter, produced and tested in accordance with AASHTO M203 (ASTM A416). The initial tensile force applied to each strand shall be 31,000 lbs. The final effective prestress force remaining in the strand after all the losses is estimated to be 24,100 lbs.

MISCELLANEOUS STEEL: All plates, shapes, anchor bolts, and rods shall conform to AASHTO M270 Grade 36 (ASTM A36). Bolts shall conform to AASHTO M164 (ASTM A325). All steel shall be hot dipped galvanized per AASHTO M111 (ASTM A123) or AASHTO 232 (ASTM A153) after fabrication.

PRESTRESS MEMBERS: Prestressed units shall be manufactured as detailed on the plans. Units shall be kept upright at all times and shall be supported at ends during transportation and storage. Lifting devices shall be located at the ends of the units and are the responsibility of the contractor. Deck surface shall be given a bridge deck float finish.

ELASTOMERIC BEARINGS: Bearing pads shall conform to the Special Project Specifications and have a Durometer hardness of 60. Design Method A, Grade 3.

RAILING: See Drawing R–1484–05 for Railing Notes.

BEARING STRESSES: Allowable foundation bearing pressure = 6 tons per square foot at Abut. 1 (below El. 4011.0) and 25 tons per square foot at Abut. 2 (bedrock). Maximum calculated bearing pressure = 2.4 Tons / sq. ft.

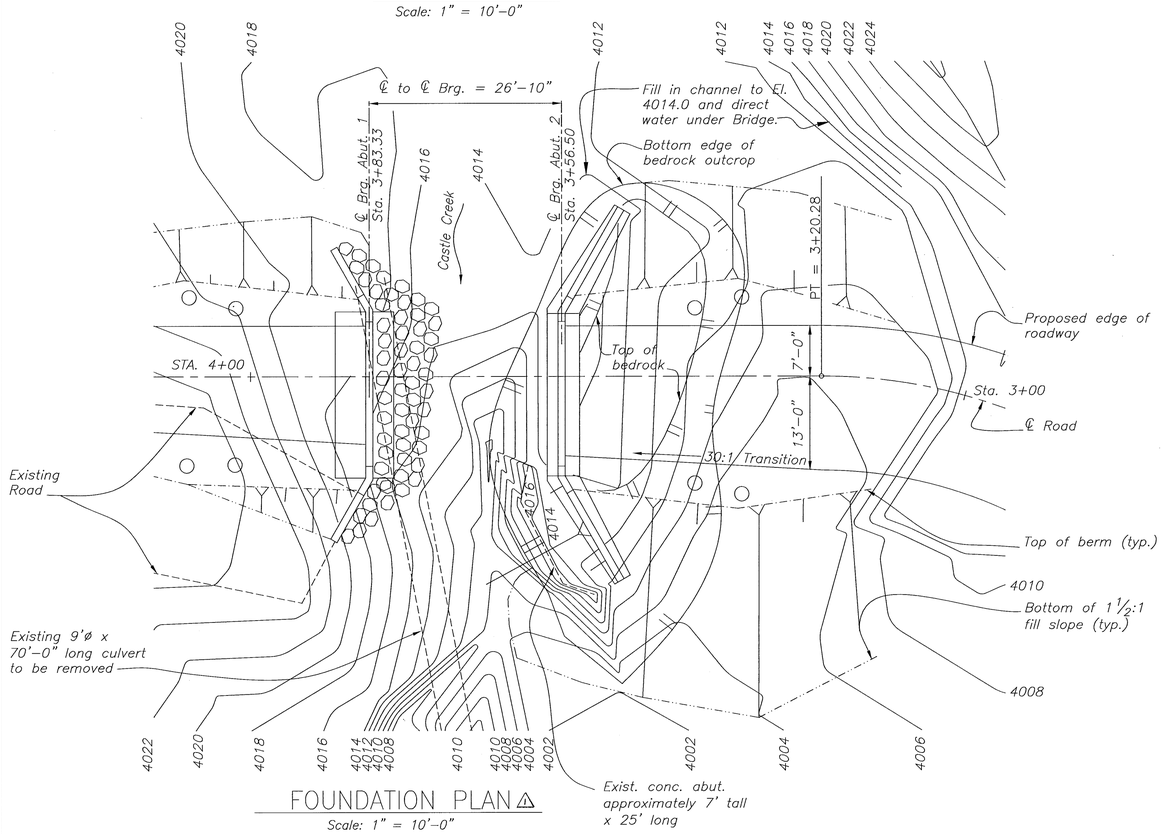

FOUNDATION PLAN ⚠

Scale: 1" = 10'-0"

Section 10, Township 38N, Range 5W

⚠ Set abutment 1 back 9 feet from stream. Increased bridge length to 37'-0". See sheet R-1484-01a for new grading plan, bridge elevation, and hydrology and hydraulics.

DESIGNED C. J. Grimaldi DATE 6/98	U. S. DEPARTMENT OF AGRICULTURE FOREST SERVICE REGION FIVE	
DRAWN Zachary Hilliard 3/25/98		
CHECKED Nancy Taylor 6/22/98	CASTLE CREEK BRIDGE	
RECOMMENDED: Nancy Taylor DATE 6/22/98 FOR: STAFF ENGINEER TRANSPORTATION STRUCTURES	ROAD NO. 39N25	
APPROVED: DATE 6/22/98 REGIONAL ENGINEER	SCALE: As Noted	BRIDGE SHEET 1 OF 7
DISREGARD PRINTS BEARING EARLIER DATES		DRAWING NUMBER R–1484–01
REVISION MARK AND DATE ⚠ 9/98 cg		

STATE	FOREST	PROJECT NO.	PROJECT NAME	SHEET	TOTAL SHEETS
CA	SHASTA–TRINITY				

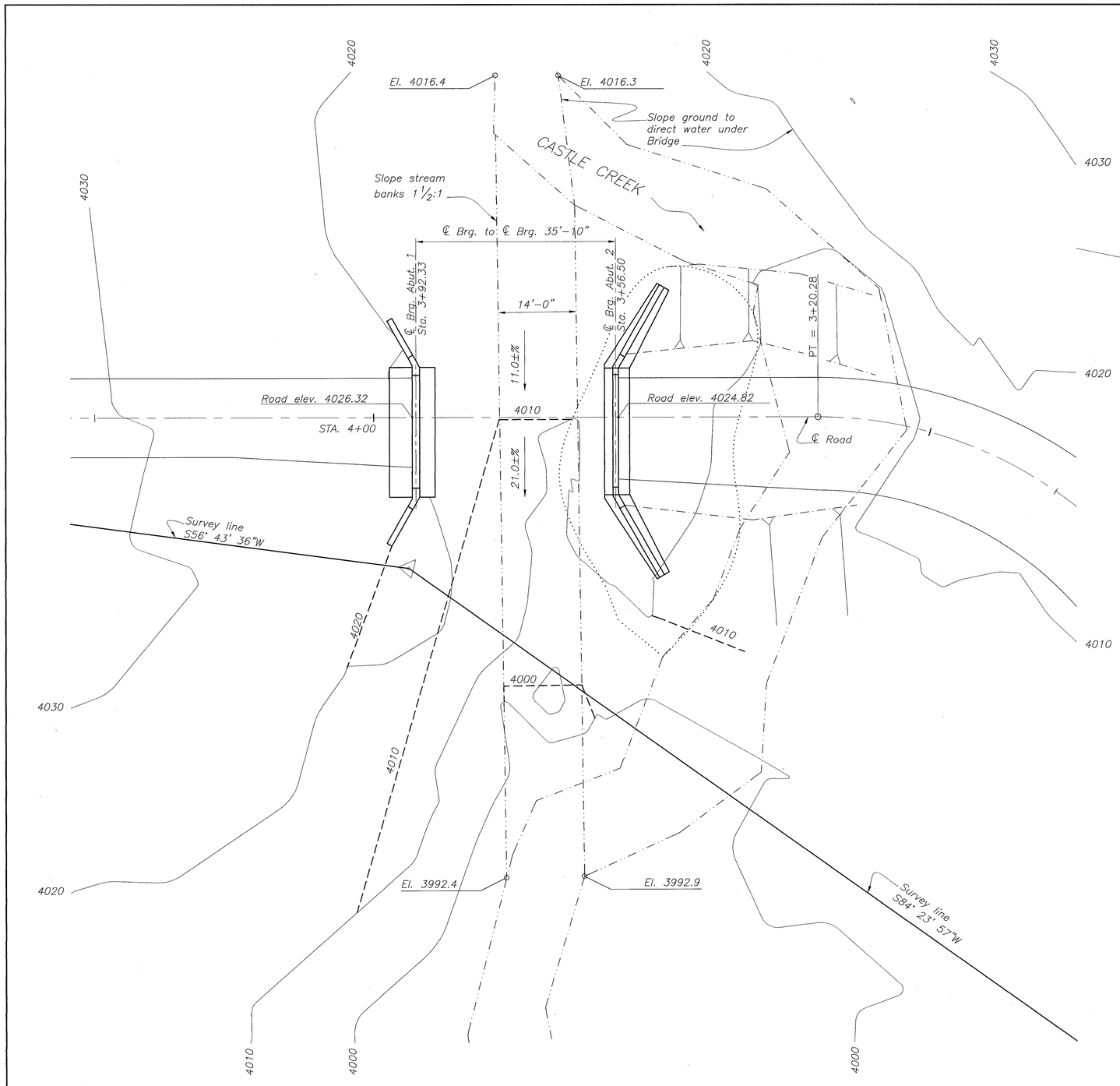

GRADING PLAN

Scale: 1" = 10'–0"

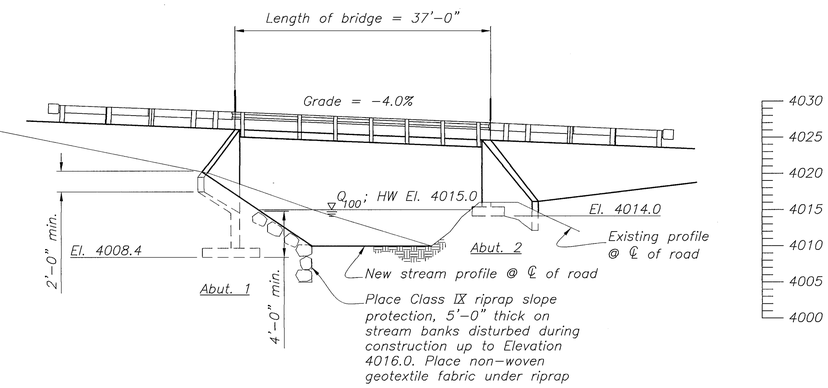

HYDROLOGY AND HYDRAULICS

Drainage area = 4.9 sq.mi.
Precipitation, P=70 in. per year
Mannings coefficient n=0.073
Stream slope = 17.0%
Q_{10} = 830 cfs; V= 15.4 fps; El. 4012.75
Q_{100} = 2,300 cfs; V= 20.0 fps; El. 4015.0

LEGEND

- Bedrock outcrop
- New contours
- Existing contours
- Creek edge

Section 10, Township 38N, Range 5W

DESIGNED C.J. Grimaldi DATE 9/98
DRAWN Zachary Hilliard 9/25/98
CHECKED Nancy Eaton 9/28/98
RECOMMENDED Nancy Eaton DATE 9/28/98
STAFF ENGINEER TRANSPORTATION STRUCTURES
APPROVED: DATE
REGIONAL ENGINEER

DISREGARD PRINTS BEARING EARLIER DATES

REVISION MARK AND DATE

U. S. DEPARTMENT OF AGRICULTURE
FOREST SERVICE
REGION FIVE

CASTLE CREEK BRIDGE
ROAD NO. 39N25
SITE PLAN

SCALE:
BRIDGE SHEET 1a OF 7
DRAWING NUMBER R–1484–01a

STATE	FOREST	PROJECT NO.	PROJECT NAME	SHEET	TOTAL SHEETS
CA	SHASTA–TRINITY				

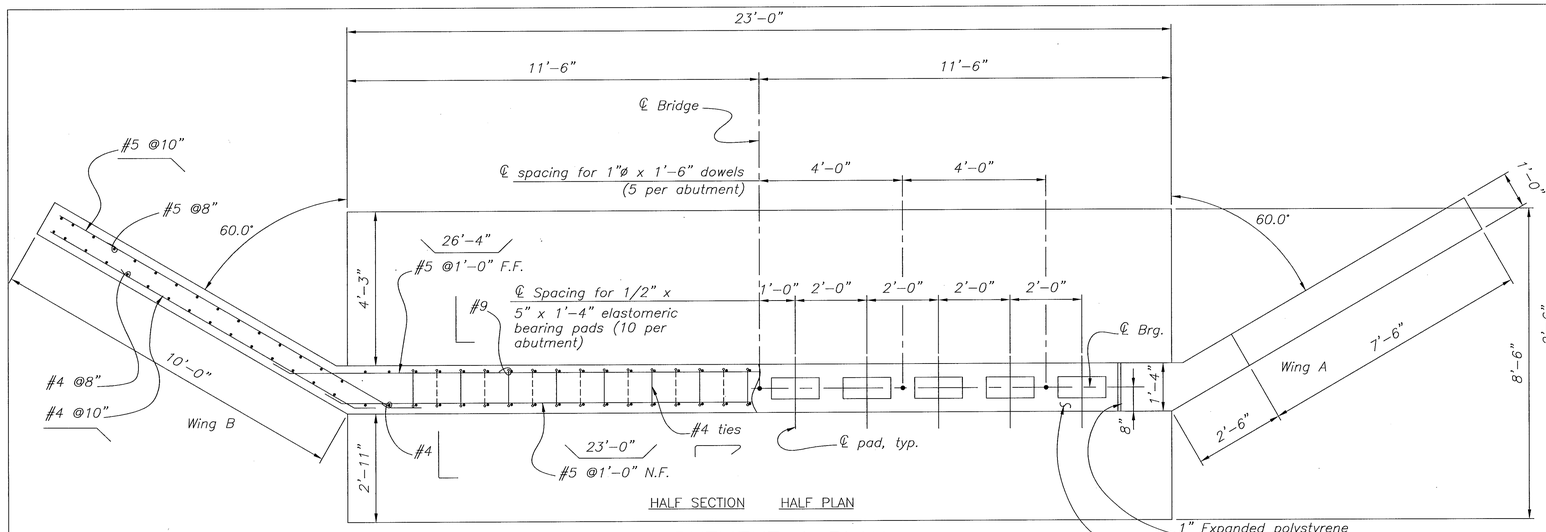

ABUTMENT 1 PLAN

Scale: 1/2" = 1'–0"

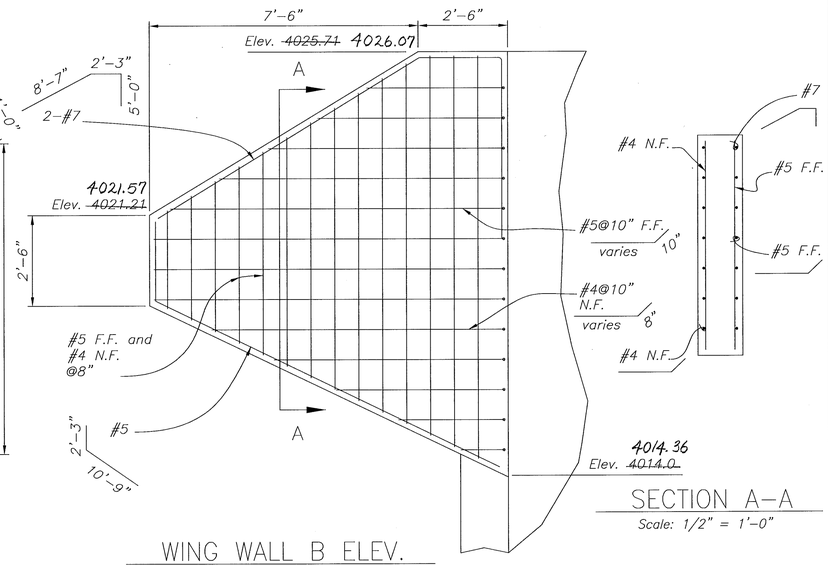

WING WALL B ELEV.

Scale: 1/2" = 1'–0"

SECTION A–A

Scale: 1/2" = 1'–0"

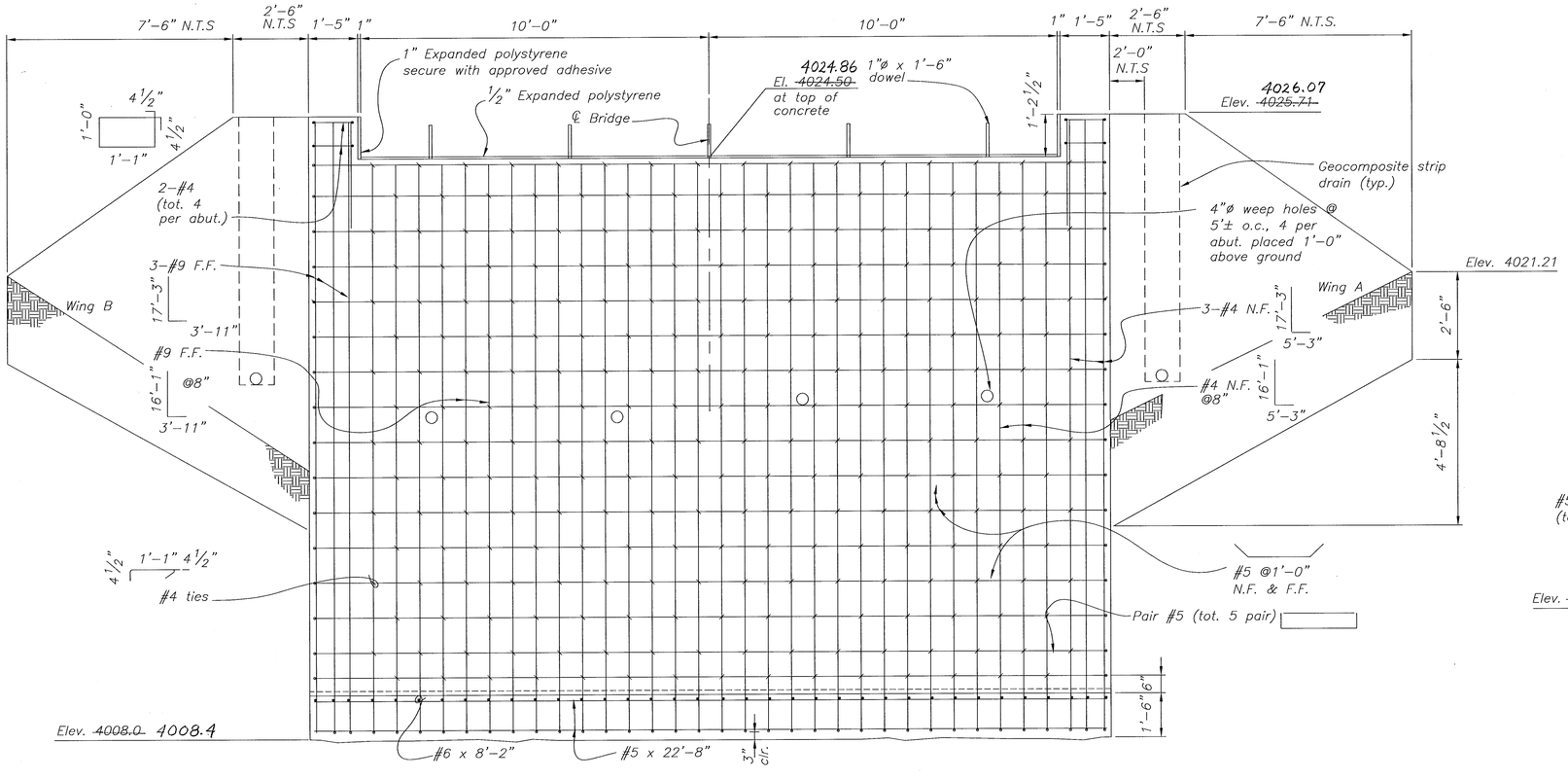

ABUTMENT 1 ELEVATION

Scale: 1/2" = 1'–0"

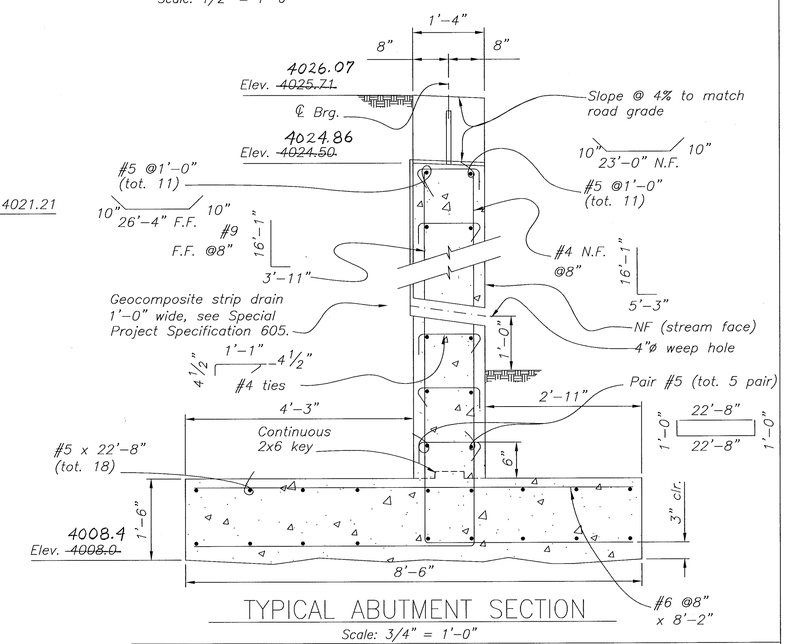

TYPICAL ABUTMENT SECTION

Scale: 3/4" = 1'–0"

N.F. = Near Face
F.F. = Fill Face

N.T.S. = Not to Scale

⚠ Elevations are raised by 0.36 feet.

DESIGNED C.J. Grumaldi DATE 6/98
DRAWN Andrew Johnson 6/22/98
CHECKED Nancy Eipton 6/22/98
RECOMMENDED: Nancy Eipton DATE 6/22/98
STAFF ENGINEER, TRANSPORTATION STRUCTURES
APPROVED: DATE 6/22/98
REGIONAL ENGINEER
DISREGARD PRINTS BEARING EARLIER DATES
REVISION MARK AND DATE ⚠ 9/98 cg

U. S. DEPARTMENT OF AGRICULTURE
FOREST SERVICE
REGION FIVE

CASTLE CREEK BRIDGE

ROAD NO. 39N25

ABUTMENT 1 DETAILS

SCALE: As Noted

BRIDGE SHEET 2 OF 7

DRAWING NUMBER R-1484-02

STATE	FOREST	PROJECT NO.	PROJECT NAME	SHEET	TOTAL SHEETS
CA	SHASTA–TRINITY				

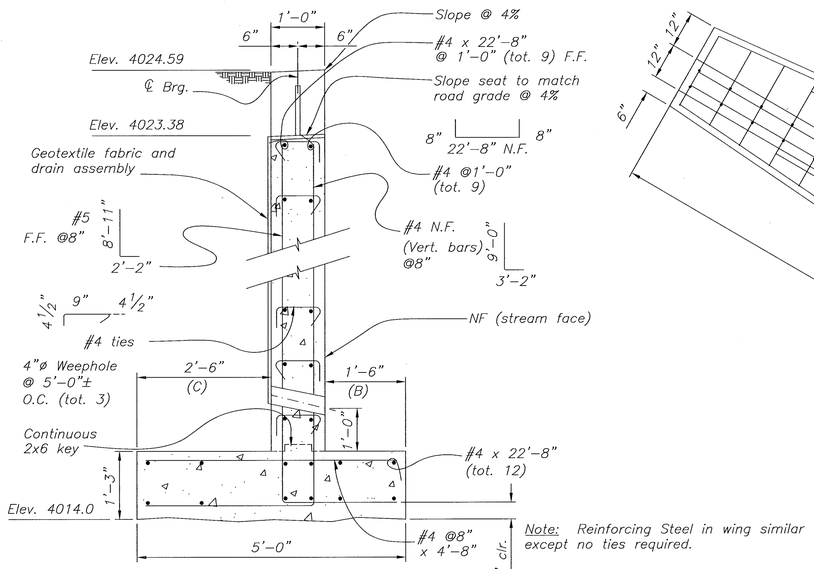

Note: Reinforcing Steel in wing similar except no ties required.

ABUTMENT 2 SECTION

Scale: 3/4" = 1'–0"

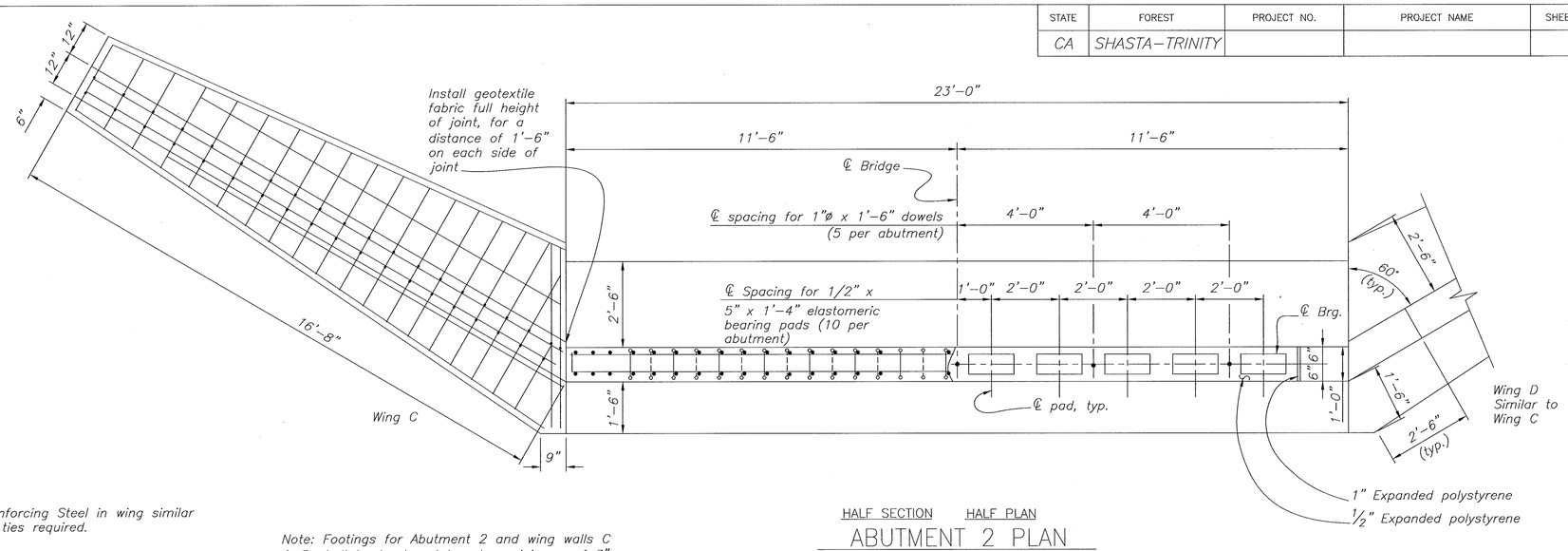

HALF SECTION HALF PLAN

ABUTMENT 2 PLAN

Scale: 1/2" = 1'–0"

Note: Footings for Abutment 2 and wing walls C & D shall be level and keyed a minimum of 3" into the bedrock. ~~Controlled blasting shall be used to level the bedrock. Bedrock fractures shall be grouted after blasting.~~

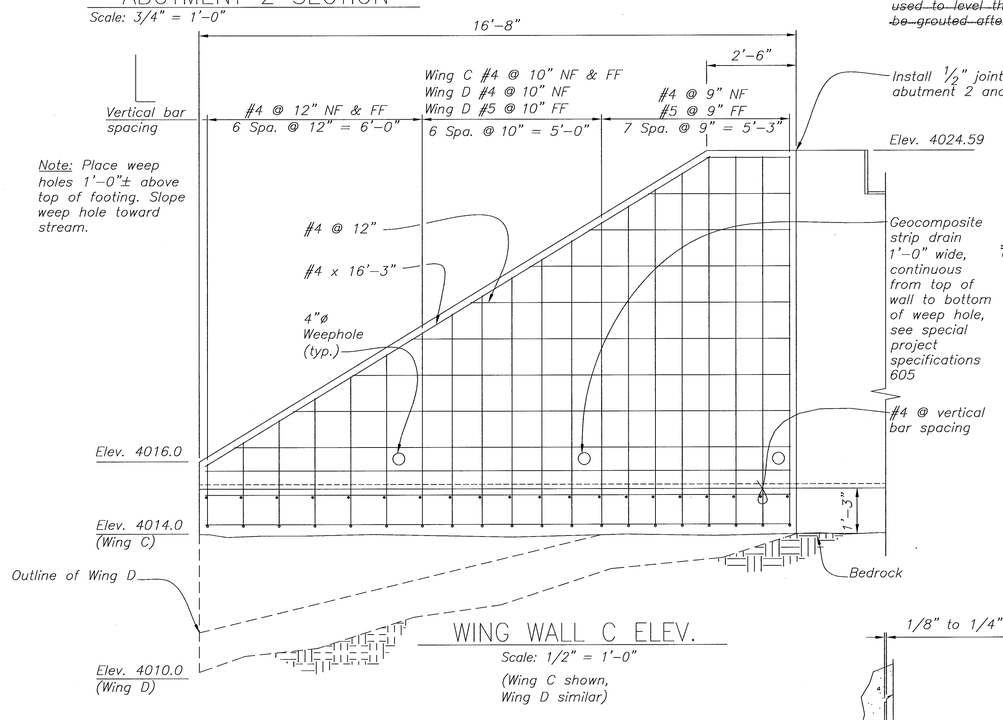

WING WALL C ELEV.

Scale: 1/2" = 1'–0"

(Wing C shown, Wing D similar)

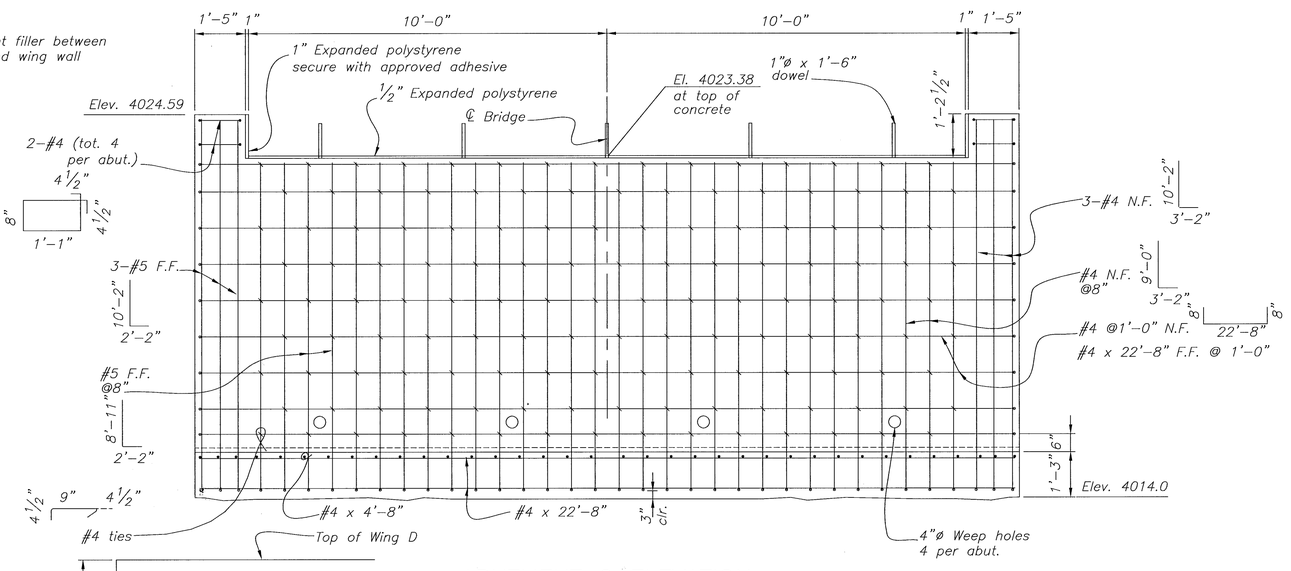

ABUTMENT 2 ELEVATION

Scale: 1/2" = 1'–0"

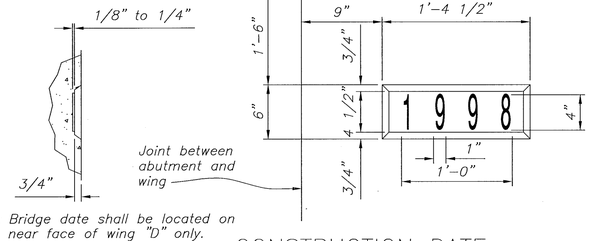

Note: Bridge date shall be located on near face of wing "D" only.

CONSTRUCTION DATE

N.T.S.

DESIGNED C.J. Drumaldi DATE 6/98	U. S. DEPARTMENT OF AGRICULTURE FOREST SERVICE REGION FIVE	
DRAWN Zachary Hilliard 5/22/98		
CHECKED Nancy Eupton 6/22/98	CASTLE CREEK BRRIDGE	
RECOMMENDED: Nancy Eupton DATE 6/22/98 — STAFF ENGINEER TRANSPORTATION STRUCTURES	ROAD NO. 39N25	
APPROVED: DATE 6/22/98 — REGIONAL ENGINEER	ABUTMENT 2 DETAILS	
DISREGARD PRINTS BEARING EARLIER DATES	SCALE:	BRIDGE SHEET 3 OF 7
REVISION MARK AND DATE		DRAWING NUMBER R–1484–03

STATE	FOREST	PROJECT NO.	PROJECT NAME	SHEET	TOTAL SHEETS
CA	SHASTA–TRINITY				

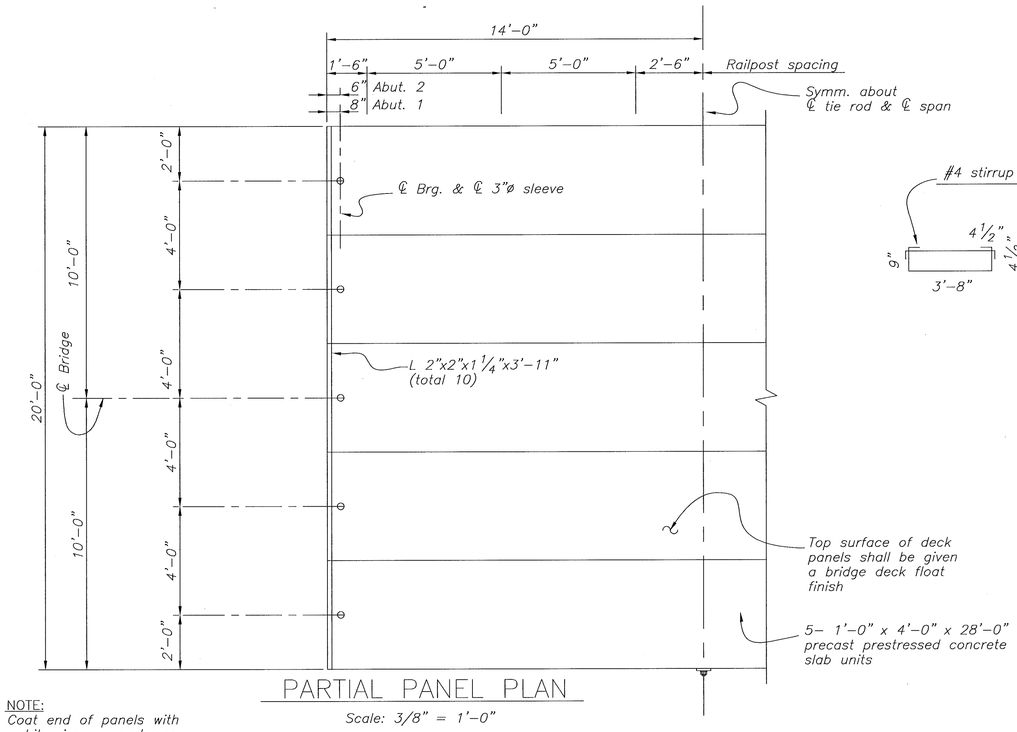

PARTIAL PANEL PLAN

Scale: 3/8" = 1'–0"

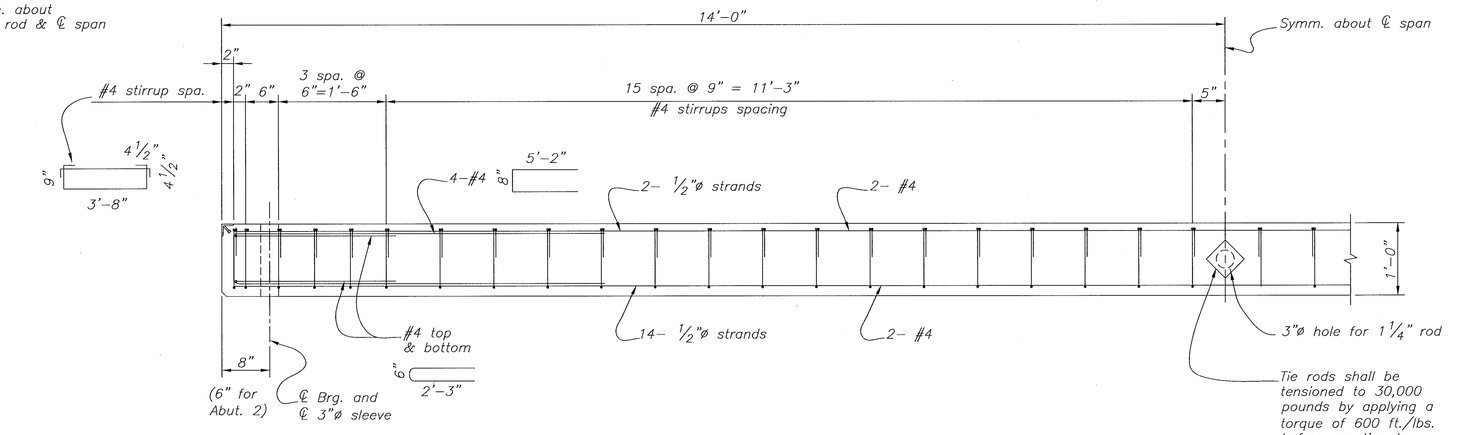

PARTIAL PANEL ELEVATION

Scale: 1" = 1'–0"

NOTE:
Coat end of panels with a bituminous membrane at abutment

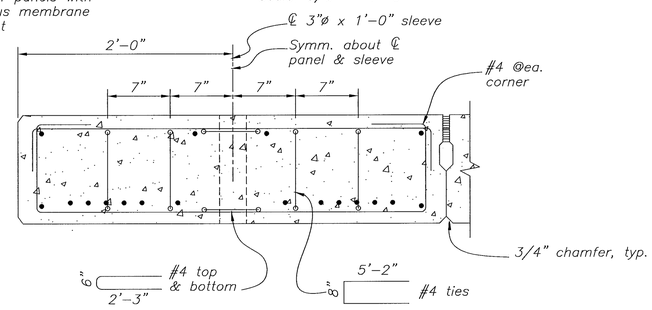

PANEL SECTION NEAR ABUTMENT

Scale: 1 1/2" = 1'–0"

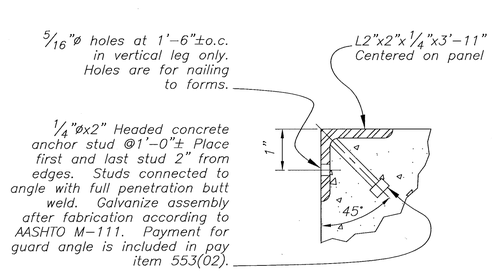

GUARD ANGLE

Scale: 6" = 1'–0"

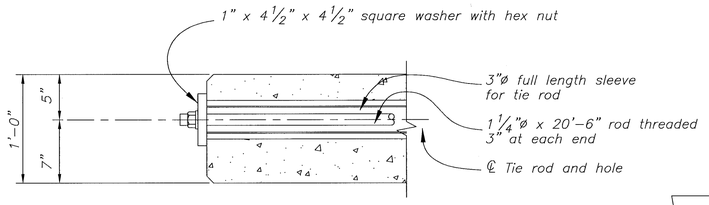

NOTE: Payment for tie rods is included in pay item 553(02).

TIE ROD SECTION

Scale: 1 1/2" = 1'–0"

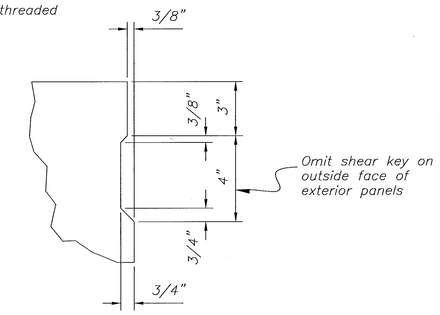

SHEAR KEY DETAIL

Scale: 3" = 1'–0"

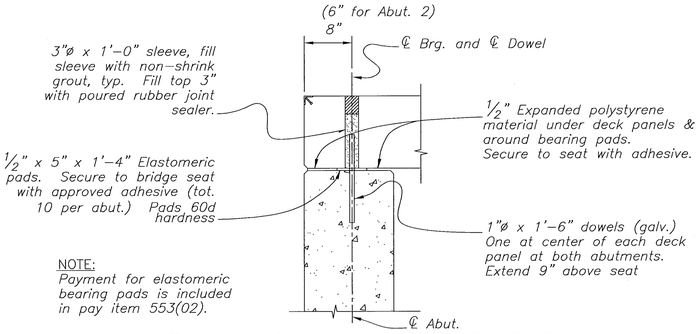

NOTE:
Payment for elastomeric bearing pads is included in pay item 553(02).

PANEL DETAIL AT ABUTMENT

Scale: 1" = 1'–0"

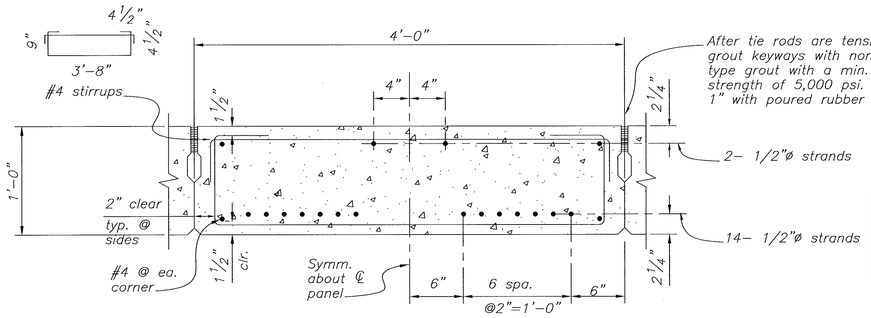

(Total 16– 1/2"ø strands)

PANEL SECTION NEAR MIDSPAN

Scale: 1 1/2" = 1'–0"

⚠ Beam length increased to 37'-0". See shop drawings for details.

DESIGNED C. J. Ghimaldi	DATE 6/98	U. S. DEPARTMENT OF AGRICULTURE FOREST SERVICE REGION FIVE
DRAWN Andrew Johnson	5/21/98	
CHECKED N. Tipton / Nancy Tipton	~~6/17/98~~ 6/22/98	CASTLE CREEK BRIDGE
RECOMMENDED: Nancy Tipton (STAFF ENGINEER/TRANSPORTATION STRUCTURES)	DATE 6/22/98	ROAD NO. 39N25
APPROVED: (REGIONAL ENGINEER)	DATE 6/22/98	SUPERSTRUCTURE DETAILS
DISREGARD PRINTS BEARING EARLIER DATES		SCALE: As Noted
REVISION MARK AND DATE: 1 9/98 cg		BRIDGE SHEET 4 OF 7
		DRAWING NUMBER R–1484–04

STATE	FOREST	PROJECT NO.	PROJECT NAME	SHEET	TOTAL SHEETS
CA	SHASTA–TRINITY				

RAILING NOTES:
1. Posts shall be vertical.
2. Rails shall be parallel to vertical grade.
3. Contractor shall provide shims to align posts.
4. Tubing shall be continuous over not less than 3 intermediate posts except as approved by the Engineer.
5. Galvanize all items in rail assembly after fabrication. All exposed edges of tube rails and posts shall be ground smooth before galvanizing.
6. Stud bolt nuts shall be torqued to 175ft.–lbs.
7. Anchor bolt nuts shall be wrench tight.
8. Bolts shall comply with AASHTO M164 (ASTM A–325)
9. Rods and bolts shall have heavy hex nuts.
10. 1/4" Diameter drain holes shall be provided in bottom face of closed end of each tube.
11. Plates and posts shall be AASHTO M183 (ASTM A36). Tube shall be ASTM A500 or A501.
12. Applicable rail construction specification is Item 556.
13. Rails shall be shop bent.
14. Ends of tube rail shall have rail cap.

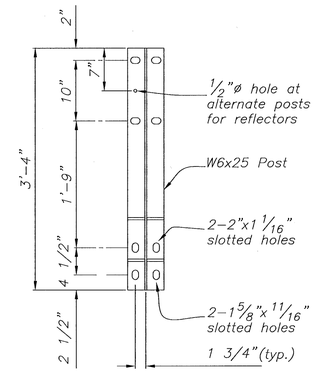

POST SECTION B–B

Scale: 1"=1'–0"

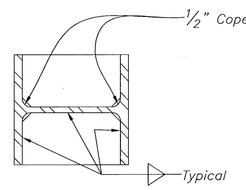

SECTION A–A

Scale: 3"=1'–0"

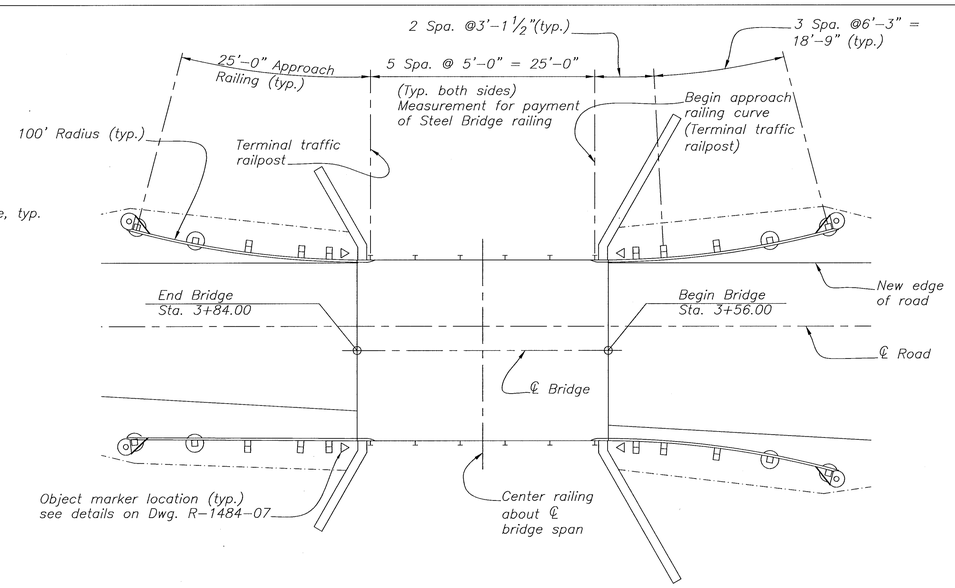

RAILING PLAN

Scale: 1"=10'–0"

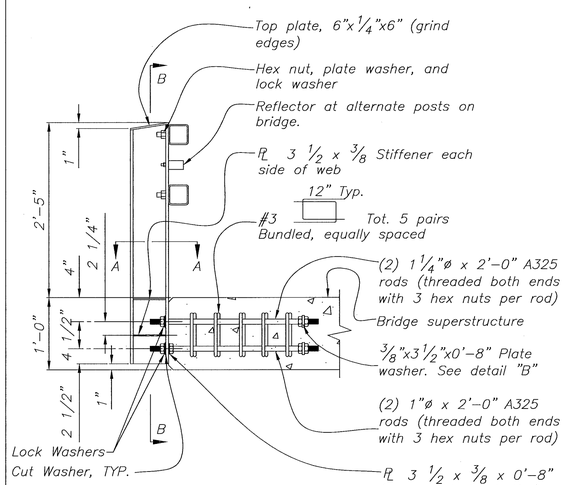

RAILING SECTION

Scale: 1"=1'–0"

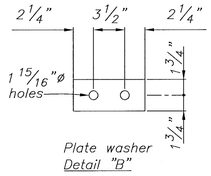

Plate washer Detail "B"

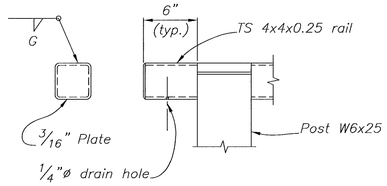

ELEVATION

RAIL CAP DETAILS

No Scale

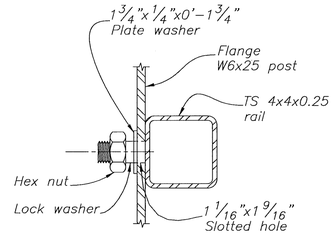

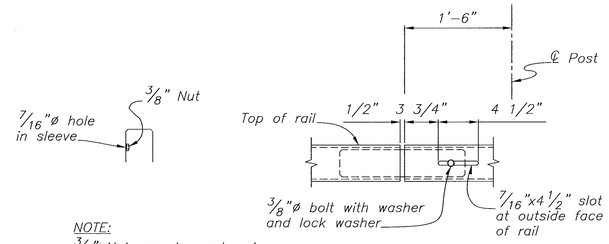

NOTE:
3/8" Nut may be replaced with drilled and tapped hole in sleeve

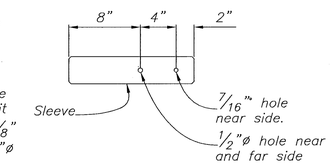

Sleeve formed of 3/16" plate bent as shown for sliding fit inside of tube. Tack weld 3/8" nut inside of sleeve for 3/8"ø hex head bolt with washer and lock washer.

RAILING SPLICE DETAILS

Scale: 1 1/2"=1'–0"

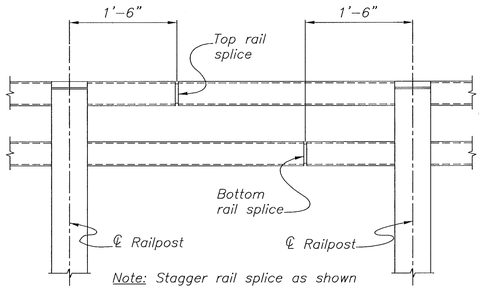

Note: Stagger rail splice as shown

RAIL SPLICE LOCATION

Scale: 1"=1'–0"

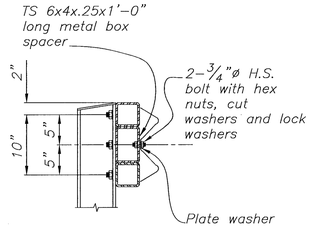

ASSEMBLY

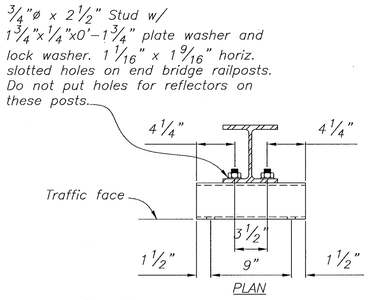

PLAN

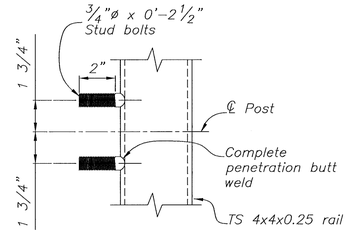

STUD BOLT DETAILS

Scale: 3" = 1'–0"

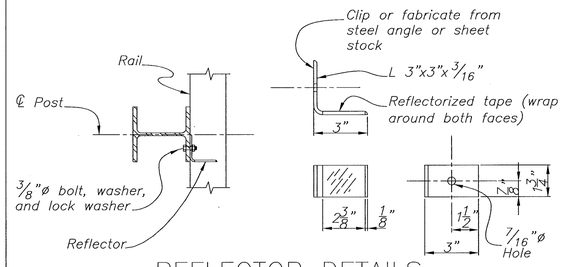

REFLECTOR DETAILS

Scale: 3"=1'–0"

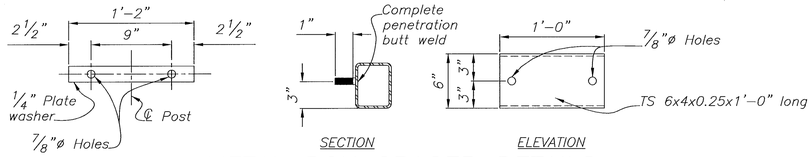

SECTION

ELEVATION

METAL BOX SPACER DETAILS

No Scale

DESIGNED C. J. Grimaldi DATE 6/98 DRAWN Zachary Hilliard 6/22/98 CHECKED Nancy Epton 6/22/98	U. S. DEPARTMENT OF AGRICULTURE FOREST SERVICE REGION FIVE	
RECOMMENDED: Nancy Epton DATE 6/22/98 P.O. STAFF ENGINEER TRANSPORTATION STRUCTURES APPROVED: for DATE 6/22/98 REGIONAL ENGINEER DISREGARD PRINTS BEARING EARLIER DATES	CASTLE CREEK BRIDGE ROAD NO. 39N25 RAILING DETAILS	
REVISION MARK AND DATE	SCALE: As Noted	BRIDGE SHEET 5 OF 7 DRAWING NUMBER R–1484–05

STATE	FOREST	PROJECT NO.	PROJECT NAME	SHEET	TOTAL SHEETS
CA	SHASTA-TRINITY				

NOTE: Steel Beam Guardrail shall conform to AASHTO M 180, Class B, Type II.

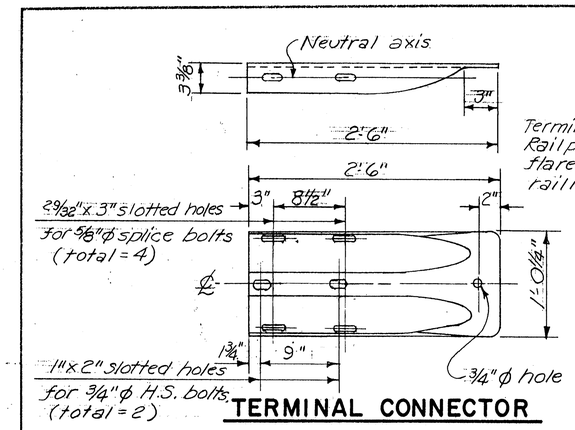

TERMINAL CONNECTOR

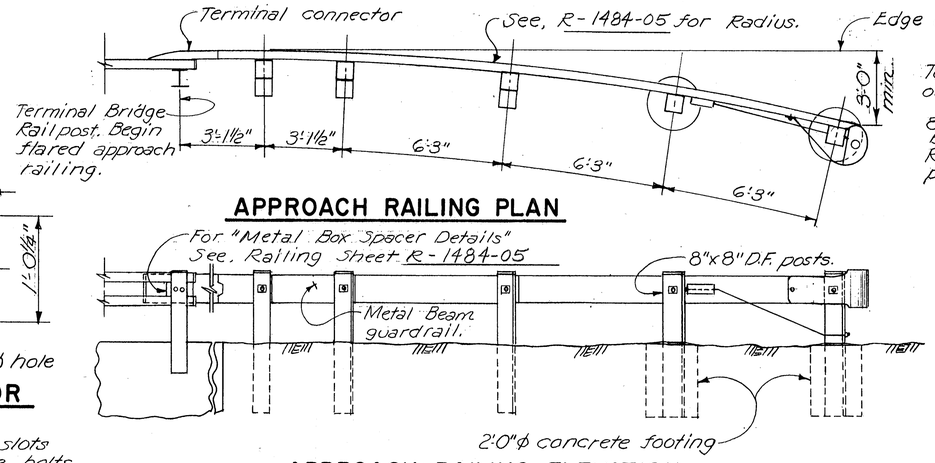

APPROACH RAILING PLAN

APPROACH RAILING ELEVATION

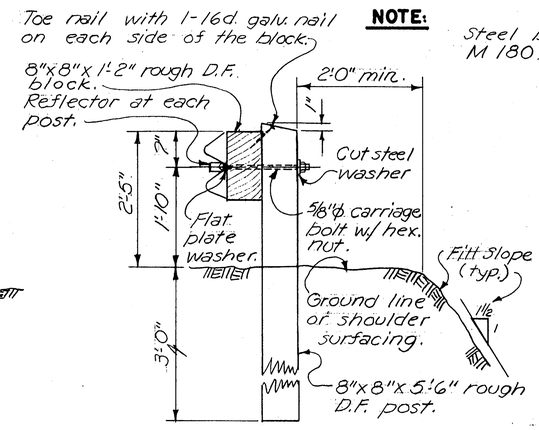

APPROACH RAILPOST

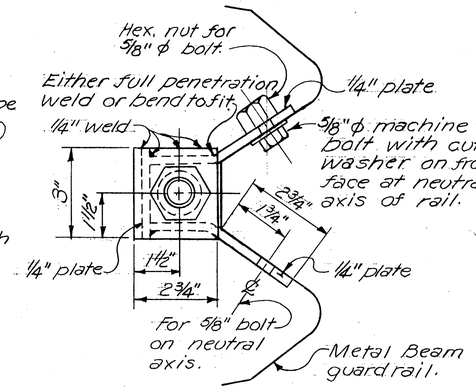

SECTION A-A

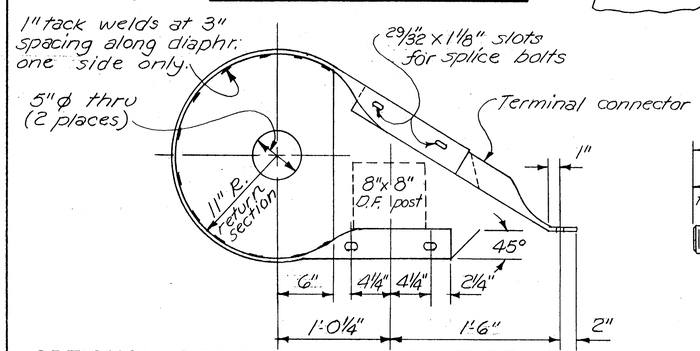

OPTIONAL DESIGN DIAPHRAGM TYPE TERMINAL SECTION

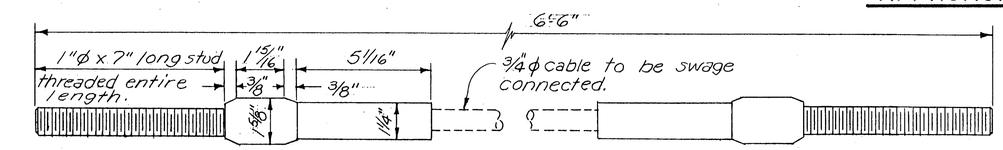

SWAGED FITTING AND STUD

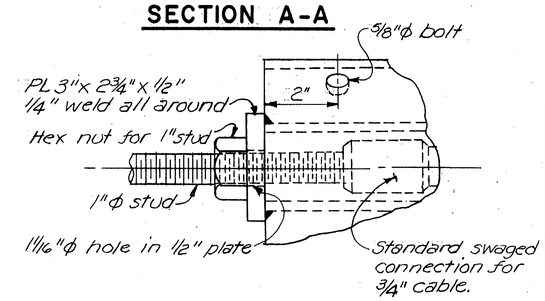

ANCHOR PLATE DETAILS

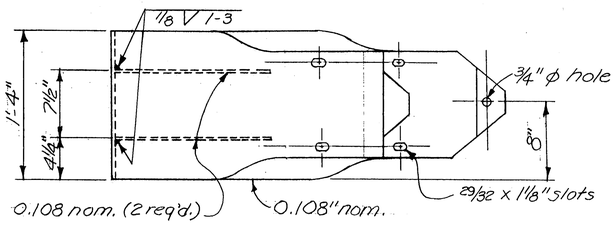

ELEVATION TERMINAL SECTION

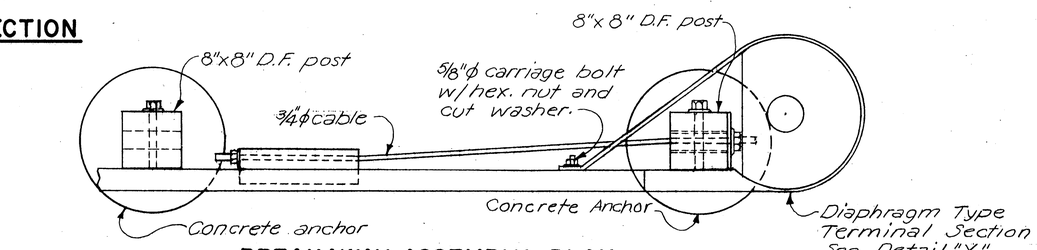

BREAKAWAY ASSEMBLY PLAN

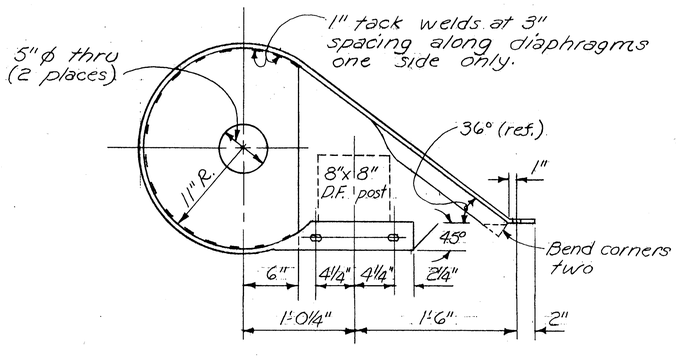

DIAPHRAGM TYPE TERMINAL SECTION

DETAIL "X"

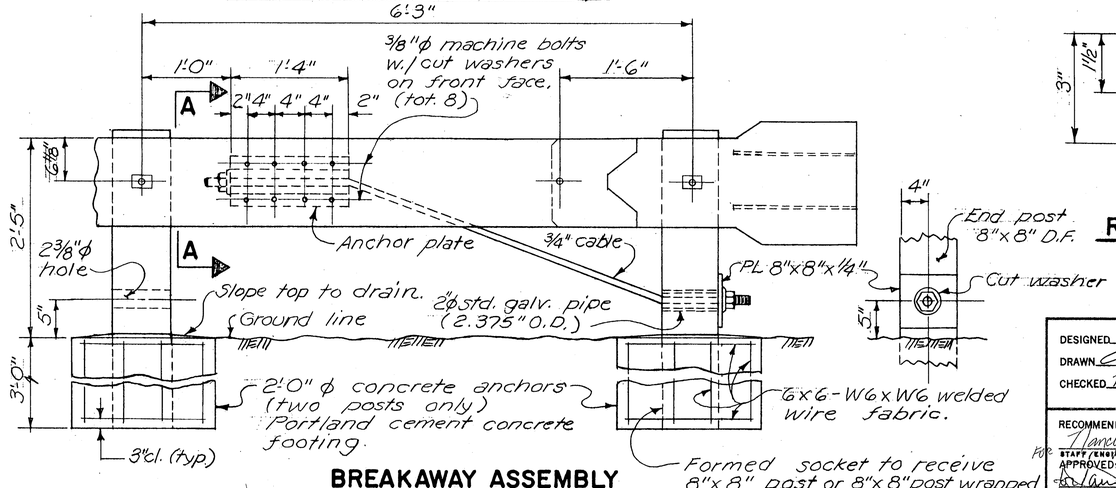

BREAKAWAY ASSEMBLY

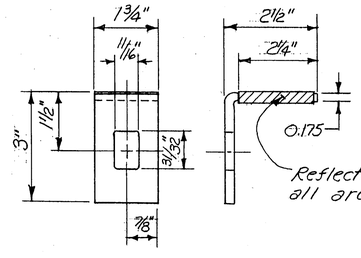

Place reflector angle on each approach post. Bolt angle using railing carriage bolts.

Reflective sheeting wrap all around angle surface.

REFLECTOR ANGLE FOR BEAM TYPE RAIL

DESIGNED C. J. Grimaldi DATE 6/98
DRAWN [illegible] 8/28/98
CHECKED Nancy Fopton 6/22/98
RECOMMENDED Nancy Fopton DATE 6/22/98
STAFF ENGINEER, TRANSPORTATION STRUCTURES
APPROVED: [illegible] DATE 6/22/98
REGIONAL ENGINEER
DISREGARD PRINTS BEARING EARLIER DATES
REVISION MARK AND DATE

U. S. DEPARTMENT OF AGRICULTURE
FOREST SERVICE
REGION FIVE

CASTLE CREEK BRIDGE
ROAD NO. 39N25

APPROACH RAILING DETAILS

SCALE: No Scale
BRIDGE SHEET 6 OF 7
STD. DRAWING NUMBER R-1352-01
R-1484 R-06 -

STATE	FOREST	PROJECT NO.	PROJECT NAME	SHEET	TOTAL SHEETS
CA	SHASTA-TRINITY				

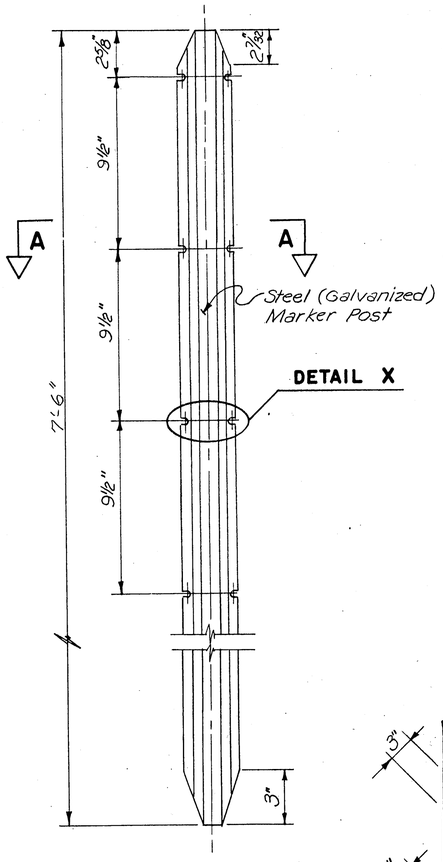

MARKER POST

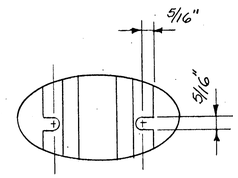

DETAIL X

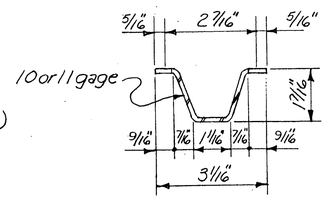

SECTION A-A

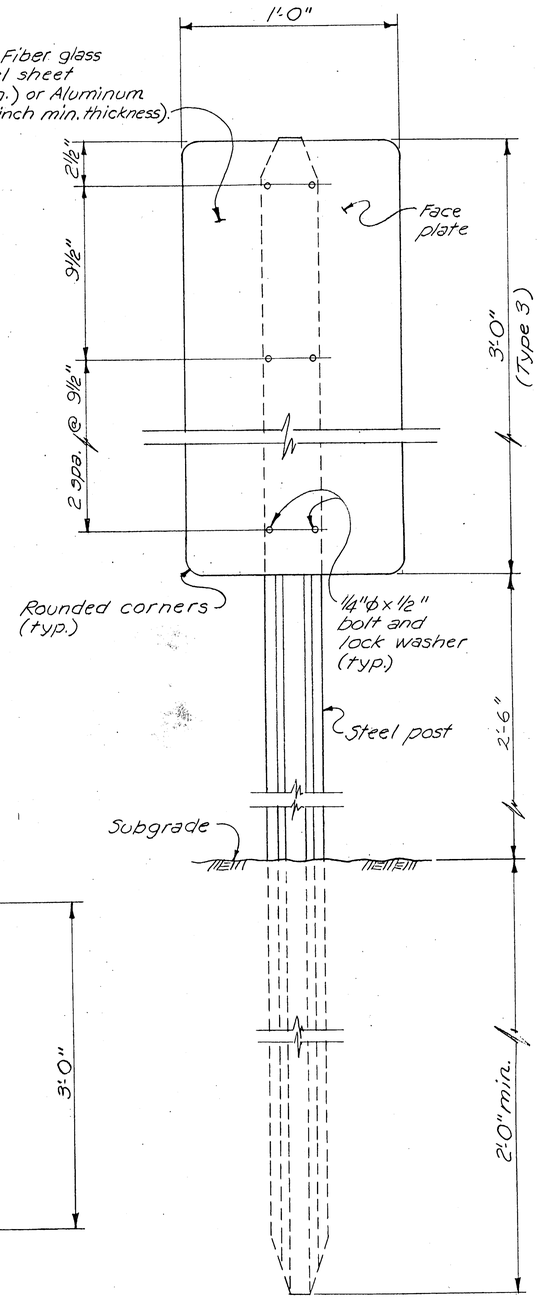

FRONT VIEW

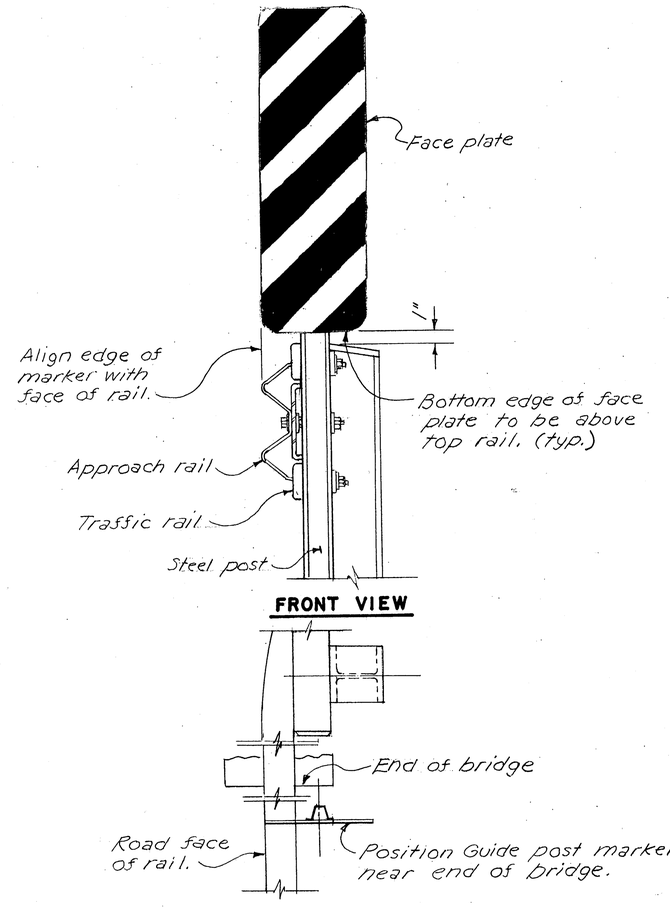

FRONT VIEW

PLAN

MARKER LOCATION

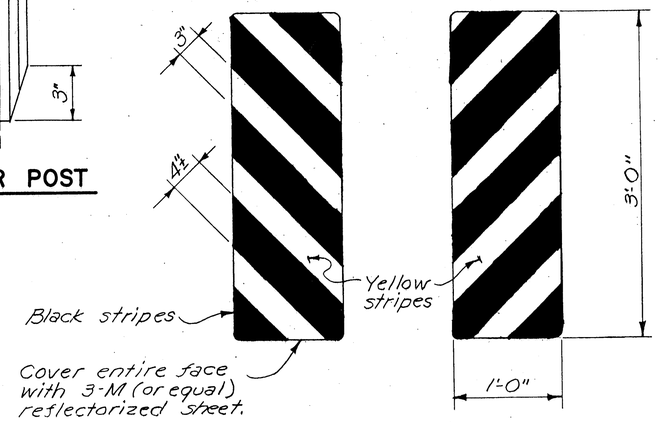

(LEFT) OM - 3L

(RIGHT) OM - 3R

TYPE 3

NOTES:

1. Metal Marker Post to be as shown except that minor variations in design and dimensions will be permitted to meet manufacturer standards.
2. Posts shall be galvanized in accordance with ASTM Designation A 123.
3. All metal surface of Face Plates shall be painted with a black enamel finish coat.

DESIGNED C. J. Drumaldi DATE 6/2/98	U. S. DEPARTMENT OF AGRICULTURE FOREST SERVICE REGION FIVE	
DRAWN Carl Paquette 12/1/86		
CHECKED Nancy Saplin 6/22/98	CASTLE CREEK BRIDGE ROAD NO. 39N25	
REVIEWED LEADER, FISHERIES MGMT. GROUP DATE		
RECOMMENDED FOR: STAFF ENGR. BRIDGES & STRUCTURES 6/22/98	OBJECT MARKERS	
APPROVED REGIONAL ENGINEER 6/22/98	SCALE: None	BRIDGE SHEET 7 OF 7
DISREGARD PRINTS BEARING EARLIER DATES		STANDARD NO. R-1337-01
REVISION MARK AND DATE		DRAWING NUMBER R-1484 R-07