GRAND CANYON PARASHANT NATIONAL MONUMENT, ARIZONA

345 EAST RIVERSIDE DRIVE
ST. GEORGE, UTAH 84790

INSTALL FIRE SUPPRESSION AT DELLENBAUGH ADMINISTRATION SITE

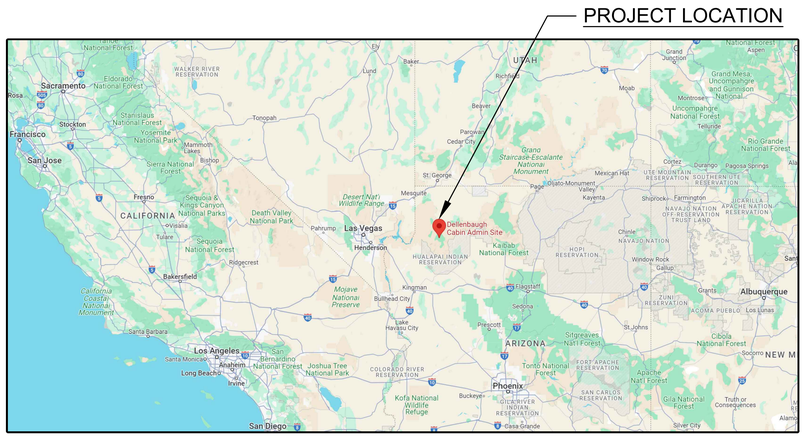

LOCATION MAP
NO SCALE

EBL FIRE ENGINEERING
DIVISION OF EBL ENGINEERS, LLC
8005 HARFORD ROAD
BALTIMORE, MARYLAND 21234-5701
410-668-8000 FAX 410-668-8001

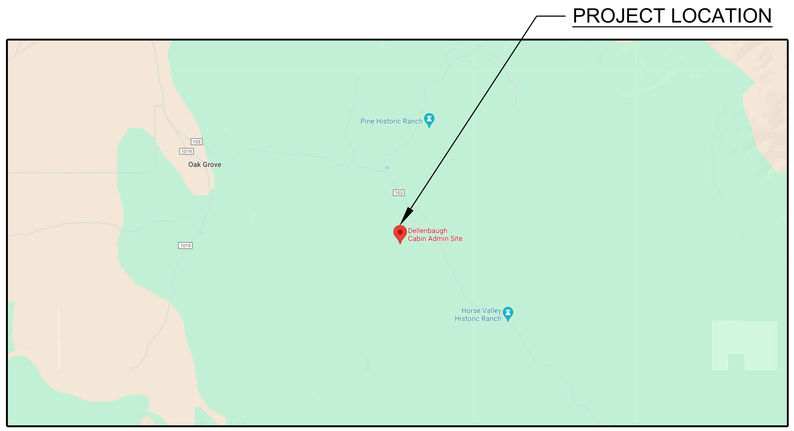

SITE MAP
NO SCALE

DRAWING LIST

SHEET # :	DRAWING# :	SHEET DESCRIPTION:
1 OF 18	G1	COVER SHEET
2 OF 18	E1	ELECTRICAL LEGEND, NOTES, ABBREVIATIONS, DETAILS, AND ONE-LINE DIAGRAM
3 OF 18	E2	ELECTRICAL SPECIFICATIONS
4 OF 18	E3	SITE PLAN - ELECTRICAL
5 OF 18	M1	MECHANICAL LEGEND, NOTES, ABBREVIATIONS, AND DETAILS
6 OF 18	M2	MECHANICAL SPECIFICATIONS
7 OF 18	M3	SITE PLAN - MECHANICAL

DRAWING LIST (CONTINUED)

SHEET # :	DRAWING# :	SHEET DESCRIPTION:
8 OF 18	FA1	FIRE ALARM GENERAL NOTES
9 OF 18	FA2	FIRE ALARM LEGEND, ABBREVIATIONS, RISER DIAGRAM, AND MATRIX
10 OF 18	FA3	FIRE ALARM SPECIFICATIONS
11 OF 18	FA4	FIRE ALARM SPECIFICATIONS
12 OF 18	FA5	CABIN FLOOR PLANS - FIRE ALARM

DRAWING LIST (CONTINUED)

SHEET # :	DRAWING# :	SHEET DESCRIPTION:
13 OF 18	FP1	FIRE PROTECTION GENERAL NOTES, LEGEND, AND ABBREVIATIONS
14 OF 18	FP2	FIRE PROTECTION SPECIFICATIONS
15 OF 18	FP3	FIRE PROTECTION SPECIFICATIONS
16 OF 18	FP4	SITE PLAN - FIRE PROTECTION
17 OF 18	FP5	CABIN FLOOR PLANS - FIRE PROTECTION
18 OF 18	FP6	CABIN SECTION - FIRE PROTECTION

Ibzan O. Ortiz
Digitally signed by Ibzan O. Ortiz
Date: 2025.01.02 16:02:42 -08'00'

100% SUBMISSION

PMIS/PKG. NO. 209050

NATIONAL PARK SERVICE

Registered Professional Engineer (Fire Protection) CERTIFICATE NO. 50042 JEFFERY P. McBRIDE DATE SIGNED 12/15/2024 ARIZONA U.S.A.

FP FIRM
EBL ENGINEERS ESTABLISHED 1972
Mechanical - Electrical - Fire Protection
8005 Harford Road
Baltimore, Maryland 21234-5701
Tel: (410) 668-8000
E-mail: ebl@eblengineers.com

Mark	REVISION	Date	Issued by
-	-	-	-

COVER SHEET
TITLE OF SHEET

G1
SUB SHEET NO.

UNITED STATES
DEPARTMENT OF THE INTERIOR
NATIONAL PARK SERVICE - INTERIOR REGION 8
DESIGN AND PROJECT MANAGEMENT

INSTALL FIRE SUPPRESSION AT DELLENBAUGH CABIN ADMIN SITE
TITLE OF PROJECT
GRAND CANYON PARASHANT, NATIONAL MONUMENT, ARIZONA
LOCATION WITHIN PARK
INSTALL FIRE SUPPRESSION AT DELLENBAUGH CABIN ADMIN SITE
TITLE OF PROJECT

DESIGNED: JPM
DRAWN: EBL
CHECKED: JPM
DWG. NO.: XX
XXXXXX
DATE: 08/02/2024
SHEET 1 OF 18

LEAN-TO STRUCTURE EXAMPLE

NOT TO SCALE

ELECTRICAL LEGEND

SYMBOL	DESCRIPTION
GFI	GFI RECEPTACLE - 20A., 125V. - MOUNTING HEIGHT 18" UNLESS NOTED OTHERWISE SPECIFIED
(J) , (J)	JUNCTION BOX - CEILING, WALL MOUNTED - SIZE PER NEC OR AS INDICATED
	PANELBOARD - EXISTING
	CONDUIT - IN OR ON CEILING OR WALLS
	CONDUIT - UNDERGROUND
	HOMERUN TO PANEL - NUMBER OF ARROWS INDICATE NUMBER OF CIRCUITS AND NUMBER OF CROSSLINES INDICATES NUMBER OF #12 PHASE & NEUTRAL CONDUCTORS - WHERE NO CROSSLINES APPEAR 2#12 CONDUCTORS ARE IMPLIED. GROUND WIRE IS NOT SHOWN BUT REQUIRED. PROVIDE #12 GROUND WIRE UNLESS OTHERWISE INDICATED.
C , R	CONTACTOR, RELAY - TYPE AS INDICATED OR REQUIRED
M	MOTOR - HORSEPOWER AS NOTED
G	GENERATOR - SIZE AND TYPE AS NOTED
	GROUND ROD
F ,	DISCONNECT SWITCH - FUSED, NON-FUSED - TYPE AND RATING AS INDICATED
,	MAGNETIC STARTER, COMBINATION TYPE STARTER - TYPE AND RATING AS INDICATED
S_K	KEY SWITCH - SINGLE POLE - MOUNTING HEIGHT 4'-0"
H	HANDHOLE - POLYMER CONCRETE ENCASED AND RATED FOR TIER 22 TRAFFIC LOADING - SIZE AS PER NEC
B	TIME DELAY AUXILIARY CONTACT BLOCK - TYPE TELEMECANIQUE LADT2 OR APPROVED EQUAL

ABBREVIATIONS

A	AMPERE
AC	ALTERNATING CURRENT
AFF	ABOVE FINISHED FLOOR
AFG	ABOVE FINISHED GRADE
AIC	AMPERES INTERRUPTING CAPACITY
BKR	BREAKER
C	CONDUIT
CB	CIRCUIT BREAKER
CLG	CEILING
CU	COPPER
DISC	DISCONNECT
DWG	DRAWING
EMT	ELECTRICAL METALLIC TUBING
ETR	EXISTING TO REMAIN
EX	EXISTING
F	FUSED OR FUSIBLE
FLA	FULL LOAD AMPERES
G	GROUND
GEN	GENERATOR
GFI	GROUND FAULT INTERRUPTER
HP	HORSEPOWER
JB	JUNCTION BOX
KV	KILO-VOLTS
KVA	KILO-VOLTS-AMPERES
KW	KILOWATTS
LRA	LOCKED ROTOR AMPERES
MAX	MAXIMUM
MIN	MINIMUM
MLO	MAIN LUGS ONLY
MTS	MANUAL TRANSFER SWITCH
NC	NORMALLY CLOSED
NEC	NATIONAL ELECTRICAL CODE
NF	NON-FUSED
NO	NORMALLY OPENED
NO.,#	NUMBER
P	POLE (1P., 2P., 3P.)
PV	PHOTOVOLTAIC
PVC	POLYVINYL CHLORIDE
RX	REMOVE EXISTING
S/N	SOLID NEUTRAL
SPD	SURGE PROTECTIVE DEVICE
SPDT	SINGLE-POLE DOUBLE-THROW
SPECS	SPECIFICATIONS
TYP	TYPICAL
UG	UNDERGROUND
V	VOLTS
W	WATTS
W/	WITH
WP	WEATHERPROOF

GENERAL NOTES: (APPLY TO ALL ELECTRICAL DRAWINGS)

1. ALL WIRE SIZES SHOWN ARE FOR COPPER CONDUCTORS.
2. DO NOT ROUTE CONDUIT EXPOSED ON BUILDING EXTERIOR. CONDUIT SHALL ENTER BUILDING AT CLOSEST POINT OF USAGE SERVING EXTERIOR EQUIPMENT UNLESS OTHERWISE INDICATED.
3. AMPACITY FOR CONDUCTORS 100 AMPS AND LESS SHALL BE BASED ON THE 60 DEGREE C AMPACITY RATING AS DEFINED BY THE NATIONAL ELECTRICAL CODE. CONDUCTORS FOR AMPACITIES GREATER THAN 100 AMPS SHALL BE BASED ON THE 75 DEGREE C RATING AS DEFINED BY THE NATIONAL ELECTRICAL CODE.
4. ELECTRICAL EQUIPMENT SUITABLE FOR EXTERIOR USE SHALL BE NEMA 3R RATED UNLESS OTHERWISE INDICATED.
5. ALL WORK SHALL COMPLY WITH ALL APPLICABLE CODES IN FORCE AT THE TIME OF CONSTRUCTION.
6. PROVIDE EQUIPMENT REQUIRING AIR CIRCULATION WITH THE CLEARANCE REQUIRED BY THE MANUFACTURER UNLESS OTHERWISE INDICATED.
7. ELECTRICAL CONTRACTOR SHALL COORDINATE ELECTRICAL EQUIPMENT INSTALLATION WITH OTHER TRADES.
8. FEEDER TAPS TO PARALLEL CONDUCTORS SHALL TAP ALL PARALLEL CONDUCTORS.
9. FOR PARALLEL CONDUCTORS, DO NOT RUN ALL OF THE SAME PHASES IN A SINGLE CONDUIT. EACH PARALLELED CONDUIT SHALL CONSIST OF ALL THREE PHASE WIRES, NEUTRAL AND GROUND, AS APPLICABLE.
10. THE CONTRACTOR SHALL FIELD CHECK AND VERIFY ALL DIMENSIONS AND ELEVATIONS OF EXISTING WORK PRIOR TO FABRICATION AND INSTALLATION OF NEW MATERIAL.
11. THE CONTRACTOR SHALL SATISFY THEMSELVES AS TO THE LOCATION OF EXISTING UTILITIES. FOR ALL UNDERGROUND WORK AND WHERE DRILLING OR CUTTING EXISTING CONCRETE FLOORS, CONTRACTOR SHALL USE GROUND PENETRATING RADAR TO EXAMINE THE CONCRETE FOR UTILITIES AND STRUCTURAL MEMBERS. IF ANY OBSTRUCTIONS ARE FOUND, THE CONTRACTOR SHALL MOVE TO ANOTHER LOCATION FREE OF OBSTRUCTIONS.
12. THE CONTRACTOR SHALL EXERCISE CARE WHEN WORKING NEAR AREAS THAT ARE EXISTING TO REMAIN. IF THE CONTRACTOR DAMAGES ANY OF THOSE AREAS DURING THE COURSE OF CONSTRUCTION, REPAIR IN-KIND WITHOUT CHARGE TO THE OWNER.
13. A SEPARATE GROUND AND NEUTRAL WIRE SHALL BE RUN WITH EACH FEEDER AND BRANCH CIRCUIT. GROUND WIRE SHALL BE SIZED AS REQUIRED BY THE NATIONAL ELECTRICAL CODE, UNLESS OTHERWISE INDICATED.
14. WHERE CIRCUIT BREAKERS ARE ADDED TO EXISTING PANELBOARDS, CIRCUIT BREAKERS SHALL MATCH THE PANELBOARD'S AIC RATING.
15. COORDINATE EXACT LOCATION AND MOUNTING HEIGHTS OF ALL DEVICES WITH NATIONAL PARK SERVICES PRIOR TO INSTALLATION.
16. WHERE ITEMS ARE REMOVED OR REPLACED, CONTRACTOR SHALL PATCH AND PAINT REMAINING EXPOSED SURFACES TO MATCH EXISTING ADJACENT SURFACES.
17. ALL INTERIOR AND EXTERIOR PENETRATIONS CREATED BY REMOVAL OR CREATED BY INSTALLATION SHALL BE SEALED AND/OR REPAIRED TO MATCH ADJACENT CONSTRUCTION AND FIRE RATINGS.
18. ALL ABANDONED PIPING, CONDUIT, ETC., SHALL BE REMOVED TO A POINT OF CONCEALMENT AND CAPPED. WIRING SHALL BE REMOVED TO SOURCE OR NEAREST POINT OF USAGE OUTSIDE THE SCOPE OF WORK.

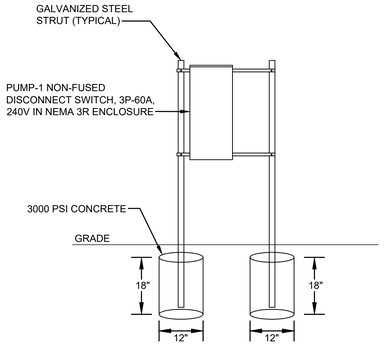

PUMP-1 DISCONNECT MOUNTING DETAIL

NO SCALE

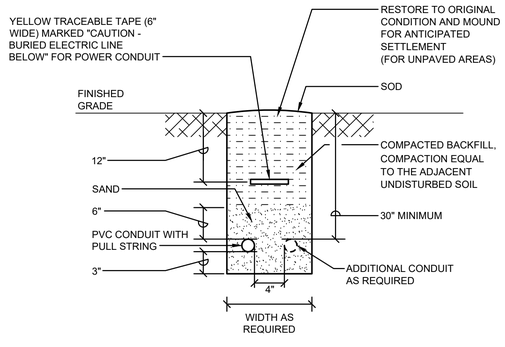

TRENCHING DETAIL

NO SCALE

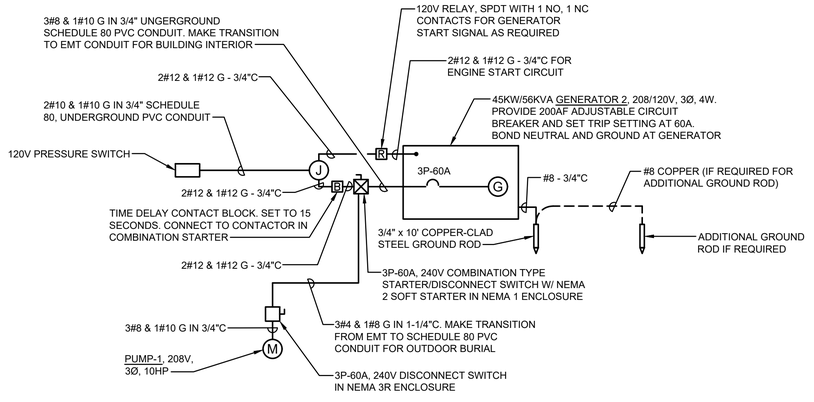

ONE-LINE DIAGRAM

NOT TO SCALE

NOTES:
1. CONTRACTOR SHALL MEASURE RESISTANCE TO EARTH OF GROUND ROD. IF RESISTANCE IS GREATER THAN 25 OHMS, CONTRACTOR SHALL PROVIDE ADDITIONAL GROUND ROD AS PER NEC 250.53 (A)(2). PROVIDE MINIMUM 10' DISTANCE BETWEEN GROUND RODS.
2. 120V PRESSURE SWITCH TO START GENERATOR ENGINE IMMEDIATELY UPON LOSS OF PRESSURE IN FIRE SPRINKLER ASSEMBLY. PUMP-1 SHALL START WITH A 15 SECOND DELAY AFTER GENERATOR.

100% SUBMISSION

PMIS/PKG. NO. 209050

NATIONAL PARK SERVICE

Registered Professional Engineer, Fire Protection — CERTIFICATE NO. 50042 — JEFFERY P. McBRIDE — DATE SIGNED 12/15/2023 — ARIZONA U.S.A.

FP FIRM
EBL ENGINEERS
ESTABLISHED 1972
Mechanical - Electrical - Fire Protection
8005 Harford Road
Baltimore, Maryland 21234-5701
Tel. (410) 668-8000
E-mail: info@eblengineers.com

Mark	REVISION	Date	Issued by
-	-	-	-

ELECTRICAL LEGEND, NOTES, ABBREVIATIONS, DETAILS & ONE-LINE DIAGRAM
TITLE OF SHEET

E1
SUB SHEET NO.

UNITED STATES DEPARTMENT OF THE INTERIOR
NATIONAL PARK SERVICE - INTERIOR REGION 8
DESIGN AND PROJECT MANAGEMENT

INSTALL FIRE SUPPRESSION AT DELLENBAUGH CABIN ADMIN SITE
TITLE OF PROJECT

GRAND CANYON PARASHANT, NATIONAL MONUMENT, ARIZONA
LOCATION WITHIN PARK

INSTALL FIRE SUPPRESSION AT DELLENBAUGH CABIN ADMIN SITE
TITLE OF PROJECT

DESIGNED	JPM
DRAWN	EBL
CHECKED	JPM
DWG. NO:	XX-XXXXXX
DATE:	08/02/2024
SHEET	2 OF 18

ELECTRICAL SPECIFICATIONS

SECTION 260000 - GENERAL ELECTRICAL REQUIREMENTS

1. PROVIDE ALL LABOR, MATERIALS, TOOLS, EQUIPMENT, SUPERVISION, SERVICES, ETC. NECESSARY FOR AND INCIDENTAL TO THE COMPLETE INSTALLATION OF ALL ELECTRICAL WORK AND RELATED SYSTEMS AS SHOWN ON THE DRAWINGS, SPECIFIED HEREIN, AND/OR REQUIRED TO DELIVER TO THE OWNER A COMPLETE INSTALLATION READY FOR CONTINUOUS AND SATISFACTORY OPERATION.

2. THE CONTRACTOR SHALL EXAMINE THE PREMISES PRIOR TO SUBMITTING HIS BID AND OBSERVE THE CONDITIONS UNDER WHICH THE WORK WILL BE DONE OR OTHER CIRCUMSTANCES WHICH WILL AFFECT THE CONTEMPLATED WORK. NO ALLOWANCE WILL BE MADE SUBSEQUENTLY IN THIS CONNECTION FOR ANY ERROR OR NEGLIGENCE ON THE CONTRACTOR'S PART.

3. THE CONTRACTOR SHALL SECURE AND PAY FOR ALL REQUIRED PERMITS.

4. THE CONTRACTOR SHALL SECURE AND PAY FOR ALL REQUIRED INSPECTIONS.

5. CERTIFICATES OF FINAL INSPECTION AND APPROVAL REQUIRED BY AGENCIES OR AUTHORITIES HAVING JURISDICTION SHALL COVER ALL ELECTRICAL WORK.

6. ALL ELECTRICAL EQUIPMENT AND SYSTEMS SHALL BE GUARANTEED BY THE CONTRACTOR FOR TWO (2) YEARS AFTER DATE OF ACCEPTANCE.

7. CONTRACTOR SHALL BE FULLY RESPONSIBLE FOR ALL REPAIRS AND ADJUSTMENTS TO EQUIPMENT AND SYSTEMS DURING THIS GUARANTEE PERIOD. CONTRACTOR SHALL BE RESPONSIBLE FOR SERVICING THE MANUFACTURERS WARRANTIES DURING THE WARRANTY PERIOD.

8. COMPLETE SHOP DRAWINGS AND MATERIAL LISTS SHALL BE SUBMITTED BY THE CONTRACTOR FOR THE APPROVAL OF THE ENGINEER IN ACCORDANCE WITH THE REQUIREMENTS OF THE GENERAL CONDITIONS. NO WORK SHALL BE FABRICATED OR ORDERED BY THE CONTRACTOR UNTIL APPROVAL HAS BEEN GIVEN BY THE ENGINEER.

9. THE ELECTRICAL WORK COVERED UNDER THE SPECIFICATIONS AND DRAWINGS SHALL BE PERFORMED IN STRICT ACCORDANCE WITH THE NATIONAL ELECTRICAL CODE (N.E.C), THE NATIONAL FIRE PROTECTION ASSOCIATION (NFPA 70), (NFPA 72), (NFPA 90A), (NFPA 101), (NFPA 1221), THE AMERICANS WITH DISABILITIES ACT (ADA), AND UL LABORATORIES (UL 1971).

10. THE CONTRACTOR SHALL PROVIDE TESTS AND ADJUSTMENTS FOR THE DISTRIBUTION SYSTEM (600 VOLTS AND BELOW) INCLUDING:

    A. THAT ALL LIGHTING, POWER AND CONTROL CIRCUITS ARE CONTINUOUS AND FREE FROM SHORT CIRCUITS.

    B. THAT ALL CIRCUITS ARE FREE FROM UNSPECIFIED GROUNDS.

    C. THAT THE RESISTANCE TO GROUND OF ALL NON-GROUNDED CIRCUITS IS LESS THAN ONE MEGOHM.

    D. THAT ALL CIRCUITS ARE PROPERLY CONNECTED IN ACCORDANCE WITH THE APPLICABLE WIRING DIAGRAMS.

    E. THAT ALL CIRCUITS ARE OPERABLE WHICH DEMONSTRATION SHALL INCLUDE FUNCTIONING OF EACH CONTROL NOT LESS THAN TEN TIMES AND CONTINUOUS OPERATION OF EACH LIGHTING AND POWER CIRCUIT FOR NOT LESS THAN 1/2 HOUR.

11. THE CONTRACTOR SHALL PROVIDE THE OWNER, UPON COMPLETION AND ACCEPTANCE OF THE WORK, WITH A SET OF REPRODUCIBLE RECORD DRAWINGS, CLEARLY SHOWING THE PATH OF THE UNDERGROUND SYSTEMS, LOCATIONS OF EQUIPMENT, AND ANY DIMENSIONAL CHANGES.

12. ALL EQUIPMENT (DISCONNECTS, PANELBOARDS, STARTERS, RELAYS, SWITCHES WITH PILOT LIGHTS, PUSHBUTTON STATIONS, ETC.) SHALL BE IDENTIFIED AS TO ITS FUNCTION, EQUIPMENT, OR AREA SERVED, ETC.

13. ON THE COMPLETION OF THE WORK, THE SYSTEMS AND EQUIPMENT SHALL BE CAREFULLY TESTED BY THE CONTRACTOR FOR ACTUAL OPERATION, AND THE VARIOUS PIECES OF EQUIPMENT MADE TO FUNCTION AS INTENDED. THE ENTIRE INSTALLATION WILL NOT BE READY FOR ACCEPTANCE UNTIL IT IS FUNCTIONING SMOOTHLY AND SATISFACTORILY.

14. ELECTRICAL CONTRACTOR SHALL COORDINATE ALL ELECTRICAL REQUIREMENTS FOR THE SUPPLIED MECHANICAL EQUIPMENT WITH THE MECHANICAL CONTRACTOR. ANY ELECTRICAL CHANGES OF THE MECHANICAL EQUIPMENT FROM THE BASIS OF DESIGN SHALL BE MADE BY THE ELECTRICAL CONTRACTOR AT NO ADDITIONAL CHARGES.

SECTION 260519 - WIRE (600 VOLTS)

1. ALL WIRING SHALL BE SOFT DRAWN COPPER, 98% CONDUCTIVITY, 600 VOLT INSULATION, N.E.C. TYPE THWN-2 (90°C INSULATION). TYPE USE-2 TO BE USED FOR DIRECT BURIED CABLE.

2. ALL WIRING SHALL HAVE IDENTIFICATION MARKINGS ALONG THEIR OUTER BRAID DENOTING CONDUCTOR SIZE, TYPE OF INSULATION, AND MANUFACTURER'S TRADE NAME. ALL WIRING SHALL BE COLOR CODED THROUGHOUT BRANCH CIRCUITS AS FOLLOWS:

PHASE	208/120 VOLTS
A	BLACK
B	RED
C	BLUE
NEUTRAL	WHITE
GROUND	GREEN

3. WIRE PULLING COMPOUNDS SHALL BE AS REQUIRED BY THE MANUFACTURER. THE USE OF OILS AND GREASES SHALL NOT BE PERMITTED.

4. ALL WIRING FOR 120 VOLTS GENERAL BRANCH CIRCUITS SHALL BE SIZED AS FOLLOWS, UNLESS OTHERWISE INDICATED:

HOME RUN LENGTH	WIRE SIZE
0 - 75'	#12
75 - 150'	#10
OVER 150'	#8

CIRCUIT LENGTH	WIRE SIZE
0 - 100'	#12
OVER 150'	#10

5. ALL SPLICING IN BRANCH CIRCUIT AND FEEDERS SHALL BE MADE IN OUTLET BOXES, JUNCTION BOXES, AND OUTLET ENCLOSURES APPROVED FOR THE PURPOSE. ALL SPLICES SHALL BE ACCESSIBLE.

6. ALL SPLICES IN COPPER FEEDERS AND BRANCH CIRCUIT WIRING FOR SIZES #12-#10 SHALL BE MADE WITH NON-TOOL, SELF-INSULATED, APPLIED WIRE CONNECTIONS WITH INTEGRAL SELF-LOCKING SPRING GRIP, IDEAL "WINGNUTS" OR APPROVED EQUIVALENT.

7. ALL SPLICES IN FEEDERS WITH BRANCH CIRCUIT WIRING FOR SIZES #8 AND LARGER SHALL BE MADE WITH MECHANICAL COMPRESSION TYPE CONNECTORS BY BURNDY, O-Z, T&B OR EQUAL.

8. WIRING FOR ENGINE START CIRCUIT SHALL BE STRANDED.

SECTION 260533 - RACEWAYS AND BOXES FOR ELECTRICAL SYSTEMS

1. ALL WIRING SHALL BE INSTALLED IN CONDUIT AS HEREINAFTER SPECIFIED, UNLESS INDICATED OTHERWISE.

2. RIGID METAL CONDUITS AND COUPLINGS SHALL BE FULL WEIGHT, HEAVY WALL STEEL, GALVANIZED, WITH THREADED CONNECTIONS CONFORMING TO THE LATEST EDITIONS AND REVISIONS OF ANSI STANDARD C-80.1, FEDERAL SPECIFICATION WW-C-581E AND LISTED BY UNDERWRITERS' LABORATORIES AS CONFORMING TO STANDARD UL 6.

3. ELECTRICAL METALLIC TUBING (E.M.T.) SHALL BE GALVANIZED, CONFORMING TO THE LATEST EDITIONS AND REVISIONS OF ANSI STANDARD C80.3, FEDERAL SPECIFICATION WW-C-563, AND LISTED BY UNDERWRITER'S LABORATORIES AS CONFORMING TO STANDARD 797.

4. POLYVINYL CHLORIDE (PVC) CONDUIT SHALL BE HEAVY WALL (TYPE 80) CONFORMING TO THE LATEST EDITIONS AND REVISIONS OF FEDERAL SPECIFICATION WC-1094, UNDERWRITER'S LABORATORIES, AND NEMA STANDARD TC-2.

5. FLEXIBLE METAL CONDUIT (FMC) SHALL BE STEEL, METAL STRIP INTERLOCKED CONSTRUCTION, ZINC-COATED, CONFORMING TO THE LATEST EDITIONS AND REVISIONS OF FEDERAL SPECIFICATION WW-C566B AND UNDERWRITERS' LABORATORIES STANDARD FOR FLEXIBLE STEEL CONDUIT, UL 1. LIQUID TYPE FLEXIBLE METAL CONDUIT SHALL BE "SEALTITE" TYPE UA WITH PVC COVER BY ANACONDA, OR APPROVED EQUAL, WITH LIQUID TYPE BOX CONNECTORS.

6. EMT CONDUIT SHALL BE USED FOR INDOOR APPLICATIONS, EXCEPT WHERE FLEXIBLE METAL CONDUIT IS PERMITTED. RIGID METAL CONDUIT SHALL BE USED IN EXTERIOR LOCATIONS. PVC SHALL BE USED FOR UNDERGROUND. MAKE TRANSITION FROM PVC TO RIGID GALVANIZED STEEL CONDUIT BELOW GRADE AT ELBOW TURNING UP.

7. FLEXIBLE METAL CONDUIT (FMC) SHALL BE USED:

    A. FOR CONNECTIONS TO MOTOR TERMINAL BOXES, DRY TYPE TRANSFORMERS, ENGINE GENERATORS AND OTHER VIBRATION PRODUCING EQUIPMENT, IN 18"-36" LENGTHS, LIQUID-TIGHT ONLY.

8. ALL CONDUITS INSTALLED EXPOSED SHALL BE RIGIDLY SUPPORTED AND SHALL CLOSELY FOLLOW CEILING AND BUILDING STRUCTURE CONTOURS.

9. CONDUITS PASSING FROM HEATED TO UNHEATED SPACES, EXTERIOR SPACES, REFRIGERATED SPACES, COLD AIR PLENUMS, ETC., SHALL BE SUITABLY SEALED WITH "DUXSEAL" BY JOHNS MANVILLE OR SEALING FITTINGS TO PREVENT ACCUMULATION OF CONDENSATION.

10. PROVIDE PULL ROPE IN ALL EMPTY CONDUITS.

11. ALL BOXES HEREIN SPECIFIED SHALL BE GALVANIZED STEEL OR CAST MALLEABLE IRON AND OF A TYPE SUITABLE FOR THE INTENDED USE.

12. MANUFACTURED BOXES SHALL BE APPLETON, RACO, STEEL CITY, CROUSE-HINDS, OR AN APPROVED EQUIVALENT.

13. BOXES IN EXTERIOR, DAMP OR WET LOCATIONS SHALL BE EQUIPPED WITH COVER GASKETS.

14. HANDHOLE BOXES SHALL BE POLYMER CONCRETE ENCASED AND DESIGNED TO MEET ANSI/SCTE 77 SPECIFICATIONS. HANDHOLE BOXES SHALL BE RATED FOR TIER 22 TRAFFIC LOADING. INSTALL HANDHOLE BOXES AS PER MANUFACTURER'S STANDARD FOR TIER 22 TRAFFIC LOADING.

SECTION 262726 - WIRING DEVICES

1. WIRING DEVICES SHALL BE PASS & SEYMOUR, ARROW-HART, HUBBELL, BRYANT, OR GENERAL ELECTRIC. DEVICE CATALOG NUMBERS LISTED BELOW ARE PASS & SEYMOUR UNLESS INDICATED OTHERWISE.

2. GROUND FAULT INTERRUPTING (GFI) TYPE RECEPTACLES SHALL BE POLARIZED, GROUNDING TYPE, 15 AMPERE, 120 VOLT, 2 POLE, 3 WIRE, DUPLEX, NEMA CONFIGURATION 5-15R, CATALOG NUMBER 1591-F1 (IVORY) WITH #93061 PLATE. PROVIDE WITH IN-USE, WEATHERPROOF COVER.

3. DEVICE PLATES SHALL BE AS FOLLOWS: FOR GENERAL USE, PLASTIC IVORY, WEATHERPROOF, CATALOG #4500 FOR SWITCH BOX OR #4510 FOR FS BOX.

SECTION 262816 - ENCLOSED SAFETY SWITCHES AND CIRCUIT BREAKERS

1. SAFETY SWITCHES SHALL BE CONSTRUCTED IN ACCORDANCE WITH THE LATEST EDITIONS AND REVISIONS OF NEMA STANDARD KS-1, FEDERAL SPECIFICATION W-S-865C AND UNDERWRITER'S LABORATORIES STANDARD 98. SAFETY SWITCHES USED FOR SERVICE ENTRANCE SHALL BE SERVICE ENTRANCE RATED AND BEAR THE UL SERVICE ENTRANCE LABEL.

2. SWITCHES SHALL BE FUSIBLE OR NON-FUSIBLE AS INDICATED ON THE DRAWINGS OR AS REQUIRED BY THE EQUIPMENT SERVED, HORSEPOWER RATED (U.L. LISTED), QUICK-MAKE, QUICK-BREAK, HEAVY-DUTY TYPE WITH INTEGRAL ARC SUPPRESSORS AND HANDLE AS PART OF ENCLOSURE, NOT COVER. WHERE THE FAULT CURRENT EXCEEDS 10,000 AMPS AT A NON-FUSED SAFETY SWITCH, PROVIDE A FUSED SAFETY SWITCH AND FUSE BASED ON THE SWITCH RATING UNLESS OTHERWISE INDICATED. ENCLOSED CIRCUIT BREAKER AMPERE INTERRUPTING CAPACITY SHALL EQUAL OR EXCEED THE AVAILABLE FAULT CURRENT AT THE ENCLOSED CIRCUIT BREAKER LOCATION.

3. SWITCHES ON 208/120 VOLTS SERVICE SHALL BE RATED 240 VOLTS.

4. SWITCHES SHALL BE MANUFACTURED BY GENERAL ELECTRIC, SQUARE D, CUTLER-HAMMER, OR SIEMENS.

SECTION 262913 - MOTOR STARTERS

1. ALL STARTERS SHALL BE CONSTRUCTED IN ACCORDANCE WITH THE LATEST EDITION AND REVISION OF NEMA STANDARDS.

2. PROVIDE REDUCED VOLTAGE SOFT STARTERS WHERE INDICATED ON THE DRAWINGS, IN SURFACE-MOUNTED N.E.M.A. 1 ENCLOSURES, UNLESS OTHERWISE INDICATED. MAGNETIC-STARTERS SHALL BE GENERAL ELECTRIC TYPE CR306, OR EQUAL, BY SQUARE D, CUTLER-HAMMER OR SIEMENS. EACH STARTER SHALL INCLUDE THE FOLLOWING:

    A. MANUAL RESET-TYPE OVERLOAD HEATERS, ONE IN EACH PHASE, WITH EXTERNAL RESET BUTTON, PROPERLY SIZED FOR THE MOTOR PROVIDED IN ACCORDANCE WITH THE MOTOR NAMEPLATE DATA.

    B. SOLID STATE OVERLOAD WITH ADJUSTABLE TRIP CURRENT, PHASE LOSS AND UNBALANCE PROTECTION. RELAYS SHALL BE AMBIENT INSENSITIVE AND SELF-POWERED. RELAY SHALL HAVE SELECTABLE 10/20 TRIP CLASS AND CLASS II GROUND FAULT DETECTION.

    C. A 120 VOLT CONTROL COIL AND CONTROL TRANSFORMER WITH 120 VOLT SECONDARY AND SECONDARY FUSED PROTECTION. SIZE FOR THE LOAD PLUS 50% SPARE CAPACITY.

    D. PROVIDE CONTROL (H-O-A) SWITCHES WITH EACH STARTER.

    E. PROVIDE RED "RUNNING" PILOT LIGHT.

    F. PROVIDE 1-30 SECOND ADJUSTABLE TIME DELAY CONTACT BLOCK WITH 1NO, 1NC CONTACT. PROVIDE ADDITIONAL AUXILIARY CONTROL CONTACTS AS REQUIRED BY THE CONTROL SEQUENCE.

    G. PROVIDE TIME DELAY CONTACTS OR RELAY TO START PUMP-1 15 SECONDS AFTER RECEIVING PUMP START SIGNAL FROM PRESSURE SWITCH.

SECTION 263213 - ENGINE GENERATORS

1. PROVIDE 45KW/56KVA, 208/120V, 3Ø, 4W, PACKAGED ENGINE - GENERATOR SET FOR STANDBY POWER SUPPLY. ENGINE SHALL BE PROPANE FUELED. GENERATOR SHALL BE CONNECTED TO THE EXISTING PROPANE LINES/TANK. COOLING SYSTEM AND CONTROL AND MONITORING PANEL SHALL BE UNIT MOUNTED.

2. PROVIDE WEATHER PROTECTIVE ENCLOSURE. PROVIDE MANUFACTURER'S STANDARD MUFFLER.

3. COMPLY WITH APPLICABLE STATE AND LOCAL GOVERNMENT REQUIREMENTS FOR ENGINE EXHAUST EMISSIONS.

4. PROVIDE VIBRATION ISOLATORS OF ENGINE SKID MOUNTS RECOMMENDED BY EQUIPMENT MANUFACTURER.

5. EQUIPMENT SHALL OPERATE WITHIN AN AMBIENT TEMPERATURE RANGE OF 0°-104°F AND FROM SEA LEVEL TO 2,200 FEET WITHOUT DE-RATING.

6. CONTRACTOR TO RE-USE EXISTING CONCRETE PAD FOR MOUNTING AND EXPAND EXISTING CONCRETE PAD AS REQUIRED. CAST ANCHOR-BOLT INSERT INTO BASES.

7. EQUIPMENT MANUFACTURER SHALL BE BY CATERPILLAR; KOHLER CO.; ONAN/CUMMINS POWER GENERATORS; SPECTRUM DETROIT DIESEL. BASIS OF DESIGN IS SPARK-IGNITED GENERATOR SET MODEL C45N6 BY CUMMINS POWER GENERATION.

8. NOMINAL POWER OUTPUT RATING AND VOLTAGE CHARACTERISTICS SHALL BE AS INDICATED ON THE DRAWINGS.

9. PROVIDE BATTERY CHARGER CURRENT LIMITING, AUTOMATIC EQUALIZING AND FLOAT CHARGING FOR BATTERY. BATTERY CHARGER SHALL BE 192 WATTS AT 120V.

10. GOVERNOR REGULATION CLASS SHALL BE ISO 8528 PART 1 CLASS G3. FREQUENCY REGULATION SHALL BE ISOCHRONOUS.

11. BATTERY CAPACITY SHALL BE 850 AMPS AT AMBIENT TEMPERATURE OF 0°F TO 32°F. BATTERY CHARGING ALTERNATOR SHALL BE 52 AMPS.

12. ENGINE GENERATOR SHALL SHUT DOWN ON OVERSPEED, HIGH AND LOW TEMPERATURE COOLANT, LOW OIL PRESSURE AND GENERATOR OVERLOAD.

13. GENERATOR SHALL BE CAPABLE OF MEETING NFPA 110 REQUIREMENTS WITHOUT ADDITIONAL ACCESSORIES.

14. PROVIDE ENGINE EXERCISER. PROVIDE COOLANT/BLOCK HEATER OF 1500 WATTS AT 120V.

100% SUBMISSION

PMIS/PKG. NO. 209050

NATIONAL PARK SERVICE

Registered Professional Engineer (Fire Protection) CERTIFICATE NO. 50042 JEFFERY P. McBRIDE DATE SIGNED 12/15/2024 ARIZONA U.S.A.

FP FIRM

EBL ENGINEERS ESTABLISHED 1972
Mechanical - Electrical - Fire Protection
8005 Harford Road
Baltimore, Maryland 21234-5701
Tel: (410) 668-8000
E-mail: ebl@eblengineers.com

Mark	REVISION	Date	Issued by
-	-	-	-

ELECTRICAL SPECIFICATIONS
TITLE OF SHEET

E2
SUB SHEET NO.

UNITED STATES
DEPARTMENT OF THE INTERIOR
NATIONAL PARK SERVICE - INTERIOR REGION 8
DESIGN AND PROJECT MANAGEMENT

INSTALL FIRE SUPPRESSION AT DELLENBAUGH CABIN ADMIN SITE
TITLE OF PROJECT

GRAND CANYON PARASHANT, NATIONAL MONUMENT, ARIZONA
LOCATION WITHIN PARK

INSTALL FIRE SUPPRESSION AT DELLENBAUGH CABIN ADMIN SITE
TITLE OF PROJECT

JPM
DESIGNED
EBL
DRAWN
JPM
CHECKED
DWG. NO.: XX XXXXXX
DATE: 08/02/2024

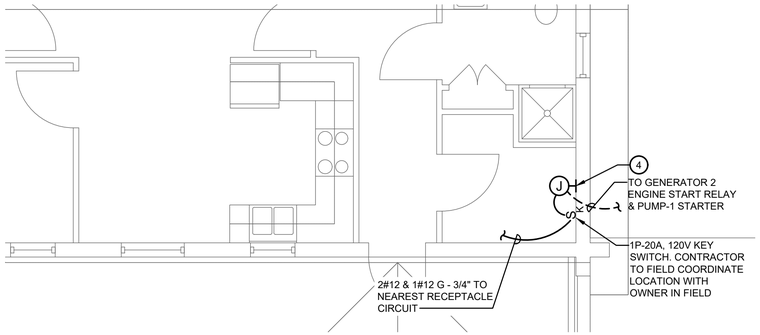

EXISTING CABIN PART PLAN - ELECTRICAL

SCALE: 1/4"=1'-0"

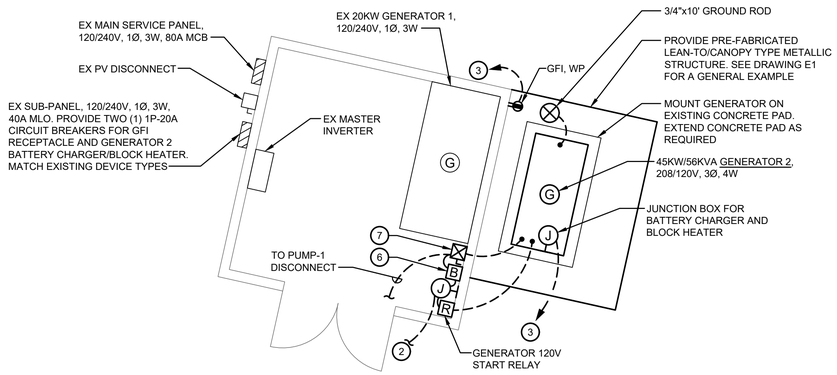

PART PLAN - EXISTING ELECTRICAL/PV BUILDING - ELECTRICAL

SCALE: 1/4"=1'-0"

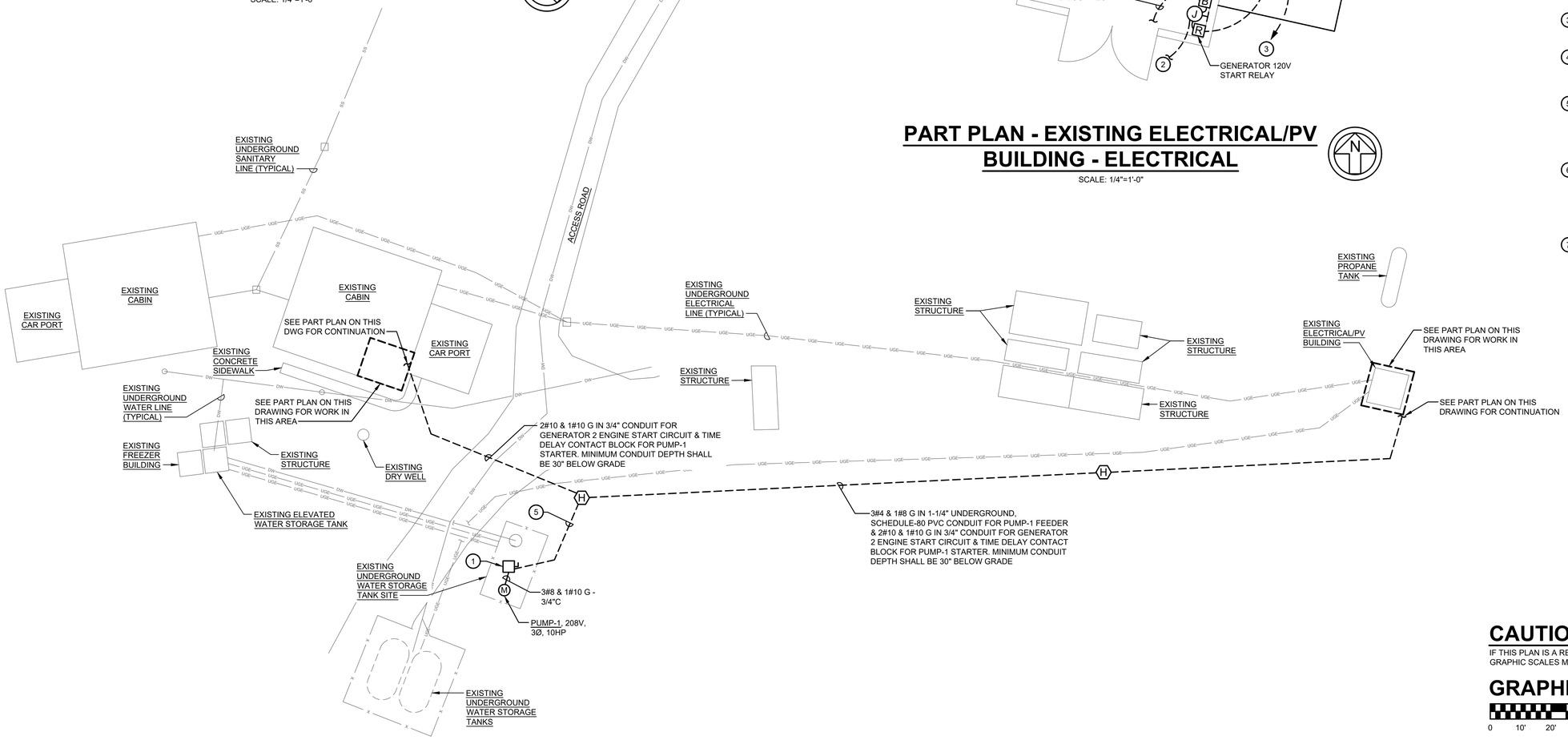

SITE PLAN - ELECTRICAL

SCALE: APPROX. 1"=20'-0"

GENERAL NOTES:

1. SEE ONE-LINE DIAGRAM AND DETAILS ON DRAWING E1 FOR MORE INFORMATION.
2. ALL UNDERGROUND CONDUITS SHALL BE PVC SCHEDULE 80, BURIED 30" BELOW GRADE.
3. ALL EXPOSED EXTERIOR ABOVE GRADE CONDUITS SHALL BE RIGID GALVANIZED STEEL.
4. ALL INTERIOR CONDUITS IN DRY LOCATION SHALL BE EMT.
5. AREAS COVERED IN STONE SURFACE SHALL BE RESTORED AND GRADED UPON COMPLETION OF TRENCHING.

DRAWING NOTES:

(APPLIES TO THIS SHEET ONLY)

1. PROVIDE 3P-60A, 240V DISCONNECT SWITCH IN NEMA 3R ENCLOSURE. MOUNT ON KINDORF RACK. SEE DETAIL ON DRAWING E1 FOR MORE INFORMATION.
2. 2#10 & 1#10 G - 3/4" C TO 120V PRESSURE SWITCH LOCATED IN MAIN CABIN. SEE SITE PLAN ON THIS DRAWING FOR CONTINUATION.
3. 2#12 & 1#12 GROUND IN 3/4" PVC SCHEDULE 80 CONDUIT TO 1P-20A CIRCUIT BREAKER IN EXISTING SUB-PANEL.
4. 120V PRESSURE SWITCH MOUNTED TO FIRE SPRINKLER RISER ASSEMBLY. SUPPLIED BY MECHANICAL CONTRACTOR, INSTALLED AND WIRED BY ELECTRICAL CONTRACTOR.
5. 3#4 & 1#8 G IN 1-1/4" UNDERGROUND SCHEDULE-80 PVC CONDUIT TO COMBINATION STARTER/DISCONNECT SWITCH LOCATED IN THE EXISTING ELECTRICAL/PV BUILDING. SEE PART PLAN ON THIS DRAWING FOR CONTINUATION. MINIMUM CONDUIT DEPTH SHALL BE 30" BELOW GRADE.
6. PROVIDE TELEMECANIQUE LADT2 OR EQUAL TIME DELAY AUXILIARY CONTACT BLOCK, 600V RATING, 10A, 1NO-1NC CONTACT AND BUILT-IN 0.1-30 SECOND ADJUSTABLE 'ON' DELAY FUNCTION. SET TIME DELAY CONTACT BLOCK TO 15 SECONDS. CONTRACTOR TO FIELD COORDINATE EXACT LOCATION WITH OWNER IN THE FIELD.
7. PROVIDE 3P-60A, 240V COMBINATION STARTER/DISCONNECT SWITCH WITH NEMA 2 SOFT STARTER IN NEMA 1 ENCLOSURE. CONTRACTOR TO FIELD COORDINATE EXACT LOCATION WITH OWNER IN THE FIELD.

CAUTION:

IF THIS PLAN IS A REDUCTION, GRAPHIC SCALES MUST BE USED.

GRAPHIC SCALE

1"=20'-0"

0 10' 20' 40' 60'

GRAPHIC SCALE

1/4"=1'-0"

0 2' 4' 8' 12'

100% SUBMISSION

PMIS/PKG. NO. 209050

NATIONAL PARK SERVICE

Registered Professional Engineer (Fire Protection) CERTIFICATE NO. 50042 JEFFERY P. McBRIDE DATE SIGNED 12/15/2023 ARIZONA U.S.A.

FP FIRM

EBL ENGINEERS ESTABLISHED 1972

Mechanical - Electrical - Fire Protection

8005 Harford Road
Baltimore, Maryland 21234-5701
Tel: (410) 668-8000
E-mail: ebl@eblengineers.com

Mark	REVISION	Date	Issued by
-	-	-	-

SITE PLAN - ELECTRICAL

TITLE OF SHEET

E3

SUB SHEET NO.

UNITED STATES
DEPARTMENT OF THE INTERIOR
NATIONAL PARK SERVICE - INTERIOR REGION 8
DESIGN AND PROJECT MANAGEMENT

INSTALL FIRE SUPPRESSION AT DELLENBAUGH CABIN ADMIN SITE
TITLE OF PROJECT

GRAND CANYON PARASHANT, NATIONAL MONUMENT, ARIZONA
LOCATION WITHIN PARK

INSTALL FIRE SUPPRESSION AT DELLENBAUGH CABIN ADMIN SITE
TITLE OF PROJECT

DESIGNED	JPM
DRAWN	EBL
CHECKED	JPM
DWG. NO:	XX
	XXXXXX
DATE:	08/02/2024
SHEET	4 OF 18

MECHANICAL ABBREVIATIONS

ABBREVIATION	DESCRIPTION
Ø OR DIA	DIAMETER
@	AT
CX	CONNECT TO EXISTING
EX	EXISTING
FLA	FULL LOAD AMPS
GPM	GALLONS PER MINUTE
HD	HEAD
HP	HORSE POWER
POD	POINT OF DISCONNECT
RLX	RELOCATE EXISTING
RX	REMOVE EXISTING
TYP	TYPICAL
V/PH/HZ	VOLTS/PHASE/HERTZ

MECHANICAL LEGEND

SYMBOL	ABBREV	DESCRIPTION
	CW	COLD WATER; DOMESTIC
	PRV	PRESSURE REDUCING VALVE
		SOLENOID VALVE
		FLEXIBLE PIPE CONNECTOR
		BACKFLOW PREVENTER; DIRECTION OF FLOW INDICATED
		SHUT OFF VALVE (SEE SPECIFICATION FOR TYPE)
		SHUT OFF VALVE IN VERTICAL (SEE SPECIFICATION FOR TYPE)
		CHECK VALVE; DIRECTION OF FLOW INDICATED
		BALL VALVE
		BUTTERFLY VALVE
	CX	CONNECT TO EXISTING
	POD	POINT OF DISCONNECT

GENERAL NOTES: (APPLY TO ALL DRAWINGS)

1. ALL WORK SHALL BE NEW, PROVIDED AND INSTALLED UNDER THIS CONTRACT UNLESS SPECIFICALLY MARKED EXISTING, EX, EXISTING TO REMAIN, OR ETR.
2. THE LOCATION OF EXISTING UTILITIES IS SHOWN IN AN APPROXIMATE WAY ONLY. DETERMINE THE EXACT LOCATION OF ALL EXISTING UTILITIES BEFORE COMMENCING WORK. REPAIR ALL DAMAGES OCCASIONED BY FAILURE TO EXACTLY LOCATE AND PRESERVE ANY AND ALL UNDER GROUND UTILITIES.
3. MAINTAIN MINIMUM OF 4'-0" COVER OVER UNDERGROUND WATER MAINS.
4. COORDINATE ALL MECHANICAL WORK WITH ELECTRICAL WORK, ETC., SHOWN ON OTHER DRAWINGS.
5. CERTAIN ITEMS SUCH AS ACCESS DOORS, CLEANOUTS, RISE AND DROPS IN DUCTWORK AND PIPING, ETC., ARE INDICATED ON THE DRAWINGS FOR CLARITY OR A SPECIFIC LOCATION REQUIREMENT AND SHALL NOT BE INTERPRETED AS THE EXTENT OF THE REQUIREMENTS FOR THESE ITEMS. THE CONTRACTOR SHALL BE RESPONSIBLE FOR THESE ITEMS AS REQUIRED ELSEWHERE IN THE CONTRACT DOCUMENTS.
6. WHERE THE INSTALLATION OF NEW SERVICES OR THE EXTENSION OF EXISTING SERVICES REQUIRE CUTTING OF EXISTING FLOORS, WALLS, PARTITIONS, ETC., IT SHALL BE THE RESPONSIBILITY OF THE CONTRACTOR TO CHECK FOR THE PRESENCE OF EXISTING MECHANICAL AND/OR ELECTRICAL SERVICES WITHIN OR IMMEDIATELY BENEATH CONSTRUCTION AND EXERCISE NECESSARY PRECAUTIONS TO PREVENT DAMAGE TO THE SERVICES OR INJURY TO PERSONNEL DUE TO CONTACT WITH SAME. WHERE PRACTICAL, SUCH EXISTING SERVICES SHALL BE TEMPORARILY DISCONNECTED DURING THE CUTTING OPERATION. SUCH OUTAGES IN SERVICE SHALL BE SCHEDULED IN ADVANCE WITH THE OWNER.
7. FLOW SCHEMATIC AND RISER DIAGRAMS INDICATE FLOW AND OPERATION CONCEPT AS WELL AS GENERAL ARRANGEMENT OF EQUIPMENT. VALVES, PRESSURE GAUGES, ETC. ARE INDICATED FOR THIS PURPOSE. ADDITIONAL VALVES, PRESSURE GAUGES, ETC. SHALL BE PROVIDED AS SHOWN ON VARIOUS EQUIPMENT DETAILS. SEE PLANS AND DETAILS FOR PIPE SIZES NOT INDICATED ON FLOW SCHEDULE AND RISER DIAGRAMS.
8. ALL INTERIOR AND EXTERIOR PENETRATIONS CREATED BY REMOVAL OR CREATED BY INSTALLATION SHALL BE SEALED AND/OR REPAIRED TO MATCH ADJACENT CONSTRUCTION AND FIRE RATINGS.

PUMP SCHEDULE

UNIT NO.	LOCATION	SERVICE	FLUID	GPM	HEAD (PSI)	ELECTRICAL HP-V/PH/HZ	TYPE	NOTES	REMARKS
PUMP-1	WATER TANK	FIRE SUPRESSION	WATER	192	51.5	10-208/3/60	SB	1	-
-	-	-	-	-	-	-	-	-	-
-	-	-	-	-	-	-	-	-	-

TYPE:
IL IN-LINE CIRCULATOR
BM BASE-MOUNTED
CC CLOSE-COUPLED
SB SUBMERSIBLE

NOTES:
1. OPERATES TO MAINTAIN PRESSURE IN PIPE AT ENTRANCE TO CABINS

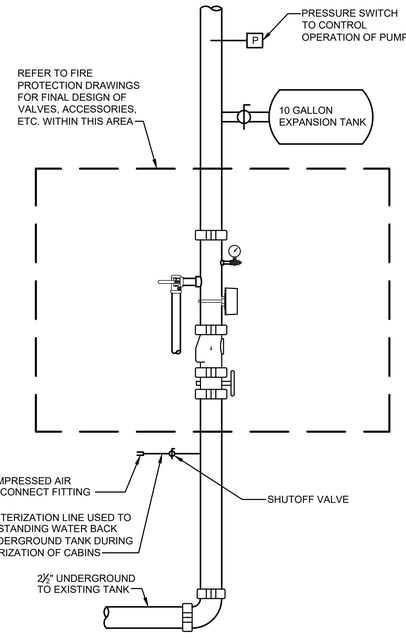

SYSTEM WINTERIZATION DETAIL

NO SCALE

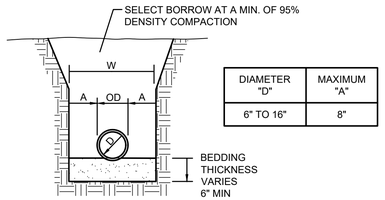

DIAMETER "D"	MAXIMUM "A"
6" TO 16"	8"

MAXIMUM TRENCH WIDTH "W" TAKEN AT TOP OF PIPE

NOTE:

1. PROVIDE BEDDING IN ACCORDANCE WITH SPECIFICATIONS

PIPE TRENCH DETAIL

NO SCALE

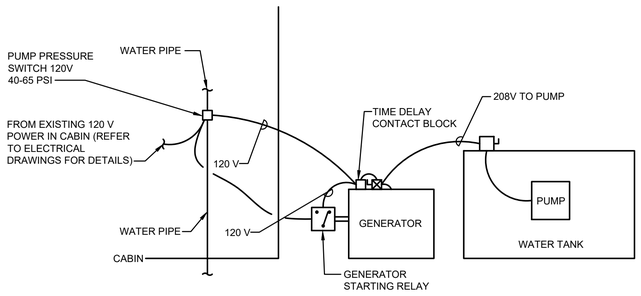

PUMP POWER/CONTROL SCHEMATIC

NO SCALE
NOTE: REFER TO ELECTRICAL DRAWINGS FOR DETAILS. ALL DEVICES TO BE PROVIDED BY ELECTRICAL CONTRACTOR.

DRAWING NOTES: (APPLY TO THIS DRAWING ONLY)

1. WEATHER TIGHT JUNCTION BOX.
2. ELECTRICAL SUPPLY TO JUNCTION BOX.
3. PUMP ELECTRICAL CONNECTIONS PER MANUFACTURER'S RECOMMENDATIONS
4. LOW AND HIGH WATER LEVEL ELECTRICAL CONNECTIONS PER MANUFACTURER'S RECOMMENDATIONS.
5. 2½" PRESSURE RATED STAINLESS FLEX WITH BRAIDED JACKET.
6. FEMALE ADAPTER FOR HDPE WATER LINE.
7. BRASS PITLESS ADAPTER WITH RELIEF VALVE.
8. SCHEDULE 80 NPT ADAPTER.
9. 2½" DIAMETER SCHEDULE 80 PIPE.
10. SUBMERSIBLE PUMP-1
11. PUMP HAS INLET SECTION AT BOTTOM OF HOUSING.
12. SINGLE FLOAT; LOW WATER LEVEL PUMP SHUTDOWN.
13. FLOAT TREE MOUNT.
14. ADJUSTABLE FLOAT TREE, FIELD INSTALLED.
15. LOCKING CLAMP FOR FLOAT TREE.
16. T HANDLE, FIELD INSTALLED.
17. TORQUE ARRESTOR.
18. SINGLE FLOAT; HIGH WATER ALARM.
19. TANK WATER LEVEL INDICATOR GAUGE, 24" ABOVE GRADE.

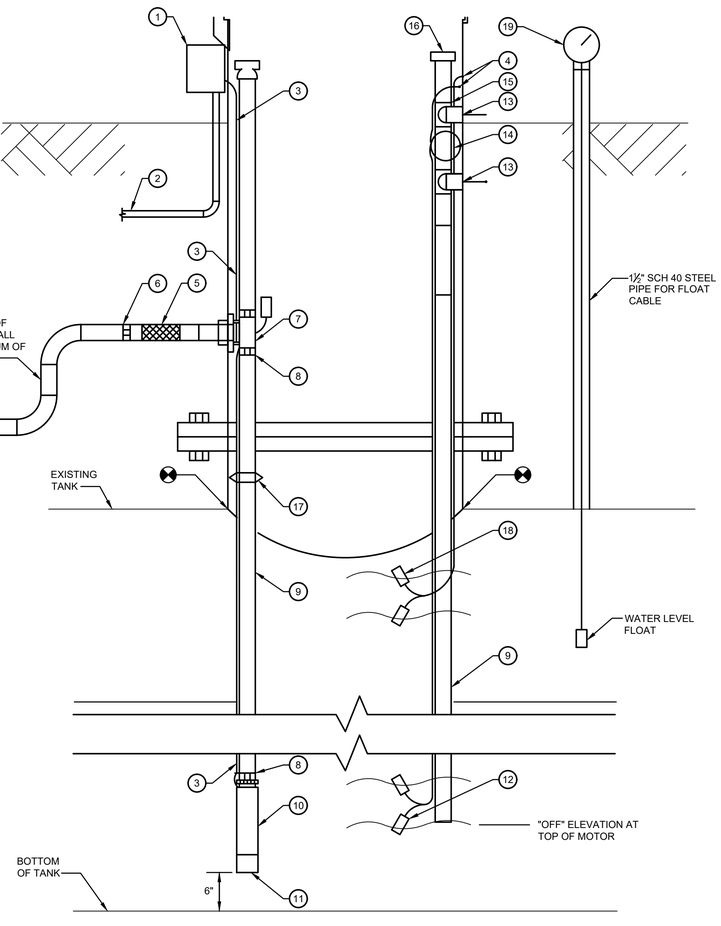

PUMP INSTALLATION DETAIL

NO SCALE

100% SUBMISSION

PMIS/PKG. NO. 209050

NATIONAL PARK SERVICE

Registered Professional Engineer, Fire Protection — CERTIFICATE NO. 50042 JEFFERY P. McBRIDE — State Signed 12/11/2023 — ARIZONA U.S.A.

FP FIRM

EBL ENGINEERS ESTABLISHED 1972
Mechanical - Electrical - Fire Protection
8005 Harford Road
Baltimore, Maryland 21234-5701
Tel. (410) 668-6000
E-mail: ebl@eblengineers.com

Mark	REVISION	Date	Issued by
-	-	-	-

MECHANICAL LEGEND, NOTES, ABBREVIATIONS & DETAILS
TITLE OF SHEET

M1
SUB SHEET NO.

UNITED STATES
DEPARTMENT OF THE INTERIOR
NATIONAL PARK SERVICE - INTERIOR REGION 8
DESIGN AND PROJECT MANAGEMENT

INSTALL FIRE SUPPRESSION AT DELLENBAUGH CABIN ADMIN SITE
TITLE OF PROJECT
GRAND CANYON PARASHANT, NATIONAL MONUMENT, ARIZONA
LOCATION WITHIN PARK
INSTALL FIRE SUPPRESSION AT DELLENBAUGH CABIN ADMIN SITE
TITLE OF PROJECT

JPM DESIGNED
EBL DRAWN
JPM CHECKED
DWG. NO.: XX
XXXXXX
DATE: 08/02/2024
SHEET 5 OF 18

SECTION 01000 - GENERAL REQUIREMENTS

1. THE FOLLOWING DRAWINGS SHALL BE CONSIDERED BIDDING DOCUMENTS TO RELAY THE DESIGN INTENT TO THE INSTALLING CONTRACTOR(S). THE CONTRACTOR(S) SHALL BE RESPONSIBLE TO PROVIDE AND INSTALL SYSTEMS WHICH MEET THE INTENT OF THE DOCUMENTS. THE CONTRACTOR(S) SHALL BE RESPONSIBLE FOR THE FINAL DESIGN, INSTALLATION AND COORDINATION OF THE SYSTEMS. LIMITS OF WORK, FINAL SCOPE, INCLUSIONS, EXCLUSIONS SHALL BE COORDINATED WITH THE COR AND CLEARLY DEFINED IN CONTRACTOR'S BID.

2. RELATED DOCUMENTS: THE GENERAL PROVISIONS OF THE CONTRACT, INCLUDING GENERAL CONDITIONS, SUPPLEMENTARY CONDITIONS AND GENERAL REQUIREMENTS APPLY TO THE WORK SPECIFIED IN THIS SECTION AND ARE HEREBY MADE A PART OF THIS SECTION.

3. PLUMBING SYSTEM:

   DESCRIPTION OF WORK: (PLUMBING WORK SHALL INCLUDE., BUT IS NOT LIMITED TO; INSTALLATION OF SUBMERSIBLE PUMP, ACCESSORIES AND PIPING TO SUPPORT FIRE PROTECTION WATER SYSTEM)

   THIS SECTION REQUIRES THE FURNISHING AND INSTALLING OF COMPLETE FUNCTIONING SYSTEMS,IN ACCORDANCE WITH THE DESIGN DOCUMENTS AND REGULATING PLUMBING CODE. PROVIDE WATER CONNECTIONS TO ALL FIXTURES AND EQUIPMENT (INCLUDING EQUIPMENT PROVIDED BY OTHERS), DEVICES OR ACCESSORIES (WHETHER OR NOT SPECIFICALLY CALLED FOR BY ITEM) REASONABLY NECESSARY TO FACILITATE EACH SYSTEM FUNCTIONING AS INDICATED BY THE DESIGN AND EQUIPMENT SPECIFIED.

4. MEASUREMENTS AND LAYOUTS: THE DRAWINGS ARE INTENDED TO COVER THE LAYOUT AND DESIGN OF THE WORK AND ARE NOT TO BE SCALED FOR EXACT MEASUREMENTS. WHERE SPECIFIC DETAIL AND DIMENSION FOR MECHANICAL WORK ARE NOT SHOWN ON THE DRAWINGS, THE MECHANICAL CONTRACTOR SHALL TAKE MEASUREMENTS AND MAKE LAYOUTS AS REQUIRED FOR THE PROPER INSTALLATION OF THE MECHANICAL WORK IN COORDINATION WITH ALL OTHER WORK ON THE PROJECT.

5. PROVIDE ALL LABOR, MATERIALS, TOOLS, EQUIPMENT, SUPERVISION, SERVICES, ETC. NECESSARY FOR AND INCIDENTAL TO THE COMPLETE INSTALLATION OF ALL MECHANICAL WORK AND RELATED SYSTEMS AS SHOWN ON THE DRAWINGS, SPECIFIED HEREIN, AND/OR REQUIRED TO DELIVER TO THE GOVERNMENT A COMPLETE INSTALLATION READY FOR CONTINUOUS AND SATISFACTORY OPERATION. ALL ITEMS, SYSTEMS, ETC. NECESSARY OR REQUIRED TO MAKE THE MECHANICAL AND ELECTRICAL INSTALLATION COMPLETE AND OPERABLE SHALL BE UNDERSTOOD AS PART OF THE WORK. THE CONTRACTOR SHALL EXAMINE THE PREMISES PRIOR TO SUBMITTING HIS BID.

6. THE CONTRACTOR SHALL SECURE AND PAY FOR ALL REQUIRED PERMITS BEYOND THE GENERAL BUILDING PERMIT AND INSPECTIONS. FURNISH ALL APPLICABLE CERTIFICATES.

7. ALL MECHANICAL EQUIPMENT AND SYSTEMS SHALL BE GUARANTEED BY THE CONTRACTOR FOR TWO (2) YEARS AFTER DATE OF ACCEPTANCE OR AS NOTED.

8. THE CONTRACTOR SHALL SUBMIT COMPLETE ELECTRONIC COPIES OF SUBMITTALS AND EQUIPMENT LISTS FOR ALL PRODUCTS FOR REVIEW AND APPROVAL BY ARCHITECT AND/OR ENGINEER. SUBMITTALS SHALL INCLUDE CONTRACTOR'S TRANSMITTAL AND COVER LETTER INDICATING CONFORMANCE TO SPECIFICATIONS, SPECIFICATION SECTION, SPECIFIC APPLICATION AS RELATED TO DESIGN DOCUMENTS, MANUFACTURER'S SELECTION SHEETS, SPECIFIC PRODUCT INFORMATION, MODEL NUMBERS, CAPACITIES, MATERIALS, AND INCLUDED ACCESSORIES.

9. ALL MATERIALS AND EQUIPMENT SHALL BE PROPERLY AND EFFECTIVELY PROTECTED BY THE CONTRACTOR DURING THE EXECUTION OF THE WORK.

10. THE MECHANICAL WORK COVERED UNDER THE SPECIFICATIONS AND DRAWINGS SHALL BE PERFORMED IN STRICT ACCORDANCE WITH: STATE AND LOCAL CODES, LATEST EDITION, APPROPRIATE STANDARDS OF THE NATIONAL FIRE PROTECTION ASSOCIATION (NFPA); APPLICABLE LOCAL CODES; AMERICAN NATIONAL STANDARDS INSTITUTE (ANSI); AMERICAN SOCIETY FOR TESTING AND MATERIALS (ASTM); AND THE OCCUPATIONAL SAFETY & HEALTH ACT (OSHA).

11. THE CONTRACTOR SHALL HAVE COMPETENT SUPERVISION ON THE SITE AT ALL TIMES TO LAYOUT, CHECK, COORDINATE AND SUPERVISE THE INSTALLATION OF ALL MECHANICAL WORK AND BE RESPONSIBLE FOR THE ACCURACY THEREOF. HE SHALL PLAN THE INSTALLATION OF ALL MECHANICAL WORK, GIVING CONSIDERATION TO THE WORK OF OTHER TRADES, TO PREVENT INTERFERENCE.

12. THE CONTRACTOR SHALL CONNECT TO BUILDING UTILITIES AS SHOWN ON THE DRAWINGS.

13. ALL CUTTING OF WALLS, FLOORS, ROOFS, CEILINGS AND/OR PARTITIONS FOR THE PASSAGE OF CONDUITS, ETC., AND CLOSING UP OF SUPERFLUOUS OPENINGS AROUND THEM IN CONNECTION WITH THE WORK UNDER THIS CONTRACT, INCLUDING THE REMOVAL OF ALL DEBRIS CAUSED THEREBY, SHALL BE PERFORMED BY THE CONTRACTOR.

14. COORDINATE THE WORK TO MINIMIZE PENETRATION OF WATERPROOF CONSTRUCTION INCLUDING ROOFS, EXTERIOR WALLS AND INTERIOR WATERPROOF CONSTRUCTION. WHERE SUCH PENETRATIONS ARE NECESSARY, PROVIDE ALL NECESSARY CURBS, SEWER, SHIELDS, FLASHINGS, PATE BOXES, FITTINGS AND CAULKING TO MAKE THE PENETRATIONS ABSOLUTELY WATERTIGHT.

15. THE CONTRACTOR SHALL PROVIDE NECESSARY EXCAVATION AND BACKFILL FOR THE INSTALLATION OF MECHANICAL WORK.

16. ALL MATERIALS AND EQUIPMENT SHALL BE NEW, THE BEST OF THEIR RESPECTIVE KINDS AND SUITABLE FOR THE CONDITIONS AND DUTIES IMPOSED ON THEM.

17. WHERE A CONTRACTOR PROPOSES TO USE AN ITEM OF EQUIPMENT OTHER THAN THAT SPECIFIED OR DETAILED ON THE DRAWINGS, WHICH REQUIRES ANY REDESIGN OF THE STRUCTURE, PARTITIONS, FOUNDATIONS, PIPING, DUCTWORK, WIRING, OR ANY OTHER PART OF THE MECHANICAL, ELECTRICAL, OR ARCHITECTURAL LAYOUT, ALL SUCH REDESIGN, AND ALL NEW DRAWINGS PRODUCT SUBMITTALS, AND DETAILING REQUIRED THEREFORE SHALL, WITH THE APPROVAL OF THE ENGINEER AND GOVERNMENT, BE PREPARED BY THE CONTRACTOR AT HIS OWN EXPENSE.

18. ALL SYSTEMS SHALL BE TESTED FOR THE PROPER INSTALLATION AND OPERATION.

19. DURING CONSTRUCTION THE CONTRACTOR SHALL MAINTAIN AN ACCURATE, UP TO DATE SET OF DRAWINGS. THE CONTRACTOR SHALL PROVIDE THE GOVERNMENT, UPON COMPLETION AND ACCEPTANCE OF THE WORK, WITH A SET OF RED LINED AS-BUILT DRAWINGS, CLEARLY SHOWING THE PATH OF THE UNDERGROUND SYSTEMS, LOCATIONS OF EQUIPMENT, AND ANY DIMENSIONAL CHANGES.

20. UPON COMPLETION OF ALL WORK, THE CONTRACTOR SHALL GENERATE OPERATION AND MAINTENANCE (O&M) MANUALS FOR ALL EQUIPMENT AND SYSTEMS. MANUALS SHALL INCLUDE, BUT ARE NOT LIMITED TO THE FOLLOWING CONTENT:

   A. MANUALS SHALL INCLUDE FOR EACH PIECE OF EQUIPMENT:
      A.1. OPERATION MANUALS.
      A.2. MAINTENANCE MANUALS.
      A.3. LUBRICATION CHART & SCHEDULE
      A.4. PARTS LISTS.
      A.5. CUT SHEETS WITH DIMENSIONS.
      A.6. WIRING DIAGRAMS (WHERE APPLICABLE)
      A.7. INSTALLING CONTRACTOR'S CONTACT INFORMATION
      A.8. MANUFACTURER'S REPRESENTATIVE CONTACT INFORMATION

   B. VALVE CHART(S) AND PIPING DIAGRAM(S) LOCATING ALL TAGGED VALVES.

   C. QUANTITY AND FORMAT:

      C.1. PROVIDE THREE (3) SETS OF O&M MANUAL IN HEAVY DUTY 8½"x11 LOOSE LEAF RING BINDERS. BOUND COPY SHALL INCLUDE TABLE OF CONTENTS, DATA TABBED BY EQUIPMENT.

      C.2. PROVIDE ONE (1) COPY IN .PDF FORMAT ON COMPACT DISC (CD). ELECTRONIC .PDF O&M MANUAL SHALL BE SEARCHABLE, TABBED AND INCLUDE A TABLE OF CONTENTS WITH AUTOMATIC LINKS TO SPECIFIC PAGES/SECTIONS WITHIN THE FILE.

21. UPON COMPLETION OF ALL WORK, THE CONTRACTOR SHALL THOROUGHLY INSTRUCT THE OWNER'S REPRESENTATIVES IN THE PROPER OPERATION AND MAINTENANCE OF ALL MECHANICAL EQUIPMENT AND SYSTEMS. INSTRUCTION/TRAINING SHALL BE FOR NO LESS THAN ONE (1) FOUR (4) HOUR DAY AND INCLUDE WRITTEN COURSE DATA AND VIDEO RECORDING OF TRAINING.

SECTION 15101 - PRESSURE TESTS

1. ALL PIPING SHALL BE TESTED AND PROVEN TIGHT PRIOR TO COVERING WITH INSULATION OR CONCEALING.

2. TEST PRESSURES SHALL BE 1½ TIMES THE SYSTEM WORKING PRESSURE UNLESS OTHERWISE INDICATED. PRESSURE TESTS SHALL NOT EXCEED MAXIMUM ALLOWABLE WORKING PRESSURE OF PIPING AND/OR SYSTEM COMPONENTS. TEST HYDRONIC PIPING (HYDROSTATICALLY). TEST PRESSURE SHALL BE MAINTAINED FOR A MINIMUM OF EIGHT (8) HOURS, WITNESSED AND APPROVED BY PIPING SYSTEM MANUFACTURER'S REPRESENTATIVE AND GOVERNMENT REPRESENTATIVE AND INSTALLING CONTRACTOR. PROVIDE TEST REPORT DOCUMENT WITH GOVERNMENT REPRESENTATIVE AND CONTRACTOR'S SIGNATURES.

3. DIRECT BURIED PIPING SYSTEM CONDUIT SHALL BE PNEUMATICALLY PRESSURE TESTED TO 15 PSIG. AFTER COMPLETION AND BEFORE BACKFILL. TEST PRESSURE SHALL BE MAINTAINED FOR A MINIMUM OF FOUR (4) HOURS, WITNESSED AND APPROVED BY GOVERNMENT REPRESENTATIVE AND CONTRACTOR. PROVIDE TEST REPORT DOCUMENT WITH MANUFACTURER'S REPRESENTATIVE, GOVERNMENT REPRESENTATIVE AND CONTRACTOR'S SIGNATURES.

SECTION 15111 - PIPE, FITTINGS AND JOINTS

FIRE PROTECTION WATER:

1. PUMPED LINE 2½" AND LARGER (BELOW GRADE): ASTM A53, SCHEDULE 80 BLACK STEEL, 250 LB, OUTER ASPHALT COATING, STEEL BUTT WELDED FITTINGS WITH HEAT APPLIED TAPECOAT, ASTM A234.

PROPANE:

1. SCHEDULE 40, STEEL PIPE WITH WROUGHT-STEEL FITTINGS AND WELDED JOINTS, OR MECHANICAL COUPLINGS. COAT PIPE AND FITTINGS WITH PROTECTIVE COATING FOR STEEL PIPING.

SECTION 15112- VALVES

1. BALL VALVES: TWO PIECE WITH THREADED OR SOLDERED ENDS. 600 PSI CWP RATING, FORGED BRASS BODY, PTFE SEATS, CHROME-PLATED BRASS BALL, FULL PORT.

SECTION 15310 - PUMPS

1. PUMPS SHALL BE OF THE TYPE, SIZE AND CAPACITY AS SCHEDULED ON THE DRAWINGS.

2. SUBMERSIBLE SUMP PUMPS

   A. PUMPS SHALL BE SUBMERSIBLE TYPE WITH STAINLESS STEEL HOUSING, IMPELLER, SHAFT SLEEVE AND PUMP SHAFT, WITH SILICONE/CARBON SEALS. PROVIDE WITH INTEGRAL CHECK VALVE AND TUNGSTEN CARBIDE BEARINGS. INCLUDE MANUFACTURER'S FLOAT ASSEMBLY WITH HIGH LEVEL ALARM OUTPUT AND SUBMERSION TEMPERATURE SENSOR FOR HIGH WATER TEMPERATURE PUMP CUTOUT. PUMP SHALL OPERATE TO MAINTAIN PRESSURE SETPOINT IN WATER SUPPLY MAIN AT ENTRANCE TO CABINS.

SECTION 15320 - TANK ACCESSORIES

1. TANK WATER LEVEL GAUGE

   A. PROVIDE MECHANICAL CLOCK-TYPE GAUGE TO MEASURE WATER LEVEL IN UNDERGROUND TANK VIA POLYETHYLENE FLOAT. GAUGE HOUSING TO BE ABS WITH 1-1/2" MALE SCREW THREAD CONNECTION.

100% SUBMISSION

PMIS/PKG. NO. 209050

NATIONAL PARK SERVICE

Registered Professional Engineer (Fire Protection) CERTIFICATE NO. 50042 JEFFERY P. McBRIDE DATE SIGNED 12/15/2024 ARIZONA U.S.A.

FP FIRM

EBL ENGINEERS ESTABLISHED 1972
Mechanical - Electrical - Fire Protection
8005 Harford Road
Baltimore, Maryland 21234-5701
Tel: (410) 668-8000
E-mail: ebl@eblengineers.com

Mark	REVISION	Date	Issued by
-	-	-	-

MECHANICAL SPECIFICATIONS
TITLE OF SHEET

M2
SUB SHEET NO.

UNITED STATES
DEPARTMENT OF THE INTERIOR
NATIONAL PARK SERVICE - INTERIOR REGION 8
DESIGN AND PROJECT MANAGEMENT

INSTALL FIRE SUPPRESSION AT DELLENBAUGH CABIN ADMIN SITE
TITLE OF PROJECT

GRAND CANYON PARASHANT, NATIONAL MONUMENT, ARIZONA
LOCATION WITHIN PARK

INSTALL FIRE SUPPRESSION AT DELLENBAUGH CABIN ADMIN SITE
TITLE OF PROJECT

JPM
DESIGNED
EBL
DRAWN
JPM
CHECKED
DWG. NO.: XX XXXXXX
DATE: 08/02/2024
SHEET 6 OF 18

GENERAL NOTES:

1. ACCESS ROAD AND PARKING LOTS ARE COVERED IN 1.5" MINUS WASHED RIVER STONE. STONE SURFACE SHALL BE RESTORED AND GRADED UPON COMPLETION OF TRENCHING.

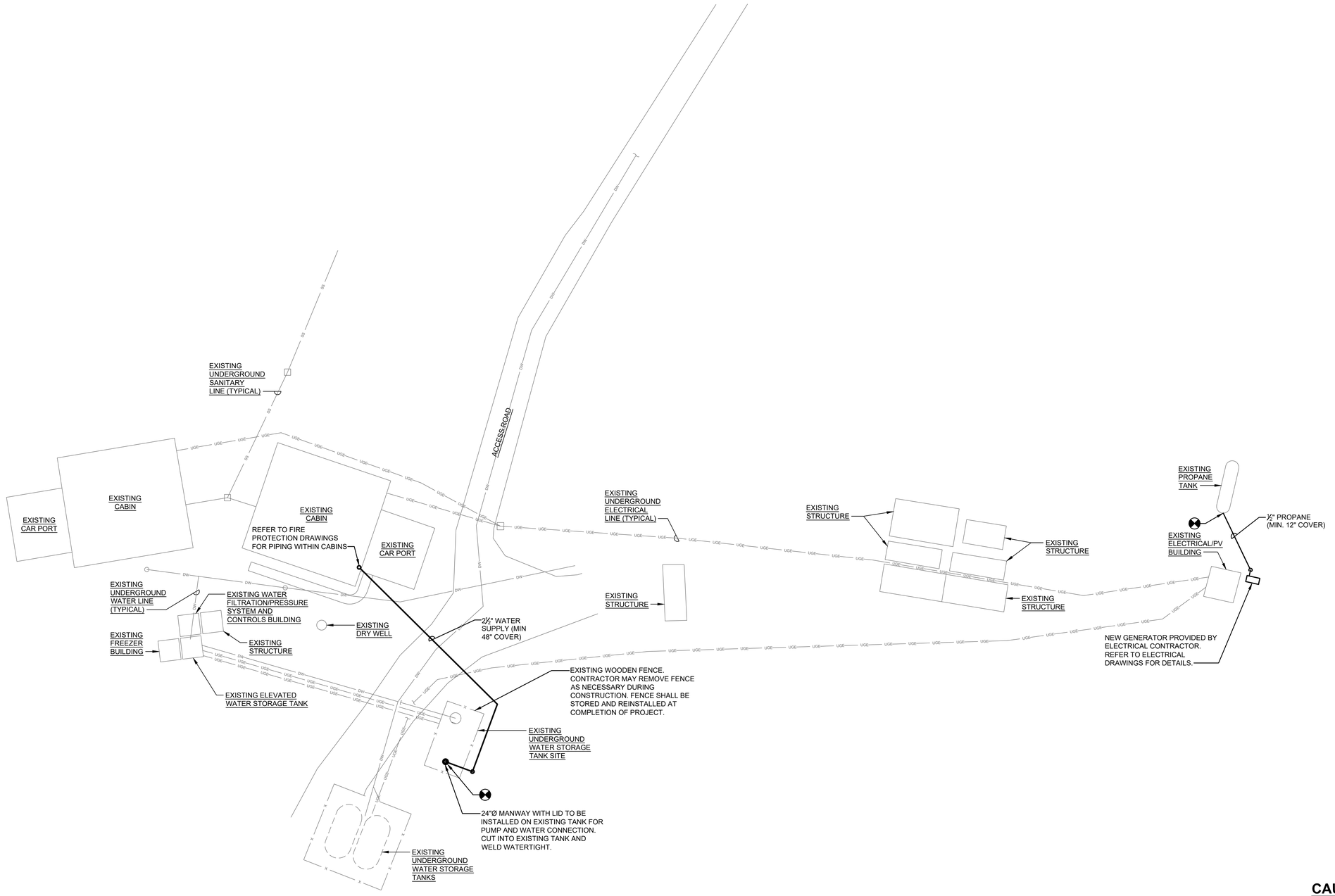

SITE PLAN - MECHANICAL

SCALE: APPROX. 1"=20'-0"

CAUTION:
IF THIS PLAN IS A REDUCTION, GRAPHIC SCALES MUST BE USED.

GRAPHIC SCALE

1"=20'-0"

0 10' 20' 40' 60'

100% SUBMISSION

PMIS/PKG. NO. 209050

NATIONAL PARK SERVICE

Registered Professional Engineer, Fire Protection — CERTIFICATE NO. 50042 JEFFERY P. McBRIDE — 12/13/2024 — STATE OF ARIZONA U.S.A.

FP FIRM

EBL ENGINEERS ESTABLISHED 1972
Mechanical - Electrical - Fire Protection
8005 Harford Road
Baltimore, Maryland 21234-5701
Tel: (410) 668-9000
E-mail: ebl@eblengineers.com

Mark	REVISION	Date	Issued by
-	-	-	-

SITE PLAN - MECHANICAL
TITLE OF SHEET

M3
SUB SHEET NO.

UNITED STATES
DEPARTMENT OF THE INTERIOR
NATIONAL PARK SERVICE - INTERIOR REGION 8
DESIGN AND PROJECT MANAGEMENT

INSTALL FIRE SUPPRESSION AT DELLENBAUGH CABIN ADMIN SITE
TITLE OF PROJECT

GRAND CANYON PARASHANT, NATIONAL MONUMENT, ARIZONA
LOCATION WITHIN PARK

INSTALL FIRE SUPPRESSION AT DELLENBAUGH CABIN ADMIN SITE
TITLE OF PROJECT

JPM DESIGNED
EBL DRAWN
JPM CHECKED
DWG. NO.: XX
XXXXXX
DATE: 08/02/2024
SHEET 7 OF 18

PROJECT DESCRIPTION - FIRE ALARM AND DETECTION SYSTEM:

PROJECT DESCRIPTION - FIRE ALARM AND DETECTION SYSTEM

THE GENERAL SCOPE OF THIS PROJECT IS TO PROVIDE A NEW FIRE ALARM AND DETECTION SYSTEM FOR ALL AREAS OF BOTH CABINS TO INCLUDE SLEEPING ROOMS, COMMON AREAS AND ENCLOSED ROOMS. THE FIRE ALARM AND DETECTION SYSTEM IS TO BE DESIGNED IN ACCORDANCE WITH THE CRITERIA AND DEVICE PLACEMENT AS INDICATED ON THE CONTRACT DRAWINGS.

THE NEW FIRE ALARM AND DETECTION COMPONENTS ARE TO BE PLACED IN A MANNER TO CONCEAL WIRING AND CONDUIT RUNS WITHIN EXISTING WALLS AND SURFACES. SEE DRAWINGS FOR DETAILS.

SPECIAL PROJECT CONSIDERATIONS:

PART 5 - SPECIAL CONSIDERATIONS

5.1 SITE

A. THE DELLENBAUGH ADMINISTRATIVE SITE IS AN ISOLATED, REMOTE LOCATION.

B. THERE IS NO CELLULAR, LANDLINE, CABLE, OR PUBLIC INTERNET SERVICE AT THE DELLENBAUGH ADMINISTRATIVE SITE.

C. THERE ARE NO MEDICAL FACILITIES WITHIN THE AREA, WITH THE CLOSEST MEDICAL FACILITIES BEING 90 MILES AWAY VIA THE ROAD SYSTEM.

D. THERE ARE NO VEHICLE MAINTENANCE SERVICES OR FUEL AVAILABLE AT THE SITE.

E. THERE ARE NO OTHER AMENITIES LOCATED IN THE AREA INCLUDING LODGING, GROCERY STORES, ENTERTAINMENT, RESTAURANTS, ETC.

F. ALL FOOD AND FUEL MUST BE TRANSPORTED TO THE SITE BY AND AT CONTRACTOR'S EXPENSE.

G. LODGING IS NOT AVAILABLE AT THE DELLENBAUGH ADMINISTRATIVE SITE.

1. CONTRACTOR MUST PROVIDE OWN LODGING (TRAILER, MOTORHOME, TENT)
2. LODGING AS DISPERSED RECREATION CAMPING IS AVAILABLE ON BUREAU OF LAND MANAGEMENT (BLM) LANDS NEAR THE JOB SITE.
   a. THERE ARE NO SERVICES SUCH AS WATER, ELECTRICITY, SEWER CONNECTION, TRASH PICKUP OR TABLES PROVIDED IN DISPERSED CAMPING AREAS.
   b. CAMPING PERMITTED ONLY IN PRE-EXISTING, DISTURBED AREAS.
   c. COR WILL IDENTIFY SUITABLE BLM DISPERSED CAMPING AREAS.
   d. FOLLOW LEAVE NO TRACE GUIDELINES.
   e. A PORTABLE TOILET, PROVIDED BY AND SERVICED BY, THE CONTRACTOR, IS REQUIRED AT THE CAMPING LOCATION UNLESS THE RECREATIONAL VEHICLE USED FOR LODGING HAS ADEQUATE WASTEWATER STORAGE (BLACK AND GRAY WATER)
   f. DRAINING OF GRAY WATER DIRECTLY TO THE GROUND IS PROHIBITED.

H. THERE IS NO SANITARY DUMP STATION AT THE DELLENBAUGH ADMINISTRATIVE SITE.

I. A PORTABLE TOILET FOR THE JOBSITE WILL BE PROVIDED BY THE CONTRACTOR. THE CONTRACTOR WILL MAINTAIN AND REMOVE THE PORTABLE TOILET FROM THE JOB SITE AT THE COMPLETION OF THE JOB.

J. COMMUTING TO THE JOB SITE FROM ST. GEORGE, UT EACH DAY IS NOT RECOMMENDED.

5.2 ROAD CONDITIONS

A. ACCESS TO THE WORK SITE IS BY UNIMPROVED, BUREAU OF LAND MANAGEMENT (BLM) AND MOHAVE COUNTY, AZ MAINTAINED ROADS.

B. THE CONDITION OF THE ROADS VARIES DEPENDING ON THE TIME OF YEAR AND CAN BE IN FAIR TO POOR CONDITION.

C. HIGH CLEARANCE, 4-WHEEL DRIVE VEHICLES ARE RECOMMENDED FOR TRAVEL TO AND FROM THE JOB SITE.

D. IT IS RECOMMENDED THAT VEHICLES BE EQUIPPED WITH LOAD RANGE E TIRES DESIGNED FOR OFF PAVEMENT USE.

E. IT IS RECOMMENDED THAT VEHICLES CARRY A SECOND SPARE TIRE, A TIRE PLUG KIT AND AN AIR COMPRESSOR AS FLAT TIRES ARE A COMMON OCCURRENCE WHILE TRAVELING IN THE AREA.

F. DUE TO THE SHEER SIZE OF THE REGION AND THE NUMBER OF ROADS, IT IS NOT POSSIBLE TO PROVIDE UPDATED TRAVEL CONDITIONS ON THE ARIZONA STRIP AFTER RAIN OR SNOW EVENT.

G. EXPECT ALL ROADS TO BE IMPASSIBLE AFTER WET WEATHER.

H. DURING THE SUMMER MONSOON SEASON (JUNE - SEPTEMBER), PLAN TRAVEL BEFORE 1 PM TO AVOID THUNDERSTORMS.

I. RANGE CATTLE AS WELL AS OTHER WILDLIFE MAY ALSO BE ENCOUNTERED ON THE ROADS AND CAUTION IS ADVISED.

5.3 COMMUNICATION

A. CELLULAR TELEPHONE COVERAGE IS LIMITED TO A FEW SPORADIC LOCATIONS.

B. CELLULAR TELEPHONE SIGNAL BOOSTER MAY IMPROVE CELLULAR SERVICE IN MARGINAL RECEPTION AREAS.

C. SATELLITE PHONE OR SATELLITE MESSENGER SUCH AS A GARMIN INREACH IS REQUIRED.

FIRE PROTECTION (FIRE ALARM) GENERAL DEMOLITION NOTES:

1. THE INSTALLER(S) SHALL FIELD VERIFY ALL EXISTING CONDITIONS PRIOR TO BEGINNING THE WORK. VERIFY EXISTING CONSTRUCTION AND SUPPORT CONDITIONS OF ASSEMBLIES WITHIN SCOPE OF WORK. NOTIFY THE NPS OF ANY DISCREPANCIES AND RECEIVE CLARIFICATIONS BEFORE PROCEEDING WITH THE WORK.
2. ANY UNSAFE CONDITIONS EXPOSED BY DEMOLITION ARE TO BE CONVEYED TO NATIONAL PARK SERVICE (NPS). PROVIDE TEMPORARY PROTECTIVE BARRIERS TO MEET OSHA STANDARDS.
3. REMOVAL OF "PARTICULAR ITEMS" IS TO INCLUDE ALL RELATED ITEMS. IT IS ALSO TO INCLUDE PATCHING OF ANY DAMAGE TO THE EXISTING CONDITION, AS A RESULT OF THE REMOVAL. CARE IS TO BE TAKEN NOT TO REMOVE ANY MORE THAN IS NECESSARY TO ACCOMMODATE NEW CONSTRUCTION AND THAT NO REMAINING ELEMENTS ARE DAMAGED DURING DEMOLITION AND CONSTRUCTION. ANY REMAINING SURFACES DISTURBED DURING DEMOLITION ARE TO BE RETURNED TO LIKE-NEW CONDITION WITH NEW MATERIALS TO MATCH SURROUNDING SURFACES.
4. REMOVE DEMOLISHED MATERIAL FROM SITE AND DISPOSE OF IN ACCORDANCE WITH COUNTY, STATE AND FEDERAL REGULATIONS APPLICABLE. (SEE SPECIAL PROJECT CONSIDERATIONS)
5. THE ENTIRE SITE SHALL BE CLEANED OF ALL EXISTING DEBRIS AND TRASH AS PART OF DEMOLITION WORK ON A DAILY BASIS. (SEE SPECIAL PROJECT CONSIDERATIONS)
6. THE INSTALLER(S) SHALL BE RESPONSIBLE FOR STORAGE OF ALL MATERIALS THE MATERIALS SHALL BE STORED IN SUCH A MANNER AS TO PREVENT STAINING, DAMAGE AND DETERIORATION.
7. COORDINATE THE EXTENT OF DEMOLITION WITH THE NEW WORK DEPICTED IN THE DRAWINGS.
8. THE INSTALLER(S) SHALL SCHEDULE AND COORDINATE ALL WORK TO MINIMIZE DISRUPTIONS TO ONGOING OPERATIONS AND DOWN-TIME TO EXISTING LIFE-SAFETY AND SECURITY SYSTEMS. ALL MEANS OF EGRESS SHALL CONFORM TO STATE, LOCAL AND OSHA REQUIREMENTS. CONTRACTOR IS RESPONSIBLE FOR REDIRECTING THE BUILDINGS PEDESTRIAN CIRCULATION TO THE EXISTING UNOBSTRUCTED EXITS DURING CONSTRUCTION.
9. OWNER HAS FIRST RIGHT OF REFUSAL FOR ANY MATERIAL REMOVED.
10. THE INSTALLER(S) IS RESPONSIBLE TO PATCH WALLS FLUSH AND REPAIR FINISHES TO MATCH EXISTING. WHERE WALL HAS EXISTING WALL COVERING, WALL COVERING IS TO BE CAREFULLY REMOVED WITH CLEAN CRISP VERTICAL CUTS AND SALVAGED FOR REINSTALLATION. THE FIRE ALARM/ELECTRICAL CONTRACTOR IS TO TEST A PORTION OF EACH TYPE OF WALL COVERING IN A LOCATION NOT EASILY VISIBLE TO VERIFY THE PROCESS WILL WORK. FOR ADDITIONAL CUTTING AND PATCHING REQUIREMENTS, REFER TO NPS SPEC SECTION 017329.

FIRE PROTECTION (FIRE ALARM) GENERAL NOTES:

1. THE FIRE ALARM/ELECTRICAL INSTALLER(S) SHALL SUBMIT COMPLETE LAYOUT SHOP DRAWINGS, CALCULATIONS, AND ANNOTATED MANUFACTURER'S DATA INFORMATION TO THE CONTRACTING OFFICER'S REPRESENTATIVE (COR) FOR REVIEW AND APPROVAL. APPROVALS SHALL BE OBTAINED PRIOR TO THE PURCHASE OR INSTALLATION OF ANY PART OF THE FIRE ALARM SYSTEM.
2. THE FIRE ALARM/ELECTRICAL INSTALLER(S) SHALL BE RESPONSIBLE FOR ALL APPLICABLE TRADE PERMITS, REQUESTS FOR INSPECTION, AND TESTING AS REQUIRED BY THE APPROVING AHJ.
3. PROVIDE ACCEPTANCE TESTING OF ENTIRE SYSTEM TO THE SATISFACTION OF THE CONTRACTING REPRESENTATIVE. TESTING OF ALL INDIVIDUAL SYSTEMS, DEVICES, WIRING, ETC. IS REQUIRED. PUNCHLIST ITEMS SHALL BE COMPLETED IN A TIMELY MANNER TO THE SATISFACTION OF THE CONTRACTING OFFICER'S REPRESENTATIVE (COR). THE CALENDAR WARRANTY PERIOD SHALL COMMENCE UPON THE CONTRACTING REPRESENTATIVE'S ACCEPTANCE OF ALL REFERENCED SYSTEMS AND COMPLETION OF ALL PUNCHLIST ITEMS.
4. A WARRANTY PERIOD OF ONE (1) YEAR SHALL BE PROVIDED, EFFECTIVE AFTER SYSTEM ACCEPTANCE TESTING. WARRANTY SHALL COVER ALL MATERIALS, EQUIPMENT, SOFTWARE, AND INSTALLATION PROVIDED BY THE CONTRACTOR OR SUBCONTRACTORS. A ONE (1) YEAR RENEWABLE CONTRACT FOR NFPA 72 COMPLIANT FIRE ALARM SYSTEM INSPECTION AND TESTING SERVICES SHALL ALSO BE PROVIDED.
5. THE FIRE ALARM/ELECTRICAL INSTALLER(S) SHALL COORDINATE THE EXACT LOCATION OF CEILING/WALL MOUNTED FIRE ALARM SYSTEM DEVICES INCLUDING THE ROUTING OF NEW CONDUIT IN EXISTING WALLS WITH EXISTING AND NEW LIGHT FIXTURES, CONDUITS, DUCTWORK, DIFFUSERS, PIPING AND ANY OTHER OBSTRUCTIONS.
6. ALL DEVICES SHALL BE MOUNTED AND SECURED TO THE BUILDING STRUCTURE. CONDUIT SHALL BE ROUTED PARALLEL OR PERPENDICULAR TO BUILDING LINES.
7. CONDUCTORS FOR THE FIRE ALARM SYSTEM SHALL BE INSTALLED IN ACCORDANCE WITH NFPA 70. THE CONDUCTORS SHALL NOT BE INSTALLED WITH CONDUCTORS OF LIGHTING OR POWER SYSTEMS. THE SUM OF THE CROSS-AREA OF INDIVIDUAL CONDUCTORS SHALL NOT EXCEED 40 PERCENT OF THE INTERIOR CROSS-SECTION OF THE CONDUIT. ALL FIRE ALARM SYSTEM WIRING SHALL BE RED COLORED METAL JACKETED CABLE OR SHALL BE INSTALLED IN MINIMUM 3/4-INCH CONDUIT.
8. ALL FIRE ALARM SYSTEM WIRING SHALL BE INSTALLED IN 3/4-INCH CONDUIT MINIMUM OR OTHERWISE PROTECTED WHERE REMOVED BY NFPA 70 AND NFPA 72. CONDUCTORS FOR THE FIRE ALARM SYSTEM DEVICES SHALL BE INSTALLED IN ACCORDANCE WITH NFPA 70. THE CONDUCTORS SHALL NOT BE INSTALLED IN CONDUIT, JUNCTION BOXES, OR OUTLET BOXES WITH CONDUCTORS OF LIGHTING OR POWER SYSTEMS. THE SUM OF THE CROSS-AREAS OF INDIVIDUAL CONDUCTORS SHALL NOT EXCEED 40 PERCENT OF THE INTERIOR CROSS-SECTIONAL AREA OF THE CONDUIT. ALL FIRE ALARM NON-POWER LIMITED CIRCUITS (WIRING) SHALL BE:
   A. LOW-VOLTAGE CIRCUITS: NO. 16 AWG SOLID (THWN), MINIMUM INITIATING AND SIGNALING LINE CIRCUITS.
   B. LOW-VOLTAGE CIRCUITS: NO. 14 AWG SOLID (THWN), MINIMUM NOTIFICATION APPLIANCE CIRCUITS.
   C. LINE-VOLTAGE CIRCUITS: NO. 12 AWG SOLID (THWN), MINIMUM.
9. EFFORT SHALL BE MADE TO REUSE ALL EXISTING FLOOR AND WALL PENETRATIONS TO THE EXTENT POSSIBLE. IF REQUIRED, ALL FLOOR PENETRATIONS SHALL BE CORE DRILLED AND SHALL BE COORDINATED WITH EXISTING STRUCTURAL SYSTEMS.
10. THE INSTALLER(S) SHALL REPAIR OR REPLACE ANY NEW OR EXISTING ITEM, WALL, FLOOR, CEILING, CEILING TILE, ETC. DAMAGED IN CONJUNCTION WITH ALL WORK. REPAIR OR REPLACEMENT SHALL BE AT THE INSTALLER'S COST. THE INSTALLER(S) SHALL PROVIDE ALL CUTTING, PATCHING AND REFINISHING OF EXISTING PLASTER WALLS, PLASTER CEILINGS OR FLOORS AS REQUIRED IN THE CONTRACT SPECIFICATIONS AND DRAWINGS. THE INSTALLER(S) SHALL REPLACE ALL CEILING TILES DAMAGED IN CONJUNCTION WITH ALL WORK. AT LEAST 10 PERCENT OF THE EXISTING CEILING TILES HANDLED MAY NEED TO BE REPLACED DUE TO DAMAGE FROM ALL NEW WORK.
11. SPACING OF SMOKE SENSORS AND HEAT SENSORS SHALL BE IN ACCORDANCE WITH NFPA 72 AND AS INDICATED ON THE CONTRACT DOCUMENTS. THE FIRE ALARM/ELECTRICAL INSTALLER(S) SHALL CONFIRM AND IF NECESSARY, REDUCE SPACING AS APPLICABLE, BASED ON CEILING HEIGHT, CONSTRUCTION, AND/OR AIR CHANGE RATES, AT NO ADDITIONAL COST TO THE GOVERNMENT.
12. FIRE ALARM MANUAL PULL STATIONS AT DOOR OPENINGS SHALL BE WITHIN 5'-0" HORIZONTALLY OF THE DOOR OPENING.
13. RELAY MODULES SHALL BE INSTALLED WITHIN 3 FEET OF THE DEVICE BEING CONTROLLED.
14. T-TAPPING OF NOTIFICATION APPLIANCE CIRCUITS AND SIGNALING LINE CIRCUITS SHALL NOT BE PERMITTED.
15. INITIATING DEVICE CIRCUITS SHALL BE CLASS A OR MATCH EXISTING.
16. SIGNALING LINE CIRCUITS SHALL BE CLASS A OR MATCH EXISTING.
17. NOTIFICATION APPLIANCE CIRCUITS SHALL BE CLASS A OR MATCH EXISTING.
18. THE USE OF WIRE NUTS AND CRIMP CONNECTORS IS PROHIBITED.
19. EXISTING CONDITIONS MATERIALS AND/OR DIMENSIONS WHERE SHOWN OR DESCRIBED ARE FOR GENERAL INFORMATION ONLY. THE CONTRACTOR IS RESPONSIBLE FOR COMPLETE REMOVAL OF THE EXISTING WORK TO THE EXTENT INDICATED OR REQUIRED WHETHER OR NOT THE EXISTING MATERIAL DESIGNATIONS, CONFIGURATION AND/OR DIMENSIONS ARE INCORRECTLY SHOWN.
20. ALL MATERIALS TO BE INSTALLED IN STRICT ACCORDANCE WITH THE MANUFACTURERS AND FABRICATORS SPECIFICATIONS, RECOMMENDATIONS AND PRINTED WARNINGS FOR THE HANDLING AND INSTALLATION OF ALL THE PRE-MANUFACTURED PRODUCTS, THE CONTRACT DOCUMENTS AND DIRECTIONS OF THE ENGINEER.

FIRE PROTECTION (FIRE ALARM) GENERAL NOTES (CONT.):

21. THE INSTALLER(S) SHALL MAINTAIN A NEAT AND DEBRIS FREE SITE. UPON COMPLETION OF ANY CONSTRUCTION OPERATION (INCLUDING END OF SHIFT OR END OF TEMPORARY ACTIVITY), THE WORK AREA SHALL BE POLICED AND DEBRIS SHALL BE REMOVED AT THE END OF EACH WORK DAY. THE TOTAL SITE SHALL BE BROUGHT TO A BROOM-CLEANED CONDITION.
22. THE INSTALLER(S) SHALL PROVIDE SUFFICIENTLY STRONG AND SAFE RAMPS, LADDERS, SCAFFOLDS, AND TEMPORARY HOISTS AND GUARD RAILS REQUIRED TO ACCOMPLISH WORK.
23. EXCEPT AS OTHERWISE SPECIFICALLY NOTED, ALL ELEMENTS OF THE WORK ARE INTENDED TO BE A COMPLETED PRODUCT. WHETHER SPECIFICALLY INCLUDED IN THE CONSTRUCTION DOCUMENTS OR NOT. ALL INCIDENTAL COMPLEMENTS NECESSARY FOR PROPER CONSTRUCTION (ADHESIVES, SEALANTS, BOND BREAK MATERIAL, ETC.) SHALL BE INCLUDED AND PROPERLY INSTALLED IN THE WORK.
24. THE TERM "PROVIDE" MEANS TO FURNISH AND INSTALL, COMPLETE AND READY FOR THE INTENDED USE.
25. ALL DUST GENERATION SHALL BE AVOIDED. IF DUST GENERATION CANNOT BE AVOIDED, THE DUST AND DEBRIS SHALL BE CLEANED UP IMMEDIATELY AND REMOVED FROM THE BUILDING AS WORK PROGRESSES. AT MINIMUM, THE FIRE ALARM/ELECTRICAL INSTALLER(S) SHALL CLEAN AND VACUUM WORK AREAS AT THE END OF EACH WORK SHIFT.
26. THE FIRE ALARM/ELECTRICAL INSTALLER(S) SHALL PROVIDE STANDBY BATTERY CALCULATIONS FOR THE FIRE ALARM SYSTEM.
27. FIRE ALARM SYSTEM SYMBOLS SHALL COMPLY WITH THE 2018 EDITION OF NFPA 170.
28. THE FIRE ALARM/ELECTRICAL INSTALLER SHALL UTILIZE UNI-STRUT TO MINIMIZE INSTALLATION OF NUMEROUS HOLES IN MOUNTING OF FIRE ALARM RELATED PANELS AND CABINETS IN/ON MASONRY WALLS.
29. THE FIRE ALARM/ELECTRICAL INSTALLER SHALL UTILIZE RAW-PLUG AND STAINLESS STEEL SCREWS IN GYPSUM WALL BOARD AND PLASTER CEILINGS AND WALLS.

CODES AND STANDARDS REFERENCES:

ALL REFERENCES TO IBC SHALL MEAN THE MOST RECENT EDITION AT THE TIME OF AWARD.
ALL REFERENCES TO NFPA 17A SHALL MEAN THE MOST RECENT EDITION AT THE TIME OF AWARD.
ALL REFERENCES TO NFPA 25 SHALL MEAN THE MOST RECENT EDITION AT THE TIME OF AWARD.
ALL REFERENCES TO NFPA 70 SHALL MEAN THE MOST RECENT EDITION AT THE TIME OF AWARD.
ALL REFERENCES TO NFPA 72 SHALL MEAN THE MOST RECENT EDITION AT THE TIME OF AWARD.
ALL REFERENCES TO NFPA 90A SHALL MEAN THE MOST RECENT EDITION AT THE TIME OF AWARD.
ALL REFERENCES TO NFPA 96 SHALL MEAN THE MOST RECENT EDITION AT THE TIME OF AWARD.
ALL REFERENCES TO NFPA 101 SHALL MEAN THE MOST RECENT EDITION AT THE TIME OF AWARD.
ALL REFERENCES TO NFPA 170 SHALL MEAN THE MOST RECENT EDITION AT THE TIME OF AWARD.
ALL REFERENCES TO NFPA 241 SHALL MEAN THE MOST RECENT EDITION AT THE TIME OF AWARD.
ALL REFERENCES TO NFPA 720 SHALL MEAN THE MOST RECENT EDITION AT THE TIME OF AWARD.

100% SUBMISSION

PMIS/PKG. NO. 209050

NATIONAL PARK SERVICE

REGISTERED Professional Engineer, Fire Protection — CERTIFICATE NO. 50042 — JEFFERY P. McBRIDE — DATE ISSUED 12/11/2024 — ARIZONA U.S.A.

FP FIRM

EBL ENGINEERS — ESTABLISHED 1972
Mechanical - Electrical - Fire Protection
8005 Harford Road
Baltimore, Maryland 21234-5701
Tel: (410) 668-6000
E-mail: ebl@eblengineers.com

Mark	REVISION	Date	Issued by
-	-	-	-

FIRE ALARM GENERAL NOTES
TITLE OF SHEET

FA1
SUB SHEET NO.

UNITED STATES
DEPARTMENT OF THE INTERIOR
NATIONAL PARK SERVICE - INTERIOR REGION 8
DESIGN AND PROJECT MANAGEMENT

INSTALL FIRE SUPPRESSION AT DELLENBAUGH CABIN ADMIN SITE
TITLE OF PROJECT
GRAND CANYON PARASHANT, NATIONAL MONUMENT, ARIZONA
LOCATION WITHIN PARK
INSTALL FIRE SUPPRESSION AT DELLENBAUGH CABIN ADMIN SITE
TITLE OF PROJECT

DESIGNED: JPM
DRAWN: EBL
CHECKED: JPM
DWG. NO.: XX XXXXXX
DATE: 08/02/2024
SHEET 8 OF 18

FIRE ALARM MATRIX (SEE FIRE ALARM MATRIX GENERAL NOTES)

	DEVICE ACTIVATION					
SYSTEM RESPONSE	ACTIVATION OF ANY FIRE ALARM MANUAL PULL STATION	ACTIVATION OF ANY AREA SMOKE OR CO SENSOR	ACTIVATION OF ANY WATERFLOW ALARM DEVICE	ACTIVATION OF ANY VALVE SUPERVISORY TAMPER SWITCH	POWER SUPPLY PROBLEMS (PRIMARY, TROUBLE AND SECONDARY)	OPEN WIRE OR GROUND IN ANY SUPERVISED CIRCUIT
ACTIVATE BUILDING COMBINATION HORN/STROBE, HORNS, AND STROBES	●	●	●			
ACTIVATE ELECTRIC SPRINKLER COMBINATION HORN/STROBE			●			
ACTIVATE SYSTEM SUPERVISORY				●		
ACTIVATE SYSTEM TROUBLE					●	●
ACTIVATE SYSTEM ALARM	●	●	●			
ANNUNCIATE AT THE FACU AND REMOTE LCD ANNUNCIATOR PANEL	●	●	●	●	●	●
RECORD EVENTS IN THE SYSTEM MEMORY	●	●	●	●	●	●

FIRE ALARM RISER DIAGRAM GENERAL NOTES:

1. ALL WIRING AND CONDUIT SIZES AND QUANTITIES SHALL BE IN ACCORDANCE WITH THE FIRE ALARM SYSTEM MANUFACTURER'S RECOMMENDATIONS, NFPA 70 AND NFPA 72.
2. FIRE ALARM RISER DIAGRAM IS DIAGRAMMATIC. RUNS OF CONDUIT AND MANNER OF CONNECTION SHALL BE DETERMINED BY THE FIRE ALARM/ELECTRICAL INSTALLER(S) AND SHALL BE IN ACCORDANCE WITH THE FIRE ALARM SYSTEM MANUFACTURER'S RECOMMENDATIONS, NFPA 70, NFPA 72 AND THE CONTRACT SPECIFICATIONS.
3. ALL FIRE ALARM WIRING SHALL BE INSTALLED IN 3/4" CONDUIT (MINIMUM).
4. SEE FLOOR PLAN DRAWINGS FOR THE FIRE ALARM SYSTEM INITIATING DEVICE AND NOTIFICATION APPLIANCE LOCATIONS AND QUANTITIES.
5. THE FIRE ALARM INSTALLER SHALL PROVIDE STANDBY BATTERY CALCULATIONS FOR THE FIRE ALARM SYSTEM.

FIRE ALARM RISER DIAGRAM DRAWING NOTES:

1. CONNECT TO CLASS A SIGNALING LINE CIRCUIT. (DIAGRAMMATIC ONLY; NOT ALL DEVICES SHOWN)
2. CONNECT TO CLASS A NOTIFICATION APPLIANCE CIRCUIT. (DIAGRAMMATIC ONLY; NOT ALL DEVICES SHOWN)
3. FIRE ALARM DOCUMENT STORAGE CABINET AND DRAWING STORAGE CABINET.
4. CONNECT TO 120V ELECTRIC PANEL LOCATED IN THE BASEMENT. PROVIDE TRANSIENT VOLTAGE SURGE SUPPRESSOR (120V) ON 120V POWER SUPPLY.
5. CONNECT TO LCD ANNUNCIATOR WIRING AND CONDUIT.

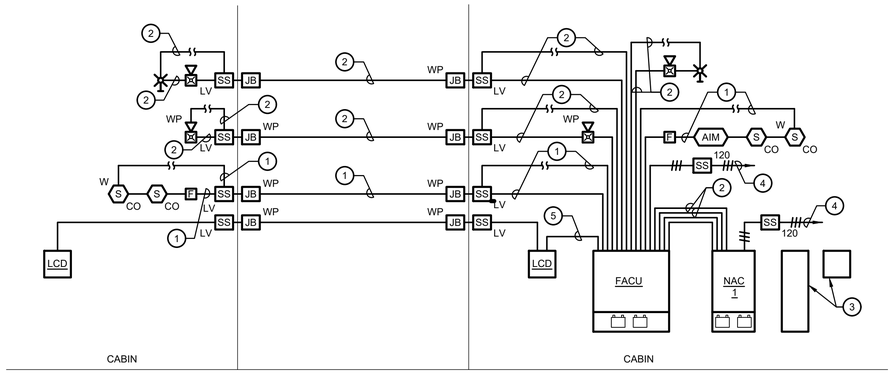

FIRE ALARM RISER DIAGRAM

NO SCALE

ABBREVIATIONS

A	AMPERE
ACT	ACOUSTICAL CEILING TILE
AFF	ABOVE FINISHED FLOOR
AHJ	AUTHORITY HAVING JURISDICTION
AHU	AIR HANDLING UNIT
C	CONDUIT
CFM	CUBIC FEET PER MINUTE
CL	CENTER LINE
CMU	CONCRETE MASONRY UNIT
CX	CONNECT TO EXISTING
DACT	DIGITAL ALARM COMMUNICATOR TRANSMITTER
DWG	DRAWING
EMT	ELECTRICAL METALLIC TUBING
EOL	END OF LINE
ETR	EXISTING TO REMAIN
EX	EXISTING
FA	FIRE ALARM
FACU	FIRE ALARM CONTROL UNIT
FAGAP	FIRE ALARM GRAPHIC ANNUNCIATOR PANEL
FAPB	FIRE ALARM POWER BOOSTER PANEL
FDC	FIRE DEPARTMENT CONNECTION
FF	FINISHED FLOOR
FL	FLOOR
FM	FACTORY MUTUAL
GRD	GROUND
GWB	GYPSUM WALL BOARD
HVAC	HEATING, VENTILATION, AND AIR CONDITIONING
IDC	INITIATING DEVICE CIRCUIT
MAX	MAXIMUM
MIN	MINIMUM
N	NEUTRAL
NAC	NOTIFICATION APPLIANCE CIRCUIT
NFPA	NATIONAL FIRE PROTECTION ASSOCIATION
NO #	NUMBER
NPS	NATIONAL PARK SERVICE
OS&Y	OUTSIDE SCREW & YOKE
ϕ	PHASE
POD	POINT OF DISCONNECT
RTU	ROOFTOP AIR HANDLING UNIT
RX	REMOVE EXISTING
SF	SQUARE FEET
SLC	SIGNALING LINE CIRCUIT
STD	STANDARD
TBD	TO BE DETERMINED
TYP	TYPICAL
UG	UNDERGROUND
UL	UNDERWRITERS LABORATORIES
UNO	UNLESS NOTED OTHERWISE
V	VOLTS
W	WIRE
WP	WEATHERPROOF
W/	WITH

FIRE ALARM LEGEND

(DEMOLITION)

SYMBOL	DESCRIPTION
FACU	RX FIRE ALARM CONTROL UNIT
	RX FIRE ALARM COMBINATION AUDIO/VISUAL (HORN/STROBE) DEVICE
	RX ADDRESSABLE FIRE ALARM MANUAL STATION
C RI	RX FIRE ALARM VISUAL (STROBE) DEVICE
S P	RX SMOKE SENSOR SUBSCRIPT 'P' DENOTES PHOTOELECTRIC TYPE

(EXISTING)

SYMBOL	DESCRIPTION
F	ETR FIRE ALARM MANUAL STATION
	ETR FIRE ALARM COMBINATION (SPEAKER/STROBE) DEVICE
	ETR FIRE ALARM VISUAL (STROBE) DEVICE
S P	ETR SMOKE SENSOR

(NEW WORK)

NOTE: ALL MOUNTING HEIGHTS SHOWN ARE FROM CENTER OF DEVICE TO AFF, UNO

SYMBOL	DESCRIPTION
FACU	FIRE ALARM CONTROL UNIT
LCD	REMOTE ANNUNCIATOR KEYPAD
NAC n	NOTIFICATION CIRCUIT POWER BOOSTER, EXTENDER PANEL n = UNIT NUMBER
F	ADDRESSABLE FIRE ALARM MANUAL STATION MOUNTING HEIGHT 4'-0" UNLESS NOTED OTHERWISE
C 15,30, 75,110	FIRE ALARM VISUAL (STROBE) DEVICE MOUNTING HEIGHT 80" UNLESS NOTED OTHERWISE SUPERSCRIPT 'C' DENOTES CEILING TYPE SUBSCRIPT '15, 30, 75, 110' DENOTES CANDELA RATING
C 15,30, 75,110,135	FIRE ALARM COMBINATION AUDIO/VISUAL (HORN/STROBE) DEVICE MOUNTING HEIGHT 80" UNLESS NOTED OTHERWISE SUPERSCRIPT 'C' DENOTES CEILING MOUNTED SUBSCRIPT '15, 30, 75, 110, 135' DENOTES CANDELA RATING
WP 185	ELECTRIC SPRINKLER ALARM COMBINATION HORN/STROBE DEVICE MOUNTING HEIGHT 7'-6" UNLESS NOTED OTHERWISE SUPERSCRIPT 'WP' DENOTES WEATHERPROOF DEVICE SUBSCRIPT '185' DENOTES CANDELA RATING
S CO	COMBINATION SMOKE AND CARBON MONOXIDE SENSOR WITH SOUNDER BASE
W S CO	COMBINATION SMOKE AND CARBON MONOXIDE SENSOR WITH SOUNDER BASE - WALL MOUNTED
AIM 2	JUNCTION BOX WITH MONITOR MODULE SUBSCRIPT '2' DEMOTES DUAL INPUT MONITOR MODULE
AOM	JUNCTION BOX WITH CONTROL MODULE
	HOMERUN TO PANEL - NUMBER OF ARROWS INDICATE NUMBER OF CIRCUITS AND NUMBER OF CROSSLINES INDICATES NUMBER OF #12 CONDUCTORS - WHERE NO CROSSLINES APPEAR 2#12 PLUS 1#12 GROUND CONDUCTORS ARE IMPLIED
	FIRE ALARM/SPRINKLER ZONE BOUNDARY
#	DRAWING NOTE NUMBER
JB	JUNCTION BOX SUPERSCRIPT 'WP' DENOTES WEATHERPROOF
SS	TRANSIENT VOLTAGE SURGE SUPPRESSOR
WF	WATERFLOW SWITCH ALARM DEVICE
VS	VALVE SUPERVISORY TAMPER SWITCH

100% SUBMISSION

PMIS/PKG. NO. 209050

NATIONAL PARK SERVICE

Registered Professional Engineer, Fire Protection — CERTIFICATE NO. 50042 JEFFERY P. McBRIDE — DATE SIGNED 12/17/2024 — ARIZONA U.S.A.

FP FIRM

EBL ENGINEERS ESTABLISHED 1972
Mechanical ◦ Electrical ◦ Fire Protection
8005 Harford Road
Baltimore, Maryland 21234-5701
Tel: (410) 668-8900
E-mail: ebl@eblengineers.com

Mark	REVISION	Date	Issued by
-	-	-	-

FIRE ALARM LEGEND, ABBREVIATIONS, RISER DIAGRAM, AND MATRIX
TITLE OF SHEET

FA2
SUB SHEET NO.

UNITED STATES
DEPARTMENT OF THE INTERIOR
NATIONAL PARK SERVICE - INTERIOR REGION 8
DESIGN AND PROJECT MANAGEMENT

INSTALL FIRE SUPPRESSION AT DELLENBAUGH CABIN ADMIN SITE
TITLE OF PROJECT
GRAND CANYON PARASHANT, NATIONAL MONUMENT, ARIZONA
LOCATION WITHIN PARK
INSTALL FIRE SUPPRESSION AT DELLENBAUGH CABIN ADMIN SITE
TITLE OF PROJECT

JPM
DESIGNED
EBL
DRAWN
JPM
CHECKED
DWG. NO: XX XXXXXX
DATE: 08/02/2024
SHEET 9 OF 18

FIRE ALARM SPECIFICATIONS

SECTION 284621 - FIRE ALARM AND DETECTION SYSTEM

1. THIS SECTION INCLUDES, BUT IS NOT LIMITED TO: [ANALOG][DIGITAL]/ADDRESSABLE FIRE ALARM SYSTEMS, INCLUDING CONTROL PANELS, POWER BOOSTER PANELS, MANUAL STATIONS, DETECTORS, NOTIFICATION APPLIANCES, SIGNAL EQUIPMENT, CONTROLS, DEVICES, REMOTE ANNUNCIATOR PANEL, DOCUMENT STORAGE CABINET AND DRAWING STORAGE BOX.
2. THE AUTHORITY HAVING JURISDICTION (AHJ) IS THE NPS REGIONAL FIRE PROTECTION ENGINEER.
3. THE FIRE ALARM AND DETECTION SYSTEM SHALL CONSIST OF ALL NECESSARY HARDWARE EQUIPMENT AND SOFTWARE PROGRAMMING TO PERFORM THE FOLLOWING FUNCTIONS:
   A. FIRE ALARM AND DETECTION SYSTEM OPERATIONS.
4. PROVIDE AND INSTALL ALL FIRE ALARM DEVICES AND APPLIANCES IN ACCORDANCE WITH NFPA 72 REQUIREMENTS.
5. ALL EQUIPMENT, DEVICES, AND CONNECTED WIRING WHICH FORM THE SPECIFIED SYSTEM TOGETHER WITH INSTALLATION AND MAINTENANCE SERVICE SHALL BE IN COMPLIANCE WITH THE REQUIREMENTS ESTABLISHED BY UNDERWRITER'S LABORATORIES, INC.
6. SHOP DRAWING DESIGN SHALL BE BY A NICET LEVEL III OR IV FIRE ALARM TECHNICIAN OR A REGISTERED FIRE PROTECTION ENGINEER. INSTALLATION SHALL BE ACCOMPLISHED BY AN ELECTRICAL CONTRACTOR WITH A MINIMUM OF FIVE YEARS EXPERIENCE IN THE INSTALLATION OF FIRE ALARM SYSTEMS. THE SUPERVISION OF INSTALLATION AND TESTING SHALL BE PROVIDED BY A CERTIFIED NICET LEVEL III OR IV TECHNICIAN WHO HAS BEEN TRAINED BY THE MANUFACTURER AND CERTIFIED ON THE INSTALLATION, MAINTENANCE, NETWORKING AND PROGRAMMING OF THE PRODUCT BEING INSTALLED, OR A REGISTERED FIRE PROTECTION ENGINEER.
7. INSTALL ALL CONDUCTORS IN RIGID METAL CONDUIT OR ELECTRICAL METALLIC TUBING, WITH A MINIMUM DIAMETER OF 19 MM. RUN CONDUIT OR TUBING CONCEALED UNLESS SPECIFICALLY SHOWN OTHERWISE ON THE DRAWINGS. ALL WIRING FOR THE FIRE ALARM SYSTEM MUST BE INSTALLED IN SEPARATE CONDUIT. NO OTHER BUILDING WIRING IS PERMITTED IN CONDUIT THAT CONTAINS FIRE ALARM WIRING. ALL CONDUIT MUST BE PROPERLY SUPPORTED FROM THE STRUCTURE, AND MUST BE MARKED OR BANDED (RED) EVERY 10 FEET. ALL JUNCTION OR PULL BOXES MUST BE PAINTED RED AND MARKED "FA". ALL CONDUIT SHALL BE PAINTED.
8. SUBMIT SHOP DRAWINGS (NOT SMALLER THAN 22 IN BY 34 IN) AND, AS A MINIMUM, SHALL INCLUDE THE FOLLOWING:
   A. POINT-TO-POINT WIRING DIAGRAMS SHOWING THE POINTS OF CONNECTION AND TERMINALS USED FOR ALL ELECTRICAL FIELD CONNECTIONS IN THE SYSTEM, INCLUDING ALL INTERCONNECTIONS BETWEEN THE EQUIPMENT OR SYSTEMS WHICH ARE SUPERVISED OR CONTROLLED BY THE SYSTEM.
   B. INCLUDE ANNOTATED CATALOG DATA SHOWING MANUFACTURER'S NAME, MODEL, VOLTAGE, AND CATALOG NUMBERS FOR ALL EQUIPMENT AND COMPONENTS.
   C. INCLUDE BATTERY CALCULATIONS FOR BOTH THE ALARM AND SUPERVISORY POWER REQUIREMENTS. AMPERE-HOUR REQUIREMENTS FOR EACH SYSTEM COMPONENT SHALL BE SUBMITTED WITH THE CALCULATIONS.
      1. CAPACITY: PROVIDE THE BATTERIES WITH SUFFICIENT CAPACITY TO OPERATE ALL SIGNALING LINE CIRCUITS, INITIATING DEVICE CIRCUITS, AND NOTIFICATION APPLIANCE CIRCUITS IN NORMAL OR SUPERVISORY (NON-ALARM) MODE FOR A PERIOD OF 24 HOURS. FOLLOWING THIS PERIOD OF OPERATION ON BATTERY POWER, THE BATTERIES SHALL HAVE SUFFICIENT CAPACITY TO OPERATE ALL COMPONENTS OF THE SYSTEM IN ALARM MODE FOR A PERIOD OF FIFTEEN (15) MINUTES. BATTERY CAPACITY CALCULATIONS SHALL BE BASED ON EQUIPMENT CURRENT DRAW AT A MINIMUM OPERATING VOLTAGE OF 24 VDC. PROVIDE BATTERIES SIZED AT 150% OF FIRE ALARM MANUFACTURER'S CALCULATIONS.
   D. PROVIDE A COLOR CODE SCHEDULE FOR THE WIRING AND FLOOR PLANS SHOWING THE LOCATION OF ALL DEVICES AND EQUIPMENT.
   E. THE SIGNATURE AND SEAL OF A REGISTERED PROFESSIONAL FIRE PROTECTION ENGINEER, REGISTERED PROFESSIONAL ENGINEER WITH A MINIMUM OF TWO YEARS FIRE PROTECTION DESIGN EXPERIENCE, OR A NICET LEVEL III OR IV TECHNICIAN.
9. FIRE ALARM PROGRAMMING CHANGES ARE PERMITTED ONLY WHEN CONFIRMED ACCEPTANCE TESTING IS SCHEDULED WITH THE AHJ. A FIRE ALARM PROGRAM CHANGE MUST BE ACCEPTANCE TESTED WITHIN 24 HOURS OF THE CHANGE.
10. ALL EQUIPMENT, DEVICES, AND CONNECTED WIRING WHICH FORM THE SPECIFIED SYSTEM TOGETHER WITH INSTALLATION AND MAINTENANCE SERVICE SHALL BE IN COMPLIANCE WITH THE REQUIREMENTS ESTABLISHED BY UNDERWRITER'S LABORATORIES, INC.
11. CERTIFICATION & INSURANCE
   A. THE CONTRACTOR SHALL PROVIDE THE SERVICES AND EQUIPMENT OF AN ALARM SERVICE COMPANY LISTED BY UNDERWRITERS LABORATORIES, INC., IN ITS DIRECTORY AS BEING CAPABLE OF FURNISHING THE SIGNALING SYSTEMS SPECIFIED HEREIN AND WHO IS AUTHORIZED TO, AND SHALL, ISSUE A CERTIFICATE TO THE EQUIPMENT DESCRIBED HEREIN AS ITS REPRESENTATION THAT SUCH EQUIPMENT AND ALL CONNECTED WIRING AND INSTALLATION AND MAINTENANCE SERVICE ARE IN COMPLIANCE WITH THE REQUIREMENTS ESTABLISHED BY UNDERWRITERS LABORATORIES, INC.
   B. THE CONTRACTOR SHALL INCLUDE IN THE BID PRICE, A ONE-YEAR MAINTENANCE AND INSPECTION AGREEMENT COMPLYING WITH ALL U.L. AND NFPA REQUIREMENTS AND SHALL BE EXECUTED. THIS PRICE SHALL BE CALLED OUT SO THAT THE OWNER CAN ANTICIPATE "FUTURE" COSTS. THE CONTRACTOR SHALL GUARANTEE THAT THIS PRICE SHALL NOT INCREASE MORE THAN 10% A YEAR FOR A MINIMUM OF YEARS AND SHALL GIVE THE OWNER AN ANNUAL RENEWAL WITH 30 DAYS WRITTEN NOTICE.
   C. SPECIFIED EQUIPMENT SHALL BE FURNISHED BY A SUPPLIER WHO CAN PROVIDE EVIDENCE OF CARRYING INSURANCE COVERAGE WHICH SHALL INCLUDE COMPREHENSIVE GENERAL LIABILITY, PRODUCTS LIABILITY, PERSONAL INJURY BLANKET CONTRACTUAL, PREMISES OPERATIONS AND BROAD FORM PROPERTY DAMAGE WITH LIMITS NO LESS THAN $1,000,000 (ONE MILLION) DOLLARS, BODILY INJURY AND PROPERTY DAMAGE COMBINED. A CERTIFICATE OF INSURANCE SHALL BE PRODUCED AS EVIDENCE OF COVERAGE.
12. SUBJECT TO COMPLIANCE WITH REQUIREMENTS, PROVIDE PRODUCTS BY THE FOLLOWING:
   A. GAMEWELL - FCI BY HONEYWELL
   B. EDWARDS SYSTEM TECHNOLOGY, INC.
   C. SIEMENS
   D. FIRELITE ALARMS, INC.
   E. SILENT KNIGHT: A GE-HONEYWELL COMPANY
   F. POTTER ALARMS, INC

FIRE ALARM SPECIFICATIONS (CONTINUED):

13. FIRE ALARM CONTROL PANEL
   A. CABINET: LOCKABLE STEEL ENCLOSURE. ARRANGE INTERIOR COMPONENTS SO OPERATIONS REQUIRED FOR TESTING OR FOR NORMAL MAINTENANCE OF THE SYSTEM ARE PERFORMED FROM THE FRONT OF THE ENCLOSURE. IF MORE THAN ONE UNIT IS REQUIRED TO FORM A COMPLETE CONTROL PANEL, FABRICATE WITH MATCHING MODULAR UNIT ENCLOSURE TO ACCOMMODATE COMPONENTS AND TO ALLOW AMPLE GUTTER SPACE FOR FIELD WIRING AND INTERCONNECTING PANELS.
      1. IDENTIFY EACH ENCLOSURE WITH AN ENGRAVED, BLACK, LAMINATED, PHENOLIC-RESIN NAMEPLATE WITH LETTERING NOT LESS THAN 1 INCH (25 MM) HIGH. IDENTIFY INDIVIDUAL COMPONENTS AND MODULES WITHIN CABINETS WITH PERMANENT LABELS.
      2. MOUNTING: RECESSED ON NEW GYPSUM WALL ASSEMBLY. SURFACE ON CMU.
   B. ALARM AND SUPERVISORY SYSTEMS: SEPARATE AND INDEPENDENT IN THE FACP. ALARM-INITIATING ZONE BOARDS CONSIST OF PLUG-IN CARDS. CONSTRUCTION REQUIRING REMOVAL OF FIELD WIRING FOR MODULE REPLACEMENT IS UNACCEPTABLE.
   C. CONTROL MODULES: INCLUDE TYPES AND CAPACITIES REQUIRED TO PERFORM ALL FUNCTIONS OF FIRE ALARM SYSTEMS.
   D. INDICATIONS: LOCAL, VISIBLE, AND AUDIBLE SIGNALS ANNOUNCE ALARM, SUPERVISORY, AND TROUBLE CONDITIONS. EACH TYPE OF AUDIBLE ALARM HAS A DIFFERENT SOUND.
   E. RESETTING CONTROLS: PREVENT THE RESETTING OF ALARM, SUPERVISORY, OR TROUBLE SIGNALS WHILE THE ALARM OR TROUBLE CONDITION STILL EXISTS.
   F. ALPHANUMERIC DISPLAY AND SYSTEM CONTROLS: ARRANGED FOR INTERFACE BETWEEN HUMAN OPERATOR AT THE FACP AND ADDRESSABLE SYSTEM COMPONENTS, INCLUDING ANNUNCIATION, SUPERVISION AND CONTROL.
      1. DISPLAY: A MINIMUM OF 80 CHARACTERS; ALARM, SUPERVISORY, AND COMPONENT STATUS MESSAGES; AND INDICATE CONTROL COMMANDS TO BE ENTERED INTO THE SYSTEM FOR CONTROL OF SMOKE DETECTOR SENSITIVITY AND OTHER PARAMETERS.
      2. KEYPAD: ARRANGED TO PERMIT ENTRY AND EXECUTION OF PROGRAMMING, DISPLAY, AND CONTROL COMMANDS.
   G. INSTRUCTIONS: PRINTED OR TYPEWRITTEN INSTRUCTION CARD MOUNTED BEHIND A PLASTIC OR GLASS COVER IN A STAINLESS-STEEL OR ALUMINUM FRAME. INCLUDE INTERPRETATION AND DESCRIBE APPROPRIATE RESPONSE FOR DISPLAYS AND SIGNALS. BRIEFLY DESCRIBE THE FUNCTIONAL OPERATION OF THE SYSTEM UNDER NORMAL, ALARM, AND TROUBLE CONDITIONS.
14. POWER BOOSTER PANEL
   A. THE FIRE ALARM/ELECTRICAL CONTRACTOR SHALL PROVIDE ALL NECESSARY EQUIPMENT, MATERIAL, DESIGN, HARDWARE, SOFTWARE, AND LABOR TO MODIFY THE EXISTING FIRE ALARM POWER PANEL TO INCORPORATE NEW ADDITIONAL NOTIFICATION APPLIANCE DEVICES, AS REQUIRED BY THE CONTRACT DOCUMENTS. PROVIDE STANDBY BATTERY CALCULATIONS ON THE REVISED FIRE ALARM SYSTEM AND REPLACE EXISTING BATTERIES OF SUFFICIENT SIZES INDICATED BY THE STANDBY CALCULATIONS.
   B. THE FIRE ALARM/ELECTRICAL CONTRACTOR SHALL COORDINATE FINAL CONNECTIONS TO THE EXISTING FIRE ALARM POWER BOOSTER PANEL WITH THE OWNER. THE ELECTRICAL/FIRE ALARM CONTRACTOR SHALL MAKE FINAL CONNECTIONS INTO THE EXISTING FIRE ALARM POWER BOOSTER PANEL.
   C. CABINET: LOCKABLE STEEL ENCLOSURE. ARRANGE INTERIOR COMPONENTS SO OPERATIONS REQUIRED FOR TESTING OR FOR NORMAL MAINTENANCE OF THE SYSTEM ARE PERFORMED FROM THE FRONT OF THE ENCLOSURE. IF MORE THAN ONE UNIT IS REQUIRED TO FORM A COMPLETE CONTROL PANEL, FABRICATE WITH MATCHING MODULAR UNIT ENCLOSURE TO ACCOMMODATE COMPONENTS AND TO ALLOW AMPLE GUTTER SPACE FOR FIELD WIRING AND INTERCONNECTING PANELS. THE POWER BOOSTER PANEL SHALL BE MONITORED BY THE FIRE ALARM SYSTEM FOR TROUBLE CONDITIONS.
      1. IDENTIFY EACH ENCLOSURE WITH AN ENGRAVED, BLACK, LAMINATED, PHENOLIC-RESIN NAMEPLATE WITH LETTERING NOT LESS THAN 1 INCH (25 MM) HIGH. IDENTIFY INDIVIDUAL COMPONENTS AND MODULES WITHIN CABINETS WITH PERMANENT LABELS.
      2. MOUNTING: SURFACE.
   C. POWER BOOSTER PANELS SHALL INCLUDE, BUT NOT BE LIMITED TO, POWER SUPPLIES, BATTERIES AND CHARGER.
15. MANUAL PULL STATIONS
   A. DESCRIPTION: SEMI-RECESSED, DOUBLE-ACTION TYPE, FABRICATED OF HIGH IMPACT RED LEXAN OR METAL, AND FINISHED IN RED WITH MOLDED, RAISED-LETTER OPERATING INSTRUCTIONS OF CONTRASTING COLOR.
   B. STATION WILL MECHANICALLY LATCH UPON OPERATION AND REMAIN SO UNTIL MANUALLY RESET BY OPENING WITH A KEY COMMON WITH THE CONTROL UNITS.
   C. STATIONS REQUIRING THE BREAKING OF A GLASS PANEL OR CONCEALED ROD ARE NOT ACCEPTABLE.
16. PHOTOELECTRIC SMOKE DETECTORS WITH BASE: INCLUDE THE FOLLOWING FEATURES AND CHARACTERISTICS:
   A. AN INFRARED DETECTOR LIGHT WITH MATCHING SILICON CELL RECEIVER AND ACTUATED BY THE PRESENCE OF VISIBLE PRODUCTS OF COMBUSTION.

FIRE ALARM SPECIFICATIONS (CONTINUED):

17. NOTIFICATION APPLIANCES
   A. DESCRIPTION: EQUIP FOR MOUNTING AS INDICATED AND HAVE SCREW TERMINALS FOR SYSTEM CONNECTIONS.
      1. COMBINATION DEVICES: FACTORY-INTEGRATED AUDIBLE AND VISIBLE DEVICES IN A SINGLE-MOUNTING ASSEMBLY.
   B. HORNS: ELECTRIC-VIBRATING-POLARIZED TYPE, 24-V DC; WITH PROVISION FOR HOUSING THE OPERATING MECHANISM BEHIND A GRILLE. HORNS SHALL PRODUCE A TEMPORAL CODE 3 PATTERN WITH A SOUND-PRESSURE LEVEL OF 90 DB, MEASURED 10 FEET (3 M) FROM THE HORN.
      1. MOUNTING: RECESSED.
      2. RATED OUTPUT: FIELD-SELECTABLE SETTINGS RANGING FROM 1/4 TO 2W.
      3. MOUNTING: CEILING.
   C. VISIBLE ALARM DEVICES: XENON STROBE LIGHTS LISTED UNDER UL 1971 WITH CLEAR POLYCARBONATE LENS. MOUNT LENS ON AN ALUMINUM FACEPLATE. THE WORD "FIRE" IS ENGRAVED IN MINIMUM 1-INCH- (25-MM-) HIGH LETTERS ON THE LENS.
      1. RATED LIGHT OUTPUT: AS INDICATED ON THE CONTRACT DRAWINGS.
      2. STROBE LEADS: FACTORY CONNECTED TO SCREW TERMINALS.
      3. MOUNTING: RECESSED.
      2. MOUNTING: CEILING.
   D. ELECTRIC SPRINKLER ALARM COMBINATION HORN/STROBE: HORN: ELECTRIC-VIBRATING-POLARIZED TYPE, 24V DC; WITH PROVISION FOR HOUSING THE OPERATING MECHANISM BEHIND A GRILLE. HORNS SHALL PRODUCE A TEMPORAL CODE 3 PATTERN WITH A SOUND-PRESSURE LEVEL OF 90 DB, MEASURED 10 FEET (3 M) FROM THE HORN. VISIBLE ALARM DEVICES: XENON STROBE LIGHT LISTED UNDER UL 1971 WITH CLEAR POLYCARBONATE LENS. MOUNT LENS ON AN ALUMINUM FACEPLATE. THE WORD "FIRE" IS ENGRAVED IN MINIMUM 1-INCH (25 MM) HIGH LETTERS ON THE LENS. COMBINATION HORN/STROBE SHALL BE WEATHERPROOF.
      1. RECESSED-MOUNTED IN WEATHERPROOF SQUARE COVER BOX AND BACKBOX AND RED FINISH.
      2. RATED LIGHT OUTPUT: AS INDICATED ON THE CONTRACT DRAWINGS.
      3. STROBE LEADS: FACTORY CONNECTED TO SCREW TERMINALS.
18. ADDRESSABLE INTERFACE DEVICE
   A. DESCRIPTION: MICROELECTRONIC MONITOR MODULE LISTED FOR USE IN PROVIDING A SYSTEM ADDRESS FOR LISTED ALARM-INITIATING DEVICES FOR WIRED APPLICATIONS WITH NORMALLY OPEN CONTACTS.
   B. INTEGRAL RELAY: CAPABLE OF PROVIDING A DIRECT SIGNAL TO THE ELEVATOR CONTROLLER TO INITIATE ELEVATOR RECALL OR TO A CIRCUIT-BREAKER SHUNT TRIP FOR POWER SHUTDOWN TO ELEVATOR OR A HVAC UNIT STARTER FOR FAN SHUT DOWN.
   C. CIRCUIT ISOLATION: THE SYSTEM SHALL PROVIDE MEANS FOR ISOLATING WIRE-TO-WIRE SHORT CIRCUITS ON AN SLC LOOP.
   D. INTEGRAL RELAY: CAPABLE OF PROVIDING A DIRECT SIGNAL TO THE EXISTING HARD-WIRED FACP.
19. REMOTE ANNUNCIATOR (LCD)
   A. DESCRIPTION: DUPLICATE ANNUNCIATOR FUNCTIONS OF THE FACP FOR ALARM, SUPERVISORY, AND TROUBLE INDICATIONS. ALSO DUPLICATE MANUAL SWITCHING FUNCTIONS OF THE FACP, INCLUDING ACKNOWLEDGING, SILENCING, RESET, AND TEST.
      1. MOUNTING: RECESSED CABINET, NEMA 250, CLASS 1.
   B. LCD ALPHANUMERIC DISPLAY ANNUNCIATOR:
      1. THE ALPHANUMERIC DISPLAY ANNUNCIATOR SHALL BE A SUPERVISED BACK-LIT LCD DISPLAY CONTAINING A MINIMUM OF EIGHTY (80) CHARACTERS FOR ALARM ANNUNCIATION IN CLEAR ENGLISH TEXT.
      2. THE LCD ANNUNCIATOR SHALL DISPLAY ALL ALARM, SUPERVISORY AND TROUBLE CONDITIONS IN THE SYSTEM.
      3. LCD DISPLAY ANNUNCIATORS SHALL MIMIC THE MAIN CONTROL PANEL 80 CHARACTER DISPLAY AND SHALL NOT REQUIRE SPECIAL PROGRAMMING.
      4. THE LCD ANNUNCIATOR SHALL HAVE SWITCHES WHICH MAY BE PROGRAMMED FOR SYSTEM CONTROL, SUCH AS GLOBAL ACKNOWLEDGE AND GLOBAL SIGNAL SILENCE.

FIRE ALARM SPECIFICATIONS (CONTINUED):

   C. THE ANNUNCIATOR SHALL HAVE PROVISION FOR THE FOLLOWING FEATURES:
      1. LCD ALPHANUMERIC DISPLAY.
      2. KEY ACTUATED AUXILIARY SWITCHES SHALL BE KEYED THE SAME AS THE ANNUNCIATOR PANEL.
      3. THE ANNUNCIATOR SHALL HAVE ONE AUTO-OFF SWITCH AND LABELING FOR THE EMERGENCY MANUAL SHUT-OFF OF THE BUILDING HVAC SYSTEMS. THE SWITCH SHALL CONTROL THE EQUIPMENT AS INDICATED ON THE CONTRACT DRAWINGS.
      4. SELF-RESTORING SILENCE CIRCUIT EMPLOYING PIEZOELECTRIC DEVICE.
20. BATTERY: CELLED ELECTROLYTE, SEALED, MAINTENANCE FREE TYPE. PROVIDE SUFFICIENT CAPACITY TO OPERATE THE COMPLETE ALARM SYSTEM IN NORMAL OR SUPERVISORY (NON-ALARM) MODE FOR A PERIOD OF 24 HOURS. FOLLOWING THIS PERIOD OF OPERATION ON BATTERY POWER, THE BATTERY SHALL HAVE SUFFICIENT CAPACITY TO OPERATE ALL COMPONENTS OF THE SYSTEM, INCLUDING ALL ALARM INDICATING DEVICES IN ALARM OR SUPERVISORY MODE FOR A PERIOD OF 15 MINUTES.
21. SURGE SUPPRESSION
   A. PROVIDE LINE VOLTAGE AND LOW VOLTAGE SURGE SUPPRESSION DEVICES TO SUPPRESS ALL VOLTAGE TRANSIENTS WHICH MIGHT DAMAGE THE CONTROL PANEL COMPONENTS. MOUNT SUPPRESSORS IN SEPARATE ENCLOSURE(S) ADJACENT TO CONTROL PANEL UNLESS SUPPRESSORS ARE SPECIFICALLY U.L. LISTED OR FM APPROVED FOR MOUNTING INSIDE THE CONTROL PANEL PROVIDED AND APPROVED FOR SUCH USE BY THE CONTROL PANEL MANUFACTURER.
      1. LINE VOLTAGE AC PROTECTION
         a. MAXIMUM CONTINUOUS OPERATING VOLTAGE: 150 VOLTS.
         b. PEAK SURGE CURRENT: 20 KA PER MODE; 60 KA TOTAL.
         c. FUSING: INTERNAL COMPONENT LEVEL THERMAL FUSING
         d. SPD CIRCUITRY SHALL INCLUDE ONLY SOLID-STATE CLAMPING COMPONENTS CONSISTING OF A MULTI-STAGE HYBRID DESIGN. MODEL SHALL BE BI-DIRECTIONAL AND ENCAPSULATED IN A UL LISTED/RECOGNIZED HIGH DIELECTRIC COMPOUND.
         e. DISCRETE AND DEDICATED PROTECTION COMPONENTS MUST BE PROVIDED FOR EACH MODE OF PROTECTION. (L-N, NORMAL MODE) (L-G, N-G COMMON MODE).
         f. SINE WAVE TRACKING MUST BE PROVIDED FOR EACH MODE OF PROTECTION. PRODUCTS UTILIZING BASIC EMI/RFI FILTER PERFORMANCE (DB INSERTION LOSS RATING) WILL NOT BE CONSIDERED.
         g. LET-THROUGH VOLTAGES OF PRODUCT TESTED WITH THE IEEE C62.41.1 & C62.41.2-2002; 100 KHZ RING WAVE AND COMBINATION WAVE MUST BE EQUAL TO OR BETTER THAN THE FOLLOWING:
            (1) CAT A, 30 OHM 100 KHZ RING WAVE, 2 KV/67 AMP @ 270 DEGREE PHASE ANGLE

L-N	25 VOLTS
L-G	50 VOLTS
N-G	32 VOLTS

            (2) CAT B, 2 OHM IMPULSE (COMBINATION) WAVE, 6KV/3K AMP @ 90 DEGREE PHASE ANGLE

L-N	316 VOLTS
L-G	429 VOLTS
N-G	498 VOLTS

         h. WARRANTY: 25 YEARS UNLIMITED FREE REPLACEMENT
      2. LOW VOLTAGE SURGE SUPPRESSOR
         a. PROVIDE FOR ALL CIRCUITS WHICH LEAVE THE BUILDING SHELL AND AS SHOWN ON THE CONTRACT DRAWINGS. WHEN CIRCUITS INTERCONNECT TWO OR MORE BUILDINGS, PROVIDE AN ARRESTOR AT THE CIRCUIT ENTRANCE TO EACH BUILDING. SUPPRESSOR SHALL BE U.L. 97B LISTED WITH A MAXIMUM 30 VOLT CLAMPING LEVEL AND A MAXIMUM RESPONSE TIME OF 5 NANOSECONDS. SUPPRESSOR SHALL HAVE MULTI-STAGE CONSTRUCTION AND BOTH DIFFERENTIAL/COMMON MODE PROTECTION.
22. DOCUMENT STORAGE CABINET AND DRAWING STORAGE BOX
   A. PROVIDE A FIRE ALARM DOCUMENT STORAGE CABINET AND DRAWING STORAGE BOX NEXT TO THE MAIN FIRE ALARM CONTROL PANEL. THE FIRE ALARM DOCUMENT STORAGE CABINET SHALL CONTAIN A SET OF O&M MANUALS AND THE DRAWING STORAGE BOX SHALL CONTAIN A SET OF AS-BUILT FIRE ALARM DRAWINGS. SPACE AGE/ACER BOX OR AN APPROVED EQUAL.
23. THE CONTRACTOR SHALL COMPLETE AND SUBMIT A RECORD OF COMPLETION AND MAINTENANCE RECORD, INSPECTION, AND TESTING TO THE ENGINEER IN ACCORDANCE WITH NFPA 72, PARAGRAPH 1-6.2 AND 7-5.2.
24. MANUFACTURER'S FIELD SERVICES: PROVIDE SERVICES OF A FACTORY AUTHORIZED SERVICE REPRESENTATIVE TO SUPERVISE THE FIELD ASSEMBLY AND CONNECTION OF COMPONENTS AND THE PRETESTING, TESTING, AND ADJUSTMENTS OF THE SYSTEM.
25. PRELIMINARY TESTING: CONDUCT PRELIMINARY TESTS TO ENSURE THAT ALL DEVICES AND CIRCUITS ARE FUNCTIONING PROPERLY. AFTER PRELIMINARY TESTING IS COMPLETE, PROVIDE A LETTER CERTIFYING THAT THE INSTALLATION IS COMPLETE AND FULLY OPERABLE. THE LETTER SHALL STATE THAT EACH INITIATING AND INDICATING DEVICE WAS TESTED IN PLACE AND FUNCTIONED PROPERLY. THE LETTER SHALL INCLUDE THE NAMES AND TITLES OF THE WITNESSES TO THE PRELIMINARY TESTS. THE CONTRACTOR AND AN AUTHORIZED REPRESENTATIVE FROM EACH SUPPLIER OF EQUIPMENT SHALL BE IN ATTENDANCE AT THE PRELIMINARY TESTING TO MAKE NECESSARY ADJUSTMENTS. A MEMBER OF THE GSA FIRE ALARM SHOP MUST BE INVITED TO THE PRELIMINARY TEST.
26. FINAL TESTING: NOTIFY THE CONTRACTING OFFICER IN WRITING WHEN THE SYSTEM IS READY FOR FINAL ACCEPTANCE TESTING. SUBMIT THE REQUEST FOR TESTING AT LEAST 15 CALENDAR DAYS PRIOR TO TEST DATE. THE FINAL TESTS SHALL BE WITNESSED BY A REPRESENTATIVE OF THE GSA SAFETY ENVIRONMENT AND FIRE PROTECTION BRANCH AND THE GSA FIRE ALARM SHOP. AT THIS TIME, ANY AND ALL REQUIRED TESTS SHALL BE REPEATED AT THE DISCRETION OF THE GOVERNMENT.

100% SUBMISSION

PMIS/PKG. NO. 209050

NATIONAL PARK SERVICE

Registered Professional Engineer, Fire Protection — CERTIFICATE NO. 50042 — JEFFERY P. McBRIDE — Date Signed 12/13/2023 — ARIZONA U.S.A.

FP FIRM

EBL ENGINEERS — ESTABLISHED 1972

Mechanical - Electrical - Fire Protection

8005 Harford Road
Baltimore, Maryland 21234-5701
Tel. (410) 882-6000
E-mail: info@eblengineers.com

Mark	REVISION	Date	Issued by
-	-	-	-

FA3

SUB SHEET NO.

FIRE ALARM SPECIFICATIONS

TITLE OF SHEET

UNITED STATES
DEPARTMENT OF THE INTERIOR
NATIONAL PARK SERVICE - INTERIOR REGION 8
DESIGN AND PROJECT MANAGEMENT

INSTALL FIRE SUPPRESSION AT DELLENBAUGH CABIN ADMIN SITE
TITLE OF PROJECT

GRAND CANYON PARASHANT, NATIONAL MONUMENT, ARIZONA
LOCATION WITHIN PARK

INSTALL FIRE SUPPRESSION AT DELLENBAUGH CABIN ADMIN SITE
TITLE OF PROJECT

JPM — DESIGNED
EBL — DRAWN
JPM — CHECKED
DWG. NO.: XX XXXXXX
DATE: 08/02/2024
SHEET 10 OF 18

FIRE ALARM SPECIFICATIONS (CONT.):

29. SUBMISSION OF EMPLOYEE'S RESUMES: THE CONTRACTOR SHALL SUBMIT TO THE COR THE RESUMES INCLUDING CERTIFICATIONS, PROOF OF TRAINING, ETC. OF ALL PERSONNEL WITH THEIR PROPOSAL, HOWEVER, AFTER CONTRACT AWARD THIS DATA FOR NEW HIRES SHALL BE SUBMITTED NO LATER THAN 7 DAYS PRIOR TO SUCH PERSONNEL BEGINNING TO PERFORM WORK ON THIS CONTRACT WORK. THE COR MAY DENY PERMISSION FOR ANY PROPOSED PERSONNEL TO WORK ON THIS CONTRACT, IF QUALIFICATIONS INDICATE A MATERIAL DEGRADATION FROM THE SKILL LEVELS INDICATED IN THE CONTRACTOR'S PROPOSAL FOR THE CONTRACT, OR IF SKILLS OR RELIABILITY CONCERNS ARE SUCH THAT THE COR BELIEVES THE PROTECTION OF THE BUILDING EQUIPMENT, SYSTEMS, SECURITY, OCCUPANTS, ETC. MAY BE JEOPARDIZED.

30. TESTING AND INSPECTIONS SHALL INCLUDE THE FOLLOWING MINIMUM CRITERIA:

    A. FIRE ALARM SYSTEM

        1. TESTING AND COMMISSIONING IN ACCORDANCE WITH NFPA 72.
        2. ALL NEW EQUIPMENT SHALL BE 100% FULLY TESTED.
        3. CONFIDENCE (RE-ACCEPTANCE) TESTING TO INCLUDE 10% OF THE BUILDING FIELD DEVICES.
        4. TEST EACH FIRE ALARM INITIATING AND INDICATING DEVICE AND CIRCUIT FOR PROPER
        5. TEST THE SYSTEM FOR ALL SPECIFIED FUNCTIONS IN ACCORDANCE WITH THE CONTRACT SPECIFICATIONS, AND THE APPROVED SPRINKLER AND FIRE ALARM SUBMITTALS.
        6. DETERMINE THAT THE SYSTEM IS OPERABLE UNDER TROUBLE CONDITIONS.
        7. TEST THE ADEQUACY OF THE NOTIFICATION APPLIANCES (VISIBLE AND AUDIBLE CHARACTERISTICS).
        8. PROGRAM CHANGES TO THE BUILDING FIRE ALARM CONTROL PANEL WILL REQUIRE RE-ACCEPTANCE TESTING WITHIN 24 HOURS OF THE CHANGE.
        9. AS APPLICABLE, PERFORM A BATTERY TEST FOR ALL NEW CONTROL PANELS AND EXTENDER PANELS.

31. CONTRACTOR SHALL PROVIDE A WRITTEN REPORT TO THE AHJ FOR REVIEW AND APPROVAL. THE REPORT SHALL BE SUBMITTED WITHIN 72 HOURS. THE REPORT SHALL HAVE THE FOLLOWING SECTIONS:

    A. PERSONS PRESENT DURING INSPECTION/TESTING: LIST PERSONS, COMPANY NAME AND PHONE NUMBER.

    B. GENERAL INFORMATION: THIS SECTION DESCRIBES THE PROJECT SCOPE OF WORK AND WHAT WAS TESTED. IT WILL ALSO DESCRIBE THE FIRE PROTECTION SYSTEMS. IN THE DESCRIPTION OF THE FIRE ALARM IDENTIFY THE EQUIPMENT MANUFACTURER, PANEL TYPE, WHETHER THE SYSTEM IS HARDWIRED OR ANALOG/INTELLIGENT TYPE, STYLE/CLASS OF WIRING, TYPE OF WIRE/CABLE/FIBER USED, TYPE OF NOTIFICATION APPLIANCES, LOCATION OF INITIATING DEVICES, WHAT DEVICES AREA ALARM/PREALARM/SUPERVISORY, EVACUATION ZONE (FULL BUILDING OR PHASED EVACUATION), SURVIVABILITY FEATURES (LEVELS, RISER TYPES, PORTION OF FLOOR SERVED BY CIRCUITS).

    C. GENERAL D&O COMMENTS: IN THIS SECTION STATE ANY CONTRACT DEFICIENCIES. IF THE ITEM HAS BEEN CORRECTED STRIKE THROUGH THE EXISTING COMMENT. INCLUDE WHO WITNESSED THE COMPLETION OF THE DEFICIENCY AND INCLUDE DATE.

    D. NEW RECOMMENDATIONS: IN THIS SECTION STATE ANY RECOMMENDATIONS THAT ARE REQUIRED BUT WERE NOT IN THE ORIGINAL CONTRACT.

    E. ITEMS STILL REQUIRING TESTING: INCLUDE ANY SYSTEMS/PART OF SYSTEMS THAT HAVE NOT YET BEEN TESTED.

    F. TROUBLE LOG: NOTE WHETHER THERE ARE ANY FIRE ALARM TROUBLES AT THE END OF THE ACCEPTANCE TESTING.

    G. ACCEPTANCE: ADD A STATEMENT IF THE SYSTEMS (LIST SYSTEMS) SHOULD BE ACCEPTED (IF THIS IS THE FINAL ACCEPTANCE TEST) AND IF AN OCCUPANCY CERTIFICATE SHOULD BE ISSUED. PLEASE NOTE THAT THE AHJ WILL REVIEW THE REPORT BEFORE ISSUING THE CERTIFICATE OF OCCUPANCY. IF THIS WORK IS FOR TEMPORARY USE OF THE FIRE ALARM SYSTEM, THEN THE FPE CONTRACTOR SHALL STATE THAT IT RECOMMENDED FOR USE & CAN PROTECT THE BUILDING OCCUPANTS AND THAT IT IS MONITORING THE FIRE PROTECTION SYSTEMS. THE FPE CONTRACTOR'S RECOMMENDATION IS NOT TO BE SENT TO THE INSTALLATION CONTRACTOR.

32. SUBMIT AS-BUILT DRAWINGS TO THE CONTRACTING OFFICER UPON COMPLETION OF THE PROJECT. THESE DRAWINGS SHALL INDICATE CHANGES FROM THE ORIGINAL LAYOUT, MARKED IN RED.

33. AS-BUILT DRAWINGS IN CONFORMANCE WITH THE PROVISIONS OF NFPA 72 SHALL BE PROVIDED PRIOR TO THE ACCEPTANCE TEST. DRAWINGS PROVIDED SHALL BE REPRODUCIBLE MYLAR WITH A MINIMUM SCALE OF 1/8-INCH EQUAL TO 1 FOOT. THREE SETS OF MAINTENANCE MANUALS AND A COMPLETE ACCEPTANCE TEST REPORT SHALL BE PROVIDED WITHIN 4 WEEKS OF COMPLETION OF ALL TESTING.

34. THE CONTRACTOR SHALL PROVIDE THE SERVICES OF A FACTORY-AUTHORIZED EMPLOYED REPRESENTATIVE TO DEMONSTRATE THE SYSTEM AND TRAIN THE OWNER'S MAINTENANCE DEPARTMENT PERSONNEL. THE FIRE ALARM SYSTEM SHALL BE COMPLETELY INSTALLED AND OPERATIONAL PRIOR TO THE SCHEDULING OF ANY TRAINING. THE TRAINING SHALL BE AS SPECIFIED BELOW:

    A. TRAIN OWNER'S MAINTENANCE PERSONNEL IN THE PROCEDURES AND SCHEDULES INVOLVED IN OPERATING, TROUBLESHOOTING, SERVICING, AND PREVENTIVE MAINTENANCE OF THE SYSTEM. PROVIDE A MINIMUM OF 4 HOURS TRAINING.

    B. SCHEDULE TRAINING WITH THE OWNER AT LEAST SEVEN DAYS IN ADVANCE.

100% SUBMISSION

PMIS/PKG. NO. 209050

NATIONAL PARK SERVICE

Registered Professional Engineer, Fire Protection — CERTIFICATE NO. 50042 — JEFFERY P. McBRIDE — DATE SIGNED 12/15/2023 — ARIZONA U.S.A.

FP FIRM

EBL ENGINEERS
ESTABLISHED 1972
Mechanical - Electrical - Fire Protection
8005 Harford Road
Baltimore, Maryland 21234-5701
Tel: (410) 668-6000
E-mail: ebl@eblengineers.com

Mark	REVISION	Date	Issued by
-	-	-	-

FIRE ALARM SPECIFICATIONS
TITLE OF SHEET

FA4
SUB SHEET NO.

UNITED STATES
DEPARTMENT OF THE INTERIOR
NATIONAL PARK SERVICE - INTERIOR REGION 8
DESIGN AND PROJECT MANAGEMENT

INSTALL FIRE SUPPRESSION AT DELLENBAUGH CABIN ADMIN SITE
TITLE OF PROJECT
GRAND CANYON PARASHANT, NATIONAL MONUMENT, ARIZONA
LOCATION WITHIN PARK
INSTALL FIRE SUPPRESSION AT DELLENBAUGH CABIN ADMIN SITE
TITLE OF PROJECT

JPM
DESIGNED
EBL
DRAWN
JPM
CHECKED
DWG. NO: XX
XXXXXX
DATE: 08/02/2024
SHEET 11 OF 18

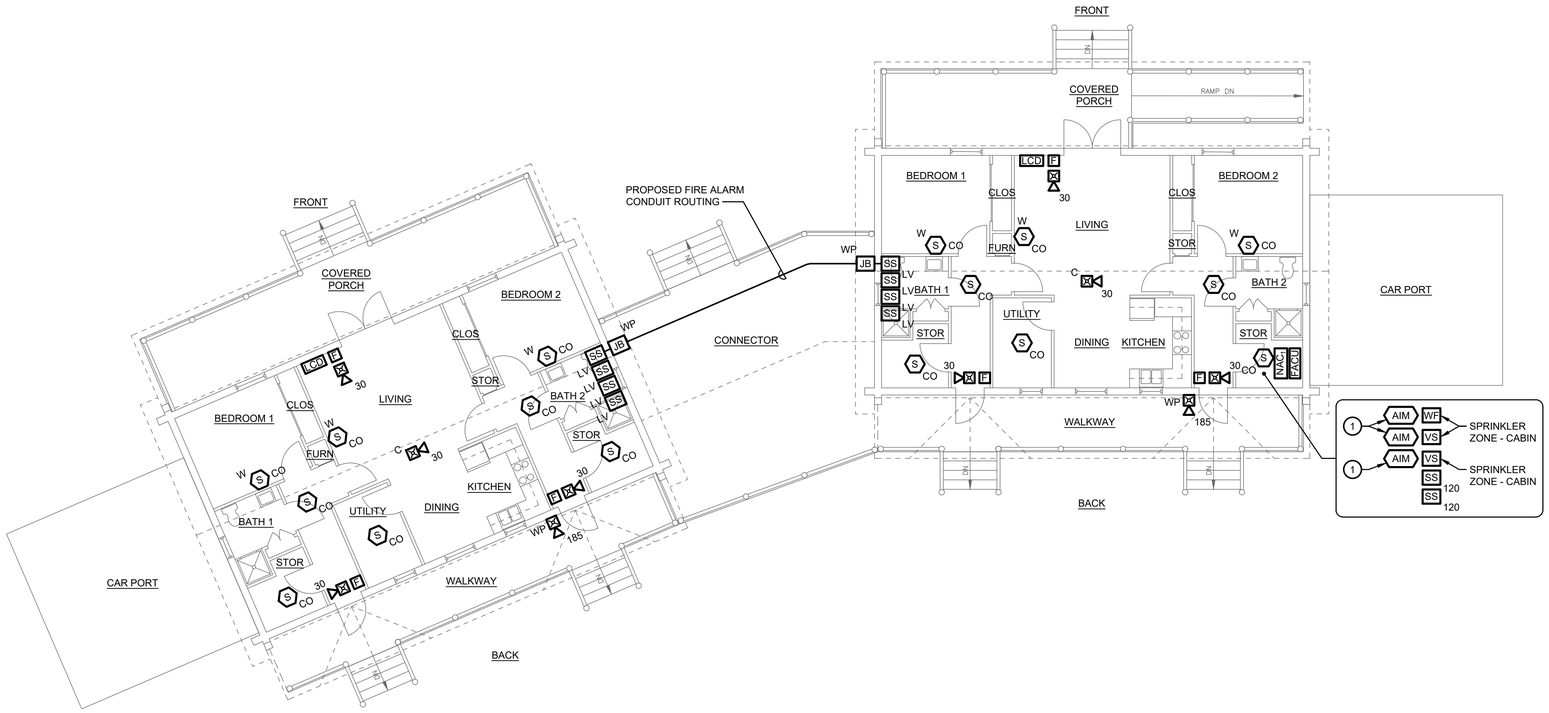

CABIN FLOOR PLANS - FIRE ALARM

SCALE: 1/8"=1'-0"

FIRE ALARM DEVICE QUANTITIES

SYMBOL	DESCRIPTION	QUANTITY
FACU	FIRE ALARM CONTROL UNIT	1
FATC	FIRE ALARM TERMINAL CABINET	-
LCD	REMOTE ANNUNCIATOR KEYPAD	2
NAC1	NOTIFICATION CIRCUIT POWER BOOSTER, EXTENDER PANEL	1
FAC	FIRE ALARM COMMUNICATOR (CELLULAR COMMUNICATOR)	-
DACT	DIGITAL ALARM COMMUNICATOR TRANSMITTER	-
HSSD-1	HIGH SENSITIVITY SMOKE DETECTOR	-
FAPS	HSSD POWER SUPPLY	-
F	ADDRESSABLE FIRE ALARM MANUAL STATION	6
	FIRE ALARM (STROBE) DEVICE - WALL MOUNTED	-
C	FIRE ALARM (STROBE) DEVICE - CEILING MOUNTED	-
	FIRE ALARM COMBINATION AUDIO/VISUAL (HORN/STROBE) DEVICE - WALL MOUNTED	6
C	FIRE ALARM COMBINATION AUDIO/VISUAL (HORN/STROBE) DEVICE - CEILING MOUNTED	2
S CO	COMBINATION SMOKE SENSOR - PHOTOELECTRIC TYPE/CARBON MONOXIDE	10
W S CO	WALL MOUNTED COMBINATION SMOKE SENSOR - PHOTOELECTRICAL/CARBON MONOXIDE	6
S SA,RA	DUCT MOUNTED SENSOR - PHOTOELECTRIC TYPE	-
R1	COMBINATION REMOTE INDICATING LAMP/TEST SWITCH	-
H F	HEAT SENSOR - FIXED TEMPERATURE TYPE	-
AIM	JUNCTION BOX WITH MONITOR MODULE	7
AOM	JUNCTION BOX WITH CONTROL MODULE	-
WP JB	JUNCTION BOX - WEATHERPROOF	2
SS LV	TRANSIENT VOLTAGE SURGE SUPPRESSOR (LOW VOLTAGE)	8
SS 120	TRANSIENT VOLTAGE SURGE SUPPRESSOR (120 VOLT)	2
WF	WATERFLOW ALARM DEVICE	1
VS	VALVE SUPERVISORY TAMPER SWITCH	2
LAP/HAP	LOW AIR/HIGH AIR PRESSURE SWITCH	-
WP	WEATHERPROOF ELECTRIC SPRINKLER ALARM COMBINATION AUDIO/VISUAL (HORN/STROBE)	2

GENERAL NOTES:

1. FOR FIRE ALARM LEGEND, GENERAL NOTES, MATRIX, AND DETAILS, SEE SHEETS FA1 AND FA2.
2. FOR ADDITIONAL CUTTING AND PATCHING REQUIREMENTS, REFER TO NPS SPEC SECTION 017329.

DRAWING NOTES:

(APPLIES TO THIS SHEET ONLY)

1. EXTEND 2#14-3/4"C FROM ADDRESSABLE MONITOR MODULE AND CONNECT TO ASSOCIATED WATERFLOW/VALVE TAMPER SUPERVISORY SWITCH.
2. EXTEND 2#14-3/4"C FROM ADDRESSABLE MONITOR MODULE AND CONNECT TO ASSOCIATED LOW TEMPERATURE SENSOR.

CAUTION:

IF THIS PLAN IS A REDUCTION, GRAPHIC SCALES MUST BE USED.

GRAPHIC SCALE

1/8"=1'-0"

0 4' 8' 16' 24'

100% SUBMISSION

PMIS/PKG. NO. 209050

Registered Professional Engineer (Fire Protection) CERTIFICATE NO. 50042 JEFFERY P. McBRIDE DATE SIGNED 12/17/2024 ARIZONA U.S.A.

FP FIRM

EBL ENGINEERS ESTABLISHED 1972

Mechanical - Electrical - Fire Protection

8005 Harford Road
Baltimore, Maryland 21234-5701
Tel: (410) 668-8000
E-mail: ebl@eblengineers.com

Mark	REVISION	Date	Issued by
-	-	-	-

CABIN FLOOR PLANS - FIRE ALARM

TITLE OF SHEET

FA5

SUB SHEET NO.

UNITED STATES
DEPARTMENT OF THE INTERIOR
NATIONAL PARK SERVICE - INTERIOR REGION 8
DESIGN AND PROJECT MANAGEMENT

INSTALL FIRE SUPPRESSION AT DELLENBAUGH CABIN ADMIN SITE
TITLE OF PROJECT

GRAND CANYON PARASHANT, NATIONAL MONUMENT, ARIZONA
LOCATION WITHIN PARK

INSTALL FIRE SUPPRESSION AT DELLENBAUGH CABIN ADMIN SITE
TITLE OF PROJECT

DESIGNED JPM
DRAWN EBL
CHECKED JPM
DWG. NO: XX XXXXXX
DATE: 08/02/2024
SHEET 12 OF 18

FIRE PROTECTION LEGEND

SYMBOL	DESCRIPTION
	SPRINKLER MAIN
	SPRINKLER BRANCHLINE
	SPRINKLER UNDERGROUND
	UPRIGHT SPRINKLER HEAD
	SIDEWALL SPRINKLER HEAD
	RISE IN PIPE
	DROP IN PIPE
	PIPE RISE/DROP
	PIPE CAP - FLUSHING CONNECTION
	ZONE CONTROL ASSEMBLY WITH TEST AND DRAIN UNIT (INCLUDES FLOW SWITCH)
	OS&Y VALVE W/ VALVE TAMPER SUPERVISORY SWITCH
	BUTTERFLY INDICATING-TYPE VALVE W/ VALVE TAMPER
	CHECK VALVE; DIRECTION OF FLOW INDICATED
	TWO-WAY FIRE DEPARTMENT CONNECTION WITH CAPS AND CHAINS
	INCOMING SERVICE/SPRINKLER RISER
8'-0"	CEILING HEIGHT
+0"℄	FINISHED FLOOR TO CENTERLINE OF PIPE
*0'-0"℄	BOTTOM OF SLAB TO CENTERLINE OF PIPE
	FIRE ALARM/SPRINKLER ZONE BOUNDARY

ABBREVIATIONS

A	AMPERE
ACT	ACOUSTICAL CEILING TILE
AFF	ABOVE FINISHED FLOOR
AHJ	AUTHORITY HAVING JURISDICTION
CX	CONNECT TO EXISTING
DWG	DRAWING
ETR	EXISTING TO REMAIN
EX	EXISTING
FA	FIRE ALARM
FDC	FIRE DEPARTMENT CONNECTION
FF	FINISHED FLOOR
FHV	FIRE HOSE VALVE
FL	FLOOR
FM	FACTORY MUTUAL
GPM	GALLONS PER MINUTE
GRD	GROUND
MAX	MAXIMUM
MIN	MINIMUM
NFPA	NATIONAL FIRE PROTECTION ASSOCIATION
NO.#	NUMBER
OS&Y	OUTSIDE SCREW & YOKE
PIV	POST INDICATING VALVE
POD	POINT OF DISCONNECT
PSI	POUNDS-PER-SQUARE INCH
QR	LISTED QUICK-RESPONSE
RN	RISER NIPPLE
RX	REMOVE EXISTING
SCH	SCHEDULE
SF	SQUARE FEET
STD	STANDARD
TBD	TO BE DETERMINED
TYP	TYPICAL
UG	UNDERGROUND
UL	UNDERWRITERS LABORATORIES
UNO	UNLESS NOTED OTHERWISE
WP	WEATHERPROOF
W/	WITH

PROJECT DESCRIPTION - FIRE SPRINKLER SYSTEM:

PROJECT DESCRIPTION - FIRE SPRINKLER SYSTEM

THE GENERAL SCOPE OF THIS PROJECT IS TO PROVIDE A NEW FIRE SPRINKLER SYSTEM FOR ALL AREAS OF BOTH CABINS, CAR PORTS, COVERED CONNECTOR STRUCTURE AND ALL COVERED WALKWAYS. THE FIRE SPRINKLER SYSTEM IS TO BE DESIGNED IN ACCORDANCE WITH THE CRITERIA INDICATED ON THE CONTRACT DRAWINGS.

THE NEW FIRE SPRINKLER SYSTEM IS INTENDED TO BE RUN WITH EXPOSED PIPING COORDINATED WITH THE INTERIOR CABIN STRUCTURE. THE NEW SYSTEM WILL BE FED FROM A NEW INCOMING SERVICE MAIN SUPPLIED FROM A NEW WATER BOOSTER PUMP INSTALLED IN AN EXISTING UNDERGROUND WATER TANK. THE SYSTEM SHALL MAKE USE OF A LISTED ANTIFREEZE SOLUTION (TYCO LFP ANTIFREEZE +), AND SHALL BE DESIGNED AND INSTALLED IN ACCORDANCE WITH THE REQUIREMENTS OF NFPA 13, SECTION 8.6. SEE DRAWINGS FOR DETAILS.

SPECIAL PROJECT CONSIDERATIONS:

PART 5 - SPECIAL CONSIDERATIONS

5.1 SITE

A. THE DELLENBAUGH ADMINISTRATIVE SITE IS AN ISOLATED, REMOTE LOCATION.

B. THERE IS NO CELLULAR, LANDLINE, CABLE, OR PUBLIC INTERNET SERVICE AT THE DELLENBAUGH ADMINISTRATIVE SITE.

C. THERE ARE NO MEDICAL FACILITIES WITHIN THE AREA, WITH THE CLOSEST MEDICAL FACILITIES BEING 90 MILES AWAY VIA THE ROAD SYSTEM.

D. THERE ARE NO VEHICLE MAINTENANCE SERVICES OR FUEL AVAILABLE AT THE SITE.

E. THERE ARE NO OTHER AMENITIES LOCATED IN THE AREA INCLUDING LODGING, GROCERY STORES, ENTERTAINMENT, RESTAURANTS, ETC.

F. ALL FOOD AND FUEL MUST BE TRANSPORTED TO THE SITE BY AND AT CONTRACTOR'S EXPENSE.

G. LODGING IS NOT AVAILABLE AT THE DELLENBAUGH ADMINISTRATIVE SITE.

1. CONTRACTOR MUST PROVIDE OWN LODGING (TRAILER, MOTORHOME, TENT)

2. LODGING AS DISPERSED RECREATION CAMPING IS AVAILABLE ON BUREAU OF LAND MANAGEMENT (BLM) LANDS NEAR THE JOB SITE.

   a. THERE ARE NO SERVICES SUCH AS WATER, ELECTRICITY, SEWER CONNECTION, TRASH PICKUP OR TABLES PROVIDED IN DISPERSED CAMPING AREAS.

   b. CAMPING PERMITTED ONLY IN PRE-EXISTING, DISTURBED AREAS.

   c. COR WILL IDENTIFY SUITABLE BLM DISPERSED CAMPING AREAS.

   d. FOLLOW LEAVE NO TRACE GUIDELINES.

   e. A PORTABLE TOILET, PROVIDED BY AND SERVICED BY, THE CONTRACTOR, IS REQUIRED AT THE CAMPING LOCATION UNLESS THE RECREATIONAL VEHICLE USED FOR LODGING HAS ADEQUATE WASTEWATER STORAGE (BLACK AND GRAY WATER)

   f. DRAINING OF GRAY WATER DIRECTLY TO THE GROUND IS PROHIBITED.

H. THERE IS NO SANITARY DUMP STATION AT THE DELLENBAUGH ADMINISTRATIVE SITE.

I. A PORTABLE TOILET FOR THE JOBSITE WILL BE PROVIDED BY THE CONTRACTOR. THE CONTRACTOR WILL MAINTAIN AND REMOVE THE PORTABLE TOILET FROM THE JOB SITE AT THE COMPLETION OF THE JOB.

J. COMMUTING TO THE JOB SITE FROM ST. GEORGE, UT EACH DAY IS NOT RECOMMENDED.

5.2 ROAD CONDITIONS

A. ACCESS TO THE WORK SITE IS BY UNIMPROVED, BUREAU OF LAND MANAGEMENT (BLM) AND MOHAVE COUNTY, AZ MAINTAINED ROADS.

B. THE CONDITION OF THE ROADS VARIES DEPENDING ON THE TIME OF YEAR AND CAN BE IN FAIR TO POOR CONDITION.

C. HIGH CLEARANCE, 4-WHEEL DRIVE VEHICLES ARE RECOMMENDED FOR TRAVEL TO AND FROM THE JOB SITE.

D. IT IS RECOMMENDED THAT VEHICLES BE EQUIPPED WITH LOAD RANGE E TIRES DESIGNED FOR OFF PAVEMENT USE.

E. IT IS RECOMMENDED THAT VEHICLES CARRY A SECOND SPARE TIRE, A TIRE PLUG KIT AND AN AIR COMPRESSOR AS FLAT TIRES ARE A COMMON OCCURRENCE WHILE TRAVELING IN THE AREA.

F. DUE TO THE SHEER SIZE OF THE REGION AND THE NUMBER OF ROADS, IT IS NOT POSSIBLE TO PROVIDE UPDATED TRAVEL CONDITIONS ON THE ARIZONA STRIP AFTER RAIN OR SNOW EVENT.

G. EXPECT ALL ROADS TO BE IMPASSIBLE AFTER WET WEATHER.

H. DURING THE SUMMER MONSOON SEASON (JUNE - SEPTEMBER), PLAN TRAVEL BEFORE 1 PM TO AVOID THUNDERSTORMS.

I. RANGE CATTLE AS WELL AS OTHER WILDLIFE MAY ALSO BE ENCOUNTERED ON THE ROADS AND CAUTION IS ADVISED.

5.3 COMMUNICATION

A. CELLULAR TELEPHONE COVERAGE IS LIMITED TO A FEW SPORADIC LOCATIONS.

B. CELLULAR TELEPHONE SIGNAL BOOSTER MAY IMPROVE CELLULAR SERVICE IN MARGINAL RECEPTION AREAS.

C. SATELLITE PHONE OR SATELLITE MESSENGER SUCH AS A GARMIN INREACH IS REQUIRED.

FIRE PROTECTION DESIGN CRITERIA:

1. THE REQUIRED FIRE SPRINKLER SYSTEM SHALL ADHERE TO SPECIFIC HYDRAULIC DESIGN REQUIREMENTS. WHEN THE REQUIREMENTS OF NFPA 13, LOCAL OR STATE AUTHORITIES ARE MORE STRINGENT, THOSE REQUIREMENTS SHALL GOVERN. IF NOT, THE SYSTEM SHALL COMPLY WITH THE FOLLOWING:
   A. LIGHT HAZARD - AREAS SHALL BE HYDRAULICALLY DESIGNED BASED ON A DENSITY OF 0.10 GPM/SF OVER THE MOST REMOTE SF. A MAXIMUM SPRINKLER HEAD SPACING SHALL BE 225 SF.
   B. ORDINARY HAZARD, GROUP 2 - AREAS SHALL BE HYDRAULICALLY DESIGNED BASED ON A DENSITY OF 0.20 GPM/SF OF THE MOST REMOTE 1500 SF. THE MAXIMUM SPRINKLER HEAD SPACING SHALL BE 130 SF.

2. ALL FIRE SPRINKLER SYSTEM PIPING SHALL ADHERE TO THE FOLLOWING REQUIREMENTS:
   A. 2-INCH AND SMALLER - THREADED BLACK STEEL SCHEDULE 40.
   B. 2-1/2-INCH AND LARGER - ROLL GROOVED BLACK STEEL SCHEDULE 10, UNO.
   C. BRANCHLINE OUTLETS AT MAIN PIPING SHALL BE SHOP-WELDED.
   D. ALL PIPE AND FITTINGS SHALL BE PAINTED BLACK.
   E. ALL PIPING SHALL BE PROVIDED IN ACCORDANCE WITH NFPA 13.
   F. ALL PIPING WILL BE INSTALLED EXPOSED.

3. FIRE SPRINKLER HEADS SHALL BE PROVIDED IN ACCORDANCE WITH NFPA 13 AND THE CONTRACT DOCUMENTS. SPRINKLER HEADS SHALL BE PROVIDED AS FOLLOWS;
   A. 165°F TEMPERATURE-RATED QUICK RESPONSE, BLACK FINISH, UPRIGHT.

CODES AND STANDARDS REFERENCES:

ALL REFERENCES TO IBC SHALL MEAN THE MOST RECENT EDITION AT THE TIME OF AWARD.
ALL REFERENCES TO NFPA 13 SHALL MEAN THE MOST RECENT EDITION AT THE TIME OF AWARD.
ALL REFERENCES TO NFPA 14 SHALL MEAN THE MOST RECENT EDITION AT THE TIME OF AWARD.
ALL REFERENCES TO NFPA 24 SHALL MEAN THE MOST RECENT EDITION AT THE TIME OF AWARD.
ALL REFERENCES TO NFPA 25 SHALL MEAN THE MOST RECENT EDITION AT THE TIME OF AWARD.
ALL REFERENCES TO NFPA 70 SHALL MEAN THE MOST RECENT EDITION AT THE TIME OF AWARD.
ALL REFERENCES TO NFPA 72 SHALL MEAN THE MOST RECENT EDITION AT THE TIME OF AWARD.
ALL REFERENCES TO NFPA 101 SHALL MEAN THE MOST RECENT EDITION AT THE TIME OF AWARD.
ALL REFERENCES TO NFPA 241 SHALL MEAN THE MOST RECENT EDITION AT THE TIME OF AWARD.
ALL REFERENCES TO NFPA 291 SHALL MEAN THE MOST RECENT EDITION AT THE TIME OF AWARD.

FIRE PROTECTION (FIRE SPRINKLER) GENERAL NOTES:

1. PROVIDE A COMPLETE AND OPERATIONAL FIRE SPRINKLER SYSTEM. THE SYSTEM SHALL BE LAID OUT, FABRICATED, INSTALLED, COORDINATED, TESTED, AND PLACED INTO SERVICE IN ACCORDANCE WITH NFPA 13, NFPA 14, NFPA 24, NFPA 25, NFPA 70, NFPA 72, NFPA 101, NFPA 241, NFPA 291, IBC, LOCAL AUTHORITY REQUIREMENTS, AND THE CONTRACT DOCUMENTS.
2. THE FIRE PROTECTION INSTALLER(S) SHALL SUBMIT COMPLETE LAYOUT SHOP DRAWINGS, AND ANNOTATED MANUFACTURER'S DATA INFORMATION TO THE CONTRACTING REPRESENTATIVE AND ENGINEER OF RECORD FOR REVIEW AND APPROVAL. APPROVALS SHALL BE OBTAINED PRIOR TO THE PURCHASE OR INSTALLATION OF ANY PART OF THE FIRE PROTECTION SYSTEM.
3. THE FIRE PROTECTION INSTALLER(S) SHALL BE RESPONSIBLE FOR ALL APPLICABLE TRADE PERMITS, CURRENT HYDRANT WATERFLOW DATA AND ASSOCIATED FEES, AND REQUESTS/FEES FOR INSPECTION AND TESTING OF THE SYSTEM AS REQUIRED BY NPS.
4. THE FINAL DESIGN OF THE FIRE PROTECTION SYSTEM SHALL BE COORDINATED WITH FIELD CONDITIONS.
5. THE FIRE PROTECTION INSTALLER(S) SHALL COORDINATE ALL SYSTEM PIPING, DEVICES, CONDUIT, EQUIPMENT, AND RELATED APPURTENANCES WITH THE BUILDING STRUCTURAL, MECHANICAL AND ELECTRICAL ELEMENTS, INCLUDING BUT NOT LIMITED TO, STRUCTURAL MEMBERS AND SYSTEMS, AIR DUCTS AND OUTLETS, LIGHT FIXTURES, AND SIMILAR EQUIPMENT AND MATERIAL THAT MAY INTERFERE WITH THE PROPER INSTALLATION AND OPERATION OF THE SYSTEM. SUBMITTED LAYOUT SHOP DRAWINGS SHALL BE COORDINATED WITH ALL TRADES.
6. THE FIRE PROTECTION SYSTEM PIPING, DEVICES, HANGERS, CABINETS, EQUIPMENT AND RELATED APPURTENANCES SHALL BE INSTALLED NEAT AND IN A WORKMANLIKE MANNER. CONFORM TO THE LATEST TRADE PRACTICES. PIPING SHALL BE ROUTED PARALLEL OR PERPENDICULAR TO BUILDING LINES AND PROPERLY MOUNTED/SECURED TO THE BUILDING STRUCTURE.
7. THE FIRE PROTECTION INSTALLER(S) SHALL REPAIR OR REPLACE ANY NEW OR EXISTING ITEM, WALL, FLOOR, CEILING, CEILING TILE, ETC. DAMAGED IN CONJUNCTION WITH ALL WORK. REPAIR OR REPLACEMENT SHALL BE AT THE INSTALLER'S COST.
8. THE FIRE PROTECTION INSTALLER(S) SHALL PROVIDE ALL NECESSARY PARTS AND ACCESSORIES EVEN THOUGH THE PARTS AND ACCESSORIES ARE NOT SPECIFICALLY MENTIONED OR SHOWN WITHIN THE CONTRACT DOCUMENTS.
9. ALL FIRE SPRINKLER SYSTEM PIPING AND EQUIPMENT SHOWN ARE FOR SUGGESTIVE PURPOSES ONLY AND SHALL NOT BE SCALED. THE FIRE PROTECTION INSTALLER(S) SHALL BE RESPONSIBLE FOR FIELD VERIFYING ALL CONDITIONS. ALL ITEMS OF EQUIPMENT SHALL BE INSTALLED BY ON-THE-JOB MEASUREMENTS AND COORDINATED WITH ALL OTHER TRADES. NOTIFY THE CONTRACTING REPRESENTATIVE IMMEDIATELY, IN WRITING, OF ANY DISCREPANCY BETWEEN FIELD CONDITIONS AND THE CONTRACT DOCUMENTS.
10. SPRINKLER HEADS LOCATED UNDER OBSTRUCTIONS NOT SHOWN FOR CLARITY. SPRINKLER HEADS SHALL BE PROVIDED UNDER PIPE AND DUCT OBSTRUCTIONS GREATER THAN 4 FEET IN WIDTH PER NFPA 13 AT NO ADDITIONAL COST TO THE OWNER.
11. ALL AUXILIARY DRAIN VALVES SHALL BE LOCATED NOT MORE THAN 7 FEET ABOVE FINISHED FLOOR.
12. FIRE SPRINKLER PIPE HANGERS AND PIPE SUPPORTS SHALL BE PROVIDED IN ACCORDANCE WITH NFPA 13. ALL HANGER MATERIALS SHALL BE UL LISTED.
13. THE TERM 'PROVIDE' MEANS TO FURNISH AND INSTALL, COMPLETE AND READY FOR THE INTENDED USE.
14. THE ENGINEER OF RECORD SHALL NOT BE RESPONSIBLE FOR THE DISCOVERY OR REMOVAL OF ASBESTOS AND LEAD PAINT IN THIS PROJECT. THE INSTALLER(S) SHALL NOTIFY THE CONTRACTING REPRESENTATIVE IF ASBESTOS OR LEAD PAINT IS SUSPECTED OR DISCOVERED. THE CONTRACTING REPRESENTATIVE SHALL RETAIN A COMPETENT CONSULTANT WITH KNOWLEDGE AND EXPERIENCE IN THE DETECTION OF ASBESTOS AND LEAD PAINT. THIS CONSULTANT SHALL VERIFY THE PRESENCE OF SUCH MATERIAL AND RECOMMEND THE PROPER METHOD FOR REMOVAL AND DISPOSAL.
15. THE FIRE PROTECTION SYSTEM SHALL BE A PHASED INSTALLATION AND SHALL BE INSTALLED IN AN OCCUPIED BUILDING.
16. ALL DUST GENERATION SHALL BE AVOIDED. IF DUST GENERATION CANNOT BE AVOIDED, THE DUST AND DEBRIS SHALL BE CLEANED UP IMMEDIATELY AND REMOVED FROM THE BUILDING AS WORK PROGRESSES. AT MINIMUM, THE FIRE PROTECTION INSTALLER(S) SHALL CLEAN AND VACUUM WORK AREAS AT THE END OF EACH WORK SHIFT.
17. EXISTING DATA, PIPING, AND RELATED SYSTEM COMPONENTS INDICATED ARE DIAGRAMMATIC. THE FIRE PROTECTION INSTALLER(S) SHALL FIELD VERIFY CONDITIONS BY ON-THE-JOB MEASUREMENTS PRIOR TO FABRICATION OR INSTALLATION. NOTIFY THE CONTRACTING REPRESENTATIVE IMMEDIATELY, IN WRITING, OF ANY DISCREPANCY BETWEEN FIELD CONDITIONS AND THE CONTRACT DOCUMENTS.
18. THE FIRE PROTECTION INSTALLER(S) SHALL FIELD LOCATE THE NEED FOR 212°F & 286°F SPRINKLERS DUE TO UNIT HEATERS. OR OTHER HEAT PRODUCING EQUIPMENT.

100% SUBMISSION

PMIS/PKG. NO. 209050

NATIONAL PARK SERVICE

Registered Professional Engineer, Fire Protection — CERTIFICATE NO. 50042 — JEFFERY P. McBRIDE — DATE SIGNED 12/15/2023 — ARIZONA U.S.A.

FP FIRM

EBL ENGINEERS — ESTABLISHED 1972
Mechanical - Electrical - Fire Protection
8005 Harford Road
Baltimore, Maryland 21234-5701
Tel: (410) 668-6000
E-mail: ebl@eblengineers.com

Mark	REVISION	Date	Issued by
-	-	-	-

FIRE PROTECTION GENERAL NOTES, LEGEND, AND ABBREVIATIONS
TITLE OF SHEET

FP1
SUB SHEET NO.

UNITED STATES
DEPARTMENT OF THE INTERIOR
NATIONAL PARK SERVICE - INTERIOR REGION 8
DESIGN AND PROJECT MANAGEMENT

INSTALL FIRE SUPPRESSION AT DELLENBAUGH CABIN ADMIN SITE
TITLE OF PROJECT

GRAND CANYON PARASHANT, NATIONAL MONUMENT, ARIZONA
LOCATION WITHIN PARK

INSTALL FIRE SUPPRESSION AT DELLENBAUGH CABIN ADMIN SITE
TITLE OF PROJECT

DESIGNED	JPM
DRAWN	EBL
CHECKED	JPM
DWG. NO:	XX XXXXXX
DATE:	08/02/2024
SHEET	13 OF 18

FIRE PROTECTION SPECIFICATIONS

SECTION 211313 - WET PIPE FIRE SPRINKLER SYSTEMS

PART 1 - GENERAL

1.1 SYSTEM DESCRIPTION

A. WET PIPE SPRINKLER SYSTEM: SYSTEM WITH AUTOMATIC SPRINKLERS ATTACHED TO PIPING SYSTEM CONTAINING WATER AND CONNECTED TO WATER SUPPLY SO THAT WATER DISCHARGES IMMEDIATELY FROM SPRINKLERS WHEN THEY ARE OPENED BY FIRE. THE SYSTEM SHALL MAKE USE OF A LISTED ANTIFREEZE SOLUTION (TYCO LFP ANTIFREEZE +).

1.2 SYSTEM PERFORMANCE REQUIREMENTS

A. DESIGN AND OBTAIN APPROVAL FROM AUTHORITY HAVING JURISDICTION FOR FIRE PROTECTION SYSTEMS SPECIFIED.

1. THE CONTRACTOR SHALL FURNISH ALL LABOR, TOOLS, MATERIALS AND EQUIPMENT AND PERFORM ALL OPERATIONS REQUIRED FOR THE COMPLETE INSTALLATION OF ALL FIRE PROTECTION WORK, AS REQUIRED ON THE DRAWINGS, SPECIFIED OR SHOWN, EXCEPT WHERE SPECIFICALLY EXCLUDED HEREIN.

a. THE FIRE PROTECTION WORK SHALL COMPLY WITH ALL REQUIREMENTS OF THE CODES AND REGULATIONS OF AUTHORITIES HAVING JURISDICTION AND LOCAL AND STATE AUTHORITIES.

b. ANY MATERIALS SHOWN OR SPECIFIED IN THE DRAWINGS AND SPECIFICATIONS SHALL BE FURNISHED AND INSTALLED BY THE CONTRACTOR. MATERIALS REASONABLY IMPLIED AND USUALLY INCLUDED UNDER GOOD INDUSTRY PRACTICE AND/OR FOR PROPER AND SAFE COMPLETION AND OPERATION OF THE WORK DESCRIBED HEREIN, SHALL ALSO BE FURNISHED BY THE CONTRACTOR. THE DRAWINGS, WHEN REQUIREMENTS ARE MORE STRINGENT THAN NFPA, IBC OR THE LOCAL AUTHORITY REQUIREMENTS, SHALL TAKE PRECEDENCE.

B. THE SPRINKLER SYSTEMS SHALL BE HYDRAULICALLY DESIGNED ACCORDING TO NFPA 13. A MARGIN OF SAFETY FOR AVAILABLE WATER FLOW AND PRESSURE OF 10 PERCENT SHALL BE PROVIDED, INCLUDING LOSES THROUGH WATER SERVICE PIPING, VALVES AND BACKFLOW PREVENTERS.

1. MINIMUM DISCHARGE REQUIREMENTS AND MAXIMUM SPRINKLER SPACING SHALL BE AS REQUIRED BY NFPA 13 AND AS INDICATED ON THE CONTRACT DRAWINGS.

1.3 SUBMITTALS

A. PRODUCT DATA FOR FIRE PROTECTION SYSTEM COMPONENTS SHALL BE INCLUDED.

B. SPRINKLER SYSTEM DRAWINGS IDENTIFIED AS "WORKING PLANS," AND HYDRAULIC CALCULATIONS PREPARED ACCORDING TO NFPA 13. SUBMIT REQUIRED NUMBER OF SETS TO THE ENGINEER OF RECORD FOR REVIEW AND SUBMIT TO THE AUTHORITY HAVING JURISDICTION FOR REVIEW, COMMENT, AND APPROVAL.

C. THE FIRE SPRINKLER INSTALLER SHALL DEVELOP AND COORDINATE DRAWINGS WITH OTHER DESIGN DISCIPLINES IN ORDER TO OBTAIN A SPRINKLER SYSTEM PERMIT PRIOR TO THE START OF WORK. THE CONTRACTOR SHALL FIELD VERIFY ALL DIMENSIONS AND PIPING LOCATIONS AND MODIFY THE DRAWINGS AS NECESSARY PRIOR TO FABRICATION OF PIPING. ALL CHANGES DUE TO FIELD CONDITIONS SHALL BE DOCUMENTED AND RESUBMITTED BY THE CONTRACTOR (SHOP DRAWINGS AND HYDRAULIC CALCULATIONS) TO THE AHJ PLANS REVIEW OFFICE AND THE ENGINEER OF RECORD AS “REVISED DRAWINGS FOR REVIEW”.

D. TEST REPORTS AND CERTIFICATES AS DESCRIBED IN NFPA 13. INCLUDE "CONTRACTOR'S MATERIAL & TEST CERTIFICATE FOR ABOVEGROUND PIPING."

1.4 QUALITY ASSURANCE

A. MANUFACTURER QUALIFICATIONS: FIRMS WHOSE EQUIPMENT, SPECIALTIES, AND ACCESSORIES ARE LISTED BY PRODUCT NAME AND MANUFACTURER IN UL FIRE PROTECTION EQUIPMENT DIRECTORY AND/OR FM APPROVAL GUIDE AND THAT CONFORM TO OTHER REQUIREMENTS INDICATED.

B. LISTING/APPROVAL STAMP, LABEL, OR OTHER MARKING: ON EQUIPMENT, SPECIALTIES, AND ACCESSORIES MADE TO SPECIFIED STANDARDS.

C. INSTALLER'S QUALIFICATIONS: FIRMS QUALIFIED TO INSTALL AND ALTER FIRE PROTECTION PIPING, EQUIPMENT, SPECIALTIES, AND ACCESSORIES, AND REPAIR AND SERVICE EQUIPMENT IN ACCORDANCE WITH NFPA. A QUALIFIED FIRM IS ONE THAT IS A LICENSED FIRE SPRINKLER CONTRACTOR AND THAT IS EXPERIENCED IN SUCH WORK (MINIMUM OF 5 PREVIOUS PROJECTS SIMILAR IN SIZE AND SCOPE TO THIS PROJECT), FAMILIAR WITH PRECAUTIONS REQUIRED, AND IN COMPLIANCE WITH THE REQUIREMENTS OF THE AUTHORITY HAVING JURISDICTION. SUBMIT EVIDENCE OF QUALIFICATIONS TO THE CONTRACTING REPRESENTATIVE UPON REQUEST.

D. NFPA STANDARDS: EQUIPMENT, SPECIALTIES, ACCESSORIES, INSTALLATION, AND TESTING SHALL COMPLY WITH NFPA CODES AND STANDARDS AS INDICATED ON THE CONTRACT DRAWINGS.

E. ALL SUBMITTALS SHALL INCLUDE THE COVERSHEET FORM CM-16. COVERSHEET SHALL BE PROVIDED BY THE GOVERNMENT UPON REQUEST.

PART 2 - PRODUCTS

2.1 GENERAL

A. ALL MATERIALS NECESSARY TO MAKE THE INSTALLATION COMPLETE IN EVERY DETAIL SHALL BE FURNISHED AND INSTALLED WHETHER OR NOT SPECIFICALLY SHOWN ON THE DRAWINGS OR SPECIFIED HEREIN.

2.2 MANUFACTURERS

A. MANUFACTURERS: SUBJECT TO COMPLIANCE WITH REQUIREMENTS, PROVIDE PRODUCTS LISTED FOR FIRE PROTECTION SERVICE PER UL DIRECTORY AND FM APPROVED.

2.3 PIPES AND TUBES

A. BLACK STEEL PIPE: ASTM A 53, OR ASTM A135, THREADABLE BLACK STEEL PIPE (NOT LESS THAN SCHEDULE 40) IN SIZES 2 INCHES AND SMALLER AND SCHEDULE 10 BLACK STEEL PIPE (ROLL GROOVED) IN SIZES 2-1/2 INCHES AND LARGER.

2.4 PIPE FITTINGS

A. CAST-IRON THREADED FLANGES: ASME B16.1, CLASS 250, RAISED GROUND FACE, BOLT HOLES SPOT FACED.

B. DUCTILE-IRON AND GRAY-IRON FLANGED FITTINGS: AWWA C110, 250-PSIG (1725-KPA) MINIMUM PRESSURE RATING, WITH AWWA C104 CEMENT-MORTAR LINING.

C. CAST-IRON THREADED FITTINGS: ASME B16.4, CLASS 125 AND 250, STANDARD PATTERN, WITH THREADS ACCORDING TO ASME B1.20.1.

D. MALLEABLE-IRON THREADED FITTINGS: ASME B16.3, CLASS 300, STANDARD PATTERN, WITH THREADS ACCORDING TO ASME B1.20.1.

E. STEEL FLANGES AND FLANGED FITTINGS: ASME B16.5.

F. GROOVED-END FITTINGS FOR STEEL PIPE: UL-LISTED AND FM-APPROVED, ASTM A 536, GRADE 65-45-12 DUCTILE IRON OR ASTM A 47 GRADE 32510 MALLEABLE IRON, WITH GROOVES OR SHOULDERS DESIGNED TO ACCEPT GROOVED COUPLINGS..

G. GROOVED-END-PIPE COUPLINGS FOR STEEL PIPING: AWWA C606 AND UL 213, RIGID PATTERN, UNLESS OTHERWISE INDICATED, FOR STEEL-PIPE DIMENSIONS. INCLUDE FERROUS HOUSING SECTIONS, EPDM-RUBBER GASKET, AND BOLTS AND NUTS.

2.5 JOINING MATERIALS

A. COUPLINGS FOR GROOVED-END STEEL PIPE AND GROOVED-END FERROUS FITTINGS: UL 213, AWWA C606, ASTM A 536 DUCTILE-IRON OR ASTM A 47 MALLEABLE-IRON HOUSING, WITH ENAMEL FINISH. INCLUDE SYNTHETIC-RUBBER GASKET WITH CENTRAL-CAVITY, PRESSURE-RESPONSIVE DESIGN; ASTM A 183 CARBON-STEEL BOLTS AND NUTS; AND LOCKING PIN, TOGGLE, OR LUGS TO SECURE GROOVED PIPE AND FITTINGS.

FIRE PROTECTION SPECIFICATIONS (CONTINUED):

2.6 SPECIALTY VALVES

A. GLOBE VALVES: CAST BRONZE CONSTRUCTION IN ACCORDANCE WITH ASTM B-62 SPECIFICATIONS 85-5-5-5 FOR SUPERIOR CORROSION RESISTANCE. THE HANDWHEEL SHALL BE MANUFACTURED FROM CAST IRON MATERIALS TO COMPLY WITH THE AMERICAN WATER WORKS ASSOCIATION C-509 AND ASTM A-126 CLASS B STANDARDS. VALVES SHALL BE SUITABLE FOR 175 PSI WORKING PRESSURE.

B. BALL VALVES: FORGED BRASS WITH TEFLON SEATS AND SHALL BE PROVIDED WITH A VINYL-COVERED HANDLE.

C. TEST DRAIN VALVE ASSEMBLIES: UL LISTED AND FM APPROVED WITH BRONZE BODY. TEST/DRAIN VALVE ASSEMBLIES SHALL BE OPERATED BY OPENING/CLOSING ONE HANDLE ONLY. TEST ASSEMBLIES THAT REQUIRE THE OPENING OF MULTIPLE VALVES AT ONE TIME WILL NOT BE ACCEPTED. VALVES SHALL BE SUITABLE FOR 175 PSI WORKING PRESSURE.

2.7 SPRINKLERS

A. PROVIDE AS INDICATED ON THE CONTRACT DRAWINGS OR APPROVED EQUAL. NO O-RINGS SHALL BE PERMITTED IN THE SPRINKLER HEAD.

B. SPARE SPRINKLERS: PROVIDE STOCK OF SPARE SPRINKLERS AS REQUIRED BY NFPA 13.

C. SPRINKLER CABINETS: FINISHED STEEL CABINET AND HINGED COVER, WITH SPACE FOR MINIMUM OF 12 SPARE SPRINKLERS PLUS SPRINKLER WRENCH, SUITABLE FOR WALL MOUNTING. INCLUDE NUMBER OF SPRINKLERS REQUIRED BY NFPA 13 AND WRENCHES FOR SPRINKLERS. INCLUDE SEPARATE CABINET WITH SPRINKLERS AND WRENCH FOR EACH STYLE SPRINKLER ON PROJECT.

D. THE CABINET SHELVES SHALL BE MARKED WITH A PERMANENTLY ATTACHED ETCHED METAL OR PLASTIC SIGN TO INDICATE EACH TYPE OF SPRINKLER HEAD INSTALLED AND THEIR LOCATIONS WITHIN THE BUILDING.

2.8 SPECIALTY SPRINKLER FITTINGS

A. SPECIALTY FITTINGS: UL-LISTED AND/OR FM-APPROVED, MADE OF STEEL, DUCTILE IRON, OR OTHER MATERIALS COMPATIBLE WITH SYSTEM MATERIALS AND APPLICATIONS WHERE USED.

B. SPRINKLER ALARM TEST FITTINGS: DUCTILE-IRON HOUSING WITH 1-INCH INLET AND OUTLET, INTEGRAL TEST VALVES, COMBINATION ORIFICE AND SIGHT GLASS, AND THREADED ENDS.

C. FLEX-HEAD FITTINGS SHALL NOT BE USED.

2.9 PIPE HANGERS

A. ALL HANGER ASSEMBLIES SHALL BE UL LISTED AND FM APPROVED. NO SPRINKLER PIPING IS TO BE SUPPORTED FROM ANY MECHANICAL OR ELECTRICAL DEVICES AND/OR EQUIPMENT (DUCTS, LIGHTS, ETC.). NO CHAINS, WIRE OR PERFORATED BAND IRON WILL BE PERMITTED FOR HANGERS.

2.10 ALARM DEVICES

A. WATERFLOW PRESSURE SWITCH: UL 753. ELECTRICALLY SUPERVISED. TWO SINGLE-POLE, DOUBLE-THROW CIRCUIT SWITCHES FOR ISOLATED ALARM AUXILIARY CONTACTS, 7 A, 125-V AC AND 0.25 A, 24-V DC. 250 PSIG PRESSURE RATING. HORIZONTAL OR VERTICAL INSTALLATION.

B. SUPERVISORY PRESSURE SWITCH: UL 753. ELECTRICALLY SUPERVISED. TWO SINGLE-POLE, DOUBLE-THROW CIRCUIT SWITCHES FOR ISOLATED ALARM AUXILIARY CONTACTS, 7 A, 125-V AC AND 0.25 A, 24-V DC. 250 PSIG PRESSURE RATING. HORIZONTAL OR VERTICAL INSTALLATION.

C. VALVE TAMPER SUPERVISORY SWITCHES: UL 346. ELECTRICALLY SUPERVISED. SINGLE-POLE, DOUBLE-THROW SWITCH WITH NORMALLY CLOSED CONTACTS. SIGNALS THAT CONTROL VALVE IS IN OTHER THAN FULLY OPEN OR CLOSED NORMAL POSITION.

PART 3 - EXECUTION

3.1 INSTALLATION

A. INSTALLATION, WORKMANSHIP, FABRICATION, ASSEMBLY, EXAMINATION, INSPECTION, FLUSHING AND TESTING SHALL BE IN ACCORDANCE WITH NFPA 13, EXCEPT AS MODIFIED HEREIN. INSTALL PIPING STRAIGHT AND TRUE TO BEAR EVENLY ON HANGERS AND SUPPORTS. PIPING SHALL BE PITCHED TO ENSURE COMPLETE DRAINAGE OF THE SYSTEM PIPING. KEEP THE INTERIOR AND ENDS OF NEW PIPING AFFECTED BY THE CONTRACTOR'S OPERATIONS THOROUGHLY CLEANED OF WATER AND FOREIGN MATTER. KEEP PIPING SYSTEMS CLEAN DURING INSTALLATION BY MEANS OF PLUGS OR OTHER APPROVED METHODS. WHEN WORK IS NOT IN PROGRESS, SECURELY CLOSE OPEN ENDS OF PIPING AND FITTINGS SO THAT WATER AND FOREIGN MATTER WILL NOT ENTER THE PIPING OR FITTINGS. INSPECT PIPING BEFORE PLACING INTO POSITION.

3.2 SPRINKLER SYSTEM PIPING APPLICATIONS

A. USE PIPE, TUBE, FITTINGS, AND JOINING METHODS ACCORDING TO THE FOLLOWING APPLICATIONS. PIPING MAY BE JOINED WITH FLANGES INSTEAD OF INDICATED JOINTS. USE GROOVED-END FITTINGS WITH GROOVED COUPLINGS THAT ARE MADE BY THE SAME MANUFACTURER AND THAT COMPLY WITH LISTING WHEN USED TOGETHER FOR GROOVED-COUPLING JOINTS.

1. MECHANICAL-"T" BOLTED-BRANCH-OUTLET FITTINGS, INSTEAD OF FITTING TYPES SPECIFIED, MAY NOT BE USED FOR BRANCH CONNECTIONS.

2. GROUND-JOINT UNIONS SHALL NOT BE USED.

3. PLAIN-END FITTINGS WHICH INCORPORATE A LOCKING-LUG, ROTATING RETAINER LUG, OR QUARTER-TURN RETAINER LUG SHALL NOT BE USED.

4. PRESS-FIT FITTINGS SHALL NOT BE USED.

B. SIZES 2 INCHES AND SMALLER: ASTM A 53, A 135, OR A 795; SCHEDULE 40 STEEL PIPE WITH THREADED ENDS, CAST-IRON OR MALLEABLE-IRON THREADED FITTINGS, AND THREADED JOINTS.

C. SIZES 2-1/2 INCHES TO 10 INCHES: ASTM A 53, A 135, OR A 795; SCHEDULE 40 STEEL PIPE WITH CUT-GROOVE ENDS, GROOVED-END STEEL PIPE FITTINGS, AND GROOVED-COUPLING JOINTS.

D. SIZES 2-1/2 INCHES TO 10 INCHES: ASTM A 135 OR A 795, SCHEDULE 10 STEEL PIPE WITH ROLLED-GROOVE ENDS, GROOVED-END STEEL PIPE FITTINGS, AND GROOVED-COUPLING JOINTS.

3.3 VALVE APPLICATIONS

A. DRAWINGS INDICATE VALVE TYPES TO BE USED. WHERE SPECIFIC VALVE TYPES ARE NOT INDICATED, THE FOLLOWING REQUIREMENTS APPLY:

1. SHUTOFF DUTY: USE GATE, BALL, OR BUTTERFLY VALVES.

2. THROTTLING DUTY: USE GLOBE, BALL, OR BUTTERFLY VALVES.

3. ALL VALVES SHALL BE INSTALLED IN CONVENIENTLY ACCESSIBLE LOCATIONS. VISIBLE LABELING SHALL BE PROVIDED TO IDENTIFY VALVE LOCATIONS. PROVIDE ACCESS PANELS AS REQUIRED.

FIRE PROTECTION SPECIFICATIONS (CONTINUED):

3.4 JOINT CONSTRUCTION

A. GROOVED-END PIPE AND GROOVED-END FITTING JOINTS: USE GROOVED-END FITTINGS AND GROOVED COUPLINGS THAT ARE MADE BY THE SAME MANUFACTURER AND THAT ARE LISTED FOR USE TOGETHER. GROOVE PIPE AND ASSEMBLE JOINTS WITH GROOVED COUPLING, GASKET, LUBRICANT, AND BOLTS ACCORDING TO COUPLING AND FITTING MANUFACTURER'S WRITTEN INSTRUCTIONS.

3.5 PIPING INSTALLATIONS

A. LOCATIONS AND ARRANGEMENTS: DRAWINGS (PLANS, SCHEMATICS, AND DIAGRAMS) INDICATE GENERAL LOCATION AND ARRANGEMENT OF PIPING. INSTALL PIPING AS INDICATED, AS FAR AS PRACTICAL.

1. PLAIN-END FITTINGS WHICH INCORPORATE A LOCKING-LUG, ROTATING RETAINER LUG, OR QUARTER-TURN RETAINER LUG SHALL NOT BE USED.

2. PRESS-FIT FITTINGS SHALL NOT BE USED.

B. INSTALL "INSPECTOR'S TEST CONNECTIONS" IN SPRINKLER PIPING, COMPLETE WITH SHUTOFF VALVE AND SIZED ACCORDING TO NFPA 13. LOCATE IN THE MOST REMOTE LOCATION OF THE SYSTEM.

C. INSTALL SPRINKLER PIPING WITH DRAINS FOR COMPLETE SYSTEM DRAINAGE, PER NFPA 13.

D. INSTALL "INSPECTOR'S TEST CONNECTIONS" IN SPRINKLER PIPING, COMPLETE WITH SHUTOFF VALVE AND SIZED ACCORDING TO NFPA 13. LOCATE IN THE MOST REMOTE LOCATION OF THE SYSTEM.

1. INSTALL HANGER AND SUPPORT SPACING AND LOCATIONS FOR STEEL PIPING JOINED WITH GROOVED MECHANICAL COUPLINGS ACCORDING TO MANUFACTURER'S WRITTEN INSTRUCTIONS FOR RIGID SYSTEMS.

E. ALL PIPING SHALL BE PAINTED BLACK.

3.6 SPRINKLER APPLICATIONS

A. EXPOSED CEILING: 165° TEMPERATURE-RATED, QUICK RESPONSE, BLACK FINISH, UPRIGHT.

3.7 PIPE SLEEVES

A. ALL PIPES PASSING ENTIRELY THROUGH WALLS, FLOORS, ROOFS, AND PARTITIONS SHALL BE PROVIDED WITH SLEEVES. PROVIDE SLEEVES OF SUFFICIENT LENGTH TO PASS THROUGH ENTIRE THICKNESS OF WALLS, FLOORS, ROOFS AND PARTITIONS. PROVIDE ONE INCH MINIMUM CLEARANCE ON ALL SIDES BETWEEN THE EXTERIOR SURFACE OF THE PIPING AND THE INTERIOR WALL OF THE SLEEVE OR CORE-DRILLED HOLE.

B. SLEEVES IN MASONRY AND CONCRETE WALLS, FLOORS AND ROOFS SHALL BE SCHEDULE 40 BLACK STEEL PIPE, SET FLUSH WITH FINISHED FLOORS OR WALLS. CORE DRILLING OF MASONRY AND CONCRETE MAY BE PROVIDED IN LIEU OF PIPE SLEEVES WHEN CAVITIES IN THE CORE-DRILLED HOLE ARE COMPLETELY GROUTED SMOOTH.

C. SLEEVES IN OTHER THAN MASONRY AND CONCRETE WALL, FLOORS AND ROOFS SHALL BE 26 GAUGE GALVANIZED STEEL SHEET, SET FLUSH WITH FINISHED SURFACES.

D. SEAL THE SPACE OF THE SLEEVE OR CORE-DRILLED HOLE WITH UL LISTED FILL, VOID OR CAVITY MATERIAL.

3.8 FIELD QUALITY CONTROL

A. THE FIRE PROTECTION SYSTEMS SHALL BE TESTED WITH WATER TO A HYDROSTATIC PRESSURE OF 200 PSIG. THE PRESSURE SHALL BE MAINTAINED FOR A MINIMUM OF TWO HOURS DURING WHICH TIME THE ENTIRE SYSTEM MUST BE INSPECTED FOR LEAKS OR DEFECTS. IF ANY LEAKS OR DEFECTS ARE IDENTIFIED, THEY SHALL BE REMEDIED IN AN APPROVED MANNER AND THE SYSTEM SHALL BE RETESTED IN THE MANNER SPECIFIED HEREIN.

3.9 COMMISSIONING

A. STARTING PROCEDURES: FOLLOW MANUFACTURER'S WRITTEN PROCEDURES.

3.10 GUARANTEES

A. THE CONTRACTOR SHALL GUARANTEE LABOR, MATERIALS AND EQUIPMENT PROVIDED UNDER THIS CONTRACT AGAINST DEFECTS FOR A PERIOD OF ONE YEAR AFTER THE DATE OF THE FINAL ACCEPTANCE OR AT THE COMPLETION DATE OF ALL PUNCHLIST ITEMS, WHICHEVER OCCURS LAST, USING FACTORY-AUTHORIZED SERVICE REPRESENTATIVES.

B. ADDITIONAL SERVICES: PERFORM SERVICES WITHIN THE TWELVE-MONTH PERIOD NOT CLASSIFIED AS ROUTINE MAINTENANCE OR AS WARRANTY WORK AS DESCRIBED IN SPECIFICATION SECTION “WARRANTIES AND BONDS” WHEN AUTHORIZED IN WRITING. COMPENSATION FOR ADDITIONAL SERVICES MUST BE AGREED UPON IN WRITING PRIOR TO PERFORMING SERVICES.

C. RENEWAL OF MAINTENANCE SERVICE CONTRACT: NO LATER THAN 60 DAYS PRIOR TO THE EXPIRATION OF THE MAINTENANCE SERVICES CONTRACT, DELIVER TO THE OWNER A PROPOSAL TO PROVIDE CONTRACT MAINTENANCE AND REPAIR SERVICES FOR AN ADDITIONAL ONE-YEAR TERM. OWNER SHALL BE UNDER NO OBLIGATION TO ACCEPT MAINTENANCE SERVICE CONTRACT RENEWAL PROPOSAL.

D. SHOULD THE CONTRACTOR FAIL TO COMPLY WITH THE ABOVE REQUIREMENTS, THE OWNER SHALL THEN HAVE THE OPTION TO MAKE THE NECESSARY REPAIRS AND BACK CHARGE THE CONTRACTOR WITHOUT ANY LOSS OF WARRANTY OR GUARANTEE AS PROVIDED BY THE CONTRACT DOCUMENTS.

3.11 RECORD OF COMPLETION AND MAINTENANCE RECORDS, INSPECTION, AND TESTING

A. COMPLETE AND SUBMIT TO THE ENGINEER OF RECORD IN ACCORDANCE WITH NFPA 13.

3.12 AS-BUILTS

A. SUBMIT (3) THREE SETS OF DETAILED "AS-BUILT" DRAWINGS TO THE ENGINEER OF RECORD. THE DRAWINGS SHALL INCLUDE A COMPLETE PIPE LAYOUT SHOWING CONNECTIONS BETWEEN ALL DEVICES AND EQUIPMENT. INCLUDE A RISER DIAGRAM AND DRAWINGS SHOWING THE "AS-BUILT" LOCATION OF ALL DEVICES AND EQUIPMENT. THE FLOOR PLAN DRAWINGS SHALL SHOW THE SYSTEM AS INSTALLED, INCLUDING ALL DEVIATIONS FROM BOTH THE PROJECT DRAWINGS AND THE APPROVED SHOP DRAWINGS. THE DRAWINGS SHALL ALSO INCLUDE ALL INFORMATION AS REQUIRED BY NFPA 13. SUBMIT THE DRAWINGS ON UNIFORM-SIZED SHEETS WITH A MINIMUM SCALE OF 1/8-INCH EQUAL 1 FOOT. SUBMIT THESE DRAWINGS AND ELECTRONIC PDF FILES NOT LESS THAN (30) THIRTY DAYS PRIOR TO FINAL ACCEPTANCE TESTING OF THE ENTIRE SYSTEM. THESE DRAWINGS SHALL BE INCLUDED WITH THE REQUIREMENTS OF THIS SPECIFICATION.

100% SUBMISSION

PMIS/PKG. NO. 209050

NATIONAL PARK SERVICE

Registered Professional Engineer, Fire Protection — CERTIFICATE NO. 50042 JEFFERY P. McBRIDE — State Signed 12/15/2021 — ARIZONA U.S.A.

FP FIRM

EBL ENGINEERS ESTABLISHED 1972
Mechanical - Electrical - Fire Protection
8005 Harford Road
Baltimore, Maryland 21234-5701
Tel. (410) 882-6000
E-mail: ebl@eblengineers.com

Mark	REVISION	Date	Issued by
-	-	-	-

FIRE PROTECTION SPECIFICATIONS
TITLE OF SHEET

FP2
SUB SHEET NO.

UNITED STATES
DEPARTMENT OF THE INTERIOR
NATIONAL PARK SERVICE - INTERIOR REGION 8
DESIGN AND PROJECT MANAGEMENT

INSTALL FIRE SUPPRESSION AT DELLENBAUGH CABIN ADMIN SITE
TITLE OF PROJECT
GRAND CANYON PARASHANT, NATIONAL MONUMENT, ARIZONA
LOCATION WITHIN PARK
INSTALL FIRE SUPPRESSION AT DELLENBAUGH CABIN ADMIN SITE
TITLE OF PROJECT

DESIGNED JPM
DRAWN EBL
CHECKED JPM
DWG. NO.: XX XXXXXX
DATE: 08/02/2024
SHEET 14 OF 18

FIRE PROTECTION SPECIFICATIONS (CONTINUED):

3.13 OPERATION AND MAINTENANCE MANUAL

A. THE FIRE SPRINKLER INSTALLER SHALL PROVIDE THE OWNER WITH THREE COMPLETE MANUALS. THE MANUALS SHALL BE IN LOOSE-LEAF 3-RING BINDER FORMAT AND GROUPED/TABBED BY SECTION. THE SECTIONS SHALL BE DIVIDED AS FOLLOWS:

1. COMPLETE SET OF "HARD-COPY" "AS-BUILT" DRAWINGS (APPROVED SHOP DRAWINGS UPDATED TO "AS-BUILT" CONDITIONS).
2. COMPLETE SET OF "AS-BUILT" DRAWINGS ON CD DISK IN DXF AND PDF FORMATS.
3. COMPREHENSIVE OPERATION DESCRIPTION OF ALL SYSTEMS. INDICATE HOW THE SYSTEM SHALL ACTIVATE AND PERFORM AS DESIGNED AND INSTALLED.
4. NAMES, ADDRESSES, AND TELEPHONE NUMBERS OF ALL SUPPLIERS OF THE EQUIPMENT AND SYSTEMS.
5. GUARANTEES ON ALL EQUIPMENT.
6. COMPREHENSIVE PREVENTIVE MAINTENANCE, SERVICE & PROGRAMMING INSTRUCTIONS FOR ALL SYSTEMS. INCLUDE SCHEMATIC DIAGRAMS OF ALL EQUIPMENT AND MODULES INSTALLED.
7. SPARE PARTS LIST OF ALL SYSTEMS COMPONENTS.
8. COPIES OF LETTERS, INSPECTIONS, REPORTS, CERTIFICATE OF COMPLIANCE, ETC. SHOWING ALL APPROVALS FROM THE LOCAL AND STATE AUTHORITIES, ETC.
9. ENGINEERING DESCRIPTION AND DATA SHEETS OF ALL EQUIPMENT. INCLUDE A TABLE OF CONTENTS LISTING ALL SYSTEM COMPONENTS.
10. COPIES OF ALL APPROVED SHOP DRAWINGS AND SUBMITTAL MATERIALS (UPDATED TO "AS-BUILTS").
11. COPIES OF ALL PRETESTING LETTERS.

B. EACH MANUAL SHALL BE TYPEWRITTEN AND BOUND UNDER ONE HARD COVER. THE MANUALS SHALL BE CLEARLY AND PERMANENTLY IDENTIFIED ON THE COVER WITH THE NAME AND DATE OF THE PROJECT. THE LARGE SHEETS OF DRAWINGS SHALL BE FOLDED AND PLACED IN PROTECTIVE CLEAR PLASTIC LOOSE-LEAF DRAWING FOLDERS.

C. PROVIDE ELECTRONIC PDF FILE OF THE COMPLETE OPERATION AND MAINTENANCE MANUAL.

END OF SECTION 211313

100% SUBMISSION

PMIS/PKG. NO. 209050

NATIONAL PARK SERVICE

Registered Professional Engineer (Fire Protection) CERTIFICATE NO. 50042 JEFFERY P. McBRIDE DATE SIGNED 12/15/2023 ARIZONA U.S.A.

FP FIRM

EBL ENGINEERS ESTABLISHED 1972

Mechanical - Electrical - Fire Protection

8005 Harford Road
Baltimore, Maryland 21234-5701
Tel: (410) 668-8000
E-mail: ebl@eblengineers.com

Mark	REVISION	Date	Issued by
-	-	-	-

FIRE PROTECTION SPECIFICATIONS

TITLE OF SHEET

FP3

SUB SHEET NO.

UNITED STATES
DEPARTMENT OF THE INTERIOR
NATIONAL PARK SERVICE - INTERIOR REGION 8
DESIGN AND PROJECT MANAGEMENT

INSTALL FIRE SUPPRESSION AT DELLENBAUGH CABIN ADMIN SITE
TITLE OF PROJECT

GRAND CANYON PARASHANT, NATIONAL MONUMENT, ARIZONA
LOCATION WITHIN PARK

INSTALL FIRE SUPPRESSION AT DELLENBAUGH CABIN ADMIN SITE
TITLE OF PROJECT

JPM
DESIGNED
EBL
DRAWN
JPM
CHECKED
DWG. NO: XX
XXXXXX
DATE: 08/02/2024
SHEET 15 OF 18

GENERAL NOTES:

1. FOR FIRE PROTECTION LEGEND, GENERAL NOTES, AND DETAILS, SEE SHEETS FP1 AND FP2.

DRAWING NOTES:

(APPLIES TO THIS SHEET ONLY)

1. NEW 2.5-INCH UNDERGROUND WATER LINE. REFER TO MECHANICAL PLANS FOR FURTHER INFORMATION.
2. EXISTING WOODEN FENCE MAY BE REMOVED DURING CONSTRUCTION. FENCE SHALL BE SAFELY STORED AND REINSTALLED AFTER COMPLETION OF CONSTRUCTION.
3. EXISTING SIDEWALK. ENSURE THAT SIDEWALK IS PROTECTED FROM DAMAGE DURING CONSTRUCTION.

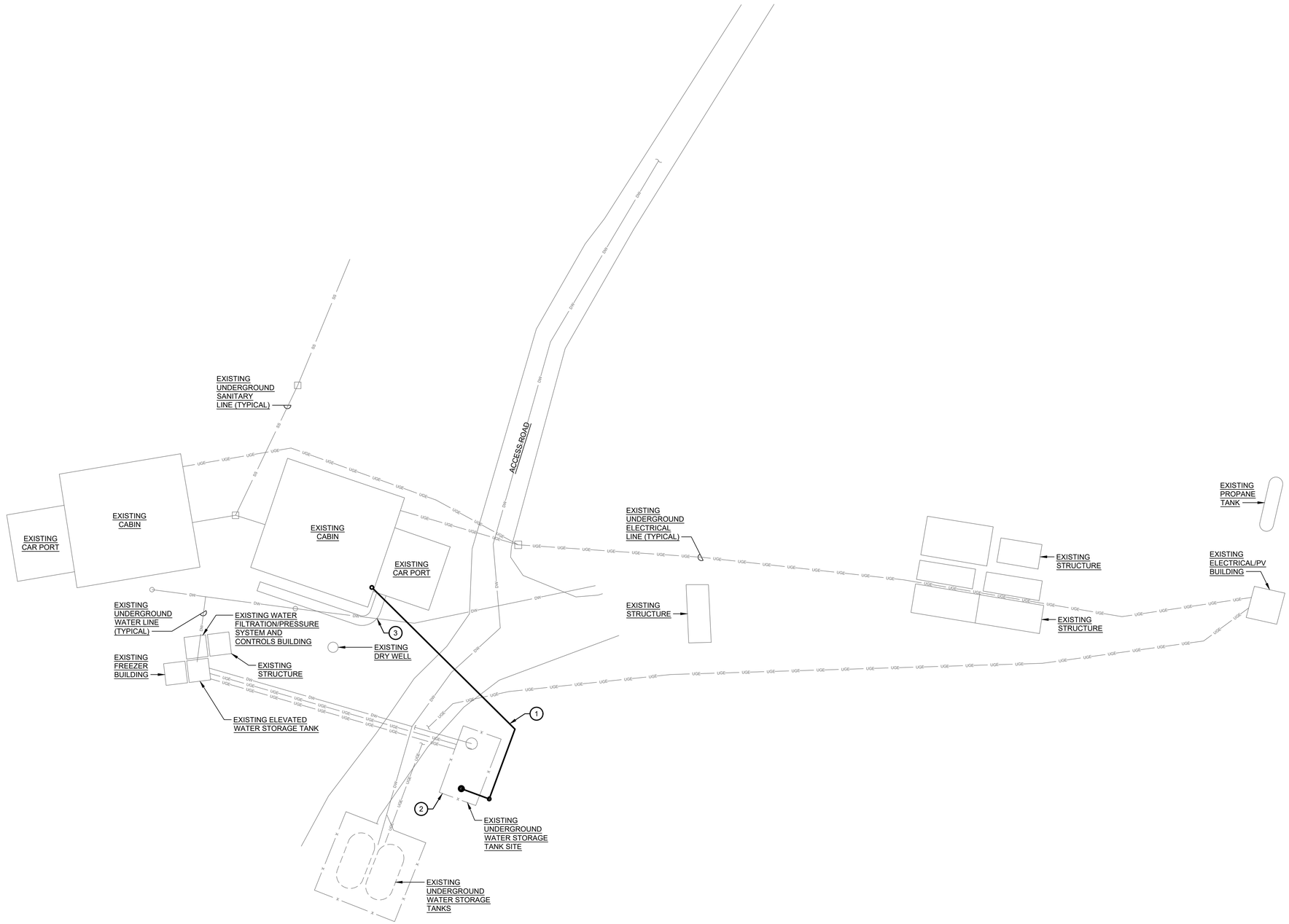

SITE PLAN - FIRE PROTECTION

SCALE: APPROX. 1"=20'-0"

CAUTION:
IF THIS PLAN IS A REDUCTION, GRAPHIC SCALES MUST BE USED.

GRAPHIC SCALE

1"=20'-0"

0 10' 20' 40' 60'

100% SUBMISSION

PMIS/PKG. NO. 209050

NATIONAL PARK SERVICE

Registered Professional Engineer, Fire Protection — CERTIFICATE NO. 50042 — JEFFERY P. McBRIDE — DATE SIGNED 12/11/2024 — ARIZONA U.S.A.

FP FIRM

EBL ENGINEERS ESTABLISHED 1972

Mechanical - Electrical - Fire Protection

8005 Harford Road
Baltimore, Maryland 21234-5701
Tel: (410) 668-8000
E-mail: ebl@eblengineers.com

Mark	REVISION	Date	Issued by
-	-	-	-

SITE PLAN - FIRE PROTECTION
TITLE OF SHEET

FP4
SUB SHEET NO.

UNITED STATES
DEPARTMENT OF THE INTERIOR
NATIONAL PARK SERVICE - INTERIOR REGION 8
DESIGN AND PROJECT MANAGEMENT

INSTALL FIRE SUPPRESSION AT DELLENBAUGH CABIN ADMIN SITE
TITLE OF PROJECT

GRAND CANYON PARASHANT, NATIONAL MONUMENT, ARIZONA
LOCATION WITHIN PARK

INSTALL FIRE SUPPRESSION AT DELLENBAUGH CABIN ADMIN SITE
TITLE OF PROJECT

DESIGNED: JPM
DRAWN: EBL
CHECKED: JPM
DWG. NO.: XX XXXXXX
DATE: 08/02/2024
SHEET 16 OF 18

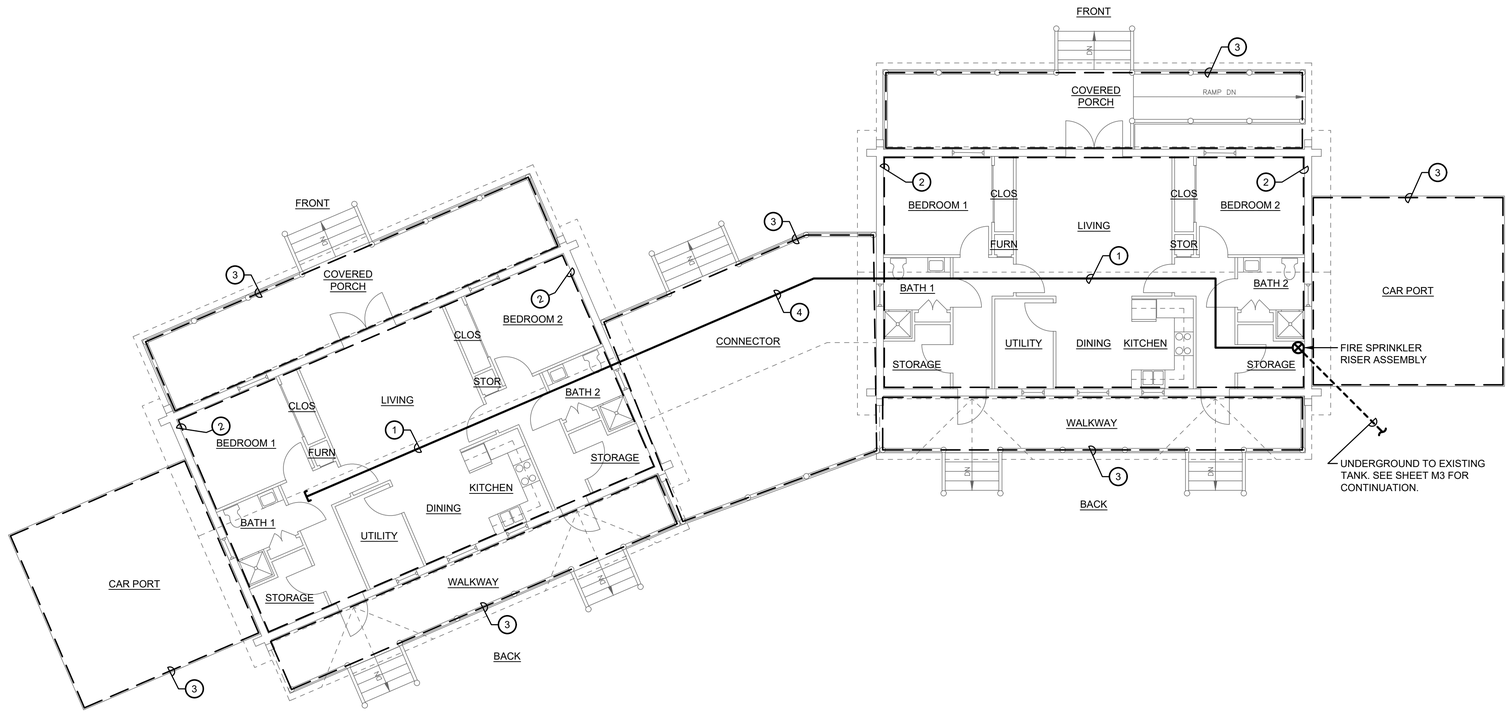

CABIN FLOOR PLANS - FIRE PROTECTION

SCALE: 1/8"=1'-0"

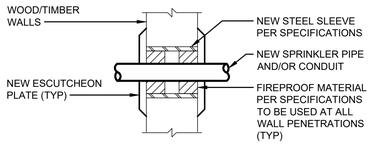

WALL PIPE PENETRATION DETAIL

NO SCALE

NOTES:

1. TYP AT ALL FIRE RATED WALL PENETRATIONS.
2. ALL SLEEVES USING FIRESTOPPING MATERIAL SHALL BE SEALED TO EQUAL OR EXCEED THE RATING OF THE ASSEMBLY BEING PENETRATED.
3. REPAIR EX FLOOR TO MATCH EX CONDITIONS.
4. WALLS ARE 8" DIAMETER TIMBER FRAMING. DRILLED PENETRATIONS SHALL BE LOCATED AS NEAR AS POSSIBLE TO CENTER OF TIMBER LOGS.
5. COORDINATE WITH OWNER (NPS) FOR POSITIONING AND FINAL FINISH FOR ALL PENETRATIONS.

GENERAL NOTES:

1. FOR FIRE PROTECTION LEGEND, ABBREVIATIONS, AND GENERAL NOTES, SEE SHEET FP1.

DRAWING NOTES:

(APPLIES TO THIS SHEET ONLY)

1. PROVIDE CROSS MAIN FROM RISER ROOM TO ADJACENT CABIN FOR SPRINKLER SUPPLY,
2. PROVIDE FIRE SPRINKLER COVERAGE THROUGHOUT INTERIOR CABIN SPACES UTILIZING EXPOSED BLACK STEEL PIPING. SEE DESIGN CRITERIA ON SHEET FP1.
3. PROVIDE FIRE SPRINKLER COVERAGE TO EXTERIOR COVERED WALKWAYS, CARPORTS, AND COVERED BUILDING CONNECTOR. SEE DESIGN CRITERIA ON SHEET FP1.
4. COORDINATE ROUTING OF CROSS MAIN BETWEEN CABINS WITH OWNER (NPS).

CAUTION:

IF THIS PLAN IS A REDUCTION, GRAPHIC SCALES MUST BE USED.

GRAPHIC SCALE

1/8"=1'-0"

0 4' 8' 16' 24'

100% SUBMISSION

PMIS/PKG. NO. 209050

NATIONAL PARK SERVICE

Registered Professional Engineer, Fire Protection — CERTIFICATE NO. 50042 JEFFERY P. McBRIDE — DATE SIGNED 12/15/2023 — ARIZONA U.S.A.

FP FIRM

EBL ENGINEERS ESTABLISHED 1972

Mechanical - Electrical - Fire Protection

8005 Harford Road
Baltimore, Maryland 21234-5701
Tel. (410) 668-8000
E-mail: ebl@eblengineers.com

Mark	REVISION	Date	Issued by
-	-	-	-

CABIN FLOOR PLANS - FIRE PROTECTION

TITLE OF SHEET

FP5

SUB SHEET NO.

UNITED STATES
DEPARTMENT OF THE INTERIOR
NATIONAL PARK SERVICE - INTERIOR REGION 8
DESIGN AND PROJECT MANAGEMENT

INSTALL FIRE SUPPRESSION AT DELLENBAUGH CABIN ADMIN SITE
TITLE OF PROJECT

GRAND CANYON PARASHANT, NATIONAL MONUMENT, ARIZONA
LOCATION WITHIN PARK

INSTALL FIRE SUPPRESSION AT DELLENBAUGH CABIN ADMIN SITE
TITLE OF PROJECT

DESIGNED JPM
DRAWN EBL
CHECKED JPM
DWG. NO: XX XXXXXX
DATE: 08/02/2024
SHEET 17 OF 18

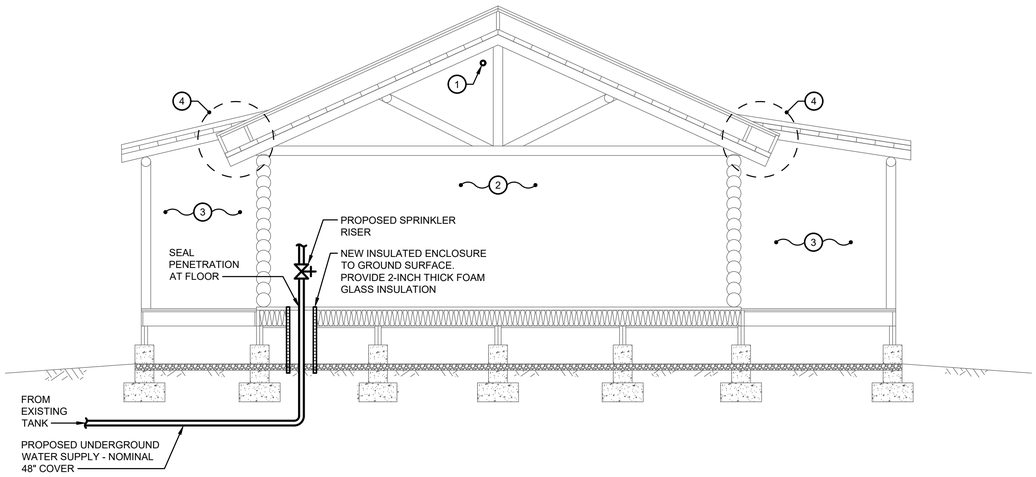

CABIN SECTION - FIRE PROTECTION

SCALE: 1/4"=1'-0"

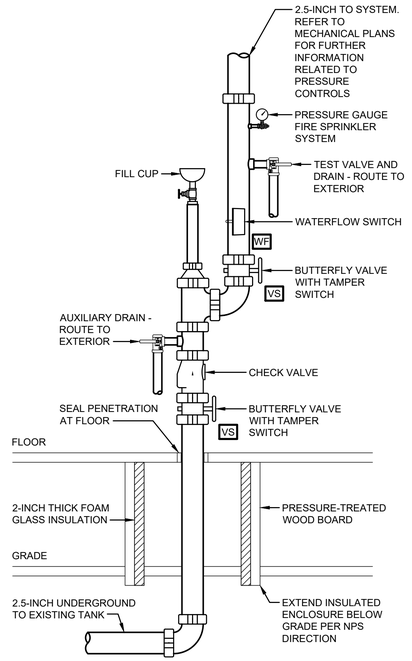

ANTIFREEZE SYSTEM RISER DETAIL

NO SCALE

NOTES:

1. COORDINATE CONSTRUCTION OF INSULATED ENCLOSURE BELOW CABIN FLOOR WITH OWNER (NPS).
2. COORDINATE RISER ASSEMBLY POSITION WITHIN EXISTING STORAGE CLOSET WITH OWNER (NPS).
3. COORDINATE ROUTING AND DISCHARGE OF DRAINS WITH OWNER (NPS).
4. SEE MECHANICAL PLANS FOR ADDITIONAL WINTERIZATION DETAILS AT RISER.

GENERAL NOTES:

1. FOR FIRE PROTECTION LEGEND, ABBREVIATIONS, AND GENERAL NOTES, SEE SHEET FP1.

DRAWING NOTES:

(APPLIES TO THIS SHEET ONLY)

1. PROVIDE CROSS MAIN FROM RISER ROOM TO ADJACENT CABIN FOR SPRINKLER SUPPLY,
2. PROVIDE FIRE SPRINKLER COVERAGE THROUGHOUT INTERIOR CABIN SPACES UTILIZING EXPOSED BLACK STEEL PIPING. SEE DESIGN CRITERIA ON SHEET FP1.
3. PROVIDE FIRE SPRINKLER COVERAGE TO EXTERIOR COVERED WALKWAYS, CARPORTS, AND COVERED BUILDING CONNECTOR. SEE DESIGN CRITERIA ON SHEET FP1.
4. COORDINATE METHOD AND POSITION OF PENETRATIONS FROM CABIN INTERIOR TO EXTERIOR WALKWAYS FOR FIRE SPRINKLER PROTECTION.

CAUTION:

IF THIS PLAN IS A REDUCTION, GRAPHIC SCALES MUST BE USED.

GRAPHIC SCALE

1/4"=1'-0"

0 2' 4' 8' 12'

100% SUBMISSION

PMIS/PKG. NO. 209050

NATIONAL PARK SERVICE

Registered Professional Engineer, Fire Protection CERTIFICATE NO. 50042 JEFFERY P. McBRIDE DATE SIGNED 12/17/2024 ARIZONA U.S.A.

FP FIRM

EBL ENGINEERS ESTABLISHED 1972

Mechanical - Electrical - Fire Protection

8005 Harford Road
Baltimore, Maryland 21234-5701
Tel: (410) 668-6000
E-mail: ebl@eblengineers.com

Mark	REVISION	Date	Issued by
-	-	-	-

CABIN SECTION - FIRE PROTECTION

TITLE OF SHEET

FP6

SUB SHEET NO.

UNITED STATES
DEPARTMENT OF THE INTERIOR
NATIONAL PARK SERVICE - INTERIOR REGION 8
DESIGN AND PROJECT MANAGEMENT

INSTALL FIRE SUPPRESSION AT DELLENBAUGH CABIN ADMIN SITE
TITLE OF PROJECT

GRAND CANYON PARASHANT, NATIONAL MONUMENT, ARIZONA
LOCATION WITHIN PARK

INSTALL FIRE SUPPRESSION AT DELLENBAUGH CABIN ADMIN SITE
TITLE OF PROJECT

JPM DESIGNED
EBL DRAWN
JPM CHECKED
DWG. NO: XX XXXXXX
DATE: 08/02/2024
SHEET 18 OF 18