6700

Addressable Fire Alarm Control Panel

The 6700 is an addressable fire alarm control panel (FACP) that is a direct replacment for the 5700 FACP. The 6700 can be configured to achieve a point capacity of up to 100 points. It has one built-in signaling line circuit (SLC), which can support 50 System Sensor® (SK) sensors and 50 SK modules or 50 Hochiki® (SD) devices.

A common communications and annunciation link allows up to 17 panels to be connected via copper or fiber optic cable. A designated panel is configured as the communicator for all panels in the link for convenient single-point communications. The 6700 also has a built-in, dual-line POTS and IP communicator with additional cellular options available.

The 6700 system can be enhanced by adding modules such as the 6860 remote annunciator which also has four programmable function buttons to help automate tasks and reduce time spent at the panel.

SWIFT® wireless compatibility provides options for wireless detection through a Class A mesh network. It is ideal for hard-to-wire locations, buildings where new wiring is not allowed, or to provide an easy install fire system for new construction projects. SWIFT devices can be combined with other hard-wired 6700 compatible devices. SWIFT is only compatible with System Sensor (SK) devices. It is not compatible with Hochiki (SD) devices.

The 6700 also has a form-C trouble relay, two programmable form-C relays, along with powerful features such as drift compensation, pre-trouble maintenance alert, a built-in sensor test to comply with NFPA 72 calibration testing requirements, and calibration trouble alert.

6700

The 6700 supports a variety of devices, including the 6860, 5860, and 6855 remote annunciators, 5824 serial parallel printer interface module (for printing system reports), the 5496 NAC expander, 5895XL power module, and SK or SD devices.

FEATURES & BENEFITS

- Capable of providing up to 100 points to satisfy smaller installation needs
- Connect up to 17 panels on one site with convenient single-point access using the SK-NIC Network Interface Card. Connected panels can have mixed compatible FACP models
- Convenient field-upgradeable firmware
- Built-in dual path POTS and IP communications with optional cellular models available for reliable backup reporting
- 6860 annunciator with a 4 x 40 large display
- Four user-programmable buttons minimize time spent executing complex or routine tasks
- Built-in USB interface for convenient and quick programming
- Programmable date setting for automatic and convenient Daylight Saving Time changes
- JumpStart® auto programming reduces installation time
- 125 software zones and 125 output groups for flexible design options

SIGNAL LINE CIRCUIT (SLC)

The 6700 SLC loops support multiple device types, maintenance alerts, and a built-in sensor test to comply with NFPA 72 calibration testing requirements.

INDICATOR LIGHTS

- **General Alarm (Red)**: Flashes if in alarm; solid when alarm is silenced
- **Supervisory (Yellow):** Flashes if a supervisory condition exists; solid when supervisory is silenced
- **System Trouble (Yellow)**: Flashes if a trouble condition exists; solid when trouble is silenced
- **System Silenced (Yellow)**: On when an alarm, trouble or supervisory condition has been silenced but not yet cleared
- **System Power (Green):** Flashes for AC failure; solid when power systems are normal

USER INTERFACE

The 6700 built-in 4 x 20 annunciator with 80 character LCD display and large easy-to-use tactile touchpad can be used for system operation, programming and maintenance. It has five LEDs for alarm, supervisory, system trouble, system silenced and system power.

System operations include silencing alarms and troubles, resetting alarms and the display of alarm troubles and memory. The system's non-volatile event history buffer stores 1,000 events for viewing from the built-in or remote annunciator. System operations can be initiated with a mechanical firefighter's key or a valid 4- to 7-digit operator's code.

PROGRAMMING

The 6700 system offers several options to simplify and speed-up programming. JumpStart® auto programming minimizes programming required to start a new system. The built-in keypad, or the 6860, 5860 or 6855 remote annunciators give you on-site access to current system programming. Programming can also be accomplished using the Windows®-based Honeywell Fire Software Suite (HFSS) program.

SOFTWARE TOOLS

SKST: Silent Knight Selection Tool provides the installer or design architect with a Windows® software system configuration tool to create a detailed Bill of Material (BOM) and battery calculations.

HFSS: Honeywell Fire Software Suite provides communication and panel programming, detector status, event history and additional data. Requires a PC running Microsoft® Windows®.

ADDITIONAL INFORMATION

Twisted-unshielded pair wire is recommended. The 6700 also has 13 preset notification cadence patterns (including ANSI 3.41).

AGENCY LISTINGS AND APPROVALS

NPFA 13, NFPA 15, NFPA 16, NFPA 70, NFPA 72: Central station; remote Signaling; Local Protective Signaling Systems; Auxiliary Protected Premises Unit; Water Deluge releasing service. Suitable for automatic, manual, waterflow, sprinkler supervisory (DACT non-coded) signaling services

- **UL Listed:** S2766
- **CSFM** 7165-0559:0501
- **FDNY** COA# 6250

ORDERING INFORMATION

6700: Addressable Fire Alarm Control Panel. (Red cabinet)

COMPATIBLE ANNUNCIATORS

6860: 4x40 LCD remote fire annunciator (4 lines and up to 160 characters) per system; four programmable buttons

5860: 4x20 LCD remote fire annunciator. 5860 is gray; 5860R is red

6855: 4x20 LCD remote fire annunciator

5865-3 or 5865-4: LED annunciators can display up to 30 LEDs (15 red and 15 yellow). The 5865-4 has key switches for silence and reset, and a system trouble LED.

5880: The 5880 LED / IO module has 40 programmable LED outputs and eight supervised dry contact inputs which are useful for custom applications. You can use up to eight 5880 modules on one control panel for maximum flexibility. Its compact size allows mounting inside the annunciator, or in an accessory cabinet.

6700 COMPATIBLE DEVICES AND ACCESSORIES

See the data sheets listed below for a complete listing of the SK, SD or SWIFT devices.
53623: SK Devices Data Sheet
53624: SD Devices Data Sheet
350614, 350616 & 350618: SWIFT wireless devices
For a complete and current listing of compatible devices and accessories, visit **www.silentknight.com**

Important: You cannot mix SK and SD devices in the same fire alarm system.

SK COMPATIBLE ADDRESSABLE DEVICES

SK-ACCLIMATE: Multi criteria photoelectric smoke detector with thermal 135°F fixed temperature

SK-BEAM: Reflected beam smoke detector without test feature

SK-BEAM-T: Reflected beam smoke detector with test feature

SK-CONTROL: Supervised control module

SK-CONTROL-6: Six circuit supervised control module

SK-DUCT: Photoelectric duct smoke detector with extended air speed range

SK-FIRE-CO: Four criteria fire and carbon monoxide detector

SK-HEAT: Fixed thermal detector (135°F)

SK-HEAT-W: Fixed thermal detector (135°F), white

SK-HEAT-ROR: Fixed rate of rise detector (135°F)

SK-HEAT-ROR-W: Fixed rate of rise detector (135°F), white

SK-HEAT-HT: Fixed high temperature thermal detector (190°F)

SK-HEAT-HT-W: Fixed high temperature thermal detector (190°F), white

SK-ISO: Fault isolator module

SK-MINIMON: Mini monitor module

SK-MONITOR: Monitor module

SK-MONITOR-2: Dual input monitor module

SK-MON-10: 10 input monitor module

SK-PHOTO: Photoelectric smoke detector

SK-PHOTO-W: Photoelectric smoke detector, white

SK-PHOTO-T: Photoelectric smoke detector with thermal (135°F fixed temperature)

SK-PHOTO-T-W: Photoelectric smoke detector with thermal (135°F fixed temperature), white

SK-PHOTOR: Photoelectric detector with remote test capability

SK-PHOTO-R-W: Photoelectric detector with remote test capability, white

SK-PULL-SA: Addressable single action pull station

SK-PULL-DA: Addressable dual action pull station

SK-RELAY: Addressable relay module

SK-RELAY-6: Addressable Six relay control module

SK-RELAYMON-2: Addressable Dual relay/ monitor module

SK-ZONE: Addressable zone interface module

SK-ZONE-6: Six zone interface module

B300-6(-IV): 6" base for SK-W Series

B210LP: 6" mounting base

B501(-BL,-IV,-WHITE): 4"flangeless base

B501: 4" Flangeless mounting base

B200S(-IV,-WH): Intelligent sounder base

B200S: Intelligent sounder base

B200S-LF(-IV,-WH): Low-Frequency intelligent sounder base

B200S-LF: Low-frequency intelligent sounder base

B224RB(-IV,-WH): Relay base

B224RB: Relay base

B224BI(-IV,-WH): Isolator base

B224BI: Isolator base

SD COMPATIBLE ADDRESSABLE DEVICES

SD505-6AB: Addressable 6" base

SD505-6IB: Addressable 6" short circuit isolator base

SD505-6RB: Addressable 6" relay base

SD505-6SB: Addressable 6" sounder base

SD500-AIM: Addressable input module (switch input)

SD500-ANM: Addressable notification module

SD500-ARM: Addressable relay module

SD505-DTS-K: Remote test switch and LED indicator for the SD505-DUCTR

SD505-DUCT: Addressable Duct Smoke Detector.

SD505-DUCTR: Addressable Duct Detector housing with relay base.

SD505-HEAT: Absolute temperature heat detector. Trip point range from 135°F–150°F (0°C–37°C).

SD500-LIM: Addressable Line isolator module

SD500-MIM: Addressable Mini input monitor module (switch input)

SD505-PHOTO: Photoelectric smoke detector

SD500-PS/-PSDA: Addressable Single or dual action pull station

SD500-SDM: Addressable smoke detector module

AUDIBLE/VISIBLE DEVICES

These AV devices are all 2-wire. Color: "R" indicates red; "W" denotes white. For a complete listing of Silent Knight AV devices go to **www.silentknight.com**.

CHSRL/CHSWL: Wall chime/strobe

CHSCRL/CHSCWL: Ceiling chime/strobe

CHRL/CHWL: Wall chime

HRL/HWL: Wall horn

P2RL/P2WL: Wall horn/strobe

PC2RL/PC2WL: Ceiling horn/strobe

SRL/SWL: Wall strobe

SCRL/SCWL: Ceiling strobe

SPSCRL/SPSCWL: Ceiling speaker/strobe

SPSRL/SPSWL: Wall speaker/strobe

SPRL/SPWL: Wall speaker

SPCRL/SPCWL: Ceiling speaker

SWIFT WIRELESS DEVICES

SWIFT is only compatible with System Sensor (SK) devices. It is not compatible with Hochiki (SD) devices.

WSK-WGI: Wireless Gateway

WSK-PHOTO: Wireless Photoelectric smoke detector

WSK-PHOTO-T: Wireless Multi-criteria photoelectric smoke detector with thermal detection (135°F fixed temperature) and B510W 4" base

WSK-HEAT: Wireless Heat, (135°F fixed temperature) and B510W 4" base

WSK-HEAT-ROR: Wireless heat, ROR (135°F fixed temperature) and B510W 4" base

WSK-MONITOR: Wireless monitor module

WSK-RELAY: Wireless relay module

W-USB: SWIFT Tools USB transceiver used for communication with SWIFT devices

SBUS ACCESSORIES

5496: A 6 amp notification power expander with four power-limited notification appliance circuit outputs.

5883: Relay interface. Provides 10 Form C relays.

5824: Serial/Parallel printer interface module for printer connection.

5895XL: Power supply with six Flexput® circuits, and two Form C relays. Max. 16 per system.

5815RMK: Remote mounting kit. Dimensions 10 3/8"W x 10-3/16"H x 3"D

COMMUNICATION OPTIONS

CELL-CAB-SK: Cellular communicator, metal enclosure with lock/key*

CELL-MOD: Cellular communicator, plastic enclosure*

*Sole path, powered by panel.

IPGSM-4G: Dual path fire alarm communicator, cellular and/or IP (primary or backup, selectable)

SK-IP-2: Remote reporting via the Internet. Requires a VisorAlarm® receiver at the central station

MISC. ACCESSORIES

SK-NIC: Network Interface Card. Provides a common communications link for the 6700

SK-NIC-KIT: Installation Accessory Kit

SK-FML: Fiber-Optic Multi Mode, transmitter and receiver

SK-FSL: Fiber-Optic Single Mode

RBB: Remote battery box accessory cabinet for batteries that are too large to fit in the FACP cabinet. Dimensions: 16" W x 10" H x 6" D (406mm W x 254mm H x 152mm D).

SK-SCK: Seismic Compliance Kit used to securely fasten batteries to the fire panel.

6700 Technical Specifications

PHYSICAL

Overall Dimensions: 12.71" W x 15.12" H x 3.33" D
Weight: 15 lbs.
Color: Red

ENVIRONMENTAL

Operating Temperature: 32°F to 120°F (0°C to 49°C)
Humidity: 0 to 93% relative humidity (non-condensing)

ELECTRICAL

6700 Primary AC: 120 VAC @ 60 Hz, 1.5A Total Accessory Load: 2.5A @ 27.4 VDC power-limited
Standby Current: 165mA
Alarm Current: 310mA
Battery Charging Capacity: 7 to 35AH
Battery Size: 7AH max. allowed in control panel cabinet. Larger capacity batteries can be housed in RBB accessory cabinet.

NOTIFICATION APPLIANCE CIRCUITS (NACs)

Two programmable circuits which can be programmed individually as:
NACs: 2.5A @ 27.4VDC per circuit, power-limited (with a panel maximum current of 2.5A)
Auxiliary Power Circuits: 2.5A @ 27.4VDC per circuit, power-limited

Supports Class B (Style 4) and Class A (Style 6 or 7) configuration for the SLC

WIRING: See the product manual for wiring details

Flexput®, Honeywell®, JumpStart®, Silent Knight®, SWIFT®, and System Sensor® are registered trademarks of Honeywell International Inc.

Hochiki® is a registered trademark of Hochiki Corporation. Microsoft® and Windows® are registered trademarks of Microsoft Corporation.

This document is not intended to be used for installation purposes. We try to keep our product information up-to date and accurate. We cannot cover all specific applications or anticipate all requirements. All specifications are subject to change without notice.

For Technical Support, call 800-446-6444.

Honeywell Silent Knight
12 Clintonville Road
Northford, CT 06472
800-328-0103
www.silentknight.com

351607 | B | 09/18
© 2018 Honeywell International Inc.

5860

Remote Annunciator

The 5860 remote annunciator, can be used to operate and program Honeywell Silent Knight fire alarm control panels (FACPs) from anywhere within the system.

The 5860 features include an 80-character backlit LCD providing easy-to understand system messages. The annunciator is ergonomically designed with over-sized buttons for the most frequently used features, like Reset and Silence.

In addition to status messages displayed on the LCD, there are five LEDs for alarm, supervisory, trouble, silence, and AC power status.

The 5860 annunciator is available in gray to match virtually any decor and red for applications where the annunciator must stand out. The annunciator enclosure can be surface or flush mounted. A trim ring kit is available for surface mounting.

5860 / 5860R

COMPATIBILITY

The 5860 is compatible with the following Honeywell Silent Knight FACPs:

6820: Addressable fire alarm control panel with up to 1,110 addressable points

6820EVS: Addressable fire alarm control panel with an emergency communication systems and up to 1,110 addressable points

6808: Addressable fire alarm control panel with up to 198 addressable points

6700: Addressable fire alarm control panel with up to 100 addressable points

5820XL: Addressable fire alarm control panel

5820XL-EVS: Addressable fire alarm control panel with an emergency communication systems

5808: Addressable fire alarm control panel

5700: Addressable fire alarm control panel

FEATURES & BENEFITS

- 80-character backlit LCD display (4 lines with 20 characters per line)
- Tactile / audible feedback when a key is pressed on the annunciator
- Uses the RS-485 SBUS to interface with the panel
- Support for simultaneous use of multiple 5860s
- Easily view current status by alarms, supervisories, or troubles
- Five Status LEDs
- Available in red or light gray color
- Accommodates wiring lengths up to 6000 ft. from the control panel for added design and install flexibility
- Accepts user codes or fire fighter's key
- Larger keypad buttons makes it easier to maneuver for system reset and silencing

5860 Technical Specifications

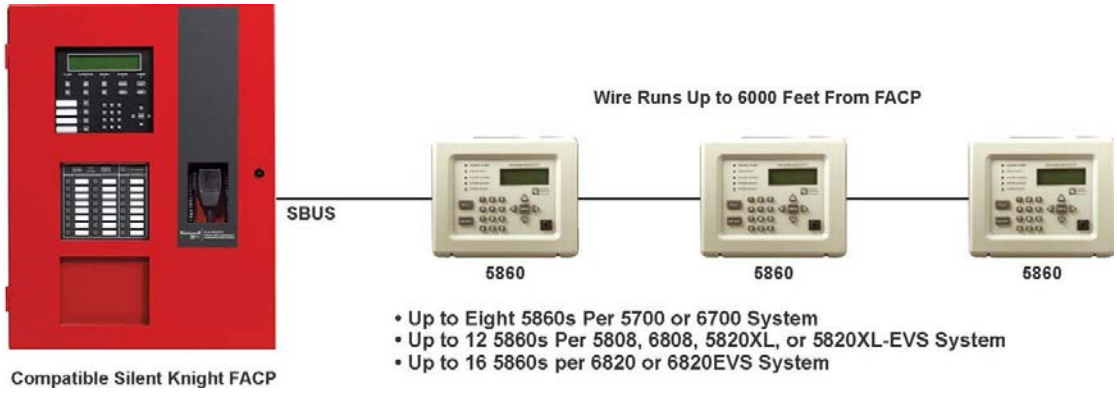

5860 Features

PHYSICAL

Dimensions: 9.1"W x 7.4"H x 1.5"D (23.1W x 18.8H x 3.8D cm)
Shipping Weight: 2.8 lbs (1.3 kg)
Color: 5860R: Red; 5860: Gray

ENVIRONMENTAL

Operating Temperature: 32°F to 120°F (0°C to 49°C)
Humidity: 10% - 93% non-condensing)

ELECTRICAL

Operating Voltage: 24VDC
Standby Current: 20mA
Alarm Current: 25mA

ORDERING INFORMATION

5860: Remote Annunciator, four line (4x20) LCD annunciator with 20 characters per line. Gray
5860R: Remote Annunciator, four line (4x20) LCD annunciator with 20 characters per line. Red

ACCESSORIES

5860TR: Red Trim Ring for surface mounting
5860TG: Gray Trim Ring for surface mounting

AGENCY LISTINGS AND APPROVALS

UL listed
CSFM approved
Meets NFPA 72 requirements
FM approved
MEA approved

For a complete listing of all compliance approvals and certifications, please visit www.silentknight.com.

Microsoft, Windows, and the Windows Logo are registered trademarks or trademarks of Microsoft Corporation.

Silent Knight® and Honeywell® are registered trademarks of Honeywell International, Inc.

This document is not intended to be used for installation purposes. We try to keep our product information up-to date and accurate. We cannot cover all specific applications or anticipate all requirements. All specifications are subject to change without notice.

For Technical Support, call 800-446-6444.

For more information

Learn more about Honeywell Silent Knight and other products by visiting www.silentknight.com

Honeywell Silent Knight
12 Clintonville Road
Northford, CT 06472
800-328-0103

Doc 350224 | Rev J | 12/17
© 2017 Honeywell International Inc.

5496

Intelligent Power Module

The 5496 intelligent power module is the most cost-effective power supply available today. It delivers 6 amps of notification appliance circuit power and built-in synchronization for appliances from System Sensor®,Gentex®, AMSECO, and Wheelock®. The 5496's advanced microprocessor design is years ahead of the competition. Its switch mode power supply design is up to 50% more efficient than competitive linear mode power supplies.

The 5496 is a 6 amp notification power expander that provides its own AC power connection, battery charging circuit, and backup battery for use with the Honeywell Silent Knight series fire alarm control panels (FACPs). The 5496 is the cost-effective solution for powering notification appliances required by the Americans with Disabilities Act (ADA). The 5496 has built-in ANSI cadence pattern. The output circuits can be programmed as notification appliance circuits, or as auxiliary power (configurable for constant, resettable, or door holder power).

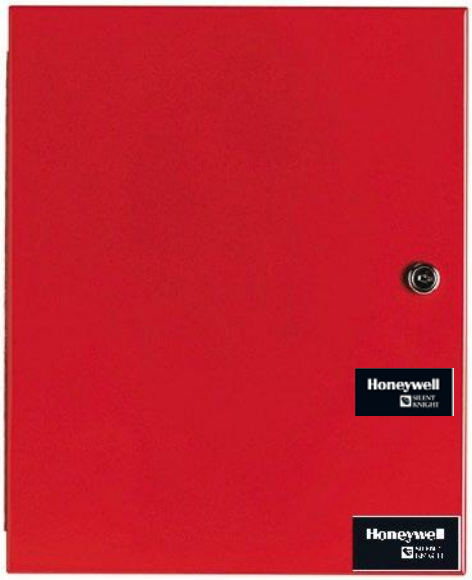

5496

Compatibility

The 5496 is compatible with the following Honeywell Silent Knight FACPs:

- 6820 / 6820EVS
- 5820XL / 5820XL-EVS
- 6808
- 6700
- 5808
- 5700

FEATURES & BENEFITS

- UL Listed for 6 amps of notification power
- Power supply's advanced switch mode design reduces damaging heat and manages power up to 50% more efficiently than other systems
- 24 VDC filtered output voltage
- Built-in synchronization for appliances from Gentex, AMSECO, System Sensor, and Wheelock
- Four power-limited notification outputs; 2 Class A or 4 Class B, or 1 Class A and 2 Class B
- NACs are programmable as notification appliance circuits, or as auxiliary power to be used as constant, resettable, or door holder power
- 3 amps per output circuit
- Ground fault detector
- CSFM approved
- Communicates to the FACP via 4-wire SBUS (wire runs up to 6000 ft)
- AC loss delay option shuts off power to non-essential high current accessories like magnetic door holders
- MEA approved
- Lightweight design adds to ease of installation and reduces shipping costs
- ANSI Cadence pattern output capability built-in
- UL 864,1481 & 1971 listed
- OSHPD (CA) OSP-0065-10 (see accessories)

5496 Technical Specifications

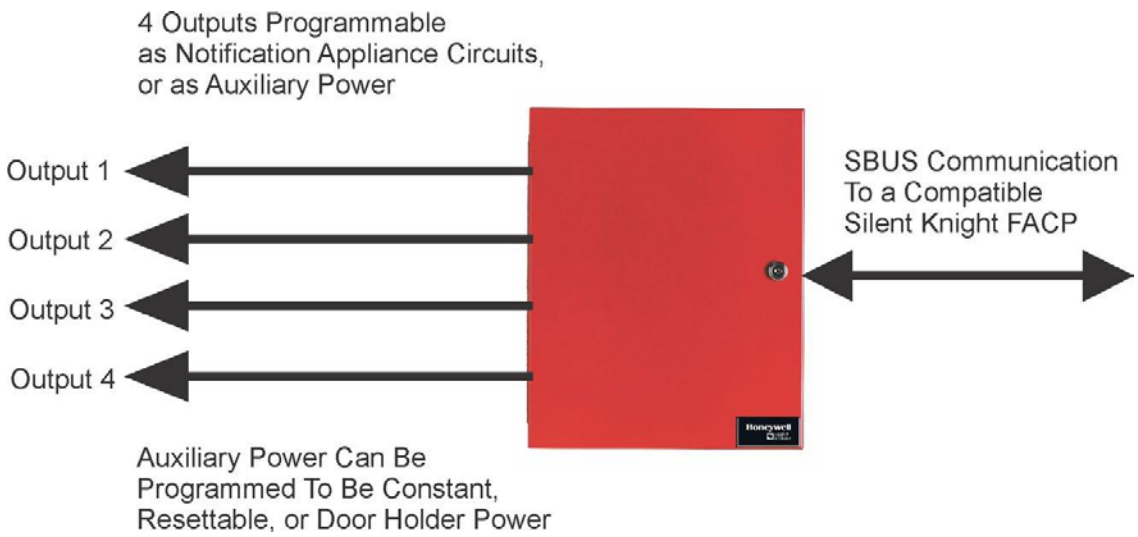

For a complete listing of all compliance approvals and certifications, please visit www.silentknight.com.

Microsoft, Windows, and the Windows Logo are registered trademarks or trademarks of Microsoft Corporation.

System Sensor® and Honeywell® are registered trademarks of Honeywell International, Inc

This document is not intended to be used for installation purposes. We try to keep our product information up-to date and accurate. We cannot cover all specific applications or anticipate all requirements. All specifications are subject to change without notice.

For Technical Support, call 800-446-6444

PHYSICAL

Overall Dimensions: 16" H x 12.25" W x 3" D (40.6 x 30.9 x 7.6 cm)
Shipping Weight: 8.7lbs

ENVIRONMENTAL

Operating Temperature: 32°F to 120°F (0°C to 49°C)
Humidity: 10 to 93% relative humidity (non-condensing)

ELECTRICAL:

AC Input: 120VAC at 2.7A
Output: 24VDC at 6A
Standby & Alarm Current: 10mA
Notification/Aux. Power Circuits: 4
Output Configuration:
2 Class A (Style Z)
4 Class B (Style Y)
1 Class A & 2 Class B
Amps Per Output Circuit: 3.0 (6.0 amps total)
Notification Circuit Output: 20.4 – 27.3VDC @ 3.0A each
End-of-Line Resistance: 4.7k W EOL resistor required on each Class B circuit
Battery Charging Capacity: 7.0 – 35.0AH

ORDERING INFORMATION

5496: Intelligent Power Module

ACCESSORIES

RBB: Remote Battery Box Accessory Cabinet. 16" W x 10" H x 6" D (406 mm W x 254 mm H x 152 mm D)
SK-SCK: Seismic Compliance Kit

AGENCY LISTINGS AND APPROVALS

- CSFM approved
- NFPA 72
- UL listed
- FM approved
- City of NY: 429-90-E Vol XIV

For more information

Learn more about Silent Knight's Product and other products available by visiting www.silentknight.com

Honeywell Silent Knight
12 Clintonville Road
Northford, CT 06472
800-328-0103
www.silentknight.com

Doc 350387| Rev F| 11/17
© 2017 Honeywell International Inc.

Fire Alarm Documents (FAD) Cabinet Fire Alarm Storage Cabinet

Description

The Notifier Fire Alarm Documents Cabinet (FAD) is the perfect solution to meet the demanding code standards required today. Notifier's primary goal is to manufacture code compliant solutions and this product allows you to do just that. This cabinet is the answer to comply with the NFPA 72 2007, Section 6.2.2.1 requirements which states, "A record of installed software and firmware version numbers shall be maintained at the location of the fire alarm control unit.

The Fire Alarm Documents cabinet may be used as a storage box for both printed and digital documentation, enabling you to store the system's test and certified inspection documents, service records, manuals and AS built drawings.

This cabinet is constructed of durable 16 gauge steel with a solid piano hinge and key lock. The cabinet includes a 4GB USB memory flash drive interface. Using a standard USB B connector, the USB flash drive interface allows you to use any standard USB printer cable to upload or download information. This feature allows you to store the fire alarm software in one secure place, so that the Technician can easily access the software and service the system.

The Fire Document Box (FDB) interior is designed to contain critical manuals and documents. It is constructed with a durable steel retainer. The FDB has two key ring hooks to hold system keys, and a frame to insert Authorized personnel business cards. In the inner door, you can add the Legend Sheet to record property, system, service, code and AHJ certification information, as well as required documentation. (See Figure 2).

Features

- Installed with a 4 gigabyte digital flash drive interface with USB B connector.
- Overall Dimensions:
  12" W x 13" H x 2¼" D (30.48 W x 33.02 H x 5.71 D cm).
- Offers two, key ring hooks to hold the system keys.
- Contains a frame plate to insert Authorized Personnel business cards.
- Constructed with 16 gauge steel box and cover for added security with a solid stainless steel hinge.
- Coated with a durable, baked-on finish (other colors available).
- Built with a stainless steel piano hinge with standard ¾"cat 30 key lock (other lock assemblies available).
- Includes a Legend Sheet to record passwords and system information.
- Imprinted with white indelible ink, 1" high lettering labeled, "FIRE ALARM DOCUMENTS."

Specifications

FAD Fire Alarm Documents Cabinet Dimensions: 12"W x 13"H x 2 1/4" D, (30.48 W x 33.02 H x 5.71 D cm).

Door Keylock: Barrel lock and piano hinge. 3/4" barrel lock and 12" (30.48 cm) piano hinge.

FAD Cabinet: UL® Listed, constructed of 18 gauge cold rolled steel.

Cabinet Finish: Red powder coat epoxy finish

Cabinet Cover Label: Silkscreen imprinted with white indelible ink, 1" high lettering labeled, "FIRE ALARM DOCUMENTS"

Cabinet Keylock: Keylocked with 3/4" barrel lock and 12" (30.48 cm) width stainless steel piano hinge.

Cabinet Backbox: The backbox includes a 4-hole knockout mounting pattern.

Cabinet Frame Plate: Insert frame plate accommodates and protects standard 8 1/2 x 11 manuals and document records.

Cabinet Inner Door Label: Legend Sheet attached to the inner door frame for system required documentation, key contacts and code information.

Cabinet Flash Drive Interface: 4 Gigabyte (minimum) digital flash memory drive with a standard USB B connector (used to upload and download information) is securely assembled to the interior cabinet. The drive is restricted to Authorized personnel with permission to use secure hardware devices to access the records.

Cabinet Key Holder: Two key ring holders and a pre-assembled frame plate to insert Authorized Personnel business cards.

Standards

The Fire Alarm Documents (FAD) Cabinet is designed to comply with the following standard:

UL Standard: S2580

Agency Listings and Approvals

These listings and approvals apply to the modules specified in this document. In some cases, certain modules or applications may not be listed by certain approval agencies, or listing may be in process. Consult factory for latest listing status.

UL: S2580, Vol. 3

CSFM: 7300-0553-0110

NFPA: 72 2007

NEMA

ISO 9001 Certification

Ordering Information

NF-FAD: Fire Alarm Storage Cabinet, Red. Includes NOTIFIER lock.

Figure 1 shows the interior enclosure of the Fire Alarm Documents cabinet.

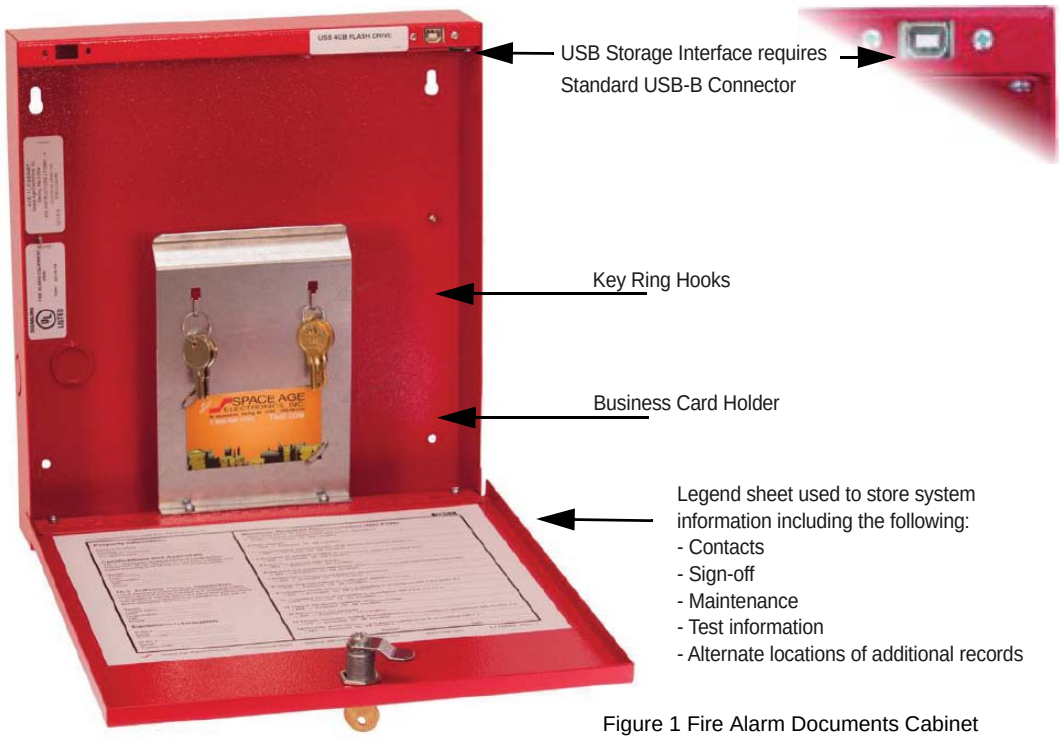

Figure 1 Fire Alarm Documents Cabinet

Figure 2 shows the Legend Sheet attached to the inner door of the Fire Alarm Document Cabinet.

Property Information	**Minimum Required Documentation**
Name of Property:_____	1 Written narrative providing intent and system description.
Address:_____	☐ N/A ☐ Enclosed or Alt. Location:_____
Description of Property: _____	2 Riser diagram
Occupancy Type:_____	☐ N/A ☐ Enclosed or Alt. Location:_____
Certification and Approvals	3 Floor plan layout showing location of all devices and control equipment.
16.1 System Installation Contractor:	☐ N/A ☐ Enclosed or Alt. Location:_____
This system, as specified herein, has been installed and tested according to all NFPA Standards cited therein.	4 Sequence of operation in either an input/ output matrix or narrative form.
	☐ N/A ☐ Enclosed or Alt. Location:_____
Signed:_____	5 Equipment technical data sheets.
Printed Name:_____	☐ N/A ☐ Enclosed or Alt. Location:_____
Date: _____/_____/_____	6 Manufacturers published instructions, including operation and maintenance instruction.
Organization:_____	☐ N/A ☐ Enclosed or Alt. Location:_____
Title:_____	7 Battery calculations (where batteries are provided).
Phone:_____	☐ N/A ☐ Enclosed or Alt. Location:_____
16.5 Authority Having Jurisdiction:	8 Voltage drop calculations for notification appliance circuits.
I have witnessed a satisfactory acceptance test of this system and find it to be installed and operating properly in accordance with its approved plans and specifications, its approved sequence of operations, and with all NFPA standards cited herein.	☐ N/A ☐ Enclosed or Alt. Location:_____
	9 Completed record of inspection and testing in accordance with 7.6.6 and 7.8.2.
	☐ N/A ☐ Enclosed or Alt. Location:_____
	10 Completed record of completion in accordance with 7.5.6 and 7.8.2.
	☐ N/A ☐ Enclosed or Alt. Location:_____
Signed:_____	11 Copy of site specific software, where applicable.
Printed Name:_____	☐ N/A ☐ Enclosed or Alt. Location:_____
Date: _____/_____/_____	12 Record (as-built) drawings.
Organization:_____	☐ N/A ☐ Enclosed or Alt. Location:_____
Title:_____	13 Periodic inspection, testing, and maintenance documentation in accordance with Section 7.6.
Phone:_____	☐ N/A ☐ Enclosed or Alt. Location:_____
Equipment Information:_____	14 Records, record retention, and record maintenance in accordance with 7.7.
ID No. 1:_____	☐ N/A ☐ Enclosed or Alt. Location:_____
Serial: _____	
Access Code: _____	
ID No. 2:_____	
Serial: _____	
Access Code: _____	Signed:_____Date:_____/_____/_____

Figure 2 Legend Sheet

ISO 9001
CERTIFIED
ENGINEERING & MANUFACTURING
QUALITY SYSTEMS

This document is not intended to be used for installation purposes.
We try to keep our product information up-to-date and accurate.
We cannot cover all specific applications or anticipate all requirements.
All specifications are subject to change without notice.

Notifier ® is a registered trademark of Honeywell International Inc. Space Age Electronics, Inc. is a ©copyright. UL® is a registered trademark of Underwriter's Laboratories Inc.

Country of Origin: US

NOTIFIER
12 Clintonville Road
Northford, CT 06472
www.notifier.com

NOTIFIER®
by Honeywell

POWER PS SONIC
TRUSTED BATTERY SOLUTIONS

PS SERIES

General Purpose | Emergency Lighting | Medical | Fire & Security

PS-12100

12V 12.0 AH @ 20-hr.
12V 11.5 AH @ 10-hr.

Rechargeable Sealed Lead Acid Battery
PS – General Purpose Series

TERMINALS: (mm)

F1: Quick disconnect tabs, 0.187" x 0.032" – Mate with AMP. INC. FASTON "187" series

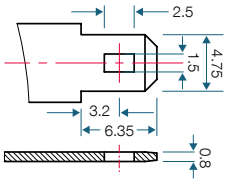

Torque – Not Applicable

OR

F2: Quick disconnect tabs, 0.250" x 0.032" – Mate with AMP. INC FASTON "250" series

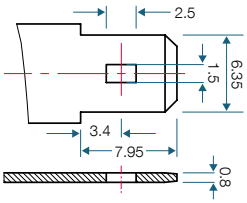

Torque – Not Applicable

FEATURES

- Absorbent Glass Mat (AGM) technology for superior performance
- Valve regulated, maintenance free spill proof construction
- Power/volume ratio yielding excellent energy density
- Rugged vibration and impact resistant ABS case and cover
- Gas recombination technology
- 5 year design life

APPROVALS

- Approved for transport by air. D.O.T., I.A.T.A., F.A.A. and C.A.B. certified
- U.L. recognized
- ISO9001:2015 – Quality management systems

DIMENSIONS: inch (mm)

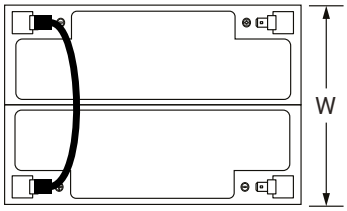

L: 5.95 (151)
W: 4.00 (102)
H: 3.70 (94)
HT: 3.86 (98)

Tolerances are +/- 0.04 in. (+/- 1mm) and +/- 0.08 in. (+/- 2mm) for height dimensions. All data subject to change without notice.

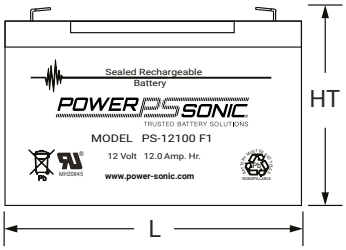

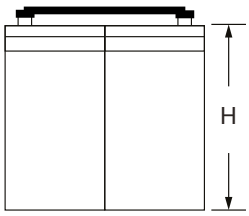

PERFORMANCE SPECIFICATIONS

Nominal Voltage	12 volts (6 cells)
Nominal Capacity	
20-hr. (600mA to 10.50 volts)	12.00 AH
10-hr. (1.15A to 10.50 volts)	11.50 AH
5-hr. (2.00A to 10.20 volts)	10.00 AH
1-hr. (9.00A to 9.00 volts)	9.00 AH
Approximate Weight	8.14 lbs. (3.69 kg)
Internal Resistance (approx.)	20.0 milliohms
Max Short-Duration Discharge Current (10 Sec.)	50.0 amperes
Shelf Life (% of nominal capacity at 68°F (20°C)	
1 Month	97%
3 Month	91%
6 Month	83%
Operating Temperature Range	
Charge	5°F (-15°C) to 122°F (50°C)
Discharge	-4°F (-20°C) to 140°F (60°C)
Case	ABS Plastic
Power Sonic Chargers	PSC-122000A-C PSC-122000-PC

CORPORATE HEADQUARTERS
(USA AND INTERNATIONAL EXCLUDING EMEA)
Power-Sonic Corporation
7550 Panasonic Way, San Diego,
California 92154
T: +1 (619) 661 2020
F: +1 (619) 661 3650
E: customer-service@power-sonic.com

POWER-SONIC EUROPE LIMITED
(EMEA – EUROPE, MIDDLE EAST AND AFRICA)
3 Buckingham Square,
Hurricane Way, Wickford,
Essex SS11 8YQ
T: +44 (0)1268 560686
F: +44 (0)1268 560902
E: salesEMEA@power-sonic.com

To ensure safe and efficient operation always refer to the latest edition of our Technical Manual, as published on our website.
© 2018. Power-Sonic Corporation. All rights reserved. All trademarks are the property of their respective owners.
All data subject to change without notice. E&O.E

POWER PS SONIC
TRUSTED BATTERY SOLUTIONS

PS SERIES

PS-12100

12V 12.0 AH @ 20-hr.
12V 11.5 AH @ 10-hr.

Rechargeable Sealed Lead Acid Battery
PS – General Purpose Series

SHELF LIFE & STORAGE

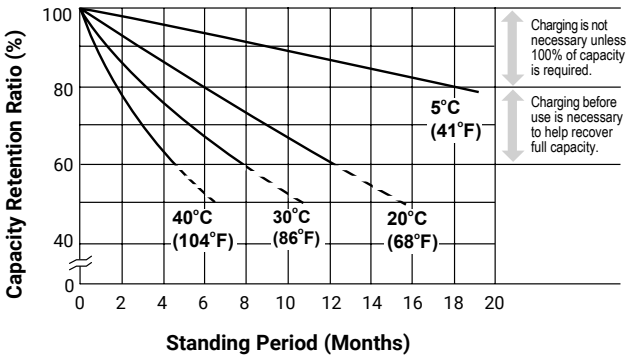

LIFE CHARACTERISTICS IN STAND-BY USE

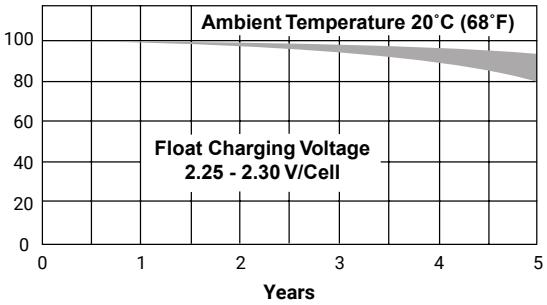

CHARGING

Cycle Applications: Apply constant voltage charge at 2.35v/c – 2.45v/c (14.1 – 14.7v for 12v Monobloc) at 20°C. Initial charging current should be set at less than 0.25C Amps. Switch to float charge to avoid overcharging.

"Float" or "Stand-By" Service: Apply constant voltage charge of 2.25v/c – 2.30v/c (13.5 to 13.8 volts for 12v Monobloc at 20°C. When held at this voltage, the battery will seek its own current level and maintain itself in a fully charged condition.

Temperature Compensation: Charging Voltage for both Cyclic and Standby applications should be regulated in relation to ambient temperature. As temperature rises charging voltage should be reduced to prevent overcharge and increased as temperature falls to avoid undercharge.

For further charging information including temperature compensation factors, see Power Sonic Technical Manual/ Power Sonic Charger specifications.

APPLICATIONS

- General purpose
- Emergency lighting
- Medical
- Fire and security

CHARGERS

Power Sonic offers a wide range of chargers suitable for batteries with a variety of capacities.

Please refer to our website for more information on our switch mode and transformer type chargers.

Please contact our technical department for advice if you have difficulty in locating a suitable charger.

FURTHER INFORMATION

Please refer to our website **www.power-sonic.com** for a complete range of useful downloads, such as product catalogs, material safety data sheets (MSDS), ISO certification, etc.

CORPORATE HEADQUARTERS
(USA AND INTERNATIONAL EXCLUDING EMEA)
Power-Sonic Corporation
7550 Panasonic Way, San Diego,
California 92154
T: +1 (619) 661 2020
F: +1 (619) 661 3650
E: customer-service@power-sonic.com

POWER-SONIC EUROPE LIMITED
(EMEA – EUROPE, MIDDLE EAST AND AFRICA)
3 Buckingham Square,
Hurricane Way, Wickford,
Essex SS11 8YQ
T: +44 (0)1268 560686
F: +44 (0)1268 560902
E: salesEMEA@power-sonic.com

To ensure safe and efficient operation always refer to the latest edition of our Technical Manual, as published on our website.

© 2018. Power-Sonic Corporation. All rights reserved. All trademarks are the property of their respective owners.
All data subject to change without notice. E&O.E

SK-PULL-SA / ~~SK-PULL-DA~~

Intelligent Pull Stations

The SK-PULL-SA is a single action pull station requiring only one motion to activate the station. The SK-PULL-DA is a dual action pull station requiring two motions to active the station. The SK-PULL-SA and SK-PULL-DA are for use with Honeywell Silent Knight Series fire control panel (FACP).

Extremely easy to operate, the SK-PULL-DA and SK-PULL-SA provide a fast and practical means of manually initiating a fire alarm signal. The FACP recognizes each manual pull station by its specific address saving precious seconds in determining the location of an alarm.

INSTALLATION

The SK-PULL-SA and SK-PULL-DA can be surface mounted to an SB-I/O surface back box or semi-flush mounted on a standard single-gang with a minimum depth of 2.13"(5.40 cm) or double gang or 4" (10.61 cm) square electrical box. You can also use the optional (System Sensor® PN BG-TR) trim ring if the station is being semi-flush mounted.

SK-PULL-SA

SK-PULL-DA

FEATURES & BENEFITS

- Installer can open station without causing an alarm condition
- Dual-color LED is visible through handle of station blinks green to indicate normal operation and remains steady red in an alarm condition
- Key operated test and reset lock using lock plate actuator
- Key matches compatible FACP locks
- Meets ADA requirement for 5 lbs maximum pull force to active
- Meets the Americans with Disabilities Act Accessibility Guidelines (ADAAG) controls and operating mechanisms guidelines (Section 4.1.3[13])
- Shell, door, and handle molded from durable LEXAN®
- Reliable analog communications for trouble-free operation
- Braille text on station handle
- Rotary address switches for fast installation
- Handle latches in down position and the word Activated appears, clearly indicating the station has been pulled
- UL Listed, including UL 38, Standard of Manually Actuated Signaling System
- CSFM Listed
- MEA Listed

SK-PULL-SA / SK-PULL-DA Technical Specifications

PHYSICAL

Dimensions: 5.5" H x 4" W x 1.45" D (14 x 10.2 x 3.7cm)

Housing Material: LEXAN polycarbonate resin

Bi-Colored LED:

- **Blinking Green:** Normal
- **Steady Red:** Alarm

Switch: Single pole, single throw (SPST) normally open (N/O) switch which closes upon activation of the pull station

ELECTRICAL

Operating Voltage: 15 – 32VDC

SLC Standby and Alarm Current: 350µA

Wire Gauge: Up to 12AWG (3.1 mm^2)

ENVIRONMENTAL

Operating Temperature: 32°F – 120°F (0°C – 49°C)

Humidity: 10% – 93% non-condensing

ORDERING INFORMATION

SK-Pull-SA: Single Action Pull Station

~~**SK-Pull-DA:** Dual Action Pull Station~~

ACCESSORIES

BG-TR: Optional trim ring.

SB-I/O: Surface backbox, indoor/outdoor.

* Unless otherwise noted, specifications apply to SK-Pull-SA and SK-Pull-DA

COMPATIBILITY

The SK-PULL-SA AND SK-PULL-DA are compatible with the following Honeywell Silent Knight fire alarm control panels:

6820: Addressable fire alarm control panel

6820EVS: Addressable fire alarm control panel with an emergency voice system.

6808: Addressable fire alarm control panel

6700: Addressable fire alarm control panel

5700: Addressable fire alarm control panel

5808: Addressable fire alarm control panel

5820XL: Addressable fire alarm control panel

5820XL-EVS: Addressable fire alarm control panel with an emergency voice system

For a complete listing of all compliance approvals and certifications, please visit www.silentknight.com.

Microsoft, Windows, and the Windows Logo are registered trademarks or trademarks of Microsoft Corporation.

Silent Knight®, System Sensor® and Honeywell® are registered trademarks of Honeywell International, Inc.

This document is not intended to be used for installation purposes. We try to keep our product information up-to date and accurate. We cannot cover all specific applications or anticipate all requirements. All specifications are subject to change without notice.

For Technical Support, call 800-446-6444.

For more information

Learn more about Honeywell Silent Knight and other products by visiting www.silentknight.com

Honeywell Silent Knight
12 Clintonville Road
Northford, CT 06472
800-328-0103

Doc 350135 | Rev E | 11/17
© 2017 Honeywell International Inc.

Honeywell | Addressable Devices

SILENT KNIGHT

Note: Thermal rate-of-rise detection and infrared detection capabilities shall be disabled for this design. For our application, we intend to only use the smoke detection and CO detection capabilities of this detector.

SK-FIRE-CO-W

Multi-Criteria Fire/CO Detector

General Description

SK-FIRE-CO-W is a plug-in, addressable device that provides both fire and carbon monoxide (CO) detection. The detector combines four separate sensing elements to sense multiple components of a fire: smoke, CO, light/flame, and heat. This approach enables enhanced sensitivity to real fire with heightened immunity to nuisance particulates. For CO, the detector's electrochemical sensing cell creates a separate signal for life safety CO detection.

SK-FIRE-CO-W in B200S-WH sounder base

Multiple sensors and communication can greatly reduce nuisance alarms compared to single sensing methods. Sophisticated algorithms maximize the advantages of all four sensor types creating our best detection strategy offering heightened immunity to nuisance particulate and enhanced sensitivity to real fire.

- Photoelectric sensors detect airborne particles associated with smoke.
- ~~Thermal sensors detect heat and rate-of-rise (135°F fixed temperature threshold).~~
- ~~Infrared sensors discern light patterns in the environment as an additional data point for alarm determination~~.

This ability to reject certain nuisance alarm triggers, such as theater smoke, supports the use of the fire/CO detector in applications where moderate to heavy nuisance conditions exist that might cause single sensing detectors to false alarm.

UL models meet UL 268 7th edition and UL 521 listing requirements for fire detection and UL 2075 standard for system-connected life safety carbon monoxide detection.

Released through the incomplete burning of various fuels, CO is a colorless, odorless and deadly gas that is virtually impossible to detect with the human senses. Because the potential exists for dangerous levels of CO to accumulate in almost any building, legislation mandating the use of CO detection in commercial spaces continues to grow.

B200S series intelligent sounder bases are recommended for use with SK-FIRE-CO-W. These bases can generate either a Temp 3 pattern for fire or a Temp 4 pattern for CO alarm indication. The B200S series bases recognize the System Sensor synchronization protocol for use as a component of the general evacuation signal — along with other System Sensor Audible/Visible devices — when connected to a power supply or Fire Alarm Control Panel (FACP) output capable of generating the System Sensor synchronization pulses.

FEATURES & BENEFITS

- Detects all four major elements of a fire
- Separate CO detection signal
- Separate audible signal for fire or CO alarm when used with a B200S series base
- Highest nuisance alarm immunity
- Automatic drift compensation for smoke and CO sensors
- RealTest® CO testing capability
- New modern profile with expanded color options
- Uses only one address on the SLC loop
- UL 268 7th edition, UL 521, and UL 2075 listed
- 10-year CO cell with end-of-life warning

SK-FIRE-CO-W Technical Specifications

PHYSICAL/OPERATING

Dimensions:

Height: 2.7" (69 mm) installed in B200S series sounder base

Diameter: 6.875" (175 mm) installed in B200S series sounder base

Weight: 3.4 oz. (95 g)

Operating Humidity Range: 15% to 90% Relative Humidity, Non-condensing

Operating Temperature Range: 32°F to 100°F (0°C to 38°C)

Air Velocity: 0 to 4000 ft./min. (0 to 1219.2 m/min.)

ELECTRICAL SPECIFICATIONS

Operating Voltage Range: 15 to 32 VDC

Operating Current @ 24 VDC: 200 uA (one communication every 5 seconds with green LED blink on communication)

Maximum Alarm Current: 2 mA @ 24 VDC (one communication every 5 seconds with red LED solid on)

Maximum Current: 4.5 mA @ 24 VDC (one communication every 5 seconds with amber LED solid on)

Isolator Load Rating: 0.0063

CO MONITORING UL STANDARD REFERENCE

Alarm thresholds (in parts per million) are as follows for:

70 ± 5ppm: Detector response time 60 – 240 min.

150 ± 5ppm: Detector response time 10 – 50 min.

400 ± 10ppm: Detector response time 4 – 15 min.

STANDARDS

Per UL standard 2075, the SK-FIRE-CO-W has have been tested to the sensitivity limits defined in UL Standard 2034.

UL Standard: UL 268 7th Edition

AGENCY LISTINGS AND APPROVALS

The listings and approvals below apply to the SK-FIRE-CO-W. In some cases, certain modules may not be listed by certain approval agencies, or listing may be in process. Consult the factory for the latest listing status.

UL: S6173

CSFM: 7272-0559:0517

ORDERING INFORMATION

SK-FIRE-CO-W: Advanced multi-criteria fire/CO detector, white

Bases

B501-WHITE: 4" Mounting base, white

B501-WHITE-BP: 4" mounting base, white, 10-pack

B501-IV: 4" Mounting base, ivory

B501-BL: 4" Mounting base, black

B300-6: 6" Flanged mounting base, white

B300-6-BP: 6" Flanged mounting base, white, 10-pack

B300-6-IV: 6" Flanged mounting base, ivory

B200S-WH: Intelligent addressable sounder base, white

B200S-IV: Intelligent addressable sounder base, ivory

B200S-LF-WH: Intelligent addressable sounder base, low-frequency, white

B200S-LF-IV: Intelligent addressable sounder base, low-frequency, ivory

B224BI-WH: Isolator base, white

B224BI-IV: Isolator base, ivory

B224RB-WH: Relay base, white

B224RB-IV: Relay base, ivory

Accessories

SMB600: Surface mounting kit (flanged)

TR300: Trim ring, white

TR300-IV: Trim ring, ivory

CK300-IR: IR color kit (includes cover and trim ring), white, 10 pack

CK300-IR-IV: IR color kit (includes cover and trim ring), ivory, 10 pack

CK300-IR-BL: IR color kit (includes cover and trim ring), black, 10 pack

RA100Z: Remote LED annunciator

M02-04-00: Detector test magnet

M02-09-00: Telescoping test magnet

Silent Knight® and **RealTest**® are registered trademarks of Honeywell International Inc. ©2019. All rights reserved. Unauthorized use of this document is strictly prohibited.

This document is not intended to be used for installation purposes. We try to keep our product information up-to-date and accurate. We cannot cover all specific applications or anticipate all requirements. All specifications are subject to change without notice.

Country of origin: Mexico

Honeywell Silent Knight
12 Clintonville Road
Northford, CT 06472-1610
203.484.7161
www.silentknight.com

SK-62001 | A | 05/19
©2019 Honeywell International Inc.

Honeywell
SILENT KNIGHT

SK-PHOTO-W Series

Intelligent Plug-In Photoelectric Smoke Detector

Honeywell Silent Knight SK-PHOTO-W Series plug-in smoke detectors are designed for both performance and aesthetics. A new modern, sleek, contemporary design and enhanced optical sensing chamber is engineered to sense smoke produced by a wide range of combustion sources in accordance with more stringent code standards.

The SK-PHOTO-W Series detector sensitivity can be programmed in the control panel software. Sensitivity is continuously monitored and reported to the panel. Point ID capability allows each detector's address to be set with rotary, decimal address switches, providing exact detector location for selective maintenance when chamber contamination reaches an unacceptable level.

Dual electronic thermistors add 135°F (57°C) fixed temperature thermal sensing on the SK-PHOTO-T-W. The SK-PHOTO-R-W is a remote test capable detector for use with DNR Series duct detector housings.

SK-PHOTO-W

FEATURES & BENEFITS

- New modern profile for improved aesthetics
- Stable communication technique with noise immunity
- Low standby current
- Two-wire SLC connection
- Optional remote, single- gang LED accessory
- Dual LED design provides 360° viewing angle
- Remote test feature from the panel
- Built-in functional test switch activated by external magnet
- Built-in tamper-resistant feature
- Sealed against back pressure
- Expanded color options
- SEMS screws for wiring of the separate base
- Optional relay, isolator, and sounder bases
- Plugs into separate base for ease of installation and maintenance

DETECTOR SPACING AND APPLICATIONS

Honeywell recommends spacing detectors in compliance with NFPA 72. In low airflow applications with smooth ceiling, space detectors 30 feet (9m). For specific information regarding detector spacing, placement, and special applications refer to NFPA 72. System Smoke Detector Application Guide, document A05-1003, is available at systemsensor.com

INSTALLATION

The SK-PHOTO-W Series plug-in detectors use a separate base to simplify installation, service, and maintenance. Installation instructions are shipped with each detector.

Mount base (all base types) on an electrical backbox which is at least 1.5" (3.81 cm) deep.

NOTE:

• Because of the inherent supervision provided by the SLC loop, end-of-line resistors are not required. Wiring "T-taps" or branches are permitted for Style 4 (Class "B") wiring.

• When using relay or sounder bases, consult the installation sheet for device limitations between isolator modules and isolator bases.

ORDERING INFORMATION

SK-PHOTO-W: Photoelectric smoke detector, white.

SK-PHOTO-R-W: Photoelectric smoke detector, remote test capable, for use with DNR(W) duct smoke detectors, white.

SK-PHOTO-T-W: Photoelectric smoke detector with thermal sensing, white.

INTELLIGENT BASES

B300-6: White, standard flanged low-profile mounting base.

B300-6-BP: Bulk pack of B300-6, package contains 10.

B300-6-IV: Ivory, standard flanged low-profile mounting base.

B501-WHITE: White, standard European flangeless mounting base. UL listed.

B501-BL: Black, standard European flangeless mounting base. UL listed.

B501-IV: Ivory, standard European flangeless mounting base. UL listed.

B200S-WH: White, Intelligent, programmable sounder base.

B200S-IV: Ivory, Intelligent, programmable sounder base.

B200SR-WH: White, Intelligent sounder base for retrofit applications.

B200SR-IV: Ivory, Intelligent sounder base for retrofit applications.

B200S-LF-WH: White, Low Frequency Intelligent, programmable sounder base.

B200S-LF-IV: Ivory, Low Frequency Intelligent, programmable sounder base.

B200SR-LF-WH: White, Low Frequency Intelligent sounder base for retrofit applications.

B200SR-LF-IV: Ivory, Low Frequency Intelligent sounder base for retrofit applications.

B224RB-WH: White, plug-in System Sensor relay base.

B224RB-IV: Ivory, plug-in System Sensor relay base.

B224BI-WH: White, plug-in System Sensor isolator detector base.

B224BI-IV: Ivory, plug-in System Sensor isolator detector base.

ACCESSORIES

CK300: Color Kit (includes cover and trim ring), white, 10-Pack.

CK300-IV: Color Kit (includes cover and trim ring), ivory, 10-Pack.

CK300-BL: Color Kit (includes cover and trim ring), black, 10-Pack.

M02-04-01: Detector test magnet.

M02-09-00: Telescoping test magnet.

RA100Z: Remote LED annunciator

SMB600: Surface Mounting Kit (flanged).

TR300: Replacement trim ring for B300-6, white.

TR300-IV: Replacement trimring for B300-6-IV, ivory.

SK-PHOTO-W Series Detector Technical Specifications

PHYSICAL

Height: 2.0" (51mm) installed in B300-6 base

Diameter: 6.2" (156mm) installed in B300-6 base 4.1" (104 mm) installed in B501 base

Weight: 3.4 oz (95 g)

ENVIRONMENTAL

Operating Temperature range:

Photo: 32°F to 122°F (0°C to 50°C)

Photo with Thermal: 32°F to 100°F (0°C to 38°C)

UL listed Velocity range: Photo/Photo with Thermal: 0 to 4,000 fpm (0 to 20 m/sec) (suitable for installation in ducts)

Humidity: 10% to 93% non-condensing

Thermal Ratings: Fixed Temperature Set point: 135°F (57°C)

ELECTRICAL RATINGS

Voltage Range: 15 to 32VDC peak

Operating Current @ 24VDC: 200µA (one communication every 5 seconds with green LED blink on communication)

Maximum Current: 4.5mA @ 24VDC (one communication every 5 seconds with amber LED solid on).

COMPATIBILITY

The SK-PHOTO-W series detectors are compatible with the following Honeywell Silent Knight fire alarm control panels:

6820: Addressable fire alarm control panel

6820EVS: Addressable fire alarm control panel with an emergency voice system.

6808: Addressable fire alarm control panel

6700: Addressable fire alarm control panel

5700: Addressable fire alarm control panel

5808: Addressable fire alarm control panel

5820XL: Addressable fire alarm control panel

5820XL-EVS: Addressable fire alarm control panel with an emergency voice system

AGENCY LISTINGS AND APPROVALS

For exact certification listings for each model, please reference the respective agency Web site.
UL listed: S6173
FM approved
CSFM: 7272-0559:0523

For a complete listing of all compliance approvals and certifications, please visit www.silentknight.com.

Microsoft, Windows, and the Windows Logo are registered trademarks or trademarks of Microsoft Corporation.

Silent Knight®, System Sensor® and Honeywell® are registered trademarks of Honeywell International, Inc.

This document is not intended to be used for installation purposes. We try to keep our product information up-to date and accurate. We cannot cover all specific applications or anticipate all requirements. All specifications are subject to change without notice.

For Technical Support, call 800-446-6444.

For more information

Learn more about Honeywell Silent Knight and other products by visiting www.silentknight.com

Honeywell Silent Knight
12 Clintonville Road
Northford, CT 06472
800-328-0103

Doc 351634 | Rev A | 04/18
© 2018 Honeywell International Inc.

SK-MONITOR

Intelligent Monitor Module

The SK-MONITOR is an addressable monitor module for use with Honeywell Silent Knight Series fire alarm control panels (FACPs). The SK-MONITOR is intended for use in intelligent, two-wire systems, where individual address of each module is selected using the built-in rotary switches.

The SK-MONITOR supports Class A supervised or Class B supervised wiring to the load device. Conventional 4-wire smoke detectors can be monitored for alarm and trouble conditions.

SK-MONITOR

INSTALLATION

The SK-MONITOR mounts directly into a 4" square electrical box. The box must have a minimum depth of 2-1/8". A surface mount electrical box (System Sensor® PN SMB500) is available from Silent Knight.

FEATURES & BENEFITS

- Single contact monitor
- Support for Class A and Class B wiring
- Fully supervised
- Panel controlled status LED that flashes green in normal state and is solid red in alarm
- SEMS screws for easy wiring
- UL Listed
- Rotary address switches for fast installation

SK-MONITOR Technical Specifications

PHYSICAL

Height: 4.5"H x 4" W x 1.25"D (11.4 X 10.2 X 3cm)

Shipping Weight: 6.3 oz (196 g)

ELECTRICAL

Operating Voltage: 15 – 32VDC

Current Draw (LED on): 5.0mA max

Operating Current (LED flashing): 375µA

Standby Current: 400 µA max @ 24 VDC (one communication every 5 sec with 47K EOL); 550 µA max @ 24 VDC (one communication every 5 sec with EOL <1K)
5.5 mA (with LED latched on)

LED Current: 5.5 mA (with LED latched on)
End-of-Line Resistance: 47K Ω

Initiating Device Circuit Wiring Resistance: 1,500 Ω max

SLC Loop Resistance: 40 Ω max.

ENVIRONMENTAL

Operating Temperature: 32°F – 120°F (0°C – 49°C)

Humidity: 10% – 93% non-condensing

ORDERING INFORMATION

SK-MONITOR: Monitor Module

ACCESSORIES.

SMB500: 4" Square surface mount electrical box

COMPATIBILITY

The SK-MONITOR is compatible with the following Honeywell Silent Knight fire alarm control panels:

6820: Addressable fire alarm control panel

6820EVS: Addressable fire alarm control panel with an emergency mass notification system.

6808: Addressable fire alarm control panel

6700: Addressable fire alarm control panel

5700: Addressable fire alarm control panel

5808: Addressable fire alarm control panel

5820XL: Addressable fire alarm control panel

5820XL-EVS: Addressable fire alarm control panel with an emergency mass notification system

For a complete listing of all compliance approvals and certifications, please visit www.silentknight.com.

Microsoft, Windows, and the Windows Logo are registered trademarks or trademarks of Microsoft Corporation.

Silent Knight®, System Sensor® and Honeywell® are registered trademarks of Honeywell International, Inc.

This document is not intended to be used for installation purposes. We try to keep our product information up-to date and accurate. We cannot cover all specific applications or anticipate all requirements. All specifications are subject to change without notice.

For Technical Support, call 800-446-6444.

For more information

Learn more about Honeywell Silent Knight and other products by visiting www.silentknight.com

Honeywell Silent Knight
12 Clintonville Road
Northford, CT 06472
800-328-0103

Doc 350131 | Rev G | 11/17
© 2017 Honeywell International Inc.

L-Series and L-Series with LED Indoor Selectable Horns, Strobes and Horn Strobes

System Sensor L-Series and L-Series with LED audible visible notification products are rich with features guaranteed to cut installation times and maximize profits with lower current draw and modern aesthetics.

Features

- LED technology provides lower current draw
- Digital Voltage Meter (DVM) diagnostic test points for Horn Strobes and Strobes
- Common aesthetics across the L-Series platform
- Standard and compact sizes
- Tamper-resistant construction
- Field-selectable candela settings on wall units: 15, 30, 75, 95, 110, 135, and 185
- Field-selectable candela settings on ceiling units: 15, 30, 75, 95, 115, 150, and 177
- Rotary switches for candela, tone and volume selections
- Mounting plate provides plug-in design for easier installation and shorting springs to check wiring continuity
- Electrically compatible with legacy SpectrAlert, SpectrAlert Advance and L-series devices
- Synchronization through use of UL approved power supplies that support System Sensor Sync protocol or System Sensor MDL3 Sync Module
- Horns, Strobes and Horn Strobes listed for wall or ceiling use

Agency Listings

SIGNALING c UL us LISTED	SIGNALING UL LISTED	ULC LISTED	FM APPROVED	
Horn Strobes and Strobes: S5512, S4011	Horns: S4011	Horns: S4011	3057072 FM23FPUS0195	7300-1653:0525 7135-1653:0503 7135-1653:0526

The System Sensor L-Series and L-Series with LED platform offers the most versatile and easy-to-use line of horns, strobes, and horn strobes in the industry with lower current draw and modern aesthetics. LED lighting technology offers significantly lower current draw compared to older Xenon bulbs across a full candela range. This improves design flexibility for notification appliance circuits (NACs) while also reducing power supply requirements allowing for simpler and lower cost installations.

Flexible design options meet virtually any application requirement: wall or ceiling mount, standard or compact sizes, red or white color choices, bezel kits for alternate markings and languages, and LED color lenses for distinctive visual signaling. In addition, installers can easily adapt devices using field selectable candela, tone and volume settings using rotary switches.

The L-Series and L-Series with LED line is developed to simplify installation. All devices feature plug-in designs with minimal intrusion into the back box, making installations fast and foolproof while virtually eliminating costly and time-consuming ground faults. The universal mounting plate includes an onboard shorting spring, so installers can test wiring continuity before the device is installed.

In addition, the System Sensor L-Series with LED notification appliances offer a new diagnostic test point feature that allows you to measure device voltage with a digital voltage meter (DVM) without removing the appliance from the wall or ceiling. The DVM test points are discreetly located on the face of the notification appliance which enable faster troubleshooting and end of line (EOL) voltage checks while greatly reducing the risk of misplacing or damaging appliances during troubleshooting.

L-Series and L-Series with LED Specifications

Physical/Electrical Specifications	
Standard Operating Temperature	32°F to 120°F (0°C to 49°C)
Humidity Range	10 to 93% non-condensing
Strobe Flash Rate	1 flash per second
Nominal Voltage, LED Strobes and Horn Strobes	Regulated 24 VDC
Nominal Voltage, Horns	Regulated 12 VDC or regulated 24 DC/FWR
Operating Voltage Range, LED Strobes and Horn Strobes	16 to 33 V (24 V nominal)
Operating Voltage Range, Horns	8 to 17.5 V (12 V nominal) or 16 to 33 V (24 V nominal)
Input Terminal Wire Gauge	12 to 18 AWG

UL/ULC Current Draw Data, Horn Tones, and Sound Output Data

UL/ULC Maxmimum Strobe Current Draw (mA)

	Candela Rating	16–33 Volts Wall	16–33 Volts Ceiling
Candela Range	15	18	18
	30	22	22
	75	70	70
	95	75	75
	110	85	—
	115	—	90
	135	105	—
	150	—	110
	177	—	115
	185	120	—

UL/ULC Maxmimum Horn Current Draw (mA RMS)

		8–17.5 Volts	16–33 Volts	
Sound Pattern	**dB**	**DC**	**DC**	**FWR**
Temporal	High	39	44	54
Temporal	Low	28	32	54
Non-Temporal	High	43	47	54
Non-Temporal	Low	29	32	54
3.1 KHz Temporal	High	39	41	54
3.1 KHz Temporal	Low	29	32	54
3.1 KHz Non-Temporal	High	42	43	54
3.1 KHz Non-Temporal	Low	28	29	54
Coded	High	43	47	54
3.1 KHz Coded	High	42	43	54

UL/ULC Maximum Horn Strobe Current Draw (mA) and Sound Output (dBA)

			Current Draw (mA RMS), Horn Strobe, Candela Range (15-185 cd)										Sound Output (dBA)
			16-33 Volts										16-33V
Switch Pos.	**Sound Pattern**	**Volume Setting**	**15cd**	**30cd**	**75cd**	**95cd**	**110cd WALL**	**115cd CEILING**	**135cd WALL**	**150cd CEILING**	**177cd CEILING**	**185cd WALL**	**DC**
1	Temporal 3	High	35	38	87	92	94	120	189	189	190	190	87
2	Temporal 3	Low	35	38	87	92	94	120	135	135	145	145	79
3	Non-Temporal	High	50	52	87	92	94	120	127	127	135	135	87
4	Non-Temporal	Low	35	38	87	92	94	120	125	125	130	130	79
5	3.1KHz Temporal 3	High	35	38	87	89	91	115	155	155	165	165	86
6	3.1KHz Temporal 3	Low	35	38	87	89	91	115	128	130	135	135	80
7	3.1KHz Non-Temporal	High	40	42	87	89	91	115	125	125	135	135	86
8	3.1KHz Non-Temporal	Low	35	38	87	89	91	115	120	120	130	130	80

L-Series with LED Dimensions: Wall-Mounted Equipment

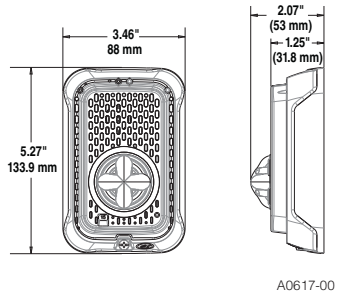

Compact Strobe, Horn Strobe for Wall

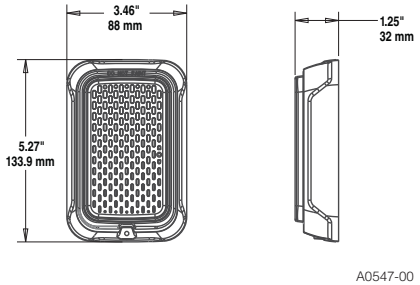

Compact Horn

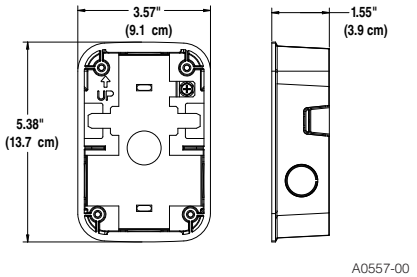

Compact Surface Mount Back Box for Walls (SBBGRL, SBBGWL)

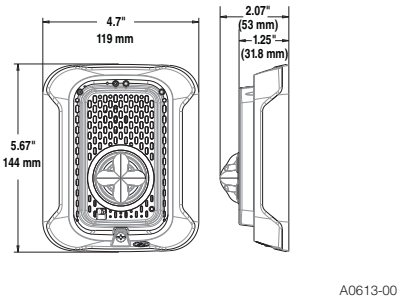

Strobes, Horn Strobes for Walls

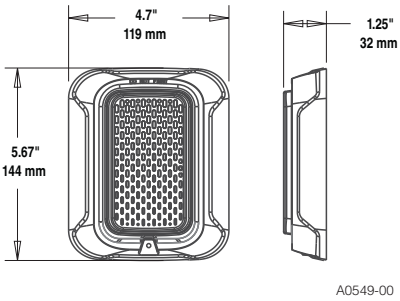

Horn

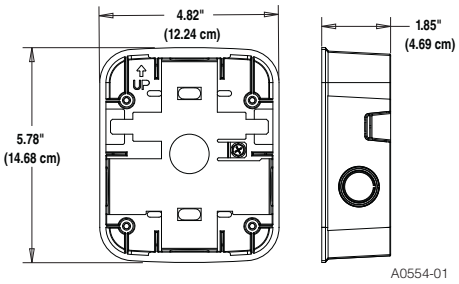

Surface Mount Back Box for Walls (SBBRL/SBBWL)

L-Series with LED Dimensions: Ceiling-Mounted Equipment

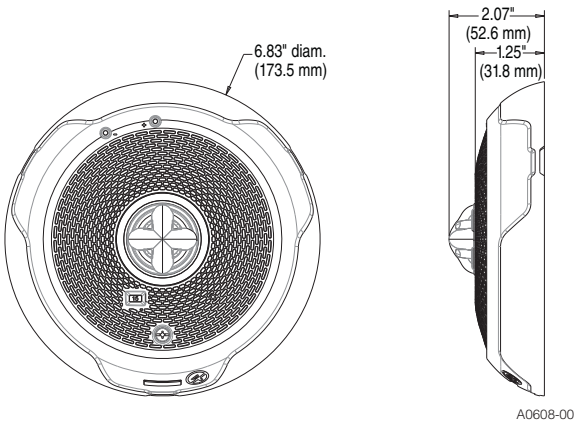

Strobes and Horn Strobes for Ceilings

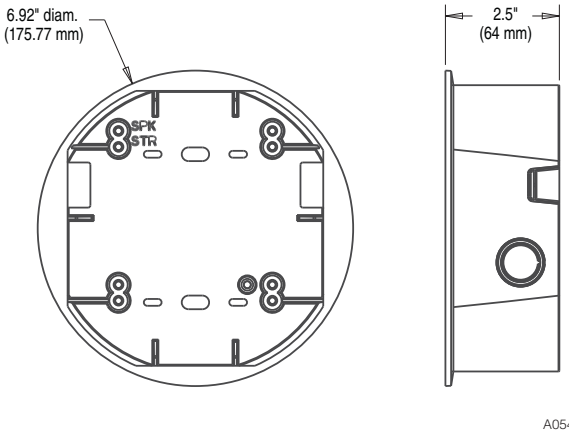

Surface Mount Back Box for Ceilings (SBBCRL, SBCWL)

L-Series with LED: Ordering Information

Model	Description
L-Series with LED Horn Strobes	
P2RLED	2-Wire, Horn Strobe, Wall, Red
P2RLED-B	2-Wire, Horn Strobe, Wall, Red, Bilingual
P2WLED	2-Wire, Horn Strobe, Wall, White
P2WLED-B	2-Wire, Horn Strobe, Wall, White, Bilingual
P2GRLED	2-Wire, Compact Horn Strobe, Wall, Red
P2GRLED-B	2-Wire, Compact Horn Strobe, Wall, Red, Bilingual
P2GWLED	2-Wire, Compact Horn Strobe, Wall, White
P2GWLED-B	2-Wire, Compact Horn Strobe, Wall, White, Bilingual
P2RLED-P	2-Wire, Horn Strobe, Wall, Red, Plain
P2WLED-P	2-Wire, Horn Strobe, Wall, White, Plain
P2RLED-SP	2-Wire, Horn Strobe, Wall, Red, FUEGO
P2WLED-SP	2-Wire, Horn Strobe, Wall, White, FUEGO
PC2RLED	2-Wire, Horn Strobe, Ceiling, Red
PC2RLED-B	2-Wire, Horn Strobe, Ceiling, Red, Bilingual
PC2WLED	2-Wire, Horn Strobe, Ceiling, White
PC2WLED-B	2-Wire, Horn Strobe, Ceiling, White, Bilingual
L-Series with LED Strobes	
SRLED	Strobe, Wall, Red
SRLED-B	Strobe, Wall, Red, Bilingual
SWLED	Strobe, Wall, White
SWLED-B	Strobe, Wall, White, Bilingual
SGRLED	Strobe, Compact, Wall, Red
SGRLED-B	Strobe, Compact, Wall, Red, Bilingual
SGWLED	Strobe, Compact, Wall, White
SGWLED-B	Strobe, Compact, Wall, White, Bilingual
SRLED-P	Strobe, Wall, Red, Plain
SWLED-P	Strobe, Wall, White, Plain
SRLED-SP	Strobe, Wall, Red, FUEGO
SWLED-CLR-ALERT	Strobe, Wall, White, ALERT
SWLED-ALERT	Strobe, Wall, White, ALERT, Amber Lens
SCRLED	Strobe, Ceiling, Red
SCRLED-B	Strobe, Ceiling, Red, Bilingual
SCRLED-P	Strobe, Ceiling, White, Plain
SCWLED	Strobe, Ceiling, White
SCWLED-B	Strobe, Ceiling, White, Bilingual
SCWLED-P	Strobe, Ceiling, White, Plain
SCWLED-CLR-ALERT	Strobe, Ceiling, White, ALERT
L-Series Horns	
HRL*	Horn, Red
HRLA*	Horn, Red, Plain, ULC
HWL*	Horn, White
HWLA*	Horn, White, Plain, ULC
HGRL*	Compact Horn, Red
HGRLA*	Compact Horn, Red, Plain, ULC
HGWL*	Compact Horn, White
HGWLA*	Compact Horn, White, Plain, ULC

Model	Description
LED Lenses	
LENS-A3	Lens LED Amber Wall/Ceiling
LENS-B3	Lens LED Blue Wall/Ceiling
LENS-G3	Lens LED Green Wall/Ceiling
LENS-R3	Lens LED Red Wall/Ceiling
Accessories	
TR-2	Universal Wall Trim Ring Red
TR-2W	Universal Wall Trim Ring White
SBBRL	Wall Surface Mount Back Box, Red
SBBWL	Wall Surface Mount Back Box, White
SBBGRL	Compact Wall Surface Mount Back Box, Red
SBBGWL	Compact Wall Surface Mount Back Box, White
TRC-2	Universal Ceiling Trim Ring, Red
TRC-2W	Universal Ceiling Trim Ring, White
SBBCRL	Ceiling Surface Mount Back Box, Red
SBBCWL	Ceiling Surface Mount Back Box, White
Bezels†	
BZR	Wall Red Bezel Kit
BZW	Wall White Bezel Kit
BZGR	Compact Wall Red Bezel Kit
BZGW	Compact Wall White Bezel Kit
BZRC	Horn Strobe Ceiling Red Bezel Kit
BZWC	Horn Strobe Ceiling White Bezel Kit

Notes for L-Series With LED Horn Strobes and Strobes:

All -P models have a plain housing (no “FIRE” marking on cover).
All -SP models have “FUEGO” marking on cover.
All -ALERT models have “ALERT” marking on cover.
All -B models have “FIRE/FEU” marking on cover for use in Canadian applications.
Amber lenses are not for use in Canadian applications

Notes for L-Series Horns:

*Horn-only models are listed for wall or ceiling use.

Notes for Bezels:

†Each bezel pack ships in a package of 5.
Add one of the following extensions for print/language options: -F (FIRE), -AL (ALERT), -EV (EVAC), -AG (AGENT), -P (Plain), -FR (FEU), -PG (FOGO), -SP (FUEGO), -SPE (FUEGO/FIRE).

3825 Ohio Avenue • St. Charles, IL 60174 USA
Phone: 800-SENSOR2 • Fax: 630-377-6495
www.systemsensor.com

3333 Unity Drive, Mississauga, ON L5L 3S6 Canada
Phone: 800-SENSOR2 • Fax: 905-812-0771
www.systemsensor.ca

System Sensor® is a registered trademark of Honeywell International, Inc.

©2023 System Sensor.
Product specifications subject to change without notice. Visit systemsensor.com for current product information, including the latest version of this data sheet.
AVDS916-01 • 10/03/2023

Outdoor Selectable-Output Horns, Strobes, and Horn Strobes for Wall Applications

SpectrAlert® Advance outdoor audible visible products are rich with features that cut installation times and maximize profits.

Features

- Weatherproof per NEMA 4X, IP56
- Listed to UL 1638 (strobe) and UL 464 (horn)
- Compatible with System Sensor synchronization protocol and legacy SpectrAlert products
- Field-selectable candela settings: 15, 15/75, 30, 75, 95, 110, 115, 135, 150, 177, and 185
- Automatic selection of 12- or 24-volt operation at 15 and 15/75 candela
- Rotary switch for horn tone and three volume selections
- Horn rated at 88+ dBA at 16 volts
- Rated from –40°F to 151°F
- Universal mounting plate with an onboard shorting spring that tests wiring continuity before devices are installed
- Plug-in design with minimal intrusion into the back box
- Tamper-resistant construction
- Listed for ceiling or wall mounting

Agency Listings

SIGNALING UL LISTED
S4011 (chimes, horn strobes, horns)
S3593 (outdoor and alert strobes)

FM APPROVED
3023572

MEA approved
MEA452-05-E

7300-1653:187 (outdoor strobes)
7125-1653:188 (horn strobes, chime strobes)
7135-1653:189 (horns, chimes)

SpectrAlert Advance offers the broadest line of outdoor horns, strobes, and horn strobes in the industry. With white or red plastic housings, wall or ceiling mounting options, and plain or FIRE-printed devices, SpectrAlert Advance can meet virtually any application requirement, including indoor, outdoor, wet, and dry applications in temperatures from –40°F to 151°F.

Like the entire SpectrAlert Advance line, outdoor horns, strobes, and horn strobes for wall applications include a variety of features that increase application flexibility and simplify installation. First, field-selectable settings, including candela, automatic selection of 12- or 24-volt operation, horn tones, and three volume options enable installers to easily adapt devices to meet requirements.

Next, SpectrAlert Advance devices use a universal mounting plate for both wall and ceiling applications. This mounting plate includes an onboard shorting spring that ensures wiring continuity before devices are installed, so installers can verify proper wiring without mounting the devices and exposing them to potential construction damage. Once the plates are mounted, all SpectrAlert Advance devices utilize a plug-in design with a single captured screw to speed installation and virtually eliminate costly ground faults.

Outdoor devices ship with weatherproof plastic back boxes (metal back boxes are available separately) that accommodate in-and-out wiring for daisy chaining devices. Plastic back boxes feature removable side flanges and improved resistance to saltwater corrosion. Knock-outs located on the back eliminate the need to drill holes for screw-in mounting. Plastic and metal weatherproof back boxes come with ¾-inch top and bottom conduit entries and ¾-inch knock-outs at the back. A screw-in NPT plug with an O-ring gasket for a watertight seal is included with each back box.

SpectrAlert Advance Outdoor Horn, Strobe, and Horn Strobe Specifications

Architect/Engineer Specifications

General

SpectrAlert Advance outdoor horns, strobes, and horn strobes shall mount to a weatherproof back box. A universal mounting plate shall be used for mounting ceiling and wall products. The notification appliance circuit wiring shall terminate at the universal mounting plate. Also, SpectrAlert Advance products, when used with the Sync•Circuit™ Module accessory, shall be powered from a non-coded notification appliance circuit output and shall operate on a nominal 12 or 24 volts. When used with the Sync•Circuit Module, 12-volt-rated notification appliance circuit outputs shall operate between 9 and 17.5 volts; 24-volt-rated notification appliance circuit outputs shall operate between 17 and 33 volts. Outdoor SpectrAlert Advance products shall operate between –40 and 151 degrees Fahrenheit from a regulated DC or full-wave rectified unfiltered power supply. Strobes and horn strobes shall have field-selectable candela settings including 15, 15/75, 30, 75, 95, 110, 115, 135, 150, 177, and 185.

Strobe

The strobe shall be a System Sensor SpectrAlert Advance Model _____ listed to UL 1971 and shall be approved for fire protective service. The strobe shall be wired as a primary-signaling notification appliance and comply with the Americans with Disabilities Act requirements for visible signaling appliances, flashing at 1 Hz over the strobe's entire operating voltage range. The strobe light shall consist of a xenon flash tube and associated lens/reflector system. The strobe must be installed with its weatherproof back box in order to remain outdoor approved per UL. The strobe shall be suitable for use in wet environments.

Horn Strobe Combination

The horn strobe shall be a System Sensor SpectrAlert Advance Model _____ listed to UL 1971 and UL 464 and shall be approved for fire protective service. The horn strobe shall be wired as a primary-signaling notification appliance and comply with the Americans with Disabilities Act requirements for visible signaling appliances, flashing at 1 Hz over the strobe's entire operating voltage range. The strobe light shall consist of a xenon flash tube and associated lens/reflector system. The horn shall have three audibility options and an option to switch between a temporal three pattern and a non-temporal (continuous) pattern. These options shall be set by a multiple position switch. On four-wire products, the strobe shall be powered independently of the sounder. The horn or horn strobe models shall operate on a coded or non-coded power supply. The horn strobe must be installed with its weatherproof back box in order to remain outdoor approved per UL. The horn strobe shall be suitable for use in wet environments.

Physical/Electrical Specifications

Operating Temperature	–40°F to 151°F (–40°C to 66°C)
Strobe Flash Rate	1 flash per second
Nominal Voltage	Regulated 12 DC/FWR or regulated 24 DC/FWR[1]
Operating Voltage Range[2]	8 to 17.5 V (12 V nominal) or 16 to 33 V (24 V nominal)
Input Terminal Wire Gauge	12 to 18 AWG
Wall-Mount Dimensions (including lens)	5.6″L × 4.7″W × 2.5″D (142 mm L × 119 mm W × 64 mm D)
Horn Dimensions	5.6″L × 4.7″W × 1.3″D (142 mm L × 119 mm W × 33 mm D)
Wall-Mount Weatherproof Back Box Dimensions (SA-WBB)	5.7″L × 5.1″W × 2.0″D (145 mm L × 130 mm W × 51 mm D)

Notes:

1. Full Wave Rectified (FWR) voltage is a non-regulated, time-varying power source that is used on some power supply and panel outputs.
2. P, S, PC, and SC products will operate at 12 V nominal only for 15 and 15/75 cd.

UL Current Draw Data

UL Max. Strobe Current Draw (mA RMS)

		8–17.5 Volts		16–33 Volts	
	Candela	DC	FWR	DC	FWR
Standard Candela Range	15	123	128	66	71
	15/75	142	148	77	81
	30	NA	NA	94	96
	75	NA	NA	158	153
	95	NA	NA	181	176
	110	NA	NA	202	195
	115	NA	NA	210	205
High Candela Range	135	NA	NA	228	207
	150	NA	NA	246	220
	177	NA	NA	281	251
	185	NA	NA	286	258

UL Max. Horn Current Draw (mA RMS)

		8–17.5 Volts		16–33 Volts	
Sound Pattern	dB	DC	FWR	DC	FWR
Temporal	High	57	55	69	75
Temporal	Medium	44	49	58	69
Temporal	Low	38	44	44	48
Non-Temporal	High	57	56	69	75
Non-Temporal	Medium	42	50	60	69
Non-Temporal	Low	41	44	50	50
Coded	High	57	55	69	75
Coded	Medium	44	51	56	69
Coded	Low	40	46	52	50

UL Max. Current Draw (mA RMS), 2-Wire Horn Strobe, Standard Candela Range (15–115 cd)

	8–17.5 Volts		16–33 Volts						
DC Input	15	15/75	15	15/75	30	75	95	110	115
Temporal High	137	147	79	90	107	176	194	212	218
Temporal Medium	132	144	69	80	97	157	182	201	210
Temporal Low	132	143	66	77	93	154	179	198	207
Non-Temporal High	141	152	91	100	116	176	201	221	229
Non-Temporal Medium	133	145	75	85	102	163	187	207	216
Non-Temporal Low	131	144	68	79	96	156	182	201	210
FWR Input									
Temporal High	136	155	88	97	112	168	190	210	218
Temporal Medium	129	152	78	88	103	160	184	202	206
Temporal Low	129	151	76	86	101	160	184	194	201
Non-Temporal High	142	161	103	112	126	181	203	221	229
Non-Temporal Medium	134	155	85	95	110	166	189	208	216
Non-Temporal Low	132	154	80	90	105	161	184	202	211

UL Max. Current Draw (mA RMS), 2-Wire Horn Strobe, High Candela Range (135–185 cd)

	16–33 Volts					16–33 Volts			
DC Input	135	150	177	185	FWR Input	135	150	177	185
Temporal High	245	259	290	297	Temporal High	215	231	258	265
Temporal Medium	235	253	288	297	Temporal Medium	209	224	250	258
Temporal Low	232	251	282	292	Temporal Low	207	221	248	256
Non-Temporal High	255	270	303	309	Non-Temporal High	233	248	275	281
Non-Temporal Medium	242	259	293	299	Non-Temporal Medium	219	232	262	267
Non-Temporal Low	238	254	291	295	Non-Temporal Low	214	229	256	262

Candela Derating

For K series products used at low temperatures, listed candela ratings must be reduced in accordance with this table.

Strobe Output (cd)

Listed Candela	Candela rating at –40°F
15	Do not use below 32°F
15/75	
30	
75	44
95	70
110	110
115	115
135	135
150	150
177	177
185	185

Horn Tones and Sound Output Data

Horn and Horn Strobe Output (dBA)

			8–17.5 Volts		16–33 Volts		24-Volt Nominal			
							Reverberant		Anechoic	
Switch Position	Sound Pattern	dB	DC	FWR	DC	FWR	DC	FWR	DC	FWR
1	Temporal	High	78	78	84	84	88	88	99	98
2	Temporal	Medium	74	74	80	80	86	86	96	96
3	Temporal	Low	71	73	76	76	83	80	94	89
4	Non-Temporal	High	82	82	88	88	93	92	100	100
5	Non-Temporal	Medium	78	78	85	85	90	90	98	98
6	Non-Temporal	Low	75	75	81	81	88	84	96	92
7†	Coded	High	82	82	88	88	93	92	101	101
8†	Coded	Medium	78	78	85	85	90	90	97	98
9†	Coded	Low	75	75	81	81	88	85	96	92

†Settings 7, 8, and 9 are not available on 2-wire horn strobe.

SpectrAlert Advance Diagrams

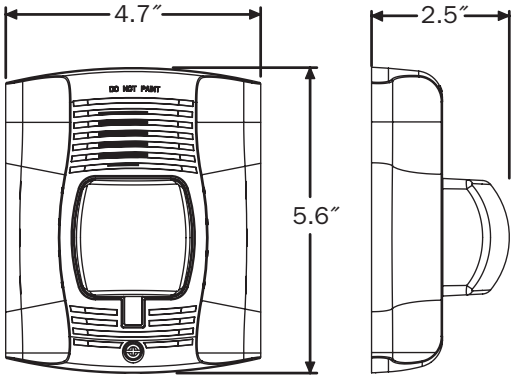

Wall-Mount Horn Strobes

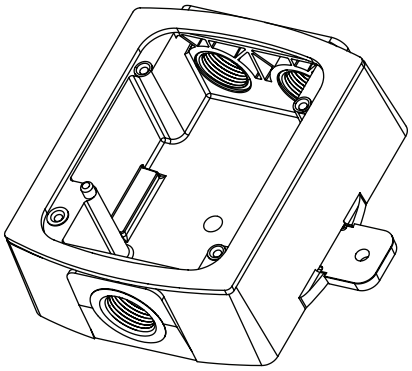

Wall Plastic Weatherproof Back Box

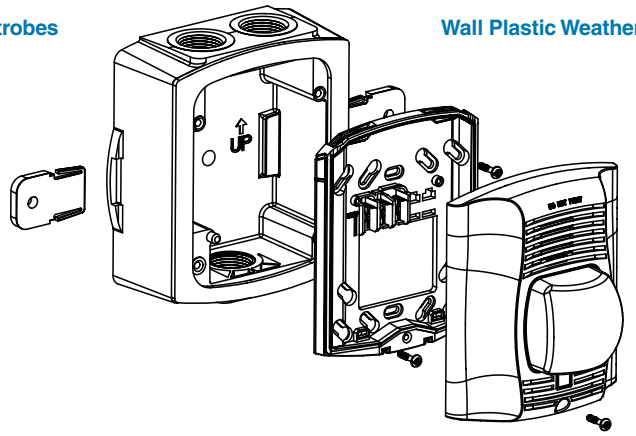

Wall-Mount Horn Strobe with Plastic Weatherproof Back Box

SpectrAlert Advance Ordering Information

Model	Description
Wall Horn Strobes	
P2RK*†	2-Wire Horn Strobe, Standard cd, Red, Outdoor (includes plastic weatherproof back box)
P2RHK*†	2-Wire Horn Strobe, High cd, Red, Outdoor (includes plastic weatherproof back box)
P2WK*†	2-Wire Horn Strobe, Standard cd, White, Outdoor (includes plastic weatherproof back box)
P2WHK*†	2-Wire Horn Strobe, High cd, White, Outdoor (includes plastic weatherproof back box)
P4RK†	4-Wire Horn Strobe, Standard cd, Red, Outdoor (includes plastic weatherproof back box)
P4WK	4-Wire Horn Strobe, Standard cd, White, Outdoor (includes plastic weatherproof back box)
P2RHK-120	2-Wire Horn Strobe, High cd, Red, Outdoor, 120 V (includes plastic weatherproof back box)
Wall Strobes	
SRK*†	Strobe, Standard cd, Red, Outdoor (includes plastic weatherproof back box)
SRHK*†	Strobe, High cd, Red, Outdoor (includes plastic weatherproof back box)
SWK*†	Strobe, Standard cd, White, Outdoor (includes plastic weatherproof back box)
SWHK*†	Strobe, High cd, White, Outdoor (includes plastic weatherproof back box)
Horns	
HRK†	Horn, Red, Outdoor (includes plastic weatherproof back box)
Accessories	
SA-WBB	Red, Metal Weatherproof Back Box
SA-WBBW	White, Metal Weatherproof Back Box

Notes:
* Add "-P" to model number for plain housing (no "FIRE" marking on cover), e.g., P2RK-P.
† Add "-R" to model number for weatherproof replacement device (no back box included), only for use with weatherproof outdoor flush mounting plate, WTP and WTPW.
"Standard cd" refers to strobes that include 15, 15/75, 30, 75, 95, 110, and 115 candela settings. "High cd" refers to strobes that include 135, 150, 177, and 185 candela settings. **When replacing standard outdoor units both the device and back box must be replaced.**

SYSTEM SENSOR®
3825 Ohio Avenue • St. Charles, IL 60174
Phone: 800-SENSOR2 • Fax: 630-377-6495

©2012 System Sensor.
Product specifications subject to change without notice. Visit systemsensor.com for current product information, including the latest version of this data sheet.
AVDS01201 • 3/12

DTK-DF120S1

Series Connected Surge Protector with Dry Contacts and Audible Alarm

Visual, audible, smart. **DITEK's DTK-DF120S1** sets a new standard for 120V AC power surge protection. Its patented design provides maximum critical load protection by minimizing AC supply voltage spikes and isolating incoming surges that originate from lightning or other sources. Each DF Series module features an LED health status indicator that flashes and sounds an audible alarm when protection has been compromised; and the devices wall-mountable box includes dry contacts for remote notification when service is required.

Product Features

- Protects 120VAC Single Phase Critical Loads
- Audible alarm sounds when protection is compromised or protection module is removed
- Rapid-Replacement modules for ease of installation.
- Dry contacts for remote notification when service is required
- UL1283 EMI/RFI noise filtering ensures clean power for connected equipment
- Separate LED indicators for power, ground and protection status
- Multi-stage hybrid circuit design for fast response and best protection
- Accepts both flexible and rigid conduit
- No additional enclosure required

Applications

- Fire Alarm Panels and Control Panels
- Electronic Fueling Equipment and Tank Monitors
- POS Devices and Lottery Machines
- Home Automation Systems

Accessories

- Replacement Module – Part Number DTK-DF120M

Technical Specifications

Service Voltage:	120VAC Single Phase
MCOV:	150VAC
Protection Modes:	L-G, L-N, N-G
Voltage Protection Rating:	700V L-G, 700V L-N, 1,200V N-G
Surge Current Rating:	50,000 Amps
Max. Continuous Current:	20 Amps
SCCR:	10kA
Nominal Discharge Current Rating (In):	10kA
Operation Frequency:	40Hz – 400Hz
EMI/RFI Filtering Attenuation:	Up to 35dB, 100kHz -100MHz
Audible Alarm Sound Level:	80dB @ 1' (MAX)

Mechanical Characteristics

Connection Method:	Hardwired, series configuration Use ¾" NPT Conduit Fittings
Housing:	ABS
Operating Temperature:	-13°F - 140°F (-25°C - 60°C)
Maximum Humidity:	95% non-condensing
Dimensions:	6.6"L x 5.4"W x 2.6"H (168mm x 137mm x 66mm)
Weight:	15.5oz (.44kg)

Quality, Standards & Approval

Agency Approvals:	UL1449 Listed, cUL, UL1283
SPD Type:	Type 2 SPD
Standards Compliance:	IEEE C62.41.1 –2, IEEE C62.45
Warranty:	Ten Year Limited Warranty

Every precaution has been taken to ensure that this literature is accurate and complete. DITEK Corporation assumes no responsibility and disclaims all liability for damages resulting from the use of this information or for any errors or omissions.

One DITEK Center 1720 Starkey Road - Largo, FL 33771
Phone: 1-800-753-2345 Direct: 727-812-5000
Technical Support: 1-888-472-6100
www.diteksurgeprotection.com

Doc. Number: SPS-100095-001 Rev 4 02/19
©2019 DITEK Corp.

015

Transient Voltage
Surge Suppressors By:

CLC##A2-B

Terminal Block Connected Current Loop Protection

Surge Suppression® Incorporated
Manufacturer and Supplier of Quality TVSS Systems

Made in the USA

"Our Name Says It All"

P.O. Box 1212
Destin, FL 32540-1212
Phone: 888-987-8877
Fax: 888-900-8879
www.surgesuppression.com

The CL Series devices are designed to protect highly sensitive current loop circuits, signal lines and/or low speed data lines feeding: transducers, leak detectors, flow meters and a broad variety of similar sensory devices from damage due to surges. These devices are series connected using either terminal strips or wires provided (optional), making your installation a breeze. A ground lug is provided on the top of the unit to insure a low impedance ground discharge path.

The unique design of these devices makes them among the most versatile SPD devices on the market with superior performance specs and a warranty that is second to none.

GENERAL

Description:	Series wired transient voltage surge suppressor with **O**ptimal **R**esponse **N**etwork™ circuitry for protection of current loop circuits, signal lines and other low speed data circuits.
Application:	Designed for use with data collection and switching circuits to protect data transmission system equipment from damaging transients generated between terminals and equipment in the data collection/transmission system.
Warranty:	**25 Years Unlimited Free Replacement**
Unit Listing:	Listed to UL497B

MECHANICAL

Enclosure:	Plastic, UL 94 V-0
Mounting:	External mounting feet / DIN mounting feet (DIN option)
Connection Method:	Terminals strips (standard) or integrated wire leads (W option) located at the input and output sides of the device. [Terminal strip wire range: # 14-22 AWG], **or** # 18 AWG integrated wire leads provided (W option).
Grounding Method:	#10/32 Ground stud for # 6-12 AWG wire.
Shipping Weight:	**<** 1 lbs

CIRCUITRY

Circuit Design:	Series wired hybrid design incorporating discrete all mode protection and utilizing our encapsulated **O**ptimal **R**esponse **N**etwork™ design to provide lowest possible let-through voltages. All suppression circuits are encapsulated in our high dielectric compound to promote long component life and protection from the environment and/or vibration.
Protection Modes:	Dedicated protection components and circuitry for each mode. Discrete L-L (Normal Mode) and L-G (Common Mode)

PERFORMANCE

Nominal Operating Voltages:	See Table on back
Maximum Continuous Operating Current:	500 mA
Frequency Range:	DC to 20 MHz
Maximum Data Rate:	Up to 2 Mbps
Series Resistance:	5 Ohms per wire (10 Ohms loop)
Peak Surge Current per Pair:	L-L 10 kA, L-G 10 kA

We are the premier customer service oriented company in the industry as demonstrated by being awarded the 2006 TVSS Customer Value Enhancement Award from Frost & Sullivan. Our manufacturing facility is also one of the few in the industry to be ISO-9001 certified by National Quality Assurance USA.

Because we are constantly seeking to improve our products, specifications are subject to change at any time.
© 2010 Surge Suppression Incorporated®. Specification Last Changed: 12/23/2010

Let-Through Voltages Using ANSI/IEEE C62.45 & C62.41 Test Environment: Static, positive polarity. All voltages are peak (±10%).			
Model	**Maximum Continuous Operating Voltages**	**Test Mode**	**Cat. B Impulse Wave 6 kV, 3 kA**
CLC5A2-B	7.5 V 15 V	L-G L-L	< 20 < 20
CLC12A2-B	24 V 48 V	L-G L-L	< 30 < 30
CLC24A2-B	36 V 72 V	L-G L-L	< 40 < 40
CLC48A2-B	62 V 124 V	L-G L-L	< 80 < 80
CLC140A2-B	200 V 400 V	L-G L-L	< 220 < 220

C may be replaced with W for wires instead of terminals

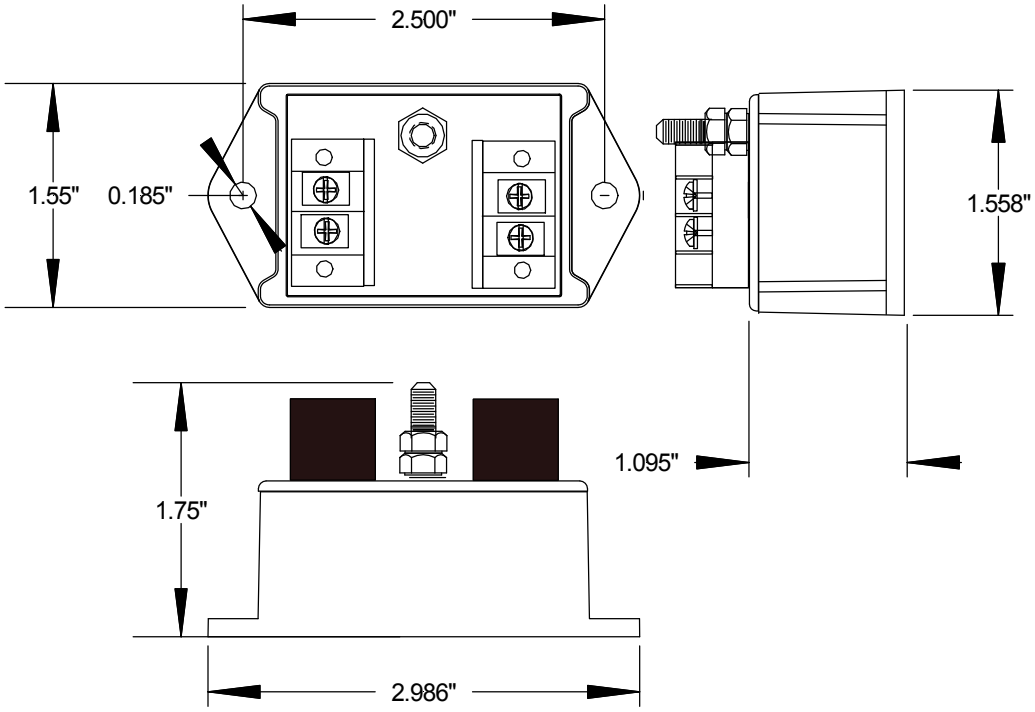

S-CL24-2 shown
Wired (W) and DIN (DIN) option not pictured

Actual unit may vary from picture

We are the premier customer service oriented company in the industry as demonstrated by being awarded the 2006 TVSS Customer Value Enhancement Award from Frost & Sullivan. Our manufacturing facility is also one of the few in the industry to be ISO-9001 certified by National Quality Assurance USA.

Because we are constantly seeking to improve our products, specifications are subject to change at any time.
© 2010 Surge Suppression Incorporated®. Specification Last Changed: 12/23/2010

Transient Voltage Surge Suppressors By:

S-SPT###-x

Series Wired AC Unit with Sine Wave Tracking and Discrete All-Mode Protection

Surge Suppression® Incorporated

Manufacturer and Supplier of Quality TVSS Systems

Made in the USA

C US*

"Our Name Says It All"

P.O. Box 1212
Destin, FL 32540-1212
Phone: 888-987-8877
Fax: 888-900-8879
www.surgesuppression.com

The S-SPT###-x devices provide the most unique transient protection available for serial connected individual equipment applications. Models are available in many electrical configurations for single phase configurations. These products provide protection at locations feeding sensitive, mission critical equipment. These models are extremely effective in limiting transients generated at the facility and are strong enough for first line protection of connected equipment. All models are rated with a robust 120 kA per phase peak surge current rating.

These devices are compact in size which makes installation a breeze and the warranty is the best in the industry. Add to all that, encapsulated **O**ptimal **R**esponse **N**etwork™ circuitry and you get a device that defines effective and reliable surge suppression.

Our customers testify that we offer the most versatile SPD devices on the market with superior performance specs and a warranty that is second to none.

GENERAL

Description:	Series connected transient voltage surge suppressor with encapsulated **O**ptimal **R**esponse **N**etwork™ circuitry (40 kA per mode / 120 kA total peak surge current) and **E**nhanced **S**inewave **T**racking® for virtual elimination of ring wave type transients.
Application:	Designed for use at ANSI/IEEE Categories A, B, and C with susceptibility up to all exposure levels to protect sensitive/critical loads fed by a single electrical circuit.
Warranty:	**25 Year Unlimited Free Replacement**
Unit Certification:	Recognized Component under *ANSI/UL 1449-2006 (3rd Edition) by CSA (CSA MC#241804); UL1283 and CE Compliant* (Type 2 Only)

MECHANICAL

Enclosure:	Plastic, UL 94V-5VA
Mounting:	External mounting feet. Din rail mounting feet (DIN option)
Connection Method:	3-position screw terminal strips on the line / equipment sides of the device. (wire connections are also available)
Shipping Weight:	**<** 2 lbs

ELECTRICAL

Circuit Design:	Series connected hybrid design incorporating discrete all mode protection and utilizing our encapsulated **O**ptimal **R**esponse **N**etwork™and optional **E**nhanced **S**inewave **T**racking® circuitry design to provide lowest possible let-through-voltages. All suppression circuits are encapsulated in our high dielectric compound to promote long component life and protection from the environment and /or vibration. All circuits include Component Level / Thermal Fusing.
Protection Modes:	Dedicated protection circuitry for every possible mode. Discrete L-N (Normal Mode), and Discrete L-G, N-G (Common Mode)
Input Power Frequency:	50-60 Hz
Current & Voltage Configurations:	15 & 30 Amps with various models up to 480 V AC/DC (Other voltages & configurations available upon request)
Peak Surge Current:	40 kA per mode / 120 kA total PSC
Circuit Diagnostics:	Green LED, normally on.
Circuit Interrupt:	External (see installation instructions for details).

We are the premier customer service oriented company in the industry as demonstrated by being awarded the 2006 TVSS Customer Value Enhancement Award from Frost & Sullivan. Our manufacturing facility is also one of the few in the industry to be ISO-9001 certified by National Quality Assurance USA.

Because we are constantly seeking to improve our products, specifications are subject to change at any time.

© 2010 Surge Suppression Incorporated®. Specification Last Changed 08/04/2010

LET-THROUGH VOLTAGE PERFORMANCE AND ELECTRICAL SPECIFICATIONS

Model	MCOV	Mode	ANSI/IEEE C62.41.1 & .2-2002 and C62.45-2002 Let-through Voltage Test Results Cat A, 30 Ω 100 kHz Ring Wave 2 kV / 67 A @ 270° Phase Angle	ANSI/UL 1449-2006 (Third Edition) Voltage Protection Rating (VPR)
*S-SPT120-x	150	P-N	16 (D)	500
	150	P-G	50 (D)	500
	150	N-G	32 (S)	500
*S-SPT240-x	320	P-N	16 (S)	900
	320	P-G	50 (S)	900
	320	N-G	32 (S)	900
*S-SPT277-x	320	P-N	35 (S)	900
	320	P-G	87 (S)	900
	320	N-G	61 (S)	900
S-SPT480-x	550	P-N	35 (S)	N/A
	550	P-G	87 (S)	
	550	N-G	61 (S)	

Let-Through Voltage Test Environment: All tests are dynamic (D) except for those marked (S) which are static. All voltages are peak (±10%). Tests performed at 270 degrees are measured from the insertion point to the peak of the surge. Tests performed at 90 degrees are measured from the peak of the AC sine wave to the peak of the surge. All tests were performed with the device connected in series simulating actual installation. Time base=10 μs.

* CSA Recognized Component

Model Number Selection Format

Configuration	Voltage
SPT – Terminals, Sinewave Tracking **SP** – Wires, Sinewave Tracking	15 to 480 (AC) 15 to 480 (DC) Specify DC in model by putting "DC" after number
Remove T from model # – Wires instead of terminals	Models may reflect commonly used voltages or increments of 10.

Typical Model Breakdown	Amperages (-x)
S-SPT120-30 (Sine Wave Tracking, Terminal Connected, 120 VAC, and 30 Amps)	15 30

Options (Suffix)

Designator:	Feature:
EAC	External Audible Alarm Module
C	Dry Relay Contacts
LP	Remotely mounted NEMA-4X LED(s)
N	No Neutral-to-Ground Sinewave Tracking Filter
Special Options	
DIN	DIN rail mounting
RJnn	Modular ISDN Grade Telecom Circuit Protection (nn = 11, 14, 45, etc.)
P	Parallel connected (The P suffix replaces the amperage)
T	130 Vmcov MOVs (120 VAC models only) – non UL
WX	NEMA 4X housing

Special lead lengths are available upon request (Ex.: -48IN = 48" leads)

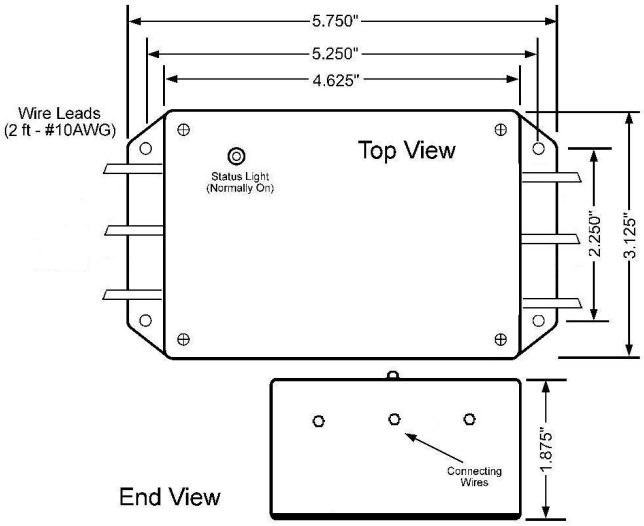

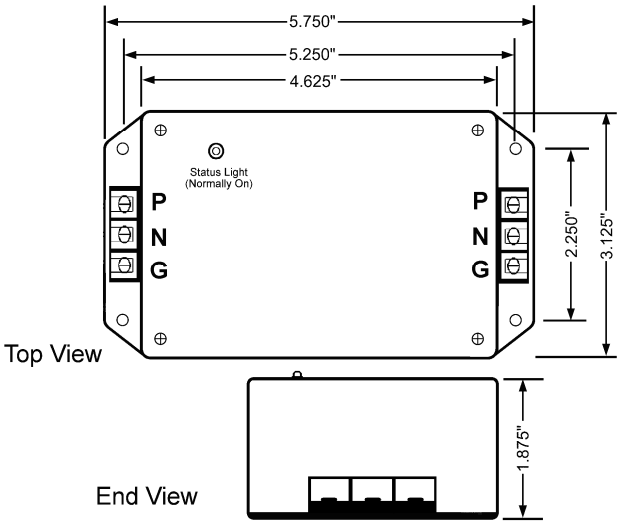

Actual unit may vary from picture.

We are the premier customer service oriented company in the industry as demonstrated by being awarded the 2006 TVSS Customer Value Enhancement Award from Frost & Sullivan. Our manufacturing facility is also one of the few in the industry to be ISO-9001 certified by National Quality Assurance USA.

Because we are constantly seeking to improve our products, specifications are subject to change at any time.

© 2010 Surge Suppression Incorporated®. Specification Last Changed 08/04/2010

Multi-Conductor, Shielded, Non-Plenum

NEC Type FPLR and CL3R, NEC/CEC Type CMR

Product Construction:

Conductor:

- 22 thru 12 AWG fully annealed solid bare copper per ASTM B3

Insulation:

- Premium-grade, color-coded S-R PVC
- Color code: See chart below

Shield:

- Overall Flexfoil® polyester supported aluminum foil
- Stranded tinned copper drain wire

Jacket:

- Premium-grade PVC, red
- Temperature range: -20°C to +75°C
- Sequential footage markings to facilitate installation
- Includes ripcord

Applications:

- Wiring of fire alarms
- Smoke alarms
- Voice communications
- Burglar alarms
- Fire protective circuits
- Suggested voltage rating: 300 volts

Compliances:

- NEC Article 760 Type FPLR (UL: 75°C, 300 V)
- NEC Article 725 Type CL3R (UL: 75°C, 300 V)
- NEC Article 800 Type CMR (UL: 75°C, 300 V)
- Suitable for use in the State of California
- RoHS Compliant Directive 2011/65/EU
- Designed to meet UL 1666 Flame Test

Packaging:

- Please contact Customer Service for packaging and color options

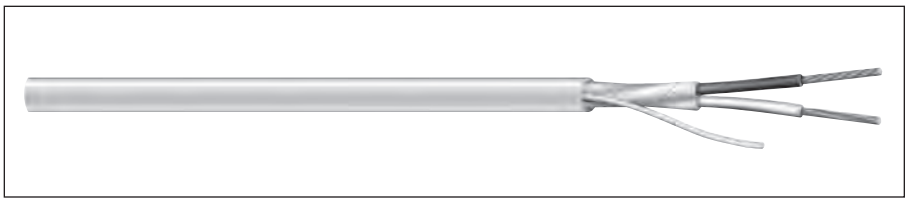

CATALOG NUMBER	NO. OF COND.	AWG SIZE	COND. STRAND	NOM. INSULATION THICKNESS		NOM. JACKET WALL		NOMINAL O.D.	
				in	mm	in	mm	in	mm
E2482S	2	22	Solid	0.010	0.25	0.015	0.38	0.126	3.20
E2484S	4	22	Solid	0.010	0.25	0.015	0.38	0.145	3.68
E2502S	2	18	Solid	0.010	0.25	0.015	0.38	0.158	4.01
E2503S	3	18	Solid	0.010	0.25	0.015	0.38	0.165	4.19
E2504S	4	18	Solid	0.010	0.25	0.015	0.38	0.183	4.65
E2506S	6	18	Solid	0.010	0.25	0.015	0.38	0.216	5.49
E2508S	8	18	Solid	0.010	0.25	0.015	0.38	0.235	5.97
E2522S	2	16	Solid	0.010	0.25	0.015	0.38	0.180	4.57
E2524S	4	16	Solid	0.010	0.25	0.015	0.38	0.210	5.33
E2532S*	2	14	Solid	0.013	0.33	0.015	0.38	0.218	5.54
E2534S*	4	14	Solid	0.013	0.33	0.015	0.38	0.253	6.43
E2542S*	2	12	Solid	0.013	0.33	0.015	0.38	0.252	6.40
E2544S*	4	12	Solid	0.013	0.33	0.015	0.38	0.293	7.44

* NEC FPLR/CL3R only.
Data subject to change.

Color Code Chart

NO. OF COND.	COLOR
1	Black
2	Red
3	Brown
4	Blue
5	Orange
6	Yellow
7	Purple
8	Gray

General Cable

RoHS Compliant Directive 2011/65/EU

Designed to Meet UL 1666 Flame Test
Underwriters Laboratories Inc.

UL LISTED

CAROL BRAND