INCH-POUND
GL-PD-06-05B
9 March 2015
SUPERSEDING
GL-PD-06-05A
October 23, 2013

PURCHASE DESCRIPTION

JACKET, SOFT SHELL COLD WEATHER (GEN III)

This Purchase Description is approved for use by all Departments and Agencies of the Department of Defense (DoD).

1. SCOPE

1.1 Scope. This purchase description covers the requirements for a soft shell jacket, which serves as a layer of the GEN III Extended Cold Weather Clothing System (ECWCS).

1.2 Classification. The jacket will be of the following types, classes, and sizes, as specified.

1.2.1 Types.

Type I - Plain weave, stretch, nylon and spandex cloth
Type II - Twill weave, aramid, cellulosic, synthetic cloth

1.2.2 Classes.

Class 1 - Universal Camouflage Pattern (UCP)
Class 2 - Operation Enduring Freedom Camouflage Pattern (OEF-CP)
Class 3 - Operational Camouflage Pattern (OCP)

1.2.3 Schedule of sizes.

SCHEDULE OF SIZES

X-Small	Small	Medium	Large	X-Large	XX-Large
Short	Short	-	-	-	-
Regular	Regular	Regular	Regular	Regular	Regular
-	Long	Long	Long	Long	Long
-	-	-	-	X-Long	X-Long

2. APPLICABLE DOCUMENTS

Comments, suggestions, or questions on this document should be addressed to: Department of the Army, Natick Soldier Research, Development and Engineering Center, 15 Kansas St., Natick MA 01760. ATTN: RDNS-SEW-EWC.

FSC 8415

2.1 General. The documents listed in this section are specified in sections 3, 4, or 5 of this specification. This section does not include documents cited in other sections of this specification or recommended for additional information or as examples. While every effort has been made to ensure the completeness of this list, document users are cautioned that they must meet all specified requirements of documents cited in sections 3, 4, or 5 of this specification, whether or not they are listed.

2.2 Government documents.

2.2.1 Specifications, standards, and handbooks. The following specifications, standards, and handbooks form a part of this document to the extent specified herein. Unless otherwise specified, the issues of these documents are those cited in the solicitation or contract.

FEDERAL STANDARDS

FED-STD-4 - Glossary of Fabric Imperfections

COMMERCIAL ITEM DESCRIPTIONS

A-A-55126 - Fastener Tapes, Hook and Loop, Synthetic
A-A-55634 - Zipper, (Fastener, Slide Interlocking)
A-A-59826 - Thread, Nylon

DEPARTMENT OF DEFENSE SPECIFICATIONS

MIL-DTL-10884 - Fasteners, Snap
MIL-DTL-32075 - Label: For Clothing, Equipage, and Tentage, (General Use)
MIL-PRF-5038 - Tape, Textile and Webbing, Textile, Reinforcing Nylon
MIL-W-5664 - Webbing, Textile, Elastic

(Copies of these documents are available online at https://assist.dla.mil/ or from the Standardization Document Order Desk, 700 Robbins Avenue, Building 4D, Philadelphia, PA 19111-5094.)

2.2.2 Other Government documents, drawings, and publications. The following other Government documents, drawings, and publications form a part of this document to the extent specified herein. Unless otherwise specified, the issues are those specified in the solicitation or contract.

DRAWINGS

U.S. ARMY NATICK SOLDIER RESEARCH, DEVELOPMENT AND ENGINEERING CENTER

2-1-2519 - Universal Camouflage, ARPAT, 3-Color
2-1-2592 - Operational Camouflage Pattern (OCP)

NOTE: For any other camouflage patterns noted in the solicitation and contract, please contact contracting activity and the necessary samples, drawings and or patterns will be provided.

(Copies of drawings are available from the U.S. Army Natick Soldier Research Development and Engineering Center, 15 Kansas Street, Natick, MA 01760-5019 ATTN: RDNS-SEW-EWC)

CODE OF FEDERAL REGULATIONS

16 CFR Part 1500 – Federal Hazardous Substances Act Regulations
29 CFR Part 1910 – Occupational Safety and Health Standards

(Copies of these documents are available online at: http://www.access.gpo.gov or from the, U.S. Government Printing Office, 732 North Capitol St., N.W., Washington, DC 20401.)

PURCHASE DESCRIPTIONS

CO/PD-06-05 - Patch and Brassard, Identification, Infrared Retroreflective

(Copies of purchase descriptions, specifications, standards, drawings and publications required by contractors in connection with specification procurement functions should be obtained from the procuring activity or as directed by the Contracting Officer.)

2.3 Non-Government publications. The following documents form a part of this document to the extent specified herein. Unless otherwise specified, the issues of these documents are those cited in the solicitation or contract.

AEROSPACE INDUSTRIES ASSOCIATION OF AMERICA INC.

AIA/NAS NASM 20652/1B - Eyelets, Metallic, and Eyelet Washers, Metallic

(Copies are available online at http://www/aia-aerospace.org or from the Aerospace Industries Association of America Inc, 1000 Wilson Boulevard, Suite 1700, Arlington, VA 22209-3928 or from the IHS Standards Store at http://aero-defense.ihs.com/documents)

AMERICAN ASSOCIATION OF TEXTILE CHEMISTS AND COLORISTS (AATCC)

AATCC Test Method - 8 - Colorfastness to Crocking: AATCC Crockmeter Method
AATCC Test Method - 15 - Colorfastness to Perspiration
AATCC Test Method - 16.2 - Colorfastness to Light: Carbon-Arc
AATCC Test Method - 16.3 - Colorfastness to Light: Xenon-Arc
AATCC Test Method - 20 - Fiber Analysis: Quantitative
AATCC Test Method - 22 - Water Repellency: Spray Test
AATCC Test Method - 61 - Colorfastness to Laundering: Accelerated
AATCC Test Method - 70 - Water Repellency: Tumble Jar Dynamic Absorption
AATCC Test Method - 96 - Dimensional Changes in Commercial Laundering of Woven and Knitted Fabrics, Except Wool
AATCC Test Method - 135 - Dimensional Changes of Fabrics after Home Laundering
AATCC Test Method - 150 - Dimensional Changes of Garments after Home Laundering

AATCC Evaluation Procedure 1 - Gray Scale for Color Change
AATCC Evaluation Procedure 2 - Gray Scale for Staining
AATCC Evaluation Procedure 8 - Chromatic Transference Scale, 9-Step
AATCC Evaluation Procedure 9 - Visual Assessment of Color Difference of Textiles

(Copies of are available online at http://www.aatcc.org or from the American Association of Textile Chemists and Colorists, P.O. Box 12215, Research Triangle Park, NC 27709-2215.)

AMERICAN SOCIETY FOR QUALITY

ANSI/ASQ Z1.4 - Sampling Procedures and Tables for Inspection by Attributes

(Copies are available online at http://www.asq.org or from the American Society for Quality, 600 North Plankinton Avenue, Milwaukee, WI 53203.)

ASTM INTERNATIONAL

ASTM D 276 - Standard Test Methods for Identification of Fibers in Textiles
ASTM D 737 - Standard Test Method for Air Permeability of Textile Fabrics
ASTM D 747 - Standard Test Method for Apparent Bending Modulus of Plastics by Means of a Cantilever Beam
ASTM D 751 - Standard Test Methods Coated Fabrics
ASTM D 1424 - Standard Test Method for Tearing Strength of Fabrics by Falling – Pendulum (Elmendorf Type) Apparatus
ASTM D 1776 - Standard Practice for Conditioning and Testing Textiles
ASTM D 3775 - Standard Test Method for Warp (End) and Filling (Pick) Fabric Count of Woven Fabric
ASTM D 3776 - Standard Test Method for Mass Per Unit Area (Weight) of Fabric
ASTM D 5034 - Standard Test Method for Breaking Strength and Elongation of Textile Fabrics (Grab Test)
ASTM D 6193 - Standard Practice for Stitches and Seams
ASTM E 96 - Standard Test Method for Water Vapor Transmission of Materials

(Copies of documents are available online at http://www.astm.org or from the ASTM International, 100 Barr Harbor Drive, P.O. Box C700, West Conshohocken, PA 19428-2959.)

OTHER PUBLICATIONS

Repeat Insult Patch Test – Modified Draize Procedure

Principles and Methods of Toxicology, (fourth edition) A Wallace Hayes (editor), pp 1057 – 1060, 2001

(Copies are available online at http://www.taylorandfrancis.co.uk/ or from Taylor and Francis, 325 Chestnut Street, Philadelphia PA 19106.)

2.4 Order of precedence. Unless otherwise noted herein or in the contract, in the event of a conflict between the text of this document and the references cited herein, the text of this

document takes precedence. Nothing in this document, however, supersedes applicable laws and regulations unless a specific exemption has been obtained.

3. REQUIREMENTS

3.1 First article. When specified (see 6.3), a sample shall be subjected to first article inspection (see 4.1).

3.2 Guide samples. Samples, when furnished, are solely for guidance and information to the contractor. Variations from the specification may appear in the sample in which case this specification shall govern.

3.3 Recycled, recovered, or environmentally preferable materials. Recycled, recovered, or environmentally preferable materials should be used to the maximum extent possible provided that the material meets or exceeds the requirements of this document and promotes economically advantageous life cycle costs.

3.4 Design. The soft shell jacket has a center front opening with a two (2)-way fastener closure and a front wind protection flap. It has a collar with a cover for an enclosed collapsible hood; a hood with a binding that covers an elastic cord that has cord lock adjustments; raglan sleeves with hook and loop pockets and slide fastener (zipper) opening for ventilation under the sleeve. Two (2) front pockets with slide fastener (zipper) openings and an elastic cord in the bottom hem for adjustability. All slide fasteners have a thong for ease of opening when wearing gloves. This design provides a garment that is light in weight, low in bulk, has environmental protection and comfort in movement (see figures 1, 2 and 3).

3.5 Basic materials.

3.5.1 Standard sample. All cloth materials shall match the applicable standard sample for shade and appearance on the face side, and shall be equal to or better than the standard sample with respect to all characteristics for which the standard sample is referenced (see 6.4).

3.5.1.1 Basic shell material (Type I). The cloth for Type I shall be a plain weave, stretch, nylon and spandex cloth (texture approximating 95 by 60 yarns per inch, warp and filling, respectively), with water repellency, meeting the performance requirements of Table I when tested as specified in Table VIII. The color of the cloth shall be Universal Camouflage Pattern (UCP) for Class 1, Operation Enduring Freedom Camouflage Pattern (OEF-CP) for Class 2 and Operational Camouflage Pattern (OCP) for Class 3.

3.5.1.2 Basic shell material (Type II). The cloth for Type II shall be a twill weave, aramid, cellulosic, synthetic cloth with water repellency, and shell meet the performance requirements of Table I when tested as specified in Table VIII. The color of the cloth shall be Universal Camouflage Pattern (UCP) for Class 1, Operation Enduring Freedom Camouflage Pattern (OEF-CP) for Class 2 and Operational Camouflage Pattern (OCP) for Class 3.

3.5.1.3 Physical requirements. The cloths shall conform to the physical requirements specified in Table I when tested in accordance to the test methods specified in Table VIII.

TABLE I. Basic shell material - physical requirements

Characteristic	Type I Requirement	Type II Requirement
Weight, oz/sq. yd (max.)		
Threshold	5.5	5.8
Objective	4.5	-
Breaking strength, lbs (min.)		
Warp, Objective	165	90
Warp, Threshold	145	-
Filling (min.)	130	130
Elongation, percent:		
Threshold -		
Warp	40-80	-
Filling	70-120	-
Objective -		
Warp	45-60	-
Filling	80-100	-
Tearing Strength, lbs. (min.)		
Warp	8.0	6.0
Filling	8.0	15.0
Air Permeability, cu.ft/sq.ft/min. (max)	5	10
Moisture vapor transmission Rate, $g/m^2/24h$ (min.)		
Threshold	600	900
Objective	1200	1200
Stiffness, in-lbs (max.)		
At 70ºF, Objective	0.001	0.001
Threshold	0.002	0.002
At 32ºF, Objective	0.001	0.001
Threshold	0.002	0.002
Blocking, rating (max.)	No. 2	No. 2
Water permeability, cm (min.) -		
Initial	30	20
Spray rating, rating		
Initial, and	100, 100, 90	100, 100, 90
After five (5) launderings	100, 90, 90	100, 90, 90
Resistance to organic liquid, pass/fail -		
Initial	No wetting	-

TABLE I. Basic shell material - physical requirements - Continued

Characteristic	Type I Requirement	Type II Requirement
Dynamic absorption, percent (max.)		
Threshold	25.0	20
Objective	4.0	4
Dimensional stability, percent (max.)		
Warp	5.5	3.5
Filling	5.0	2.5
Color & Colorfastness	See 3.5.1.4 - 3.5.1.4.3.1 and Table II	
Pattern Execution	See 3.5.1.5 - 3.5.1.4.3.1	
Spectral Reflectance	See 3.5.1.6 & Tables III, III.A and III.B	
Toxicity	1/ (see 3.12)	

1/ The finished cloth shall not present a dermal health hazard when used as intended.

3.5.1.4 Color.

3.5.1.4.1 Class 1, Universal Camouflage Pattern (UCP). The color of the cloth shall be Universal Camouflage Pattern and shall match Desert Sand 500, Urban Gray 501, and Foliage Green 502. Each area of the specific color of the pattern shall be in accordance with the applicable standard sample or drawing number 2-1-2519.

3.5.1.4.2 Class 2, Operation Enduring Freedom Camouflage Pattern (OEF-CP). The color of the face side of the cloth shall be Operation Enduring Freedom Camouflage Pattern (OEF-CP) dyed to a ground shade either matching or approximating Cream 524 and then shall be overprinted with the camouflage pattern. When the ground shade is dyed to match Cream 524, the remaining six (6) colors shall be printed as appropriate, for the Tan 525, Pale Green 526, Olive 527, Dark Green 528, Brown 529 and Dark Brown 530 areas of the pattern. When the ground shade is not dyed to approximate Cream 524 all seven (7) colors of the camouflage pattern shall be printed to match all seven (7) colors. Each area of the specific color of the pattern shall be in accordance with the applicable standard sample (see 6.4).

3.5.1.4.3 Class 3, Operational Camouflage Pattern (OCP). The color of the face side of the cloth shall be Operational Camouflage Pattern (OCP) dyed to a ground shade either matching or approximating Dark Cream 559 and then shall be overprinted with the camouflage pattern. When the ground shade is dyed to match Dark Cream 559, the remaining six (6) colors shall be printed as appropriate, for the Tan 525, Light Sage 560, Olive 527, Dark Green 528, Brown 529 and Bark Brown 561 areas of the pattern. When the ground shade is not dyed to approximate Dark Cream 559 all seven (7) colors of the camouflage pattern shall be printed to match all seven (7) colors. Each area of the specific color of the pattern shall be in accordance with the applicable standard sample or drawing number 2-1-2592.

3.5.1.4.3.1 Colorfastness. The colorfastness for finished Class 1 (UCP), Class 2 (OEF-CP), and Class 3 (OCP) cloths shall meet the requirements listed in Table II, when evaluated as specified in Table VIII.

TABLE II. Colorfastness requirements (Classes 1, 2 and 3)

Class	Colors Evaluation	Laundering (3 cycles) (min.) Color Change & Staining	Light (40 hrs or 170 kJ) (min.)	Perspiration (acid & alkaline) Color Change & Staining (min.)	Crocking (Wet & Dry) (min.)
Class 1 (UCP)	All colors	3-4	3-4	---	3.5
Class 2 (OEF-CP)	All colors	3-4	---	3-4	3.5
	Dk. Green 528, Brown 529, Dark Brown 530	---	3-4	---	---
	Cream 524, Tan 525, Pale Green 526, Olive 527	---	3	---	---
Class 3 (OCP)	All colors	3-4	---	3-4	3.5
	Dk. Green 528, Brown 529, Bark Brown 561	---	3-4	---	---
	Dark Cream 559, Tan 525, Light Sage 560 Olive 527	---	3	---	---

3.5.1.5 Pattern execution.

3.5.1.5.1 Class 1, Universal Camouflage Pattern (UCP). The Universal Camouflage Pattern (UCP) shall reproduce the standard sample in respect to design, colors and registration of the respective areas. The pattern repeat of the dyed, printed, and finished cloth shall be 36.00 inches (+1.25 inches, -2.50 inches) in the warp direction. The various areas of the pattern shall be properly registered in relation to each other and shall present definite sharp demarcations with a minimum of feathering or spew. Each pattern area shall show solid coverage; skitteriness exceeding that shown by the standard sample in any of the printed areas shall not be acceptable. When the standard sample is not referenced for pattern execution or design, a pattern drawing shall be provided, and the pattern on the finished cloth shall match that of Drawing 2-1-2519.

3.5.1.5.2 Class 2, Operational Freedom Camouflage Pattern (OEF-CP). The pattern on the printed finished cloth(s) shall reproduce the standard sample in respect to design, colors and registration of the respective areas. The pattern repeat of the Operational Freedom Camouflage Pattern (OEF-CP) shall be 25.255 (+1.25, -2.50) in the warp direction. The various areas of the pattern shall be properly registered in relation to each other and shall present definite sharp demarcations with a minimum of feathering or spew. Each pattern area shall show solid coverage; skitteriness exceeding that shown on the standard sample in any of the printed areas will not be acceptable. When the standard sample is not referenced for pattern execution, a pattern drawing provided by the Government at the time of award shall be used (see 2.2.2, 6.2, and 6.4).

3.5.1.5.3 Class 3, Operational Camouflage Pattern (OCP). The pattern on the printed finished cloth(s) shall reproduce the standard sample in respect to design, colors and registration of the respective areas. The pattern repeat of the Operational Camouflage pattern (OCP) shall be 25.255 (+1.25, -2.50) in the warp direction. The various areas of the pattern shall be properly registered in relation to each other and shall present definite sharp demarcations with a minimum of feathering or spew. Each pattern area shall show solid coverage; skitteriness exceeding that shown on the standard sample in any of the printed areas will not be acceptable. When the standard sample is not referenced for pattern execution or design, a pattern drawing shall be provided, and the pattern on the finished cloth shall match that of Drawing 2-1-2592.

3.5.1.5.3.1 Pattern width (filling direction for OCP Class). The maximum width of the camouflage printed area for Class 3 OCP shall be 68-inches in the filling direction.

3.5.1.6 Spectral reflectance.

3.5.1.6.1 Spectral reflectance, Class 1, Universal Camouflage Pattern (UCP). The spectral reflectance of the colors in the Universal Camouflage cloth shall conform to the requirements specified in Table III, when tested as specified in 4.6.8.

TABLE III. Spectral reflectance requirements: reflectance (percent) for Class 1

Universal Camouflage Pattern (UCP)						
Wavelength,	Desert Sand 500		Urban Gray 501		Foliage Green 502	
Nanometers (nm)	Min	Max	Min	Max	Min	Max
600	28	40	12	26	8	18
620	30	42	14	26	8	18
640	34	48	14	28	8	20
660	38	56	14	30	10	26
680	44	60	18	34	10	26
700	46	66	24	38	12	28
720	48	68	26	42	16	30
740	48	72	30	46	16	30
760	50	74	32	48	18	32
780	54	76	34	48	18	34
800	54	76	34	50	20	36
820	54	76	36	54	22	38
840	55	78	38	54	24	40
860	56	78	40	56	26	42

3.5.1.6.2 Spectral reflectance, Class 2, Operation Enduring Freedom Camouflage Pattern (OEF-CP). The spectral reflectance of the colors in the OEF-CP cloth shall conform to the requirements specified in Table III.A, when tested as specified in 4.6.8.

TABLE III.A. Spectral reflectance requirements: reflectance (percent) for Class 2

Operation Enduring Freedom Camouflage Pattern (OEF-CP)						
	Cream 524 Tan 525		Pale Green 526 Olive 527 Brown 529		Dark Green 528 Dark Brown 530	
Wavelength (nm)	Min	Max	Min	Max	Min	Max
600	22	44	10	30	3	12
620	24	45	11	30	3	12
640	24	45	11	32	4	12
660	25	45	12	32	4	13
680	28	48	14	35	4	18
700	28	54	19	40	6	25
720	30	58	22	43	6	27
740	32	60	25	46	10	29
760	36	61	27	48	14	33
780	38	62	28	50	18	36
800	40	62	29	50	20	37
820	44	65	30	51	20	38
840	46	66	32	51	21	39
860	48	67	33	52	21	40

3.5.1.6.3 Spectral reflectance, Class 3, Operational Camouflage Pattern (OCP). The spectral reflectance of the colors in the OCP cloth shall conform to the requirements specified in Table III.B, when tested as specified in 4.6.8.

TABLE III.B. Spectral reflectance requirements: reflectance (percent) for Class 3

Operational Camouflage Pattern (OCP)						
	Dark Cream 559 Tan 525		Light Sage 560, Olive 527, Brown 529		Dark Green 528 Bark Brown 561	
Wavelength (nm)	Min	Max	Min	Max	Min	Max
600	22	44	10	30	3	12
620	24	45	11	30	3	12
640	24	45	11	32	4	12
660	25	45	12	32	4	13
680	28	48	14	35	4	18
700	28	54	19	40	6	25
720	30	58	22	43	6	27
740	32	60	25	46	10	29
760	36	61	27	48	14	33
780	38	62	28	50	18	36

TABLE III.B Spectral reflectance requirements: reflectance (percent) for Class 3 - Continued

Operational Camouflage Pattern (OCP)						
	Dark Cream 559 Tan 525		Light Sage 560, Olive 527, Brown 529		Dark Green 528 Bark Brown 561	
Wavelength (nm)	Min	Max	Min	Max	Min	Max
800	40	62	29	50	20	37
820	44	65	30	51	20	38
840	46	66	32	51	21	39
860	48	67	33	52	21	40

3.5.2 Mesh tricot pocket lining. Lining fabric shall be tricot knit mesh of 100 percent polyester or equal. The color shall be Urban Gray 505 for Class 1 and Tan 499 for Class 2 and Class 3. The fabric cloth shall meet the physical requirements specified in Table IV and the colorfastness requirements of Table IV.A when tested as specified in Table VIII.

TABLE IV. Mesh tricot pocket lining - physical requirements (all classes)

Characteristics	Requirement
Weight (oz./sq yd)	2.0 (± 0.2)
Dimensional Stability, percent (max.)	
Warp Filling	5.0 5.0
Colorfastness:	See Table IVA
Toxicity	1/

1/ The finished cloth shall not present a dermal health hazard when used as intended.

TABLE IV.A. Colorfastness requirements, mesh tricot pocket lining (see 3.5.2) (all classes)

Class	Colors Evaluation	Laundering (3 cycles) Color Change & Staining (min.)	Light (40 hrs or 170 kJ) (min.)	Perspiration (acid & alkaline) Color Change & Staining (min.)	Crocking (Wet & Dry) (min.)
Class 1	Urban Gray 505	3-4	3-4	3-4	3.5
Class 2 (OEF-CP) & Class 3 (OCP)	Tan 499	3-4	---	3-4	3.5

3.6 Components.

3.6.1 Thread. The thread for all seaming and stitching shall be nylon conforming to A-A-59826, Type I, Tex size 45-46, 2 or 3 ply (Government size B) or Type II, Tex size 45-51, 2 or 3 ply (Government size B). As an alternate, bobbin/looper threads can be nylon, Type I Tex size 30-32, 2 or 3 ply (Government size AA) or Type II Tex size 30-36, 2 or 3 ply (Government size AA). The color shall be Foliage Green 504 for Class 1 and Tan 499 for Class 2 and Class 3, unless otherwise specified in the contract.

3.6.2 Identification friend or foe material. The IFF material shall conform to Type I of CO/PD-06-05.

3.6.3 Webbing/tape. Tape, MIL-PRF-5038, Type-III, 3/8-inch wide shall be used to construct the slide fastener thong and the retainer for the barrel lock, 1-inch wide shall be used to construct the shoulder pocket webbing tab. The color shall be Foliage Green 504 for Class 1 and Tan 499 for Class 2 and Class 3.

3.6.4 Tape, hook, and loop. The hook and loop fastener tape shall conform to Type II, Class 1 of A-A-55126, with selvage edges. No slit or split edges are permitted. Sew all hook and loop minimum of 1/8-inch from bound selvage to prevent needle cutting along edges. To prevent raveling, do not sew directly on selvage. However, each required width shall maintain a tolerance of (± 1/16) inch as to prevent stitching runoffs or improper fit into automatic sewing equipment. The color shall match Foliage Green 504 for Class 1 and Tan 499 for Class 2 and Class 3, unless otherwise specified in the contract.

3.6.4.1 Colorfastness, tape hook and loop. The colorfastness of the hook and loop tape shall meet the requirements as specified in A-A-55126.

3.6.4.2 Hook and loop laundry durability test method. When tested in accordance with 4.6.17, the hook and loop tapes shall not exhibit fraying edges, peeling yarns, or damage appearance that detracts from the tape appearance or durability.

3.6.5 Elastic cord. The elastic cord shall be 1/8-inch width (+1/32-inch, - 0 inch), elastic cord, elongation: 120 percent (± 10) percent; weight per linear yard, 0.2-ounces (maximum); picks per inch, 60 (minimum); number of carriers 16 (minimum); ends per carrier, 1; number of elastic strands, 12 (minimum); cover yarn, polyester. The elastic cord shall have a seared and knotted end. The color shall match Foliage Green 504 for Class 1 and Tan 499 for Class 2 and Class 3, unless otherwise specified in the contract. Testing shall be as specified in Table VIII and 4.6.

3.6.6 Elastic material. The elastic material used on the cuffs shall be in accordance with MIL-W-5664, Type II, 1-1/4-inch (± 1/16) inch wide. The elastic material may be Black or approximate Foliage Green 504 for Class 1 and Tan 499 for Class 2 and 3 conforming to the spectral reflectance requirements in Table III.A for Class 2 and Table III.B for Class 3 when tested as specified in 4.6.8.

3.6.7 Fastener, slide, interlocking. All slide fasteners shall conform to A-A-55634, with the types and styles as specified in 3.6.7.1 and 3.6.7.2. The color shall be Foliage Green 504 for Class 1 and Tan 499 for Class 2 and Class 3.

3.6.7.1 Front slide fasteners. Front closure slide fastener (zipper) shall be plastic individual element, Type III, Style 13 (separating double auto-lock sliders such that opens both from top and bottom), No. 5 chain with 100 pounds minimum crosswise strength with water repellent (WR) treated tape and thong on top slider. The color shall be Foliage Green 504 for Class 1 and Tan 499 for Class 2 and 3. Separating and disengaging slide fastener (zipper) should function in a smooth even manner with no hang-ups, jamming or reason to adjust slider position.

3.6.7.2 Side pocket and underarm slide fasteners (zippers). Side pocket and underarm slide fasteners (zippers) shall be A-A-55634, No 5 with 175 pounds minimum crosswise strength, continuous element reverse* chain, Type I, style 7, auto-lock slider with thong, closed top, closed bottom stop with Water Repellent (WR) treated tape. The color shall be Foliage Green 504 for Class 1 and Tan 499 for Class 2 and 3. Pulling up on slider closes side pocket and pulling towards front closes underarm slide fasteners (zippers). *Reverse chain is when zipper tape side and slider pull represents face.*

3.6.8 Barrel lock. The barrel locks shall maintain a 3-pound minimum holding strength on elastic cord (see 3.6.5) at –40°F, 70°F and 140°F when tested in accordance with 4.6.11. The barrel lock shall be 1/2-inch by 3/8-inch elliptical or 3/8-inch round shape, minimum push-button size. The color shall match Foliage Green 504 for Class 1 and Tan 499 for Class 2 and 3.

3.6.9 Snap fasteners. Snap fasteners shall conform to MIL-DTL-10884 Style 2A. The snap fasteners shall have a black chemical finish, except the button cap shells may have a Foliage Green 504 for Class 1 and Tan 499 for Class 2 and 3, baked-on enamel finish. The enamel shall be uniformly coated over the top surface of the shell including the visible portion of the edge. The gloss for the black chemical finish and the enamel finish shall be no more than 40. The enamel shall be capable of withstanding attachment operations without removal of any enamel. The enamel coating shall be smooth and free of sags, runs, and streaks.

3.6.10 Eyelets. The eyelets used on each side of the hood and in the hem shall be in accordance with NASM-20652/1B, aluminum or brass and have an internal diameter of 0.156 inch to 0.200 inch (dash No. ABE-102) or as an alternate BBE-114 may be used. The color shall be Foliage Green 504 for Class 1 and Tan 499 for Class 2 and 3.

3.6.11 Cannon clip. The cannon clip used in the back of the hood, shall be Foliage Green 504 for Class 1 and Tan 499 for Class 2 and 3 and shall be equal to or better than Part #743-0125 of ITW Nexus.

3.6.12 Grommet**.** The grommet used in the back of the hood shall be in accordance with Type III, Class 3, size zero (0) of NASM-16491. The color shall be Foliage Green 504 for Class 1 and Tan 499 for Class 2 and 3.

3.6.13 Interfacing. The interfacing fabric shall be 100 percent polyester, non-woven, mid weight fusible interfacing.

3.6.14 Binding tape. The binding tape shall be a lightweight (approximately 2 ounces per square yard), plain or twill weave polyester or nylon lining bias slit. The color shall be Foliage Green 504 for Class 1 and Tan 499 conforming to the spectral reflectance requirements of Table

III.A for Class 2 and Table III.B for Class 3. The width shall be such to conceal the slide fastener tape and not impede the slide fastener operation.

3.7 Construction. See figures 1- 4 and patterns for details.

3.7.1 Front slide fastener (zipper) (left pin side) – Pre-sew 2-inch by 2-inch loop tape onto face and 4 5/8-inch by 2-inch loop tape strips onto back of slide fastener (zipper) cover per pattern placement, insert interfacing and sew ends with SSe-2. Set socket snap into base of cover per pattern placement. Top stitch around three (3) sides, 1/16-inches from edge. Sew slide fastener (zipper) tape binding with seam BSb-1. Sew zipper tape, double layer of tricot knit pocketing to outer-shell with SSa-1, turn, place on slide fastener (zipper) cover and sew with LSq-2 through all layers into inner binding. On upper 4-inches of slide fastener (zipper), tape will be inserted between outer and inner hide-away hood assembly. Finished slide fastener (zipper) cover should extend 1-inch nominal from edge of slide fastener (zipper) teeth.

3.7.1.1 Front slide fastener (zipper) (right pin side). Insert interfacing into slide fastener (zipper) backing strips and sew with SSe-2 with four (4) topstitching lines done 1/4-inch apart. Sew outer-shell to slide fastener (zipper) tape and overstitch with double layer tricot knit pocketing, binding tape and slide fastener (zipper) cover with SSa-1. Turn and topstitch outer-shell 1/16-inch from edge adjacent to slide fastener (zipper) tape. Slide fastener (zipper) backing shall protrude 3/4-inch nominal from slide fastener (zipper) teeth edge. Set stud portion of snap per pattern placement. Sew four (4), 5/8-inch by 2-inch hook tapes per pattern placement. When slide fastener (zipper) is engaged, finished appearance should slide fastener (zipper) cover flat and even with no puckering with bottom snap, hook and loop strips and left and right side of hem even and in alignment.

3.7.1.2 Underarm slide fasteners (zippers). Slide Fastener (zipper) to be applied in outer triangle underarm seam per pattern placement. Fold slide fastener (zipper) backing strip longitudinally in half and topstitch four (4) stitch lines, 1/4-inch apart starting 1/16-inch from edge. Over-edge other opposite side. Attach backing strip with SSa-1. Sew slide fastener (zipper) tapes to both sides of outer-shell slit with LSd-1. Slide Fastener (zipper) shall close when slider pulled toward parka center. Finished appearance of slide fastener (zipper) shall be smooth and even with outer topstitching in alignment with center underarm seam and no gaps in top or bottom stops. Use short 3-inch thong.

3.7.2 Front pocket assembly. Sew tricot knit pocket lining at pocket entry to inside slide fastener (zipper) tape with seam LSd-1 on cover side and SSa-1 with turn on opposite. On slide fastener (zipper) cover side sew slide fastener (zipper) cover facing to face of slide fastener (zipper) tape with SSa-1. Sew facing strip to outer-shell with seam SSe-2, topstitch 3/16-inch nominal from edge. Attach outer-shell to noncovered tape side with SSa-1 for LSd-1 finish. Topstitch 1/16-inch from edge catching slide fastener (zipper) tape and pocket knit. Bartack top and bottom of slide fastener (zipper). Slide fastener (zipper) shall close when slider pulled up. Finished appearance shall show slide fastener (zipper) cover and topstitch in flat even manner in line with first quadrant side seam. Pocket pouch area shall be defined with base LSbj-1 stitch line, first quadrant side seam, top horizontal chest seam, and tucking under slide fastener (zipper) tape seam.

3.7.2.1 Arm sleeve pocket. Assemble pocket flap. Sew two (2), 1-inch by 1-1/2 inch. hook tape strips and one (1), 1-inch by 1-inch loop strip on inside flap and one (1), 2-inch by 4-inch loop tape strip and 2-inch long by 1-inch wide, Foliage Green 504 color for Class 1 and Tan 499 for Classes 2 and 3, webbing release tab with 1-inch by 1-inch hook tape on inside of outer flap per pattern placement. Fold pocket flap strip longitudinally in half. Sew sides with seam SSe-2, topstitch three (3) sides 1/16-inch along edges. Sew to outer-shell pattern placement with LSq-2. Bar tack each end of flap. Fold over top 1-inch portion of main pocket body for top hem. Assemble cargo pocket bellow side and bottom locations with seam OSf-1 per pattern placement. Back tack top of No. 1 vertical and horizontal bellow location. Sew one (1), 4-inch by 6-inch loop tape strip to center of main pocket body piece per pattern placement. Sew bottom corner bellow strips together with seam SSa-1 and bottom bellow strip to main body with seam SSe-2. Back tack each corner 1/2-inch back. Sew top hem with LSd-1, 1-inch from top edge, including side bellows. Topstitch 1/16-inch from top edge. Attach entire pocket assembly with LSd-1 leaving 1/4-inch drainage gap at center bottom of pocket with double backstitching going back 3/8-inch from opening or sewn in drainage hole. Finished appearance of pocket should show pocket flap and loop tapes in alignment with body of pocket with topstitching 1/16-inch around all sides of pocket and flap. Side and bottom bellows shall be in alignment with reinforced drain hole at base of pocket. The flap shall have a 1-inch by 2-inch long seared pull tab with hoop tape capable of attaching to either the main body of the pocket or being tucked under the flap with IFF indicator tab sewn to the underside of the tab, visible when attached to the outer side of shoulder pocket flap (see Figure 4) NOTE: A 3/4-inch bar tack between the two (2) hook tapes as shown on Figure 4 is optional).

3.7.3 Arm sleeve hem adjustment tab. Sew pattern strips with seam SSe-2. Sew 3/4-inch by 1-1/2 inch hook tape strip to inside surface of tab per pattern placement.

3.7.4 Chest name tag and rank loop tapes. Attach 1-inch by 5-1/4 inch chest name loop tapes and 2-inch by 2-inch rank tape per pattern placement.

3.7.5 Front lining. Pre-sew lower knit pocket pouch assembly with LSbj-1. Assemble front knit lining pattern pieces into zipper tape side with Ssa-1, tuck into hem, and over edge inside and top together with side, underarm and horizontal chest primary seams with top stitching for finished LSq-2.

3.7.6 Arm sleeve cuff hem. Sew arm sleeve hem strip end to end with seam LSq-2, while catching adjustment tab and 5-inch elastic end into seam. Sew 3/4-inch by 5-inch loop tape strip per pattern placement onto hem strip. Fold hem strip longitudinally in half and topstitch other elastic end matching up with loop tape end. Stretch elastic out and topstitch center with backstitching at each end. Over edge hem strip, while catching 3/8-inch webbing loop into over edge to end of sleeve cuff to form seam LSq-2. Webbing loop shall have opening of 1-1/4 inch Topstitch 1/4-inch nominal from edge. Finished appearance shall show cuff flat and even with elastic drawback within elasticized zone capable of stretching to min of 6-1/2 inch with recovery and adjustment tab in alignment with hem loop tape and with inside webbing hold down loop. The finished, lay-flat diameter measurement of the cuff in its relaxed position shall be 5-1/4 inches.

3.7.6.1 Hem seam. Set four (4), 1/8-inch metal eyelets per pattern placement and weave cord through eyelets. Pre-sew elastic cord ends into pin and box zipper sides, insert elastic cord equipped with two (2) barrel locks with plastic anti-slip through beads and two (2), 3/8-inch wide webbing cord lock hold down loops into seam per pattern placement and topstitch entire upper hem with single continuous EFb-1 seam.

3.7.7 Hood with two (2) barrel lock tunnels (top hood and back hood). Topstitch one (1), 5/8-inch by 1-inch loop tape to center hood panel and two (2), 5/8-inch by 1-inch loop tapes to side hood panels per pattern placement. Set in two (2), 1/8-inch metal eyelets on both sides of hood panels (four (4) eyelets total) per pattern placement. Sew three (3) primary panels with LSq-3. Top hood Tunnel - Sew upper hood cord lock tunnel strips together with LSq-3. Snake elastic cord into eyelets while applying plastic cord locks at position between eyelets at base of hood. Tie off elastic ends through lower eyelet. Sew top hood tunnel strip to upper hood panels with LSq-2 with elastic cord inserted into tunnel. Prior to final sewing of tunnel sew in second back hood tunnel strip. Set 5/16-inch metal grommet in back center of hood, insert looped 4-inch long 3/8-inch webbing strip into grommet in preparation of sewing hanger loop, and topstitch webbing end along tunnel side topstitching, over edge both sides of tunnel strip, topstitch back hood strip per pattern placement with elastic cord within tunnel and catching center webbing hanger loop into stitch line. Final sew top tunnel with LSd-1 while catching back hood tunnel ends into stitch line along with end of 3/8-inch webbing with elastic cord attachment. Reinforce webbing ends (webbing with elastic cord ends and hanger loop).

3.7.7.1 Hide-away (HA) collar assembly. Assembly is comprised of three (3) pieces, the top collar, under collar, and under collar facing. Over edge raw cut side of under collar facing and sew on three (3), 1-inch by 5/8-inch hook tape strips per pattern placement. Attach collar facing to upper collar with SSe-2. Turn collar facing and upper collar out, so they both lay back to back and topstitch at the edge. Attach upper edge of collar facing and under collar to upper collar edge of top collar with SSe-3. Sew top collar to body of jacket with LSq-2 with size tag in center of neck line. Topstitch 5/8-inch by 2-inch hook strip to HA collar per pattern placement. Finished appearance of hood and HA hood assembly shall show hood with three (3) plastic cord locks capable of adjusting hood size along top visor and center back side and webbing loop tape at back center for hanging jacket. Hood shall possess capability to stow away into collar assembly at three (3) points (center and either side) with collar cover aligned baseline stitching hood attachment. With front slide fastener (zipper) engaged, the top slide fastener (zipper) cover loop strip shall align with the HA collar hook tape.

3.8 Labels. Each jacket shall have a label in accordance with Type VI, Class 14 of MIL-DTL-32075. The color of the labels shall approximate the ground shade of the basic fabric or white. In addition it shall contain a bar coding label in accordance with Type VIII and Class 17.

3.8.1 The combination size, identification and instruction label for the jacket. The combination label shall be sewn on the inside of the jacket along the middle back seam of the collar area. The printed label shall be facing the body. The instruction label shall include the following information:

Jacket, Soft Shell Cold Weather
Care instruction label

LAUNDERING (do not dry clean)

a. Home laundering. The garment shall be machine laundered using the delicate/gentle fabric cycle or laundered by hand. Use cold water (up to 90°F/32°C) and cold water laundry detergent (i.e., Liquid Tide or Era Plus). Rinse in clean, cold water. **DO NOT STARCH OR BLEACH.** Dry in tumble dryer at temperature not exceeding 130°F/54°C as degradation of the component materials will result. Avoid over drying. To drip dry, place on a rust proof hanger. **DO NOT PRESS.**

b. Field laundering. The garment shall be field laundered using formula II of FM 42-414, Appendix E. **DO NOT STARCH OR BLEACH.**

3.9 Patterns. Standard patterns, providing a seam allowance of 1/2-inch for all seams, except where otherwise specified, will be furnished by the Government. The pattern list in Table V is provided to ensure that the pattern set provided is complete. The Government patterns shall not be altered in any way, and are to be used only as a guide for cutting the contractor's working patterns. The working patterns will be identical to the Government patterns, except that additional notching to facilitate manufacture is possible. Also, minor modifications are permitted where necessary to accommodate manufacturer's processes and using automatic equipment. These modifications shall not alter the serviceability or appearance requirements.

3.9.1 Pattern parts. The component parts shall be cut from the materials indicated and in accordance with the pattern parts listed in Table V. The finished lengths of the slide fasteners for the various size-length jackets shall be as shown in TABLE VII, line items 5, 9, and 10.

TABLE V. Cutters must (list of pattern parts)

	PIECE NAME	FABRIC	QTY
1	SST_RIGHT FRONT AND BACK YOKE	SELF	CUT 1 FACE UP
2	SST_LEFT FRONT AND BACK YOKE	SELF	CUT 1 FACE UP
3	SST_FRONT RIGHT	SELF	CUT 1 FACE UP
4	SST_FRONT LEFT	SELF	CUT 1 FACE UP
5	SST_FRONT SIDE	SELF	CUT 2
6	SST_BACK	SELF	CUT 1 FACE UP
7	SST_SLEEVE	SELF	CUT 2
8	SST_SLEEVE INSERT FRONT	SELF	CUT 2
9	SST_SLEEVE INSERT BACK	SELF	CUT 2
10	SST_ELBOW	SELF	CUT 4
11	SST_TOP COLLAR	SELF	CUT 1 FACE UP
12	SST_UNDER COLLAR	SELF	CUT 1 FACE UP
13	SST_CUFF	SELF	CUT 2

TABLE V. Cutters must (list of pattern parts) - Continued

	PIECE NAME	FABRIC	QTY
14	SST_SLEEVE TAB	SELF	CUT 2
15	SST_SLEEVE POCKET	SELF	CUT 2
16	SST_SLEEVE POCKET FLAP	SELF	CUT 2
17	SST_HOOD SIDE	SELF	CUT 2
18	SST_HOOD CENTER	SELF	CUT 1 FACE UP
19	SST_HOOD FACING	SELF	CUT 2
20	SST_HOOD MID TUNNEL	SELF	CUT 2
21	SST_ARMPIT ZIP WELT	SELF	CUT 2
22	SST_TOP FLAP	SELF	CUT 1 FACE UP
23	SST_WIND FLAP	SELF	CUT 1 FACE UP
24	SST_POCKET ZIP FACING	SELF	CUT 2
25	SST_UNDER COLLAR FACING	SELF	CUT 1 FACE UP
26	SST_FRONT LINING	CONTRAST	CUT 2
27	SST_POCKET BAG	CONTRAST	CUT 2
28	SST_CUFF FUSE	FUSE or Sewn-In	CUT 2
29	SST_TOP FLAP FUSE	FUSE or Sewn-In	CUT 1 FACE UP
30	SST_WIND FLAP FUSE	FUSE or Sewn-In	CUT 1 FACE UP
31	SST_SLEEVE TAB FUSE	FUSE or Sewn-In	CUT 2
32	SST_SLV PKT FLAP FUSE	FUSE or Sewn-In	CUT 2
	COMMENTS BELOW:		
	SELF = BASIC SHELL MATERIAL CONTRAST = TRICOT KNIT MESH FUSE or Sewn-In = Interfacing. (may be sewn or fusible)		

3.10 Stitches, seams, and stitching. All stitches, seams, and stitching shall conform to ASTM D 6193. Unless otherwise specified, primary seams use either SSa-1 with 504, 505 or other three (3) or four (4) thread over-edge or SSa-2 with 516 safety stitch. All primary seams shall be topstitched using 301 lockstitch at 9-12 stitches per inch (SPI) for finished seam type LSq-2. Pocket pouch assembly requires safety stitch. Seam allowances shall be maintained with seams sewn so that no raw edges, run-offs, pleats, puckers, or open seams occur. Loop fastener tape shall be stitched on the loop pile and not on the selvage. Bartacks shall be added for reinforcement (see figures 1, 2, 3 and patterns for details) in the locations, length and quantities listed in Table VI.

TABLE VI. Bartack locations, lengths and quantity per garment

Bartack Location	Bartack Length, Inch	Stitches 1/	Quantity per Garment
Collar	1/2	30 stitches	2
Sleeve Pocket	1/2	30 stitches	4
Sleeve Pocket Flap	1/2	30 stitches	4
Front Pocket Ends	1/2	30 stitches	4
Pit Zipper Ends	1/2	30 stitches	4
Zipper Pulls	3/8	22 stitches	5

1/ (± 2) stitches for the number of stitches

3.10.1 Primary seams. I.e., side quadrant seams, under arm seams, vertical center back seam, horizontal hideaway collar/hood seams shall be seam type Lsq-2 with 301 lock topstitch at 9-12 stitches per inch (SPI). Arm sleeve seams, back shoulder horizontal seam, front horizontal upper chest seams and center hood seams shall be Lsq-3 with double topstitch at 9-12 stitches per inch.

3.10.1.1 Repairs of Type 301 stitching.

a. When thread breaks, skipped stitches, run-offs, or bobbin run-outs occur during sewing, the stitching shall be repaired by restarting the stitching a minimum of 1/2-inch back of the end of the stitching. 1/

b. Except for pre-stitching, thread breaks or two (2) or more consecutive skipped or run-off stitches noted during inspection of the item shall be repaired by overstitching. The stitching shall start a minimum of 1/2-inch in back of the defective area, continue over the defective area, and continue a minimum of 1/2-inch beyond the defective area onto the existing stitching. Loose or excessively tight stitching shall be repaired by removing the defective stitching without damaging the materials, and re-stitching in the required manner. 1/

1/ When making the above repairs, the ends of the stitching are not required to be backstitched.

3.10.1.2 Automatic stitching. Automatic machines may be used to perform any of the required stitch patterns provide the requirements for the stitch pattern, stitches per inch, and size and type of thread are met; and at least three (3) tying, overlapping or back stitches are used to secure the ends of the stitching.

3.10.1.3 Thread ends. All thread ends shall be trimmed to a length of not more than 1/4-inch unless otherwise specified.

3.10.2 Type 301 stitching. Ends of all stitching shall be backstitched or overstitched not less than 1/2-inch except where ends are turned under or caught in other seams or stitching. Ends of a continuous line of stitching shall over-lap not less than 1/2-inch. Thread tensions shall be maintained so that there will be no loose stitching resulting in loose bobbin or top thread or excessively tight stitching resulting in puckering of the materials sewn. The lock shall be embedded in the materials sewn.

3.11 Finished measurements. The Jacket finished measurements shall be in accordance with Table VII when evaluated as specified in Table VII and 4.6.16.

TABLE VII. Jacket finished measurements (measurements in inches)

LENGTH - REGULAR		SIZES						
Area Ref #	Location	XS	S	M	L	XL	2XL	TOL +/- (inches)
1	ACROSS CHEST 1/	24	26	28	30	32	34	-1/4, +1/2
2	BACK LENGTH 2/	28-1/2	29	29-1/2	30	30-1/2	31	± 1/2
3	SLEEVE LENGTH FROM CB 3/	34-1/2	35-1/4	36	36-3/4	37-1/2	38-1/4	± 1/2
4	CUFF OPENING - FINISHED 4/	10	10-1/2	11	11-1/2	12	12-1/2	± 1/4
5	CF ZIPPER LENGTH 5/	28-1/2	29	29-1/2	30	30-1/2	31	± 1/2
6	COLLAR SPREAD WITH ZIPPER 6/	21-1/2	22-1/2	23-1/2	24-1/2	25-1/2	26-1/2	± 1/4
7	COLLAR WIDTH AT CF	4	4	4	4	4	4	± 1/4
8	CUT ELASTIC CUFF MEASUREMENT	3	3-1/2	4	4-1/2	5	5-1/2	± 1/4
9	FRT POCKET ZIPPER LENGTH 7/	9-1/2	9-1/2	9-1/2	9-1/2	9-1/2	9-1/2	± 1/4
10	ARMPIT ZIPPER LENGTH 8/	7	7	7	7	7	7	± 1/4
11	HOOD DEPTH 9/	10-1/2	11	11-1/2	12	12-1/2	13	± 1/2
12	HOOD HEIGHT AT OPENING 10/	16	16-1/4	16-1/2	16-3/4	17	17-1/4	± 1/2
13	HEM CORD CUT LENGTH	46	50	54	58	62	66	± 1/2
14	FRT HOOD OPENING CORD	37	37-1/2	38	38-1/2	39	39-1/2	± 1/2
15	MIDDLE HOOD TUNNEL CORD	21	22	23	24	25	26	± 1/2
SHORT		**XS**	**S**					
2	BACK LENGTH 2/	27-1/2	28					± 1/2
3	SLEEVE LENGTH FROM CB 3/	33	33-3/4					± 1/2
5	CF ZIPPER LENGTH 5/	27-1/2	28					± 1/2
LENGTH LONG			**S**	**M**	**L**	**XL**	**2XL**	
2	BACK LENGTH 2/	29-1/2	30	30-1/2	31	31-1/2	32	± 1/2
3	SLEEVE LENGTH FROM CB 3/	36	36-3/4	37-1/2	38-1/4	39	39-3/4	± 1/2
5	CF ZIPPER LENGTH 5/	29-1/2	30	30-1/2	31	31-1/2	32	± 1/2

TABLE VII. Jacket finished measurements (measurements in inches) – Continued

Area Ref #	Location	SIZES						TOL +/- (inches)
	XLONG					**XL**	**2XL**	
2	BACK LENGTH 2/					32-1/2	33	± 1/2
3	SLEEVE LENGTH FROM CB 3/					40-1/2	41-1/4	± 1/2
5	CF ZIPPER LENGTH 5/					32 1/2	33	± 1/2
	* total measurement (TM), center front (CF), center back (CB)							
	1/ Across chest measurement is taken from folded edge to fold edge at bottom of armhole/armscye.							
	2/ Back length measurement is taken from bottom of center back neck straight to hem.							
	3/ Sleeve length is taken from CB Neck Point to shoulder point then along the outer flattened folded edge of sleeve straight to bottom of hem.							
	4/ Cuff opening is taken from folded edge to folded edge at sleeve hem flat and relaxed.							
	5/ CF zipper length shall start and end at the outer edges of both zipper stops.							
	6/ Collar spread measurement is taken flat from edge to edge including zipper.							
	7/ Front pocket zipper measurements shall start and end at the outer edges of both zipper stops.							
	8/ Armpit zipper measurements shall start and end at the outer edges of both zipper stops.							
	9/ Hood depth is measured with hood folded in half and flat from the back of the hood to the front straight at widest point.							
	10/Hood height is measured with hood folded flat at front opening from base of hood to top of hood.							
	Measurements for locations: 4, 6, 7, 8, 9, 10, 11, 12, 13, 14, & 15 are for construction purposes only							
	SEAM ALLOWANCE: 1/2-inch (all seams except for the following): 3/8-inch (CF, collar construction, neckline, front pocket zipper and front of hood) 1-inch (body hem)							

3.12 Toxicity. The finished soft shell jacket shall not present a health hazard and shall show compatibility with prolonged, direct skin contact when tested as specified in 4.6.14. Chemicals recognized by the Environmental Protection Agency (EPA) as human carcinogens shall not be used.

4. VERIFICATION

4.1 Classification of inspections. The inspection requirements specified herein are classified as follows:

a. First article inspection (see 4.2).
b. Conformance inspection (see 4.3).

4.2 First article inspection. When a first article is required (see 3.1 and 6.3), it shall be examined for the defects specified in Table IX and tested as specified in 4.4, 4.5 and 4.6.

4.3 Conformance inspection. Conformance inspection shall include the examination of 4.4, 4.5 and 4.6. Sampling for inspection shall be performed in accordance with ANSI/ASQ Z1.4 and with acceptance quality limits (AQL) as specified in the contract and/or order, except where otherwise indicated (see 6.2).

4.4 Component and end item inspections. In accordance with 4.1, components and materials in the end items shall be tested in accordance with all the requirements of referenced documents unless otherwise excluded, amended, modified or qualified in this document or applicable procurement documents. The Government reserves the right to inspect all components and end items to determine conformance to requirements.

4.5 Basic material and component testing. The basic material and components specified in 3.5 through 3.6.14 shall be tested for the characteristics listed in Tables I, II, III, III.A, III.B, IV and IV.A in accordance with the test methods cited in Table VIII.

TABLE VIII. Basic material testing

Characteristic	Reference Paragraph	Test method
Basic shell materials (3.5.1) (Type I and Type II)		
Fiber identification,	3.5.1.1 and 3.5.1.2	AATCC-20 or ASTM D 276 1/
Weave	3.5.1.1 and 3.5.1.2	Visual
Fabric count	3.5.1.1	ASTM D 3775
Weight	3.5.1.3 and Table I	ASTM D 3776 (Method C)
Breaking strength	3.5.1.3 and Table I	ASTM D 5034 (G-E or G-T)
Elongation (Type I only)	3.5.1.3 and Table I	ASTM D 5034 (G-E or G-T)
Tearing Strength	3.5.1.3 and Table I	ASTM D 1424
Air Permeability	3.5.1.3 and Table I	ASTM D 737
Moisture vapor transmission	3.5.1.3 and Table I	4.6.1
Stiffness		
At 32ºF	3.5.1.3 and Table I	4.6.10 2/ & ASTM D 747 3/
At 70ºF	3.5.1.3 and Table I	4.6.10 ASTM D 747 3/
Blocking	3.5.1.3 and Table I	4.6.2
Water permeability		
Initial	3.5.1.3 and Table I	4.6.3
Spray rating		
Initial, and	3.5.1.3 and Table I	4.6.4.1
After five (5) launderings	3.5.1.3 and Table I	4.6.4.2 & 4.6.4.1. & 4.6.9.1.1
Resistance to organic liquid (Type I only)		
Initial	3.5.1.3 and Table I	4.6.5.1
Dynamic absorption	3.5.1.3 and Table I	AATCC-70
Dimensional stability	3.5.1.3 and Table I	AATCC-96, Option 1C
Color	Table I and 3.5.1.4	4.6.6

TABLE VIII. Basic material testing - Continued

Characteristic	Reference Paragraph	Test method
Basic shell material - Continued		
Colorfastness to:		
Laundering (Color change and Staining)	Table II	4.6.9.1 4/
Light (40 hrs or 170 kJ)	Table II	AATCC-16.2 or AATCC 16.3 5/
Perspiration (Class 2 and Class 3 only) (acid & alkaline)	Table II	AATCC-15 4/
Crocking (wet and dry)	Table II	AATCC-8 6/
Pattern Execution	Table I and 3.5.1.5	4.6.7
Spectral Reflectance	3.5.1.6 and Tables III III.A and III.B	4.6.8
Toxicity	Table I and 3.12	4.6.14
Mesh Tricot Pocket Lining (3.5.2)		
Fiber identification	3.5.2	AATCC-20 or ASTM D 276 1/
Weight	Table III	ASTM D 3776 (Method C)
Dimensional Stability		AATCC-135, IIIA
Colorfastness:		
Laundering (Color change and Staining)	Table IV	AATCC-61, IIA 4/
Light(40 hrs or 170 kJ)	Table IV	AATCC-16.2 or AATCC-16.3 5/
Perspiration (Class 2 and Class 3 only) (acid & alkaline)	Table IV	AATCC-15 4/
Crocking (wet and dry)	Table IV	AATCC-8 6/
Toxicity	Table IV & 3.12	4.6.14
Thread (3.6.1)		
Color matching	3.6.1	4.6.6
Webbing/tape (3.6.3)		
Color matching	3.6.3	4.6.6
Fastener Tape, Hook and Loop (3.6.4)		
Color matching	3.6.4	4.6.6
Colorfastness	3.6.4.1	A-A-55126
Laundry Durability	3.6.4.2	4.6.17 - 4.6.17.4
Elastic cord (3.6.5)		
Elongation	3.6.5	4.6.12
Weight	3.6.5	ASTM D 3776
Picks/inch	3.6.5	Visual
Number of carriers	3.6.5	Visual
Ends per carrier	3.6.5	Visual
Elastic strands/width	3.6.5	4.6.13

TABLE VIII. Basic material testing - Continued

Characteristic	Reference Paragraph	Test method
Elastic Material (3.6.6)		
Color matching	3.6.6	4.6.6
Spectral Reflectance	3.6.6 & Table III.A & Table III.B	4.6.8
Slide Fasteners (3.6.7)		
Color matching	3.6.7	4.6.6
Barrel Lock (3.6.8)		
Holding Strength	3.6.8	4.6.11
Dimensions	3.6.8	Visual with calibrated ruler
Shape	3.6.8	Visual
Color matching	3.6.8	4.6.6
Snap fasteners (3.6.9)		
Color matching	3.6.9	4.6.6
Eyelets (3.6.10)		
Color matching	3.6.10	4.6.6
Cannon Clip (3.6.11)		
Color matching	3.6.11	4.6.6
Grommets (3.6.12)		
Color matching	3.6.12	4.6.6
Interfacing (3.6.13)		
Fiber content	3.6.13	AATCC 20 or ASTM D 276 1/
Binding Tape (3.6.14)		
Fiber content	3.6.14	AATCC 20 or ASTM D 276 1/
Weight	3.6.14	ASTM D 3776
Color matching	3.6.14	4.6.6
Width	3.6.14	Visual
Spectral Reflectance	3.6.14 & Table III.A & IIIB	4.6.8

1/ In case of dispute, the ASTM method prevails.

2/ The test specimens and testing machine shall be exposed to 32°F (±2)°F for four (4) hours. The test shall then be performed in still air at that temperature.

3/ Stiffness (bending moment) shall be conducted in accordance with ASTM D 747 except as follows:

a. Unless otherwise specified, the testing conditions shall be in accordance with ASTM D 1776.

b. The test specimen shall be a rectangle of cloth of dimensions 2-inch by 1-inch with the long dimension parallel to the fabric direction under test, warp or filling, as applicable.

c. The load scale reading shall be recorded only at the specimen angular deflection of 60 degrees.

d. The stiffness is the bending moment of specimen at a deflection angle of 60 degrees and shall be calculated to three significant figures as follows:

$$\text{Bending moment, in.-lb.} = \frac{\text{Load scale reading x moment weight*}}{100}$$

* Testing machine of Tinius Olsen Testing Machine Co.

4/ Rated using the AATCC Gray Scale for Color Change and AATCC Gray Scale for Staining.

5/ Rated using the AATCC Gray Scale for Color Change.

6/ Rated using the AATCC 9-Step Chromatic Transference Scale.

4.6 Methods of testing. All testing shall be done in a standard condition environment defined by the ASTM D 1776, if not specifically defined by the individual test procedure.

4.6.1 Moisture vapor transmission rate. ASTM E 96 with temperature and humidity conditions of 73.5^{o}F (±1)^{o}F and 50(± 2) percent relative humidity. The linear air flow velocity in the wind tunnel shall be set to yield an upright, 'open cup' evaporation rate at all test specimen positions of 15,000 (± 1,000) grams per square meter after twenty-four (24) hours, (the evaporation rate shall be determined by conducting an upright cup, Procedure B test without a test specimen for a period of exactly two (2) hours.

4.6.1.1 Procedure B. ASTM E 96. The back side of the basic material shall face the water. The test specimen shall be conditioned, after set-up in the test cup with water level of 3/4 (±1/16) inch below the specimen surface, in the wind tunnel for a period of not less than four (4) hours and not more than 16 hours. Conditioning time of less than four (4) hours may be used provided that equilibrium conditions have been demonstrated to exist within the test sample/sample cup/wind tunnel. (In cases of dispute, the conditioning time shall be four (4) hours). After conditioning, the cup shall be immediately weighed to start the test and again after exactly 24 hours to complete the test. Five (5) specimens shall be tested.

4.6.2 Blocking. Blocking Resistance at Elevated Temperatures, except that the tests shall be performed at a temperature of 180°F (± 2)^{o}F for 30 minutes. Only one (1) specimen shall be tested. Evaluate the resistance of the specimen to blocking by the scale given below:

1 -- *No Blocking*. Cloth surfaces are free and separate without any evidence of cohesion or adhesion.
2 -- *Trace Blocking*. Cloth surfaces show slight cohesion or adhesion.
3 -- *Slight Blocking.* Cloth surfaces must be lightly peeled to separate.
4 -- *Blocking.* Cloth surfaces separate with difficulty or coating is removed during separation.

4.6.3 Water permeability. ASTM D 751, Hydrostatic Resistance, Procedure B, Procedure 1 with a rising hydrostatic head at 10 milliliter per second applied to the face side of the test specimen. Five (5) specimen shall be tested. Leakage is defined as the appearance of one (1) or more droplets of water within the 4-1/2 inch diameter test area.

4.6.4 Spray rating.

4.6.4.1 Initial. Testing shall be conducted in accordance with AATCC-22.

4.6.4.2 After five (5) launderings. Test specimens shall be laundered for five (5) laundering cycles in accordance with 4.6.9.1.1 and then tested for spray rating in accordance with 4.6.4.1.

4.6.5 Resistance to organic liquids.

4.6.5.1 Initial. Place a small specimen of the cloth on a smooth horizontal surface, face side up. Using a pipette or eyedropper, gently deposit one (1) drop of n-tetradecane on the surface of the specimen. After 30 seconds, examine the specimen under light at an angle. Absence of light reflectance at the cloth/drop interface shall be taken as evidence of wetting. Three (3) specimen (or areas) taken at various locations across the sample unit shall be tested. Evidence of wetting on one (1) or more specimens shall be considered a test failure.

4.6.6 Visual shade matching. The color and appearance of the cloth shall match the standard sample when viewed using the AATCC Evaluation Procedure 9, Option A or C, with sources simulating artificial daylight D75 illuminant with a color temperature of 7500 (± 200)°K illumination of 100 (± 20) foot candles, and shall be a good match to the standard sample under incandescent lamplight at 2856 (± 200)°K.

4.6.7 Pattern execution. The pattern of the cloth shall be matched to the applicable pattern drawing no. 2-1-2519 for Class 1 and 2-1-2592 for Class 3. For Class 2, see 6.4.

4.6.8 Spectral reflectance. Spectral reflectance data shall be determined on the face side and shall be obtained from 600 to 860 nanometers (nm) at 20 nm intervals on a spectrophotometer, relative to the barium sulfate standard, the preferred white standard. Other white reference materials may be used provided they are calibrated to absolute white, e.g., magnesium oxide or vitolite tiles. The spectral band width shall be less than 26 nm at 860 nm. Reflectance measurements may be made by either the monochromatic or polychromatic mode of operation. When the polychromatic mode is used, the spectrophotometer shall operate with the specimen diffusely illuminated with the full emission of a source that simulates either CIE source A or CIE source D65. The specimen shall be measured as a single layer, backed with six (6) layers of the same fabric and shade. Measurements shall be taken on a minimum of two (2) different areas and the data averaged. The measured areas should be at least 6-inches away from the selvage. The specimen shall be viewed at an angle no greater than 10 degrees from the normal, with the spectral component included. Photometric accuracy of the spectrophotometer shall be within 1-percent and wavelength accuracy within 2-nm. The standard aperture size used in the color measurement device shall be 0.3725-inches in diameter or larger. Any color having spectral reflectance values falling outside the limits at four (4) or more of the wavelengths specified shall be considered a test failure.

4.6.9 Colorfastness.

4.6.9.1 Laundering. AATCC-61, Test 1A (3 cycles) except that 1993 AATCC Standard Reference Detergent (non-phosphate) without optical brighteners shall be used.

4.6.9.1.1 Laundering procedure. Place 2.0 (± 0.2) pounds of the cloth and, if needed, ballast in an automatic washing machine set on permanent press cycle, high water level and warm 100°F (+ 10°F, -0°F) wash temperature. Place 0.5 ounces (14 grams) of 1993 AATCC Standard Reference Detergent (non-phosphate) without optical brighteners into the washer. The duration

of each laundering cycle shall be 30 (± 5) minutes. After laundering, place sample and ballast in an automatic tumble dryer set on permanent press cycle, 150°F - 160°F, and dry for approximately fifteen (15) minutes. The laundering equipment, washer and dryer, shall be in accordance with AATCC-135.

4.6.9.1.2 Light. AATCC-16.2 (after 40 fading units) or AATCC 16.3 (after 170 kilojoules).

4.6.10 Stiffness. Stiffness at 70°F and 32°F- ASTM D 747.

4.6.11 Barrel lock test. The barrel lock holding strength shall be tested as follows:

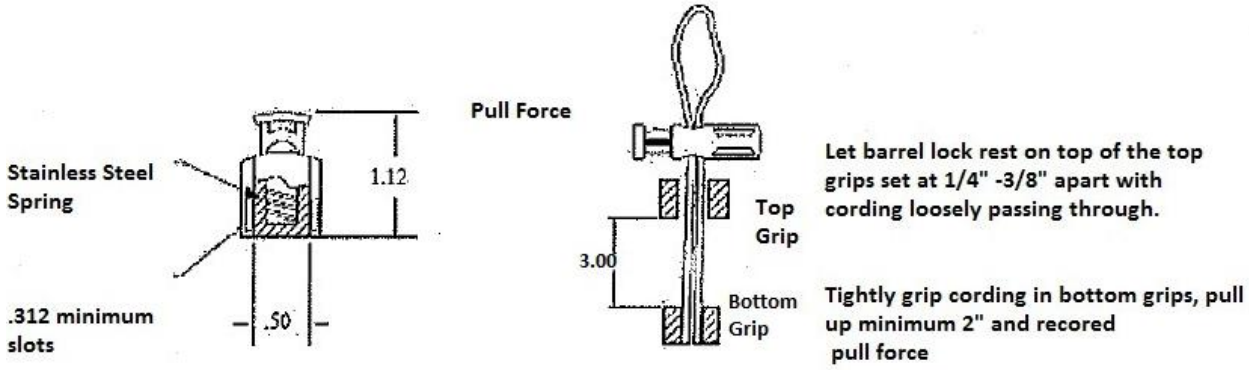

Barrel lock holding strength: Using tensile testing machine in accordance with ASTM D 5034 at 2 inches/minute either pull-up cord on stationary engaged barrel lock or vice-versa.

4.6.12 Elongation. Cut a 14-inch specimen from a representative sample cord and make two marks on the cord so that a distance of 10-inches is between the gage marks. Suspend the cord from a clamp in such a manner as to allow a 2-pound weight to be hung on the lower end of the cord. Gradually lower the weight until the entire load is carried by the cord. After two (2) minutes, take a measurement between the two marks and calculate the increase in length as follows:

$$\text{Elongation (\%)} = \frac{B-A}{A} \times 100$$

Where:
A = Initial measurement
B = Measurement of elongation at 2 pounds

4.6.13 Gage of rubber. The gage of rubber (elastic strands) shall be determined by counting the actual number of strands, laid side by side, contained in 1-inch. The gage is equivalent to the actual number of rubber yarns contained in 1-inch. A measuring device that measures the gage of rubber yarns may be utilized providing results are comparable.

4.6.14 Toxicity test. When required, (see 6.2), an acute dermal irritation study and a skin sensitization study shall be conducted on laboratory animals. When the results of these studies indicate the finished cloth is not a sensitizer or irritant, a Repeat Insult Patch Test shall be performed in accordance with the Modified Draize Procedure (see 2.3). If the toxicity

requirement (see 3.10) can be demonstrated with historical use data, toxicity testing may not be required (see 6.2).

4.6.15 End item visual examination. Jackets shall be subjected to a visual examination for defects. All garment defects shall be scored in accordance with Table IX. Material defects are defined in Section I of FED-STD-4 and Table IX. All shade evaluations of the garment shall be evaluated at a distance of approximately 3-feet and under the artificial daylight as specified in 4.6.6.

TABLE IX. End item visual examination

		Classification	
Examination	Defect	Major	Minor
Material defects and damages	Any smash, multiple float or loose slub	101	
	Cut, tear, mend, burn, needle chew, or hole	102	
	Misweave, area of poor dye penetration, dyestreak, broken or missing yarn, visible mend, thin place or shade bar 1/	103	201
Cleanliness	Any spot, streak, or stain of a permanent nature on any portion of garment which would be visible when the garment is worn		202
	Removable spot, streak, or stain on outside of garment		203
	Thread ends not trimmed throughout garment		204
	Any holding or basting threads visible on outside of the finished garment, when applicable		205
Component and assembly	Any defective component 1/	104	206
	Any component part omitted	105	
	Any required operation omitted or improperly performed 1/	106	207
Drawcord	Any drawcord caught in hem or tunnel stitching restricting use of drawcord	107	
	Any end not heat seared		208
	Any drawcord omitted	108	
	Any end not knotted		209
	Any drawcord insufficient in length	109	
	Any barrel lock omitted		210
	Not caught in center bartack, when specified		211
Slide fastener	Any part of slide fastener bent, broken, otherwise defective	110	
	Not closing as specified	111	
	Length not as specified	112	
	Color not as specified		212
	Thong not as specified		213

TABLE IX. End item visual examination - Continued

		Classification	
Examination	Defect	Major	Minor
Snap fastener	Any part of assembly missing, mismated, broken, cracked, bent, not securely clinched, affecting function:		
	- two (2) or more snap fasteners	113	
	- one (1) snap fastener		214
	One (1) or more clinched too tightly cutting surrounding fabric	114	
	Loose, i.e., socket or stud spins freely or wobbles in connection portions		215
	One (1) or more having rough or sharp edge	115	
Wrist tabs	Missing	116	
	Improperly located 1/	117	216
Labels	Missing, illegible, or incorrect	118	
	Incorrectly placed or attached		217
Accuracy of seaming	Seam twisted, pleated, seaming or puckered 1/	119	218
	Part of garment caught in any unrelated operation or stitching 1/	120	219
	Thread break secured by stitching back of the break less than 1/2-inch		220
	Ends of all seams and stitchings when not caught in other seams or stitching, uneven or backtacked less than 1/2-inch		221
	Color not as specified		222
	Gauge of stitching uneven or not as specified		223
Accuracy of seaming Continued	Edge of seam tape less than 1/8-inch from seam allowance	121	
	Seam tape lifting off fabric	122	
	Visible scorching (heat degradation of fabric) in excess of 3/16-inch width or 1/2-inch in length at any location along a taped seam	123	
Open seams	More than 1/8-inch up to 1/4-inch		224
	More than 1/4-inch	124	
	NOTE: One (1) or more broken or two (2) or more continuous skipped or run-off stitches constitute an open seam. On double stitched seams, a seam is considered open when one (1) or both sides of the seam are open. Raw edge not securely caught in stitching shall be classified as an open seam		

TABLE IX. End item visual examination - Continued

		Classification	
Examination	Defect	Major	Minor
Seams and stitching	Not specified seam or stitch type		225
	Missing, broken or skipped stitches 1/	125	226
Stitch tension	Loose tension in any area:		
	- more than 1-inch but not more than 2-inches		227
	- more than 2-inches	126	
	Tight tension (stitches break when normal strain is applied to the seam or stitching)	127	
	Missing, broken, or skipped stitches	128	
Stitches per inch (to be scored only when the condition exists on major portion of the seam)	Less than minimum specified:		
	- one (1) stitch		228
	- two (2) or more stitches	129	
	More than maximum specified		229
Pockets and flaps	Flap attached crookedly, i.e., distance between sides of pocket and underside of opened flap varies more than 1/4-inch		230
	Pocket or flap poorly shaped		231
	Flap not covering front or back edge of pocket by 3/16-inch or more		232
	Insignia tab set crookedly		233
	Pocket divider not properly placed		234
Repairs	Any heat sealing repairs extending beyond 25-inches in length	130	
	More than five (5) repairs on any one (1) item	131	
Shaded part	Variation in shade within an outside part 1/	132	235
	Any part required to be cut from one (1) piece on material shaded 1/	133	236
	NOTE: Parts suspected as being shaded shall be examined at a distance of 3-feet against the background of the other parts and colors of the garment. When the shade difference is readily discernible under these examining conditions, it shall be scored as a shaded part.		
Fronts Length of fronts	Hem uneven by 1/4-inch or more at bottom when fastened		237
	Uneven by 1/4-inch or more at neck when fastened		238
	Flaps uneven by more than 1/4-inch when fastened		239
	Left flap less than 1/4-inch longer at bottom than right flap when fastened		240

TABLE IX. End item visual examination - Continued

		Classification	
Examination	Defect	Major	Minor
Bartacks	Bartack omitted	134	
	Any bartack not in specified location, insecure, or not serving intended purpose:		
	- more than two (2)	135	
	- two (2) or less		241
	Any loose stitching, incomplete or broken		242
	Length or width not as specified		243
Hood flap	Snaps not in locations specified	136	
	Loop fasteners not in locations specified	137	
	Not heat sealed	138	
Label/tag	Barcode omitted or not readable by scanner		244
	Human-Readable-Interpretation (HRI) omitted or illegible		245
	Not attached to location specified		246
	Causes damage to the garment	139	
Fastener tape hook & pile	Not properly placed	140	
	Not specified length		247

1/ This defect shall be scored as major when seriously affecting serviceability and as a minor when affecting serviceability but not seriously.

4.6.16 End item dimensional examination. The Jacket shall be examined for conformance to the dimensions specified in Table V. Any dimension not within the specified tolerance shall be classified as a defect. The lot size shall be expressed in units of jackets. The sample unit shall be one (1) jacket. Examination **must** include those measurements that are **not** cited "for construction purposes only", however, the measurements cited "for construction purposes only" may be included in the dimensional examination at the Government's discretion.

4.6.17 Hook and loop laundering durability test method procedures. The hook and loop tape shall meet the requirements stated in 3.6.4.2 when tested for laundry durability. Use test replica or garment test sample method to verify laundry durability.

4.6.17.1 Test replica sample preparation: Fabricate two (2) test replica samples from basic material paragraph 3.5.1.1 and 3.5.1.2. One (1) test replica sample shall contain hook tape on the outer surface and the other test replica sample shall contain loop tape on the outer surface. Finished dimensions of each test replica sample shall be 20-inches by 20-inches. The hook and loop tape, 3.6.4 to 3.6.4.2, sewn to the test sample shall represent production widths, lengths and quantities used in jacket fabrication. Evenly distribute hook and loop tape pieces on both sides of each test replica sample. Sewn hook and loop pieces with box stitch 1/8-inch to 3/16-inch from selvage using 301 stitch type. Insert fabric squares into test replica sample to achieve 1.4 pound minimum weight per test sample. Close test replica sample and stitch around entire sample to prevent curling and balling up of internal fabric squares.

4.6.17.2 Alternate garment test sample. As an alternate, used two (2) wind jackets sewn with representative hook and loop tapes used in production shall be laundered as a set. To assess worse case situation of hook and loop failure during laundry test, do not engage hook and loop tapes or slide fastener (zipper).

4.6.17.3 Wash procedures for test replica samples or alternate garment test samples. Launder two (2) test replica samples, one (1) hook sample and one (1) loop sample, or two (2) wind jackets with test method AATCC-150 which includes sample and ballast load weighing a total of 4-pounds. NOTE: For Garment Sample – do not engage hook and loop tapes to represent worse case situation. Wash setting shall be Permanent Press, 140°F wash and 80°F rinse with a 10 minute agitation time. Use 66 grams of detergent conforming to 1993 AATCC detergent without bleach for each laundering. Drying time shall be Permanent Press for 40-45 minutes.

4.6.17.4 Number of laundering/drying cycles. A total of 15 laundering and drying cycles for each test replica sample set or wind jackets.

5. PACKAGING

5.1 Packaging. For acquisition purposes, the packaging requirements shall be as specified in the contract or order (see 6.2). When packaging of materiel is to be performed by DoD or in-house contractor personnel, these personnel need to contact the responsible packaging activity to ascertain packaging requirements. Packaging requirements are maintained by the Inventory Control Point's packaging activities within the Military Service or Defense Agency, or within the military service's system commands. Packaging data retrieval is available from the managing Military Department's or Defense Agency's automated packaging files, CD-ROM products, or by contacting the responsible packaging activity.

6. NOTES

(This section contains information of a general or explanatory nature that may be helpful, but is not mandatory or contractually binding).

6.1 Intended use. The ECWCS, GEN III, Soft Shell Jacket is for wear by soldiers, as a separate outer garment, or as a part/layer of multi-component Extended Cold Weather Clothing System. The principle purpose is to provide protection against the adverse effects of cold/wet weather.

6.2 Acquisition requirements. Acquisition documents must specify the following:

a. Title, number, and date of this Purchase Description.
b. Type, class, and size required (see 1.2)
c. Camouflage pattern drawing, if required (see 3.5.1.4)
d. When a first article is required (see 3.1, 4.2, and 6.3)
e. Toxicity when required (3.12, 4.6.14)
f. Packaging (see 5.1)

6.3 First article. When a first article is required, it shall be inspected and approved under the

appropriate provision of FAR 52.209. First article should be a preproduction sample. The contracting officer should specify the appropriate type of first article and the number of units to be furnished. The contracting officer should also include specific instructions in acquisition documents regarding arrangements for selection, inspection, and approval of the first article.

6.4 Standard shade samples. For access to standard samples, address the contracting activity issuing the invitation for bids or request for proposal.

6.5 Subject terms (key word) list.
Clothing
ECWCS
Extended Clothing System
Operation Enduring Freedom Camouflage Pattern (OEF-CP)
Operational Camouflage Pattern (OCP)
Protection
Universal Camouflage Pattern (UCP)

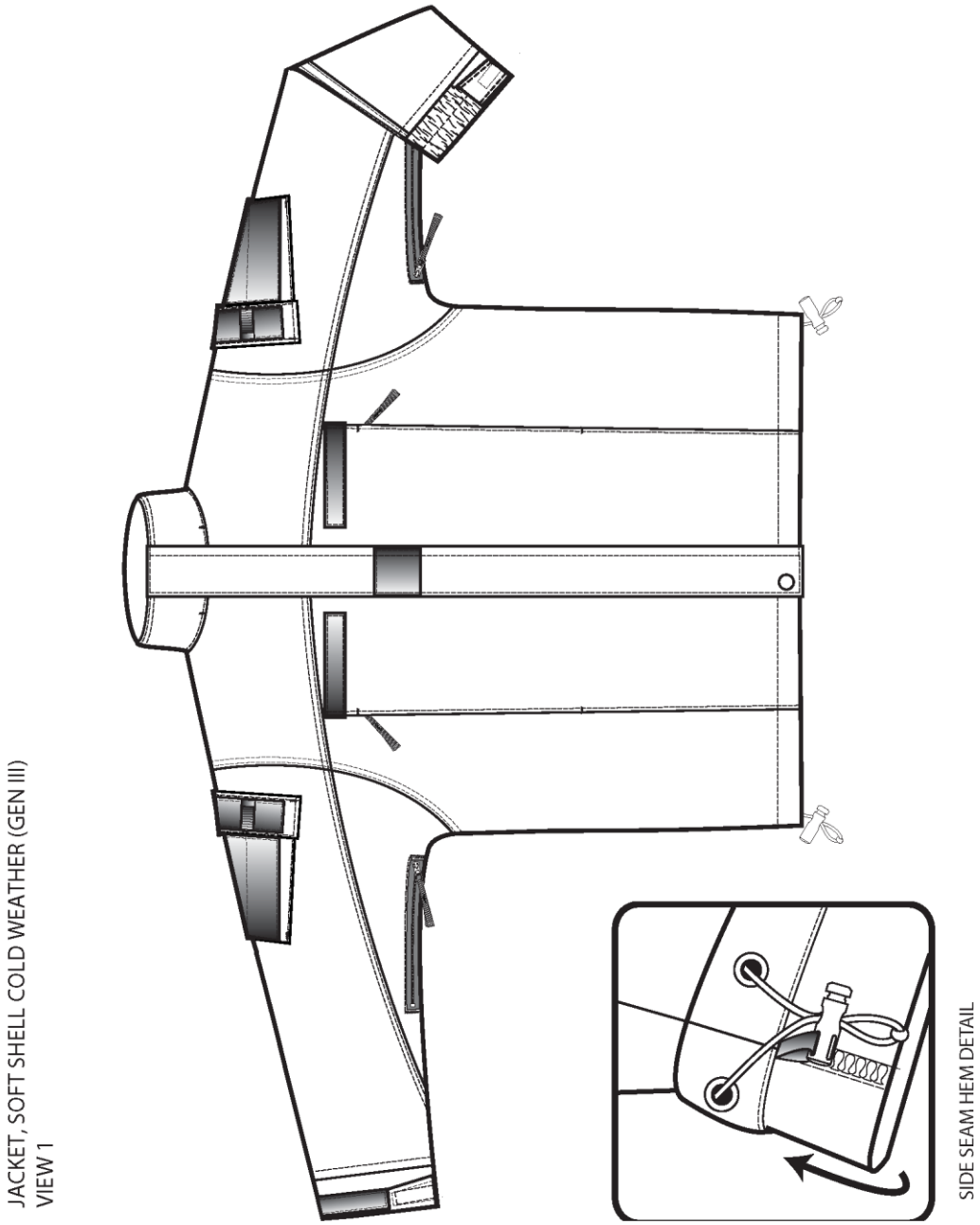

FIGURE 1. Jacket, soft shell cold weather (GEN III), front view

JACKET, SOFT SHELL COLD WEATHER (GEN III)
View 2

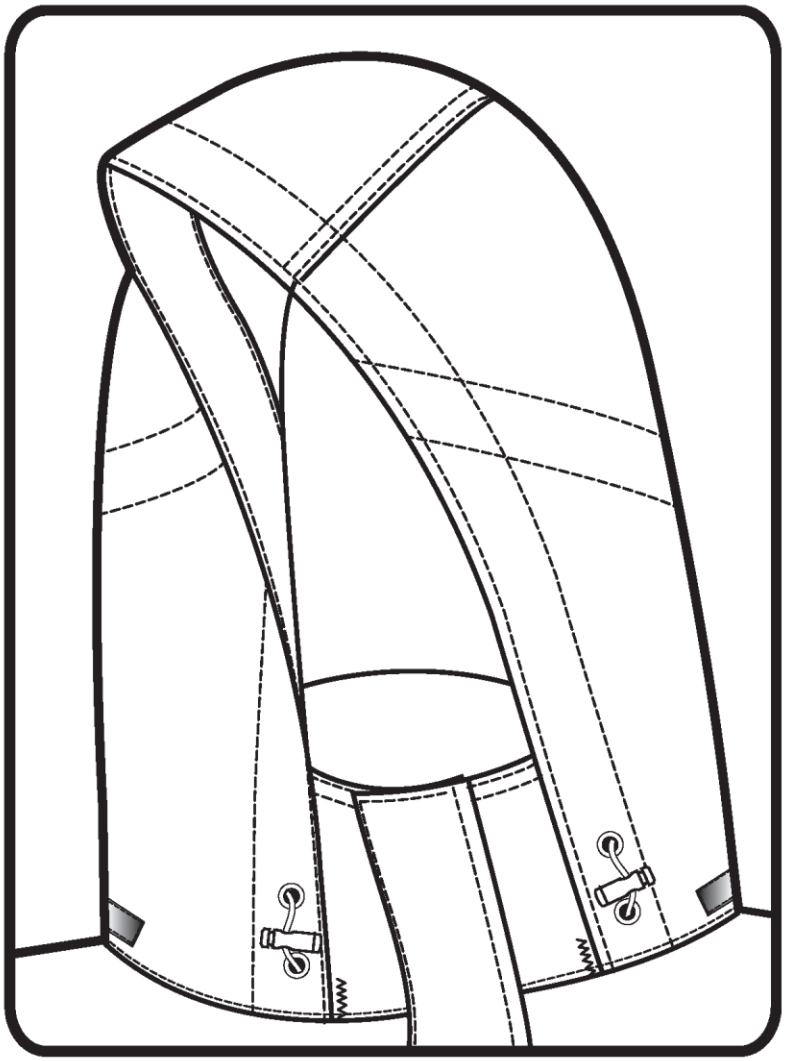

FIGURE 2. Jacket, soft shell cold weather (GEN III), hood

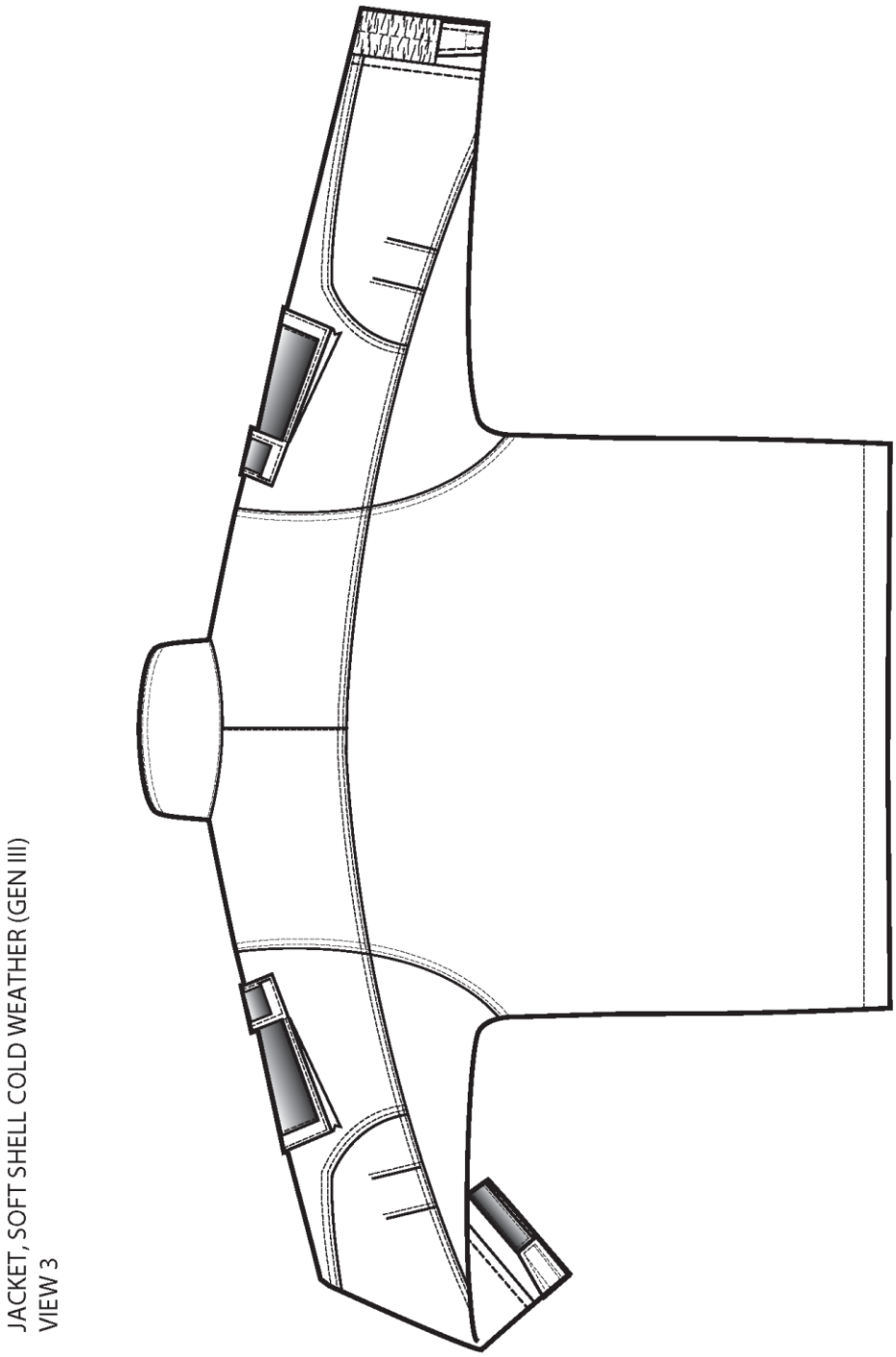

FIGURE 3. Jacket, soft shell cold weather (GEN III), back view

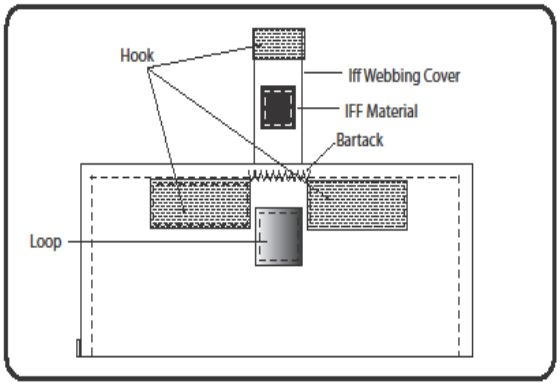

VIEW 1b (under side of flap)

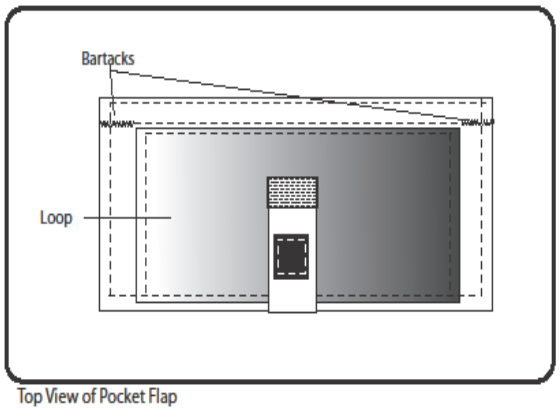

Top View of Pocket Flap

Pocket Flap View (Under side of flap)
Pocket Flap View (Top View of Pocket Flap)

FIGURE 4. Jacket, soft shell cold weather (GEN III), pocket flaps

CUSTODIAN:

Army – GL

PREPARING ACTIVITY:

Army - GL