HOT SPRINGS NATIONAL PARKS

HOT SPRINGS, ARKANSAS

DESIGN AND INSTALL FIRE ALARM AND SUPPRESSION IN QUARTERS 70A/B AND 71A/B
100% FINAL CONSTRUCTION DOCUMENTS SUBMITTAL

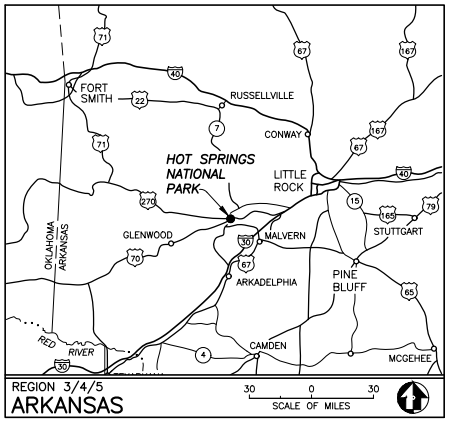

SHEET INDEX

1	G1	COVER PAGE
2	G2	GENERAL NOTES
3	G3	CODE ANALYSIS
4	G4	CODE ANALYSIS
5	G5	LIFE SAFETY PLANS
6	FP1.1	BLDG 70 FIRE PROTECTION BASEMENT FLOOR PLAN
7	FP1.2	BLDG 70 FIRE PROTECTION FIRST FLOOR PLAN
8	FP1.3	BLDG 70 FIRE PROTECTION SECOND FLOOR PLAN
9	FP1.4	BLDG 70 FIRE PROTECTION DETAILS
10	FP2.1	BLDG 71 FIRE PROTECTION BASEMENT FLOOR PLAN
11	FP2.2	BLDG 71 FIRE PROTECTION FIRST FLOOR PLAN
12	FP2.3	BLDG 71 FIRE PROTECTION SECOND FLOOR PLAN
13	FP2.4	BLDG 71 FIRE PROTECTION DETAILS
14	FA1.1	BLDG 70 FIRE AND CO ALARM BASEMENT FLOOR PLAN
15	FA1.2	BLDG 70 FIRE AND CO ALARM FIRST FLOOR PLAN
16	FA1.3	BLDG 70 FIRE AND CO ALARM SECOND FLOOR PLAN
17	FA2.1	BLDG 71 FIRE AND CO ALARM BASEMENT FLOOR PLAN
18	FA2.2	BLDG 71 FIRE AND CO ALARM FIRST FLOOR PLAN
19	FA2.3	BLDG 71 FIRE AND CO ALARM SECOND FLOOR PLAN

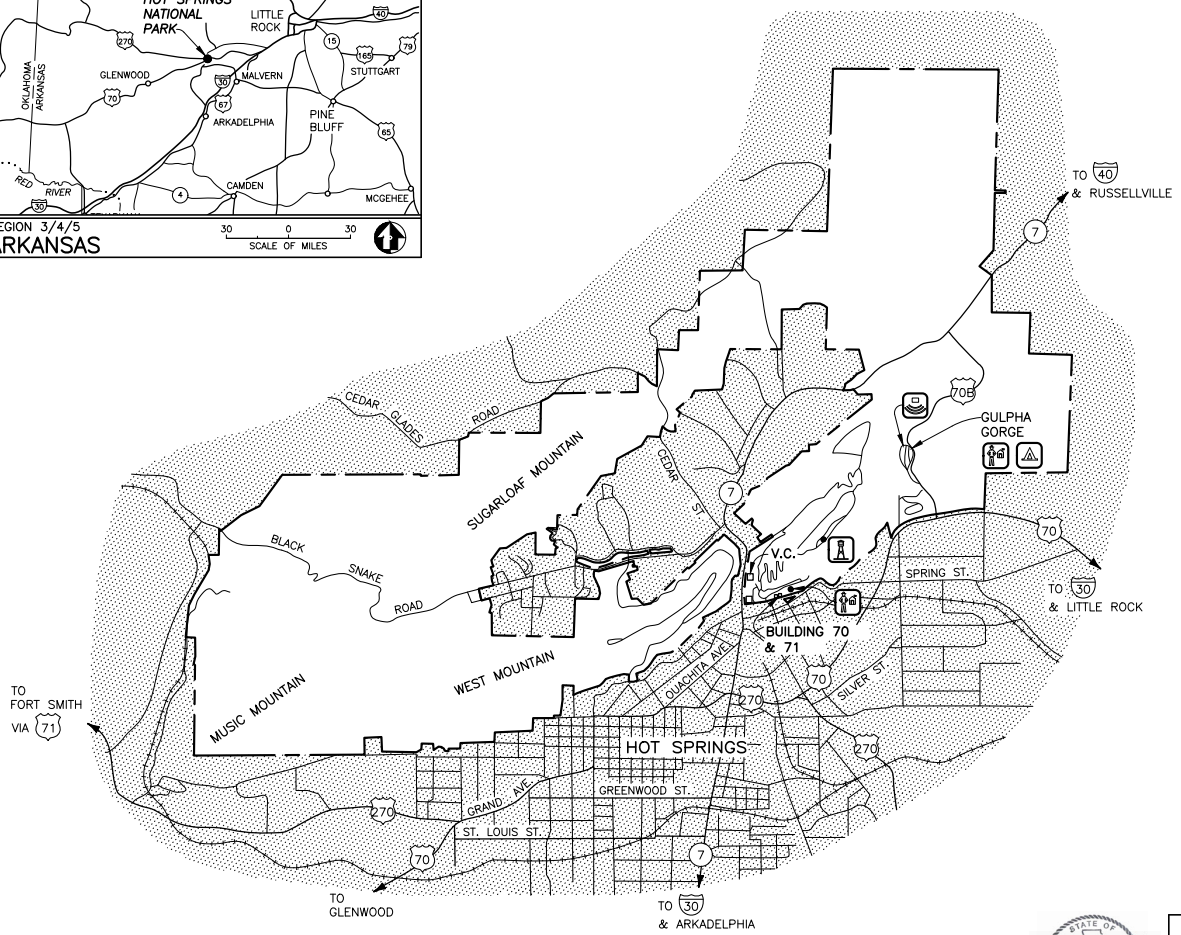

PROJECT ADDRESS

QUATERS 70A	521 RESERVE STREET, HOT SPRINGS AR 71901
QUATERS 70B	523 RESERVE STREET, HOT SPRINGS AR 71901
QUATERS 71A	525 RESERVE STREET, HOT SPRINGS AR 71901
QUATERS 71B	527 RESERVE STREET, HOT SPRINGS AR 71901

HOT SPRINGS NATIONAL PARK

STATE OF ARKANSAS PROFESSIONAL ENGINEER No. 17048 MICHAEL JONATHAN SHUMPERT
3/30/2026

DESIGN DEVELOPMENT	TITLE OF PROJECT: FIRE ALARM & SPRINKLER SYSTEM DESIGN	DRAWING NO. 128 80081
UNITED STATES DEPARTMENT OF THE INTERIOR	NAME OF PARK: HOT SPRINGS NATIONAL PARK	PMIS/PKG NO. 245945
NATIONAL PARK SERVICE REGION 3/4/5	REGION: REGION 3/4/5 · COUNTY: GARLAND · STATE: ARKANSAS	SHEET 1 OF 19

DEMOLITION GENERAL NOTES:

1. ALL DEMOLITION WORK SHALL BE LIMITED TO THE MINIMUM NECESSARY AND PERFORMED IN A MANNER THAT PRESERVES EXISTING HISTORIC MATERIALS, FEATURES, AND CHARACTER-DEFINING ELEMENTS. PRIOR TO COMMENCEMENT OF DEMOLITION, APPROVAL OF THE NATURE OF WORK AND THE EXTENT OF IMPACTS TO HISTORIC FABRIC SHALL BE OBTAINED FROM THE AUTHORITY HAVING JURISDICTION AND/OR HISTORIC PRESERVATION AUTHORITY. DEMOLITION WORK SHALL COMPLY WITH THE NATIONAL PARK SERVICE (NPS) SECRETARY OF THE INTERIOR'S STANDARDS FOR THE TREATMENT OF HISTORIC PROPERTIES. ANY DAMAGE TO HISTORIC FABRIC CAUSED BY DEMOLITION SHALL BE REPAIRED OR RESTORED IN KIND.
2. THE EXISTING CONDITIONS WERE DEVELOPED BASED ON AVAILABLE AS-BUILT DRAWINGS AND LIMITED FIELD OBSERVATIONS. ALLOW FOR VARIANCE IN DEVICES DEPICTED ON DRAWINGS AND UNFORESEEN CONDITIONS.
3. COORDINATE DEMOLITION WORK WITH NEW WORK. IF UNDOCUMENTED CONDITIONS EXIST THAT IMPACT DEMOLITION, CONTACT THE CONTRACTING OFFICER BEFORE PROCEEDING.
4. PROTECT EXISTING CONDITIONS INCLUDING BUT NOT LIMITED TO: STRUCTURES, CEILING, WALLS, WALL COVERINGS FURNITURE, EQUIPMENT, UTILITIES, ECT. DAMAGE TO EXISTING CONDITIONS SHALL BE REPAIRER AT NO ADDITIONAL COST TO THE GOVERNMENT.
5. PATCH AND REPAIR FLOORS, CEILINGS AND WALLS TO MATCH EXISTING CONDITIONS IN ALL AREAS IMPACTED BY THE DEMOLITION.
6. BUILDINGS WILL BE OCCUPIED DURING CONSTRUCTION. COORDINATE WORK SCHEDULE WITH NPS STAFF PRIOR TO COMMENCING WORK. CONTRACTOR SHALL BE RESPONSIBLE FOR WORKING AROUND OCCUPANT SCHEDULE AS DETERMINED BY THE NPS AND MAINTAIN MINIMUM IMPACT DUE TO CONSTRUCTION.

ASBESTOS AND LEAD-BASED PAINT AWARENESS:

1. ASBESTOS AWARENESS: TESTING FOR ASBESTOS HAS NOT BEEN PERFORMED WITHIN THE BUILDING'S OF THIS PROJECT. ASBESTOS CONTAINING MATERIALS (ACM) CAN BE PRESENT WITHIN OLDER BUILDING MATERIALS AND THE CONTRACTOR IS HEREBY ADVISED THAT A POTENTIAL FOR ASBESTOS HAZARD EXISTS. THE CONTRACTOR, AT HIS/HER DISCRETION, MAY PERFORM SPOT-TESTING OR OTHER MEANS TO IDENTIFY ACM WHERE DEMOLITION OR CONSTRUCTION IS DESIRABLE, OR PRIOR TO ANY EMPLOYEE TASK THAT MIGHT SUBJECT WORKERS TO ASBESTOS HAZARDS. IF ACM IS DISCOVERED, CONTACT THE GOVERNMENT REPRESENTATIVE AND COMPLY WITH OCCUPATIONAL SAFETY AND HEALTH ADMINISTRATION (OSHA) 29 CFR 1926.1101. THIS REGULATION REQUIRES THE CONTRACTOR TO DEVELOP WORK STRATEGIES THAT MINIMIZE EXPOSURE TO ASBESTOS HAZARDS.

2. LEAD-BASED PAINT INVESTIGATION AND TESTING HAS NOT BEEN PERFORMED ON PAINTED SURFACES IN THE PROJECT AREA FOR LEAD CONTENT. LEAD CAN BE PRESENT IN OLDER-PAINTED FINISHES, AND THE CONTRACTOR IS HEREBY ADVISED THAT A POTENTIAL FOR LEAD HAZARD EXISTS. THE CONTRACTOR, AT HIS/HER DISCRETION, MAY EMPLOY CHEMICAL SPOT-TESTING OR OTHER MEANS TO IDENTIFY LEAD COATINGS WHERE MANUAL DEMOLITION IS DESIRABLE, OR PRIOR TO ANY EMPLOYEE TASK THAT MIGHT SUBJECT WORKERS TO LEAD HAZARDS. IF LEAD-BASED PAINT IS DISCOVERED, CONTACT THE GOVERNMENT REPRESENTATIVE AND COMPLY WITH OCCUPATIONAL SAFETY AND HEALTH ADMINISTRATION (OSHA) 29 CFR 1926.62. THIS REGULATION REQUIRES THE CONTRACTOR TO DEVELOP WORK STRATEGIES THAT MINIMIZE EXPOSURE TO LEAD HAZARDS.

GENERAL INSTALLATIONS NOTES:

1. ALL NEW WORK SHALL BE DESIGNED AND EXECUTED TO MINIMIZE IMPACT TO EXISTING HISTORIC MATERIALS AND CHARACTER-DEFINING FEATURES WHILE MAINTAINING CODE COMPLIANCE. PRIOR TO COMMENCEMENT OF NEW WORK, APPROVAL OF THE NATURE OF WORK AND THE EXTENT OF IMPACTS TO HISTORIC FABRIC SHALL BE OBTAINED FROM THE AUTHORITY HAVING JURISDICTION AND/OR HISTORIC PRESERVATION AUTHORITY. ALL NEW WORK SHALL COMPLY WITH THE NATIONAL PARK SERVICE (NPS) SECRETARY OF THE INTERIOR'S STANDARDS FOR THE TREATMENT OF HISTORIC PROPERTIES. NEW MATERIALS AND INSTALLATIONS SHALL BE COMPATIBLE WITH THE EXISTING HISTORIC CHARACTER.

2. THE FIRE PROTECTION DESIGN IS DELEGATED DESIGN AND SHOULD BE READ IN CONJUNCTION WITH SPECIFICATION SECTIONS 21 05 00.

3. THE DESIGN AND INSTALLATION OF THE FIRE SPRINKLER SYSTEM SHALL BE IN ACCORDANCE WITH THE INTERNATIONAL RESIDENTIAL CODE (IRC)(2024 EDITION), INTERNATIONAL FIRE CODE (IFC)(2024 EDITION), NFPA 13D (2025 EDITION), NFPA 101 (2024 EDITION), NPS RM-58, LOCAL PLUMBING CODES, AND ANY LOCAL AMENDMENTS.

4. THE FIRE SMOKE AND CARBON MONOXIDE ALARM SYSTEM IS DELEGATED DESIGN AND SHOULD BE READ IN CONJUNCTION WITH DIVISION 26 SPECIFICATIONS.

5. THE DESIGN AND INSTALLATION OF THE SMOKE AND CARBON MONOXIDE ALARM SYSTEM WITH INTEGRAL STROBES SHALL BE IN ACCORDANCE WITH NPS RM-58, IRC (2024 EDITION), NATIONAL ELECTRICAL CODE (2023 EDITION) AND NFPA 72 (2025 EDITION).

6. THE EXISTING CONDITIONS AND INSTALLATION PLANS WERE DEVELOPED BASED ON PROVIDED AS-BUILT DRAWINGS AND FIELD VISUAL VERIFICATION WHERE POSSIBLE. CONTRACTOR SHALL FIELD VERIFY EXISTING CONDITIONS PRIOR TO BID SUBMITTAL.

7. PROVIDE A COMPLETE FIRE SPRINKLER SYSTEM WITH ALL NECESSARY EQUIPMENT, APPURTENANCES, AND CONTROLS, COMPLETELY COORDINATED WITH ALL DISCIPLINES. ALL PARAMETERS GIVEN AND LABOR REQUIRED FOR A COMPLETE FIRE PROTECTION SYSTEM IN ACCORDANCE WITH ALL APPLICABLE CODES AND AMENDMENTS (INCLUDING, BUT NOT LIMITED TO, NFPA 13D), LOCAL AUTHORITIES, AND THESE CONTRACT DOCUMENTS SHALL BE FURNISHED WITHOUT INCURRING AN ADDITIONAL COST TO THE CONTRACT. CAREFULLY REVIEW ALL SPECIFICATIONS, CONTRACT DOCUMENTS, AND THE DESIGN OF OTHER TRADES BEFORE PREPARING SHOP DRAWINGS

8. ALL COMPONENTS AND ASSEMBLIES USED IN THIS FIRE PROTECTION SYSTEM SHALL BE UL LISTED OR FM APPROVED FOR OPERATION WITH EACH OTHER.

9. THESE PLANS ARE CONCEPTUAL ONLY AND ARE NOT INTENDED TO INDICATE EXACT QUANTITIES, SIZE, OR LOCATIONS OF EQUIPMENT AND BRANCH PIPING THAT MUST BE PROVIDED FOR INSTALLATION AS REQUIRED BY CODE. THE CONTRACTOR SHALL BE RESPONSIBLE TO VERIFY ALL EXISTING CONDITIONS. THE FINAL DESIGN OF THE SPRINKLER SYSTEMS SHALL BE THE RESPONSIBILITY OF THE CONTRACTOR.

10. THE CONTRACTOR IS RESPONSIBLE FOR EXECUTING A COMPLETE HYDRAULIC ANALYSIS OF THE SYSTEMS IN CONFORMANCE TO NFPA, AND SHALL VERIFY ALL SPRINKLER HEAD PLACEMENTS AND SIZE ALL SPRINKLER PIPING BASED ON THAT ANALYSIS AND ASSOCIATED HYDRAULIC CALCULATIONS PER NFPA 13D. INSTALLATION SHALL BE CAREFULLY COORDINATED WITH THE NATIONAL PARKS SERVICE AND EVERY EFFORT MADE TO PRESERVE THE HISTORIC ASPECT OF THE SITE.

GENERAL INSTALLATION NOTES (CONTINUED):

11. INSTALLATION OF THE SPRINKLER SYSTEMS SHALL BE DONE IN SUCH A MANNER AS TO MINIMIZE DISRUPTION TO THESE UNIQUE HISTORIC BUILDINGS. EVERY EFFORT TO MINIMIZE DAMAGE TO THE WALLS, CEILINGS, AND OTHER BUILDING COMPONENTS SHALL BE MADE. EXISTING PENETRATIONS SHALL BE UTILIZED FOR THE NEW WET PIPE FIRE SPRINKLER SYSTEM WHEREVER POSSIBLE. ALL WORK SHALL BE APPROVED BY THE NATIONAL PARKS SERVICE PRIOR TO BEING INITIATED.

12. WET PIPE SPRINKLER SYSTEMS SHALL HAVE PIPING SLOPED IN ACCORDANCE WITH NFPA 13D REQUIREMENTS. A WALL MOUNTED NITROGEN GENERATING SYSTEM SHALL BE PROVIDED FOR ALL WET PIPE SPRINKLER SYSTEMS.

13. INTERMEDIATE TEMPERATURE CLASSIFICATION SPRINKLER HEADS SHALL BE PROVIDED IN THE ATTICS, CONCEALED SPACES, ELECTRICAL ROOMS, AND OTHER MECHANICAL EQUIPMENT SPACES.

14. ALL FIRE SPRINKLER PIPING SHALL BE COPPER AND/OR CPVC. EXPOSED PIPING ON FIRST AND SECOND FLOOR SHALL BE PAINTED TO MATCH THE COLOR OF THE ADJACENT SURFACE.

15. CONTRACTOR SHALL ROUTE PIPE TO MINIMIZE LOW POINT DRAINS. IF A LOW POINT DRAIN IS NEEDED, IT SHALL BE INSTALLED IN A LOCATION THAT IS NOT SUBJECT TO FREEZING AND ACCESSIBLE FOR FUTURE MAINTENANCE. FINAL LOCATION SHALL BE COORDINATED WITH NATIONAL PARK SERVICE CONTRACTING OFFICER.

16. CONTRACTOR SHALL BE RESPONSIBLE FOR PROTECTING ALL EXISTING CONDITIONS INCLUDING BUT NOT LIMITED TO: STRUCTURES, CEILINGS, WALLS AND EXISTING EQUIPMENT/UTILITIES TO REMAIN. DAMAGE TO EXISTING CONDITIONS SHALL BE REPAIRED AT NO ADDITIONAL COST TO NATIONAL PARK SERVICE.

17. CONTRACTOR SHALL BE RESPONSIBLE FOR PATCHING AND REPAIRING FLOORS, CEILINGS, AND WALLS TO MATCH EXISTING CONDITIONS IN ALL AREAS IMPACTED BY THE DEMOLITION OF THE EXISTING FIRE PROTECTION SYSTEM(S) AND INSTALLATION OF THE NEW FIRE PROTECTION SYSTEM(S).

18. PROVIDE ELECTRICAL CONNECTIONS FOR EQUIPMENT SHOWN ON CONTRACT DOCUMENTS. REFER TO THE CONTRACT DOCUMENTS TO DETERMINE ELECTRICAL CONNECTION REQUIREMENTS AND MOUNTING LOCATIONS FOR EQUIPMENT REQUIRING ELECTRICAL CONNECTIONS.

STATE OF ARKANSAS PROFESSIONAL ENGINEER No. 17048 MICHAEL JONATHAN SHUMPERT
3/30/2026

DESIGNED: R. RICHTER CADD: T. FREEMAN TECH. REVIEW: M. SHUMPERT DATE: 03/30/2026	SUB SHEET NO. G2	TITLE OF SHEET GENERAL NOTES HOT SPRINGS NATIONAL PARK HOT SPRINGS, ARKANSAS	DRAWING NO. 80081 128 PMIS/PKG NO. 245945 SHEET 2 OF 19

CODE ANALYSIS

1.0 INTRODUCTION - PROJECT DESCRIPTION

THIS PROJECT INVOLVES THE DESIGN AND INSTALLATION OF FIRE ALARM AND FIRE SUPPRESSION SYSTEMS IN QUARTERS 70A/B AND 71A/B AT HOT SPRINGS NATIONAL PARK (HOSP), ARKANSAS, UNDER NPS PMIS #245945. THE PURPOSE OF THIS CODE REVIEW NARRATIVE IS TO PROVIDE A FOUNDATION FOR UNDERSTANDING THE PLANNED FIRE ALARM AND SUPPRESSION SYSTEM UPGRADES FOR THESE FACILITIES. THIS DOCUMENT OUTLINES AND ANALYZES THE APPLICABLE CODES AND STANDARDS GOVERNING THE DESIGN AND INSTALLATION OF THESE SYSTEMS TO ACHIEVE COMPLIANCE WITH ESTABLISHED REQUIREMENTS FOR FIRE PROTECTION AND OCCUPANT SAFETY. THE AUTHORITY HAVING JURISDICTION (AHJ) FOR THIS PROJECT IS THE NATIONAL PARK SERVICE (NPS).

THIS PROJECT INVOLVES THE DESIGN AND INSTALLATION OF FIRE PROTECTION AND LIFE SAFETY SYSTEMS FOR TWO HISTORIC DUPLEX RESIDENTIAL BUILDINGS, QUARTERS 70A/70B AND QUARTERS 71A/71B, CONSTRUCTED IN THE 1930S AS ARMY-NAVY GENERAL HOSPITAL DOUBLE NCO QUARTERS AND PROPOSED FOR RESTORATION TO THEIR ORIGINAL RESIDENTIAL USE AS TEMPORARY NATIONAL PARK SERVICE (NPS) EMPLOYEE HOUSING. QUARTERS 71A/71B ARE CURRENTLY USED BY LAW ENFORCEMENT PERSONNEL DURING NORMAL BUSINESS HOURS, QUARTERS 70A IS USED FOR LAW ENFORCEMENT FITNESS ACTIVITIES, AND QUARTERS 70B IS VACANT AND USED FOR STORAGE; HOWEVER, THESE INTERIM USES DID NOT INVOLVE PERMANENT ALTERATIONS TO THE RESIDENTIAL LAYOUT OR LIFE SAFETY FEATURES AND DO NOT CONSTITUTE A CHANGE OF OCCUPANCY CLASSIFICATION. THE PROPOSED WORK RESTORES THE BUILDINGS TO THEIR HISTORIC DUPLEX DWELLING FUNCTION WITH NO INCREASE IN THE NUMBER OF DWELLING UNITS OR OCCUPANT LOAD.

THE SCOPE INCLUDES INSTALLATION OF SINGLE-STATION FIRE ALARM AND CARBON MONOXIDE DETECTORS, AN NFPA 13D WET-PIPE AUTOMATIC SPRINKLER SYSTEM, AND LOCAL ALARM NOTIFICATION IN ACCORDANCE WITH APPLICABLE FIRE CODES AND NPS STANDARDS. FIRE PROTECTION PIPING WILL BE ROUTED FROM THE BASEMENT UP

BE INSTALLED IN SOFFITS WITH MINIMAL WALL AND FLOOR PENETRATIONS; THE WORK IS LIMITED TO THE INTERIOR OF THE BUILDINGS, AND THEREFORE NO EXTERIOR GROUND DISTURBANCE OR IMPACTS TO EXTERIOR HISTORIC BUILDING AESTHETICS ARE ANTICIPATED. A PASSAGE OPENING THAT INTERCONNECTS QUARTERS 71A AND 71B KITCHENS WILL BE INFILLED WITH A RATED WALL ASSEMBLY TO RESTORE TWO SEPARATE DUPLEXES.

EACH DUPLEX WILL ACCOMMODATE UP TO SIX OCCUPANTS AND BASED ON THE EXISTING CONDITIONS, LIMITED SCOPE OF WORK, AND RESIDENTIAL USE, THE PROJECT WAS EVALUATED UNDER THE IBC, IEBC, AND APPLICABLE NPS PRESERVATION BRIEFS, IS CLASSIFIED AS GROUP R-3 / RESIDENTIAL, AND, AS THE BUILDINGS ARE LESS THAN THREE STORIES IN HEIGHT, IT WAS DETERMINED THE BUILDINGS WOULD FALL WITHIN THE APPLICABILITY OF THE IRC FOR ONE- AND TWO-FAMILY DWELLINGS, AS OUTLINED HEREIN.

EACH DUPLEX WILL ACCOMMODATE UP TO THREE OCCUPANTS, FOR A MAXIMUM OF SIX OCCUPANTS TOTAL, AND BASED ON THE EXISTING CONDITIONS, LIMITED SCOPE OF WORK, AND RESIDENTIAL USE, THE PROJECT IS EVALUATED UNDER THE IBC, IEBC, AND APPLICABLE NPS PRESERVATION BRIEFS, IS CLASSIFIED AS GROUP R-3, AND, AS THE BUILDINGS ARE LESS THAN THREE STORIES IN HEIGHT, IS DETERMINED TO FALL WITHIN THE APPLICABILITY OF THE IRC FOR ONE- AND TWO-FAMILY DWELLINGS, AS OUTLINED HEREIN. EACH DUPLEX WILL ACCOMMODATE UP TO FOUR OCCUPANTS, FOR A MAXIMUM OF EIGHT OCCUPANTS TOTAL, AND BASED ON THE EXISTING CONDITIONS, LIMITED SCOPE OF WORK, AND RESIDENTIAL USE, THE DUPLEXES ARE CLASSIFIED AS GROUP R-3 OCCUPANCIES UNDER THE IBC AND IEBC, CONSISTENT WITH APPLICABLE NPS PRESERVATION BRIEFS; HOWEVER, BECAUSE THE BUILDINGS ARE DUPLEXES AND ARE LESS THAN THREE STORIES IN HEIGHT, THEY ARE GOVERNED BY THE IRC FOR ONE- AND TWO-FAMILY DWELLINGS.

1.1 DESIGN CODES

BUILDING CODE (IBC)	2024 INTERNATIONAL BUILDING CODE
EXISTING BUILDING CODE (IEBC)	2024 INTERNATIONAL EXISTING BUILDING CODE
RESIDENTIAL CODE (IRC)	2024 INTERNATIONAL RESIDENTIAL CODE
PROPERTY MAINTENANCE CODE (IPMC)	2024 INTERNATIONAL PROPERTY MAINTENANCE CODE
MECHANICAL CODE (IMC)	2024 INTERNATIONAL MECHANICAL CODE
PLUMBING CODE (IPC)	2024 INTERNATIONAL PLUMBING CODE
ELECTRICAL CODE (NEC)	2023 NATIONAL ELECTRIC CODE, NFPA 70
FUEL GAS CODE (IFGC)	2024 INTERNATIONAL FUEL GAS CODE
FIRE CODE (IFC)	2024 INTERNATIONAL FIRE CODE
WILDLAND CODE (IWUIC)	2024 INTERNATIONAL WILDLAND-URBAN INTERFACE CODE

1.2 OTHER STANDARDS AND REFERENCE GUIDES:

NATIONAL FIRE PROTECTION ASSOCIATION (NFPA) STANDARDS - LATEST EDITION

NPS HANDBOOKS, REFERENCE MANUALS (RMs), BRIEFS, AND OTHER PROFESSIONAL MATERIALS

ARCHITECTURAL BARRIERS ACT (ABA); 2004

ACCESSIBILITY & UNIVERSAL DESIGN STANDARDS

CLASSIFICATION OF WORK

2.0 IBC, IEBC, AND IRC - CLASSIFICATION OF WORK

SUMMARY OF SCOPE OF WORK:

- ADD NFPA 13D FIRE SPRINKLER SYSTEMS
- ADD SINGLE-STATION FIRE ALARM AND CARBON MONOXIDE DETECTION PER NEC AND NFPA 72
- INFILL A NON-ORIGINAL INTERCONNECTION OPENING BETWEEN QUARTERS 71A AND 71B WITH A RATED WALL ASSEMBLY
- SUPPORTING INTERIOR WORK NECESSARY TO COMPLETE THE INSTALLATION OF FIRE PROTECTION, ALARM, AND DETECTION SYSTEMS

IBC OCCUPANCY CLASSIFICATION:
FOR THE PURPOSE OF CODE CLASSIFICATION, THE BUILDINGS ARE EVALUATED UNDER THE INTERNATIONAL BUILDING CODE (IBC) AND ARE CLASSIFIED AS GROUP R-3 OCCUPANCY, CONSISTENT WITH THEIR HISTORIC AND PROPOSED USE AS DUPLEX RESIDENTIAL DWELLINGS. THE PROPOSED WORK DOES NOT RESULT IN A CHANGE OF OCCUPANCY CLASSIFICATION, HAZARD CATEGORY, OR OCCUPANT LOAD.

IEBC COMPLIANCE METHOD (CHAPTER 5 – ALTERATIONS):
PER THE INTERNATIONAL EXISTING BUILDING CODE (IEBC), THIS PROJECT IS CLASSIFIED USING THE PRESCRIPTIVE COMPLIANCE METHOD FROM IEBC AS AN ALTERATION TO AN EXISTING BUILDING, CONSISTING OF THE ADDITION AND MODIFICATION OF FIRE PROTECTION AND LIFE SAFETY SYSTEMS. IN ACCORDANCE WITH THE PRESCRIPTIVE COMPLIANCE METHOD FROM IEBC CHAPTER 5, THE ALTERATIONS ARE SUCH THAT THE EXISTING BUILDINGS WILL BE NO LESS COMPLIANT WITH THE PROVISIONS OF THE ADOPTED BUILDING CODE THAN THEY WERE PRIOR TO THE ALTERATION.

- ALL NEW CONSTRUCTION COMPONENTS WILL BE INSTALLED ACCORDING TO THE IBC AND OTHER APPLICABLE CODES.
- THE SCOPE OF WORK DOES NOT AFFECT THE MEANS OF EGRESS.
- THE SCOPE OF WORK DOES NOT AFFECT THE STRUCTURAL INTEGRITY OF THE BUILDINGS.
- NO CHANGES TO STRUCTURAL BEARING WALLS OR MEMBERS ARE PROPOSED.
- THE WORK IMPROVES THE LEVEL OF FIRE PROTECTION PROVIDED TO THE BUILDINGS.
- ALL WORK IS LIMITED TO THE INTERIOR OF THE BUILDINGS, WITH NO INCREASE IN BUILDING AREA, HEIGHT, OR NUMBER OF DWELLING UNITS.
- BASED UPON THE ABOVE EVALUATION, THIS EXISTING BUILDING IS NOT REQUIRED BY THE IEBC TO BE BROUGHT INTO COMPLIANCE WITH THE LATEST EDITION OF THE IBC.

APPLICABILITY OF THE IRC:
ALTHOUGH EVALUATED UNDER THE IBC AND IEBC, THE BUILDINGS QUALIFY FOR REGULATION UNDER THE INTERNATIONAL RESIDENTIAL CODE (IRC). THE STRUCTURES ARE DUPLEXES (TWO-FAMILY DWELLINGS) AND ARE LESS THAN THREE STORIES IN HEIGHT ABOVE GRADE PLANE. ACCORDINGLY, AND CONSISTENT WITH IBC SECTION 101.2 AND IRC SECTION R101.2, THE DESIGN AND INSTALLATION OF RESIDENTIAL FIRE PROTECTION AND LIFE SAFETY SYSTEMS FOR THIS PROJECT ARE GOVERNED BY THE IRC.

CODE EVALUATIONS

3.0 DESCRIPTION

THE FOLLOWING CODE REVIEW NARRATIVE IS PROVIDED TO SERVE AS A BASIS OF UNDERSTANDING FOR THE DEVELOPMENT OF THE DESIGN, DRAWINGS, AND SPECIFICATIONS FOR THE IMPROVEMENTS BEING IMPLEMENTED AT THE EXISTING QUARTERS 70A/B AND 71A/B AT NPS HOSP ARKANSAS. IT SHOULD BE NOTED THAT BOTH BUILDINGS WERE CONSTRUCTED AT THE SAME TIME AND ARE IDENTICAL FLOOR PLATES.

3.1 GENERAL BUILDING DATA SUMMARY

OCCUPANCY CLASSIFICATION(S)	GROUP R-3 / RESIDENTIAL
BUILDING AREA	BASEMENT – 575 SQ FT PER BLDG. FIRST FLOOR – 1,670 SQ FT PER BLDG. SECOND FLOOR – 1,525 SQ FT PER BLDG. TOTAL SQ FT – 7,540 SQ FT (3,770 SQ FT QTRS 70A/B + 3,770 SQ FT QTRS 71A/B)
FIRE AREA	3,770 SQ FT QTRS 70A/B (SEPARATE BLDG.)
HEIGHT	~28' (BASEMENT AND 2 STORIES ABOVE GRADE)
TYPE OF CONSTRUCTION	V-B (COMBUSTIBLE)
FIRE SEPARATION DISTANCE	MORE THAN 30'-0"
FIRE PROTECTION SYSTEMS	FIRE HYDRANTS (EXISTING OWNED BY CITY OF HOT SPRINGS) FIRE SPRINKLERS, 13D SYSTEM (NEW PROVIDED AS PART OF THIS PROJECT) FIRE ALARM AND DETECTION: SINGLE-STATION SMOKE DETECTORS AND CO DETECTORS (NEW PROVIDED AS PART OF THIS PROJECT)
OCCUPANT LOAD (TOTAL)	3 OCCUPANTS PER BLDG. (BASED UPON NUMBER OF BEDROOMS PER BLDG)

3.2 CODE REQUIREMENTS

ELEMENT	COMPLIANCE REQUIREMENTS	PROVIDED	CODE REFERENCE
DECORATIVE STRUCTURES	NO DECORATIVE ELEMENTS OR FEATURES AFFECTING FIRE OR LIFE SAFETY ARE INCLUDED IN THE SCOPE OF WORK. EXISTING HISTORIC FINISHES WILL BE RETAINED.	NR	IBC §806.1; NPS PRESERVATION BRIEFS
DESIGN – UNIQUE ASPECTS	DESIGN MINIMIZES IMPACTS TO HISTORIC FABRIC BY ROUTING SPRINKLER PIPING THROUGH THE EXISTING HVAC CHASE (ADD AS PART OF AN HVAC UPGRADE PROJECT) AND EXPOSED PIPING ON FLOORS WITH MINIMAL PENETRATIONS. ALL WORK LIMITED TO INTERIOR SPACES; NO EXTERIOR OR GROUND DISTURBANCE.	NR	IEBC §503.1; IRC §R102.2; NPS PRESERVATION BRIEFS
EGRESS	SCOPE DOES NOT ALTER MEANS OF EGRESS, EXIT ACCESS, OR EXIT DISCHARGE. EXISTING EGRESS CONFIGURATION REMAINS COMPLIANT FOR GROUP R-3/RESIDENTIAL USE	NR	IRC §R318.1
DOORS	NO MODIFICATIONS TO EXISTING DOOR LOCATIONS, SWING, OR HARDWARE. EXISTING DOORS SERVING DWELLING UNITS REMAIN UNCHANGED.	NR	IRC §R318.2
EMERGENCY ESCAPE AND RESCUE OPENINGS	ALL THREE BEDROOMS ARE PROVIDED WITH EXISTING CODE COMPLIANT WINDOWS THAT SERVE AS EMERGENCY ESCAPE AND RESCUE OPENINGS. EXISTING WINDOW SIZES, LOCATIONS, AND OPERABILITY REMAIN UNCHANGED. IT SHOULD BE NOTED THAT, PER IPMC, DWELLING UNITS CONTAINING FEWER THAN TWO BEDROOMS ARE PERMITTED TO HAVE MEANS OF ACCESS THROUGH ANOTHER ROOM; HOWEVER, IN THIS EXISTING LAYOUT, BEDROOM 3 DOES NOT HAVE SEPARATE, DIRECT ACCESS AND REQUIRES PASSAGE THROUGH BEDROOM 2, WHICH MAY PRESENT A PRIVACY CONCERN. THIS CONDITION IS EXISTING AND SHOULD BE REVIEWED BY THE NPS FOR ACCEPTABILITY.	NR	IRC §R319.1; IPMC §R404.4.2
ELEVATORS	NO ELEVATOR IS PROVIDED OR REQUIRED FOR THIS PROJECT. SHOULD NPS ELECT TO DESIGNATE A UNIT AS ACCESSIBLE IN A FUTURE SCOPE OF WORK, ANY ELEVATOR INSTALLATION WOULD BE REQUIRED TO COMPLY WITH IRC §R323.	NR	IRC §R322.1

NOTE:
SEE SHEET G4 FOR CONTINUATION OF THE CODE ANALYSIS.

STATE OF ARKANSAS
PROFESSIONAL ENGINEER
No. 17048
MICHAEL JONATHAN SHUMPERT
3/30/2026

DESIGNED: R. RICHTER DRAWN: T. FREEMAN TECH. REVIEW: M. SHUMPERT DATE: 03/30/2026	SUB SHEET NO. G3	TITLE OF SHEET CODE ANALYSIS HOT SPRINGS NATIONAL PARK HOT SPRINGS, ARKANSAS	DRAWING NO. 128 80081 PMIS/PKG NO. 245945 SHEET 3 OF 19

FINISHES	EXISTING INTERIOR FINISHES REMAIN. NO NEW INTERIOR FINISH MATERIALS THAT WOULD ADVERSELY AFFECT FLAME SPREAD OR SMOKE DEVELOPMENT ARE INTRODUCED.	NR	IRC §R302.8.1; IRC §R302.9
CEILING	EXISTING CEILING ASSEMBLIES REMAIN. LIMITED PENETRATIONS FOR SPRINKLER PIPING AND HEADS, PENETRATIONS WILL BE SEALED TO MAINTAIN REQUIRED FIRE-RESISTANCE RATINGS AS APPLICABLE.	NR	IRC §R302.8.1; IRC §R302.9
FLOOR	NO MODIFICATIONS TO FLOOR ASSEMBLIES. PENETRATIONS FOR PIPING ARE PROTECTED TO MAINTAIN INTEGRITY OF EXISTING ASSEMBLIES.	NR	IRC §R302.13
INTERIOR WALLS	INFILL OF THE NON ORIGINAL KITCHEN CONNECTION BETWEEN QUARTERS 71A AND 71B WILL BE COMPLETED WITH A 1 HOUR FIRE RESISTIVE WALL ASSEMBLY TO RESTORE TWO INDEPENDENT DUPLEX UNITS. THE NEW ASSEMBLY WILL PROVIDE A 1 HOUR FIRE RESISTANCE RATING, EXCEEDING THE MINIMUM ONE HALF HOUR REQUIREMENT FOR SPRINKLERED BUILDINGS.	YES	IRC §R302.9
SMOKE ALARMS	INSTALLATION OF SINGLE STATION SMOKE ALARMS WITH INTEGRATED STROBE NOTIFICATION SHALL BE PROVIDED WITHIN EACH DWELLING UNIT. INTERCONNECTED ALARMS SHALL BE INSTALLED IN ALL SLEEPING ROOMS, OUTSIDE EACH SLEEPING AREA, AND ON EACH LEVEL OF THE DWELLING, IN ACCORDANCE WITH THE IRC AND MANUFACTURER'S INSTALLATION RECOMMENDATIONS.	YES	IRC §R310
CARBON MONOXIDE ALARMS	INSTALLATION OF CARBON MONOXIDE ALARMS WITH INTEGRATED STROBE NOTIFICATION SHALL BE PROVIDED WITHIN EACH DWELLING UNIT. CO ALARMS SHALL BE INSTALLED OUTSIDE EACH SLEEPING AREA, ON EACH LEVEL OF THE DWELLING, AND IN LOCATIONS CONTAINING FUEL BURNING APPLIANCES, IN ACCORDANCE WITH THE IRC AND MANUFACTURER'S INSTALLATION RECOMMENDATIONS.	YES	IRC §R311
COMMUNICATION SYSTEM	THE SMOKE ALARMS AND CARBON MONOXIDE ALARMS ARE NOT REQUIRED TO BE CONNECTED TO A BUILDING FIRE ALARM SYSTEM, WHICH WOULD OTHERWISE NECESSITATE SYSTEM MONITORING AND REPORTING. LOCAL OCCUPANT NOTIFICATION IS PROVIDED THROUGH SINGLE STATION ALARMS.	NR	IRC §R310; IRC §R311
FIRE DEPARTMENT ACCESS	NO CHANGES TO EXTERIOR FIRE DEPARTMENT ACCESS. EXISTING SITE ACCESS REMAINS UNCHANGED AND ADEQUATE.	NR	IFC §503
FIRE-RESISTIVE SEPARATIONS	A 1 HOUR FIRE RESISTANCE RATED SEPARATION BETWEEN DWELLING UNITS SHALL BE MAINTAINED. QUARTERS 71 WILL REQUIRE A NEW INFILL WALL TO RESTORE THE SEPARATION, AND THE NEW ASSEMBLY WILL BE CONSTRUCTED TO MEET OR EXCEED THE REQUIRED 1 HOUR RATING.	YES	IRC §R302.3.2

POWER	SMOKE ALARMS AND CARBON MONOXIDE ALARMS SHALL BE POWERED BY THE BUILDING'S ELECTRICAL SYSTEM, AS REQUIRED FOR SINGLE STATION ALARMS.	YES	IRC §R310.6; IRC §R311.6
EMERGENCY POWER	SMOKE ALARMS AND CARBON MONOXIDE ALARMS SHALL BE PROVIDED WITH AN INTEGRAL BATTERY BACKUP TO ENSURE OPERATION DURING LOSS OF PRIMARY POWER.	YES	IRC §R310.6; IRC §R311.6
STANDBY POWER	STANDBY POWER NOT REQUIRED.	NR	IRC §R310.6; IRC §R311.6
SMOKE MANAGEMENT DESCRIPTION	NO ENGINEERED SMOKE CONTROL SYSTEM REQUIRED FOR LOW-RISE GROUP R-3/RESIDENTIAL BUILDINGS.	NR	IBC §909.1
SUPPRESSION SYSTEMS	IN ACCORDANCE WITH NPS STRUCTURAL FIRE PROGRAM REQUIREMENTS, AND NOTWITHSTANDING THE EXCEPTION IN IRC SECTION R209.2, AN NFPA 13D WET PIPE AUTOMATIC SPRINKLER SYSTEM SHALL BE INSTALLED THROUGHOUT EACH DUPLEX TO ENHANCE LIFE SAFETY WHILE MINIMIZING IMPACTS TO HISTORIC FABRIC.	YES	IRC §309.2; IRC §P2904; NFPA 13D (2025)
WINDOWS	NO CHANGES TO EXISTING WINDOWS. EXISTING EGRESS WINDOWS REMAIN COMPLIANT FOR SLEEPING ROOMS.	NR	IRC §R319.7
INTERNATIONAL WILDLAND–URBAN INTERFACE CODE (IWUIC)	PROJECT SITE IS IN THE CITY OF HOT SPRINGS AND WAS EVALUATED FOR IWUIC APPLICABILITY. NO EXTERIOR CONSTRUCTION, IGNITION-RESISTANT MATERIAL CHANGES, OR SITE MODIFICATIONS PROPOSED. COMPLIANCE MAINTAINED WITH EXISTING CONDITIONS.	NR	IWUIC §101.2; §503

'NR' INDICATES THAT NO ADDITIONAL CODE MANDATED COMPLIANCE UPGRADES ARE REQUIRED BASED ON THE PROJECT DESCRIPTION, WHICH IS LIMITED TO THE DESIGN AND INSTALLATION OF A FIRE ALARM SYSTEM AND A WET PIPE AUTOMATIC SPRINKLER SYSTEM, AND ALSO BASED ON THE EXISTING OCCUPANCY CLASSIFICATION AND LIMITATIONS.

ACCESSIBILITY EVALUATION

4.0 DESCRIPTION

THE FOLLOWING CODE REVIEW NARRATIVE IS PROVIDED TO SERVE AS A BASIS OF UNDERSTANDING FOR THE ACCESSIBILITY.

PER DIRECTOR'S ORDER #16A (03/03/2025) , AS REFERENCED IN #36, RENOVATION OF EXISTING GOVERNMENT FURNISHED HOUSING (GFH) MUST MAKE A REASONABLE ACCOMMODATIONS. AT A MINIMUM, FOR SINGLE FAMILY AND MULTIPLEX UNITS IN A "HOUSING AREA", AT LEAST 5%, BUT NOT LESS THAN ONE UNIT, MUST PROVIDE MOBILITY FEATURES FOR MOBILITY IMPAIRED PERSONS. IN ADDITION, AT LEAST 2%, BUT NOT LESS THAN ONE UNIT, MUST PROVIDE COMMUNICATION FEATURES FOR PERSONS WITH HEARING OR VISION IMPAIRMENTS.

EXISTING ELEMENTS OR SPACES BEING ALTERED, INCLUDING PRIMARY FUNCTION AREAS, THAT DO NOT AFFECT THE USABILITY OF OR ACCESS TO AN AREA OR ELEMENT, AND ARE WITHIN A RESIDENTIAL DWELLING UNIT NEED NOT COMPLY UNLESS REQUIRED TO BE ACCESSIBLE PURSUANT TO SECTION 504 OF THE REHABILITATION ACT OF 1973 FOR RECEIVING FEDERAL FUNDING.

WHERE FEDERAL FUNDING IS PROVIDED FOR THE ALTERATION OF DWELLING UNITS IN DESIGNATED HOUSING AREA, THE MINIMUM % OF UNITS AS REQUIRED BY THE DIRECTOR'S ORDER MUST BE PROVIDED WITH REASONABLE ACCOMMODATIONS FOR PERSONS WITH HEARING , MOBILITY, OR VISION IMPAIRMENTS TO THE EXTENT FEASIBLE.

4.1 IRC/IBC/IEBC ACCESSIBILITY REQUIREMENTS

LOCATION AND FUNCTION	REQUIRED	PROVIDED	CODE REFERENCE
> 4 DWELLING UNITS; IBC CH. 11	NO	SEE 4.2 FOR ADDITIONAL REQUIREMENTS UNDER THE ABA	IRC R322.1
ACCESSIBLE ROUTE: NOT REQUIRED FOR ALTERATION THAT DO NOT AFFECT ACCESSIBILITY TO, OR THE USE OF PRIMARY FUNCTION AREAS, AND ARE LIMITED TO INSTALLATION OF FIRE PROTECTION SYSTEMS.	NO	SEE 4.2 FOR ADDITIONAL REQUIREMENTS UNDER THE ABA	IEBC 306.7.1; EXCEPTION 3

4.2 ACCESSIBLE DWELLING UNITS REQUIREMENTS

LOCATION AND FUNCTION	REQUIRED	PROVIDED	CODE REFERENCE
SITES, BUILDINGS, FACILITIES AND ELEMENTS ARE EXEMPT FROM THE REQUIREMENTS OF THE ABA TO THE EXTENT SPECIFIED IN F203. IN FACILITIES WITH RESIDENTIAL DWELLING UNITS, COMMON USE AREAS THAT DO NOT SERVE RESIDENTIAL DWELLING UNITS REQUIRED TO PROVIDE MOBILITY FEATURES SHALL NOT BE REQUIRED TO COMPLY WITH THE REQUIREMENTS OR TO BE ON AN ACCESSIBLE ROUTE.	SEE DIRECTOR'S ORDERS FOR REASONABLE ACCOMMODATION	NR	ABA §F203.9
ACCESSIBLE ROUTES	NO	NO	ABA 809.2.1
KITCHEN	NO	NO	ABA 809.2.3
TOILET & BATHING FACILITIES	NO	NO	ABA 809.2.4
COMMUNICATION FEATURES	YES	YES	ABA 809.3
AUDIBLE/VISIBLE NOTIFICATION	YES	YES	ABA 809.3.1
SMOKE ALARMS	YES	YES	ABA 809.3.2
CARBON MONOXIDE ALARMS	YES	YES	ABA 809.3.2
DOOR BELL	NO	NO	ABA 809.3.2
VISITOR NOTIFICATION	NO	NO	ABA 809.3.2.1
VISITOR IDENTIFICATION	NO	NO	ABA 809.3.2.2
CLOSED-CIRCUIT COMMUNICATIONS	NO	NO	ABA 809.3.3

'NR' INDICATES THAT NO ADDITIONAL ABA ACCESSIBILITY COMPLIANCE UPGRADES ARE REQUIRED BASED ON THE PROJECT DESCRIPTION, WHICH IS LIMITED TO THE DESIGN AND INSTALLATION OF A FIRE ALARM SYSTEM AND A WET PIPE AUTOMATIC SPRINKLER SYSTEM. THE NEW FIRE ALARM AND SPRINKLER SYSTEMS WILL BE INSTALLED IN COMPLIANCE WITH ALL APPLICABLE NPS REQUIREMENTS, NFPA STANDARDS, AND ACCESSIBILITY STANDARDS, AS APPLICABLE TO THIS SCOPE OF WORK. SHOULD NPS ELECT TO PURSUE ACCESSIBILITY UPGRADES TO ONE OF THE DWELLING UNITS, SUCH WORK WOULD BE COMPLETED UNDER A SEPARATE, FUTURE PROJECT.

STATE OF ARKANSAS PROFESSIONAL ENGINEER No. 17048 MICHAEL JONATHAN SHUMPERT
3/30/2026

DESIGNED: R. RICHTER	SUB SHEET NO.	TITLE OF SHEET	DRAWING NO. 128 80081
DRAWN: T. FREEMAN	G4	CODE ANALYSIS	PMIS/PKG NO. 245945
TECH. REVIEW: M. SHUMPERT		HOT SPRINGS NATIONAL PARK HOT SPRINGS, ARKANSAS	SHEET 4 OF 19
DATE: 03/30/2026			

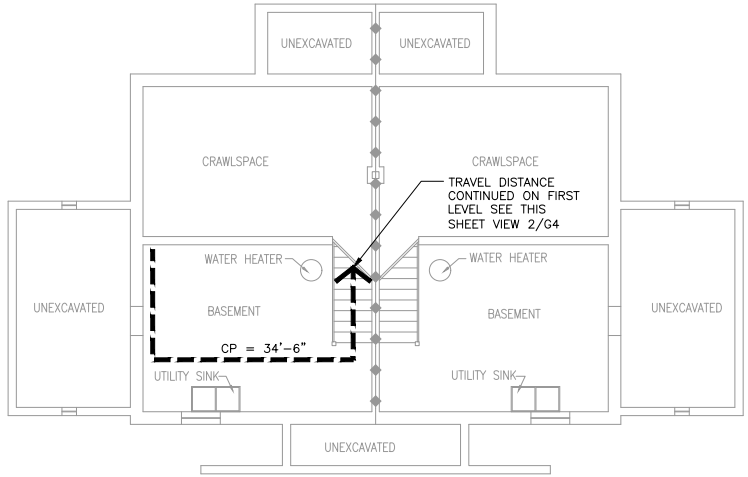

1 G4 CODE SUMMARY BASEMENT LEVEL PLAN

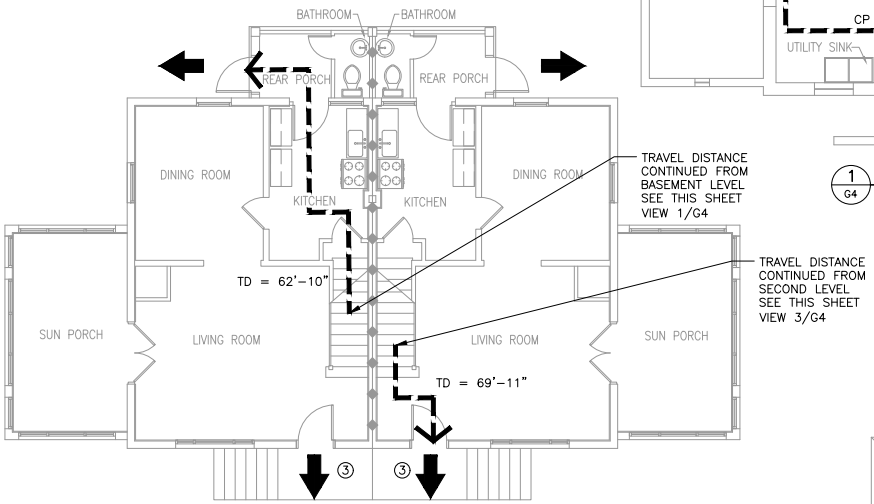

2 G4 CODE SUMMARY FIRST LEVEL PLAN

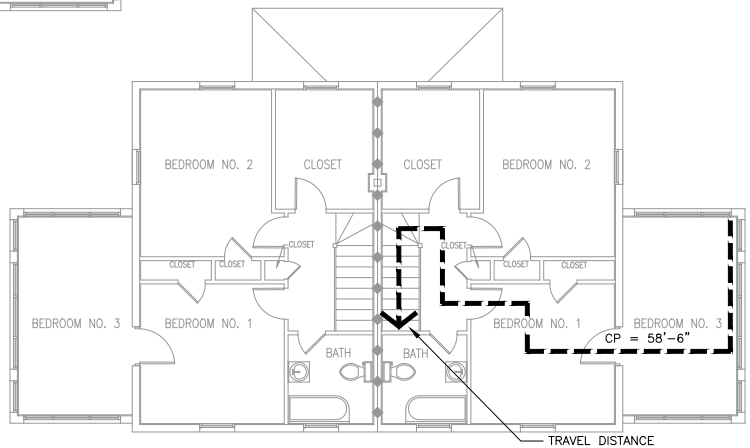

3 G4 CODE SUMMARY SECOND LEVEL PLAN

LEGEND

XX'-XX"	TRAVEL DISTANCE – TD
XX'-XX"	COMMON PATH – CP
	TRAVEL DISTANCE PATH*
X	OCCUPANTS AT EXIT*
	DWELLING UNIT EXIT
	1-HOUR FIRE BARRIER

NOTE:
WALL RATING MAY BE REDUCED TO 1/2 HOUR FOLLOWING SPRINKLER INSTALLATION, PER IRC §302.3.2.

OCCUPANT LOAD
3 PEOPLE (PER DWELLING UNIT) FOR A TOTAL OF 6 PEOPLE

BUILDING SQUARE FOOTAGE	
BASEMENT LEVEL	575 SQ FT. PER BLDG.
FIRST FLOOR	1,670 SQ FT PER BLDG.
SECOND FLOOR	1,525 SQ FT PER BLDG.
TOTAL SQ FT	3,770 SQ FT PER BLDG.

NOTE: QTRS 70A/B AND QTRS 71A/B ARE SEPARATE BUILDINGS; HOWEVER, THEY ARE IDENTICAL IN DESIGN. THIS LIFE SAFETY DRAWING IS REPRESENTATIVE OF BOTH BUILDINGS.

STATE OF ARKANSAS PROFESSIONAL ENGINEER No. 17048 MICHAEL JONATHAN SHUMPERT
3/30/2026

DESIGNED: R. RICHTER CADD: T. FREEMAN TECH. REVIEW: M. SHUMPERT DATE: 03/30/2026	SUB SHEET NO. G5	TITLE OF SHEET LIFE SAFETY PLANS HOT SPRINGS NATIONAL PARK HOT SPRINGS, ARKANSAS	DRAWING NO. 128 80081 PMIS/PKG NO. 245945 SHEET 5 OF 19

SPRINKLER HEAD LEGEND			
SYMBOL	QUANTITY	ORIENTATION	TYPE
▶	0	HORIZONTAL SIDEWALL	RESIDENTIAL
◇	4	UPRIGHT	RESIDENTIAL

NFPA 13D SPRINKLER SYSTEM SCHEDULE						
AREA	HAZARD CLASS	MIN. K-FACTOR	MIN. DENSITY (GPM/SQ.FT.)	MIN. SPK. SYS. HYDR. DESIGN AREA	HOSE (GPM)	DURATION (MIN.)
ALL AREAS NOT HATCHED	RESIDENTIAL	4.0	0.05	2 SPRINKLERS	0	30

FIRE PROTECTION LEGEND

- WET SPRINKLER SYSTEM RISER
- RESIDENTIAL UPRIGHT SPRINKLER
- RESIDENTIAL HORIZONTAL SIDEWALL SPRINKLER
- CROSS
- ELBOW
- PIPE UP/DOWN
- TEE
- NEW SPRINKLER SYSTEM PIPE
- NEW DOMESTIC WATER PIPE
- EXISTING DOMESTIC WATER LINE

GENERAL NOTES

1. REFER TO NOTES ON SHEETS G2.
2. ALL PIPING AFTER THE RESIDENTIAL RISER MANIFOLD SHALL BE CPVC.
3. INSTALL CODE COMPLIANT NFPA 13D FIRE SUPPRESSION SYSTEM THROUGHOUT ALL AREAS OF BUILDING; INCLUDING BUT NOT LIMITED TO:
   A. BASEMENT
   B. FIRST FLOOR
   C. SECOND FLOOR
3. ALL HORIZONTAL SIDEWALLS AND ESCUTCHEONS SHALL BE WHITE UNLESS NOTED OTHERWISE.
4. PROVIDE HEAD GUARDS ON ALL EXPOSED SPRINKLER HEADS IN BASEMENT.
5. TO MAINTAIN THE HISTORICAL FABRIC, NEW SPRINKLER SYSTEM PIPING SHOULD BE INSTALLED IN THE LEAST INTRUSIVE MANNER POSSIBLE. THE CONTRACTOR SHOULD REVIEW PROPOSED PIPE ROUTING, METHODS OF SUPPORTING PIPING, ETC. WITH THE NPS COR PRIOR TO SYSTEM DESIGN.

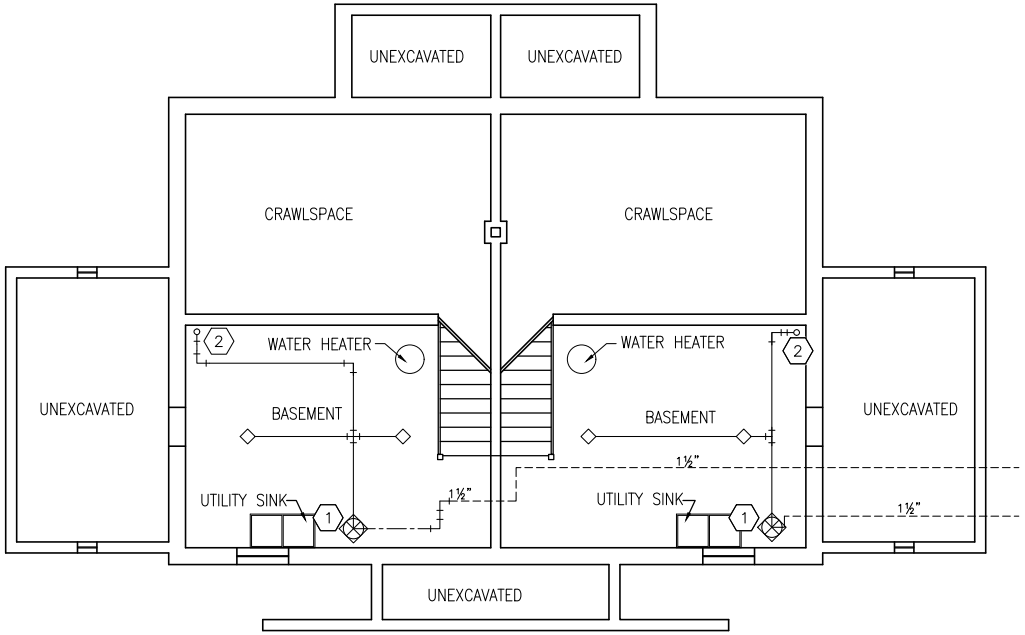

1 FP1.1 BASEMENT FIRE PROTECTION PLAN
1/4" = 1'-0"

KEY NOTES:

1. WET RISER, SEE DETAIL 1 ON SHEET FP1.4.
2. UP TO FIRST FLOOR IN HVAC CHASE.

4 0 4 8
SCALE OF FEET

NORTH

STATE OF ARKANSAS PROFESSIONAL ENGINEER No. 17048 MICHAEL JONATHAN SHUMPERT
3/30/2026

DESIGNED:	SUB SHEET NO.	TITLE OF SHEET	DRAWING NO.
J. WALLACE	FP1.1	BLDG 70 FIRE PROTECTION BASEMENT FLOOR PLAN	128 80081
CADD J. WALLACE		HOT SPRINGS NATIONAL PARK HOT SPRINGS, ARKANSAS	PMIS/PKG NO. 245945
TECH. REVIEW: M. SHUMPERT			SHEET 6 OF 19
DATE: 03/30/2026			

SPRINKLER HEAD LEGEND			
SYMBOL	QUANTITY	ORIENTATION	TYPE
▶	10	HORIZONTAL SIDEWALL	RESIDENTIAL
◇	0	UPRIGHT	RESIDENTIAL

NFPA 13D SPRINKLER SYSTEM SCHEDULE						
AREA	HAZARD CLASS	MIN. K-FACTOR	MIN. DENSITY (GPM/SQ.FT.)	MIN. SPK. SYS. HYDR. DESIGN AREA	HOSE (GPM)	DURATION (MIN.)
ALL AREAS NOT HATCHED	RESIDENTIAL	4.0	0.05	2 SPRINKLERS	0	30

FIRE PROTECTION LEGEND

- WET SPRINKLER SYSTEM RISER
- RESIDENTIAL UPRIGHT SPRINKLER
- RESIDENTIAL HORIZONTAL SIDEWALL SPRINKLER
- CROSS
- ELBOW
- PIPE UP/DOWN
- TEE
- NEW SPRINKLER SYSTEM PIPE
- NEW DOMESTIC WATER PIPE
- EXISTING DOMESTIC WATER LINE

GENERAL NOTES

1. REFER TO NOTES ON SHEETS G2.
2. ALL PIPING AFTER THE RESIDENTIAL RISER MANIFOLD SHALL BE CPVC.
3. INSTALL CODE COMPLIANT NFPA 13D FIRE SUPPRESSION SYSTEM THROUGHOUT ALL AREAS OF BUILDING; INCLUDING BUT NOT LIMITED TO:
   A. BASEMENT
   B. FIRST FLOOR
   C. SECOND FLOOR
3. ALL HORIZONTAL SIDEWALLS AND ESCUTCHEONS SHALL BE WHITE UNLESS NOTED OTHERWISE.
4. PROVIDE HEAD GUARDS ON ALL EXPOSED SPRINKLER HEADS IN BASEMENT.
5. TO MAINTAIN THE HISTORICAL FABRIC, NEW SPRINKLER SYSTEM PIPING SHOULD BE INSTALLED IN THE LEAST INTRUSIVE MANNER POSSIBLE. THE CONTRACTOR SHOULD REVIEW PROPOSED PIPE ROUTING, METHODS OF SUPPORTING PIPING, ETC. WITH THE NPS COR PRIOR TO SYSTEM DESIGN.

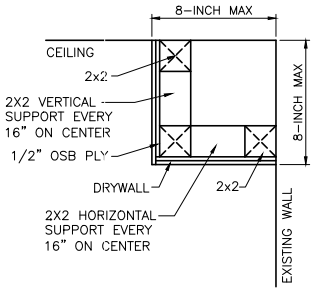

2 FP1.2 TYPICAL SOFFIT CONSTRUCTION
3" – 1'-0"

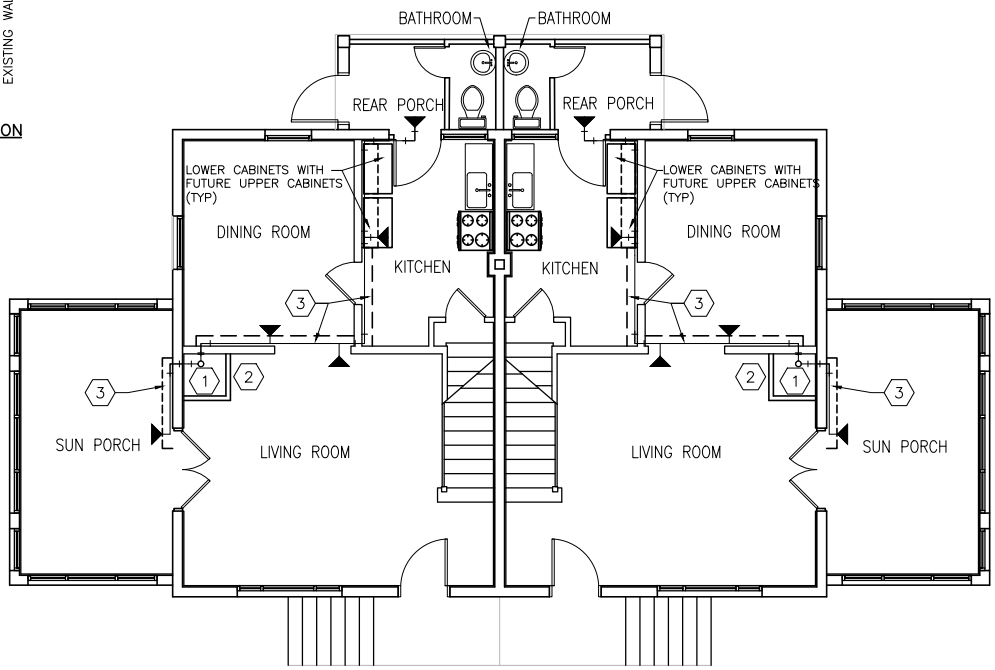

1 FP1.2 FIRST FLOOR FIRE PROTECTION PLAN
1/4" – 1'-0"

KEY NOTES:

1. DOWN TO BASEMENT & UP TO SECOND FLOOR IN HVAC CHASE.
2. ADD 16"x16" NON-FIRE RATED FLUSH STEEL ACCESS PANEL TO HVAC CHASE TO FACILITATE SPRINKLER RISER INSTALLATION. REFERENCE DIVISION 21 SPECIFICATIONS FOR ACCESS HATCH REQUIREMENTS.
3. PROVIDE SOFFIT TO CONCEAL EXPOSED FIRE SPRINKLER PIPING. SEE DETAIL 2 THIS SHEET. REFERENCE DIVISION 21 SPECIFICATIONS FOR SOFFIT REQUIREMENTS. A MODULAR PIPING COVER SYSTEM IS ALLOWED IN LIEU OF A WOOD FRAMED SOFFIT. SEE DIVISION 21 SPECIFICATIONS FOR MODULAR PIPING COVER SYSTEM REQUIREMENTS.

4 0 4 8
SCALE OF FEET

NORTH

STATE OF ARKANSAS PROFESSIONAL ENGINEER No. 17048 MICHAEL JONATHAN SHUMPERT
3/30/2026

DESIGNED:	SUB SHEET NO.	TITLE OF SHEET	DRAWING NO.
J. WALLACE	FP1.2	BLDG 70 FIRE PROTECTION FIRST FLOOR PLAN	128 80081
CADD: J. WALLACE			PMIS/PKG NO. 245945
TECH. REVIEW: M. SHUMPERT		HOT SPRINGS NATIONAL PARK HOT SPRINGS, ARKANSAS	SHEET 7 OF 19
DATE: 03/30/2026			

SPRINKLER HEAD LEGEND			
SYMBOL	QUANTITY	ORIENTATION	TYPE
▶	12	HORIZONTAL SIDEWALL	RESIDENTIAL
◇	0	UPRIGHT	RESIDENTIAL

NFPA 13D SPRINKLER SYSTEM SCHEDULE						
AREA	HAZARD CLASS	MIN. K-FACTOR	MIN. DENSITY (GPM/SQ.FT.)	MIN. SPK. SYS. HYDR. DESIGN AREA	HOSE (GPM)	DURATION (MIN.)
ALL AREAS NOT HATCHED	RESIDENTIAL	4.0	0.05	2 SPRINKLERS	0	30

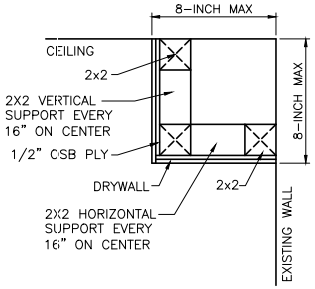

2 FP1.3 TYPICAL SOFFIT CONSTRUCTION
3" = 1'-0"

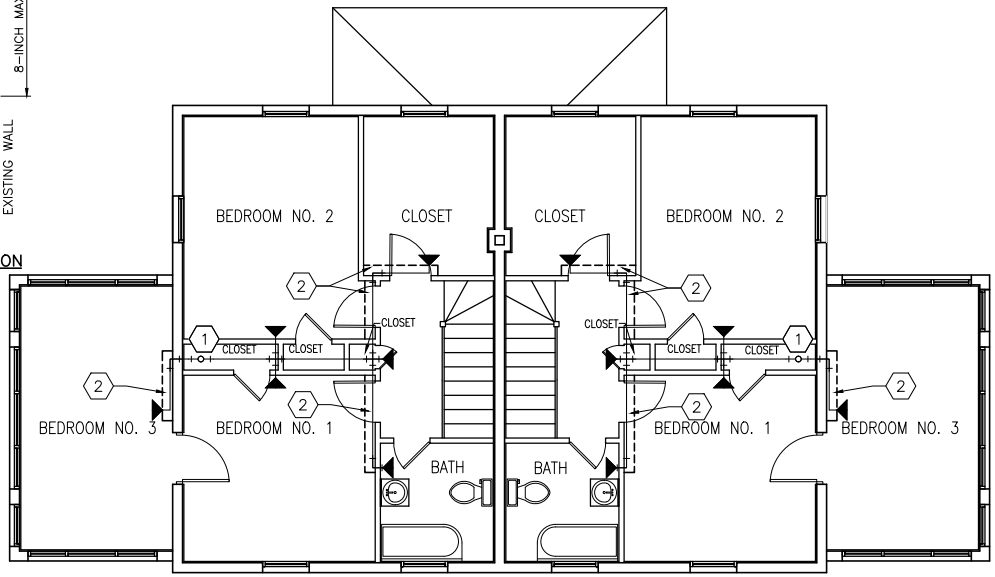

1 FP1.3 SECOND FLOOR FIRE PROTECTION PLAN
1/4" = 1'-0"

FIRE PROTECTION LEGEND

- WET SPRINKLER SYSTEM RISER
- RESIDENTIAL UPRIGHT SPRINKLER
- RESIDENTIAL HORIZONTAL SIDEWALL SPRINKLER
- CROSS
- ELBOW
- PIPE UP/DOWN
- TEE
- NEW SPRINKLER SYSTEM PIPE
- NEW DOMESTIC WATER PIPE
- EXISTING DOMESTIC WATER LINE

GENERAL NOTES

1. REFER TO NOTES ON SHEETS G2.
2. ALL PIPING AFTER THE RESIDENTIAL RISER MANIFOLD SHALL BE CPVC.
3. INSTALL CODE COMPLIANT NFPA 13D FIRE SUPPRESSION SYSTEM THROUGHOUT ALL AREAS OF BUILDING; INCLUDING BUT NOT LIMITED TO:
   A. BASEMENT
   B. FIRST FLOOR
   C. SECOND FLOOR
3. ALL HORIZONTAL SIDEWALLS AND ESCUTCHEONS SHALL BE WHITE UNLESS NOTED OTHERWISE.
4. PROVIDE HEAD GUARDS ON ALL EXPOSED SPRINKLER HEADS IN BASEMENT.
5. TO MAINTAIN THE HISTORICAL FABRIC, NEW SPRINKLER SYSTEM PIPING SHOULD BE INSTALLED IN THE LEAST INTRUSIVE MANNER POSSIBLE. THE CONTRACTOR SHOULD REVIEW PROPOSED PIPE ROUTING, METHODS OF SUPPORTING PIPING, ETC. WITH THE NPS COR PRIOR TO SYSTEM DESIGN.

KEY NOTES:

1. DOWN TO FIRE FLOOR.
2. PROVIDE SOFFIT TO CONCEAL EXPOSED FIRE SPRINKLER PIPING. SEE DETAIL 2 THIS SHEET. REFERENCE DIVISION 21 SPECIFICATIONS FOR SOFFIT REQUIREMENTS. A MODULAR PIPING COVER SYSTEM IS ALLOWED IN LIEU OF A WOOD FRAMED SOFFIT. SEE DIVISION 21 SPECIFICATIONS FOR MODULAR PIPING COVER SYSTEM REQUIREMENTS.

4 0 4 8
SCALE OF FEET

NORTH

STATE OF ARKANSAS PROFESSIONAL ENGINEER No. 17048 MICHAEL JONATHAN SHUMPERT
3/30/2026

DESIGNED: J. WALLACE	SUB SHEET NO. FP1.3	TITLE OF SHEET BLDG 70 FIRE PROTECTION SECOND FLOOR PLAN HOT SPRINGS NATIONAL PARK HOT SPRINGS, ARKASAS	DRAWING NO. 128 80081
CADD J. WALLACE			PMIS/PKG NO. 245945
TECH. REVIEW: M. SHUMPERT			SHEET 8 OF 19
DATE: 03/30/2026			

FIRE PROTECTION PIPE TYPE LEGEND

- NEW CPVC SPRINKLER SYSTEM PIPE
- NEW COPPER WATER PIPE
- EXISTING COPPER WATER LINE

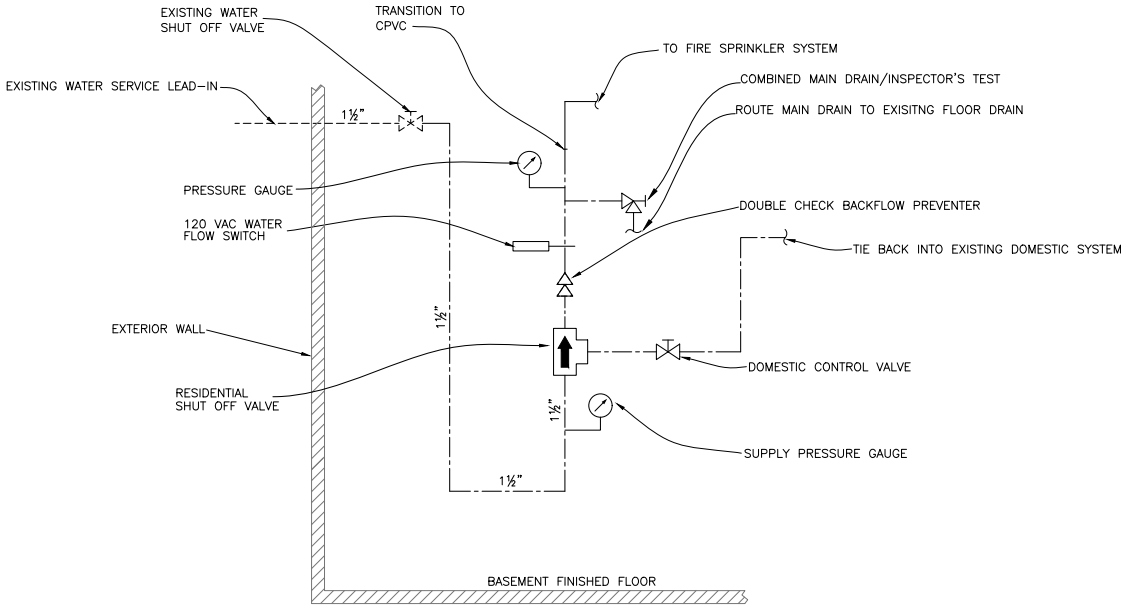

1 FP1.4 FIRE ENTRY DETAIL
NO SCALE

STATE OF ARKANSAS PROFESSIONAL ENGINEER No. 17048 MICHAEL JONATHAN SHUMPERT
3/30/2026

DESIGNED: J. WALLACE	SUB SHEET NO.	TITLE OF SHEET	DRAWING NO.
CADD J. WALLACE	FP1.4	BLDG 70 FIRE PROTECTION DETAILS	128 80081
TECH. REVIEW: M. SHUMPERT		HOT SPRINGS NATIONAL PARK HOT SPRINGS, ARKANSAS	PMIS/PKG NO. 245945
DATE: 03/30/2026			SHEET 9 OF 19

SPRINKLER HEAD LEGEND			
SYMBOL	QUANTITY	ORIENTATION	TYPE
▶	0	HORIZONTAL SIDEWALL	RESIDENTIAL
◇	4	UPRIGHT	RESIDENTIAL

NFPA 13D SPRINKLER SYSTEM SCHEDULE						
AREA	HAZARD CLASS	MIN. K-FACTOR	MIN. DENSITY (GPM/SQ.FT.)	MIN. SPK. SYS. HYDR. DESIGN AREA	HOSE (GPM)	DURATION (MIN.)
ALL AREAS NOT HATCHED	RESIDENTIAL	4.0	0.05	2 SPRINKLERS	0	30

FIRE PROTECTION LEGEND

- WET SPRINKLER SYSTEM RISER
- RESIDENTIAL UPRIGHT SPRINKLER
- RESIDENTIAL HORIZONTAL SIDEWALL SPRINKLER
- CROSS
- ELBOW
- PIPE UP/DOWN
- TEE
- BALL VALVE
- NEW SPRINKLER SYSTEM PIPE
- NEW DOMESTIC WATER PIPE
- EXISTING DOMESTIC WATER LINE

GENERAL NOTES

1. REFER TO NOTES ON SHEETS G2.
2. ALL PIPING AFTER THE RESIDENTIAL RISER MANIFOLD SHALL BE CPVC.
3. INSTALL CODE COMPLIANT NFPA 13D FIRE SUPPRESSION SYSTEM THROUGHOUT ALL AREAS OF BUILDING; INCLUDING BUT NOT LIMITED TO:
   A. BASEMENT
   B. FIRST FLOOR
   C. SECOND FLOOR
3. ALL HORIZONTAL SIDEWALLS AND ESCUTCHEONS SHALL BE WHITE UNLESS NOTED OTHERWISE.
4. PROVIDE HEAD GUARDS ON ALL EXPOSED SPRINKLER HEADS IN BASEMENT.
5. TO MAINTAIN THE HISTORICAL FABRIC, NEW SPRINKLER SYSTEM PIPING SHOULD BE INSTALLED IN THE LEAST INTRUSIVE MANNER POSSIBLE. THE CONTRACTOR SHOULD REVIEW PROPOSED PIPE ROUTING, METHODS OF SUPPORTING PIPING, ETC. WITH THE NPS COR PRIOR TO SYSTEM DESIGN.

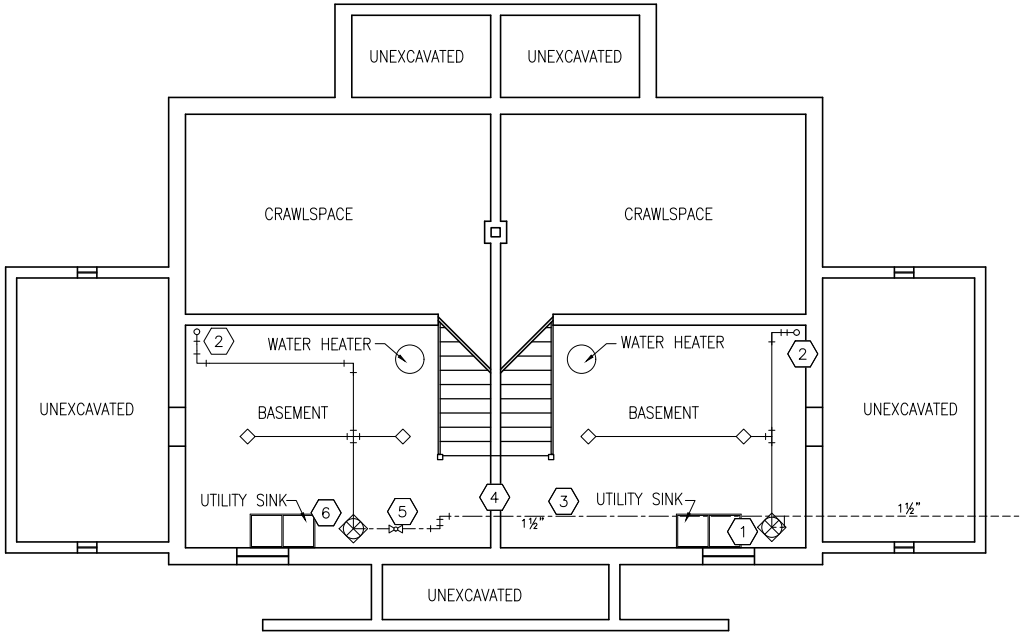

1 FP2.1 BASEMENT FIRE PROTECTION PLAN
1/4" = 1'-0"

KEY NOTES:

1. WET RISER, SEE DETAIL 1 ON SHEET FP2.4.
2. UP TO FIRST FLOOR IN HVAC CHASE.
3. EXTEND 1½-INCH TYPE L COPPER WATER LINE TO UNIT 71A TO SUPPLY SPRINKLER SYSTEM RISER.
4. CORE DRILL THROUGH EXISTING CONCRETE BLOCK WALL TO ROUTE PIPE TO UNIT 71B.
5. PROVIDE NEW 1½-INCH BALL VALVE.
6. WET RISER, SEE DETAIL 2 ON SHEET FP2.4.

4 0 4 8
SCALE OF FEET

NORTH

STATE OF ARKANSAS PROFESSIONAL ENGINEER No. 17048 MICHAEL JONATHAN SHUMPERT
3/30/2026

DESIGNED: J. WALLACE	SUB SHEET NO. FP2.1	TITLE OF SHEET BLDG 71 FIRE PROTECTION BASEMENT FLOOR PLAN HOT SPRINGS NATIONAL PARK HOT SPRINGS, ARKANSAS	DRAWING NO. 128 80081
CADD J. WALLACE			PMIS/PKG NO. 245945
TECH. REVIEW: M. SHUMPERT			SHEET 10 OF 19
DATE: 03/30/2026			

SPRINKLER HEAD LEGEND			
SYMBOL	QUANTITY	ORIENTATION	TYPE
▶	10	HORIZONTAL SIDEWALL	RESIDENTIAL
◇	0	UPRIGHT	RESIDENTIAL

NFPA 13D SPRINKLER SYSTEM SCHEDULE						
AREA	HAZARD CLASS	MIN. K-FACTOR	MIN. DENSITY (GPM/SQ.FT.)	MIN. SPK. SYS. HYDR. DESIGN AREA	HOSE (GPM)	DURATION (MIN.)
ALL AREAS NOT HATCHED	RESIDENTIAL	4.0	0.05	2 SPRINKLERS	0	30

FIRE PROTECTION LEGEND

- WET SPRINKLER SYSTEM RISER
- RESIDENTIAL UPRIGHT SPRINKLER
- RESIDENTIAL HORIZONTAL SIDEWALL SPRINKLER
- CROSS
- ELBOW
- PIPE UP/DOWN
- TEE
- NEW SPRINKLER SYSTEM PIPE
- NEW DOMESTIC WATER PIPE
- EXISTING DOMESTIC WATER LINE

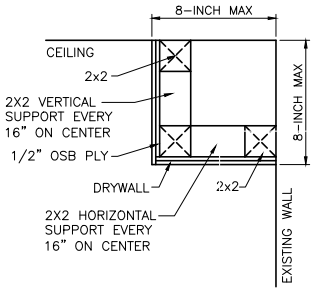

2 FP2.2 TYPICAL SOFFIT CONSTRUCTION
3" – 1'-0"

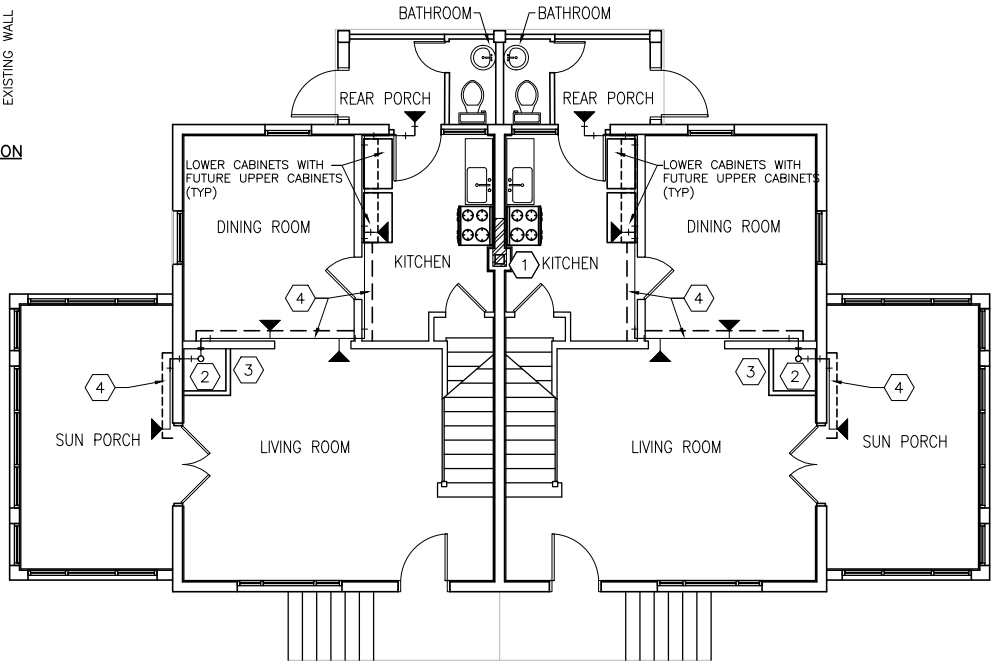

1 FP2.2 FIRST FLOOR FIRE PROTECTION PLAN
1/4" – 1'-0"

GENERAL NOTES

1. REFER TO NOTES ON SHEETS G2.
2. ALL PIPING AFTER THE RESIDENTIAL RISER MANIFOLD SHALL BE CPVC.
3. INSTALL CODE COMPLIANT NFPA 13D FIRE SUPPRESSION SYSTEM THROUGHOUT ALL AREAS OF BUILDING; INCLUDING BUT NOT LIMITED TO:
   A. BASEMENT
   B. FIRST FLOOR
   C. SECOND FLOOR
3. ALL HORIZONTAL SIDEWALLS AND ESCUTCHEONS SHALL BE WHITE UNLESS NOTED OTHERWISE.
4. PROVIDE HEAD GUARDS ON ALL EXPOSED SPRINKLER HEADS IN BASEMENT.
5. TO MAINTAIN THE HISTORICAL FABRIC, NEW SPRINKLER SYSTEM PIPING SHOULD BE INSTALLED IN THE LEAST INTRUSIVE MANNER POSSIBLE. THE CONTRACTOR SHOULD REVIEW PROPOSED PIPE ROUTING, METHODS OF SUPPORTING PIPING, ETC. WITH THE NPS COR PRIOR TO SYSTEM DESIGN.

KEY NOTES:

1. INFILL WALL OPENING (APPROXIMATELY 37"x80") WITH 1-HOUR FIRE RATED CONSTRUCTION. REFER TO DETAILS 3 AND 4 ON FP2.4.
2. DOWN TO BASEMENT & UP TO SECOND FLOOR IN HVAC CHASE.
3. ADD 16"x16" NON-FIRE RATED FLUSH STEEL ACCESS PANEL TO HVAC CHASE TO FACILITATE SPRINKLER RISER INSTALLATION. REFERENCE DIVISION 21 SPECIFICATIONS FOR ACCESS PANEL REQUIREMENTS.
4. PROVIDE SOFFIT TO CONCEAL EXPOSED FIRE SPRINKLER PIPING. SEE DETAIL 2 THIS SHEET. REFERENCE DIVISION 21 SPECIFICATIONS FOR SOFFIT REQUIREMENTS. A MODULAR PIPING COVER SYSTEM IS ALLOWED IN LIEU OF A WOOD FRAMED SOFFIT. SEE DIVISION 21 SPECIFICATIONS FOR MODULAR PIPING COVER SYSTEM REQUIREMENTS.

4 0 4 8
SCALE OF FEET

NORTH

STATE OF ARKANSAS PROFESSIONAL ENGINEER No. 17048 MICHAEL JONATHAN SHUMPERT
3/30/2026

DESIGNED: J. WALLACE	SUB SHEET NO.	TITLE OF SHEET	DRAWING NO.
CADD J. WALLACE	FP2.2	BLDG 71 FIRE PROTECTION FIRST FLOOR PLAN	128 80081
TECH. REVIEW: M. SHUMPERT		HOT SPRINGS NATIONAL PARK HOT SPRINGS, ARKANSAS	PMIS/PKG NO. 245945
DATE: 03/30/2026			SHEET 11 OF 19

SPRINKLER HEAD LEGEND			
SYMBOL	QUANTITY	ORIENTATION	TYPE
▶	12	HORIZONTAL SIDEWALL	RESIDENTIAL
◇	0	UPRIGHT	RESIDENTIAL

NFPA 13D SPRINKLER SYSTEM SCHEDULE						
AREA	HAZARD CLASS	MIN. K-FACTOR	MIN. DENSITY (GPM/SQ.FT.)	MIN. SPK. SYS. HYDR. DESIGN AREA	HOSE (GPM)	DURATION (MIN.)
ALL AREAS NOT HATCHED	RESIDENTIAL	4.0	0.05	2 SPRINKLERS	0	30

FIRE PROTECTION LEGEND

- WET SPRINKLER SYSTEM RISER
- RESIDENTIAL UPRIGHT SPRINKLER
- RESIDENTIAL HORIZONTAL SIDEWALL SPRINKLER
- CROSS
- ELBOW
- PIPE UP/DOWN
- TEE
- NEW SPRINKLER SYSTEM PIPE
- NEW DOMESTIC WATER PIPE
- EXISTING DOMESTIC WATER LINE

GENERAL NOTES

1. REFER TO NOTES ON SHEETS G2.
2. ALL PIPING AFTER THE RESIDENTIAL RISER MANIFOLD SHALL BE CPVC.
3. INSTALL CODE COMPLIANT NFPA 13D FIRE SUPPRESSION SYSTEM THROUGHOUT ALL AREAS OF BUILDING; INCLUDING BUT NOT LIMITED TO:
   A. BASEMENT
   B. FIRST FLOOR
   C. SECOND FLOOR
3. ALL HORIZONTAL SIDEWALLS AND ESCUTCHEONS SHALL BE WHITE UNLESS NOTED OTHERWISE.
4. PROVIDE HEAD GUARDS ON ALL EXPOSED SPRINKLER HEADS IN BASEMENT.
5. TO MAINTAIN THE HISTORICAL FABRIC, NEW SPRINKLER SYSTEM PIPING SHOULD BE INSTALLED IN THE LEAST INTRUSIVE MANNER POSSIBLE. THE CONTRACTOR SHOULD REVIEW PROPOSED PIPE ROUTING, METHODS OF SUPPORTING PIPING, ETC. WITH THE NPS COR PRIOR TO SYSTEM DESIGN.

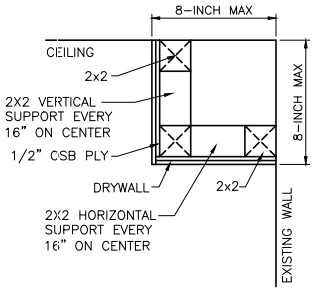

2 FP2.3 TYPICAL SOFFIT CONSTRUCTION
3" – 1'-0"

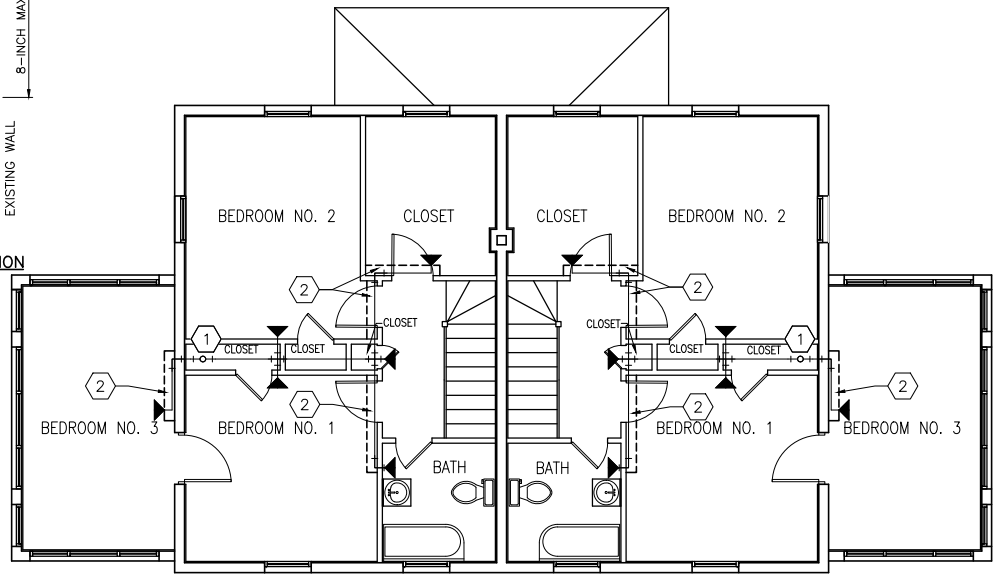

1 FP2.3 SECOND FLOOR FIRE PROTECTION PLAN
1/4" – 1'-0"

KEY NOTES:

1. DOWN TO FIRST FLOOR.
2. PROVIDE SOFFIT TO CONCEAL EXPOSED FIRE SPRINKLER PIPING. SEE DETAIL 2 THIS SHEET. REFERENCE DIVISION 21 SPECIFICATIONS FOR SOFFIT REQUIREMENTS. A MODULAR PIPING COVER SYSTEM IS ALLOWED IN LIEU OF A WOOD FRAMED SOFFIT. SEE DIVISION 21 SPECIFICATIONS FOR MODULAR PIPING COVER SYSTEM REQUIREMENTS.

4 0 4 8
SCALE OF FEET

NORTH

STATE OF ARKANSAS PROFESSIONAL ENGINEER No. 17048 MICHAEL JONATHAN SHUMPERT
3/30/2026

DESIGNED: J. WALLACE	SUB SHEET NO. FP2.3	TITLE OF SHEET BLDG 71 FIRE PROTECTION SECOND FLOOR PLAN HOT SPRINGS NATIONAL PARK HOT SPRINGS, ARKANSAS	DRAWING NO. 128 80081
CADD J. WALLACE			PMIS/PKG NO. 245945
TECH. REVIEW: M. SHUMPERT			SHEET 12 OF 19
DATE: 03/30/2026			

FIRE PROTECTION PIPE TYPE LEGEND

- NEW CPVC SPRINKLER SYSTEM PIPE
- NEW COPPER WATER PIPE
- EXISTING COPPER WATER LINE

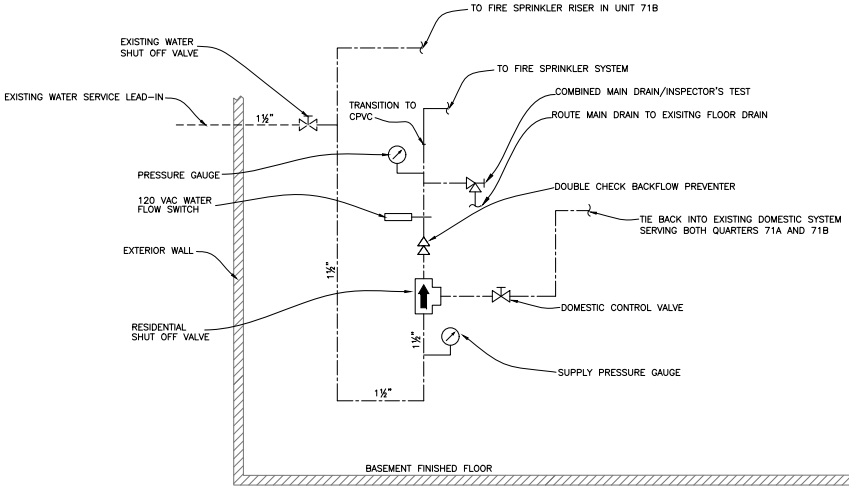

1 FP2.4 FIRE ENTRY DETAIL 71A
NO SCALE

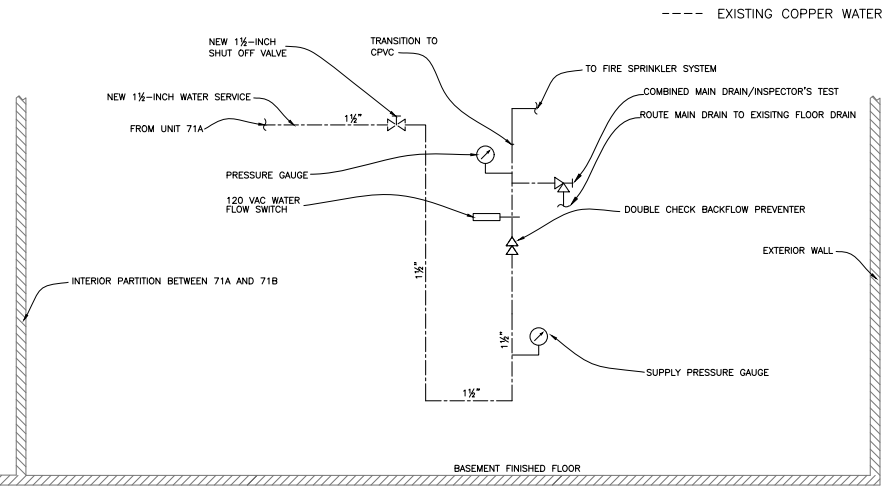

2 FP2.4 FIRE ENTRY DETAIL 71B
NO SCALE

WALL SECTION NOTES	
KEYNOTE	DISCRIPTION
1	EXISTING WALL AT TOP OF OPENING
2	EXISTING FLOOR AT BOTTOM OF OPENING
3	COMPLETELY FILL GAP ABOVE GYPSUM PANELS WITH USG SHEETROCK ACOUSTICAL OR SMOKE-SOUND SEALANT
4	COMPLETLY FILL STUD CAVITY WITH MINERAL WOOL INSULATION
5	2x10 STUD
6	5/8-INCH TYPE X GYPSUM PANELS

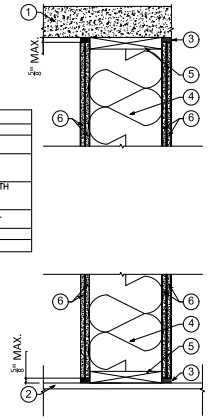

3 FP2.4 WALL SECTION DETAIL
NO SCALE

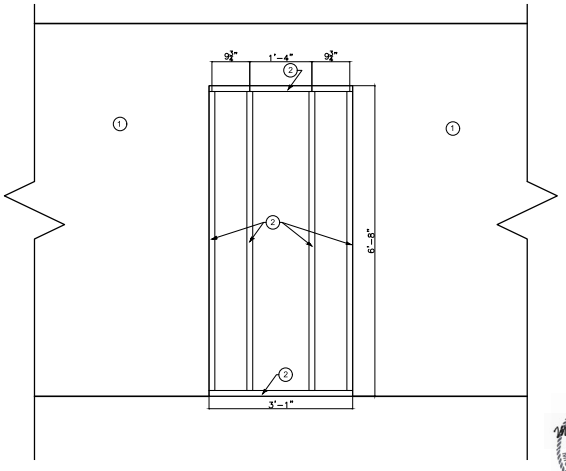

4 FP2.4 WALL ELEVATION DETAIL
NO SCALE

WALL ELEVATION NOTES	
KEYNOTE	DISCRIPTION
1	EXISTING WALL
2	2x10 STUD

STATE OF ARKANSAS
Michael Jonathan Shumpert
PROFESSIONAL ENGINEER
No. 17048
MICHAEL JONATHAN SHUMPERT
3/30/2026

DESIGNED: J. WALLACE	SUB SHEET NO.	TITLE OF SHEET	DRAWING NO. 128 80081
DRAWN: J. WALLACE	FP2.4	BLDG 71 FIRE PROTECTION DETAILS	PMIS/PKG NO. 245945
TECH. REVIEW: M. SHUMPERT		HOT SPRINGS NATIONAL PARK HOT SPRINGS, ARKANSAS	SHEET 13 OF 19
DATE: 03/30/2026			

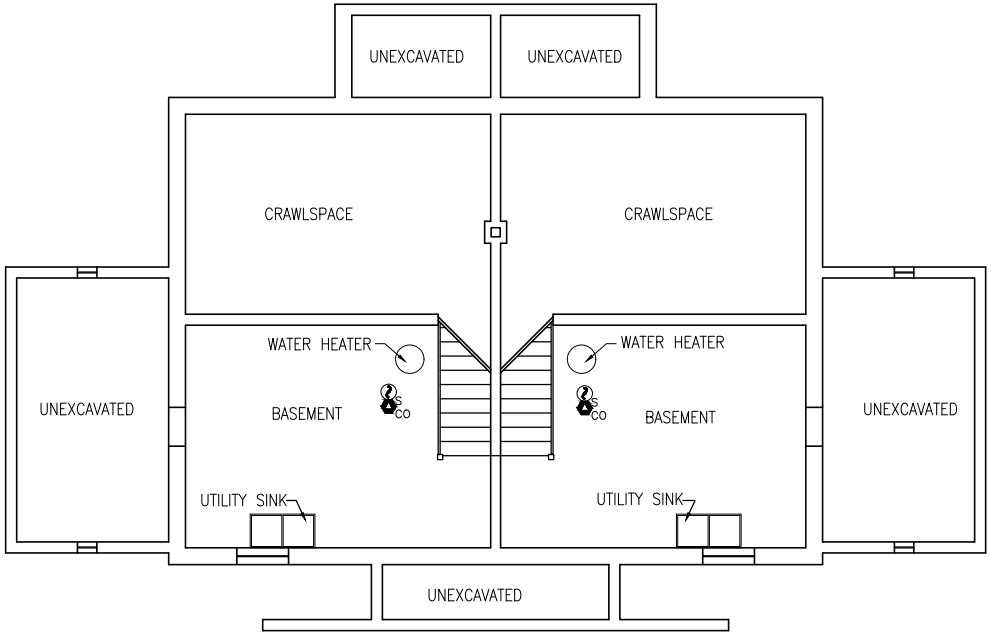

1 FA1.1 BASEMENT FIRE AND CARBON MONOXIDE ALARM PLAN
1/4" = 1'-0"

FIRE ALARM LEGEND

CO — SINGLE STATION CARBON MONOXIDE/SMOKE ALARM WITH INTEGRAL 177CD STROBE AND BACK-UP BATTERY

GENERAL NOTES

1. SMOKE ALARMS AND CARBON MONOXIDE ALARMS SHALL BE INSTALLED IN ACCORDANCE WITH INTERNATIONAL RESIDENTIAL CODE (IRC) (2024 EDITION), SECTIONS R314 AND R315, NATIONAL ELECTRICAL CODE (2023 EDITION) AND NFPA 72 (2025 EDITION).
2. WHERE TWO OR MORE SMOKE ALARMS OR CARBON MONOXIDE ALARMS ARE INSTALLED WITHIN A SINGLE DWELLING UNIT THEY SHALL BE INTERCONNECTED IN SUCH A MANNER THAT THE ACTUATION OF ONE SHALL CAUSE ACTUATION OF ALL ALARMS WITHIN THE DWELLING UNIT.
3. SMOKE ALARMS SHALL BE INSTALLED NOT LESS THAN 3 FT HORIZONTALLY FROM THE DOOR OR OPENING OF A BATHROOM THAT CONTAINS A BATHTUB OR SHOWER UNLESS THIS WOULD PREVENT PLACEMENT OF A SMOKE ALARM REQUIRED BY CODE.
4. SMOKE ALARMS AND CARBON MONOXIDE ALARMS SHALL RECEIVE PRIMARY POWER FROM THE BUILDING WIRING SERVED FROM A COMMERCIAL SOURCE AND, WHERE PRIMARY POWER IS INTERRUPTED, SHALL RECEIVE POWER FROM A BATTERY. WIRING SHALL BE PERMANENT AND WITHOUT A DISCONNECTING SWITCH OTHER THAN THOSE REQUIRED FOR OVERCURRENT PROTECTION.
5. SMOKE ALARMS SHALL BE UL-LISTED IN ACCORDANCE WITH UL 217. CARBON MONOXIDE ALARMS SHALL BE UL LISTED IN ACCORDANCE WITH UL 2034. COMBINATION SMOKE AND CARBON MONOXIDE ALARMS SHALL BE UL LISTED IN ACCORDANCE WITH UL 217 AND UL 2034.

4 0 4 8
SCALE OF FEET

NORTH

STATE OF ARKANSAS PROFESSIONAL ENGINEER No. 17048 MICHAEL JONATHAN SHUMPERT
3/30/2026

DESIGNED: R. RICHTER	SUB SHEET NO. FA1.1	TITLE OF SHEET BLDG 70 FIRE AND CO ALARM BASEMENT FLOOR PLAN HOT SPRINGS NATIONAL PARK HOT SPRINGS, ARKANSAS	DRAWING NO. 128 80081
DDD T. FREEMAN			PMIS/PKG NO. 245945
TECH. REVIEW: M. SHUMPERT			SHEET 14 OF 19
DATE: 03/30/2026			

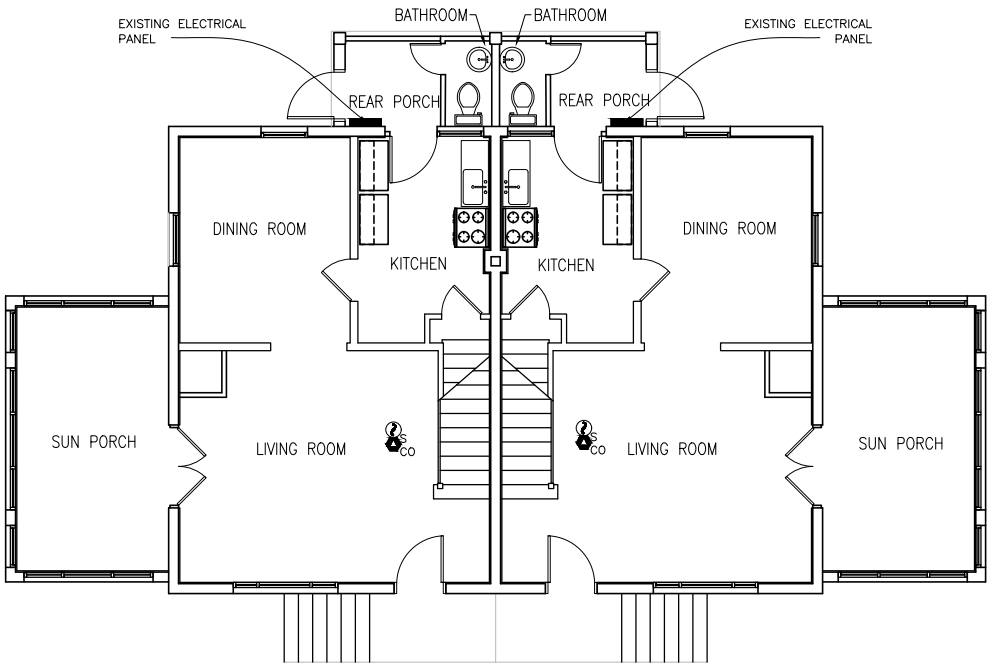

1 FA1.2 FIRST FLOOR FIRE AND CARBON MONOXIDE ALARM PLAN
1/4" = 1'-0"

FIRE ALARM LEGEND

S CO — SINGLE STATION CARBON MONOXIDE/SMOKE ALARM WITH INTEGRAL 177CD STROBE AND BACK-UP BATTERY

GENERAL NOTES

1. SMOKE ALARMS AND CARBON MONOXIDE ALARMS SHALL BE INSTALLED IN ACCORDANCE WITH INTERNATIONAL RESIDENTIAL CODE (IRC) (2024 EDITION), SECTIONS R314 AND R315, NATIONAL ELECTRICAL CODE (2023 EDITION) AND NFPA 72 (2025 EDITION).
2. WHERE TWO OR MORE SMOKE ALARMS OR CARBON MONOXIDE ALARMS ARE INSTALLED WITHIN A SINGLE DWELLING UNIT THEY SHALL BE INTERCONNECTED IN SUCH A MANNER THAT THE ACTUATION OF ONE SHALL CAUSE ACTUATION OF ALL ALARMS WITHIN THE DWELLING UNIT.
3. SMOKE ALARMS SHALL BE INSTALLED NOT LESS THAN 3 FT HORIZONTALLY FROM THE DOOR OR OPENING OF A BATHROOM THAT CONTAINS A BATHTUB OR SHOWER UNLESS THIS WOULD PREVENT PLACEMENT OF A SMOKE ALARM REQUIRED BY CODE.
4. SMOKE ALARMS AND CARBON MONOXIDE ALARMS SHALL RECEIVE PRIMARY POWER FROM THE BUILDING WIRING SERVED FROM A COMMERCIAL SOURCE AND, WHERE PRIMARY POWER IS INTERRUPTED, SHALL RECEIVE POWER FROM A BATTERY. WIRING SHALL BE PERMANENT AND WITHOUT A DISCONNECTING SWITCH OTHER THAN THOSE REQUIRED FOR OVERCURRENT PROTECTION.
5. SMOKE ALARMS SHALL BE UL-LISTED IN ACCORDANCE WITH UL 217. CARBON MONOXIDE ALARMS SHALL BE UL LISTED IN ACCORDANCE WITH UL 2034. COMBINATION SMOKE AND CARBON MONOXIDE ALARMS SHALL BE UL LISTED IN ACCORDANCE WITH UL 217 AND UL 2034.

4 0 4 8
SCALE OF FEET

NORTH

STATE OF ARKANSAS PROFESSIONAL ENGINEER No. 17048 MICHAEL JONATHAN SHUMPERT
3/30/2026

DESIGNED: R. RICHTER CADD: T. FREEMAN TECH. REVIEW: M. SHUMPERT DATE: 03/30/2026	SUB SHEET NO. FA1.2	TITLE OF SHEET BLDG 70 FIRE AND CO ALARM FIRST FLOOR PLAN HOT SPRINGS NATIONAL PARK HOT SPRINGS, ARKANSAS	DRAWING NO. 128 80081 PMIS/PKG NO. 245945 SHEET 15 OF 19

FIRE ALARM LEGEND

S — SINGLE STATION SMOKE ALARM WITH INTEGRAL 177CD STROBE AND BACK-UP BATTERY

S CO — SINGLE STATION CARBON MONOXIDE/SMOKE ALARM WITH INTEGRAL 177CD STROBE AND BACK-UP BATTERY

GENERAL NOTES

1. SMOKE ALARMS AND CARBON MONOXIDE ALARMS SHALL BE INSTALLED IN ACCORDANCE WITH INTERNATIONAL RESIDENTIAL CODE (IRC) (2024 EDITION), SECTIONS R314 AND R315, NATIONAL ELECTRICAL CODE (2023 EDITION) AND NFPA 72 (2025 EDITION).
2. WHERE TWO OR MORE SMOKE ALARMS OR CARBON MONOXIDE ALARMS ARE INSTALLED WITHIN A SINGLE DWELLING UNIT THEY SHALL BE INTERCONNECTED IN SUCH A MANNER THAT THE ACTUATION OF ONE SHALL CAUSE ACTUATION OF ALL ALARMS WITHIN THE DWELLING UNIT.
3. SMOKE ALARMS SHALL BE INSTALLED NOT LESS THAN 3 FT HORIZONTALLY FROM THE DOOR OR OPENING OF A BATHROOM THAT CONTAINS A BATHTUB OR SHOWER UNLESS THIS WOULD PREVENT PLACEMENT OF A SMOKE ALARM REQUIRED BY CODE.
4. SMOKE ALARMS AND CARBON MONOXIDE ALARMS SHALL RECEIVE PRIMARY POWER FROM THE BUILDING WIRING SERVED FROM A COMMERCIAL SOURCE AND, WHERE PRIMARY POWER IS INTERRUPTED, SHALL RECEIVE POWER FROM A BATTERY. WIRING SHALL BE PERMANENT AND WITHOUT A DISCONNECTING SWITCH OTHER THAN THOSE REQUIRED FOR OVERCURRENT PROTECTION.
5. SMOKE ALARMS SHALL BE UL-LISTED IN ACCORDANCE WITH UL 217. CARBON MONOXIDE ALARMS SHALL BE UL LISTED IN ACCORDANCE WITH UL 2034. COMBINATION SMOKE AND CARBON MONOXIDE ALARMS SHALL BE UL LISTED IN ACCORDANCE WITH UL 217 AND UL 2034.

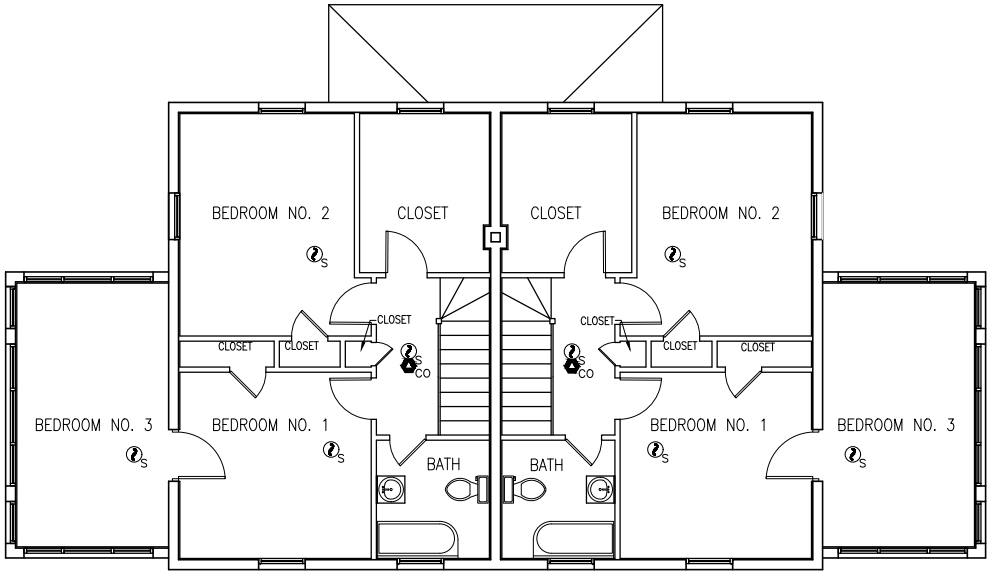

1 FA1.3 SECOND FLOOR FIRE AND CARBON MONOXIDE ALARM PLAN
1/4" = 1'-0"

4 0 4 8
SCALE OF FEET

NORTH

STATE OF ARKANSAS PROFESSIONAL ENGINEER No. 17048 MICHAEL JONATHAN SHUMPERT
3/30/2026

DESIGNED: R. RICHTER CADD T. FREEMAN TECH. REVIEW: M. SHUMPERT DATE: 03/30/2026	SUB SHEET NO. FA1.3	TITLE OF SHEET BLDG 70 FIRE AND CO ALARM SECOND FLOOR PLAN HOT SPRINGS NATIONAL PARK HOT SPRINGS, ARKANSAS	DRAWING NO. 128 80081 PMIS/PKG NO. 245945 SHEET 16 OF 19

FIRE ALARM LEGEND

SCO — SINGLE STATION CARBON MONOXIDE/SMOKE ALARM WITH INTEGRAL 177CD STROBE AND BACK-UP BATTERY

GENERAL NOTES

1. SMOKE ALARMS AND CARBON MONOXIDE ALARMS SHALL BE INSTALLED IN ACCORDANCE WITH INTERNATIONAL RESIDENTIAL CODE (IRC) (2024 EDITION), SECTIONS R314 AND R315, NATIONAL ELECTRICAL CODE (2023 EDITION) AND NFPA 72 (2025 EDITION).
2. WHERE TWO OR MORE SMOKE ALARMS OR CARBON MONOXIDE ALARMS ARE INSTALLED WITHIN A SINGLE DWELLING UNIT THEY SHALL BE INTERCONNECTED IN SUCH A MANNER THAT THE ACTUATION OF ONE SHALL CAUSE ACTUATION OF ALL ALARMS WITHIN THE DWELLING UNIT.
3. SMOKE ALARMS SHALL BE INSTALLED NOT LESS THAN 3 FT HORIZONTALLY FROM THE DOOR OR OPENING OF A BATHROOM THAT CONTAINS A BATHTUB OR SHOWER UNLESS THIS WOULD PREVENT PLACEMENT OF A SMOKE ALARM REQUIRED BY CODE.
4. SMOKE ALARMS AND CARBON MONOXIDE ALARMS SHALL RECEIVE PRIMARY POWER FROM THE BUILDING WIRING SERVED FROM A COMMERCIAL SOURCE AND, WHERE PRIMARY POWER IS INTERRUPTED, SHALL RECEIVE POWER FROM A BATTERY. WIRING SHALL BE PERMANENT AND WITHOUT A DISCONNECTING SWITCH OTHER THAN THOSE REQUIRED FOR OVERCURRENT PROTECTION.
5. SMOKE ALARMS SHALL BE UL-LISTED IN ACCORDANCE WITH UL 217. CARBON MONOXIDE ALARMS SHALL BE UL LISTED IN ACCORDANCE WITH UL 2034. COMBINATION SMOKE AND CARBON MONOXIDE ALARMS SHALL BE UL LISTED IN ACCORDANCE WITH UL 217 AND UL 2034.

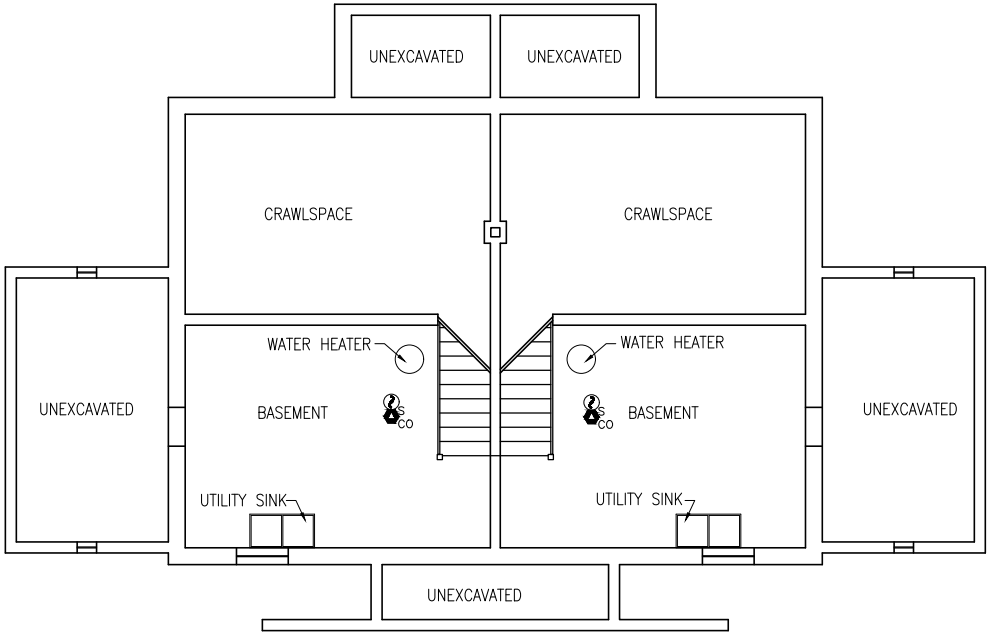

1 FA2.1 BASEMENT FIRE AND CARBON MONOXIDE ALARM PLAN
1/4" = 1'-0"

4 0 4 8
SCALE OF FEET

NORTH

STATE OF ARKANSAS PROFESSIONAL ENGINEER No. 17048 MICHAEL JONATHAN SHUMPERT
3/30/2026

DESIGNED: R. RICHTER	SUB SHEET NO.	TITLE OF SHEET	DRAWING NO.
CADD T. FREEMAN	FA2.1	BLDG 71 FIRE AND CO ALARM BASEMENT FLOOR PLAN	128 80081
TECH. REVIEW: M. SHUMPERT		HOT SPRINGS NATIONAL PARK HOT SPRINGS, ARKANSAS	PMIS/PKG NO. 245945
DATE: 03/30/2026			SHEET 17 OF 19

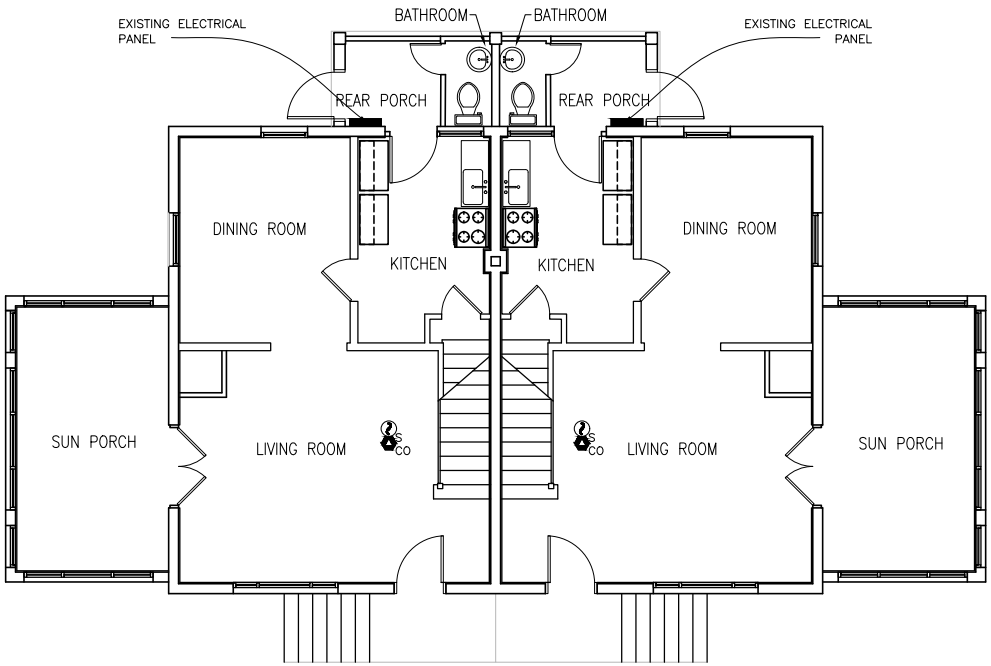

1 FA2.2 FIRST FLOOR FIRE AND CARBON MONOXIDE ALARM PLAN
1/4" = 1'-0"

FIRE ALARM LEGEND

CO — SINGLE STATION CARBON MONOXIDE/SMOKE ALARM WITH INTEGRAL 177CD STROBE AND BACK-UP BATTERY

GENERAL NOTES

1. SMOKE ALARMS AND CARBON MONOXIDE ALARMS SHALL BE INSTALLED IN ACCORDANCE WITH INTERNATIONAL RESIDENTIAL CODE (IRC) (2024 EDITION), SECTIONS R314 AND R315, NATIONAL ELECTRICAL CODE (2023 EDITION) AND NFPA 72 (2025 EDITION).
2. WHERE TWO OR MORE SMOKE ALARMS OR CARBON MONOXIDE ALARMS ARE INSTALLED WITHIN A SINGLE DWELLING UNIT THEY SHALL BE INTERCONNECTED IN SUCH A MANNER THAT THE ACTUATION OF ONE SHALL CAUSE ACTUATION OF ALL ALARMS WITHIN THE DWELLING UNIT.
3. SMOKE ALARMS SHALL BE INSTALLED NOT LESS THAN 3 FT HORIZONTALLY FROM THE DOOR OR OPENING OF A BATHROOM THAT CONTAINS A BATHTUB OR SHOWER UNLESS THIS WOULD PREVENT PLACEMENT OF A SMOKE ALARM REQUIRED BY CODE.
4. SMOKE ALARMS AND CARBON MONOXIDE ALARMS SHALL RECEIVE PRIMARY POWER FROM THE BUILDING WIRING SERVED FROM A COMMERCIAL SOURCE AND, WHERE PRIMARY POWER IS INTERRUPTED, SHALL RECEIVE POWER FROM A BATTERY. WIRING SHALL BE PERMANENT AND WITHOUT A DISCONNECTING SWITCH OTHER THAN THOSE REQUIRED FOR OVERCURRENT PROTECTION.
5. SMOKE ALARMS SHALL BE UL-LISTED IN ACCORDANCE WITH UL 217. CARBON MONOXIDE ALARMS SHALL BE UL LISTED IN ACCORDANCE WITH UL 2034. COMBINATION SMOKE AND CARBON MONOXIDE ALARMS SHALL BE UL LISTED IN ACCORDANCE WITH UL 217 AND UL 2034.

4 0 4 8
SCALE OF FEET

NORTH

STATE OF ARKANSAS PROFESSIONAL ENGINEER No. 17048 MICHAEL JONATHAN SHUMPERT
3/30/2026

DESIGNED: R. RICHTER CADD T. FREEMAN TECH. REVIEW: M. SHUMPERT DATE: 03/30/2026	SUB SHEET NO. FA2.2	TITLE OF SHEET BLDG 71 FIRE AND CO ALARM FIRST FLOOR PLAN HOT SPRINGS NATIONAL PARK HOT SPRINGS, ARKANSAS	DRAWING NO. 128 80081 PMIS/PKG NO. 245945 SHEET 18 OF 19

FIRE ALARM LEGEND

S — SINGLE STATION SMOKE ALARM WITH INTEGRAL 177CD STROBE AND BACK-UP BATTERY

S CO — SINGLE STATION CARBON MONOXIDE/SMOKE ALARM WITH INTEGRAL 177CD STROBE AND BACK-UP BATTERY

GENERAL NOTES

1. SMOKE ALARMS AND CARBON MONOXIDE ALARMS SHALL BE INSTALLED IN ACCORDANCE WITH INTERNATIONAL RESIDENTIAL CODE (IRC) (2024 EDITION), SECTIONS R314 AND R315, NATIONAL ELECTRICAL CODE (2023 EDITION) AND NFPA 72 (2025 EDITION).
2. WHERE TWO OR MORE SMOKE ALARMS OR CARBON MONOXIDE ALARMS ARE INSTALLED WITHIN A SINGLE DWELLING UNIT THEY SHALL BE INTERCONNECTED IN SUCH A MANNER THAT THE ACTUATION OF ONE SHALL CAUSE ACTUATION OF ALL ALARMS WITHIN THE DWELLING UNIT.
3. SMOKE ALARMS SHALL BE INSTALLED NOT LESS THAN 3 FT HORIZONTALLY FROM THE DOOR OR OPENING OF A BATHROOM THAT CONTAINS A BATHTUB OR SHOWER UNLESS THIS WOULD PREVENT PLACEMENT OF A SMOKE ALARM REQUIRED BY CODE.
4. SMOKE ALARMS AND CARBON MONOXIDE ALARMS SHALL RECEIVE PRIMARY POWER FROM THE BUILDING WIRING SERVED FROM A COMMERCIAL SOURCE AND, WHERE PRIMARY POWER IS INTERRUPTED, SHALL RECEIVE POWER FROM A BATTERY. WIRING SHALL BE PERMANENT AND WITHOUT A DISCONNECTING SWITCH OTHER THAN THOSE REQUIRED FOR OVERCURRENT PROTECTION.
5. SMOKE ALARMS SHALL BE UL-LISTED IN ACCORDANCE WITH UL 217. CARBON MONOXIDE ALARMS SHALL BE UL LISTED IN ACCORDANCE WITH UL 2034. COMBINATION SMOKE AND CARBON MONOXIDE ALARMS SHALL BE UL LISTED IN ACCORDANCE WITH UL 217 AND UL 2034.

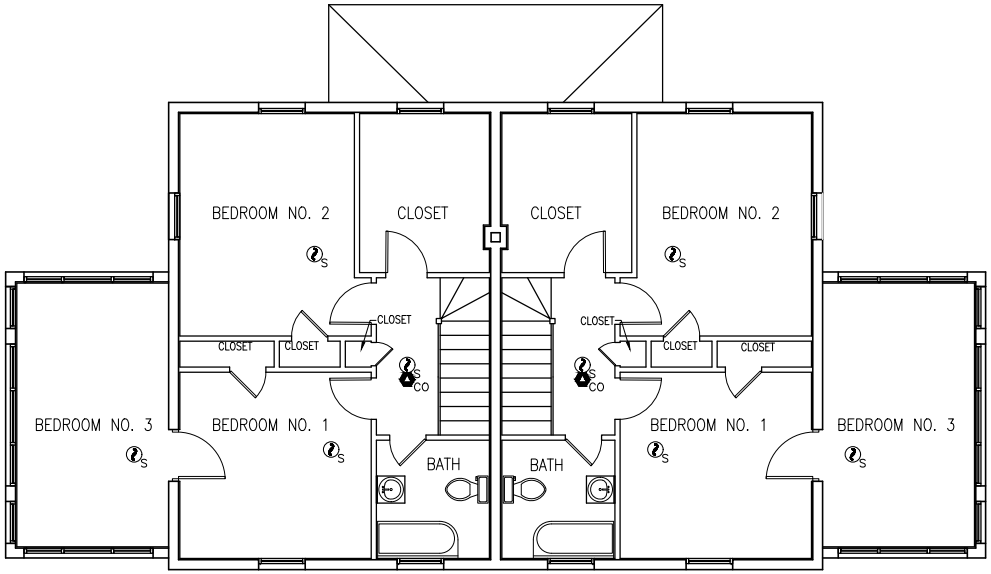

1 FA2.3 SECOND FLOOR FIRE AND CARBON MONOXIDE ALARM PLAN
1/4" = 1'-0"

4 0 4 8
SCALE OF FEET

NORTH

STATE OF ARKANSAS PROFESSIONAL ENGINEER No. 17048 MICHAEL JONATHAN SHUMPERT
3/30/2026

DESIGNED: R. RICHTER CADD T. FREEMAN TECH. REVIEW: M. SHUMPERT DATE: 03/30/2026	SUB SHEET NO. FA2.3	TITLE OF SHEET BLDG 71 FIRE AND CO ALARM SECOND FLOOR PLAN HOT SPRINGS NATIONAL PARK HOT SPRINGS, ARKANSAS	DRAWING NO. 128 80081 PMIS/PKG NO. 245945 SHEET 19 OF 19