US Army Corps
of Engineers ®
HONOLULU DISTRICT

JOINT BASE PEARL HARBOR-HICKAM, OAHU, HAWAII
FY22 HAWAII AIR NATIONAL GUARD (HIANG) F-22 PLUS-UP
EGRESS MAINTENANCE FACILITY

PROJECT AREA

PROJECT VINCINITY MAP

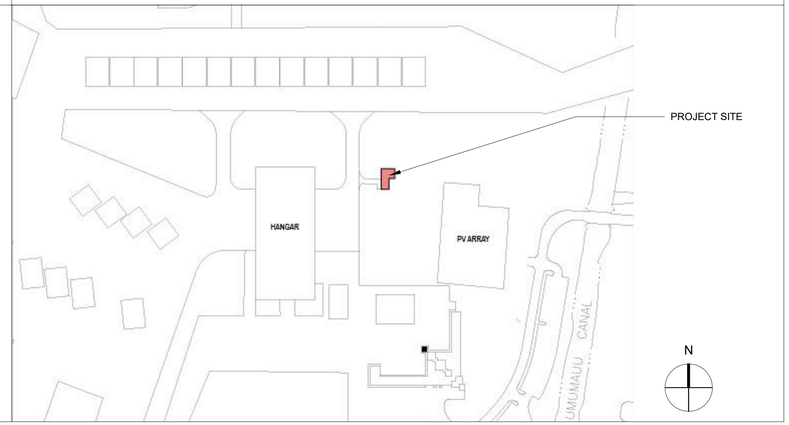

ISSUE DATE: 15 OCTOBER 2025

SHEET LIST

SHEET NUMBER	SHEET NAME
GENERAL	
G-001	COVER SHEET
G-002	GENERAL NOTES, ABBREVIATIONS
G-003	MOUNTING HEIGHTS & DOOR CLEARANCES
CIVIL	
V-101	EXISTING CONDITIONS
B-101	BORING LOCATIONS
B-102	BORING LEGEND AND LOGS
C-001	CIVIL NOTES
C-002	EROSION AND SEDIMENT CONTROL NOTES
C-003	UTILITY NOTES
C-004	PHASING NOTES
C-101	HAUL ROUTE
C-102	PHASING PLAN - PHASE 1
C-103	PHASING PLAN - PHASE 2
C-104	EROSION AND SEDIMENT CONTROL INITIAL PLAN
C-105	EROSION AND SEDIMENT CONTROL INTERMEDIATE PLAN
C-106	EROSION AND SEDIMENT CONTROL FINAL PLAN
CD101	DEMOLITION PLAN
CS101	SITE PLAN
CS401	ENLARGED SITE PLAN
CG101	GRADING PLAN
CG301	SITE SECTIONS
CG401	ENLARGED GRADING PLAN
CU101	UTILITY PLAN
CU201	UTILITY PROFILES
C-501	EROSION AND SEDIMENT CONTROL DETAILS
C-502	SITE DETAILS
C-503	SITE DETAILS
C-504	UTILITY DETAILS
C-505	UTILITY DETAILS
C-506	UTILITY DETAILS
C-507	PHASING DETAILS
C-508	PHASING DETAILS
C-509	PHASING DETAILS
C-801	EROSION AND SEDIMENT CONTROL INITIAL PLAN (BID OPTION)
C-802	EROSION AND SEDIMENT CONTROL INTERMEDIATE PLAN (BID OPTION)
C-803	EROSION AND SEDIMENT CONTROL FINAL PLAN (BID OPTION)
C-804	DEMOLITION PLAN (BID OPTION)
C-805	SITE PLAN (BID OPTION)
C-806	ENLARGED SITE PLAN (BID OPTION)
C-807	GRADING PLAN (BID OPTION)
C-808	SITE SECTION (BID OPTION)
C-809	ENLARGED GRADING PLAN (BID OPTION)
C-810	UTILITY PLAN (BID OPTION)
C-811	UTILITY PROFILES (BID OPTION)
C-812	UTILITY DETAILS (BID OPTION)
STRUCTURAL	
S-001	STRUCTURAL NOTES
S-002	STRUCTURAL NOTES
S-101	FOUNDATION PLAN
S-102	ROOF FRAMING PLAN
S-201	BUILDING ELEVATIONS
S-301	BUILDING SECTION
S-501	TYPICAL MICROPILE DETAILS
S-502	TYPICAL CMU WALL DETAILS
S-503	TYPICAL CONCRETE WALL DETAILS
S-504	SECTIONS AND DETAILS
S-505	SECTIONS AND DETAILS
S-506	SECTIONS AND DETAILS
S-507	SECTIONS AND DETAILS
S-508	TYPICAL CONCRETE PAD DETAILS
S-801	PLAN AND DETAILS
S-802	SECTION AND DETAIL

SHEET LIST

SHEET NUMBER	SHEET NAME
ARCHITECTURAL	
A-001	AIR BARRIER FLOOR PLAN
A-002	AIR BARRIER BUILDING SECTIONS
A-101	FLOOR PLAN
A-102	ROOF PLAN
A-103	REFLECTED CEILING PLAN
A-104	SIGNAGE PLAN
A-201	ELEVATIONS
A-202	ELEVATIONS
A-301	BUILDING SECTIONS
A-401	PARTITION TYPES
A-402	WALL SECTIONS
A-411	SECTOR A - ENLARGED PLAN AND REFLECTED CEILING PLAN
A-412	SECTOR A - INTERIOR ELEVATIONS
A-413	SECTOR B - ENLARGED PLAN AND REFLECTED CEILING PLAN
A-414	SECTOR B - INTERIOR ELEVATIONS
A-501	ROOF DETAILS
A-502	CEILING & SIGNAGE DETAILS
A-503	DOOR DETAILS
A-504	LOUVER DETAILS
A-601	DOOR AND LOUVER SCHEDULES
A-602	FINISH AND SIGNAGE SCHEDULE
A-801	GOX CANOPY SHELTER PLANS AND ELEVATIONS
A-802	GOX CANOPY SHELTER SECTIONS AND DETAILS
FIRE PROTECTION	
F-001	BUILDING CODE SUMMARY
F-101	CODE COMPLIANCE SITE PLAN
F-102	FLOOR PLAN - LIFE SAFETY
FA101	FLOOR PLAN - FIRE ALARM-MASS NOTIFICATIONS
FA501	FIRE ALARM-MASS NOTIFICATION DETAILS
FA601	FIRE ALARM-MASS NOTIFICATION SYSTEM SEQUENCE OF OPERATIONS AND RISER DIAGRAM
FX001	FIRE PROTECTION NOTES, SYMBOLS AND ABBREVIATIONS
FX101	FLOOR PLAN - FIRE SPRINKLER
FX501	FIRE SPRINKLER DETAILS
PLUMBING	
P-001	PLUMBING LEGEND
P-101	PLUMBING PLAN - SANITARY
P-102	PLUMBING PLAN - DOMESTIC WATER AND COMPRESSED AIR
P-103	PLUMBING ROOF PLAN
P-501	PLUMBING DETAILS
P-502	PLUMBING DETAILS
P-601	PLUMBING SCHEDULES
P-701	PLUMBING ISOMETRICS
MECHANICAL	
M-001	MECHANICAL GENERAL NOTES, ABBREVIATIONS
M-101	OVERALL MECHANICAL PLAN
M-301	MECHANICAL SECTIONS
M-401	ENLARGED MECHANICAL PLAN
M-501	MECHANICAL DETAILS
M-502	MECHANICAL DETAILS
M-601	MECHANICAL EQUIPMENT SCHEDULES
M-602	MECHANICAL SCHEDULES
M-701	CONTROL DIAGRAM
M-702	CONTROL DIAGRAM
M-703	DDC POINTS LIST
ELECTRICAL	
E-001	ELECTRICAL NOTES AND LEGEND
ES101	ELCTRICAL SITE PLAN - EGRESS BUILDING
ES501	ELECTRICAL SITE DETAILS
ES502	ELECTRICAL SITE DETAILS
E-101	POWER PLAN
E-102	LIGHTING PLAN
E-103	MECHANICAL POWER PLAN
E-104	LIGHTNING PROTECTION PLAN
E-401	ENLARGED COMM ROOM - POWER PLAN
E-501	LUMINAIRE SCHEDULE
E-502	MISCELLANEOUS DETAILS
E-601	ONE-LINE DIAGRAM
E-701	PANEL SCHEDULES
E-801	EQUIPMENT SCHEDULE
TELECOMMUNICATIONS	
T-001	TELECOM NOTES AND LEGEND
T-002	TELECOMMUNICATION LIST, ABBREVIATIONS
TS101	TELECOMMUNICATIONS SITE PLAN - EGRESS BUILDING
TS501	DUCT SECTION DETAILS
TS502	TELECOM DETAILS
TS503	TELECOM MAINTENANCE HOLE DETAILS
TS504	TELECOM DETAILS
TS505	TELECOMMUNICATIONS DETAILS
TS506	TELECOMMUNICATIONS - EXIST 3428 EAST ELEVATION AND DETAIL PLAN
TS601	TELECOM GROUNDING DIAGRAM
T-101	TELECOMMUNICATIONS AND SECURITY PLAN
T-401	ENLARGED TELECOMMUNICATION ROOM - EGRESS BUILDING
T-402	ENLARGED TELECOMMUNICATION ROOMS - EXISTING B3428 TELECOM ROOM 141
T-501	TELECOMMUNICATIONS DETAILS
T-502	TELECOMMUNICATIONS DETAILS
T-503	TELECOMMUNICATIONS DETAILS
T-504	TELECOMMUNICATIONS DETAILS
T-505	TELECOMMUNICATIONS DETAILS
T-506	TELECOMMUNICATIONS DETAILS
T-507	TELECOMMUNICATIONS DETAILS
T-601	TELECOMMUNICATIONS RISER DIAGRAM
T-602	SECURITY RISER DIAGRAM
T-603	TELECOMMUNICATIONS DETAILS
T-604	TELECOMMUNICATIONS DETAILS

REVISED FINAL SUBMITTAL

US Army Corps
of Engineers ®

MARK	DESCRIPTION	DATE

ISSUE DATE: 15 OCTOBER 2025
SOLICITATION NO.: W912BA22F0002
CONTRACT NO.: W912BA15B0072

DESIGNED BY: J. VANN
DRAWN BY: K. PANANGANAN
CHECKED BY: J. VANN
SUBMITTED BY: E. EBERT
SIZE: ANSI D

US ARMY CORPS OF ENGINEERS
HONOLULU DISTRICT
FORT SHAFTER, OAHU, HAWAII

RIM ARCHITECTS
55 MERCHANT STREET SUITE 1400,
HONOLULU, HI 96813

JOINT BASE PEARL HARBOR-HICKAM, OAHU, HAWAII
FY22 HAWAI'AIR NATIONAL GUARD (HIANG) F-22 PLUS-UP
EGRESS MAINTENANCE FACILITY

COVER SHEET

SHEET ID
G-001

Plot Date: 10/17/2025 4:33:59 PM File Path: Autodesk Docs://18329.013 - HIANG F-22 Plus-Up Projects/NMD20596F_ES_ARCH.rvt

DRAWING ABBREVIATIONS

A	----------
A LABEL	CLASS A DOOR
A/C	AIR CONDITION
A/C UNIT	AIR CONDITIONING UNIT
A/E	ARCHITECT/ENGINEER
AB	ANCHOR BOLT
ACC	ACCESSIBLE
ACS	AUTOMATIC CONTROL SYSTEM
ACS DR	ACCESS DOOR
ACS PNL	ACCESS PANEL
ACT	ACOUSTICAL CEILING TILE
ADA	AMERICANS WITH DISABILITIES ACT
ADMIN	ADMINISTRATION
AFC	ABOVE FINISHED COUNTER
AFF	ABOVE FINISHED FLOOR
AFG	ABOVE FINISHED GRADE
AFS	ABOVE FINISHED SLAB
AGGR	AGGREGATE
AHU	AIR HANDLING UNIT
AIB	AIR INFILTRATION BARRIER
ALT	ALTERNATE
ALUM	ALUMINUM
ANOD	ANODIZE
APC	ACOUSTICAL PANEL CEILING
APPROX	APPROXIMATE
AR	AS REQUIRED
ARCH	ARCHITECT
ASC	ABOVE SUSPENDED CEILING
ASSY	ASSEMBLY
ATC	ACOUSTICAL TILE CEILING
AVG	AVERAGE
AW	ARCHITECTURAL WOODWORK
AWT	ACOUSTICAL WALL TREATMENT
B	----------
B LABEL	CLASS B DOOR
BALC	BALCONY
BB	BASEBOARD
BC	BOOKCASE
BD	BOARD
BDRY	BOUNDARY
BFF	BELOW FINISH FLOOR
BHMA	BUILDER'S HARDWARE MANUFACTURER'S ASSOCIATION
BLDG	BUILDING
BLKG	BLOCKING
BLT IN	BUILT-IN
BN	BULLNOSE
BOS	BOTTOM OF STEEL
BOT	BOTTOM
BP	BUILDING PAPER
BRKT	BRACKET
BSMT	BASEMENT
BTWN	BETWEEN
BUR	BUILT-UP ROOFING
C	----------
C CONC	CAST CONCRETE
C LABEL	CLASS C DOOR
CAB	CABINET
CATW	CATWALK
CAV	CAVITY
CBB	CEMENTITIOUS (BACKER) BOARD
CD	CONSTRUCTION DOCUMENTS
CDW	CHILLED DRINKING WATER
CEM PLAS	CEMENT PLASTER
CER	CERAMIC
CF	CONTRACTOR FURNISHED
CF/CI	CONTRACTOR FURNISHED/CONTRACTOR INSTALLED
CFE	CONTRACTOR FURNISHED EQUIPMENT
CFLG	COUNTERFLASHING
CFM	CUBIC FEET PER MINUTE
CFMF	COLD-FORMED METAL FRAMING
CFS	CUBIC FEET PER SECOND
CG	CORNER GUARD
CI	CAST IRON
CIP	CAST-IN-PLACE
CJ	CONTROL JOINT
CL	CENTER LINE
CLG	CEILING
CLG DIFF	CEILING DIFFUSER
CLG HT	CEILING HEIGHT
CLL	COLUMN LINE
CLO	CLOSET
CLR	COLOR
CLRM	CLASSROOM
CMU	CONCRETE MASONRY UNIT
CNDS	CONDENSATE
CDR	CARD READER
CO	CLEANOUT
COL	COLUMN
COMM	COMMUNICATION
CONC	CONCRETE
CONC FLR	CONCRETE FLOOR
CONF	CONFERENCE
CONT	CONTINUE
COORD	COORDINATE
CORR	CORRIDOR
CP	CONCRETE PIPE
CPT	CARPET
CR	CONTROL ROOM
CS	CAST STONE
CSWK	CASEWORK
CT	CERAMIC TILE
CTB	CERAMIC TILE BASE
CTF	CERAMIC TILE FLOOR
CTR	CENTER
CU FT	CUBIC FEET
CW	CASEMENT WINDOW
D	----------
D	DEPTH
D LABEL	CLASS D DOOR
DBL	DOUBLE
DEMO	DEMOLITION
DEPT	DEPARTMENT
DET	DETAIL
DIA	DIAMETER
DIR	DIRECTION
DIST	DISTANCE
DOC	DOCUMENT
DR	DOOR
DS	DOWNSPOUT
E	----------
E LABEL	CLASS E DOOR
EA	EACH
EF	EACH FACE
EIFS	EXTERIOR INSULATION AND FINISH SYSTEM
EJ	EXPANSION JOINT
ES	EACH SIDE
EL	ELEVATION
ELEV	ELEVATOR
ENTR	ENTRANCE
EPS	EXPANDED POLYSTYRENE BOARD (INSULATION)
EQ	EQUAL
EWC	ELECTRIC WATER COOLER
EXP	EXPOSED
EXT	EXTERIOR
EXT	EXTINGUISHER
EXT GR	EXTERIOR GRADE
F	----------
FA	FIRE ALARM
FAAP	FIRE ALARM ANNUNCIATOR PANEL
FAS BD	FASCIA BOARD
FC BRK	FACE BRICK
FCO	FLOOR CLEANOUT
FD	FLOOR DRAIN
FDTN	FOUNDATION
FE	FIRE EXTINGUISHER
FEC	FIRE EXTINGUISHER CABINET
FED	FEDERAL
FF	FINISH FACE
FF EL	FINISH FLOOR ELEVATION
FF INSUL	FOIL BACKED INSULATION
FGL	FIBERGLASS
FH	FIRE HOSE
FHP	FULL HEIGHT PARTITION
FIN	FINISH
FIN BS	FINISH BOTH SIDES
FIN FLR	FINISH FLOOR
FIN GR	FINISH GRADE
FIXT	FIXTURE
FLDG	FOLDING
FLEX	FLEXIBLE
FLG	FLOORING
FLMT	FLUSH MOUNT
FLR	FLOOR
FM	FACTORY MUTUAL
FOC	FACE OF CONCRETE
FOM	FACE OF MASONRY
FR	FIRE RESISTANT
FRG	FIBER REINFORCED GYPSUM
FRMG	FRAMING
FRP	FIBERGLASS REINFORCED PLASTIC
FRTW	FIRE RETARDANT TREATED WOOD
FS	FEDERAL SPECIFICATION
FSTNR	FASTENER
FT	FEET
FTG	FOOTING
FWC	FABRIC WALLCOVERING
G	----------
G	NATURAL GAS
GALV	GALVANIZED
GB	GRAB BAR
GFCI	GOVERNMENT FURNISHED CONTRACTOR INSTALLED
GFGI	GOVERNMENT INSTALLED GOVERNMENT INSTALLED
GFRG	GLASS-FIBER-REINFORCED GYPSUM
GLZ	GLAZING
GR FL	GROUND FLOOR
GUT	GUTTER
GYP BD	GYPSUM BOARD
GYP PLAS	GYPSUM PLASTER
H	----------
HB	HOSE BIBB
HDPE	HIGH DENSITY POLYETHYLENE
HDW	HARDWARE
HDWD	HARDWOOD
HEPA	HIGH EFFICIENCY PARTICULATE AIR (FILTER)
HM	HOLLOW METAL
HMD	HOLLOW METAL DOOR
HORIZ	HORIZONTAL
HT	HEIGHT
HYDR	HYDRAULIC
I	----------
IBC	INTERNATIONAL BUILDING CODE
INSUL	INSULATION
INT	INTERIOR
ILO	IN LIEU OF
J	----------
JAN	JANITOR
K	----------
KPD	KEYPAD
KIT	KITCHEN
KPL	KICKPLATE
L	----------
LAM	LAMINATE
LAV	LAVATORY
LBR	LUMBER
LBS	POUND
LDG	LANDING
LF	LINEAR FEET (FOOT)
LIB	LIBRARY
LIN	LINEAR
LKR	LOCKER
LOC	LOCATION
LT	LIGHT
LVDR	LOUVER DOOR
LVR	LOUVER
M	----------
MACH RM	MACHINE ROOM
MATL	MATERIAL
MAX	MAXIMUM
MC	MOISTURE CONTENT
MD	METAL DECK
MECH	MECHANICAL
MECH RM	MECHANICAL ROOM
MEMB	MEMBRANE
MF	MILL FINISH
MFR	MANUFACTURER
MID	MIDDLE
MIL STD	MILITARY STANDARD
MIN	MINIMUM, MINUTE
MIRR	MIRROR
MISC	MISCELLANEOUS
MLDG	MOLDING (MOULDING)
MO	MASONRY OPENING
MOD	MODIFY
MB	MOISTURE BARRIER
MTG	MOUNTING
MTL	METAL
MVBL	MOVABLE
MWP	MEMBRANE WATERPROOFING
N	----------
N	NORTH
NA	NOT APPLICABLE
NFPA	NATIONAL FIRE PROTECTION ASSOCIATION
NIC	NOT IN CONTRACT
NO	NUMBER
NOM	NOMINAL
NP	NO PAINT
NRC	NOISE REDUCTI
O	----------
OA	OVERALL
OC	ON CENTER
OD	OUTSIDE DIAMETER
OFD	OVERFLOW DRAIN
OFF	OFFICE
OGL	OBSCURE GLASS
OPH	OPPOSITE HAND
OPNG	OPENING
OPP	OPPOSITE
OPQ	OPAQUE
OWSJ	OPEN WEB STEEL JOIST
OPR	OPERABLE
ORD	OVERFLOW ROOF DRAIN
ORIG	ORIGINAL
P	----------
PA	PUBLIC ADDRESS
PAR	PARAPET
PAT	PATTERN
PB	PULL BOX
PBD	PARTICLEBOARD
PCC	PRECAST CONCRETE
PCF	POUNDS PER CUBIC FOOT
PCT	PERCENT
PERF	PERFORATED
PERIM	PERIMETER
PH	PHASE
PIL	PILASTER
PL	PROPERTY LINE
PL GL	PLATE GLASS
PLAM	PLASTIC LAMINATE
PLAS	PLASTER
PLBG	PLUMBING
PLG	PILING
PLYWD	PLYWOOD
PNL	PANEL
PP PL	PUSH/PULL PLATE
PR	PAIR
PRCST	PRECAST
PRKG	PARKING
PS CONC	PRESTRESSED CONCRETE
PSF	POUNDS PER SQUARE FOOT
PSI	POUNDS PER SQUARE INCH
PT	PRESSURE TREATED
PTD	PAPER TOWEL DISPENSER
PTDR	PAPER TOWEL DISPENSER AND RECEPTACLE
PTN	PARTITION
PWR	POWER
Q	----------
QT	QUARRY TILE
QTY	QUANTITY
R	----------
RB	RESILIENT BASE
RBM	REINFORCED BRICK MASONRY
RBR	RUBBER
RC	REINFORCED CONCRETE
RCP	REFLECTED CEILING PLAN
RD	ROOF DRAIN
RDG INS	RIGID INSULATION, SOLID
REC	RECESSED
REC ROOM	RECREATION ROOM
REF	REFERENCE
REM	REMOVABLE
REP	REPAIR
REPL	REPLACE
REQ	REQUIRE
REQD	REQUIRED
RESIL	RESILIENT
REST	RESTROOM
RF	RESILIENT FLOORING
RFG	ROOFING
RH	ROOF HATCH
RHR	RIGHT HAND REVERSE
RL	ROOF LEADER
RLG	RAILING
RM	ROOM
RO	ROUGH OPENING
RSD	ROLLING STEEL DOOR
RV	ROOF VENT
RVL	REVEAL
S	----------
SB	SPLASH BLOCK
SCHED	SCHEDULE
SD	SOAP DISPENSER
SF	SQUARE FOOT (FEET)
SFTWD	SOFTWOOD
SGL	SINGLE
SHT MTL FLASH	SHEET METAL (FLASHING)
SHTHG	SHEATHING
SHV	SHELVING
SIM	SIMILAR
SJ	SCORED JOINT
SKLT	SKYLIGHT
SLNT	SEALANT
SMK	SMOKE
SMLS	SEAMLESS
SND	SANITARY NAPKIN DISPENSER
SP EL	SPOT ELEVATION
SPEC	SPECIFICATION
SQ	SQUARE
SQ IN	SQUARE INCH
SQ YD	SQUARE YARD
SST	STAINLESS STEEL
ST	STAIRS
STD	STANDARD
STL JST	STEEL JOIST
STL RF DK	STEEL ROOF DECK
STOR	STORAGE
STR	STRINGERS
STRB/HRN	STROBE/HORN
SUB FL	SUBFLOOR
SV	SHEET VINYL
SW	SIDEWALK
T	----------
T	TREAD
T/S	TUB/SHOWER
TC	TERRA COTTA
TD	TRENCH DRAIN
TEL	TELEPHONE
TEMP	TEMPORARY
TER	TERRAZZO
TFF	TOP OF FINISH FLOOR
THK	THICKNESS
TK BD	TACKBOARD
TMPD GL	TEMPERED GLASS
TN	TRUE NORTH
TOF	TOP OF FOOTING
TOM	TOP OF MASONRY
TOP	TOP OF PARAPET
TOPO	TOPOGRAPHY
TOS	TOP OF SLAB
TRANS	TRANSOM
TRTD	TREATED
TSCD	TOILET SEAT COVER DISPENSER
TTD	TOILET TISSUE DISPENSER
TV	TELEVISION

GENERAL NOTES

PLAN GENERAL NOTES:
1. ALL DIMENSIOSN ARE TO FACE OF FINISH UNLESS NOTED OTHERWISE.
2. PATCH AND REPAIR ALL DAMAGED INTERIOR CONCRETE AND CMU WITHIN THE SCOPE OF WORK.
3. ALL CONCRETE AND CMU NOT OTHERWISE FINISHED OR COVERED SHALL BE PAINTED.
4. UNO, LOCATE EDGE OF DOOR OPENING 3" FROM ADJACENT WALL.
5. FOR NEW ACCESSIBLE TOILET INSTALLATION THE CENTERLINE OF ACCESSIBLE TOILET IS TO BE 17" FROM THE SIDE WALL OR PARTITION.

REFLECTED CEILING PLAN GENERAL NOTES:
1. ALL UTILITIES AT CEILING (LIGHTING FIXTURES, ELECTRICAL CONDUIT AND EQUIPMENT, COMMUNICATIONS CONDUIT AND EQUIPMENT, CABLE TRAYS, MECHANICAL DUCTS AND EQUIPMENT) SHALL BE INSTALLED TO MAINTAIN A MINIMUM OF 7'-6" AFF TO BOTTOM OF ALL SUCH UTILITIES AND UTILITY HOUSING.
2. ALL UTILITIES AT CEILING SHALL BE INSTALLED TIGHT TO THE SLAB OR BEAMS/GIRDERS - CONTRACTOR SHALL COORDINATE UTILITY CROSSINGS TO PROVIDE MAXIMUM HEADROOM CLEARANCE AND AVOID ENTERING/CROSSING STAIR ENCLOSURE.

PAINT OUT ALL EXPOSED CLG MOUNTED UTILITIES, CONDUIT - EXCEPT FIRE SPRINKLER HEADS

BUILDING SUMMARY

THE EGRESS SHOP/GOX CANOPY SHELTER/AGE READY PADS (CLIN 0008) IS PART OF THE A/E TASK ORDER IN SUPPORT OF THE HIANG F-22 MISSION.

SCOPE OF WORK:
PROVIDE ARCHITECTURAL AND ENGINEERING SERVICES TO CONSTRUCT AN EGRESS MAINTAINENCE FACILITY. THE PLANNED LOCATION FOR THIS NEW FACILITY IS ADJACENT TO THE MAINTENANCE BACK-SHOPS OF SQUADRON OPERATIONS FACILITY B3428. PROJECT INCLUDES ASPHALT PAVEMENTS TO PROVIDE ACCESS TO THE NEW FACILITY. PROJECT INCLUDES A CONCRETE AGE READY PAD (3 LOCATIONS).

INDEX OF DRAWINGS

NUMBERING SYSTEM:

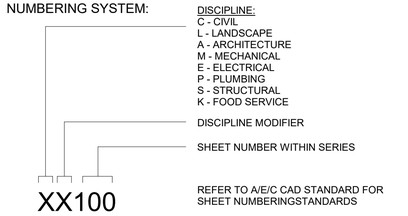

ANNOTATION CALLOUTS / DRAWING SYMBOLS

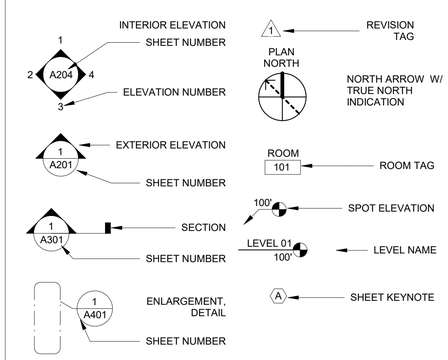

US Army Corps of Engineers ®

MARK	DESCRIPTION	DATE

ISSUE DATE: 15 OCTOBER 2025
SOLICITATION NO.: W912BA22F0002
CONTRACT NO.: W912BA19B0072

DESIGNED BY: J. VANN
DRAWN BY: K. PANANGANAN
CHECKED BY: J. VANN
SUBMITTED BY: E. EBERT
SIZE: ANSI D

US ARMY CORPS OF ENGINEERS
HONOLULU DISTRICT
FORT SHAFTER, OAHU, HAWAII

RIM ARCHITECTS
55 MERCHANT STREET SUITE 1400,
HONOLULU, HI 96813

JOINT BASE PEARL HARBOR-HICKAM, OAHU, HAWAII
FY'22 HAWAII AIR NATIONAL GUARD (HIANG) F-22 PLUS-UP

GENERAL NOTES, ABBREVIATIONS

SHEET ID
G-002

Plot Date: 10/17/2025 4:33:59 PM File Path: Autodesk Docs://B3029.013 - HIANG F-22 Plus-Up Projects/NMD2019087_ES_ARCH.rvt

REVISED FINAL SUBMITTAL

TOILET ROOMS

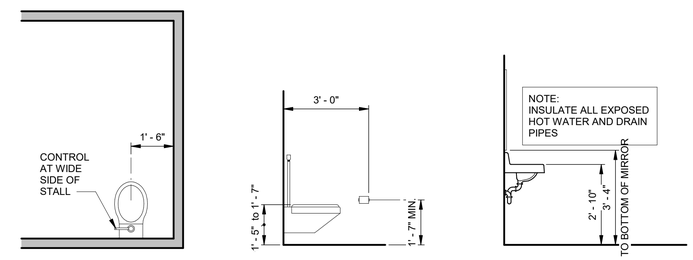

TOILET PLANS

TOILET ELEVATION

LAVATORY ELEVATION

DOORS

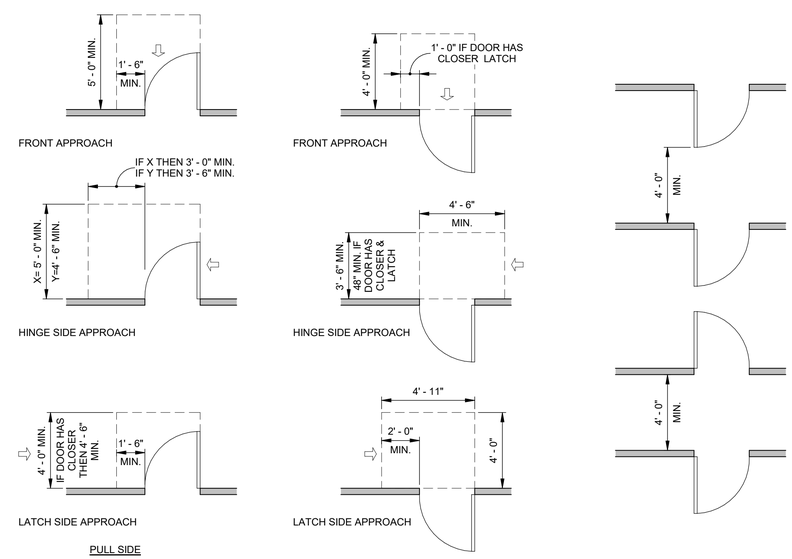

PULL SIDE

CLEAR FLOOR SPACE

CLEAR FLOOR SPACE AT SERIES OF DOORS

NOTES

1. CONTRACTOR TO NOTIFY ARCHITECT OF ANY CONFLICT BETWEEN THIS SHEET AND THE DRAWINGS OR SPECIFICATIONS PRIOR TO INSTALLATION.

2. INFORMATION APPEARING ON THIS SHET IS FOR ILLUSTRATION ONLY. CONTRACTOR TO VERIFY CONFORMANCE TO CONSTRUCTION DOCUMENTS, T.A.S. AND A.D.A. NOTIFY ARCHITECT IF CONFLICT OCCURS.

3. REFER TO ARCHITECTURAL DRAWINGS AND SPECIFICATIONS FOR ACTUAL DESIGN AND CONFIGURATIONS.

4. ALL DIMENSIONS ON THIS SHEET ARE TO FACE OF FINISH.

US Army Corps of Engineers ®

MARK	DESCRIPTION	DATE

ISSUE DATE: 15 OCTOBER 2025
SOLICITATION NO.: W912BA22F0002
CONTRACT NO.: W912BA15B0012

DESIGNED BY: J. VANN
DRAWN BY: K. PANANGAMAN
CHECKED BY: J. VANN
SUBMITTED BY: E. EBERT
SIZE: ANSI D

US ARMY CORPS OF ENGINEERS
HONOLULU DISTRICT
FORT SHAFTER, OAHU, HAWAII

RIM ARCHITECTS
55 MERCHANT STREET SUITE 1400,
HONOLULU, HI 96813

JOINT BASE PEARL HARBOR-HICKAM, OAHU, HAWAII
FY22 HAWAI AIR NATIONAL GUARD (HIANG) F-22 PLUS-UP

MOUNTING HEIGHTS & DOOR CLEARANCES

SHEET ID
G-003

REVISED FINAL SUBMITTAL

Plot Date: 10/17/2025 4:33:59 PM File Path: Autodesk Docs://18329.013 - HIANG F-22 Plus-Up Projects/NMD20598F_ES_ARCH.rvt

EXIST CONCRETE PAVEMENT

T A X I W A Y

EDGE OF ASPHALT SHOULDER

T O W W A Y

EXIST DRAIN INLET
GRATE: 5.47'
INV: 2.74'

EXIST DRAIN INLET
GRATE: 5.44'
INV: 2.49'

STA 316
"Y" CUT
ELEV = 6.41
N: 55796.65
E: 1657096.00

EXIST PIPE OUTFALL
INV: 2.02'

FUTURE DRIVEWAY INSTALLED BY OTHERS NOT IN CONTRACT

STA 116
MAG NAIL
ELEV = 6.39
N: 55744.99
E: 1656741.28

261° 42' 49" 358.47'

EXIST DRAIN INLET
GRATE: 6.35'
INV: 2.40'

EXISTING STORMWATER QUALITY BASIN

EXIST FIRE HYDRANT

EXIST COMMUNICATION CONDUIT

3 IRRIGATION BOXES

HANGAR 3428

283.89'

182° 41' 14"

030° 45' 08"

338.55'

EXIST CONCRETE PAVEMENT

EXIST STORAGE CONTAINER

STA 5154
"Y" CUT
ELEV = 5.11
N: 55506.24
E: 1656839.41

EXIST PV ARRAY

83.49' 090° 21' 58"

EXIST SEWER MANHOLE

068° 05' 15"

120.12'

STA 115
HUB W/ TACK
ELEV = 3.61
N: 55505.71
E: 1656922.89

EXIST ELEC PANEL ON CONCRETE PAD

EXIST FIRE HYDRANT

STA 129
PAINTED "Y"
ELEV = 6.73
N: 55461.42
E: 1656727.97

EXIST AC PAVEMENT

PLAN NORTH

0 30' 60'

A1 EXISTING CONDITIONS

SCALE 1" = 30'

LEGEND:

- 4.0 EXISTING CONTOUR
- UGC EXISTING COMMUNICATIONS LINE
- W X EXISTING WATER LINE
- D X EXISTING STORM LINE
- S X EXISTING SEWER LINE
- SURVEY TRAVERSE CLOSURE
- EXISTING RIPRAP
- EXISTING SEWER MANHOLE
- EXISTING SEWER COVER
- EXISTING DRAIN INLET
- EXISTING FIRE HYDRANT
- EXISTING ELECTRICAL BOX
- EXISTING WATER VALVE
- EXISTING IRRIGATION CONTROLLER BOX
- EXISTING IRRIGATION BOXES
- EXISTING FLOOD LIGHT ON PEDESTAL
- EXISTING TREE

US Army Corps of Engineers®

MARK	DESCRIPTION	DATE

DESIGNED BY: J. LOWE
DRAWN BY: T. CRIST
CHECKED BY: M. UNTEN
SUBMITTED BY:
SIZE: ANSI D
ISSUE DATE: OCT 15, 2025
SOLICITATION NO.: W9128A22F0002
CONTRACT NO.: W9128A19D0012

U.S. ARMY CORPS OF ENGINEERS
HONOLULU DISTRICT
FORT SHAFTER, HAWAII

COFFMAN ENGINEERS
745 FORT STREET, SUITE 400
HONOLULU, HAWAII 96813

JOINT BASE PEARL HARBOR-HICKAM, OAHU, HAWAII
FY22 HAWAII AIR NATIONAL GUARD (HIANG) F-22 PLUS UP
ADD EGRESS SHOP

EXISTING CONDITIONS

SHEET ID
V-101

REVISED FINAL SUBMITTAL

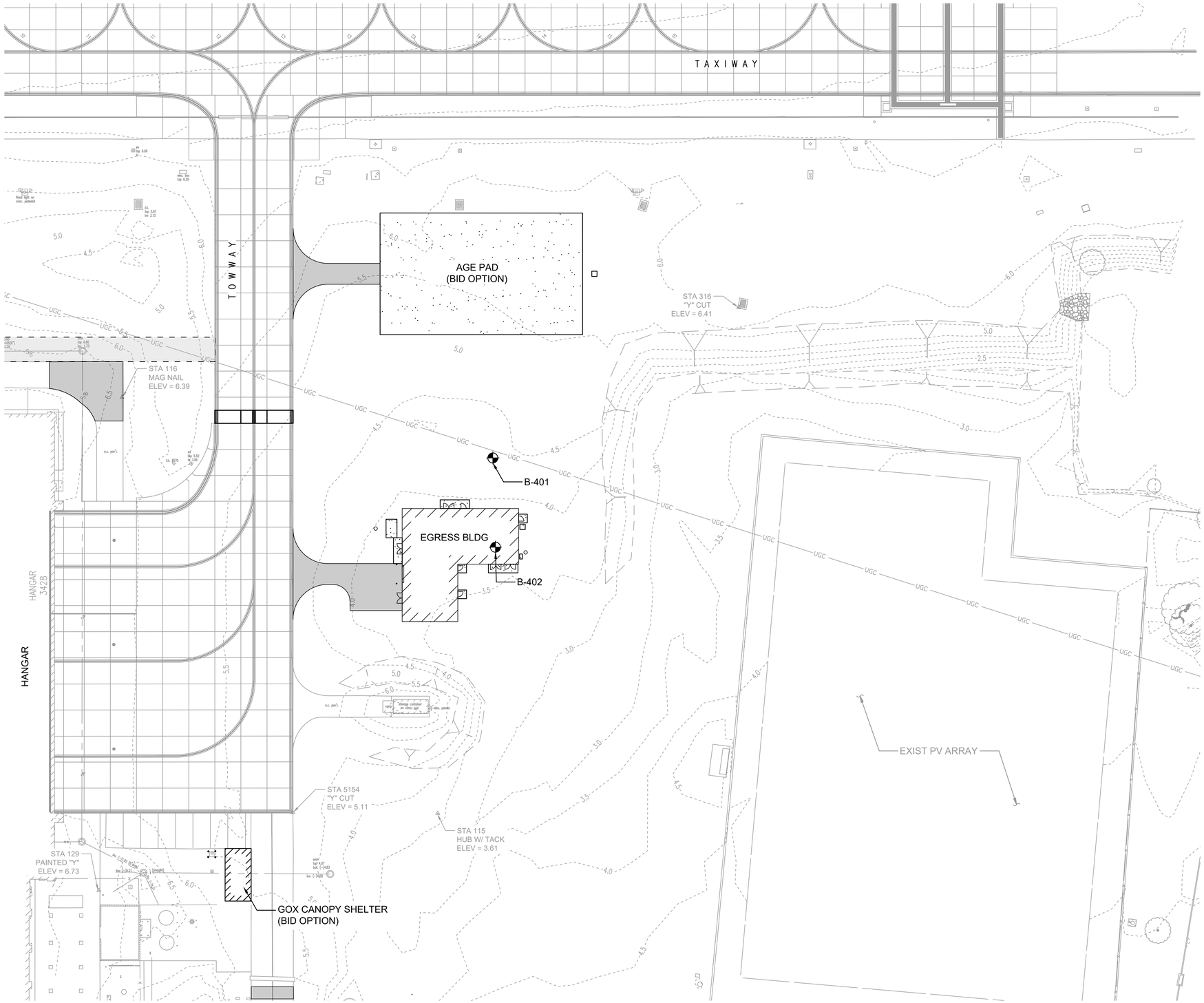

LEGEND:

- APPROXIMATE BORING LOCATION
- AC PAVEMENT
- CONCRETE

A1 BORING LOCATIONS

SCALE 1" = 30'

US Army Corps of Engineers®

MARK	DESCRIPTION	DATE

DESIGNED BY: J. LOWE	ISSUE DATE: OCT 15, 2025
DRAWN BY: T. CRIST	SOLICITATION NO.: W9128A22F0002
CHECKED BY: M. UNTEN	CONTRACT NO.: W9128A19D0012
SUBMITTED BY:	
SIZE: ANSI D	

U.S. ARMY CORPS OF ENGINEERS
HONOLULU DISTRICT
FORT SHAFTER, HAWAII

COFFMAN ENGINEERS
745 FORT STREET, SUITE 400
HONOLULU, HAWAII 96813

JOINT BASE PEARL HARBOR-HICKAM, OAHU, HAWAII
FY22 HAWAII AIR NATIONAL GUARD (HIANG) F-22 PLUS UP
ADD EGRESS SHOP

BORING LOCATIONS

SHEET ID

B-101

REVISED FINAL SUBMITTAL

GEOLABS, INC.
Geotechnical Engineering

Soil Log Legend

UNIFIED SOIL CLASSIFICATION SYSTEM (USCS)

MAJOR DIVISIONS			USCS	TYPICAL DESCRIPTIONS
COARSE-GRAINED SOILS MORE THAN 50% OF MATERIAL RETAINED ON NO. 200 SIEVE	GRAVELS MORE THAN 50% OF COARSE FRACTION RETAINED ON NO. 4 SIEVE	CLEAN GRAVELS LESS THAN 5% FINES	GW	WELL-GRADED GRAVELS, GRAVEL-SAND MIXTURES, LITTLE OR NO FINES
			GP	POORLY-GRADED GRAVELS, GRAVEL-SAND MIXTURES, LITTLE OR NO FINES
		GRAVELS WITH FINES MORE THAN 12% FINES	GM	SILTY GRAVELS, GRAVEL-SAND-SILT MIXTURES
			GC	CLAYEY GRAVELS, GRAVEL-SAND-CLAY MIXTURES
	SANDS 50% OR MORE OF COARSE FRACTION PASSING THROUGH NO. 4 SIEVE	CLEAN SANDS LESS THAN 5% FINES	SW	WELL-GRADED SANDS, GRAVELLY SANDS, LITTLE OR NO FINES
			SP	POORLY-GRADED SANDS, GRAVELLY SANDS, LITTLE OR NO FINES
		SANDS WITH FINES MORE THAN 12% FINES	SM	SILTY SANDS, SAND-SILT MIXTURES
			SC	CLAYEY SANDS, SAND-CLAY MIXTURES
FINE-GRAINED SOILS 50% OR MORE OF MATERIAL PASSING THROUGH NO. 200 SIEVE	SILTS AND CLAYS	LIQUID LIMIT LESS THAN 50	ML	INORGANIC SILTS AND VERY FINE SANDS, ROCK FLOUR, SILTY OR CLAYEY FINE SANDS OR CLAYEY SILTS WITH SLIGHT PLASTICITY
			CL	INORGANIC CLAYS OF LOW TO MEDIUM PLASTICITY, GRAVELLY CLAYS, SANDY CLAYS, SILTY CLAYS, LEAN CLAYS
			OL	ORGANIC SILTS AND ORGANIC SILTY CLAYS OF LOW PLASTICITY
	SILTS AND CLAYS	LIQUID LIMIT 50 OR MORE	MH	INORGANIC SILT, MICACEOUS OR DIATOMACEOUS FINE SAND OR SILTY SOILS
			CH	INORGANIC CLAYS OF HIGH PLASTICITY
			OH	ORGANIC CLAYS OF MEDIUM TO HIGH PLASTICITY, ORGANIC SILTS
HIGHLY ORGANIC SOILS			PT	PEAT, HUMUS, SWAMP SOILS WITH HIGH ORGANIC CONTENTS

NOTE: DUAL SYMBOLS ARE USED TO INDICATE BORDERLINE SOIL CLASSIFICATIONS

LEGEND

- (2-INCH) O.D. STANDARD PENETRATION TEST
- (3-INCH) O.D. MODIFIED CALIFORNIA SAMPLE
- SHELBY TUBE SAMPLE
- GRAB SAMPLE
- CORE SAMPLE
- WATER LEVEL OBSERVED IN BORING AT TIME OF DRILLING
- WATER LEVEL OBSERVED IN BORING AFTER DRILLING
- WATER LEVEL OBSERVED IN BORING OVERNIGHT

LL LIQUID LIMIT (NP=NON-PLASTIC)
PI PLASTICITY INDEX (NP=NON-PLASTIC)
TV TORVANE SHEAR (tsf)
UC UNCONFINED COMPRESSION OR UNIAXIAL COMPRESSIVE STRENGTH
TXUU UNCONSOLIDATED UNDRAINED TRIAXIAL COMPRESSION (ksf)

Plate A-0.1

LOG LEGEND FOR SOIL 8426-00.GPJ GEOLABS.GDT 8/30/22

GEOLABS, INC.
Geotechnical Engineering

Soil Classification Log Key
(with deviations from ASTM D2488)

GEOLABS, INC. CLASSIFICATION*

GRANULAR SOIL (- #200 <50%)

- **PRIMARY constituents are composed of the largest** percent of the soil mass. Primary constituents are capitalized and bold (i.e., GRAVEL, SAND)
- **SECONDARY constituents are composed of a** percentage less than the primary constituent. If the soil mass consists of 12 percent or more fines content, a cohesive constituent is used (SILTY or CLAYEY); otherwise, a granular constituent is used (GRAVELLY or SANDY) provided that the secondary constituent consists of 20 percent or more of the soil mass. Secondary constituents are capitalized and bold (i.e., **SANDY GRAVEL, CLAYEY SAND) and precede the** primary constituent.
- **accessory descriptions compose of the following:**
  with some: >12%
  with a little: 5 - 12%
  with traces of: <5%
  accessory descriptions are lower cased and follow the Primary and Secondary Constituents
  (i.e., SILTY GRAVEL with a little sand)

COHESIVE SOIL (- #200 ≥50%)

- **PRIMARY constituents are based on plasticity. Primary** constituents are capitalized and bold (i.e., CLAY, SILT)
- **SECONDARY constituents are composed of a** percentage less than the primary constituent, but more than 20 percent of the soil mass. Secondary constituents are capitalized and bold (i.e., SANDY CLAY, SILTY CLAY, CLAYEY SILT) and precede the primary constituent.
- **accessory descriptions compose of the following:**
  with some: >12%
  with a little: 5 - 12%
  with traces of: <5%
  accessory descriptions are lower cased and follow the Primary and Secondary Constituents
  (i.e., SILTY CLAY with some sand)

EXAMPLE: Soil Containing 60% Gravel, 25% Sand, 15% Fines. Described as: SILTY GRAVEL with some sand

RELATIVE DENSITY / CONSISTENCY

Granular Soils			Cohesive Soils			
N-Value (Blows/Foot)		Relative Density	N-Value (Blows/Foot)		PP Readings (tsf)	Consistency
SPT	MCS		SPT	MCS		
0 - 4	0 - 7	Very Loose	0 - 2	0 - 4		Very Soft
4 - 10	7 - 18	Loose	2 - 4	4 - 7	< 0.5	Soft
10 - 30	18 - 55	Medium Dense	4 - 8	7 - 15	0.5 - 1.0	Medium Stiff
30 - 50	55 - 91	Dense	8 - 15	15 - 27	1.0 - 2.0	Stiff
> 50	> 91	Very Dense	15 - 30	27 - 55	2.0 - 4.0	Very Stiff
			> 30	> 55	> 4.0	Hard

MOISTURE CONTENT DEFINITIONS

Dry: Absence of moisture, dry to the touch
Moist: Damp but no visible water
Wet: Visible free water

ABBREVIATIONS

WOH: Weight of Hammer
WOR: Weight of Drill Rods
SPT: Standard Penetration Test Split-Spoon Sampler
MCS: Modified California Sampler
PP: Pocket Penetrometer

GRAIN SIZE DEFINITION

Description	Sieve Number and / or Size
Boulders	> 12 inches (305-mm)
Cobbles	3 to 12 inches (75-mm to 305-mm)
Gravel	3-inch to #4 (75-mm to 4.75-mm)
Coarse Gravel	3-inch to 3/4-inch (75-mm to 19-mm)
Fine Gravel	3/4-inch to #4 (19-mm to 4.75-mm)
Sand	#4 to #200 (4.75-mm to 0.075-mm)
Coarse Sand	#4 to #10 (4.75-mm to 2-mm)
Medium Sand	#10 to #40 (2-mm to 0.425-mm)
Fine Sand	#40 to #200 (0.425-mm to 0.075-mm)

***Soil descriptions are based on ASTM D2488-09a, Visual-Manual Procedure, with the above modifications by Geolabs, Inc. to the Unified Soil Classification System (USCS).**

Plate A-0.2

SOIL CLASS. LOG KEY 8426-00.GPJ GEOLABS.GDT 8/30/22

GEOLABS, INC.
Geotechnical Engineering

Rock Log Legend

ROCK DESCRIPTIONS

	BASALT		CONGLOMERATE
	BOULDERS		LIMESTONE
	BRECCIA		SANDSTONE
	CLINKER		SILTSTONE
	COBBLES		TUFF
	CORAL		VOID/CAVITY

ROCK DESCRIPTION SYSTEM

ROCK FRACTURE CHARACTERISTICS

The following terms describe general fracture spacing of a rock:

Massive:	Greater than 24 inches apart
Slightly Fractured:	12 to 24 inches apart
Moderately Fractured:	6 to 12 inches apart
Closely Fractured:	3 to 6 inches apart
Severely Fractured:	Less than 3 inches apart

DEGREE OF WEATHERING

The following terms describe the chemical weathering of a rock:

Unweathered:	Rock shows no sign of discoloration or loss of strength.
Slightly Weathered:	Slight discoloration inwards from open fractures.
Moderately Weathered:	Discoloration throughout and noticeably weakened though not able to break by hand.
Highly Weathered:	Most minerals decomposed with some corestones present in residual soil mass. Can be broken by hand.
Extremely Weathered:	Saprolite. Mineral residue completely decomposed to soil but fabric and structure preserved.

HARDNESS

The following terms describe the resistance of a rock to indentation or scratching:

Very Hard:	Specimen breaks with difficulty after several "pinging" hammer blows. Example: Dense, fine grain volcanic rock
Hard:	Specimen breaks with some difficulty after several hammer blows. Example: Vesicular, vugular, coarse-grained rock
Medium Hard:	Specimen can be broked by one hammer blow. Cannot be scraped by knife. SPT may penetrate by ~25 blows per inch with bounce. Example: Porous rock such as clinker, cinder, and coral reef
Soft:	Can be indented by one hammer blow. Can be scraped or peeled by knife. SPT can penetrate by ~100 blows per foot. Example: Weathered rock, chalk-like coral reef
Very Soft:	Crumbles under hammer blow. Can be peeled and carved by knife. Can be indented by finger pressure. Example: Saprolite

Plate A-0.3

LOG LEGEND FOR ROCK 8426-00.GPJ GEOLABS.GDT 8/30/22

BORING NOTES:

1. THE LOGS OF BORINGS INDICATE THE SUBSURFACE AND GROUNDWATER CONDITIONS ENCOUNTERED ONLY AT THE LOCATIONS WHERE THE BORINGS WERE DRILLED AND AT THE TIMES DESIGNATED ON THE LOGS, AND MAY NOT REPRESENT CONDITIONS AT OTHER LOCATIONS OR AT OTHER TIMES.
2. SUBSURFACE AND GROUNDWATER CONDITIONS MAY DIFFER FROM THE LOGS DUE TO THE PASSAGE OF TIME, IMPROVEMENTS CONSTRUCTED AT THE SITE, PATTERNS, AND OTHER CHANGES.
3. THE BORING LOGS ARE FURNISHED FOR THE CONVENIENCE OF THE BIDDER. NO ASSURANCE IS GIVEN THAT THE SUBSURFACE OR GROUNDWATER CONDITIONS SHOWN ON THE BORING LOGS ARE REPRESENTATIVE OF THE CONDITIONS TO BE ENCOUNTERED DURING CONSTRUCTION. THE BIDDER IS SOLELY RESPONSIBLE FOR ALL ASSUMPTIONS, DEDUCTIONS, OR CONCLUSIONS WHICH ARE MADE OR DERIVED FROM EXAMINATION OF THE SUBSURFACE INFORMATION AND DATA FURNISHED HEREIN.

GEOLABS, INC.
Geotechnical Engineering

FY22 HAWAII AIR NATIONAL GUARD F-22 PLUS-UP
JOINT BASE PEARL HARBOR-HICKAM
HAIKU, OAHU, HAWAII

Log of Boring **B-401**

Approximate Ground Surface Elevation (feet): 4 *

Laboratory: Other Tests	Moisture Content (%)	Dry Density (pcf)	Field: Core Recovery (%)	RQD (%)	Penetration Resistance (blows/foot)	Pocket Pen. (tsf)	Depth (feet)	USCS	Description
								ML	Brown with multi-color mottling SANDY SILT with some gravel, stiff, moist (fill)
Sieve - #200 = 10.3%	17	89			36			SW-SM	Tan GRAVELLY SAND (CORALLINE) with a little silt (coralline), medium dense, moist (fill)
	21				21			CH	Brown with multi-color mottling SANDY CLAY with a little gravel, medium stiff, moist (alluvium w/coral debris)
Direct Shear	25	96			10		5	GP	Tan SANDY GRAVEL (CORALLINE) with a little silt (coralline), loose (lagoonal deposit)
			0	0					
Sieve - #200 = 10.1%	34				4		10		
			0	0					
							15	GM	Grayish white SILTY GRAVEL with some sand, loose to medium dense (lagoonal deposit)
Sieve - #200 = 16.4%	32	91			20				
			33	0					
							20	SP	Whitish tan GRAVELLY SAND (CORALLINE) with traces of silt, dense (weathered sandstone)
	22				48				
			52	10					
							25		Tan CORAL, closely fractured, slightly weathered, hard (coral formation)
	25	87			75/5"				
			61	8					
							30		
			25	7	25/1"				
							35		

Date Started: July 22, 2022	Water Level: 3.5 ft. 07/22/2022 0956 HRS		Plate
Date Completed: July 22, 2022			
Logged By: B. Aiu	Drill Rig: CME-55D (Energy Transfer Ratio = 77.2%)		
Total Depth: 63 feet	Drilling Method: 4" Solid-Stem Auger		A - 8.1
Work Order: 8426-00	Driving Energy: 140 lb. wt., 30 in. drop		

BORING LOG 8426-00.GPJ GEOLABS.GDT 10/10/22

GEOLABS, INC.
Geotechnical Engineering

FY22 HAWAII AIR NATIONAL GUARD F-22 PLUS-UP
JOINT BASE PEARL HARBOR-HICKAM
HAIKU, OAHU, HAWAII

Log of Boring **B-401**

(Continued from previous plate)

Laboratory: Other Tests	Moisture Content (%)	Dry Density (pcf)	Field: Core Recovery (%)	RQD (%)	Penetration Resistance (blows/foot)	Pocket Pen. (tsf)	Depth (feet)	USCS	Description
UC	24	101	98	63	75/5"		40		
			52	24	50/2"		45	GC	Grayish tan CLAYEY GRAVEL (CORALLINE) with some sand (coralline), medium dense (weathered limestone)
Sieve - #200 = 18.1%	34	86	14	0	26		50	SM	Whitish tan SILTY SAND (CORALLINE) with a little gravel (coralline), loose (coralline detritus)
	29		0	0	4		55		
	31	90	48	0	11		60	ML	Dark brown SANDY SILT, stiff (weathered volcanic tuff)
	42	79			53		65		Boring terminated at 63 feet * ***Elevations estimated from the Add Egress Shope Grading and Drainage Plan downloaded from Rim Architects Sharepoint Site on October 3, 2022.
							70		

Date Started: July 22, 2022	Water Level: 3.5 ft. 07/22/2022 0956 HRS		Plate
Date Completed: July 22, 2022			
Logged By: B. Aiu	Drill Rig: CME-55D (Energy Transfer Ratio = 77.2%)		
Total Depth: 63 feet	Drilling Method: 4" Solid-Stem Auger		A - 8.2
Work Order: 8426-00	Driving Energy: 140 lb. wt., 30 in. drop		

BORING LOG 8426-00.GPJ GEOLABS.GDT 10/10/22

GEOLABS, INC.
Geotechnical Engineering

FY22 HAWAII AIR NATIONAL GUARD F-22 PLUS-UP
JOINT BASE PEARL HARBOR-HICKAM
HAIKU, OAHU, HAWAII

Log of Boring **B-402**

Approximate Ground Surface Elevation (feet): 4 *

Laboratory: Other Tests	Moisture Content (%)	Dry Density (pcf)	Field: Core Recovery (%)	RQD (%)	Penetration Resistance (blows/foot)	Pocket Pen. (tsf)	Depth (feet)	USCS	Description
								ML	Brown with multi-color mottling SANDY SILT with some gravel, stiff, moist (fill)
Sieve - #200 = 23.6%	18	111			20			SM	Tan SILTY SAND (CORALLINE) with a little gravel (coralline), medium dense, moist
	29				13		5		Boring terminated at 5 feet
							10		
							15		
							20		
							25		
							30		
							35		

Date Started: July 20, 2022	Water Level: 3.0 ft. 07/20/2022 1320 HRS		Plate
Date Completed: July 20, 2022			
Logged By: B. Aiu	Drill Rig: CME-55D (Energy Transfer Ratio = 77.2%)		
Total Depth: 5 feet	Drilling Method: 4" Solid-Stem Auger		A - 9
Work Order: 8426-00	Driving Energy: 140 lb. wt., 30 in. drop		

BORING LOG 8426-00.GPJ GEOLABS.GDT 10/10/22

US Army Corps of Engineers®

MARK	DESCRIPTION	DATE

DESIGNED BY: J. LOWIE
DRAWN BY: T. CRIST
CHECKED BY: M. UNTEN
SUBMITTED BY:
SIZE: ANSI D
ISSUE DATE: OCT 15, 2025
SOLICITATION NO.: W9128A22F0002
CONTRACT NO.: W9128A19D0012

U.S. ARMY CORPS OF ENGINEERS
HONOLULU DISTRICT
FORT SHAFTER, HAWAII

COFFMAN ENGINEERS
745 FORT STREET, SUITE 400
HONOLULU, HAWAII 96813

JOINT BASE PEARL HARBOR-HICKAM, OAHU, HAWAII
FY22 HAWAII AIR NATIONAL GUARD (HIANG) F-22 PLUS UP
ADD EGRESS SHOP

BORING LEGEND AND LOGS

SHEET ID
B-102

REVISED FINAL SUBMITTAL

GENERAL CIVIL NOTES:

1. EXISTING TOPOGRAPHY, STRUCTURES, AND SITE FEATURES ARE SHOWN SCREENED AND/OR LIGHT-LINED. NEW FINISH GRADE, STRUCTURES, AND SITE FEATURES ARE SHOWN HEAVY-LINED.

2. SURVEY DATUM REFERENCE IS NAD 83 ZONE 3. HAWAII STATE PLANE COORDINATES.

   SURVEYOR: KN SURVEYING, LLC
   500 ALAKAWA STREET, #100A
   HONOLULU, HI 96817

   SURVEY DATE: 15 MAR 2022

   ELEVATION REF : BRASS DISK "HICKAM 15"
   HICKAM BASE CONTROL
   ELEV: 3.90-FT

3. MAINTAIN, RELOCATE, OR REPLACE EXISTING SURVEY MONUMENTS, CONTROL POINTS, AND STAKES WHICH ARE DISTURBED OR DESTROYED. PERFORM THE WORK TO PRODUCE THE SAME LEVEL OF ACCURACY AS THE ORIGINAL MONUMENT(S) IN A TIMELY MANNER, AND AT THE CONTRACTOR'S EXPENSE.

4. COORDINATES AND DIMENSIONS SHOWN FOR ROADWAY IMPROVEMENTS ARE TO EDGES OF PAVEMENT.

5. STAGING AREA MUST BE FOR CONTRACTOR'S EMPLOYEE PARKING, CONTRACTOR'S TRAILERS AND ON-SITE STORAGE OF MATERIALS. THE CONTRACTOR IS RESPONSIBLE FOR FENCING AND/OR OTHERWISE SECURING STAGING AREA.

6. ELEVATIONS GIVEN ARE TO FINISH GRADE UNLESS OTHERWISE NOTED.

7. SLOPE UNIFORMLY BETWEEN SPOT ELEVATIONS SHOWN.

8. WHERE INDICATED ON THE DRAWINGS, AREAS MUST BE PAVED OR COVERED WITH BROKEN CONCRETE (RIP RAP). ALL OTHER AREAS DISTURBED BY THE CONTRACTOR MUST BE SEEDED WITH GRASS PER SPECIFICATIONS. (SEE GRASSING SPECIFICATION SECTION 32 92 19).

9. CONTRACTOR MUST BE RESPONSIBLE FOR IMPLEMENTING AND MAINTAINING EROSION CONTROL DEVICES DURING CONSTRUCTION.

10. CONTRACTOR MUST COMPLY WITH ALL FEDERAL, STATE, AND LOCAL REQUIREMENTS FOR EROSION AND SEDIMENTATION CONTROL AND TAKE ALL OTHER MEASURES TO POSITIVELY PRECLUDE EROSION MATERIALS FROM LEAVING THE SITE. CONTRACTOR MUST SUBMIT AN EROSION CONTROL PLAN AND RECEIVE APPROVAL FROM THE CONTRACTING OFFICER AND THE 154 CES/CEV ENVIRONMENTAL MANAGEMENT PRIOR TO BEGINNING ANY CONSTRUCTION ACTIVITIES.

11. CONTRACTOR MUST SUBMIT A TRAFFIC CONTROL PLAN TO THE CONTRACTING OFFICER FOR APPROVAL. ALL ROADS MUST BE OPEN TO TRAFFIC. THE TRAFFIC CONTROL PLAN MUST BE PREPARED IN ACCORDANCE WITH THE MANUAL ON UNIFORM TRAFFIC CONTROL DEVICES (MUTCD), AND LOCAL STANDARDS.

12. BASE CIVIL ENGINEERING WORK CLEARANCE REQUEST FORM AF IMT FORM 103 AND JBPHH DIG PERMIT REQUEST FOR JBPHHINST 11013.1 ARE TO BE COMPLETED PRIOR TO THE START OF ANY WORK. UPON COMPLETION, CONTRACTOR MUST CALL HAWAII ONE CALL (HOC) UTILITY LOCATING SERVICE. HOC WILL MARK UTILITIES IN 5 WORKING DAYS. CONTRACTOR MUST SCHEDULE APPROPRIATELY TO ALLOW HOC TO COMPLETE UTILITY MARKING PRIOR TO CONTRACTOR BEGINNING EXCAVATION OR TRENCHING.
.

13. CONTRACTOR MUST COORDINATE THE REMOVAL AND INSTALLATION OF UTILITY SERVICES WITH SUBCONTRACTORS AND CONTRACTING OFFICER IN ORDER TO MINIMIZE THE DISRUPTION TO ADJACENT FACILITIES.

14. CONTRACTOR IS CAUTIONED THAT THE WORK WILL BE IN AREAS OF UTILITY CONGESTION, INCLUDING, BUT NOT LIMITED TO: WATER, SANITARY SEWER, STORM SEWER, COMMUNICATIONS, AND ELECTRICAL. UTILITIES DAMAGED BY CONTRACTOR MUST BE REPAIRED AT NO ADDITIONAL EXPENSE TO THE GOVERNMENT.THE CONTRACTOR MUST REPORT ANY UTILITY CONFLICTS TO THE CONTRACTING OFFICER

15. CONTRACTOR MUST LOCATE UTILITIES IN ACCORDANCE WITH ASCE/UESI/CI 38-22 “STANDARD GUIDELINE FOR INVESTIGATING AND DOCUMENTING EXISTING UTILITIES”. THE CONTRACTOR MUST COMPLETE A UTILITY QUALITY LEVEL “A” SURVEY. THE CONTRACTOR MUST REPORT ANY CONFLICT TO THE CONTRACTING OFFICER.

16. CONTRACTOR MAY ENCOUNTER GROUND WATER DURING EXCAVATION AND TRENCHING OPERATIONS, AND MUST DEWATER AS REQUIRED FOR PROPER CONSTRUCTION OF STRUCTURES OR UTILITIES. CONTRACTOR MUST DISPOSE OF GROUNDWATER IN ACCORDANCE WITH WITH ALL FEDERAL, STATE, AND LOCAL REQUIREMENTS AND IN A MANNER APPROVED BY THE CONTRACTING OFFICER.

17. CONSTRUCTION ACTIVITY DEWATERING WATER IS EXPECTED TO BE RETAINED ON SITE OR DISPOSED OF OFF SITE. IF THE CONTRACTOR ELECTS TO DISCHARGE TO STORM DRAIN, CONTRACTOR SHALL PROCURE THE APPLICABLE NPDES PERMIT (APPENDIX G) AT NO ADDITIONAL COST TO THE GOVERNMENT.

18. CONTRACTOR MUST COMPLY WITH APPLICABLE SPECIFICATION SECTIONS FOR ACCESS, SAFETY, AND MAINTENANCE OF HAUL ROUTES. (SEE TEMPORARY CONSTRUCTION FACILITIES AND CONTROL SPECIFICATIONS SECTION 01 50 00).

19. UNLESS INDICATED OTHERWISE, BORROW SITES ARE NOT AVAILABLE ON THE BASE.

20. UNLESS INDICATED OTHERWISE, DISPOSAL AREAS FOR RUBBLE AND EXCESS SOIL MATERIALS ARE NOT AVAILABLE ON BASE. DISPOSAL MUST BE PROVIDED BY CONTRACTOR AT LAWFUL SITES OFF GOVERNMENT CONTROLLED LANDS. REMOVAL OF DIRT AND/OR CONSTRUCTION DEBRIS REQUIRES APPROVAL BY THE CONTRACTING OFFICER AND THE 15TH CEVQ.

21. CONTRACTOR MUST STOP WORK IMMEDIATELY AND CONTACT THEIR INSPECTION REPRESENTATIVE IF A UTILITY LINE IS DISTURBED.

22. CONTRACTOR MUST KEEP ALL PUBLIC ROADS AND STREETS CLEAN OF CONSTRUCTION DEBRIS, MUD, ETC. AT ALL TIMES. CONTRACTOR MUST USE A WET VACUUM STREET SWEEPER TO CLEAN STREETS, TAXIWAYS, AND TAXILANES AT LEAST TWICE PER DAY OR AS DIRECTED BY CONTRACTING OFFICER. CONTRACTOR MUST PROVIDE EQUIPMENT AND PERSONNEL TO CLEAN ANY STREETS AS REQUESTED BY THE CONTRACTING OFFICER. CONTRACTOR IS RESPONSIBLE FOR ALL REPAIRS TO STREETS, PARKING AREAS, AND BASE OR GOVERNMENT PROPERTY DAMAGED BY ITS CONSTRUCTION ACTIVITIES.

ENVIRONMENTAL NOTES:

1. ENVIRONMENTAL PROTECTION

   1.1. PROTECT THE ENVIRONMENTAL RESOURCES DURING THE ENTIRE DURATION OF THE CONTRACT. COMPLY WITH FEDERAL, STATE AND LOCAL REGULATIONS PERTAINING TO ENVIRONMENTAL PROTECTION, INCLUDING WATER, AIR, SOLID WASTE, HAZARDOUS WASTE AND SUBSTANCES, SILICA, OILY SUBSTANCES, AND NOISE POLLUTION.

   1.2. COMPLY WITH ALL REQUIREMENTS SPECIFIED IN 01 57 19 TEMPORARY ENVIRONMENTAL CONTROLS AND 01 74 19 CONSTRUCTION WASTE MANAGEMENT AND DISPOSAL.

   1.3. PREPARE AND SUBMIT ALL NECESSARY ENVIRONMENTAL PROTECTION, HAZARDOUS MATERIALS/CONTAMINATED SOIL ABATEMENT PLANS AS INDICATED IN THE SPECIFICATIONS TO THE CONTRACTING OFFICER FOR REVIEW AND APPROVAL BY THE GOVERNMENT.

   1.4. OBTAIN ALL NECESSARY CONSTRUCTION AND ENVIRONMENTAL PERMITS (I.E. AIR PERMIT FOR GENERATOR, NPDES, ETC.). ONSITE CONSTRUCTION MUST NOT BEGIN UNTIL ALL PERMITS HAVE BEEN OBTAINED. DO NOT CONTACT THE REGULATORY AGENCIES WITHOUT PRIOR COORDINATION WITH THE GOVERNMENT ENVIRONMENTAL OFFICE VIA CONTRACTING OFFICER.

   1.5. SPILLS ARE PROHIBITED. PREPARE SPILL RESPONSE KITS. IF INADVERTENT SPILLS OCCUR, TAKE IMMEDIATE ACTIONS INCLUDING NOTIFICATION TO THE CONTRACTING OFFICER, NATIONAL RESPONSE CENTER, AND/OR STATE AGENCIES. THE CONTRACTOR IS RESPONSIBLE FOR THE SPILL CLEAN-UP AT NO COST TO THE GOVERNMENT.

2. CULTURAL AND NATURAL RESOURCES MANAGEMENT:

   2.1. THE PROPOSED PROJECT IS LOCATED IN AN AREA OF LOW POTENTIAL OF ENCOUNTERING ARCHAEOLOGICAL RESOURCES. SHOULD HUMAN REMAINS OR POSSIBLE ARCHAEOLOGICAL ARTIFACTS BE INADVERTENTLY DISCOVERED DURING THE PROJECT, ALL WORK IN THAT AREA SHALL STOP, AND THE CONTRACTING OFFICER WILL BE IMMEDIATELY NOTIFIED.

3. WASTE HANDLING AND DISPOSAL:

   3.1. TREATED WOOD UTILITY POLES WILL BE DEMOLISHED. THE WOODEN POLES MAY BE REUSED AS THE ORIGINAL PURPOSE. IF REUSING IS NOT FEASIBLE, THE WASTE SHALL BE DISPOSED OF AT A PERMITTED DISPOSAL FACILITY. CHIPPING OF TREATED WOOD MATERIALS TO USE THEM AS MULCH OR OTHER GROUND COVERS WILL NOT BE PERMITTED.

4. WORKER SAFETY

   4.1. PROVIDE HAZARD COMMUNICATION AND TRAINING TO THE WORKERS AND SUBCONTRACTORS. SITE WORKERS MUST BE INFORMED OF THE PRESENCE OF HAZARDOUS MATERIALS (LEAD, CADMIUM, AND CHROMIUM CONTAINING MATERIALS). ANTICIPATE SILICA HAZARDS FOR CONCRETE WORK.

   4.2. COMPLY WITH ALL APPLICABLE FEDERAL AND STATE HEALTH AND SAFETY REGULATIONS AND SECTION 01 35 26 GOVERNMENTAL SAFETY REQUIREMENTS. ALL WORK INVOLVING HAZARDOUS MATERIAL/WASTE, FUGITIVE DUST, AND SILICA MUST BE CONDUCTED IN A CONTROLLED MANNER PROTECTIVE OF THE WORKERS, BASE PERSONNEL, AND THE ENVIRONMENT.

   4.3. IF THE CONTRACTOR BRINGS HAZARDOUS MATERIALS OR CHEMICALS TO THE SITE, SUBMIT A LIST AND QUANTITIES OF HAZARDOUS MATERIALS AND SAFETY DATA SHEETS TO THE CONTRACTING OFFICER. DO NOT BRING HAZARDOUS MATERIAL OR CHEMICALS WITHOUT APPROVAL FROM THE CONTRACTING OFFICER. SAFETY DATA SHEETS ARE TO REMAIN ON SITE AFTER APPROVAL BY CONTRACTING OFFICER.

SECURITY NOTES:

1. THE CONTRACTOR IS REQUIRED TO HAVE WORK PLANS ACCEPTED BY CONTRACTING OFFICER FOR ALL RELATED ACTIVITIES PRIOR TO COMMENCING WITH ANY WORK ADDRESSED ON THESE DRAWINGS.

2. THE CONTRACTOR SHALL OBTAIN GOVERNMENT ACCEPTANCE OF APPROPRIATE DETAILED SCHEDULE(S) PRIOR TO COMMENCING WITH ANY WORK ADDRESSED ON THESE DRAWINGS.

3. THE CONTRACTOR WORK PLANS AND SCHEDULES SHALL PRIORITISE MINIMIZING THE AMOUNT OF TIME THAT TEMPORARY AND/OR UNDESIRABLE CONDITIONS ARE PRESENT.

4. CONTRACTOR WORK PLANS, MEANS AND METHODS SHALL MINIMIZE THE DEGREE TO WHICH TEMPORARY CONDITIONS VARY FROM STANDARDS.

5. THE CONTRACTOR SHALL TAKE ALL NECESSARY MEASURES, INCLUDING SHORING AND DEWATERING, TO PREVENT GROUNDWATER FROM ADVERSELY IMPACTING ITS WORK AND SURROUNDING IMPROVEMENTS.

MUNITIONS FACILITY ACCESS

1. THE CONTRACTOR SHALL MANAGE ITS WORK IN A MANNER THAT MINIMIZES DISRUPTION TO THE MUNITIONS FACILITY.

2. THE CONTRACTOR SHALL WORK CLOSELY WITH THE CONTRACTING OFFICER TO IMPLEMENT A PLAN FOR TEMPORARY BARRICADES WITHIN THE MUNITIONS FACILITY AS SHOWN IN THESE DRAWINGS.

3. THE CONTRACTOR SHALL WORK CLOSELY WITH THE CONTRACTING OFFICER TO IMPLEMENT A PLAN FOR PULLING BACK EQUIPMENT AND WORKERS IF NECESSARY BY MISSION REQUIREMENTS.

FENCE

1. FENCE AND GATE WORK SHALL PROCEED IN A MANNER THAT PROVIDES CONTINUOUS SECURITY FOR THE CONTRACT DURATION.

2. TEMPORARY FENCES AND GATES SHALL BE TIED TO EXISTING FENCES AND/OR EXISTING BUILDINGS PRIOR TO COMMENCING WITH ANY WORK ADDRESSED ON THESE DRAWINGS.

3. THE CONTRACTOR SHALL OBTAIN WRITTEN GOVERNMENT ACCEPTANCE OF TEMPORARY FENCES, GATES, AND RELATED SECURITY ITEMS PRIOR TO COMMENCING WITH ANY WORK ON THIS DRAWING.

4. CONTRACTOR PROVIDED LOCKS SHALL BE APPROVED BY THE BASE.

TITLES AND VIEW MARKERS

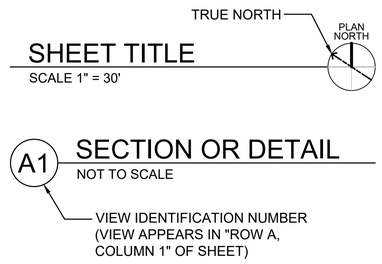

ABBREVIATIONS

A	AREA
AC	ASPHALT CONCRETE
AGG	AGGREGATE
BFP	BACKFLOW PREVENTER
BLDG	BUILDING
CLR	CLEAR
CMU	CONCRETE MASONRY UNIT
CONC	CONCRETE
CU FT	CUBIC FEET
DEG	DEGREE
DI	DRAIN INLET
DIA	DIAMETER
EG	EXISTING GRADE
ELEC	ELECTRICITY
ELEV	ELEVATION
EP	EDGE OF PAVEMENT
EQ SP	EQUALLY SPACED
EXIST	EXISTING
FFE	FINISHED FLOOR ELEVATION
FG	FINISHED GRADE
FH	FIRE HYDRANT
FOD	FOREIGN OBJECT DEBRIS
FT	FEET
GALV	GALVANIZED
IN	INCHES
INV	INVERT
IRRIG	IRRIGATION
LF	LINEAR FEET
MAX	MAXIMUM
ME	MATCH ELEVATION?
MIN	MINIMUM
O.C.	ON CENTER
PCC	PORTLAND CEMENT CONCRETE
PV	PHOTOVOLTAIC SOLAR PANEL
SMH	SEWER MANHOLE
SQ FT	SQUARE FEET
STA	STATION
TS	TOP OF STOOP
TYP	TYPICAL
WQ	WATER QUALITY
WV	WATER VALVE

US Army Corps of Engineers®

MARK	DESCRIPTION	DATE

DESIGNED BY: J. LOWE
DRAWN BY: T. CRIST
CHECKED BY: M. UNTEN
SUBMITTED BY:
SIZE: ANSI D
ISSUE DATE: OCT 15, 2025
SOLICITATION NO.: W9128A22F0002
CONTRACT NO.: W9128A19D0012

U.S. ARMY CORPS OF ENGINEERS
HONOLULU DISTRICT
FORT SHAFTER, HAWAII

COFFMAN ENGINEERS
745 FORT STREET, SUITE 400
HONOLULU, HAWAII 96813

JOINT BASE PEARL HARBOR-HICKAM, OAHU, HAWAII
FY22 HAWAII AIR NATIONAL GUARD (HIANG) F-22 PLUS UP
ADD EGRESS SHOP

CIVIL NOTES

SHEET ID
C-001

REVISED FINAL SUBMITTAL

EROSION PREVENTION / SEDIMENT CONTROL NOTES:

1. THE CONTRACTOR MUST FOLLOW THE GUIDELINES IN THE CITY AND COUNTY OF HONOLULU'S "RULES RELATING TO WATER QUALITY".

2. MEASURES TO CONTROL EROSION AND OTHER POLLUTANTS MUST BE IN PLACE BEFORE ANY EARTHWORK IS INITIATED.

3. REGULARLY INSPECT AND MAINTAIN ALL EROSION AND SEDIMENT CONTROLS TO ENSURE CONTINUED PERFORMANCE.

4. TEMPORARY STABILIZATION

   TEMPORARY STABILIZATION TEMPORARY STABILIZATION IS REQUIRED ON DISTURBED AREAS WHICH ARE AT FINAL GRADE OR WHEN THE DISTURBED AREA WILL NOT BE WORKED FOR 14 CONSECUTIVE DAYS OR MORE.

5. PERMANENT STABILIZATION

   ALL DISTURBED AREAS MUST BE PERMANENTLY STABILIZED USING VEGETATIVE COVERING, PAVEMENT, OR EQUIVALENT, PRIOR TO REMOVING EROSION AND SEDIMENT MEASURES. TRAPPED SEDIMENT AND AREAS OF DISTURBED SOIL WHICH RESULT FROM THE REMOVAL OF THE TEMPORARY MEASURES MUST BE IMMEDIATELY AND PERMANENTLY STABILIZED.

6. PRESERVE EXISTING VEGETATION

   CLEARLY MARK THE AREAS TO BE PRESERVED WITH FLAGS OR TEMPORARY FENCING. WHERE TEMPORARY FENCING IS USED, FENCING MUST BE ADEQUATELY SUPPORTED BY POSTS AND MAINTAINED IN AN UPRIGHT POSITION.

7. MINIMIZE SOIL COMPACTION

   AREAS WHERE FINAL STABILIZATION OR INFILTRATION PRACTICES WILL BE INSTALLED MUST BE PROTECTED FROM EXCESSIVE COMPACTION DURING CONSTRUCTION. VEHICLE AND EQUIPMENT USE MUST BE RESTRICTED OR TECHNIQUES TO CONDITION THE SOILS SUPPORT VEGETATION MUST BE IMPLEMENTED IN THE AREAS THAT HAVE BEEN COMPACTED AND ARE DESIGNATED TO REMAIN VEGETATIVE OR POST-CONSTRUCTION INFILTRATION AREAS. CLEARLY MARK THE AREAS TO BE AVOIDED WITH FLAGS OR TEMPORARY FENCING. WHERE TEMPORARY FENCING IS USED, FENCING MUST BE ADEQUATELY SUPPORTED BY POSTS AND MAINTAINED IN AN UPRIGHT POSITION.

8. PERIMETER CONTROLS

   PERIMETER CONTROLS ARE REQUIRED DOWNSLOPE OF ALL DISTURBED AREAS. MAINTAIN DOWNSTREAM VEGETATED BUFFER AREA.

9. INLET PROTECTION

   9.1. ALL STORM DRAIN INLETS ONSITE AND THOSE OFFSITE WHICH MAY RECEIVE RUNOFF FROM THE SITE MUST USE AN INLET PROTECTION DEVICE UNLESS THEY ARE DIRECTED TO A SEDIMENT BASIN.

   9.2. SEDIMENT LEVELS MAY NOT EXCEED ONE THIRD OF THE HEIGHT OF A SEDIMENT BARRIER OR INLET PROTECTION DEVICE AT ANY POINT ALONG THE LENGTH OF THE SEDIMENT BARRIER OR THE INLET PROTECTION DEVICE.

   9.3. SEDIMENT BARRIERS AND INLET PROTECTION DEVICES MUST BE UNCLOGGED AND CLEANED WHEN PERFORMANCE IS COMPROMISED. TORN, WEATHERED OR SAGGING SEDIMENT BARRIERS OR INLET PROTECTION DEVICES MUST BE REPAIRED OR REPLACED IMMEDIATELY.

10. TRACKING CONTROL

   10.1. MINIMIZE SEDIMENT TRACK-OUT ONTO OFF-SITE STREETS, OTHER PAVED AREAS, AND SIDEWALKS FROM VEHICLES EXITING THE CONSTRUCTION SITE BY RESTRICTING VEHICLE TRAFFIC TO PROPERLY DESIGNATED AREAS AND USING ADDITIONAL CONTROLS TO REMOVE SEDIMENT FROM VEHICLE TIRES PRIOR TO EXITING THE SITE.

   10.2. VEHICULAR PARKING AND MOVEMENTS ON PROJECT SITES MUST BE CONFINED TO PAVED SURFACES OR PREDEFINED PARKING AREAS AND VEHICLE PATHS, WHICH MUST BE MARKED WITH FLAGS OR BOUNDARY FENCING.

   10.3. ALL POLLUTANTS AND MATERIALS THAT ARE DROPPED, WASHED, TRACKED, SPILLED, OR OTHERWISE DISCHARGED FROM A PROJECT SITE TO OFF-SITE STREETS, OTHER PAVED AREAS, SIDEWALKS OR THE MS4 MUST BE CLEANED USING DRY METHODS SUCH AS SWEEPING OR VACUUMING.

   10.4. WASHING POLLUTANTS AND MATERIALS THAT ARE DISCHARGED FROM THE PROJECT SITE TO THE MS4 INTO DRAIN INLETS OR CATCH BASINS IS PROHIBITED UNLESS THE MATERIAL IS SEDIMENT AND THE INLETS ARE DIRECTED TO A SEDIMENT BASIN OR SEDIMENT TRAP.

11. BEST MANAGEMENT PRACTICES (BMPS) MUST NOT BE REMOVED UNTIL FINAL STABILIZATION IS COMPLETE FOR THAT PHASE.

12. REFER TO CITY AND COUNTY OF HONOLULU BEST MANAGEMENT PRACTICES MANUAL-CONSTRUCTION, FOR MORE INFORMATION ON BMPS.

13. PRACTICE GOOD HOUSEKEEPING MEASURES THROUGHOUT THE DURATION OF CONSTRUCTION.

14. REGULARLY INSPECT AND MAINTAIN ALL EROSION AND SEDIMENT CONTROLS TO ENSURE CONTINUED PERFORMANCE.

15. INSPECTIONS WILL BE PERFORMED WEEKLY.

PROJECT SEQUENCE:

1. INSTALL CONSTRUCTION INGRESS /EGRESS, PERIMETER CONTROLS, BUFFER AND INLET PROTECTION, CLEARING AND GRUBBING AS NECESSARY FOR THE INSTALLATION OF THESE BMPS.

2. CLEAR, GRUB AND GRADE THE SITE, REFER TO SITE PLAN. RELOCATE, RECONSTRUCT AND MAINTAIN BMPS AS NEEDED TO KEEP THEM EFFECTIVE AT ALL TIMES. INITIATE TEMPORARY STABILIZATION IMMEDIATELY ONCE GRADING IS COMPLETED.

3. PROCEED WITH CONSTRUCTION WITH LEAST POSSIBLE DISTURBANCE OF VEGETATIVE AREAS AND TEMPORARY STRUCTURES.

4. REMOVE OR DISMANTLE TEMPORARY EROSION CONTROL STRUCTURES AFTER AT LEAST 90% ESTABLISHMENT OF PERMANENT COVER.

5. PRACTICE GOOD HOUSEKEEPING MEASURES THROUGHOUT THE DURATION OF CONSTRUCTION.

6. INSPECTIONS WILL BE PERFORMED WEEKLY.

RAIN RESPONSE PLAN:

THE FOLLOWING WILL BE PERFORMED WHEN RAIN IS IMMINENT OR IS FORECASTED IN THE NEXT 48 HOURS:

1. TEMPORARY SUSPENSION OF ACTIVE GRADING.

2. INSPECT ALL PERIMETER CONTROLS AND INLET PROTECTION DEVICES, AND MAINTAIN AS NEEDED. REINSTALL ANY PERIMETER CONTROLS THAT WERE REMOVED DUE TO ACTIVE WORK IN THE AREA. IF A SEVERE STORM IS EXPECTED, REMOVE INLET PROTECTION DEVICES TO PREVENT FLOODING ON SURROUNDING STREETS.

3. COVER OR RELOCATE MATERIAL STOCKPILES AND LIQUID MATERIAL CONTAINERS TO AVOID CONTACT WITH RAINWATER.

4. PLACE SPILL PANS OR OIL-ONLY SPILL PADS UNDER CONSTRUCTION VEHICLES TO PREVENT RUNOFF FROM CONTACTING ANY SPILLED PETROLEUM PRODUCTS. PROPERLY DISPOSE OF ANY ACCUMULATED OILY WATER AFTER THE RAIN EVENT.

5. RE-INSPECT AFTER THE RAIN EVENT AND REPLACE OR MAINTAIN BMPS AS NEEDED.

GOOD HOUSEKEEPING BMPS:

1. INSPECT BMPS AND SITE WEEKLY. MAINTAIN BMPS AND SITE AS REQUIRED TO ENSURE CONTINUED PERFORMANCE.

2. DUST CONTROL

   DUST FROM THE PROJECT SITE MUST NOT BE TRANSPORTED OR DISCHARGED TO OFF-SITE AREAS. WATERING MUST BE USED TO CONTROL DUST DURING THE GRADING PHASES. THE WORK MUST BE DONE IN CONFORMANCE WITH AIR POLLUTION CONTROL STANDARDS CONTAINED IN THE HAR TITLE 11, CHAPTER 60.1 "AIR POLLUTION CONTROL".

3. STREET SWEEPING AND VACUUMING

   ALL POLLUTANTS DISCHARGED FROM CONSTRUCTION SITE TO OFF-SITE AREAS MUST BE SWEPT OR VACUUMED EACH DAY BEFORE LEAVING THE JOB SITE.

4. MATERIALS DELIVERY, STORAGE AND USE MANAGEMENT

   PREVENT, REDUCE, OR ELIMINATE THE DISCHARGE OF POLLUTANTS FROM MATERIAL DELIVERY, STORAGE, AND USE TO THE STORM WATER SYSTEM OR WATERCOURSES BY MINIMIZING THE STORAGE OF HAZARDOUS MATERIALS ONSITE, STORING MATERIALS IN A DESIGNATED AREA, INSTALLING SECONDARY CONTAINMENT. CONSTRUCTION MATERIALS, WASTE, TOXIC AND HAZARDOUS SUBSTANCES, STOCKPILES AND OTHER SOURCES OF POLLUTION MUST NOT BE STORED IN BUFFER AREAS, NEAR AREAS OF CONCENTRATED FLOW, OR AREAS ABUTTING THE MS4, RECEIVING WATERS, OR DRAINAGE IMPROVEMENTS THAT DISCHARGE OFF-SITE. PRIMARY AND SECONDARY CONTAINMENT CONTROLS AND COVERS MUST BE IMPLEMENTED TO THE MEP.

5. SPILL PREVENTION AND CONTROL

   CREATE AND IMPLEMENT SPILL PREVENTION AND RESPONSE PLANS TO ELIMINATE AND MINIMIZE THE DISCHARGE OF POLLUTANTS TO THE MS4 AND RECEIVING WATERS FROM LEAKS AND SPILLS BY REDUCING THE CHANCE FOR SPILLS, ABSORBING, CONTAINING, AND CLEANING UP SPILLS AND PROPERLY DISPOSING OF SPILL MATERIALS. AT A MINIMUM, ALL PROJECTS MUST CLEANUP ALL LEAKS AND SPILLS IMMEDIATELY.

6. HAZARDOUS MATERIALS

   PREVENT OR REDUCE THE DISCHARGE OF POLLUTANTS TO STORM WATER FROM HAZARDOUS WASTE THROUGH PROPER MATERIAL USE AND WASTE DISPOSAL. IN THE EVENT THAT HAZARDOUS MATERIALS ARE DISCHARGED TO THE STORM SEWER SYSTEM, IMMEDIATELY NOTIFY THE CONTRACTING OFFICER REPRESENTATIVE (COR) OF THE DISCHARGE. A WRITTEN REPORT DESCRIBING THE POLLUTANTS THAT WERE DISCHARGED , THE REASONS FOR THE DISCHARGE, AND THE MEASURES THAT HAVE BEEN TAKEN OR WILL BE TAKEN TO PREVENT A REOCCURRENCE OF THE DISCHARGE SHALL BE SUBMITTED TO THE COR NO LESS THAN 3 DAYS AFTER NOTIFICATION.

7. NONHAZARDOUS MATERIALS

   IN THE EVENT THAT NONHAZARDOUS MATERIALS ARE DISCHARGED TO THE STORM SEWER SYSTEM, NOTIFIY THE COR NO LATER THAN THE NEXT BUSINESS DAY. A WRITTEN REPORT DESCRIBING THE POLLUTANTS THAT WERE DISCHARGED, THE REASONS FOR THE DISCHARGE AND THE MEASURES THAT HAVE BEEN TAKEN OR WILL BE TAKEN TO PREVENT A REOCCURRENCE OF THE DISCHARGE SHALL BE SUBMITTED TO THE COR NO LESS THAN 3 DAYS AFTER NOTIFICATION.

8. VEHICLE AND EQUIPMENT CLEANING

   ELIMINATE AND MINIMIZE THE DISCHARGE OF POLLUTANTS TO STORM WATER FROM VEHICLE AND EQUIPMENT CLEANING OPERATIONS BY USING OFF-SITE FACILITIES WHEN FEASIBLE, WASHING IN DESIGNATED, CONTAINED AREAS ONLY, AND ELIMINATING DISCHARGES TO THE STORM DRAIN SYSTEM BY EVAPORATING AND/OR TREATING WASH WATER, AS APPROPRIATE OR INFILTRATING WASH WATER FOR EXTERIOR CLEANING ACTIVITIES THAT USE WATER ONLY.

9. VEHICLE AND EQUIPMENT FUELING

   PREVENT FUEL SPILLS AND LEAKS BY USING OFF-SITE FACILITIES, FUELING ONLY IN DESIGNATED AREAS, ENCLOSING OR COVERING STORED FUEL, AND IMPLEMENTING SPILL CONTROLS SUCH AS SECONDARY CONTAINMENT AND ACTIVE MEASURES USING SPILL RESPONSE KITS.

10. VEHICLE AND EQUIPMENT MAINTENANCE

   ELIMINATE AND MINIMIZE THE DISCHARGE OF POLLUTANTS TO STORM WATER FROM VEHICLE AND EQUIPMENT MAINTENANCE OPERATIONS BY USING OFF-SITE FACILITIES WHEN FEASIBLE, PERFORMING WORK IN DESIGNATED AREAS ONLY, USING SPILL PADS UNDER VEHICLES AND EQUIPMENT, CHECKING FOR LEAKS AND SPILLS, AND CONTAINING AND CLEANING UP SPILLS IMMEDIATELY.

11. SOLID WASTE MANAGEMENT

   PREVENT OR REDUCE DISCHARGE OF POLLUTANTS TO THE LAND, GROUNDWATER, AND IN STORM WATER FROM SOLID WASTE OR CONSTRUCTION AND DEMOLITION WASTE BY PROVIDING DESIGNATED WASTE COLLECTION AREAS, COLLECT SITE TRASH DAILY, AND ENSURING THAT CONSTRUCTION WASTE IS COLLECTED, REMOVED, AND DISPOSED OF ONLY AT AUTHORIZED DISPOSAL AREAS.

12. SANITARY/SEPTIC WASTE MANAGEMENT

   TEMPORARY AND PORTABLE SANITARY AND SEPTIC WASTE SYSTEMS MUST BE MOUNTED OR STAKED IN, WELL-MAINTAINED AND SCHEDULED FOR REGULAR WASTE DISPOSAL AND SERVICING. SOURCES OF SANITARY AND/OR SEPTIC WASTE MUST NOT BE STORED NEAR THE MS4 OR RECEIVING WATERS.

13. STOCKPILE MANAGEMENT

   STOCKPILES MUST NOT BE LOCATED IN DRAINAGE WAYS, WITHIN 50 FEET FROM AREAS OF CONCENTRATED FLOWS, AND ARE NOT ALLOWED IN THE RIGHT-OF-WAY. SEDIMENT BARRIERS OR SILT FENCES MUST BE USED AROUND THE BASE OF ALL STOCKPILES. STOCKPILES MUST NOT EXCEED 15 FEET IN HEIGHT. STOCKPILES GREATER THAN 15 FEET IN HEIGHT MUST REQUIRE 8 FOOT WIDE BENCHING IN ACCORDANCE WITH ROH CHAPTER 14, ARTICLE 15. STOCKPILES MUST BE COVERED WITH PLASTIC SHEETING OR A COMPARABLE MATERIAL IF THEY WILL NOT BE ACTIVELY USED WITHIN 7 DAYS.

14. LIQUID WASTE MANAGEMENT

   LIQUID WASTE MUST BE CONTAINED IN A CONTROLLED AREA SUCH AS A HOLDING PIT, SEDIMENT BASIN, ROLL-OFF BIN, OR PORTABLE TANK OF SUFFICIENT VOLUME AND TO CONTAIN THE LIQUID WASTES GENERATED. CONTAINMENT AREAS OR DEVICES MUST BE IMPERMEABLE AND LEAK FREE AND SHOULD NOT BE LOCATED WHERE ACCIDENTAL RELEASE OF THE CONTAINED LIQUID CAN DISCHARGE TO WATER BODIES, CHANNELS, OR STORM DRAINS.

15. CONCRETE WASTE MANAGEMENT

   PREVENT OR REDUCE THE DISCHARGE OF POLLUTANTS TO STORM WATER FROM CONCRETE WASTE BY CONDUCTING WASHOUT OFFSITE OR PERFORMING ONSITE WASHOUT IN A DESIGNATED AREA CONSTRUCTED AND MAINTAINED IN SUFFICIENT QUANTITY AND SIZE TO CONTAIN ALL LIQUID AND CONCRETE WASTE GENERATED BY WASHOUT OPERATIONS. PLASTIC LINING MATERIAL SHOULD BE A MINIMUM OF 10 MILLIMETER POLYETHYLENE SHEETING AND SHOULD BE FREE OF HOLES, TEARS, OR OTHER DEFECTS THAT COMPROMISE THE IMPERMEABILITY OF THE MATERIAL. CONTAINMENT AREAS OR DEVICES SHOULD NOT BE LOCATED WHERE ACCIDENTAL RELEASE OF THE CONTAINED LIQUID CAN DISCHARGE TO WATER BODIES, CHANNELS, OR STORM DRAINS. WASHOUT FACILITIES MUST BE CLEANED, OR NEW FACILITIES MUST BE CONSTRUCTED AND READY FOR USE ONCE THE WASHOUT IS 75 PERCENT FULL. ONCE CONCRETE WASTES ARE WASHED INTO THE DESIGNATED AREA AND ALLOWED TO HARDEN, THE CONCRETE SHOULD BE BROKEN UP, REMOVED, AND DISPOSED OF AS SOLID WASTES.

16. CONTAMINATED SOIL MANAGEMENT

   AT MINIMUM CONTAIN CONTAMINATED MATERIAL SOIL BY SURROUNDING WITH IMPERMEABLE LINED BERMS AND COVERING EXPOSED CONTAMINATED MATERIAL WITH PLASTIC SHEETING. CONTAMINATED SOIL SHOULD BE DISPOSED OF PROPERLY IN ACCORDANCE WITH ALL APPLICABLE REGULATIONS.

17. STABILIZED CONSTRUCTION ENTRANCE AND EXIT

   A STABILIZED CONSTRUCTION ENTRANCE AND EXIT MUST BE PROVIDED BASED ON EROSION AND SEDIMENT CONTROL PLAN DETAILS, AND MUST BE REGULARLY INSPECTED/MAINTAINED TO ENSURE CONTINUED PERFORMANCE.

18. DEWATERING OPERATIONS

   DEWATERING OPERATIONS ARE PRACTICES THAT MANAGE THE DISCHARGE OF POLLUTANTS WHEN NON-STORM WATER AND ACCUMULATED PRECIPITATION MUST BE REMOVED FROM A WORK LOCATION SO THAT CONSTRUCTION WORK MAY BE ACCOMPLISHED AND MAY INCLUDE SEDIMENT BASINS, SEDIMENT TRAPS, WEIR TANKS, DEWATERING TANKS, FILTRATION SYSTEMS, OR OTHER MANUFACTURED SYSTEMS. DEWATERING NON-STORM WATER CANNOT BE DISCHARGED FROM THE SITE WITHOUT PRIOR NOTICE TO AND APPROVAL FROM THE DOH

19. CONTRACTOR MUST MAINTAIN BEST MANAGEMENT PRACTICES DURING THE PROPOSED WORK.

NPDES PERMIT NOTES:

1. AN NPDES PERMIT FOR STORM WATER DISCHARGES ASSOCIATED WITH CONSTRUCTION ACTIVITIES, PER HAR 11-55 APPENDIX C SHALL BE OBTAINED FOR THIS PROJECT BY THE CONTRACTOR.

2. A SPECIFIC INDIVIDUAL SHALL BE DESIGNATED TO BE RESPONSIBLE FOR EROSION AND SEDIMENT CONTROLS ON THE PROJECT SITE.

3. ALL EROSION CONTROL MEASURES SHALL BE CHECKED AND REPAIRED AS NECESSARY, FOR EXAMPLE WEEKLY IN DRY PERIODS AND WITHIN 24-HOURS AFTER MY RAINFALL OF 0.25 INCHES OR GREATER WITHIN A 24-HOUR PERIOD. DURING PROLONGED RAINFALL, DAILY CHECKING IS NECESSARY. THE CONTRACTOR SHALL MAINTAIN RECORDS OF CHECKS AND REPAIRS.

4. FOR ADDITIONAL EROSION CONTROL AND BEST MANAGEMENT PRACTICE REQUIREMENTS, REFER TO THE PROJECT'S NPDES PERMIT AND SWPPP.

5. THE CONTRACTOR AND SUBCONTRACTOR SHALL BE TRAINED ON THE NPDES BEST MANAGEMENT PRACTICES.

US Army Corps of Engineers®

MARK	DESCRIPTION	DATE

DESIGNED BY: J. LOWE
DRAWN BY: T. CRIST
CHECKED BY: M. UNTEN
SUBMITTED BY:
SIZE: ANSI D
ISSUE DATE: OCT 15, 2025
SOLICITATION NO.: W9128A22F0002
CONTRACT NO.: W9128A19D0012

U.S. ARMY CORPS OF ENGINEERS
HONOLULU DISTRICT
FORT SHAFTER, HAWAII

COFFMAN ENGINEERS
745 FORT STREET, SUITE 400
HONOLULU, HAWAII 96813

JOINT BASE PEARL HARBOR-HICKAM, OAHU, HAWAII
FY22 HAWAII AIR NATIONAL GUARD (HIANG) F-22 PLUS UP
ADD EGRESS SHOP

EROSION AND SEDIMENT CONTROL NOTES

SHEET ID
C-002

REVISED FINAL SUBMITTAL

WATER NOTES:

1. THE NAVFAC HAWAII WATER UTILITIES BRANCH (CODE OPC61, PHONE NO. 473-0037) MUST BE INFORMED 60 DAYS IN ADVANCE OF ANY WORK ON THE NAVY'S WATER LINE.

2. THE CONTRACTOR MUST NOTIFY THE NAVFAC HAWAII WATER UTILITIES BRANCH IN WRITING ANY REQUEST FOR WATER OUTAGE AT LEAST 30 CALENDAR DAYS PRIOR TO THE PLANNED SUCH REQUEST MUST BE SUBJECT TO THE APPROVAL OF THE NAVY. THE CONTRACTOR MUST ALSO NOTIFY THE NAVFAC HAWAII WATER UTILITIES BRANCH (CODE 652, PHONE 473-0037) 3 DAYS IN ADVANCE OF CONNECTIONS INTO THE EXISTING WATER SYSTEM AND PRIOR TO PERFORMING ANY TESTS ON THE NEW NAVY LINE.

3. WATER OUTAGES MUST BE LIMITED TO A 1-DAY DURATION. CONTRACTOR MUST ENSURE ADEQUATE THRUST RESTRAINT AT FITTINGS THROUGH USE OF STRUCTURAL STRUTS, SATISFACTORILY CURED CONCRETE THRUST BLOCKS, OR OTHER MEANS PRIOR TO RESUMING SERVICE. CONTRACTOR MUST HAVE ALL MATERIALS ON HAND FOR THE CONNECTION PRIOR TO THE OUTAGE PERIOD.

4. OUTAGES ON AND TAPS TO THE EXISTING NAVY LINE WILL NOT BE GRANTED UNTIL THE NEW LINE HAS BEEN CONSTRUCTED, TESTED, AND DISINFECTED, WITH LETTER REQUEST FOR SHUT-DOWN PROVIDED IN ADVANCE TO NAVFAC HAWAII WATER UTILITIES BRANCH (CODE PW652, PHONE NO. 473-0037). BOTH DISINFECTION AND HYDROTEST RESULTS MUST BE SUBMITTED TO NAVFAC HAWAII WATER UTILITIES AT LEAST 24 HOURS IN ADVANCE OF THE TAP OR TIE-IN TO THE EXISTING NAVY WATER SYSTEM.

5. OUTAGES AND TAPS ON THE EXISTING NAVY WATER SYSTEM WILL BE DONE ONLY BY NAVY PW652 PERSONNEL. THE WORK WILL BE DONE ON A COST REIMBURSABLE BASIS. THE GENERAL CONTRACTOR WILL SET UP AN ACCOUNT WITH THE NAVFAC HI COMPTROLLER'S OFFICE (PHONE 471-1587).

6. THE CONTRACTOR MUST TONE TO DETERMINE THE EXACT LOCATION OF THE NAVY LINE PRIOR TO PERFORMING EXCAVATION WORK IN THE AREA.

7. RECORD DRAWINGS OF WATER LINE MUST BE PROVIDED TO NAVFAC HAWAII; ONE COPY TO CODE CI41 (PHONE NO. 474-2253), AND ONE (1) COPY TO CODE PW652 (PHONE NO. 473-0037).

8. EXISTING UNDERGROUND UTILITY LINES. PLANS AND SPECIFICATIONS SHALL REQUIRE LOCATING AND MARKING FOR UNDERGROUND UTILITIES. SCAN THE CONSTRUCTION SITE WITH GROUND PENETRATING RADAR (GPR), ELECTOMAGNETIC, OR SONIC EQUIPMENT , AND MARK THE SURFACE OF THE GROUND PRIOR TO COMMENCEMENT OF ANY EXCAVATION WORK. IN AREAS WHERE NONMETALLIC PIPE LINES MAY BE PRESENT, ULTRASONIC DETECTION METHODS OR FIELD-LOCATING GRADE NODES (MANHOLES, VALVE BOXES, CLEANOUTS, ETC.) MAY BE USED AS APPROPRIATE. RESEARCH AS-BUILT CONSTRUCTION DRAWINGS AND PERFORM FIELD INVESTIGATIONS TO ENSURE ALL KNOWN UNDERGROUND UTILITY LINES ARE IDENTIFIED ON THE CONSTRUCTION DRAWINGS PRIOR TO ACTUAL FIELD EXCAVATIONS.

9. THE CONTRACTOR SHALL REQUEST WATER OUTAGES IN WRITING, VIA THE CONTRACTING OFFICER, FIFTEEN (15) DAYS PRIOR TO THE DESIRED DATE OF THE OUTAGE. THE C0NTRACTOR SHALL ENSURE THE APPROPRIATE NAVFAC HAWAII IPT FACILITY MANAGER NOTIFIES PERSONNEL LOCATED IN BUILDINGS AFFECTED BY THE OUTAGE UPON APPROVAL OF THE OUTAGE BY NAVFAC HI OPHP611 AND THE CONTRACTING OFFICER. ALL WATER OUTAGES SHALL BE PERFORMED BY NAVFAC HI OPHP611, UNLESS OTHERWISE DIRECTED BY THE CONTRACTING OFFICER.

10. COORDINATE THE WATER OUTAGE DURATION WITH NAVFAC HI OPHP611. WATER OUTAGES AFFECTING AN INDIVIDUAL FACILITY SHOULD NOT EXCEED FOUR (4) HOURS. PROVIDE TEMPORARY WATER SERVICE TO AFFECTED FACILITIES WHEN WATER OUTAGES EXCEED FOUR (4) HOURS, UNLESS THE OUTAGE DURATION OCCURS AFTER NORMAL WORKING HOURS AND/OR IS OTHERWISE APPROVED BY THE FACILITY MANAGER AND THE NAVFAC HAWAII FIRE PROTECTION ENGINEER.

11. THE CONTRACTOR SHALL PROVIDE THE CONTRACTING OFFICER AND NAVFAC HI OPHP611 FOURTEEN (14) DAYS NOTICE PRIOR TO CONNECTING TO ANY WATERLINE. REFER TO NAVFAC PW6-600-01 FOR PUBLIC WORKS UTILITY CRITERIA.

12. THE CONTRACTOR SHALL BE RESPONSIBLE FOR THE FOLLOWING:

    12.1. MATERIAL, LABOR AND EQUIPMENT -EXCEPT AS OTHERWISE INDICATED, THE CONTRACTOR SHALL PROVIDE ALL MATERIAL, LABOR AND EQUIPMENT TO CONNECT NEW EXTERIOR WATER LINES TO THE EXISTING NAVFAC HI OPHP611 WATER DISTRIBUTION SYSTEMS BY USE OF TAPPING SLEEVES AND TAPPING VALVES OR CORPORATION STOPS.

    12.2. TIMING -THE CONTRACTOR SHALL PERFORM THE DISINFECTION WORK AT THE CONNECTION JUST PRIOR TO INSTALLATION OF THE TAPPING MACHINE BY THE GOVERNMENT. THE DISINFECTION WORK SHALL BE PERFORMED IN THE PRESENCE OF NAVFAC HI OPHP611 PERSONNEL

    12.3. COORDINATION AND NOTIFICATION - THE CONTRACTOR SHALL COORDINATE WORK WITH NAVFAC HL OPHP611. THE CONTRACTOR SHALL PROVIDE NAVFAC HI OPHP611 A MINIMUM OF (14) DAYS ADVANCE NOTICE PRIOR TO THE DATE OF THE TAP. POINT OF CONTACT ON THIS MATTER IS NAVFAC HI OPHP611, TELEPHONE NUMBER 473-2557.

    12.4. PAYMENT OF GOVERNMENT SERVICES - W0RK BY NAVFAC HI OPHP611 ON NAVFAC HI OPHP611 PROJECTS SHALL BE DONE ON A COST REIMBURSABLE BASIS. ALL CONTRACTS REQUIRING TAPPING OF EXISTING NAVFAC HAWAII PW EXTERIOR WATER LINES SHALL REFLECT THIS REIMBURSEMENT REQUIREMENT.

13. THE GOVERNMENT WILL PROVIDE, INSTALL AND OPERATE THE TAPPING MACHINE. THE EQUIPMENT NECESSARY FOR THE INSTALLATION AND OPERATION OF THE TAPPING MACHINE AS WELL AS THE NECESSARY CUTTING BLADES WILL ALSO BE PROVIDED BY THE GOVERNMENT. DISINFECTION OF THE TAPPING MACHINE WILL BE ONE BY THE GOVERNMENT. ALL OTHER WORK NOT SPECIFICALLY INDICATED AS BEING PERFORMED GOVERNMENT SHALL BE DONE BY THE CONTRACTOR.

14. TAPPING SLEEVE AND VALVE MATERIALS. TAPPING SLEEVES SHALL BE EITHER CAST OR DUCTILE IRON WITH MECHANICAL JOINT ENDS, UNLESS OTHERWISE APPROVED BY NAVFAC HI OPHP611. ALL TAPPING SLEEVES AND TAPPING VALVES SHALL BE A MATCHED SET AND CONFORM TO ASTM A536 GRADE 65-45-12. THE TAPPING VALVE SHALL BE FLANGED BY MECHANICAL JOINT FOR CONNECTING TO THE TAPPING MACHINE.

15. CONTRACTOR SUBMITTALS SHALL BE FORWARDED TO NAVFAC HI OPHP611, VIA THE CONTRACTING OFFICER, FOR REVIEW AND APPROVAL AS APPLICABLE.

16. THREE (3) COPIES OF SHOP DRAWINGS SHALL BE PROVIDED TO NAVFAC HI OPHP611 FOR REVIEW AND APPROVAL AS APPLICABLE AND/OR FOR RECORD PURPOSES.

17. ADEQUATE CLEARANCE BETWEEN THE EDGE OF A BUILDING (WALL AND ROOF LINE) AND A WATERLINE SHOULD BE PROVIDED TO ENABLE REPAIR OF THE LINES BY USE OF HEAVY EQUIPMENT. 3 FEET HORIZONTAL CLEARANCE SHALL BE PROVIDED BETWEEN WATERLINES AND OTHER UTILITIES (EXCEPT SEWER LINES). VERTICAL CLEARANCES SHALL BE A MINIMUM OF 6". WHENEVER CONCRETE JACKETS ARE INVOLVED, THE CLEARANCES SHALL BE THE TOTAL CLEAR DISTANCE BETWEEN THE CONCRETE JACKET AND THE UTILITY LINE.

18. A HORIZONTAL CLEARANCE OF 10 FEET SHALL BE PROVIDED BETWEEN WATER LINES AND SEWER LINES OR MANHOLES. IF THIS CLEARANCE CANNOT BE PROVIDED BECAUSE OF SITE CONDITIONS, THE WATERLINE MAY BE LAID CLOSER THAN 10 FEET, PROVIDED THAT THERE IS AT LEAST 3 FEET CLEARANCE BETWEEN THE LINES AND THE FOLLOWING REQUIREMENTS ARE MET:

    18.1. THE BOTTOM (INVERT) OF THE WATER PIPING SHALL BE AT LEAST 15 FEET ABOVE THE TOP (CROWN) OF THE SEWER PIPING. WHERE THIS VERTICAL SEPARATION CANNOT BE OBTAINED, THE SEWER PIPING SHALL BE CONSTRUCTED OF AWWA--APPROVED WATER PIPE AND PRESSURE TESTED IN PLACE WITHOUT LEAKAGE PRIOR TO BACKFILLING.

    18.2. THE SEWER MANHOLE SHALL BE OF WATERTIGHT CONSTRUCTION AND TESTED IN PLACE.

19. WATER PIPING SHALL CROSS ABOVE SEWER PIPING AND SHALL BE LAID TO PROVIDE A SEPARATION OF AT LEAST 1.5 FEET BETWEEN THE BOTTOM OF THE WATER PIPING AND THE TOP OF THE SEWER PIPING. IF THIS PROVISION CANNOT BE OBTAINED BECAUSE OF SITE CONDITIONS, THE FOLLOWING REQUIREMENTS SHALL BE MET:

    19.1. IF THE WATERLINE CROSSES ABOVE THE SEWER LINE, PROVIDE A CONCRETE JACKET FOR THE SEWER LINE A HORIZONTAL DISTANCE OF 3 FEET ON BOTH SIDES OF THE CROSSING.

    19.2. IF THE WATERLINE CROSSES BELOW THE SEWER LINE, PROVIDE A CONCRETE JACKET FOR THE SEWER LINE A HORIZONTAL DISTANCE OF 15 FEET ON BOTH SIDES OF THE CROSSING, PROVIDE ADEQUATE STRUCTURAL SUPPORT FOR THE SEWER PIPING TO PREVENT EXCESSIVE DEFLECTION OF THE JOINTS AND SETTLING ON AND BREAKING OF THE WATER PIPING. THE LENGTH OF THE WATER PIPING AT THE CROSSING SHALL BE A MINIMUM OF 20 FEET AND SHALL BE CENTERED AT THE POINT OF THE CROSSING SO THAT THE JOINTS SHALL BE EQUIDISTANT AND AS FAR AS POSSIBLE FROM THE SEWER PIPING.

    19.3. NO WATER PIPING SHALL PASS THROUGH OR COME IN CONTACT WITH ANY PART OF A SEWER MANHOLE.

20. THE MINIMUM COVER FOR TRANSMISSION MAINS SHALL BE 3 FEET. THE MINIMUM COVER FOR WATER LATERALS 2.5 INCHES AND SMALLER SHALL BE 30 INCHES IN PAVED AREAS, AND 2 FEET IN NON--PAVED AREAS. THE MAXIMUM COVER OVER WATERLINES SHALL BE 8 FEET.

21. PROVIDE REINFORCED CONCRETE PIPE JACKETS WHERE MINIMUM PIPE COVER IS NOT AVAILABLE, AND WHERE MINIMUM VERTICAL CLEARANCES BETWEEN SEWER AND WATER LINES CANNOT BE OBTAINED. WHEN CONCRETE JACKETS ARE PROVIDED, THEY SHALL BE PROVIDED WITH REINFORCEMENT. ALL CONCRETE JACKETS SHALL START AND END AT A PIPE JOINT AND THE JACKET SHALL BE PLACED IN A MANNER THAT WILL ALLOW THE AFOREMENTIONED JOINTS TO DEFLECT.

22. INSTALL WARNING AND IDENTIFICATION TAPE FOR ALL WATERLINES. TRACER WIRE SHALL BE PROVIDED FOR ALL NON-METALLIC PIPES. AT WATER VALVE BUFFALO BOXES, THE TRACER WIRE SHALL BE CUT AND BOTH ENDS SHALL EXTEND TO WITHIN 6 INCHES FROM THE TOP OF THE BOXES. AT WATER VALVE BOXES THE TRACER WIRE SHALL EXTEND INTO THE BOX

23. MAXIMUM DEFLECTION FOR PIPE JOINTS SHALL BE LIMITED TO 80% OF THE DEFLECTION RECOMMENDED BY THE MANUFACTURER

24. PROVIDE DUCTILE IRON PIPE AND FITTINGS. OTHER MATERIALS MAY BE INSTALLED ONLY WITH PRIOR APPROVAL BY NAVFAC HI OPH611.

25. DUCTILE IRON PIPE AND FITTINGS SHALL CONFORM TO AWWA C151. 4 INCH DIAMETER MAINS SHALL BE THICKNESS CLASS 53 (MIN.). MAINS 6 INCH IN DIAMETER AND LARGER SHALL BE THICKNESS CLASS 52 (MIN.). FLANGED PIPE SHALL CONFORM TO AWWA C115, AND FLANGED FITTINGS SHALL CONFORM TO AWWA C110 OR AWWA C153. PIPE AND FITTINGS SHALL HAVE CEMENT--MORTAR LINING CONFORMING TO AWWA C104, STANDARD THICKNESS. PROVIDE POLYETHYLENE ENCASEMENT ON LANDSIDE WATER LINE. WATER LINE UNDER PIERS SHALL HAVE EPOXY--POLYMIDE COATING.

26. ALL NEW OR REPAIRED POTABLE WATER LINES, FIRE PROTECTION LINES THAT ARE CONNECTED TO THE POTABLE WATER SYSTEM, IRRIGATION LINES THAT ARE UPSTREAM OF THE BACKFLOW PREVENTION DEVICES AND AFFECTED PORTIONS OF EXISTING POTABLE WATER LINES SHALL BE FLUSHED AND DISINFECTED. ALL WORK SHALL BE DONE AT THE C0NTRACTOR'S EXPENSE.

    26.1. DISINFECTION OF WATER LINES, INCLUDING FLUSHING AND BACTERIOLOGICAL TESTING, SHALL BE IN ACCORDANCE WITH AWWA C651 (LATEST EDITION) EXCEPT AS OTHERWISE INDICATED BEL0W.

    26.2. ALL CONNECTIONS TO EXISTING WATER LINES SHALL BE DONE IN THE "DRY". WHEN THE EXISTING WATER LINE HAS TO BE DEWATERED, THE CONTRACTOR SHALL ACCOMPLISH THE DEWATERING OF THE LINE IN A MANNER SUCH THAT THE CONNECTION TO THE EXISTING SYSTEM CAN BE DONE IN THE "DRY". THE CONTRACTOR SHALL SUBMIT A DEWATERING PLAN FOR APPROVAL WHEN DEWATERING IS REQUIRED.

    26.3. FOR NEW PIPE SECTIONS, CHLORINE SHALL BE APPLIED BY THE CONTINUOUS FEED METHOD UNLESS PRIOR APPROVAL HAS BEEN OBTAINED TO USE A DIFFERENT METHOD. CALCIUM HYPOCHLORITE GRANULES SHALL BE PLACED IN NEW PIPE SECTIONS DURING CONSTRUCTION AS SPECIFIED IN AWWA C651.

    26.4. WHEN THE LINE IS CHLORINATED, WATER ENTERING THE LINE SHALL RECEIVE A DOSE OF CHLORINE FED AT A CONSTANT RATE SUCH THAT THE WATER WILL HAVE NOT LESS THAN 50 MG/L OF FREE CHLORINE.

    26.5. AT THE END OF A 24-HOUR PERIOD THE TREATED WATER SHALL HAVE A RESIDUAL OF NOT LESS THAN 25 MG/L FREE CHLORINE.

    26.6. DURING THE CHLORINATION PERIOD ALL VALVES AND HYDRANTS IN THE SECTION BEING TREATED SHALL BE OPERATED A SUFFICIENT NUMBER OF TIMES TO THOROUGHLY DISINFECT THE APPURTENANCES.

    26.7. ALL METERS SHALL BE DISINFECTED WITH THE WATER LINE EXCEPT WHEN OTHERWISE APPROVED BY THE CONTRACTING OFFICER.

    26.8. THE CONTRACTOR SHALL NOTIFY NAVFAC HI OPHP611 AT TELEPHONE NUMBER 473-2557 THREE (3) W0RKING DAYS PRIOR TO CONNECTING TO AN EXISTING NAVY WATER LINE OR DISINFECTING A NEW OR EXISTING LINE.

27. THE CONTRACTOR SHALL NOTIFY NAVFAC HI OPHP611 AT TELEPHONE NUMBER 473-2557 THREE (3) WORKING DAYS PRIOR TO CONNECTING TO AN EXISTING NAVY WATER LINE OR DISINFECTING A NEW OR EXISTING LINE. DISINFECTION PROCEDURES FOR REPAIRS/CONNECTION WORK SHALL BE AS INDICATED IN AWWA C651 UNDER THE PARAGRAPH TITLED "DISINFECTION PROCEDURES WHEN CUTTING INTO OR REPAIRING EXISTING MAINS" EXCEPT THAT 5% HYPOCHLORTE SOLUTION SHALL BE USED.

28. ALL TAPPING SLEEVES SHALL BE DISINFECTED AS FOLLOWS:

    28.1. THOROUGHLY CLEAN THE EXTERIOR SURFACE OF THE MAIN TO BE TAPPED, THE SURFACES OF THE TAPPING SLEEVE AND THE SURFACES OF THE TAPPING EQUIPMENT THAT WILL COME INTO CONTACT WITH THE WATER.

    28.2. THOROUGHLY SWAB THE MAIN, THE TAPPING SLEEVE AND THE TAPPING EQUIPMENT WITH 5% SODIUM HYPOCHLORLTE SOLUTION.

    28.3. ANY SURFACES THAT BECOME CONTAMINATED AFTER BEING DISINFECTED, SHALL BE RECLEANED AND RESWABBED AS INDICATED ABOVE.

29. AFTER FINAL FLUSHING AND PRIOR TO PLACING NEW LINES IN SERVICE, BACTERIOLOGICAL TESTS SHALL BE PERFORMED AS INDICATED IN AWWA C651 AND AS FOLLOWS:

    29.1. STANDARD CONDITIONS: AT LEAST ONE SAMPLE SHALL BE COLLECTED FROM THE END OF EACH NEW MAIN AND ONE FROM THE END OF EACH NEW BRANCH LINE. THE LOCATION OF THE ADDITIONAL SAMPLES SHALL BE DETERMINED BY THE CONTRACTOR AND APPROVED BY THE CONTRACTING OFFICER.

    29.2. SPECIAL CONDITIONS: IF DURING CONSTRUCTION, TRENCH WATER HAS ENTERED THE LINE OR IF IN THE OPINION OF THE CONTRACTING OFFICER EXCESSIVE QUANTITIES OF DIRT OR DEBRIS HAVE ENTERED THE LINE, SAMPLES SHALL BE TAKEN AT INTERVALS OF APPROXIMATELY 200 FEET AND SHALL BE IDENTIFIED BY LOCATION.

    29.3. DISINFECTION OF MAINS AND BRANCH LINES SHALL BE REPEATED UNTIL SAMPLES SHOW THE ABSENCE OF COLIFORM ORGANISMS.

    29.4. FINAL BACTERIOLOGICAL TEST RESULTS, THAT SHOW THE ABSENCE OF COLIFORM ORGANISMS, SHALL BE PROVIDED TO THE PWC UTILITIES DEPARTMENT REPRESENTATIVE AT THE FINAL INSPECTION OF THE PROJECT OR PRIOR TO PLACING THE LINE IN SERVICE WHICHEVER OCCURS FIRST. THE LOCATION WHERE THE BACTERIOLOGICAL SAMPLES WERE TAKEN SHALL BE IDENTIFIED.

    29.5. THE CONTRACTOR SHALL NOTIFY NAVFAC HI OPHP611 AT TELEPHONE NUMBER 473-2557 THREE (3) WORKING DAYS PRIOR TO CONNECTING TO AN EXISTING NAVY WATER LINE OR DISINFECTING A NEW OR EXISTING LINE.

30. ALL WATER SYSTEM WORK SHALL BE IN CONFORMANCE WITH PWC 600-01 PUBLIC WORKS UTILITIES CRITERIA FOR DESIGN AND CONSTRUCTION: ELECTRICAL, SEWER, AND WATER, APRIL 10, 2006.

WATER MAINS AND FIRE HYDRANTS

1. THE CONTRACTOR SHALL TEST KEY WATER VALVES AND FIRE HYDRANTS TO ENSURE PROPER OPERATION AND TO VERIFY EFFECTIVE ISOLATION OF WORK AREAS.

2. THE CONTRACTOR SHALL MANAGE ITS WORK IN A MANNER THAT WILL KEEP EACH EXISTING FIRE HYDRANT OPERATIONAL UNTIL ITS REPLACEMENT (NEW) HYDRANT IS TESTED AND ACCEPTED IF SO REQUIRED BY THE FIRE AUTHORITY.

3. WORK ON CONNECTIONS TO EXISTING MAINS SHALL BE CONTINUOUS UNTIL THE EXISTING SYSTEM CAN BE PUT BACK INTO SERVICE.

4. TO ENSURE NO INTERRUPTION TO THE WORK PROGRESS, THE CONTRACTOR SHALL HAVE ADDITIONAL KEY PARTS AND EQUIPMENT ON HAND DURING THE CONNECTION OF NEW LINES TO EXISTING.

5. THE CONTRACTOR SHALL MAINTAIN A CONTINUOUS FIRE WATCH DURING ANY PERIOD THAT ANY EXISTING HYDRANT(S) ARE OUT OF SERVICE IF SO REQUIRED BY THE FIRE AUTHORITY.

6. THE CONTRACTOR SHALL HAVE AN OPERATOR AND AT LEAST ONE WATER TRUCK, FILLED AND DEDICATED TO FIRE PROTECTION, DURING THE PERIOD THAT ANY EXISTING HYDRANT IS OUT OF SERVICE IF SO REQUIRED BY THE FIRE AUTHORITY.

7. THE CONTRACTOR'S SCHEDULE SHALL PRIORITIZE ADDING NEW HYDRANTS AS SOON AS PRACTICAL.

8. THE CONTRACTOR SHALL OBTAIN WRITTEN ACCEPTANCE OF WORK PLANS AND SCHEDULES BY THE FIRE DEPARTMENT HAVING JURISDICTION PRIOR TO ENGAGING IN ACTIVITIES THAT AFFECT WATER MAINS AND/OR FIRE HYDRANTS.

9. VALVES SHOWN ON THE DRAWINGS ARE BASED UPON THE G-1 WATER SYSTEM MAP PROVIDED BY THE 154TH AIRLIFT WING.

US Army Corps of Engineers®

MARK	DESCRIPTION	DATE

DESIGNED BY: J. LOWE
DRAWN BY: T. CRIST
CHECKED BY: M. UNTEN
SUBMITTED BY:
SIZE: ANSI-D
ISSUE DATE: OCT 15, 2025
SOLICITATION NO.: W9128A22F0002
CONTRACT NO.: W9128A19D0012

U.S. ARMY CORPS OF ENGINEERS
HONOLULU DISTRICT
FORT SHAFTER, HAWAII

COFFMAN ENGINEERS
745 FORT STREET, SUITE 400
HONOLULU, HAWAII 96813

JOINT BASE PEARL HARBOR-HICKAM, OAHU, HAWAII
FY22 HAWAII AIR NATIONAL GUARD (HIANG) F-22 PLUS UP
ADD EGRESS SHOP

UTILITY NOTES

SHEET ID
C-003

REVISED FINAL SUBMITTAL

SEWER NOTES:

1. THE CONTRACTOR MUST BE RESPONSIBLE FOR PERFORMING AND MAINTAINING ANY INCIDENTAL SEWAGE BYPASS PUMPING OR DIVERSION WORK THAT WILL BE REQUIRED TO ACCOMPLISH THE CONSTRUCTION WORK.

2. FOR ANY NEW CONCRETE SURFACE THAT WILL BE EXPOSED TO SEWAGE FLOW, THE CONTRACTOR MUST MAINTAIN SEWAGE BYPASS/DIVERSION OPERATIONS FOR THE DURATION OF THE SPECIFIED CURING TIME FOR THE CONCRETE.

3. THE CONTRACTOR MUST BE RESPONSIBLE FOR PROVIDING AND MAINTAINING TEMPORARY POWER AS NECESSARY TO MAINTAIN NORMAL LIFT STATION OPERATIONS.

4. THE CONTRACTOR MUST BE RESPONSIBLE FOR DAMAGE TO ANY GOVERNMENT UTILITY SYSTEM RESULTING FROM CONSTRUCTION OPERATIONS; ANY DAMAGE MUST BE REPORTED IMMEDIATELY TO THE CONTRACTING OFFICER OR APPROPRIATE GOVERNMENT REPRESENTATIVE.

5. THE CONTRACTOR WILL BE RESPONSIBLE FOR REGULATORY FINES OR PENALTIES THAT MAY BE IMPOSED BY ENVIRONMENTAL REGULATORY AGENCIES IN THE EVENT OF SEWAGE OVERFLOW OR SPILL RESULTING FROM CONSTRUCTION OPERATIONS.

6. THE CONTRACTOR MUST REIMBURSE THE GOVERNMENT FOR ANY EMERGENCY RESPONSE EFFORT THAT MAY BE REQUIRED BY GOVERNMENT FORCES TO MITIGATE THE ADVERSE EFFECTS OF ANY SEWAGE OVERFLOW OR SPILL RESULTING FROM THE CONTRACTOR'S OPERATIONS.

7. ANY SEWER MANHOLE TO BE ABANDONED MUST HAVE ITS CONE SECTION REMOVED AND DISPOSED OF, PIPE PENETRATIONS PLUGGED WITH "CLASS "C" CONCRETE" AND THE REMAINING RISER STRUCTURE BACKFILLED AND COMPACTED TO FINISH GRADE.

8. THE CONTRACTOR MUST ENSURE THAT LOOSE MATERIAL, TOOLS AND EQUIPMENT FROM CONSTRUCTION OPERATIONS ARE APPROPRIATELY REMOVED FROM THE SEWER COLLECTION SYSTEM. ANY DAMAGE TO DOWNSTREAM LIFT STATION EQUIPMENT RESULTING FROM NEGLIGENCE WILL BE ASSESSED TO THE CONTRACTOR.

9. ADJUST ALL MANHOLE FRAMES AND COVERS TO THE NEW FINISH GRADE AND ENSURE THE ADJUSTMENTS PREVENT SURFACE RUNOFF INFLOW. MARK ALL COVERS AS SEWER.

10. UPON COMPLETION OF THE SEWER CONSTRUCTION, MAKE ADVANCE ARRANGEMENTS (3 WORKING DAYS MINIMUM), THROUGH THE CONTRACTING OFFICER'S REPRESENTATIVE FOR FINAL ACCEPTANCE INSPECTION OF THE NEW SEWER CONSTRUCTION.

11. CONSTRUCTION DEWATERING INTO THE NAVY'S SEWER COLLECTION SYSTEM IS PROHIBITED.

12. THE CONTRACTOR SHALL NOT ALLOW ITS ACTIVITIES TO INTERRUPT SANITARY SEWER SERVICE TO ANY FACILITIES UNLESS THE BASE PROVIDES WRITTEN ACCEPTANCE OF A BRIEF OFF HOURS OUTAGE.

13. THE CONTRACTOR SHALL TAKE APPROPRIATE MEASURES TO PREVENT GROUND WATER FROM ENTERING THE SEWER SYSTEM. THESE MEASURES SHALL INCLUDE, BUT NOT BE LIMITED TO, PLUGGING LINES, DEWATERING EXCAVATIONS, AND TEMPORARILY RAISING MANHOLES.

14. THE CONTRACTOR SHALL TAKE APPROPRIATE MEASURES TO ENSURE THAT PIPES AND OTHER COMPONENTS DO NOT FLOAT DURING THE INSTALLATION PROCESS.

US Army Corps of Engineers®

MARK	DESCRIPTION	DATE

DESIGNED BY: J. LOWE
DRAWN BY: T. CRIST
CHECKED BY: M. UNTEN
SUBMITTED BY:
SIZE: ANSI D
ISSUE DATE: OCT 15, 2025
SOLICITATION NO.: W9128A22F0002
CONTRACT NO.: W9128A19D0012

U.S. ARMY CORPS OF ENGINEERS
HONOLULU DISTRICT
FORT SHAFTER, HAWAII

COFFMAN ENGINEERS
745 FORT STREET, SUITE 400
HONOLULU, HAWAII 96813

JOINT BASE PEARL HARBOR-HICKAM, OAHU, HAWAII
FY22 HAWAII AIR NATIONAL GUARD (HIANG) F-22 PLUS UP
ADD EGRESS SHOP

UTILITY NOTES

SHEET ID
C-004

REVISED FINAL SUBMITTAL

PHASING NOTES:

1. THE CONTRACTOR IS REQUIRED TO HAVE WORK PLANS ACCEPTED BY CONTRACTING OFFICER FOR ALL RELATED ACTIVITIES PRIOR TO COMMENCING WITH ANY WORK ADDRESSED ON THIS DRAWING.

2. THE CONTRACTOR SHALL OBTAIN GOVERNMENT ACCEPTANCE OF APPROPRIATE DETAILED SCHEDULE(S) PRIOR TO COMMENCING WITH ANY WORK ADDRESSED ON THIS DRAWING.

3. THE CONTRACTOR WORK PLANS AND SCHEDULES SHALL PRIORITIZE MINIMIZING THE AMOUNT OF TIME THAT TEMPORARY AND/OR UNDESIRABLE CONDITIONS ARE PRESENT.

4. CONTRACTOR WORK PLANS, MEANS AND METHODS SHALL MINIMIZE THE DEGREE TO WHICH TEMPORARY CONDITIONS VARY FROM STANDARDS.

5. THE CONTRACTOR SHALL TAKE ALL NECESSARY MEASURES, INCLUDING SHORING AND DEWATERING, TO PREVENT GROUNDWATER FROM ADVERSELY IMPACTING ITS WORK AND SURROUNDING IMPROVEMENTS.

TAXIWAY M AND F-22 CAPA ACCESS

1. THE CONTRACTOR SHALL MANAGE ITS WORK IN A MANNER THAT MINIMIZES DISRUPTION TO AIRCRAFT TRAFFIC ON T/W M TO THE F-22 CAPA.

2. REMOVING EXISTING SHOULDERS AND CONSTRUCTING TIE-INS TO EXISTING PAVEMENT SHALL BE CLOSELY COORDINATED WITH THE CONTRACTING OFFICER TO MINIMIZE DISRUPTION TO AIRCRAFT OPERATIONS.

3. THE MISSION AIRCRAFT FOR T/W M TRAFFIC IS THE F-22.

4. THE CONTRACTOR MAY PERFORM NIGHT PAVING TO REDUCE THE ADVERSELY INFLUENCE OF HOT WEATHER ON THE CONCRETE QUALITY DURING PCC PAVING.

5. T/W M SHALL REMAIN OPERATIONAL UNTIL THE NEW PCC PORTION OF THE APRON EDGE TAXILANE AND THE BY-PASS TAXILANE IS ACCEPTABLE TO THE CONTRACTING OFFICER AND READY FOR IMMEDIATE USE.

6. THE CONTRACTOR SHALL WORK CLOSELY WITH THE CONTRACTING OFFICER TO IMPLEMENT A PLAN FOR TEMPORARY BARRICADES, SIGNAGE, AND MARKINGS.

7. THE CONTRACTOR SHALL WORK CLOSELY WITH THE CONTRACTING OFFICER TO IMPLEMENT A PLAN FOR PULLING BACK EQUIPMENT AND WORKER IF NECESSARY BY MISSION REQUIREMENTS.

FENCE

1. FENCE AND GATE WORK SHALL PROCEED IN A MANNER THAT PROVIDES CONTINUOUS SECURITY FOR THE CONTRACT DURATION.

2. NEW FENCES AND GATES SHALL BE TIED TO EXISTING FENCES BEFORE REMOVAL OF EXITING FENCE/SECURITY COMPONENTS.

3. THE CONTRACTOR SHALL OBTAIN WRITTEN GOVERNMENT ACCEPTANCE OF NEW FENCES, GATES, AND RELATED SECURITY ITEMS PRIOR TO REMOVING EXISTING FENCES AND GATES.

4. CONTRACTOR PROVIDED LOCKS SHALL BE APPROVED BY THE BASE.

5. SEE SHEET C-102, C-103, C-508 & C-509 FOR PHASING AND FENCING DETAILS.

EXISTING APRON AND TAXIWAY

1. THE CONTRACTOR SHALL MANAGE ITS ACTIVITIES IN A MANNER THAT MINIMIZES THE AMOUNT OF TIME THAT THE F-22 CAPA APRON IS ADVERSELY IMPACTED.

2. THE CONTRACTOR SHALL PROVIDE FLASHING BARRICADES TO PROPERLY MARK PAVEMENT DROP OFFS AND PROTECT WORKERS.

3. THE CONTRACTOR SHALL INSPECT BARRICADES DAILY TO ENSURE THEY ARE IN WORKING ORDER FOR THE FOLLOWING NIGHT. THE CONTRACTOR SHALL TURN FLASHERS ON EACH EVENING OR ENSURE THAT PHOTOCELL CONTROLS ARE FUNCTIONING PROPERLY.

4. CONTRACTOR SHALL CONSIDER JET BLAST WHEN DETERMINING A METHOD TO KEEP BARRICADES IN PLACE. REFER TO BARRIER FENCE DETAILS FOR WIND/JET BLAST REQUIREMENTS.

PAVEMENT MARKINGS

1. THE CONTRACTOR SHALL MANAGE ITS ACTIVITIES IN A MANNER THAT MINIMIZES THE AMOUNT OF TIME THAT PAVEMENT MARKINGS ARE DISCONTINUOUS OR CONFLICTING WITH OTHER MARKINGS. IN NO CASE SHALL SUCH CONDITIONS OCCUR FOR MORE THAN ONE SHIFT.

2. DURING PERIODS WHEN PAVEMENT MARKINGS ARE DISCONTINUOUS OR CONFLICTING WITH OTHER MARKINGS, THE CONTRACTOR SHALL PROVIDE A QUALIFIED PERSON TO MAINTAIN A CONTINUOUS WATCH TO ENSURE THAT NO PILOT OR TOW VEHICLE HAS AN OPPORTUNITY TO FOLLOW AN INAPPROPRIATE PATH.

PAVING/UNDERDRAINS

1. THE CONTRACTOR MAY PERFORM NIGHT PAVING TO REDUCE THE ADVERSELY INFLUENCE OF HOT WEATHER ON THE CONCRETE QUALITY DURING PCC PAVING. REFER TO SPECIFICATION SECTION 32 13 14.13 (CONCRETE PAVING FOR AIRFIELDS AND OTHER HEAVY DUTY PAVEMENTS) REGARDING PAVING IN HOT WEATHER CRITERIA.

US Army Corps of Engineers®

MARK	DESCRIPTION	DATE

DESIGNED BY: J. LOWE
DRAWN BY: T. CRIST
CHECKED BY: M. UNTEN
SUBMITTED BY:
SIZE: ANSI D
ISSUE DATE: OCT 15, 2025
SOLICITATION NO.: W9128A22F0002
CONTRACT NO.: W9128A19D0012

U.S. ARMY CORPS OF ENGINEERS
HONOLULU DISTRICT
FORT SHAFTER, HAWAII

COFFMAN ENGINEERS
745 FORT STREET, SUITE 400
HONOLULU, HAWAII 96813

JOINT BASE PEARL HARBOR-HICKAM, OAHU, HAWAII
FY22 HAWAII AIR NATIONAL GUARD (HIANG) F-22 PLUS UP
ADD EGRESS SHOP

PHASING NOTES

SHEET ID
C-005

REVISED FINAL SUBMITTAL

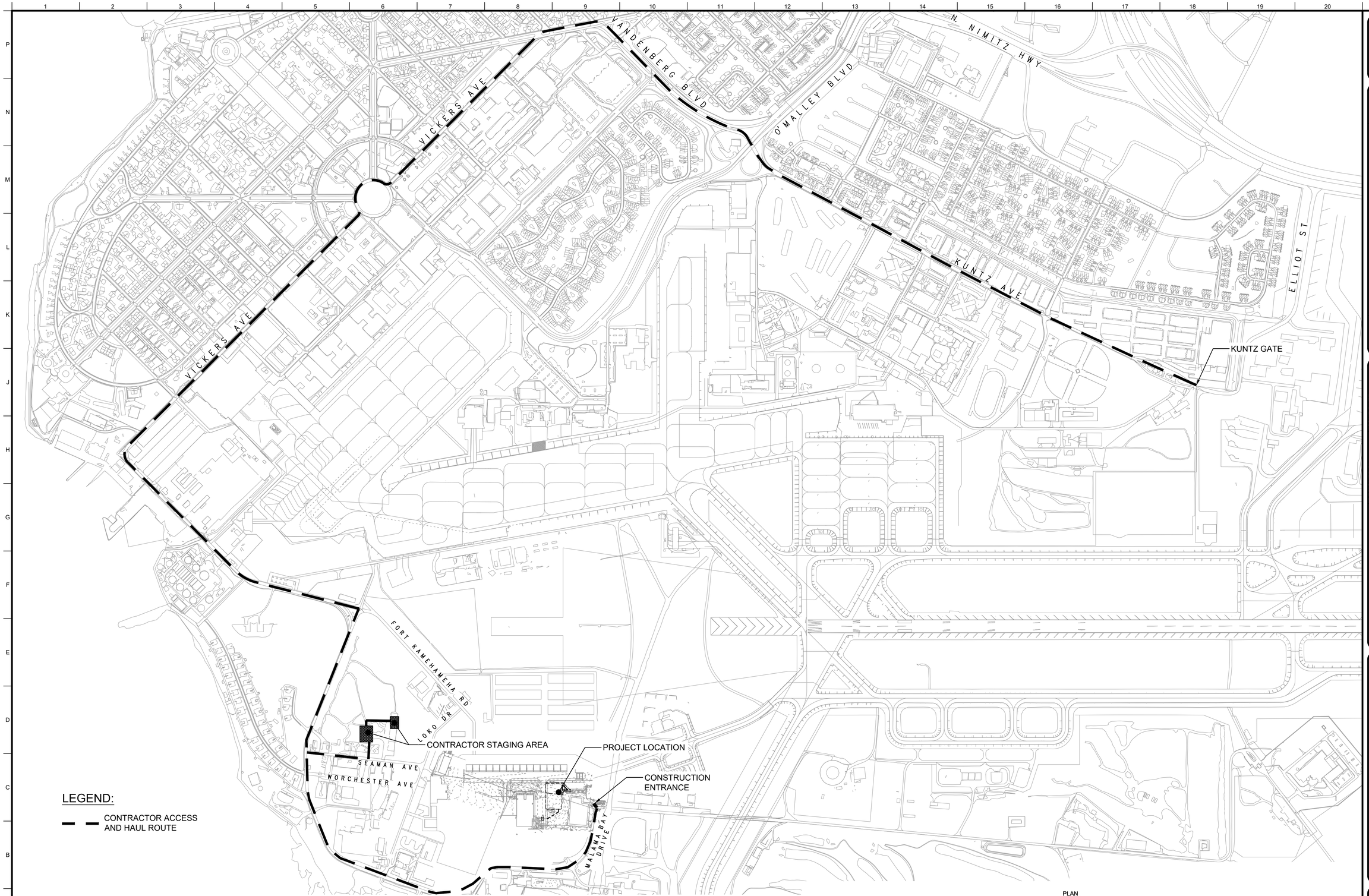

A1 HAUL ROUTE
SCALE 1" = 500'

US Army Corps of Engineers®

MARK	DESCRIPTION	DATE

DESIGNED BY: J. LOWE
DRAWN BY: T. CRIST
CHECKED BY: M. UNTEN
SUBMITTED BY:
SIZE: ANSI D
ISSUE DATE: OCT 15, 2025
SOLICITATION NO.: W9128A22F0002
CONTRACT NO.: W9128A19D0012

U.S. ARMY CORPS OF ENGINEERS
HONOLULU DISTRICT
FORT SHAFTER, HAWAII

COFFMAN ENGINEERS
745 FORT STREET, SUITE 400
HONOLULU, HAWAII 96813

JOINT BASE PEARL HARBOR-HICKAM, OAHU, HAWAII
FY22 HAWAII AIR NATIONAL GUARD (HIANG) F-22 PLUS UP
ADD EGRESS SHOP

HAUL ROUTE

SHEET ID
C-101

REVISED FINAL SUBMITTAL

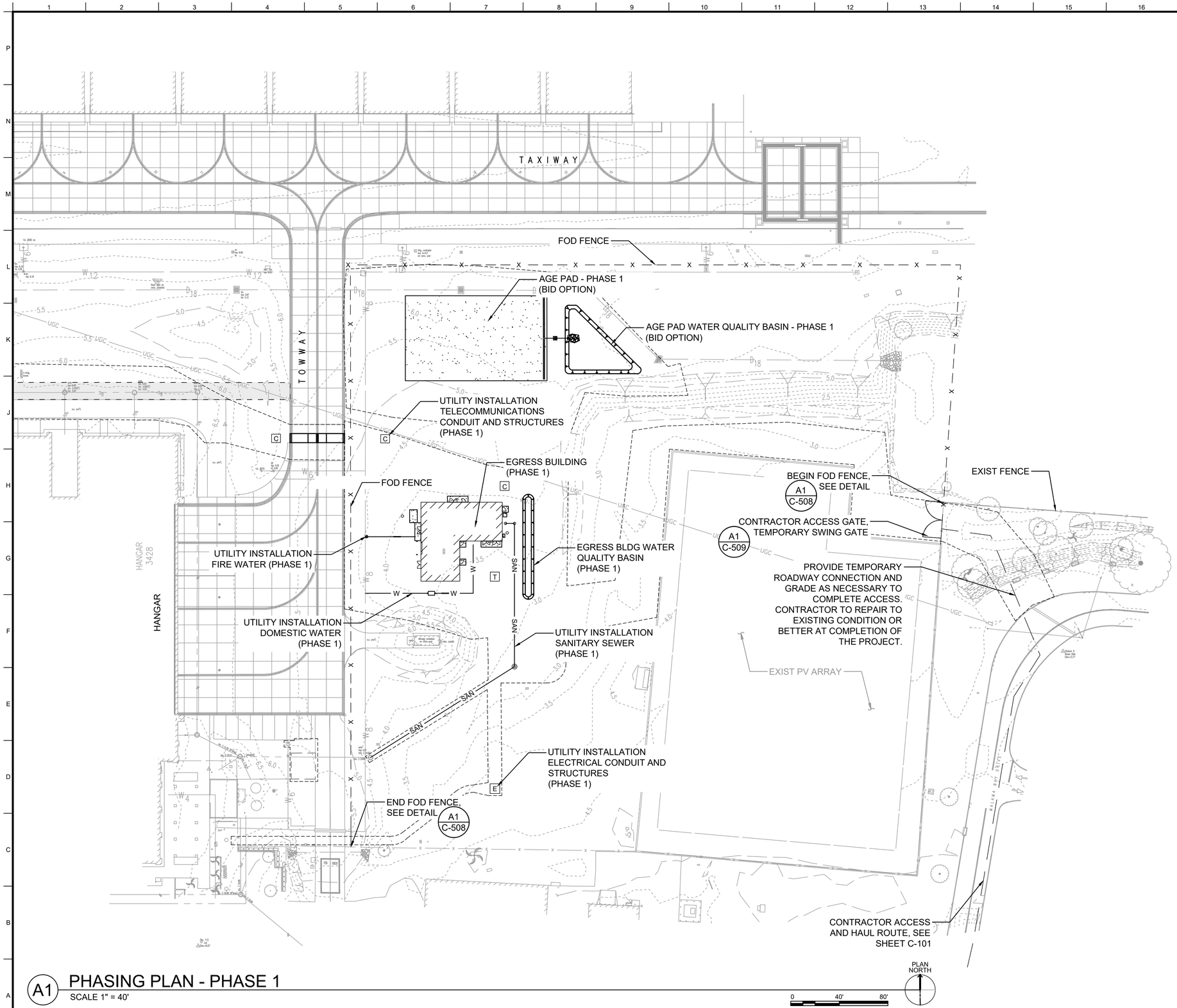

A1 PHASING PLAN - PHASE 1

SCALE 1" = 40'

GENERAL SHEET NOTES:

1. ESCORTS REQUIRED ONLY WHEN CONNECTING UTILITIES AND ERECTING THE TEMPORARY CONSTRUCITON FENCE
2. SEE SHEET C-004 FOR GENERAL PHASING NOTES.
3. SEE SHEET C-101 FOR HAUL ROUTE AND STAGING AREA.
4. SEE SHEETS C-801 THRU C-811 FOR SCOPE BID OPTION SCOPE ITEMS.

PHASE 1 SCOPE OF WORK:

CONTRACTOR TO COMPLETE THE LIST OF ITEMS BELOW DURING PHASE ONE BEFORE STARTING PHASE TWO SCOPE OF WORK.

NOTE: THROUGH CONSTRUCTION, THE TOWWAY MUST NOT BE CLOSED FOR MORE THAN 45 CALENDAR DAYS.

1. CONTRACTOR SHALL HAVE 5 CONTINUOUS DAYS TO CONSTRUCT AND INSTALL THE TEMPORARY FOD FENCE. ESCORT WILL BE REQUIRED.
2. IMPLEMENT EROSION CONTROL MEASURES AS SHOWN ON SHEETS C-104,C-105 AND C-106 FOR BASE BID SCOPE ITEMS AND SHEETS C-801, C-802, AND C-803 FOR BID OPTION SCOPE ITEMS IF APPLICABLE.
3. EXCAVATE AND MAINTAIN EGRESS BUILDING WATER QUALITY POND AND AGE PAD WATER QUALITY POND IF APPLICABLE.
4. GRADE AND PAVE AGE PAD FOR BID OPTION SCOPE IF APPLICABLE.
5. INSTALL UTILITIES FOR EGRESS BUILDING AS SHOWN
6. GRADE EGRESS BUILDING
7. INSTALL EGRESS BUILDING
8. PAVE CONCRETE SIDEWALK AT EGRESS BUILDING
9. GRADE AND PREPARE EGRESS BLDG WATER QUALITY BASIN
10. GRADE AND PREPARE AGE PAD WATER QUALITY BASIN FOR BID OPTION SCOPE IF APPLICABLE.
11. CLEAR AND GRADE AREAS FOR AC PAVEMENT AND CONCRETE TOWWAY THAT OCCURS IN PHASE 2 INCLUDING BASE BID AREA AND BID OPTION SCOPE AREAS IF APPLICABLE (AGE PAD AND GOX CANOPY STRUCTURE).

LEGEND:

—×— LIGHTED BARRICADE (FOD FENCE)

- - - - - - - LIMITS OF DISTURBANCE

CONCRETE

US Army Corps of Engineers®

MARK	DESCRIPTION	DATE

ISSUE DATE: OCT 15, 2025
SOLICITATION NO.: W9128A22F0002
CONTRACT NO.: W9128A19D0012

DESIGNED BY: J. LOWE
DRAWN BY: T. CRIST
CHECKED BY: M. UNTEN
SUBMITTED BY:
SIZE: ANSI D

U.S. ARMY CORPS OF ENGINEERS
HONOLULU DISTRICT
FORT SHAFTER, HAWAII

COFFMAN ENGINEERS
745 FORT STREET, SUITE 400
HONOLULU, HAWAII 96813

JOINT BASE PEARL HARBOR-HICKAM, OAHU, HAWAII
FY22 HAWAII AIR NATIONAL GUARD (HIANG) F-22 PLUS UP
ADD EGRESS SHOP

PHASING PLAN - PHASE 1

SHEET ID
C-102

REVISED FINAL SUBMITTAL

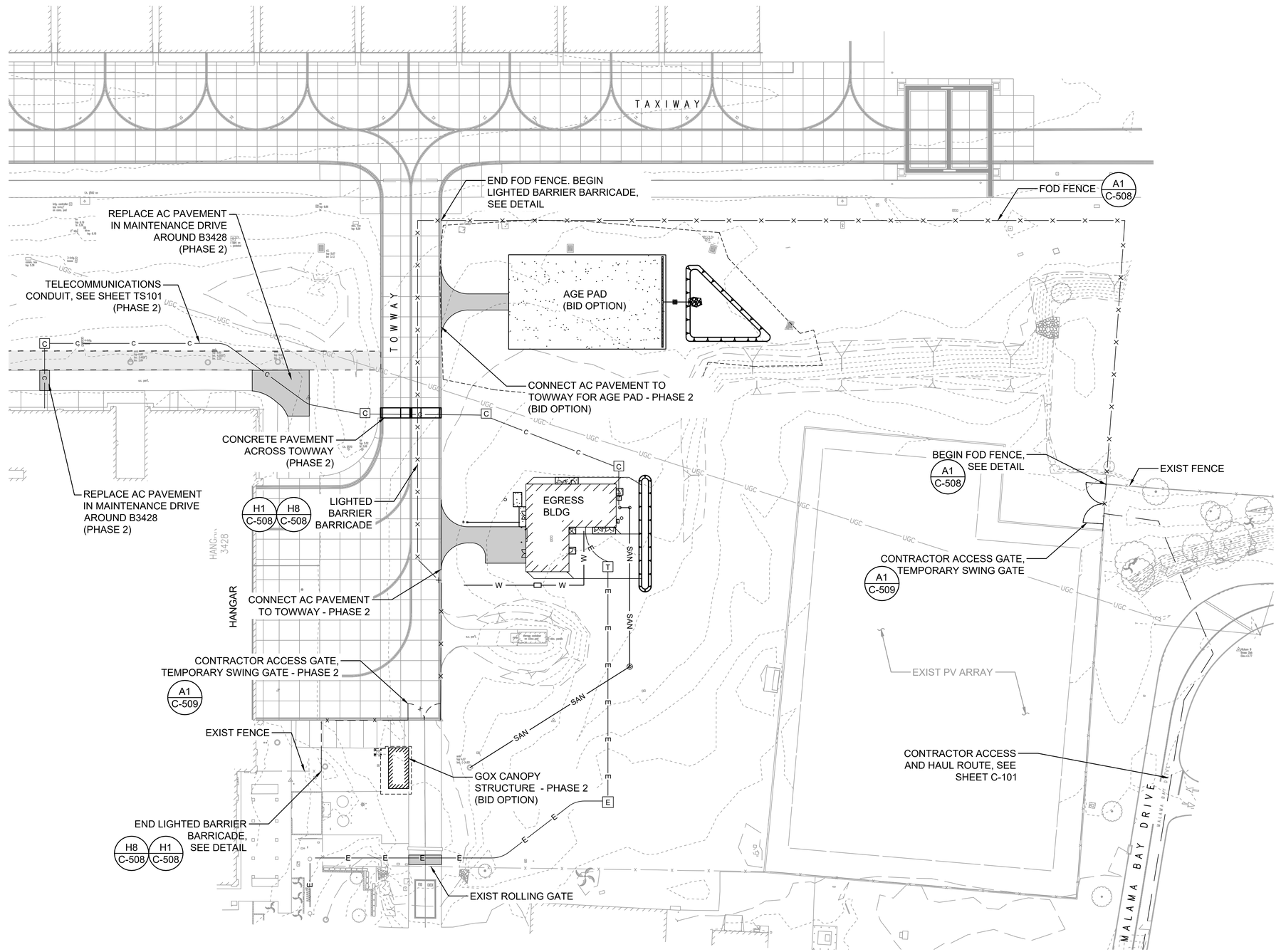

A1 PHASING PLAN - PHASE 2

SCALE 1" = 40'

GENERAL SHEET NOTES:

1. ESCORTS REQUIRED WHEN CONNECTING UTILITIES (INCLUDING TELECOMMUNICATIONS CONDUIT), ERECTING THE TEMPORARY CONSTRUCTION FENCE, CONCRETE DEMO AND CONCRETE PAVEMENT ON TOWWAY, AND ASPHALT PAVEMENT OF MAINTENANCE DRIVE AROUND B3428.
2. SEE SHEET C-004 FOR GENERAL PHASING NOTES.
3. SEE SHEET C-101 FOR HAUL ROUTE AND STAGING AREA.
4. SEE SHEETS C-801 THRU C-811 FOR SCOPE BID OPTION SCOPE ITEMS.

PHASE 2 SCOPE OF WORK:

CONTRACTOR TO COMPLETE THE LIST OF ITEMS BELOW DURING PHASE TWO BEFORE COMPLETION OF CONSTRUCTION PHASE.

NOTE: THROUGH CONSTRUCTION, THE TOWWAY MUST NOT BE CLOSED FOR MORE THAN 45 CALENDAR DAYS.

1. CONTRACTOR SHALL HAVE 3 CONTINUOUS DAYS TO MODIFY AND RELOCATE TEMPORARY FOD FENCE ALONG TOWWAY. ESCORT WILL BE REQUIRED.
2. IMPLEMENT EROSION CONTROL MEASURES AS SHOWN ON SHEETS C-104,C-105 AND C-106 FOR BASE BID SCOPE ITEMS AND SHEETS C-801, C-802, AND C-803 FOR BID OPTION SCOPE ITEMS IF APPLICABLE.
3. PAVE AC PAVEMENT CONNECTING AGE PAD TO THE TOWWAY FOR BID OPTION SCOPE IF APPLICABLE.
4. PAVE AC PAVEMENT CONNECTING EGRESS BUILDING TO THE TOWWAY
5. CONSTRUCT, PAVE, AND GRADE GOX CANOPY SHELTER FOR BID OPTION SCOPE IF APPLICABLE.
6. DEMOLISH AND REMOVE TOWWAY CONCRETE PAVEMENT FOR TELECOMMUNICATION CONDUIT. SEE SHEET CD101 FOR LIMITS OF DEMOLITION.
7. DEMOLISH AND REMOVE ASPHALT PAVEMENT FOR TELECOMMUNICATIONS CONDUIT. SEE SHEET CD101 FOR LIMITS OF DEMOLITION.
8. INSTALL TELECOMMUNICATION CONDUIT ACROSS TOWWAY AND WEST OF TOWWAY TO POINT OF CONNECTION. (SEE SHEET TS101)
9. REPAVE AC PAVEMENT ALONG MAINTENANCE DRIVE AROUND NORTH SIDE OF B3428.
10. INSTALL CONCRETE PAVEMENT ACROSS TOWWAY OVER TELECOMMUNICATIONS CONDUIT.
11. INSTALL BOLLARDS AROUND EXISTING FIRE HYDRANT AT GOX CANOPY STRUCTURE FOR BID OPTION SCOPE IF APPLICABLE.
12. UPON COMPLETION OF PHASE 2 SCOPE, THE CONTRACTOR MAY MOVE AND RELOCATE TEMPORARY FOD FENCE TO LOCATIONS SHOWN ON PHASE 1 (NO CLOSURE OF TOWWAY) OR END PROJECT.

LEGEND:

—×— LIGHTED BARRICADE

- - - - - - - LIMITS OF DISTURBANCE

AC PAVEMENT

CONCRETE

US Army Corps of Engineers®

MARK	DESCRIPTION	DATE

ISSUE DATE: OCT 15, 2025
SOLICITATION NO.: W9128A22F0002
CONTRACT NO.: W9128A19D0012

DESIGNED BY: J. LOWE
DRAWN BY: T. CRIST
CHECKED BY: M. UNTEN
SUBMITTED BY:
SIZE: ANSI D

U.S. ARMY CORPS OF ENGINEERS
HONOLULU DISTRICT
FORT SHAFTER, HAWAII

COFFMAN ENGINEERS
745 FORT STREET, SUITE 400
HONOLULU, HAWAII 96813

JOINT BASE PEARL HARBOR-HICKAM, OAHU, HAWAII
FY22 HAWAII AIR NATIONAL GUARD (HIANG) F-22 PLUS UP
ADD EGRESS SHOP

PHASING PLAN - PHASE 2

SHEET ID
C-103

REVISED FINAL SUBMITTAL

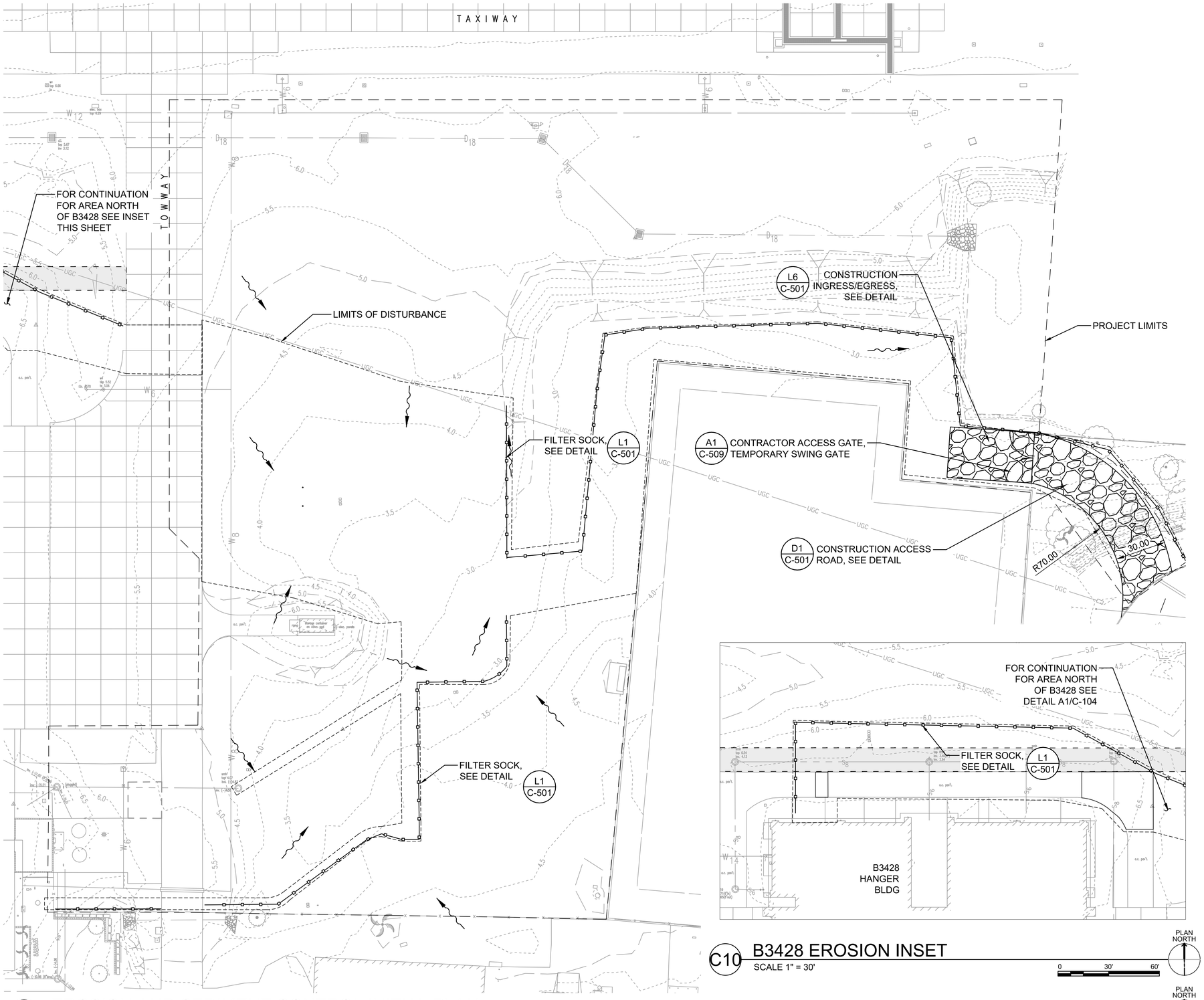

A1 EROSION AND SEDIMENT CONTROL INITIAL PLAN
SCALE 1" = 30'

C10 B3428 EROSION INSET
SCALE 1" = 30'

PLAN NORTH
0 30' 60'

GENERAL SHEET NOTES:

1. FOR EROSION AND SEDIMENT CONTROL NOTES, SEE SHEET C-002.
2. FOR SECURITY FENCING AND PHASING, SEE SHEETS C-102 AND C-103.
3. THE PROJECT'S LIMITS OF DISTURBANCE IS 1.42-ACRES AS SHOWN WITHIN THE APPROXIMATE PROJECT LIMITS. INCLUDING COSA, THE TOTAL PROJECT LIMITS IS +/- 3.0-ACRES. AN NPDES PERMIT FOR STORMWATER DISCHARGES ASSOCIATED WITH CONSTRUCTION ACTIVITIES, PER HAR 11-55 APPENDIX C, SHALL BE OBTAINED FOR THIS PROJECT BY THE CONTRACTOR.
4. SITE ACCESS AND LAYDOWN AREA TO BE COORDINATED WITH THE CONTRACTING OFFICER PRIOR TO THE START OF CONSTRUCTION.
5. THE CONTRACTOR SHALL MANAGE ITS ACTIVITIES IN A MANNER THAT MINIMIZES THE POTENTIAL FOR WATER OR WIND EROSION OF SOIL.
6. EROSION CONTROL MEASURES WILL BE MAINTAINED AT ALL TIMES. IF FULL IMPLEMENTATION OF THE CONTRACT DOCUMENTS DOES NOT PROVIDE FOR EFFECTIVE EROSION CONTROL. ADDITIONAL EROSION AND SEDIMENT CONTROL MEASURES SHALL BE IMPLEMENTED TO CONTROL OR TREAT THE SEDIMENT SOURCE.
7. EROSION CONTROL DEVICES SHALL BE INSTALLED PRIOR TO LAND DISTURBANCE. THE LOCATION OF SOME EROSION CONTROL DEVICES MAY HAVE TO BE ALTERED FROM THAT SHOWN ON THE CONTRACT DRAWINGS. IF DRAINAGE PATTERNS DURING CONSTRUCTION ARE DIFFERENT FROM THE FINAL PROPOSED DRAINAGE PATTERNS. IT IS THE CONTRACTOR'S RESPONSIBILITY TO ACCOMPLISH EROSION CONTROL FOR ALL DRAINAGE PATTERNS CREATED AT VARIOUS STAGES DURING CONSTRUCTION. ANY DIFFICULTY IN CONTROLLING EROSION DURING ANY PHASE OF CONSTRUCTION SHALL BE REPORTED TO THE COR IMMEDIATELY.
8. THE CONTRACTOR SHALL SUBMIT A SWPPP FOR NPDES PERMIT AND RECEIVE APPROVAL OF BY THE AGENCY OR AGENCIES HAVING JURISDICTION.
9. THE CONTRACTOR SHALL PROPERLY CONSIDER WEATHER FORECASTS AND PREVAILING WEATHER CONDITIONS WHEN PLANNING ITS ACTIVITIES.
10. CONTRACTOR TO REFER TO PHASING NOTES/SHEETS FOR PROJECT SCOPE OF WORK DURING PHASE/STAGE ACTIVITIES.
11. LOCATE, FIND, AND AVOID ALL UNDERGROUND UTILITIES INCLUDING COMMUNICATION LINES PRIOR TO INSTALLING FENCING OR COMMENCING TRENCHING OR GRADING.

LEGEND:

- FLOW ARROW
- PROJECT LIMITS
- LIMITS OF DISTURBANCE
- 4.0 EXISTING CONTOUR
- FILTER SOCK

US Army Corps of Engineers®

MARK	DESCRIPTION	DATE

DESIGNED BY: J. LOWE
DRAWN BY: T. CRIST
CHECKED BY: M. UNTEN
SUBMITTED BY:
SIZE: ANSI D
ISSUE DATE: OCT 15, 2025
SOLICITATION NO.: W9128A22F0002
CONTRACT NO.: W9128A19D0012

U.S. ARMY CORPS OF ENGINEERS
HONOLULU DISTRICT
FORT SHAFTER, HAWAII

COFFMAN ENGINEERS
745 FORT STREET, SUITE 400
HONOLULU, HAWAII 96813

JOINT BASE PEARL HARBOR-HICKAM, OAHU, HAWAII
FY22 HAWAII AIR NATIONAL GUARD (HIANG) F-22 PLUS UP
ADD EGRESS SHOP

EROSION AND SEDIMENT CONTROL INITIAL PLAN

SHEET ID
C-104

REVISED FINAL SUBMITTAL

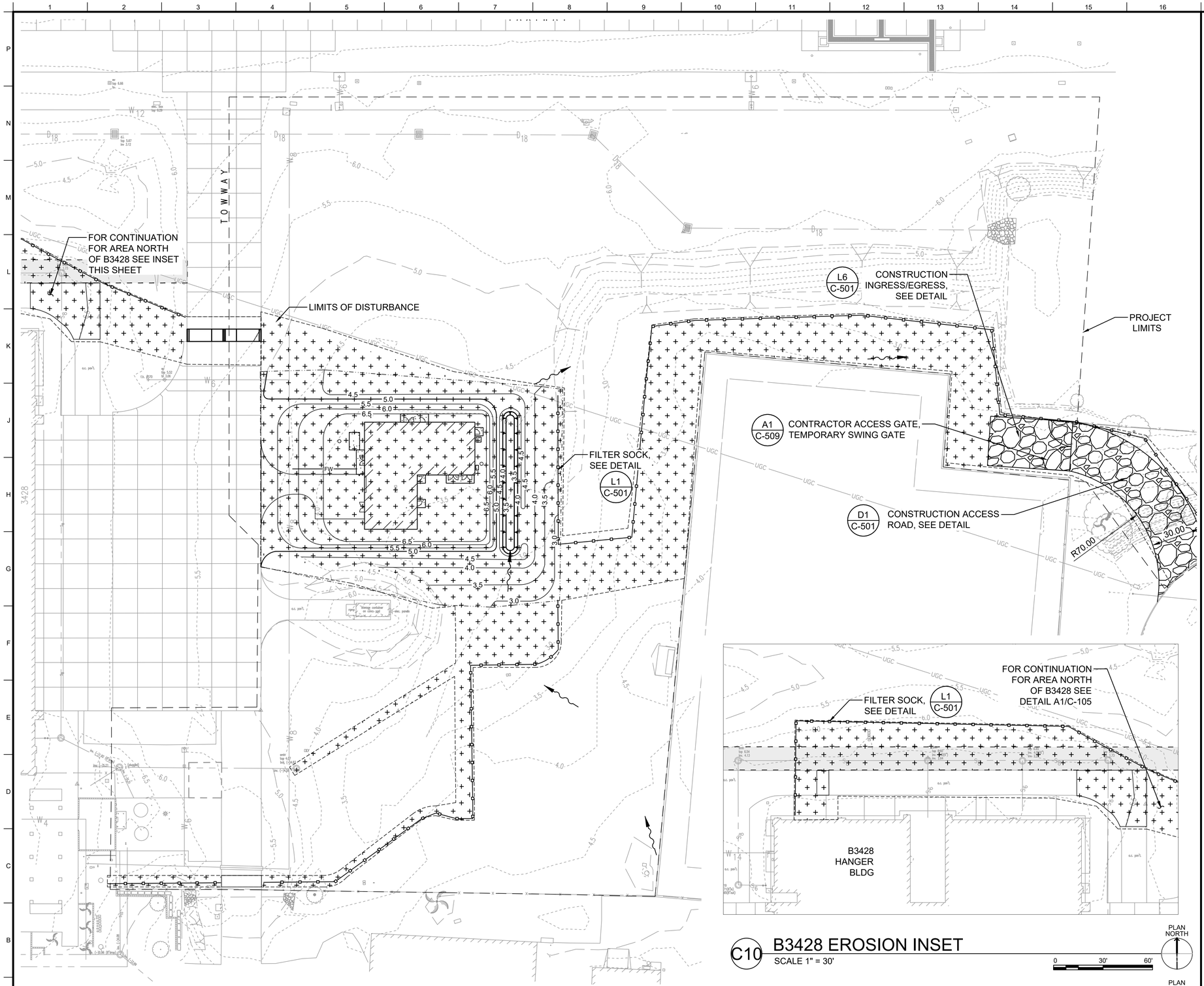

A1 EROSION AND SEDIMENT CONTROL INTERMEDIATE PLAN
SCALE 1" = 30'

C10 B3428 EROSION INSET
SCALE 1" = 30'

GENERAL SHEET NOTES:

1. FOR EROSION AND SEDIMENT CONTROL NOTES, SEE SHEET C-002.
2. FOR SECURITY FENCING AND PHASING, SEE SHEETS C-102 AND C-103.
3. THE PROJECT'S LIMITS OF DISTURBANCE IS 1.42-ACRES AS SHOWN WITHIN THE APPROXIMATE PROJECT LIMITS. INCLUDING COSA, THE TOTAL PROJECT LIMITS IS +/- 3.0-ACRES. AN NPDES PERMIT FOR STORMWATER DISCHARGES ASSOCIATED WITH CONSTRUCTION ACTIVITIES, PER HAR 11-55 APPENDIX C, SHALL BE OBTAINED FOR THIS PROJECT BY THE CONTRACTOR.
4. SITE ACCESS AND LAYDOWN AREA TO BE COORDINATED WITH THE CONTRACTING OFFICER PRIOR TO THE START OF CONSTRUCTION.
5. THE CONTRACTOR SHALL MANAGE ITS ACTIVITIES IN A MANNER THAT MINIMIZES THE POTENTIAL FOR WATER OR WIND EROSION OF SOIL.
6. EROSION CONTROL MEASURES WILL BE MAINTAINED AT ALL TIMES. IF FULL IMPLEMENTATION OF THE CONTRACT DOCUMENTS DOES NOT PROVIDE FOR EFFECTIVE EROSION CONTROL. ADDITIONAL EROSION AND SEDIMENT CONTROL MEASURES SHALL BE IMPLEMENTED TO CONTROL OR TREAT THE SEDIMENT SOURCE.
7. EROSION CONTROL DEVICES SHALL BE INSTALLED PRIOR TO LAND DISTURBANCE. THE LOCATION OF SOME EROSION CONTROL DEVICES MAY HAVE TO BE ALTERED FROM THAT SHOWN ON THE CONTRACT DRAWINGS. IF DRAINAGE PATTERNS DURING CONSTRUCTION ARE DIFFERENT FROM THE FINAL PROPOSED DRAINAGE PATTERNS. IT IS THE CONTRACTOR'S RESPONSIBILITY TO ACCOMPLISH EROSION CONTROL FOR ALL DRAINAGE PATTERNS CREATED AT VARIOUS STAGES DURING CONSTRUCTION. ANY DIFFICULTY IN CONTROLLING EROSION DURING ANY PHASE OF CONSTRUCTION SHALL BE REPORTED TO THE COR IMMEDIATELY.
8. THE CONTRACTOR SHALL SUBMIT A SWPPP FOR NPDES PERMIT AND RECEIVE APPROVAL OF BY THE AGENCY OR AGENCIES HAVING JURISDICTION.
9. THE CONTRACTOR SHALL PROPERLY CONSIDER WEATHER FORECASTS AND PREVAILING WEATHER CONDITIONS WHEN PLANNING ITS ACTIVITIES.
10. CONTRACTOR TO REFER TO PHASING NOTES/SHEETS FOR PROJECT SCOPE OF WORK DURING PHASE/STAGE ACTIVITIES.
11. LOCATE, FIND, AND AVOID ALL UNDERGROUND UTILITIES INCLUDING COMMUNICATION LINES PRIOR TO INSTALLING FENCING OR COMMENCING TRENCHING OR GRADING.

LEGEND:

- FLOW ARROW
- PROJECT LIMITS
- LIMITS OF DISTURBANCE
- GRADING LIMITS
- 4.0 EXISTING CONTOUR
- FILTER SOCK
- TEMPORARY COVER/STABILIZATION

US Army Corps of Engineers®

MARK	DESCRIPTION	DATE

DESIGNED BY: J. LOWE
DRAWN BY: T. CRIST
CHECKED BY: M. UNTEN
SUBMITTED BY:
SIZE: ANSI D
ISSUE DATE: OCT 15, 2025
SOLICITATION NO.: W9128A22F0002
CONTRACT NO.: W9128A19D0012

U.S. ARMY CORPS OF ENGINEERS
HONOLULU DISTRICT
FORT SHAFTER, HAWAII

COFFMAN ENGINEERS
745 FORT STREET, SUITE 400
HONOLULU, HAWAII 96813

JOINT BASE PEARL HARBOR-HICKAM, OAHU, HAWAII
FY22 HAWAII AIR NATIONAL GUARD (HIANG) F-22 PLUS UP
ADD EGRESS SHOP

EROSION AND SEDIMENT CONTROL INTERMEDIATE PLAN

SHEET ID
C-105

REVISED FINAL SUBMITTAL

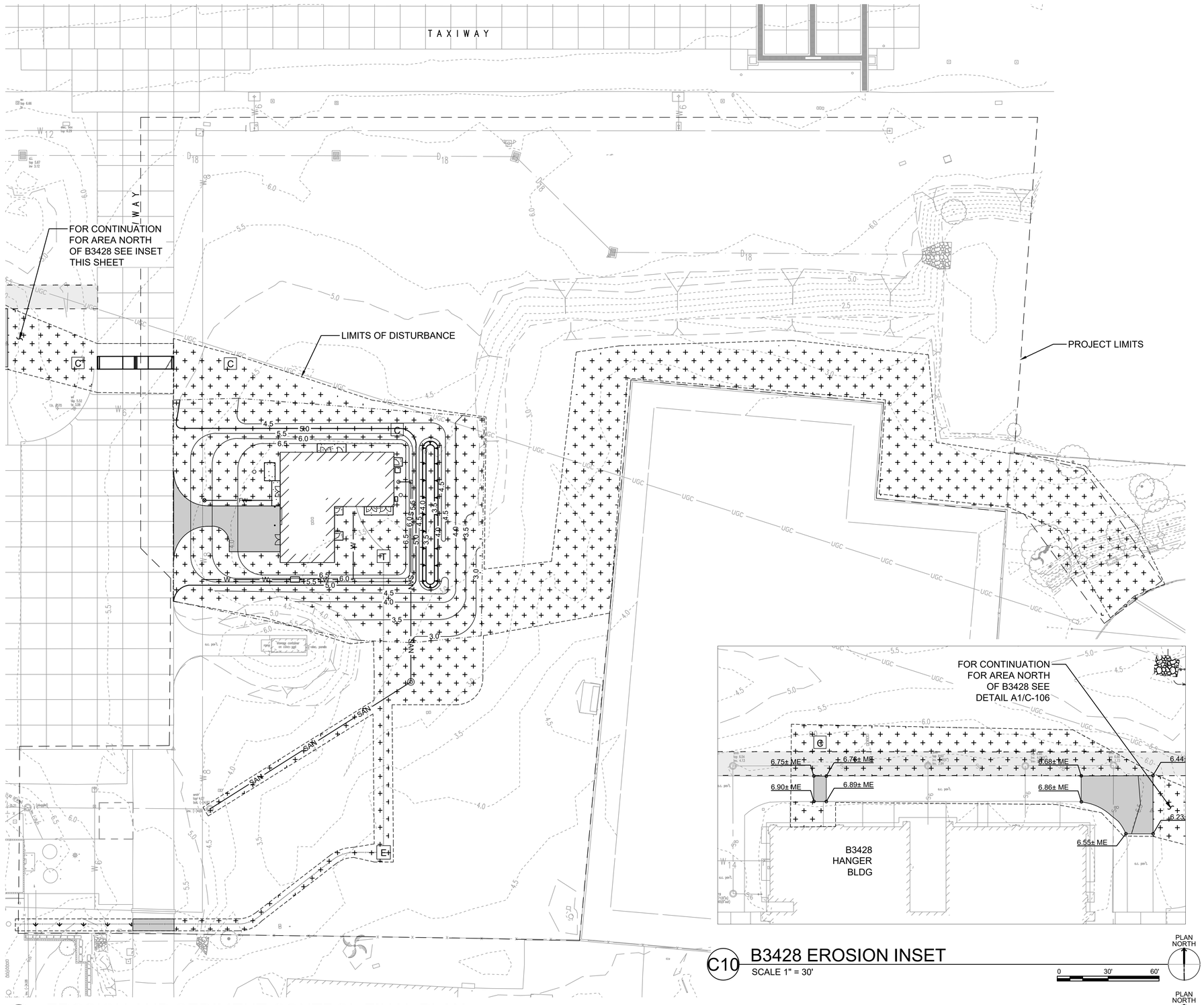

A1 EROSION AND SEDIMENT CONTROL FINAL PLAN
SCALE 1" = 30'

C10 B3428 EROSION INSET
SCALE 1" = 30'

PLAN NORTH
0 30' 60'

GENERAL SHEET NOTES:

1. FOR EROSION AND SEDIMENT CONTROL NOTES, SEE SHEET C-002.
2. FOR SECURITY FENCING AND PHASING, SEE SHEETS C-102 AND C-103.
3. THE PROJECT'S LIMITS OF DISTURBANCE IS 1.42-ACRES AS SHOWN WITHIN THE APPROXIMATE PROJECT LIMITS. INCLUDING COSA, THE TOTAL PROJECT LIMITS IS +/- 3.0-ACRES. AN NPDES PERMIT FOR STORMWATER DISCHARGES ASSOCIATED WITH CONSTRUCTION ACTIVITIES, PER HAR 11-55 APPENDIX C, SHALL BE OBTAINED FOR THIS PROJECT.
4. SITE ACCESS AND LAYDOWN AREA TO BE COORDINATED WITH THE CONTRACTING OFFICER PRIOR TO THE START OF CONSTRUCTION.
5. THE CONTRACTOR SHALL MANAGE ITS ACTIVITIES IN A MANNER THAT MINIMIZES THE POTENTIAL FOR WATER OR WIND EROSION OF SOIL.
6. EROSION CONTROL MEASURES WILL BE MAINTAINED AT ALL TIMES. IF FULL IMPLEMENTATION OF THE CONTRACT DOCUMENTS DOES NOT PROVIDE FOR EFFECTIVE EROSION CONTROL. ADDITIONAL EROSION AND SEDIMENT CONTROL MEASURES SHALL BE IMPLEMENTED TO CONTROL OR TREAT THE SEDIMENT SOURCE.
7. EROSION CONTROL DEVICES SHALL BE INSTALLED PRIOR TO LAND DISTURBANCE. THE LOCATION OF SOME EROSION CONTROL DEVICES MAY HAVE TO BE ALTERED FROM THAT SHOWN ON THE CONTRACT DRAWINGS. IF DRAINAGE PATTERNS DURING CONSTRUCTION ARE DIFFERENT FROM THE FINAL PROPOSED DRAINAGE PATTERNS. IT IS THE CONTRACTOR'S RESPONSIBILITY TO ACCOMPLISH EROSION CONTROL FOR ALL DRAINAGE PATTERNS CREATED AT VARIOUS STAGES DURING CONSTRUCTION. ANY DIFFICULTY IN CONTROLLING EROSION DURING ANY PHASE OF CONSTRUCTION SHALL BE REPORTED TO THE COR IMMEDIATELY.
8. THE CONTRACTOR SHALL SUBMIT A SWPPP FOR NPDES PERMIT AND RECEIVE APPROVAL OF BY THE AGENCY OR AGENCIES HAVING JURISDICTION.
9. THE CONTRACTOR SHALL PROPERLY CONSIDER WEATHER FORECASTS AND PREVAILING WEATHER CONDITIONS WHEN PLANNING ITS ACTIVITIES.
10. CONTRACTOR TO REFER TO PHASING NOTES/SHEETS FOR PROJECT SCOPE OF WORK DURING PHASE/STAGE ACTIVITIES.
11. LOCATE, FIND, AND AVOID ALL UNDERGROUND UTILITIES INCLUDING COMMUNICATION LINES PRIOR TO INSTALLING FENCING OR COMMENCING TRENCHING OR GRADING.

LEGEND:

- FLOW ARROW
- PROJECT LIMITS
- LIMITS OF DISTURBANCE
- GRADING LIMITS
- 4.0 EXISTING CONTOUR
- PERMANENT COVER/STABILIZATION

US Army Corps of Engineers®

MARK	DESCRIPTION	DATE

DESIGNED BY: J. LOWE
DRAWN BY: T. CRIST
CHECKED BY: M. UNTEN
SUBMITTED BY:
SIZE: ANSI D
ISSUE DATE: OCT 15, 2025
SOLICITATION NO.: W9128A22F0002
CONTRACT NO.: W9128A19D0012

U.S. ARMY CORPS OF ENGINEERS
HONOLULU DISTRICT
FORT SHAFTER, HAWAII

COFFMAN ENGINEERS
745 FORT STREET, SUITE 400
HONOLULU, HAWAII 96813

JOINT BASE PEARL HARBOR-HICKAM, OAHU, HAWAII
FY22 HAWAII AIR NATIONAL GUARD (HIANG) F-22 PLUS UP
ADD EGRESS SHOP

EROSION AND SEDIMENT CONTROL FINAL PLAN

SHEET ID
C-106

REVISED FINAL SUBMITTAL

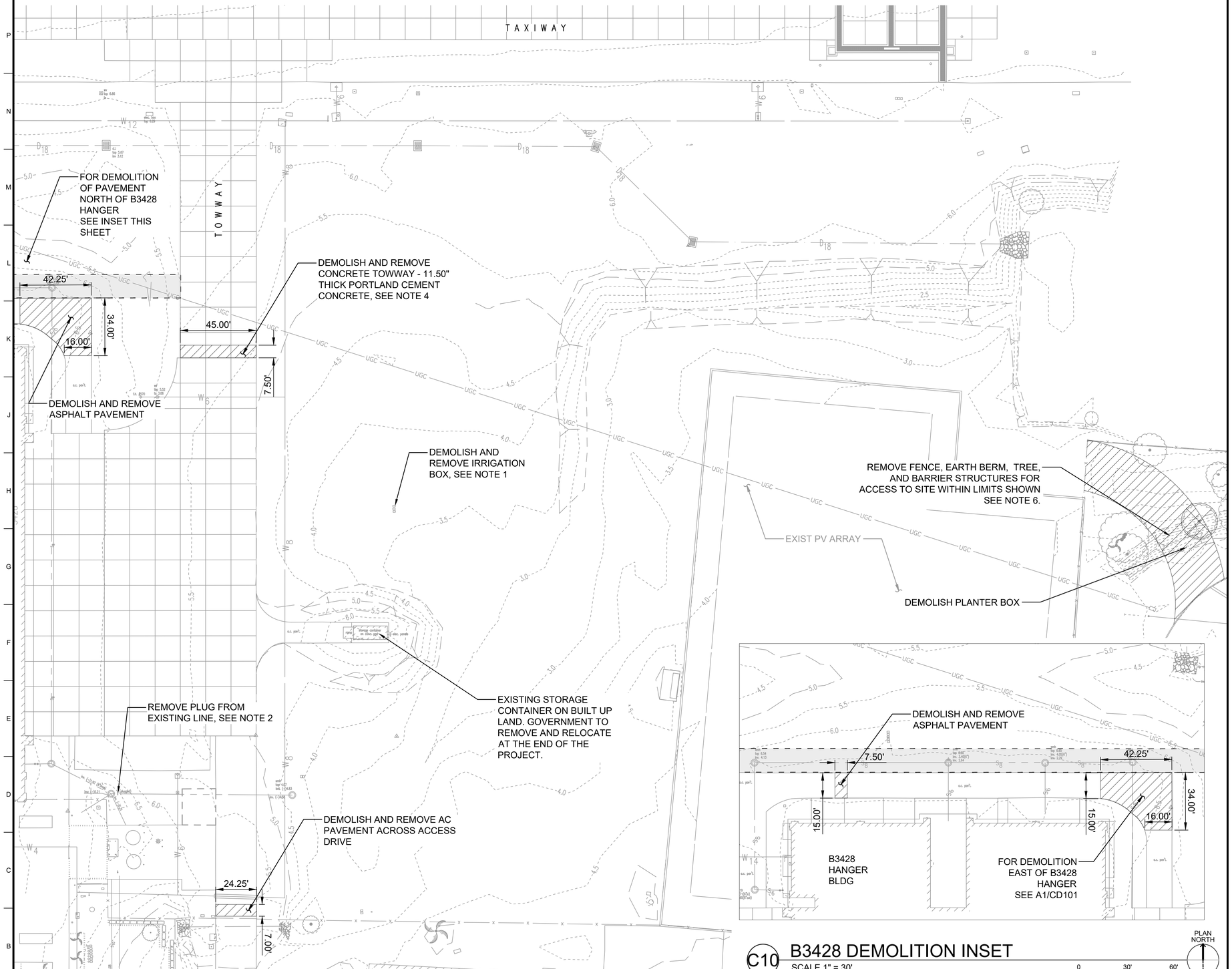

A1 DEMOLITION PLAN
SCALE 1" = 30'

C10 B3428 DEMOLITION INSET
SCALE 1" = 30'

PLAN NORTH
0 30' 60'

GENERAL SHEET NOTES:

1. DEMOLISH AND REMOVE EXISTING IRRIGATION BOXES, VALVES, AND LINES. CUT AND PLUG CONNECTION TO WATER MAIN.
2. AFTER REMOVAL OF PLUG CONTRACTOR SHALL CCTV EXISTING SEWER LINE TO ENSURE NO DEFORMATIONS OCCUR IN THE LINE BEFORE CONNECTION TO NEW SEWER LINE.
3. CONTRACTOR TO SAWCUT CONCRETE APRON AT EXISTING JOINT LINES FOR DEMOLITION AND REMOVAL OF CONCRETE.
4. EXISTING CONCRETE PAVEMENT THICKNESS OBTAINED FROM THE 'AIRFIELD PAVEMENT EVALUATION, HAWAII ANG (JBPHH), HAWAII; ICAO:PHNL, AIR FORCE CIVIL ENGINEER CENTER' (JUNE 2019)
5. CONTRACTOR SHALL REMOVE EXISTING TOWWAY CONCRETE ALONG JOINTS AS SHOWN ON PLANS.
6. CONTRACTOR SHALL REMOVE EXISTING BARRIER STRUCTURES AND EARTHEN BERM TO CREATE CONSTRUCTION ACCESS TO SITE. UPON COMPLETION OF THE PROJECT, THIS AREA WILL BE RESTORED TO INCLUDE FENCE, EARTHEN BERM AND BARRIER STRUCTURE TO MATCH THE PRE-CONSTRUCTION CONDITION. TREE REMOVED WILL NOT BE REPLACED. AREA TO BE GRASSED TO MATCH PRE-CONSTRUCTION CONDITION.

LEGEND:

- DEMOLISH AND REMOVE
- DEMOLISH TREE
- 4.0 EXISTING CONTOUR

US Army Corps of Engineers®

MARK	DESCRIPTION	DATE

DESIGNED BY: J. LOWE	ISSUE DATE: OCT 15, 2025
DRAWN BY: T. CRIST	SOLICITATION NO.: W9128A22F0002
CHECKED BY: M. UNTEN	CONTRACT NO.: W9128A19D0012
SUBMITTED BY:	
SIZE: ANSI D	

U.S. ARMY CORPS OF ENGINEERS
HONOLULU DISTRICT
FORT SHAFTER, HAWAII

COFFMAN ENGINEERS
745 FORT STREET, SUITE 400
HONOLULU, HAWAII 96813

JOINT BASE PEARL HARBOR-HICKAM, OAHU, HAWAII
FY22 HAWAII AIR NATIONAL GUARD (HIANG) F-22 PLUS UP
ADD EGRESS SHOP

DEMOLITION PLAN

SHEET ID
CD101

REVISED FINAL SUBMITTAL

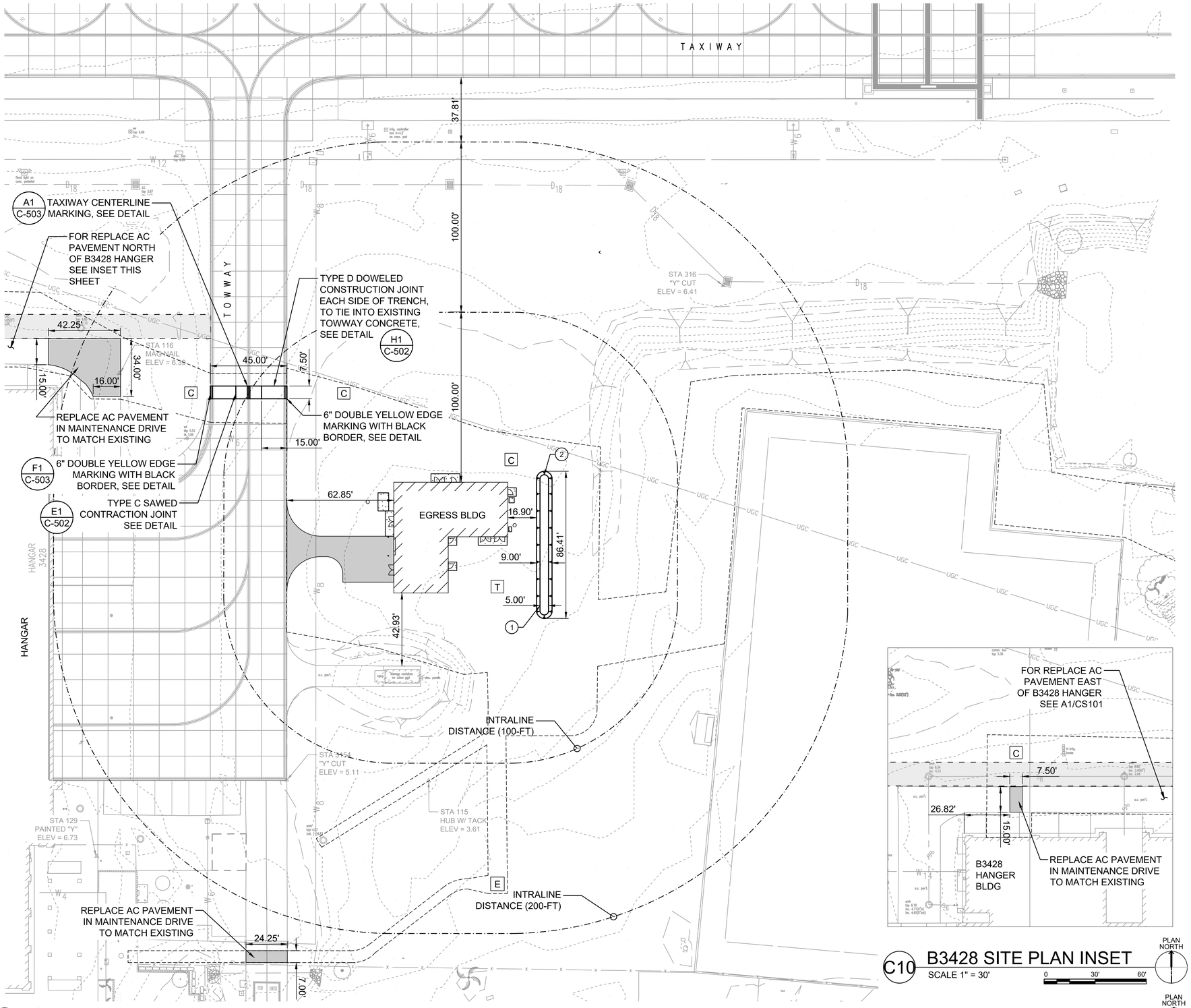

A1 SITE PLAN
SCALE 1" = 30'

C10 B3428 SITE PLAN INSET
SCALE 1" = 30'

GENERAL SHEET NOTES:

1. FOR ENLARGED SITE PLAN SEE SHEET CS401.

LEGEND:

- AC PAVEMENT
- CONCRETE
- LIMITS OF DISTURBANCE
- INTRALINE DISTANCE
- INHABITED BUILDING DISTANCE
- T TRANSFORMER, SEE ELECTRICAL PLANS
- E ELECTRICAL MANHOLE, SEE ELECTRICAL PLANS
- C TELECOM MAINTENACE HOLE, SEE TELECOM PLANS

POINT TABLE

POINT #	NORTHING	EASTING	DESCRIPTION
1	55608.63	1656988.33	WQV BASIN
2	55685.43	1656990.83	WQV BASIN

US Army Corps of Engineers®

MARK	DESCRIPTION	DATE

DESIGNED BY: J. LOWE
DRAWN BY: T. CRIST
CHECKED BY: M. UNTEN
SUBMITTED BY:
SIZE: ANSI D
ISSUE DATE: OCT 15, 2025
SOLICITATION NO.: W9128A22F0002
CONTRACT NO.: W9128A19D0012

U.S. ARMY CORPS OF ENGINEERS
HONOLULU DISTRICT
FORT SHAFTER, HAWAII

COFFMAN ENGINEERS
745 FORT STREET, SUITE 400
HONOLULU, HAWAII 96813

JOINT BASE PEARL HARBOR-HICKAM, OAHU, HAWAII
FY22 HAWAII AIR NATIONAL GUARD (HIANG) F-22 PLUS UP
ADD EGRESS SHOP

SITE PLAN

SHEET ID
CS101

REVISED FINAL SUBMITTAL

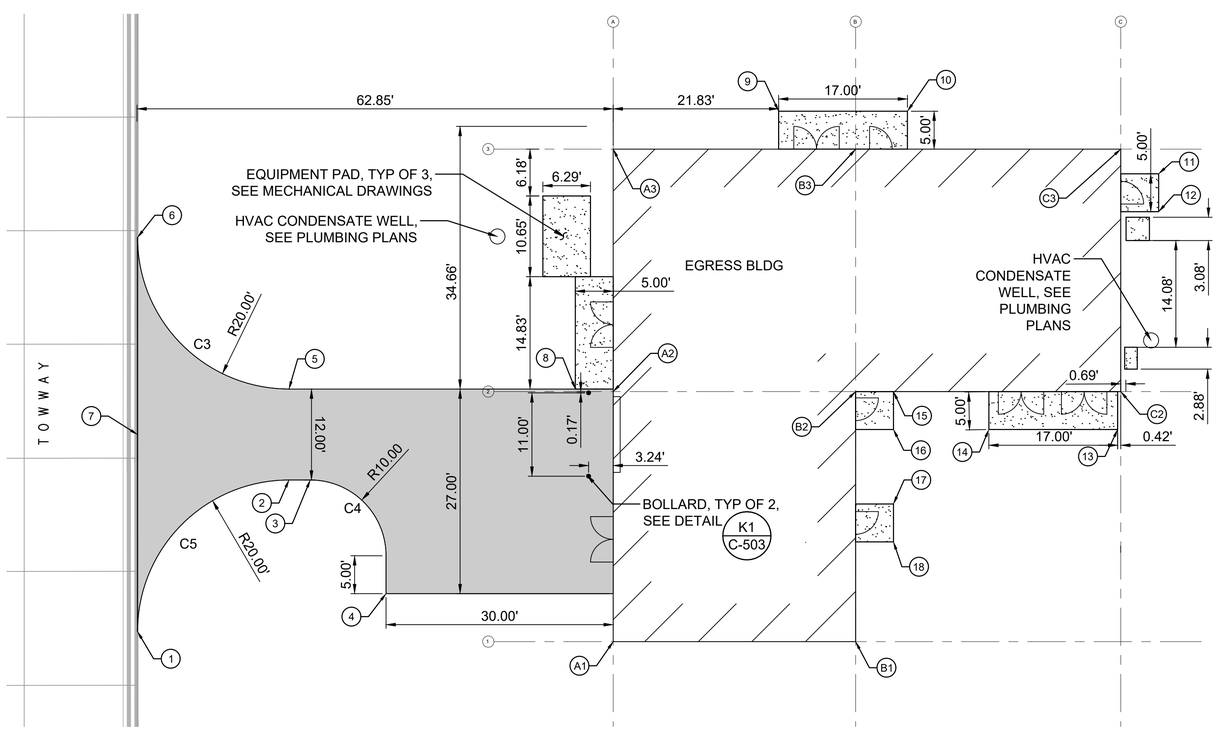

A1 EGRESS BLDG ENLARGED SITE PLAN

SCALE 1" = 10'

PLAN NORTH

0 10' 20'

LEGEND:

AC PAVEMENT

CONCRETE

CURVE TABLE

CURVE #	LENGTH	RADIUS	DELTA	CH LENGTH
C1	31.42'	20.00'	090°00'00"	28.28'
C2	31.42'	20.00'	090°00'00"	28.28'
C3	31.42'	20.00'	090°00'00"	28.28'
C4	15.71'	10.00'	089°59'38"	14.14'
C5	31.42'	20.00'	090°00'00"	28.28'

POINT TABLE

POINT #	NORTHING	EASTING	DESCRIPTION
1	55617.38	1656839.63	PAVEMENT EDGE
2	55637.38	1656859.63	PAVEMENT EDGE
3	55637.38	1656862.44	PAVEMENT EDGE
4	55622.38	1656872.45	PAVEMENT EDGE
5	55649.38	1656859.63	PAVEMENT EDGE
6	55669.38	1656839.63	PAVEMENT EDGE
7	55643.38	1656839.64	PAVEMENT EDGE
8	55649.38	1656897.43	CONC SIDEWALK
9	55686.04	1656924.26	CONC SIDEWALK
10	55686.04	1656941.26	CONC SIDEWALK
11	55677.79	1656974.43	CONC STOOP
12	55672.79	1656974.43	CONC STOOP
13	55644.04	1656969.01	CONC STOOP
14	55644.04	1656952.01	CONC STOOP
15	55649.04	1656939.42	CONC STOOP
16	55644.04	1656939.42	CONC STOOP
17	55634.21	1656939.42	CONC STOOP
18	55629.21	1656939.42	CONC STOOP

GRID LINE POINT TABLE

POINT #	NORTHING	EASTING
A1	55616.04	1656902.43
A2	55649.04	1656902.43
A3	55681.04	1656902.43
B1	55616.04	1656934.43
B2	55649.04	1656934.43
B3	55681.03	1656934.44
C2	55649.04	1656969.43
C3	55681.04	1656969.43

US Army Corps of Engineers®

MARK	DESCRIPTION	DATE

DESIGNED BY: J. LOWE
DRAWN BY: T. GRIST
CHECKED BY: M. UNTEN
SUBMITTED BY:
SIZE: ANSI D

ISSUE DATE: OCT 15, 2025
SOLICITATION NO.: W9128A22F0002
CONTRACT NO.: W9128A19D0012

U.S. ARMY CORPS OF ENGINEERS
HONOLULU DISTRICT
FORT SHAFTER, HAWAII

COFFMAN ENGINEERS
745 FORT STREET, SUITE 400
HONOLULU, HAWAII 96813

JOINT BASE PEARL HARBOR-HICKAM, OAHU, HAWAII
FY22 HAWAII AIR NATIONAL GUARD (HIANG) F-22 PLUS UP
ADD EGRESS SHOP

ENLARGED SITE PLAN

SHEET ID

CS401

REVISED FINAL SUBMITTAL

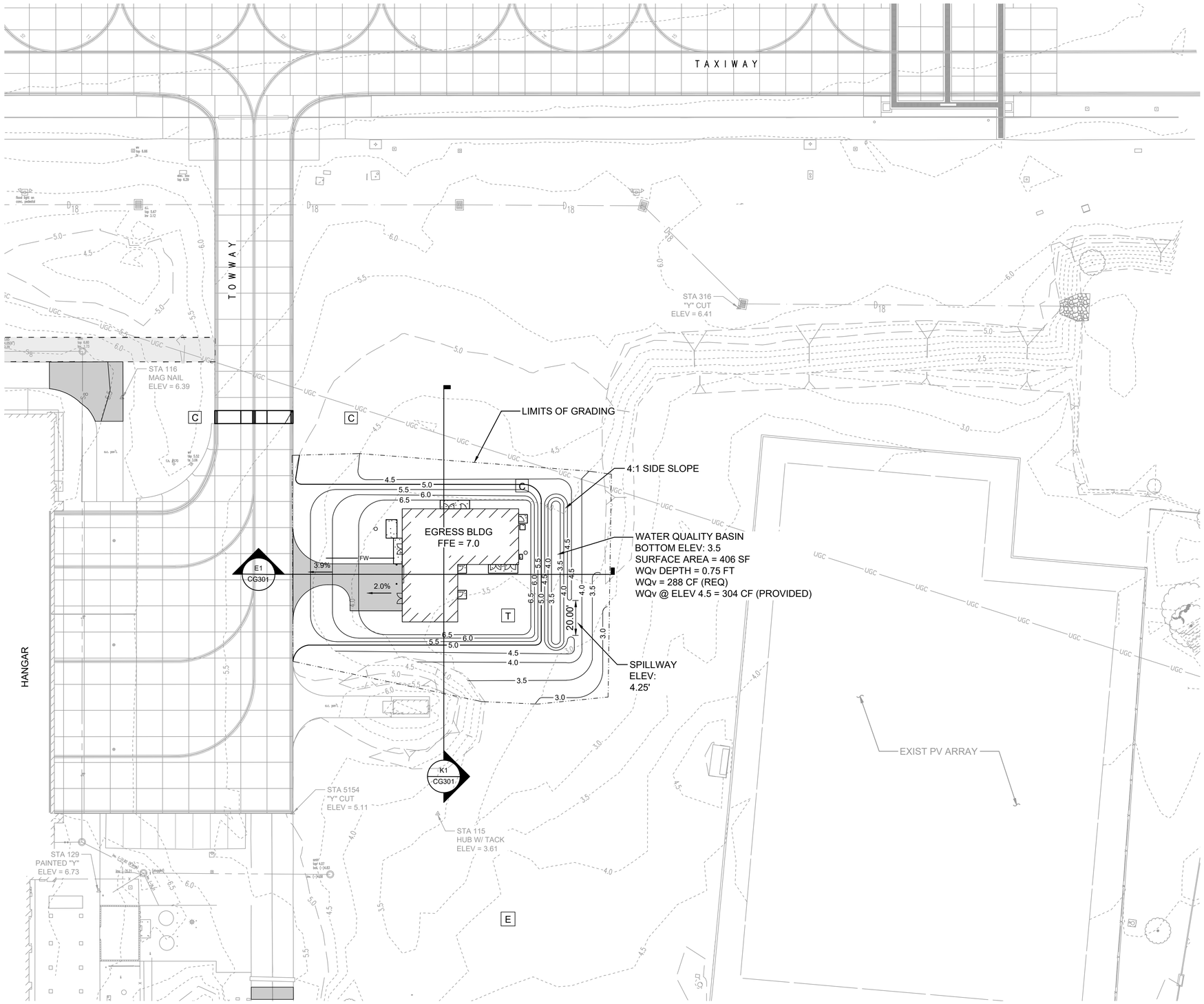

A1 GRADING PLAN

SCALE 1" = 30'

GENERAL SHEET NOTES:

1. FOR ENLARGED GRADING PLAN SEE SHEET CG401.

LEGEND:

- FLOW ARROW
- LIMITS OF GRADING
- 4.0 FINISHED CONTOUR
- 4.0 EXISTING CONTOUR
- 5.40 FG FINISHED GRADE ELEVATION
- 5.40 ME MATCH EXISTING ELEVATION
- 5.40 EP EDGE OF PAVEMENT ELEVATION

US Army Corps of Engineers®

MARK	DESCRIPTION	DATE

DESIGNED BY: J. LOWE
DRAWN BY: T. CRIST
CHECKED BY: M. UNTEN
SUBMITTED BY:
SIZE: ANSI D
ISSUE DATE: OCT 15, 2025
SOLICITATION NO.: W9128A22F0002
CONTRACT NO.: W9128A19D0012

U.S. ARMY CORPS OF ENGINEERS
HONOLULU DISTRICT
FORT SHAFTER, HAWAII

COFFMAN ENGINEERS
745 FORT STREET, SUITE 400
HONOLULU, HAWAII 96813

JOINT BASE PEARL HARBOR-HICKAM, OAHU, HAWAII
FY22 HAWAII AIR NATIONAL GUARD (HIANG) F-22 PLUS UP
ADD EGRESS SHOP

GRADING PLAN

SHEET ID

CG101

REVISED FINAL SUBMITTAL

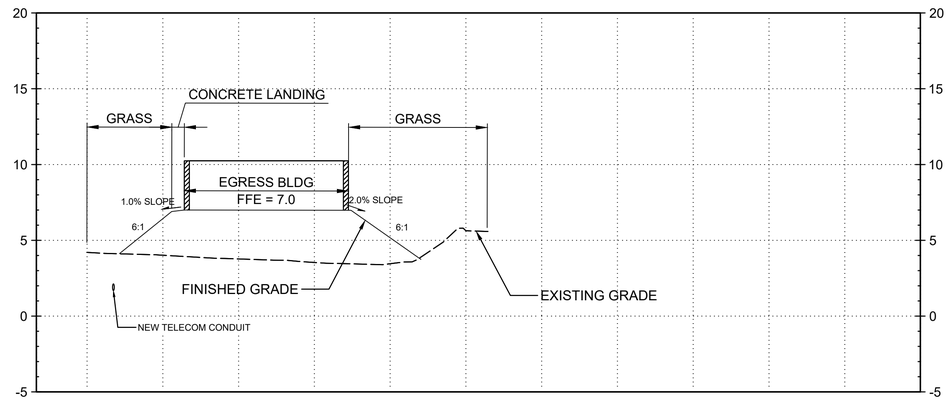

K1 SECTION

SCALE 1" = 30' H, 1"=5' V

0 30' 60'

0 5' 10'

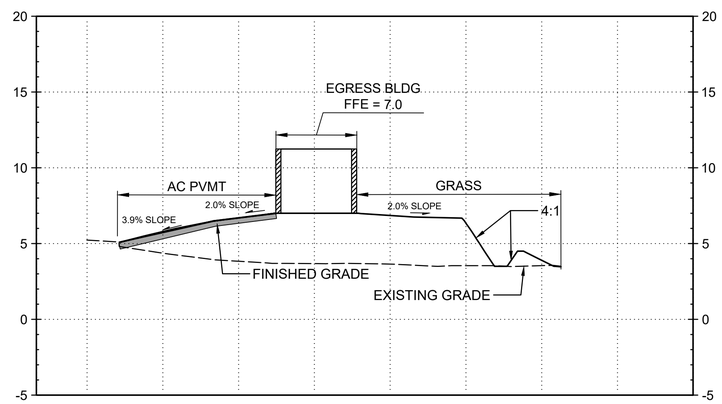

E1 SECTION

SCALE 1" = 30' H, 1"=5' V

0 30' 60'

0 5' 10'

US Army Corps of Engineers®

MARK	DESCRIPTION	DATE

ISSUE DATE: OCT 15, 2025
SOLICITATION NO.: W9128A22F0002
CONTRACT NO.: W9128A19D0012

DESIGNED BY: J. LOWIE
DRAWN BY: T. CRIST
CHECKED BY: M. UNTEN
SUBMITTED BY:
SIZE: ANSI D

U.S. ARMY CORPS OF ENGINEERS
HONOLULU DISTRICT
FORT SHAFTER, HAWAII

COFFMAN ENGINEERS
745 FORT STREET, SUITE 400
HONOLULU, HAWAII 96813

JOINT BASE PEARL HARBOR-HICKAM, OAHU, HAWAII
FY22 HAWAII AIR NATIONAL GUARD (HIANG) F-22 PLUS UP
ADD EGRESS SHOP

SITE SECTIONS

SHEET ID

CG301

REVISED FINAL SUBMITTAL

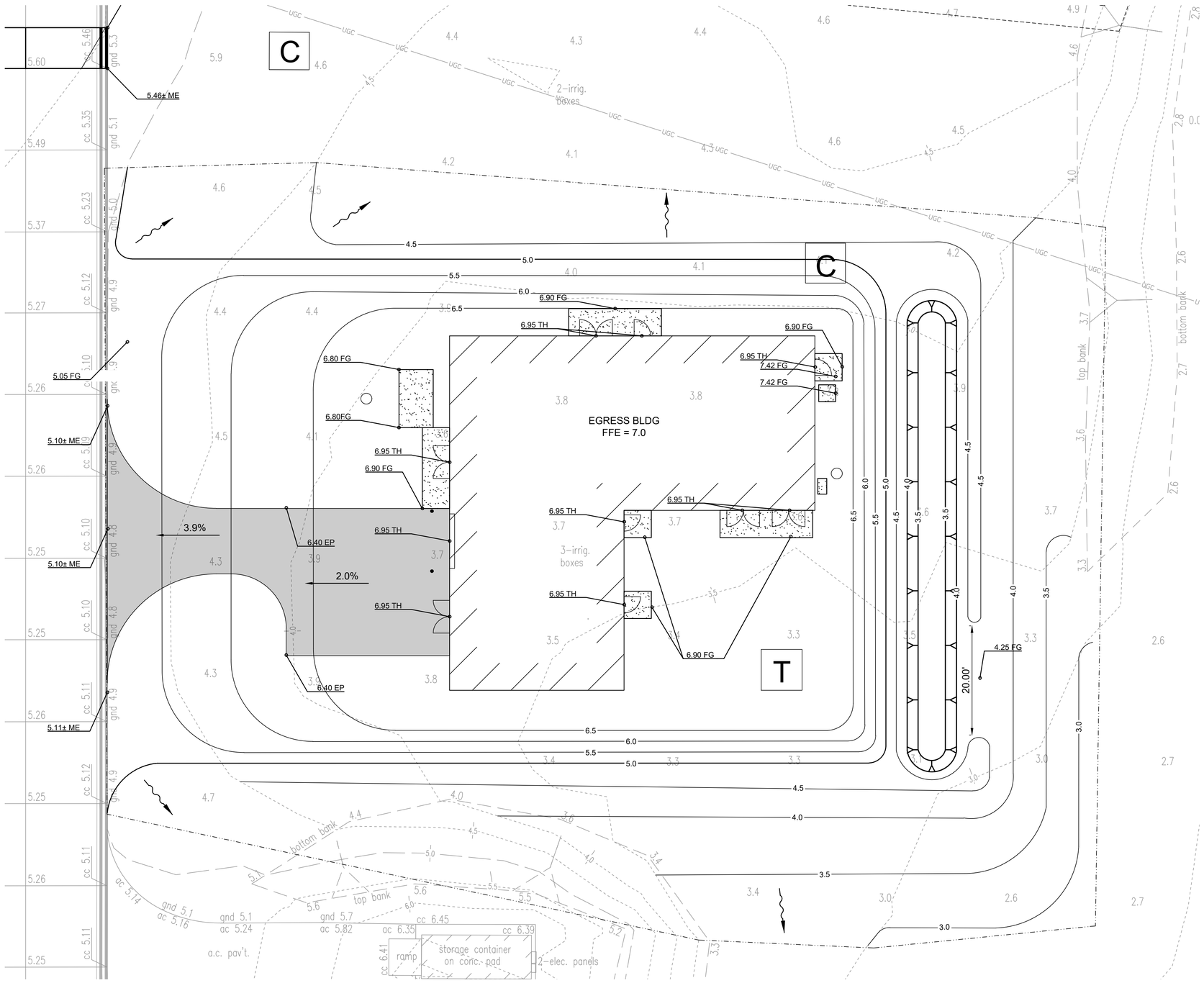

LEGEND:

- FLOW ARROW
- LIMITS OF GRADING
- 4.0 FINISHED CONTOUR
- 4.0 EXISTING CONTOUR
- 5.40 FG FINISHED GRADE ELEVATION
- 5.40 ME MATCH EXISTING ELEVATION
- 5.40 EP EDGE OF PAVEMENT ELEVATION

A1 ENLARGED GRADING PLAN - EGRESS BUILDING

SCALE 1" = 30'

PLAN NORTH

0 10' 20'

US Army Corps of Engineers®

MARK	DESCRIPTION	DATE

ISSUE DATE: OCT 15, 2025
SOLICITATION NO.: W9128A22F0002
CONTRACT NO.: W9128A19D0012

DESIGNED BY: J. LOWE
DRAWN BY: T. CRIST
CHECKED BY: M. UNTEN
SUBMITTED BY:
SIZE: ANSI D

U.S. ARMY CORPS OF ENGINEERS
HONOLULU DISTRICT
FORT SHAFTER, HAWAII

COFFMAN ENGINEERS
745 FORT STREET, SUITE 400
HONOLULU, HAWAII 96813

JOINT BASE PEARL HARBOR-HICKAM, OAHU, HAWAII
FY22 HAWAII AIR NATIONAL GUARD (HIANG) F-22 PLUS UP
ADD EGRESS SHOP

ENLARGED GRADING PLAN

SHEET ID

CG401

REVISED FINAL SUBMITTAL

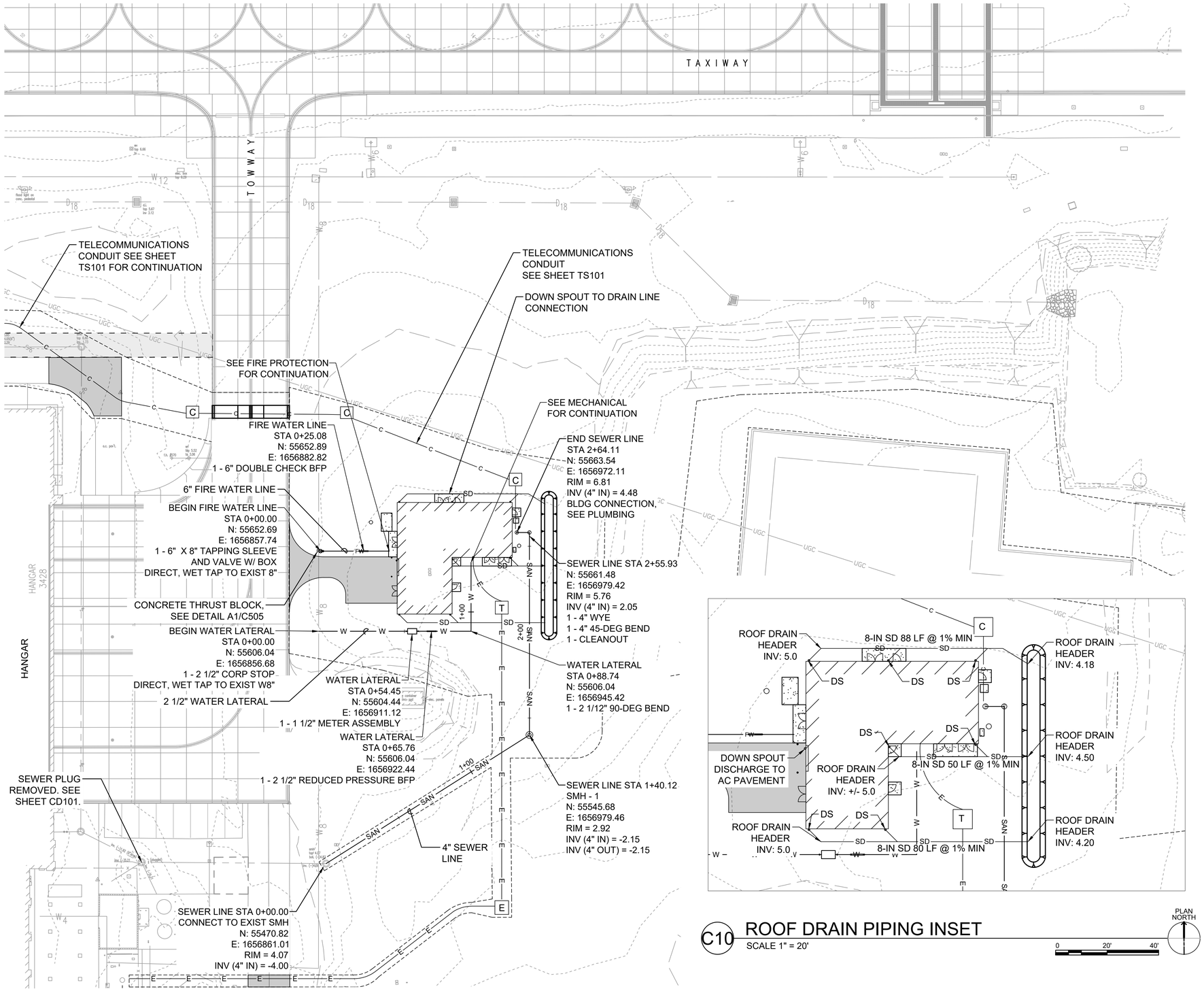

A1 UTILITY PLAN
SCALE 1" = 30'

C10 ROOF DRAIN PIPING INSET
SCALE 1" = 20'

GENERAL SHEET NOTES:

1. CONNECTIONS TO THE BUILDING ARE FIVE (5) FEET FROM THE BUILDING. FOR UTILITY CONTINUATION AT THE BUILDING CONNECTIONS, SEE PLUMBING AND FIRE PROTECTION DRAWINGS.
2. PROVIDE RISER CLEANOUT ON BUILDING SEWER LATERAL CONNECTION FIVE (5) FEET FROM THE BUILDING.
3. FOR SEWER CLEANOUT, SEE DETAIL H12/C-507.
4. FOR SEWER MANHOLE AND COVER, SEE DETAILS A1/C-504 AND M10/C-504.
5. FOR CONCRETE THRUST BLOCK, SEE DETAIL A10/C-507.
6. FOR THE REDUCED PRESSURE BACKFLOW PREVENTER, SEE DETAIL G16/C-505.
7. FOR THE DOUBLE CHECK BACKFLOW PREVENTER, SEE DETAIL A14/C-505.
8. FOR THE WATER METER BOX AND COVER, SEE DETAILS A1/C-506 AND E10/C-506.
9. FOR TYPICAL WATER LINE TRENCHING, SEE DETAIL A8/C-505.
9. FOR TYPICAL SEWER LINE TRENCHING, SEE DETAIL D15/C-504.
10. FOR TYPICAL ROOF DRAIN DOWN SPOUT TRANSITION TO BELOW GROUND PIPE AND HEADER CONNECTION, SEE DETAIL H1/C-507.

LEGEND:

—SAN—	SEWER LINE
— W —	WATER LINE
— FW —	FIRE WATER LINE
— SD —	STORM LINE
T	TRANSFORMER, SEE ELECTRICAL PLANS
E	ELECTRICAL MANHOLE, SEE ELECTRICAL PLANS
C	TELECOM MAINTENACE HOLE, SEE TELECOM PLANS
DS	ROOF DRAIN DOWN SPOUT

US Army Corps of Engineers®

MARK	DESCRIPTION	DATE

ISSUE DATE: OCT 15, 2025
SOLICITATION NO.: W9128A22F0002
CONTRACT NO.: W9128A19D0012
DESIGNED BY: J. LOWE
DRAWN BY: T. CRIST
CHECKED BY: M. UNTEN
SUBMITTED BY:
SIZE: ANSI D

U.S. ARMY CORPS OF ENGINEERS
HONOLULU DISTRICT
FORT SHAFTER, HAWAII

COFFMAN ENGINEERS
745 FORT STREET, SUITE 400
HONOLULU, HAWAII 96813

JOINT BASE PEARL HARBOR-HICKAM, OAHU, HAWAII
FY22 HAWAII AIR NATIONAL GUARD (HIANG) F-22 PLUS UP
ADD EGRESS SHOP

UTILITY PLAN

SHEET ID
CU101

REVISED FINAL SUBMITTAL

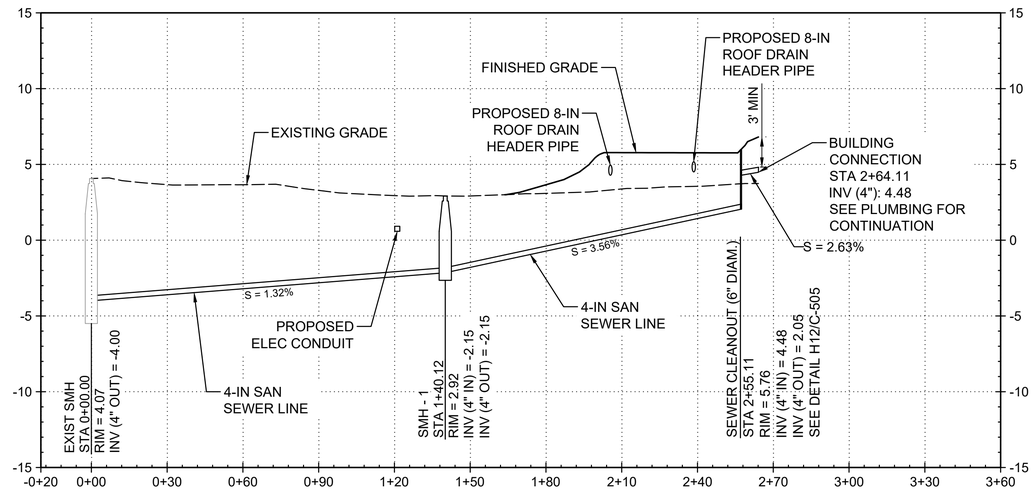

J1 4-INCH SEWER LINE PROFILE

SCALE 1" = 30' H, 1" = 5' V

0 30' 60'

0 5' 10'

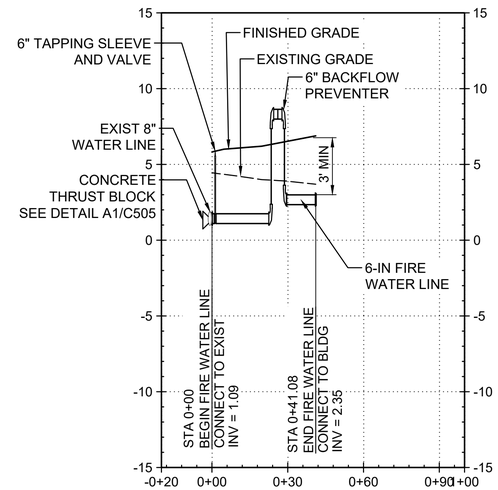

J12 6-INCH FIRE WATER LINE PROFILE

SCALE 1" = 30' H, 1" = 5' V

0 30' 60'

0 5' 10'

US Army Corps of Engineers®

MARK	DESCRIPTION	DATE

U.S. ARMY CORPS OF ENGINEERS
HONOLULU DISTRICT
FORT SHAFTER, HAWAII

COFFMAN ENGINEERS
745 FORT STREET, SUITE 400
HONOLULU, HAWAII 96813

DESIGNED BY: J. LOWE
DRAWN BY: T. CRIST
CHECKED BY: M. UNTEN
SUBMITTED BY:
SIZE: ANSI-D

ISSUE DATE: OCT 15, 2025
SOLICITATION NO.: W9128A22F0002
CONTRACT NO.: W9128A19D0012

JOINT BASE PEARL HARBOR-HICKAM, OAHU, HAWAII
FY22 HAWAII AIR NATIONAL GUARD (HIANG) F-22 PLUS UP
ADD EGRESS SHOP

UTILITY PROFILES

SHEET ID

CU201

REVISED FINAL SUBMITTAL

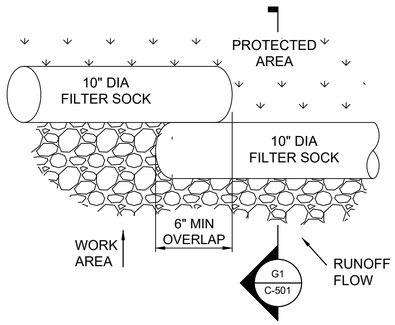

L1 FILTER SOCK
NOT TO SCALE

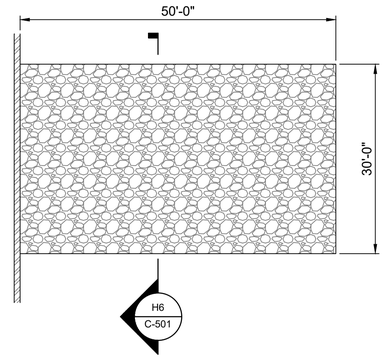

L6 CONSTRUCTION INGRESS/EGRESS
NOT TO SCALE

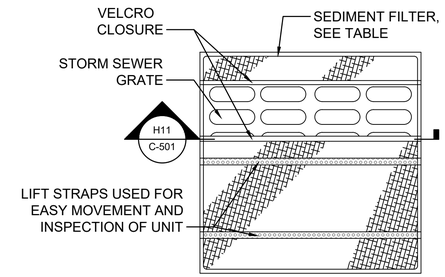

MECHANICAL PROPERTIES	TEST METHODS	UNITS	MARV
GRAB TENSILE STRENGTH	ASTM D 4632	kN (lbs)	1.62 (365) X 0.89 (200)
GRAB TENSILE ELONGATION	ASTM D 4632	%	24 X 10
PUNCTURE STRENGTH	ASTM D 4633	kN (lbs)	0.40 (90)
MULLEN BURST STRENGTH	ASTM D 3786	kPa (psi)	3097 (450)
TRAPEZOID TEAR STRENGTH	ASTM D 4533	kN (lbs)	0.51 (115) X 0.33 (75)
UV RESISTANCE	ASTM D 4355	%	90
APPARENT OPENING SIZE	ASTM D 4751	Mm (US Std Sieve)	0.425 (40)
FLOW RATE	ASTM D 4491	1 / min/m² (gal/min/ft)²	5907 (145)
PERMITTIVITY	ASTM D 4491	See[1]	2.1

L11 DRAIN INLET PROTECTION
NOT TO SCALE

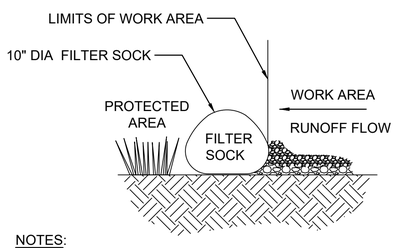

NOTES:

1. STAKING NOT REQUIRED.
2. FILTER SOCKS MUST BE FILLED WITH MULCH.
3. REMOVE SEDIMENT WHEN DEPTH REACHES 1/3 THE HEIGHT OF THE FILTER SOCK.

G1 FILTER SOCK SECTION
NOT TO SCALE

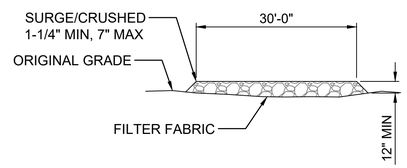

H6 CONSTRUCTION INGRESS/EGRESS SECTION
NOT TO SCALE

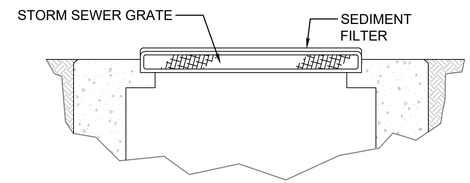

H11 DRAIN INLET PROTECTION SECTION
NOT TO SCALE

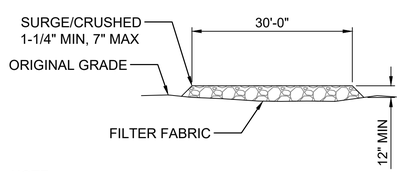

NOTE:
1. LOCATION, LENGTH, AND ROTATION OF ROADWAY VARIES.

D1 CONSTRUCTION ACCESS ROADWAY
NOT TO SCALE

US Army Corps of Engineers®

MARK	DESCRIPTION	DATE

DESIGNED BY: J. LOWE
DRAWN BY: T. CRIST
CHECKED BY: M. UNTEN
SUBMITTED BY:
SIZE: ANSI D
ISSUE DATE: OCT 15, 2025
SOLICITATION NO.: W9128A22F0002
CONTRACT NO.: W9128A19D0012

U.S. ARMY CORPS OF ENGINEERS
HONOLULU DISTRICT
FORT SHAFTER, HAWAII

COFFMAN ENGINEERS
745 FORT STREET, SUITE 400
HONOLULU, HAWAII 96813

JOINT BASE PEARL HARBOR-HICKAM, OAHU, HAWAII
FY22 HAWAII AIR NATIONAL GUARD (HIANG) F-22 PLUS UP
ADD EGRESS SHOP

EROSION AND SEDIMENT CONTROL DETAILS

SHEET ID
C-501

REVISED FINAL SUBMITTAL

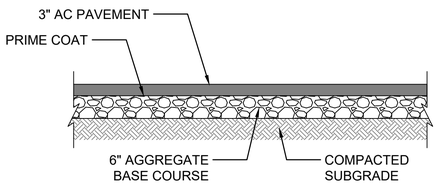

M1 AC PAVEMENT
SCALE NTS

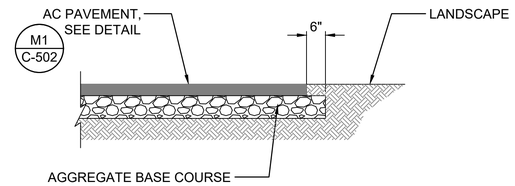

M6 AC PAVEMENT TO LANDSCAPE
SCALE NTS

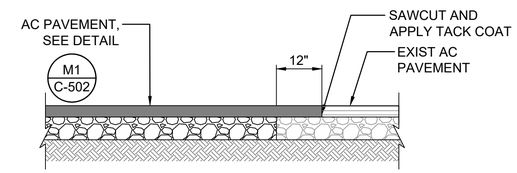

M11 AC PAVEMENT TO EXISTING
SCALE NTS

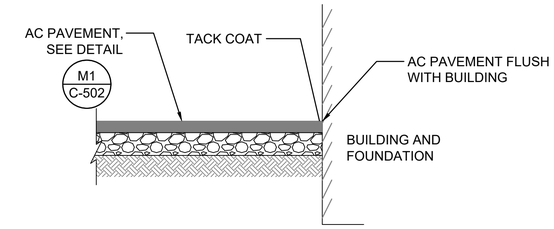

M16 AC PAVEMENT TO BUILDING
SCALE NTS

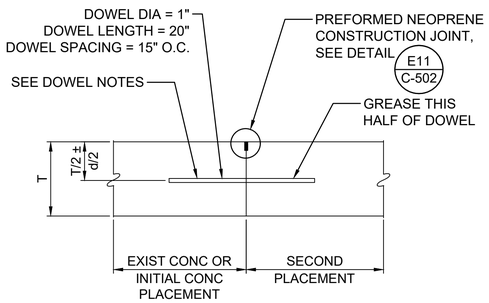

H1 TYPE D DOWELED CONSTRUCTION JOINT
NOT TO SCALE

DOWEL INSTALLATION NOTES:

1. DOWEL INSERTERS SHALL NOT BE USED.
2. DRILLING METHOD SHALL MAINTAIN DRILL HOLES PARALLEL TO CONCRETE SURFACE AND NORMAL TO JOINT LINE WITHIN THE SPECIFIED TOLERANCES. USE GANG DRILL WITH 3 OR MORE DRILLS. DRILL HOLE MAXIMUM DEVIATION SHALL NOT EXCEED 1" HORIZONTAL. HOLE DIAMETER TO BE APPROXIMATELY 1/8" LARGER THAN DOWEL.
3. AFTER DRILLING IS COMPLETE, AND PRIOR TO INSTALLATION OF DOWELS, THOROUGHLY CLEAN HOLES BY FLUSHING, ALLOW TO AIR DRY, AIR BLOW TO REMOVE DRILLING DUST, CONCRETE CHIPS, AND ANY MATERIAL DETRIMENTAL TO DEVELOPING BOND.
4. INSERT EPOXY INTO BACK OF DOWEL HOLE BY INJECTION NOZZLE WITH SUFFICIENT EPOXY PLACED SO A SLIGHT AMOUNT IS FORCED OUT WHEN DOWEL IS INSERTED AND TAPPED INTO CORRECT POSITION. EPOXY SHALL BE SOLID AROUND BARS WITH NO VOIDS. INSTALL PLASTIC DOWEL RINGS TO RETAIN EPOXY. SUBMIT PROPOSED EPOXY INFORMATION FOR APPROVAL PRIOR TO STARTING WORK.
5. "T" = THICKNESS OF NEW CONCRETE PAVEMENT. EXISTING CONCRETE CAN BE THICKER THAN NEW CONCRETE. SAWCUT FULL-DEPTH VERTICAL FACE WHERE NEW CONCRETE MEETS EXISTING CONCRETE.
6. "d" = DOWEL OR DIAMETER.
7. CONTRACTOR SHALL RETAIN DRILLING MANUFACTURER'S REPRESENTATIVE TO TRAIN THE DRILLING CREW AND MAKE ADDITIONAL ADJUSTMENTS TO THE COMPRESSOR AND DRILL RIG TO PRODUCE DRILL HOLES WITH MINIMAL EDGE SPALLING EQUIVALENT TO VERTICAL HOLES DRILLED WITH ROTARY CORE EQUIPMENT TO OBTAIN CORES TO DETERMINE PAVEMENT THICKNESS. MAXIMUM SPALLING ON FACE IS 1/2 INCH FROM HOLE WALL; MAXIMUM SPALL DEPTH INTO HOLE FROM FACE IS 1/4 INCH. CONTRACTOR SHALL HAVE ON-SITE MULTIPLE DRILL BIT TYPES INCLUSIVE BUT NOT LIMITED TO CHISEL AND CROSS OR STAR BITS. THE CONTRACTOR ALONG WITH THE MANUFACTURER'S REPRESENTATIVE SHALL USE DIFFERENT BITS AND DRILLING TECHNIQUES TO MEET THE REQUIREMENTS AS DISCUSSED.

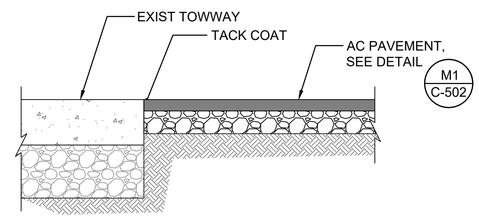

H11 AC PAVEMENT TO EXIST TOWWAY
SCALE NTS

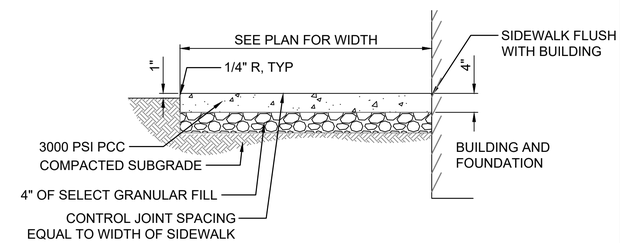

H16 SIDEWALK
SCALE NTS

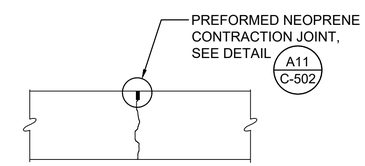

E1 TYPE C SAWED CONTRACTION JOINT
NOT TO SCALE

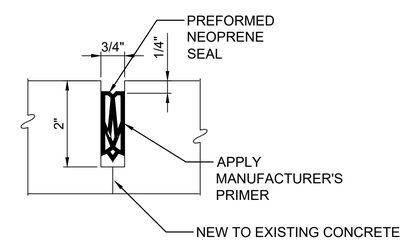

E11 PREFORMED NEOPRENE CONSTRUCTION JOINT DETAIL
NOT TO SCALE

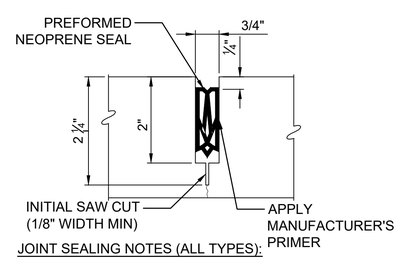

JOINT SEALING NOTES (ALL TYPES):

1. CONDUCT INITIAL AND SECOND SAW CUTS, CLEANING AND SEAL INSTALLATION PER SECTIONS 32 01 19.61 AND 32 13 73.19.

A11 PREFORMED NEOPRENE CONTRACTION JOINT DETAIL
NOT TO SCALE

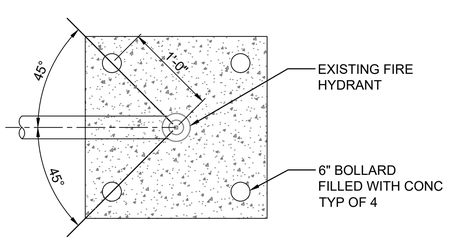

PLAN

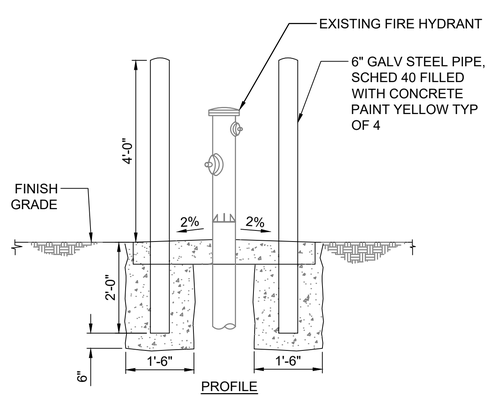

PROFILE

A1 CONCRETE BOLLARDS AT EXISTING FIRE HYDRANT (BID OPTION)
NOT TO SCALE

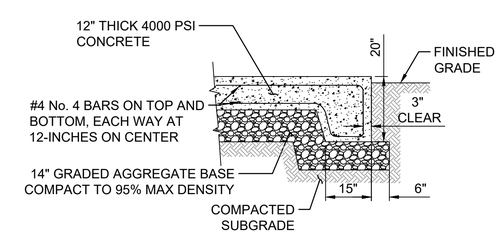

A16 AGE PAD (BID OPTION)
NOT TO SCALE

US Army Corps of Engineers®

MARK	DESCRIPTION	DATE

DESIGNED BY: J. LOWE
DRAWN BY: T. CRIST
CHECKED BY: M. UNTEN
SUBMITTED BY:
SIZE: ANSI D
ISSUE DATE: OCT 15, 2025
SOLICITATION NO.: W9128A22F0002
CONTRACT NO.: W9128A19D0012

U.S. ARMY CORPS OF ENGINEERS
HONOLULU DISTRICT
FORT SHAFTER, HAWAII

COFFMAN ENGINEERS
745 FORT STREET, SUITE 400
HONOLULU, HAWAII 96813

JOINT BASE PEARL HARBOR-HICKAM, OAHU, HAWAII
FY22 HAWAII AIR NATIONAL GUARD (HIANG) F-22 PLUS UP
ADD EGRESS SHOP

SITE DETAILS

SHEET ID
C-502

REVISED FINAL SUBMITTAL

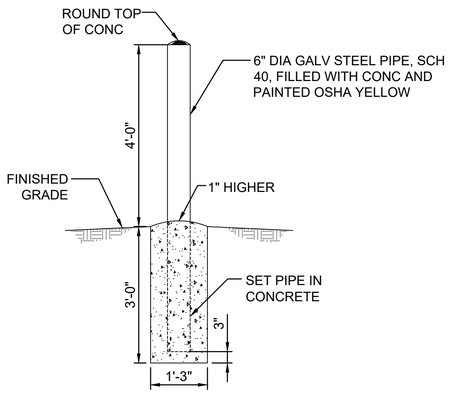

K1 BOLLARD

SCALE: NTS

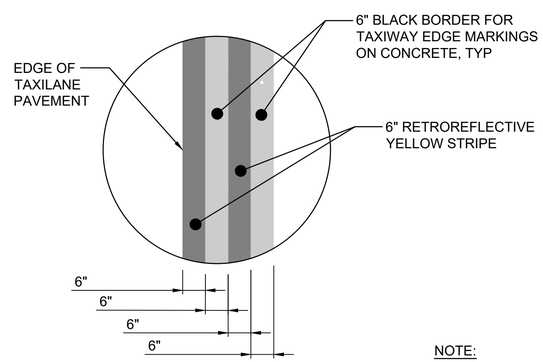

NOTE:

NEW MARKINGS TO MATCH EXISTING MARKINGS AND EXTEND 25 FEET PAST THE LIMITS OF RECONSTRUCTION.

F1 TAXIWAY TAXILINE/EDGE STRIPE

SCALE: NTS

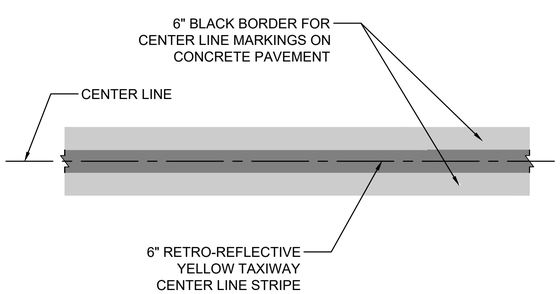

A1 TAXIWAY CENTERLANE MARKING

SCALE: NTS

US Army Corps of Engineers®

MARK	DESCRIPTION	DATE

DESIGNED BY: J. LOWE
DRAWN BY: T. CRIST
CHECKED BY: M. UNTEN
SUBMITTED BY:
SIZE: ANSI D
ISSUE DATE: OCT 15, 2025
SOLICITATION NO.: W9128A22F0002
CONTRACT NO.: W9128A19D0012

U.S. ARMY CORPS OF ENGINEERS
HONOLULU DISTRICT
FORT SHAFTER, HAWAII

COFFMAN ENGINEERS
745 FORT STREET, SUITE 400
HONOLULU, HAWAII 96813

JOINT BASE PEARL HARBOR-HICKAM, OAHU, HAWAII
FY22 HAWAII AIR NATIONAL GUARD (HIANG) F-22 PLUS UP
ADD EGRESS SHOP

SITE DETAILS

SHEET ID

C-503

REVISED FINAL SUBMITTAL

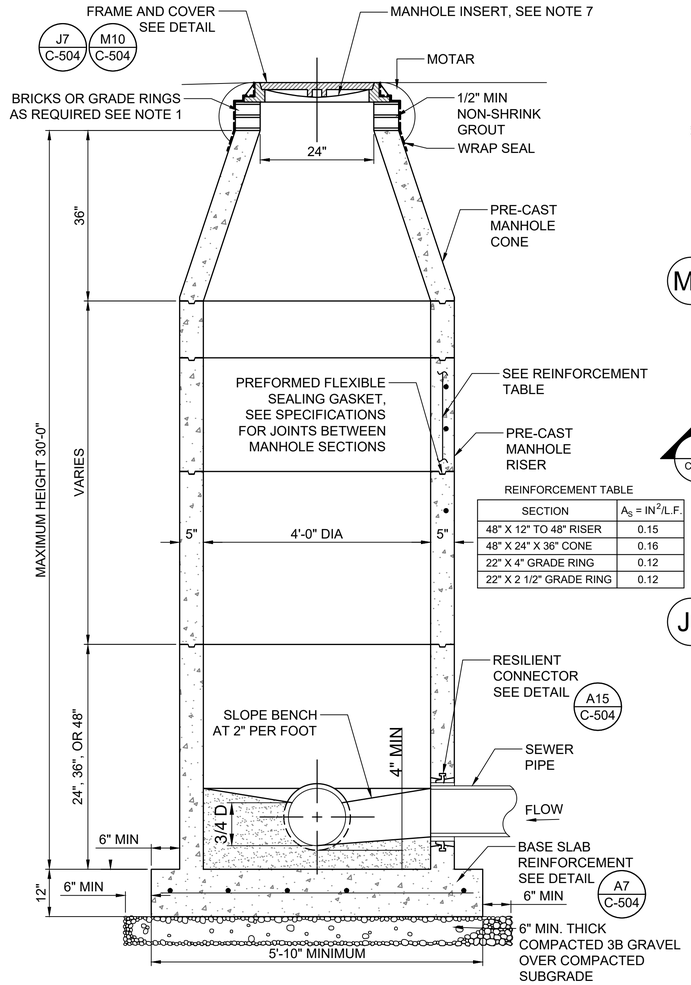

REINFORCEMENT TABLE

SECTION	A_S = IN^2/L.F.
48" X 12" TO 48" RISER	0.15
48" X 24" X 36" CONE	0.16
22" X 4" GRADE RING	0.12
22" X 2 1/2" GRADE RING	0.12

NOTES:

1. APPLY GROUT TO INSIDE AND OUTSIDE OF BRICKS TO FORM CONTINUOUS CYLINDRAL SURFACE. TOTAL GRADE ADJUSTMENT SHALL NOT BE MORE THAN 6 INCHES USING GRADE RINGS AND BRICKS COMBINATION.
2. SEE SMH NOTES AND REINFORCEMENTS TABLE.
3. FOR MANHOLE CHANNELIZATION, SEE K16/C-503.
4. TOP OF MANHOLE SHALL BE FLUSH WITH THE FINISH GRADE IN PAVED AREA.
5. CENTERLINE OF MANHOLE IS GRADE POINT FOR SEWER LINES.
6. MANHOLE CHANNEL SLOPE SHALL FOLLOW THE PIPE SLOPE INDICATED ON PROFILES.
7. ALL MANHOLE CONNECTIONS SHALL BE WATERTIGHT.
8. MANHOLE FRAMES SHALL BE SECURELY INSTALLED IN A BED OF MORTAR.
9. STEEL BARS AND SHAPES SHALL BE IN ACCORDANCE TO ASTM A 36.
10. PRE-CAST SECTIONS SHALL CONFORM TO ASTM C478.
11. IF SOFT AND/OR LOOSE MATERIAL IS ENCOUNTERED IN THE TRENCH BOTTOM BELOW THE MANHOLE BASE, PROVIDE A STABILIZATION LAYER OF 24-INCHES OF NO. 2 ROCK WRAPPED IN NON-WOVEN GEOTEXTILE BELOW THE COMPACTED GRAVEL LAYER.

A1 PRECAST SEWER MANHOLE
NOT TO SCALE

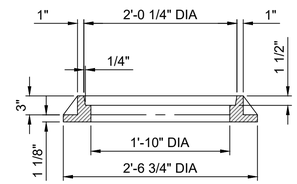

M7 SMH FRAME SECTION
NOT TO SCALE

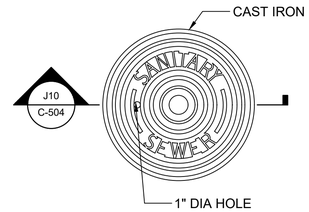

M10 SMH COVER PLAN
NOT TO SCALE

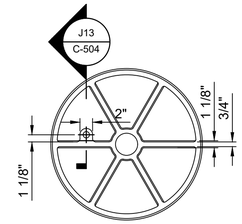

J13 SMH COVER BOTTOM
NOT TO SCALE

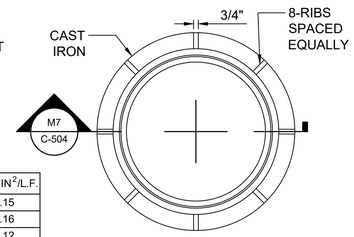

J7 SMH FRAME PLAN
NOT TO SCALE

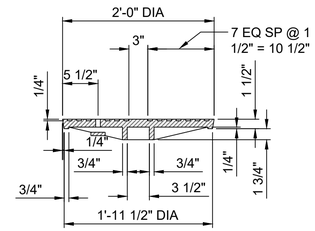

J10 SMH COVER SECTION - A
NOT TO SCALE

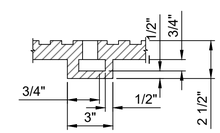

J13 SMH COVER SECTION - B
NOT TO SCALE

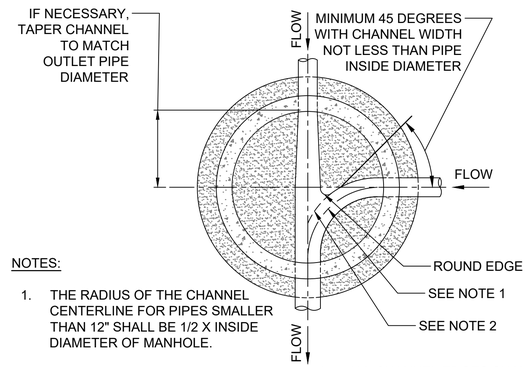

NOTES:

1. THE RADIUS OF THE CHANNEL CENTERLINE FOR PIPES SMALLER THAN 12" SHALL BE 1/2 X INSIDE DIAMETER OF MANHOLE.
2. THE RADIUS OF OUTER CHANNEL WALL FOR PIPES 12" AND LARGER SHALL BE 1/2 X INSIDE DIAMETER OF MANHOLE.
3. ALL CHANNEL EDGES SHALL BE PROVIDED WITH SMOOTH ROUNDED EDGES.

K16 CHANNELIZATION DETAIL
NOT TO SCALE

NOTES:

1. INSTALL TRACER WIRE OVER CENTER LINE OF PIPE AT A MINIMUM DEPTH OF 2 FEET AND A MAXIMUM DEPTH OF 3 FEET FROM FINISH GRADE.
2. INSTALL TRACER WIRE AT A MINIMUM CLEARANCE OF 6-INCHES ABOVE THE PIPE.
3. PROVIDE NON-WOVEN GEOTEXTILE FABRIC WRAP AROUND BEDDING MATERIAL WHEN PIPE IS LOCATED BELOW WATER TABLE.
4. PROVIDE STABILZATION LAYER OF 24-INCHES OF NO. 2 ROCK WRAPPED IN NON-WOVEN GEOTEXTILE BELOW BEDDING LAYER IF SOFT OR LOOSE DEPOSITS ENCOUNTERED IN TRENCH BOTTOM.

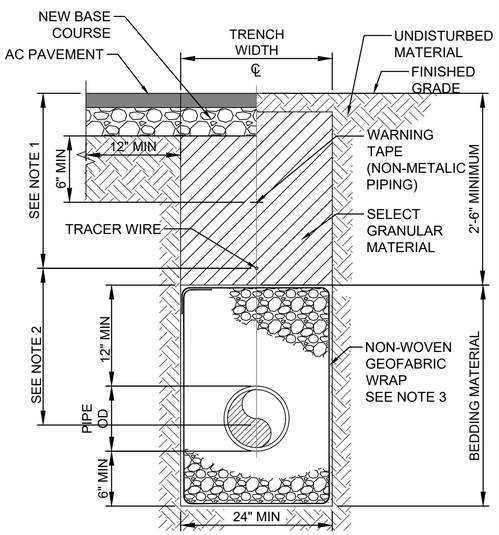

D15 SEWER LINE TRENCH
SCALE: NTS

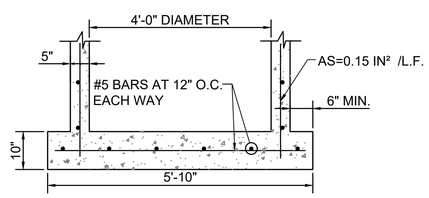

A7 BASE SLAB REINFORCEMENT
NOT TO SCALE

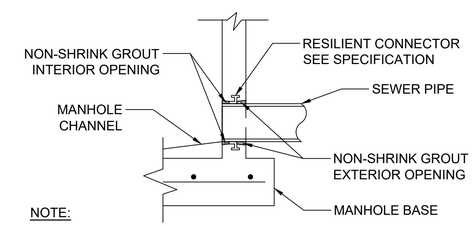

NOTE:

1. INSTALL RESILIENT CONNECTOR PER MANUFACTURER RECOMMENDATIONS.

A15 RESILIENT CONNECTOR
NOT TO SCALE

US Army Corps of Engineers®

MARK	DESCRIPTION	DATE

DESIGNED BY: J. LOWE
DRAWN BY: T. CRIST
CHECKED BY: M. UNTEN
SUBMITTED BY:
SIZE: ANSI D
ISSUE DATE: OCT 15, 2025
SOLICITATION NO.: W9128A22F0002
CONTRACT NO.: W9128A19D0012

U.S. ARMY CORPS OF ENGINEERS
HONOLULU DISTRICT
FORT SHAFTER, HAWAII

COFFMAN ENGINEERS
745 FORT STREET, SUITE 400
HONOLULU, HAWAII 96813

JOINT BASE PEARL HARBOR-HICKAM, OAHU, HAWAII
FY22 HAWAII AIR NATIONAL GUARD (HIANG) F-22 PLUS UP
ADD EGRESS SHOP

UTILITY DETAILS

SHEET ID
C-504

REVISED FINAL SUBMITTAL

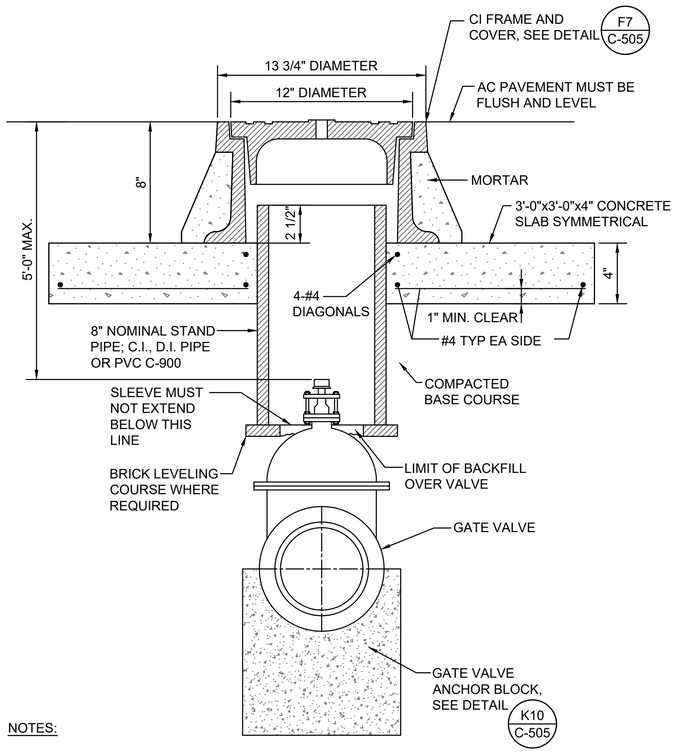

NOTES:

1. PROVIDE 12" DIAMETER COVER C.I. VALVE BOX ON 4" TO 12" BURIED VALVES. WEIGHT OF COVER MUST BE A MINIMUM OF 45 POUNDS AND FRAME MUST BE A MINIMUM 80 POUNDS.
2. THE LIMIT OF THE PIPE CUSHION BACKFILL AROUND THE VALVE MUST BE THE TRENCH WIDTH x 4 FEET ON EACH SIDE OF VALVE AND FILL TO 8" BELOW FINISH GRADE.

F1 C.I. VALVE BOX DETAIL - 4" TO 12" VALVES

SCALE: NTS

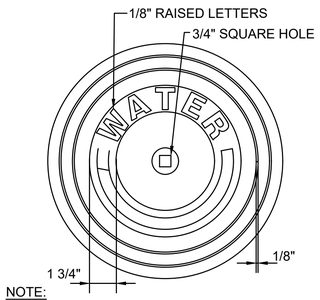

NOTE:

ALL CASTINGS MUST BE MADE ACCURATELY TO THE DIMENSIONS SHOWN. SEAT AND COVER MUST BE MACHINED, NOT GROUND TO SECURE FLAT AND TRUE SURFACES. THE COVER MUST NOT RATTLE IN ANY POSITION.

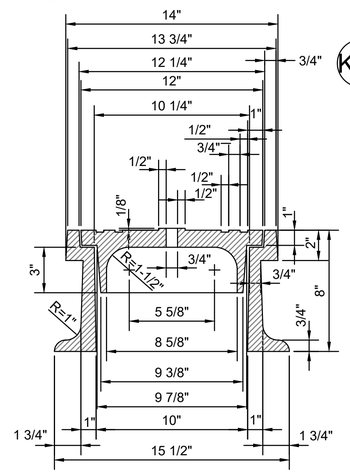

F7 CAST IRON FRAME & COVER

SCALE: NTS

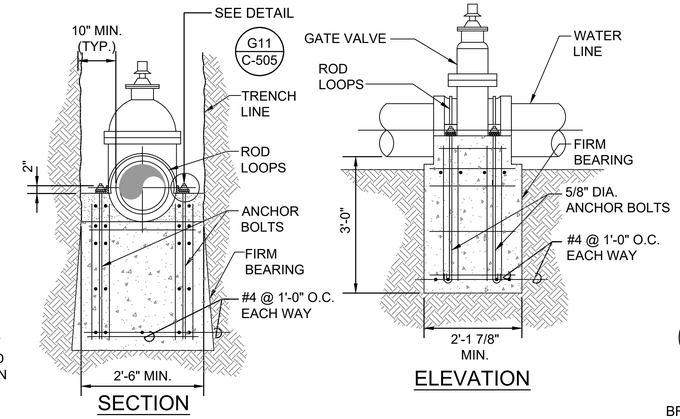

K10 GATE VALVE ANCHOR BLOCK

SCALE: NTS

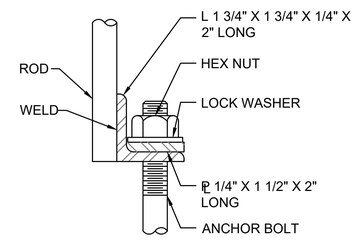

G11 GATE VALVE ANCHOR BOLT CONNECTION

SCALE: NTS

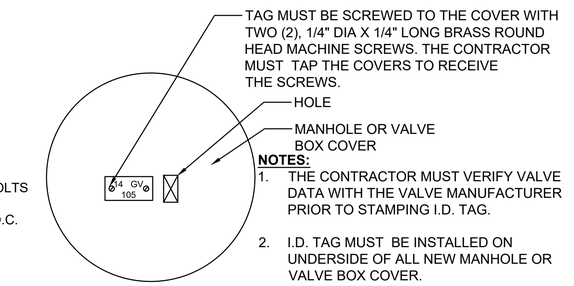

NOTES:

1. THE CONTRACTOR MUST VERIFY VALVE DATA WITH THE VALVE MANUFACTURER PRIOR TO STAMPING I.D. TAG.
2. I.D. TAG MUST BE INSTALLED ON UNDERSIDE OF ALL NEW MANHOLE OR VALVE BOX COVER.

L16 VALVE TAG COVER

SCALE: NTS

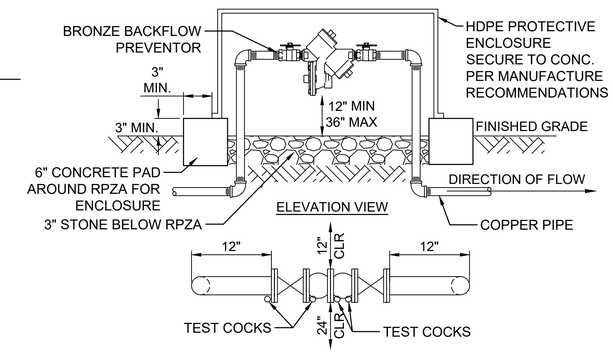

G16 REDUCED PRESSURE BACKFLOW PREVENTER

SCALE: NTS

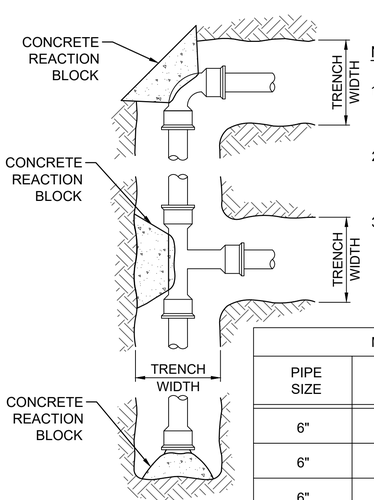

NOTES:

1. CONCRETE REACTION BLOCKS MUST BE INSTALLED AT ALL TEES AND BENDS.
2. THE TABLE BELOW IS BASED ON AN ASSUMED PRESSURE OF 225 PSI.
3. CONCRETE MUST BE 2500 PSI AND POURED AGAINST UNDISTURBED EARTH.

MINIMUM BEARING FACE AREA

PIPE SIZE	FITTINGS	AREA SQUARE FEET	SOIL TYPE
6"	TEE/CAPS	3.5	TYPE D 250 PSI SOIL
6"	1/4 BENDS	5.0	TYPE D 250 PSI SOIL
6"	1/8 BENDS	3.0	TYPE D 250 PSI SOIL

A1 HORIZONTAL CONCRETE THRUST BLOCKS

SCALE: NTS

NOTES:

1. INSTALL TRACER WIRE OVER CENTER LINE OF PIPE AT A MINIMUM DEPTH OF 2 FEET AND A MAXIMUM DEPTH OF 3 FEET FROM FINISH GRADE.
2. INSTALL TRACER WIRE AT A MINIMUM CLEARANCE OF 6-INCHES ABOVE THE PIPE.
3. PROVIDE NON-WOVEN GEOTEXTILE FABRIC WRAP AROUND BEDDING MATERIAL WHEN PIPE IS LOCATED BELOW WATER TABLE.
4. PROVIDE STABILZATION LAYER OF 24-INCHES OF NO. 2 ROCK WRAPPED IN NON-WOVEN GEOTEXTILE BELOW BEDDING LAYER IF SOFT OR LOOSE DEPOSITS ENCOUNTERED IN TRENCH BOTTOM.

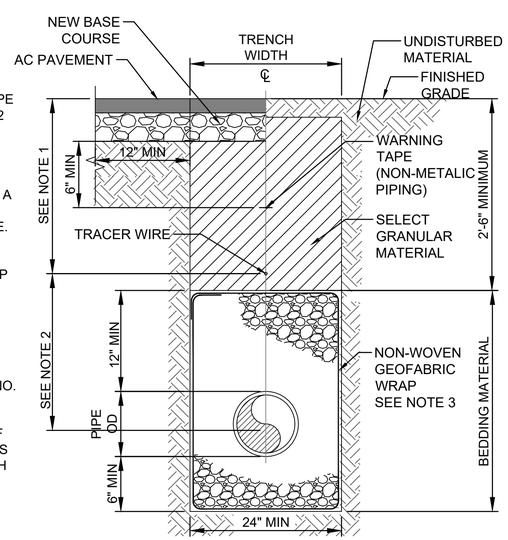

A8 WATER LINE TRENCH

SCALE: NTS

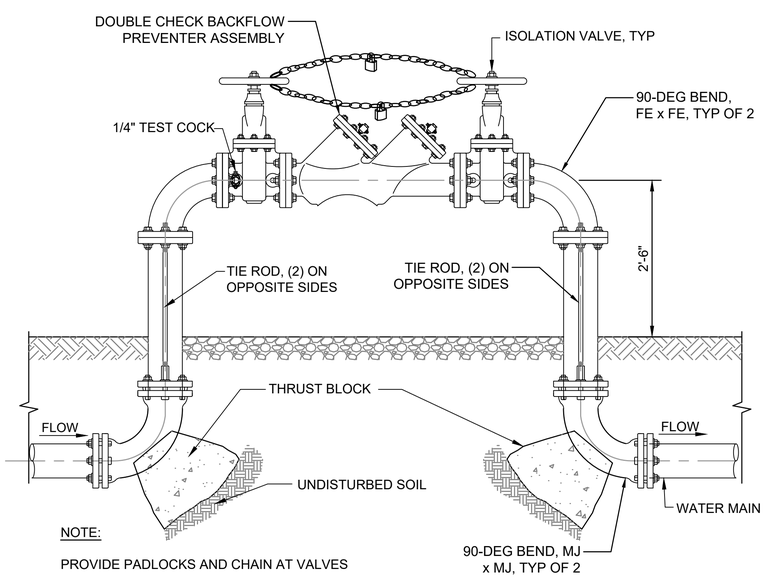

NOTE:

PROVIDE PADLOCKS AND CHAIN AT VALVES

A14 DOUBLE CHECK BACKFLOW PREVENTOR

SCALE: NTS

US Army Corps of Engineers®

MARK	DESCRIPTION	DATE

DESIGNED BY: J. LOWE
DRAWN BY: T. CRIST
CHECKED BY: M. UNTEN
SUBMITTED BY:
SIZE: ANSI D
ISSUE DATE: OCT 15, 2025
SOLICITATION NO.: W9128A22F0002
CONTRACT NO.: W9128A19D0012

U.S. ARMY CORPS OF ENGINEERS
HONOLULU DISTRICT
FORT SHAFTER, HAWAII

COFFMAN ENGINEERS
745 FORT STREET, SUITE 400
HONOLULU, HAWAII 96813

JOINT BASE PEARL HARBOR-HICKAM, OAHU, HAWAII
FY22 HAWAII AIR NATIONAL GUARD (HANG) F-22 PLUS UP
ADD EGRESS SHOP

UTILITY DETAILS

SHEET ID
C-505

REVISED FINAL SUBMITTAL

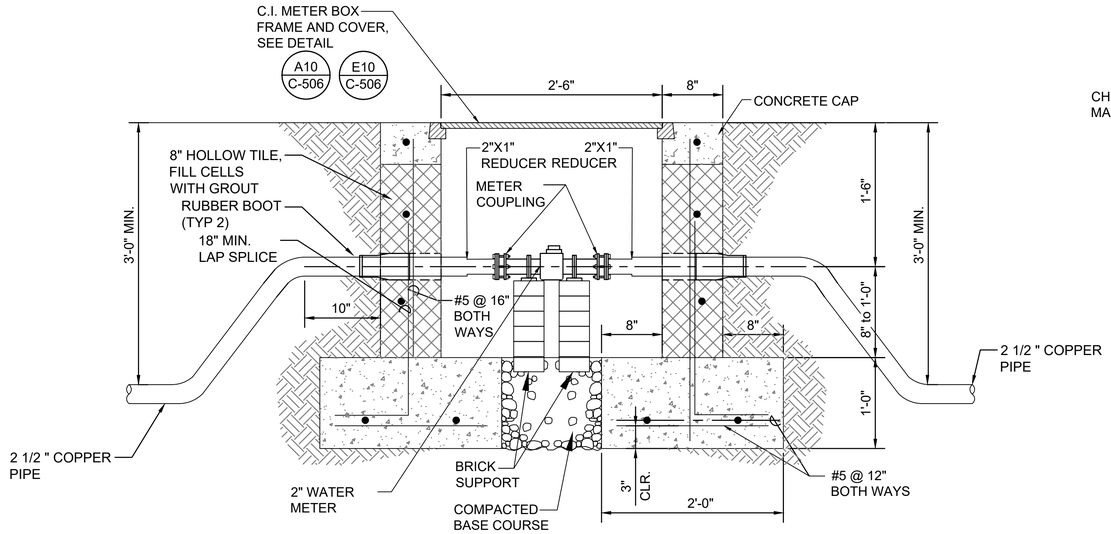

J1 WATER METER ASSEMBLY AND BOX SECTION

SCALE: NTS

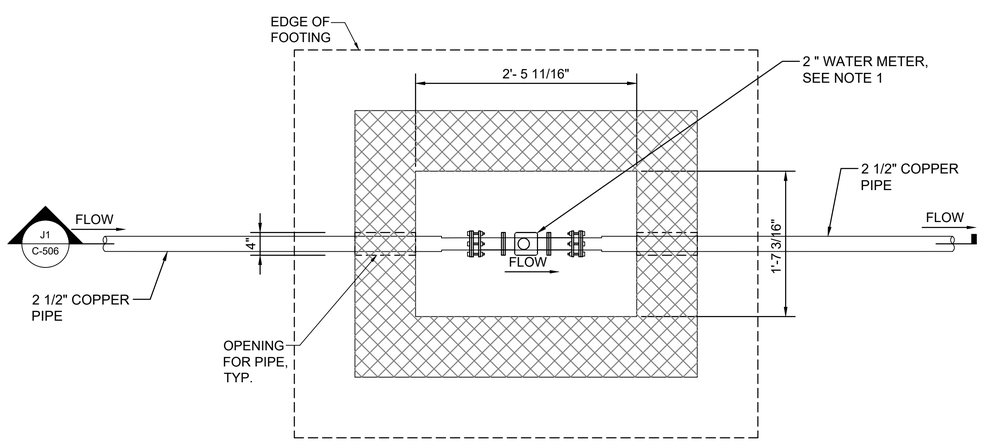

NOTES:

1. REFER TO SPECIFICATIONS FOR WATER METER INFORMATION.
2. BACKFILL BEHIND CMU WALL SHALL BE ONSITE OR IMPORTED GRANULAR FILL AND SHALL BE PLACED IN 6" LIFTS AND COMPACTED TO AT LEAST 95 PERCENT OF ITS MAXIMUM DRY DENSITY IN ACCORDANCE WITH ASTM D1557.
3. NO. 4 BOND BEAM AT BOTTOM, TOP AND MIDDLE OF WALL.
4. JOINT FITTINGS TO BE SOLDER-TYPE.

A1 WATER METER ASSEMBLY AND BOX

SCALE: NTS

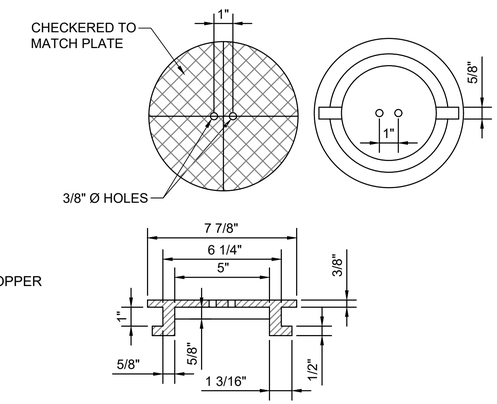

K11 METER READING COVER

SCALE: NTS

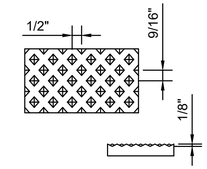

L15 CHECKERED PATTERN SECTION

SCALE: NTS

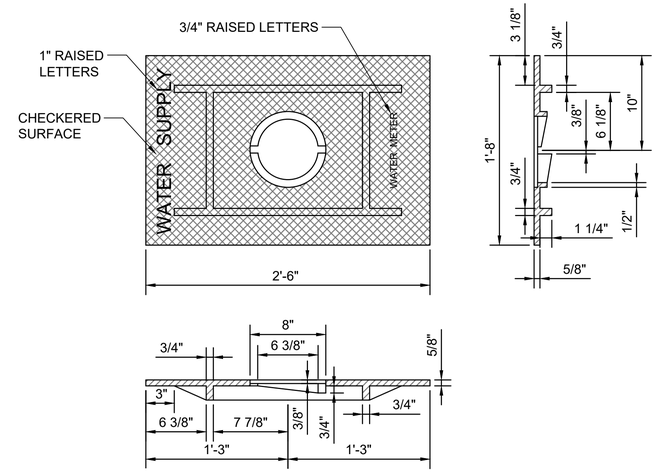

E10 METER BOX COVER

SCALE: NTS

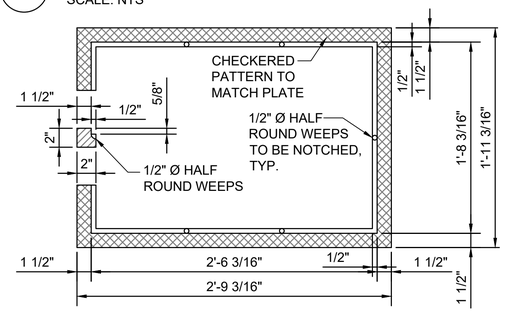

NOTE:

THICKNESS DIMENSIONS ARE NET.
ADD 1/8" FOR RAISED SURFACE.

A10 METER BOX FRAME

SCALE: NTS

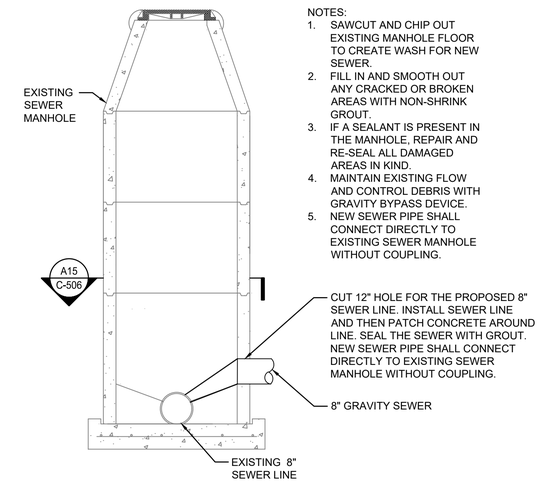

NOTES:

1. SAWCUT AND CHIP OUT EXISTING MANHOLE FLOOR TO CREATE WASH FOR NEW SEWER.
2. FILL IN AND SMOOTH OUT ANY CRACKED OR BROKEN AREAS WITH NON-SHRINK GROUT.
3. IF A SEALANT IS PRESENT IN THE MANHOLE, REPAIR AND RE-SEAL ALL DAMAGED AREAS IN KIND.
4. MAINTAIN EXISTING FLOW AND CONTROL DEBRIS WITH GRAVITY BYPASS DEVICE.
5. NEW SEWER PIPE SHALL CONNECT DIRECTLY TO EXISTING SEWER MANHOLE WITHOUT COUPLING.

E16 EXISTING SEWER MANHOLE TIE IN

SCALE: NTS

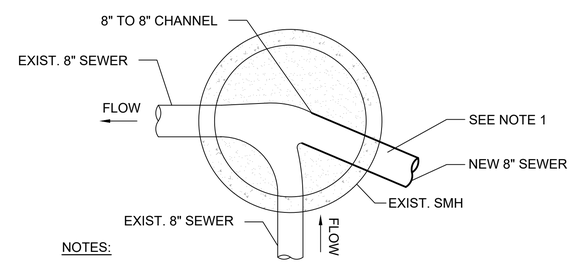

NOTES:

1. THE RADIUS OF THE CHANNEL CENTERLINE FOR PIPES SMALLER THAN 12" SHALL BE 1/2 X INSIDE DIAMETER OF MANHOLE.
2. ALL CHANNEL EDGES SHALL BE PROVIDED WITH SMOOTH ROUNDED EDGES.

A15 RE-CHANNELIZATION DETAIL

SCALE: NTS

US Army Corps of Engineers®

MARK	DESCRIPTION	DATE

DESIGNED BY: J. LOWE
DRAWN BY: T. CRIST
CHECKED BY: M. UNTEN
SUBMITTED BY:
SIZE: ANSI D
ISSUE DATE: OCT 15, 2025
SOLICITATION NO.: W9128A22F0002
CONTRACT NO.: W9128A19D0012

U.S. ARMY CORPS OF ENGINEERS
HONOLULU DISTRICT
FORT SHAFTER, HAWAII

COFFMAN ENGINEERS
745 FORT STREET, SUITE 400
HONOLULU, HAWAII 96813

JOINT BASE PEARL HARBOR-HICKAM, OAHU, HAWAII
FY22 HAWAII AIR NATIONAL GUARD (HIANG) F-22 PLUS UP
ADD EGRESS SHOP

UTILITY DETAILS

SHEET ID
C-506

REVISED FINAL SUBMITTAL

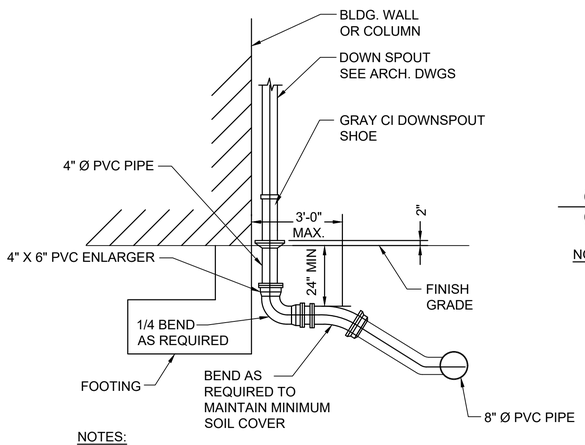

NOTES:

1. VERIFY PIPE CAN BE INSTALLED AS SHOWN TO PROVIDE PIPE SLOPES AS INDICATED ON PLAN. ADJUSTMENT TO FIT FIELD CONDITIONS SHALL MAINTAIN A MINIMUM PIPE SLOPE OF 1 PERCENT.

2. SEE STRUCTURAL DRAWINGS AND CONFIRM DOWNSPOUT DRAIN LINE CAN BE INSTALLED AS INDICATED. WHERE FIELD CONDITIONS REQUIRE PIPE PENETRATION THROUGH FOOTING TO ACHIEVE MINIMUM PIPE COVER AND SLOPE, OBTAIN APPROVAL FROM THE CONTRACTING OFFICER PRIOR TO INSTALLATION AND PROVIDE A PIPE SLEEVE THROUGH THE FOOTING.

H1 DOWNSPOUT TO DRAIN LINE CONNECTION

SCALE: NTS

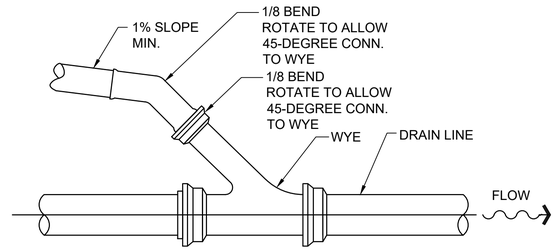

NOTE:

TO REDUCE EXCAVATION DEPTH, CONNECTION TO DRAIN LINES MAY BE INSTALLED AS INDICATED PROVIDED MINIMUM SOIL COVER OF 30" (NON-VEHICULAR TRAFFIC AREA) AND 36" (VEHICULAR TRAFFIC AREA) IS MAINTAINED.

ALTERNATIVE CONN. TO DRAIN LINE

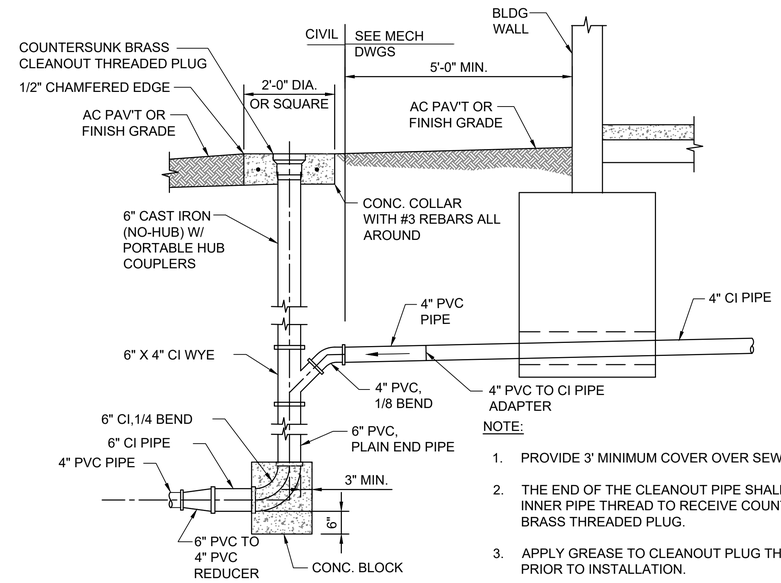

NOTE:

1. PROVIDE 3' MINIMUM COVER OVER SEWER.

2. THE END OF THE CLEANOUT PIPE SHALL HAVE AN INNER PIPE THREAD TO RECEIVE COUNTERSUNK BRASS THREADED PLUG.

3. APPLY GREASE TO CLEANOUT PLUG THREADS PRIOR TO INSTALLATION.

4. STAMP CONCRETE COLLAR WITH "SSCO" AND DOWNSTREAM PIPE MATERIAL TYPE FOR FUTURE IDENTIFICATION.

5. SEWER CLEANOUT AND RISER SHALL BE CAST IRON (NO-HUB) WITH PORTABLE HUB COUPLERS.

H12 SEWER CLEANOUT CONNECTION AT BUILDING

SCALE: NTS

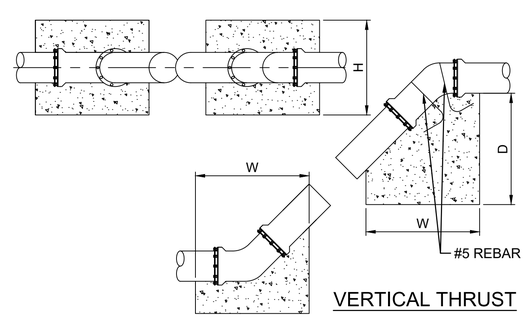

VERTICAL THRUST

SIZE	VERTICAL 1/8 BENDS			VERTICAL 1/8 BENDS BOTTOM			VERTICAL 1/4 BENDS			VERTICAL 1/4 BENDS BOTTOM		
	D	H	W	D	H	W	D	H	W	D	H	W
4"/6"	2'	2'	2'	1'	1'	1'	2'	3'	3'	1'	2'	2'

A10 VERTICAL CONCRETE THRUST BLOCK

SCALE: NTS

NOTES:

1. INSTALL TRACER WIRE OVER CENTER LINE OF PIPE AT A MINIMUM DEPTH OF 2 FEET AND A MAXIMUM DEPTH OF 3 FEET FROM FINISH GRADE.

2. INSTALL TRACER WIRE AT A MINIMUM CLEARANCE OF 6-INCHES ABOVE THE PIPE.

3. PROVIDE NON-WOVEN GEOTEXTILE FABRIC WRAP AROUND BEDDING MATERIAL WHEN PIPE IS LOCATED BELOW WATER TABLE.

4. PROVIDE STABILZATION LAYER OF 24-INCHES OF NO. 2 ROCK WRAPPED IN NON-WOVEN GEOTEXTILE BELOW BEDDING LAYER IF SOFT OR LOOSE DEPOSITS ENCOUNTERED IN TRENCH BOTTOM.

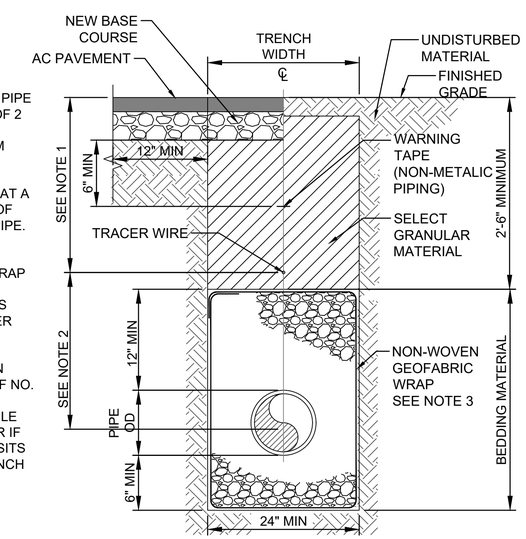

A15 DRAIN LINE TRENCH

SCALE: NTS

US Army Corps of Engineers®

MARK	DESCRIPTION	DATE

DESIGNED BY: J. LOWE
DRAWN BY: T. CRIST
CHECKED BY: M. UNTEN
SUBMITTED BY:
SIZE: ANSI D
ISSUE DATE: OCT 15, 2025
SOLICITATION NO.: W9128A22F0002
CONTRACT NO.: W9128A19D0012

U.S. ARMY CORPS OF ENGINEERS
HONOLULU DISTRICT
FORT SHAFTER, HAWAII

COFFMAN ENGINEERS
745 FORT STREET, SUITE 400
HONOLULU, HAWAII 96813

JOINT BASE PEARL HARBOR-HICKAM, OAHU, HAWAII
FY22 HAWAII AIR NATIONAL GUARD (HIANG) F-22 PLUS UP
ADD EGRESS SHOP

UTILITY DETAILS

SHEET ID

C-507

REVISED FINAL SUBMITTAL

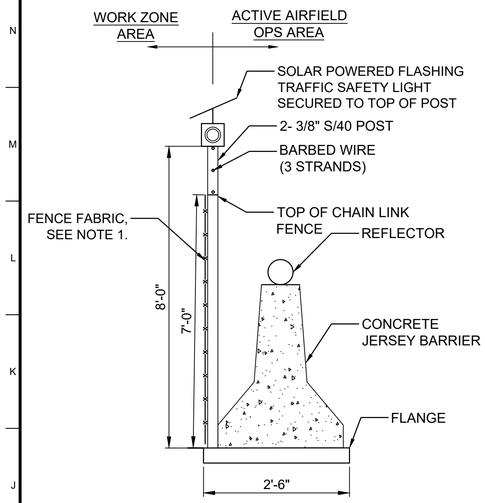

NOTES:

1. THE FENCE FABRIC FOR TEMPORARY SECURITY FENCING SHALL COMPLY WITH THE SPECIFICATIONS FOR CHAIN-LINK FENCING AS REFERENCED IN THE PLANS AND SPECIFICATIONS (SEE SECTION 32 31 13.53). IT ALSO SHALL HAVE A LAYER OF BROWN FABRIC TO SERVE AS A WIND BARRIER DURING CONSTRUCTION INSTALLED ON THE CONSTRUCTION SIDE OF FENCE.
2. THE POST ATTACHMENT METHODS SHOWN ARE RECOMMENDATIONS. THE CONTRACTOR MAY SUBMIT ADDITIONAL METHODS TO THE CONTRACTING OFFICER FOR APPROVAL.
3. CONTRACTOR SHALL BE RESPONSIBLE FOR FURNISHING ALL MATERIALS SHOWN IN CONTRACT DRAWINGS INCLUDING CONCRETE BARRIER RAILS.
4. THE CONTRACTOR MAY SUBMIT AN ALTERNATIVE FOD FENCE TO SET ON THE PAVEMENT. THE ALTERNATE SHALL NOT DAMAGE PAVEMENT AND SHALL BE CAPABLE OF WITHSTANDING 201 KPH WIND/JET BLAST. ALTERNATIVES MUST BE APPROVED BY THE CONTRACTING OFFICER PRIOR TO USE/INSTALLATION.

H1 BARRIER MOUNTED FOD FENCE

NOT TO SCALE

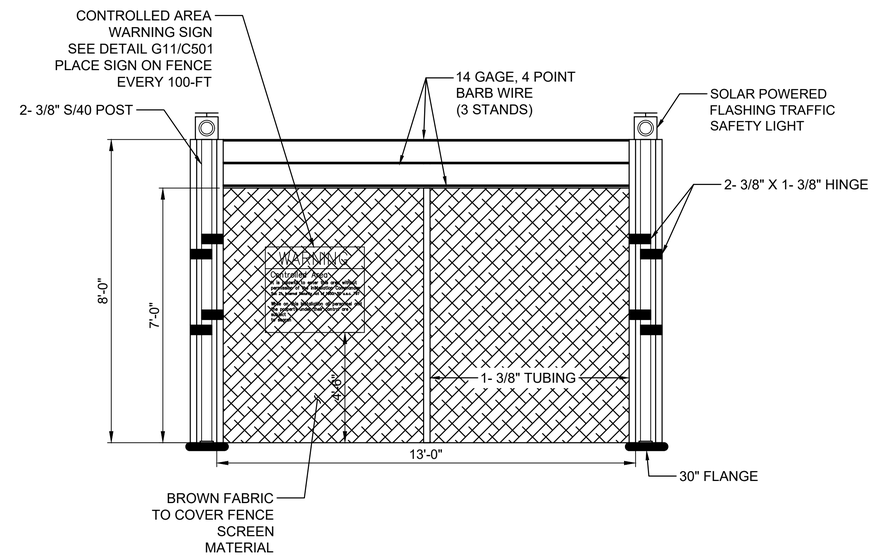

H8 BARRIER MOUNTED FOD FENCE ELEVATION

NOT TO SCALE

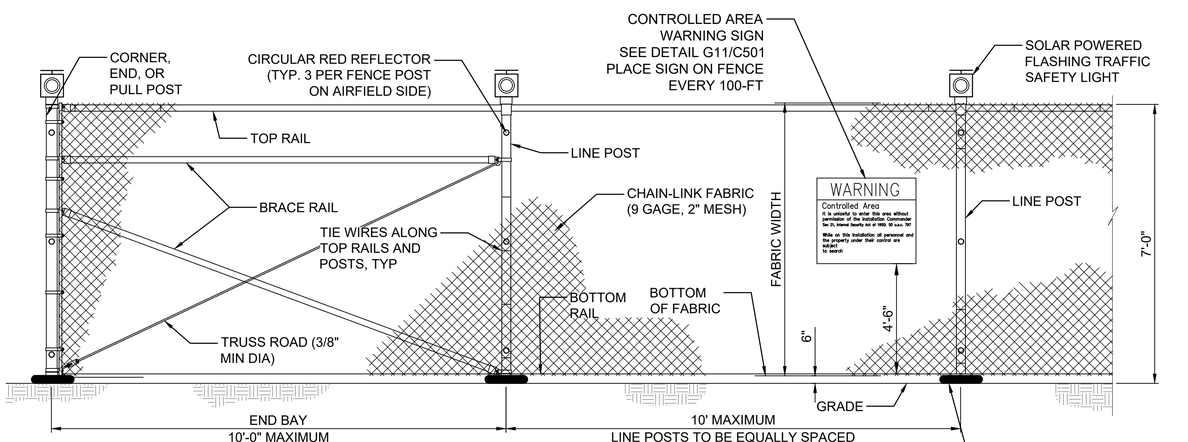

1. INSTALL FOD FENCE PRIOR TO BEGINNING DEMOLITION AT LOCATION APPROVED BY CONTRACTING OFFICER.
2. AFTER FOD FENCE IS REMOVED, PATCH ALL SURFACES DAMAGED BY INSTALLTION INCLUDING PERMANENT GRASSING TO THE SATISFACTION OF THE CONTRACTING OFFICER.
3. FOD FENCE SHALL BE CAPABLE OF WITHSTANDING 201 KPH WIND/JET BLAST.
4. DO NOT USE THIS DETAIL IN PAVEMENT.

STEEL POST SCHEDULE

USE AND SECTION	MINIMUM OUTSIDE DIMENSIONS (NOMINAL)
CORNER, END, AND PULL POST	2.875" OD
LINE POST	2.375" OD
TOP, BOTTOM, AND BRACE RAILS	1.66" OD

A1 FOD FENCE DETAILS (NON-PAVEMENT AREAS ONLY)

NOT TO SCALE

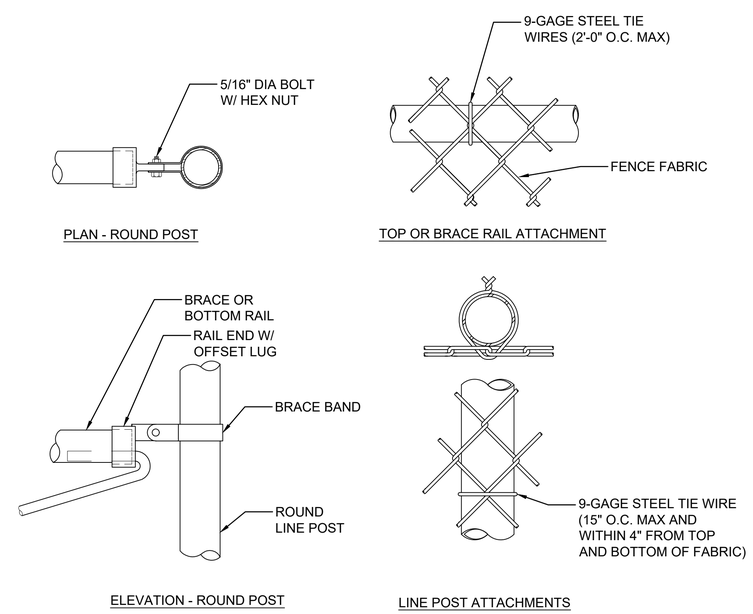

A13 LINE POST DETAILS

NOT TO SCALE

US Army Corps of Engineers®

MARK	DESCRIPTION	DATE

DESIGNED BY: J. LOWE
DRAWN BY: T. CRIST
CHECKED BY: M. UNTEN
SUBMITTED BY:
SIZE: ANSI-D
ISSUE DATE: OCT 15, 2025
SOLICITATION NO.: W9128A22F0002
CONTRACT NO.: W9128A19D0012

U.S. ARMY CORPS OF ENGINEERS
HONOLULU DISTRICT
FORT SHAFTER, HAWAII

COFFMAN ENGINEERS
745 FORT STREET, SUITE 400
HONOLULU, HAWAII 96813

JOINT BASE PEARL HARBOR-HICKAM, OAHU, HAWAII
FY22 HAWAII AIR NATIONAL GUARD (HANG) F-22 PLUS UP
ADD MUNITIONS CUBE STORAGE FACILITY

PHASING DETAILS

SHEET ID
C-508

REVISED FINAL SUBMITTAL

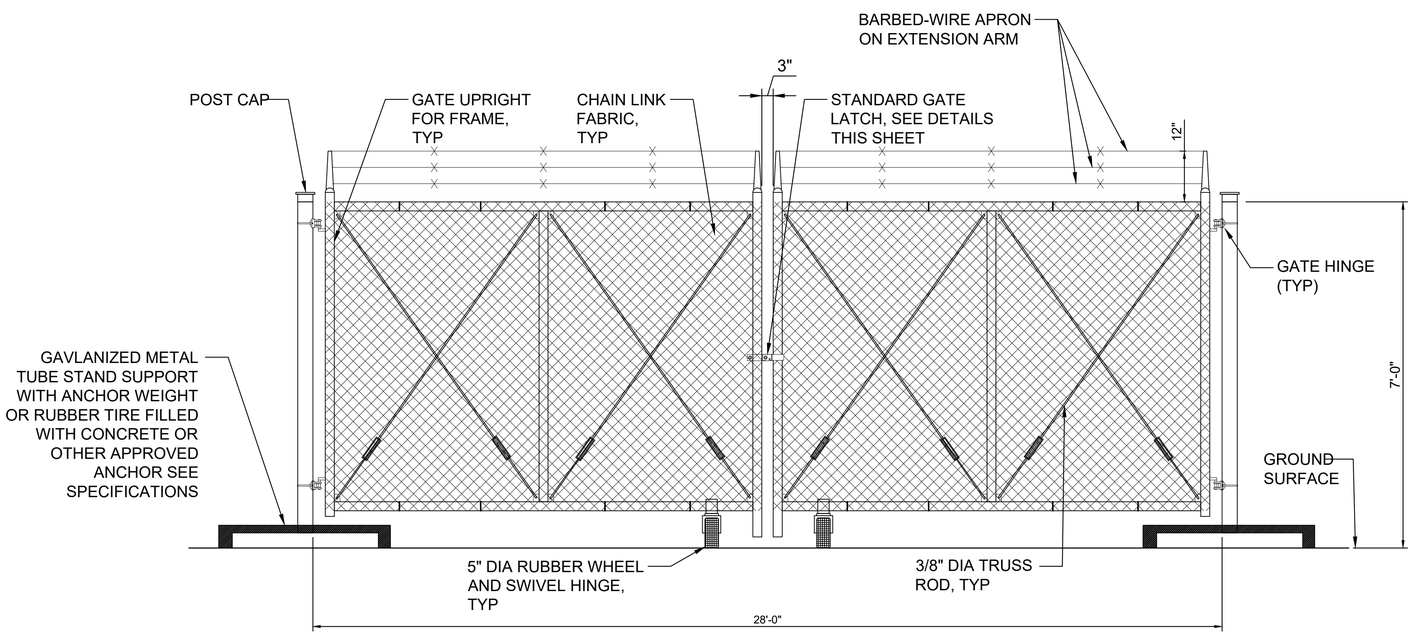

1. INSTALL GATE PRIOR TO BEGINNING DEMOLITION AT LOCATION APPROVED BY CONTRACTING OFFICER.
2. AFTER GATE IS REMOVED, REPAIR DAMAGE TO EXISTING GROUND SURFACE TO THE SATISFACTION OF THE CONTRACTING OFFICER.
3. GATE SHALL BE CAPABLE OF WITHSTANDING 201 KPH WIND/JET BLAST.

A1 TEMPORARY SWING GATE

NOT TO SCALE

US Army Corps of Engineers®

MARK	DESCRIPTION	DATE

ISSUE DATE: OCT 15, 2025
SOLICITATION NO.: W9128A22F0002
CONTRACT NO.: W9128A19D0012

DESIGNED BY: J. LOVE
DRAWN BY: T. CRIST
CHECKED BY: M. UNTEN
SUBMITTED BY:
SIZE: ANSI D

U.S. ARMY CORPS OF ENGINEERS
HONOLULU DISTRICT
FORT SHAFTER, HAWAII

COFFMAN ENGINEERS
745 FORT STREET, SUITE 400
HONOLULU, HAWAII 96813

JOINT BASE PEARL HARBOR-HICKAM, OAHU, HAWAII
FY22 HAWAII AIR NATIONAL GUARD (HIANG) F-22 PLUS UP
ADD MUNITIONS CUBE STORAGE FACILITY

PHASING DETAILS

SHEET ID

C-509

REVISED FINAL SUBMITTAL

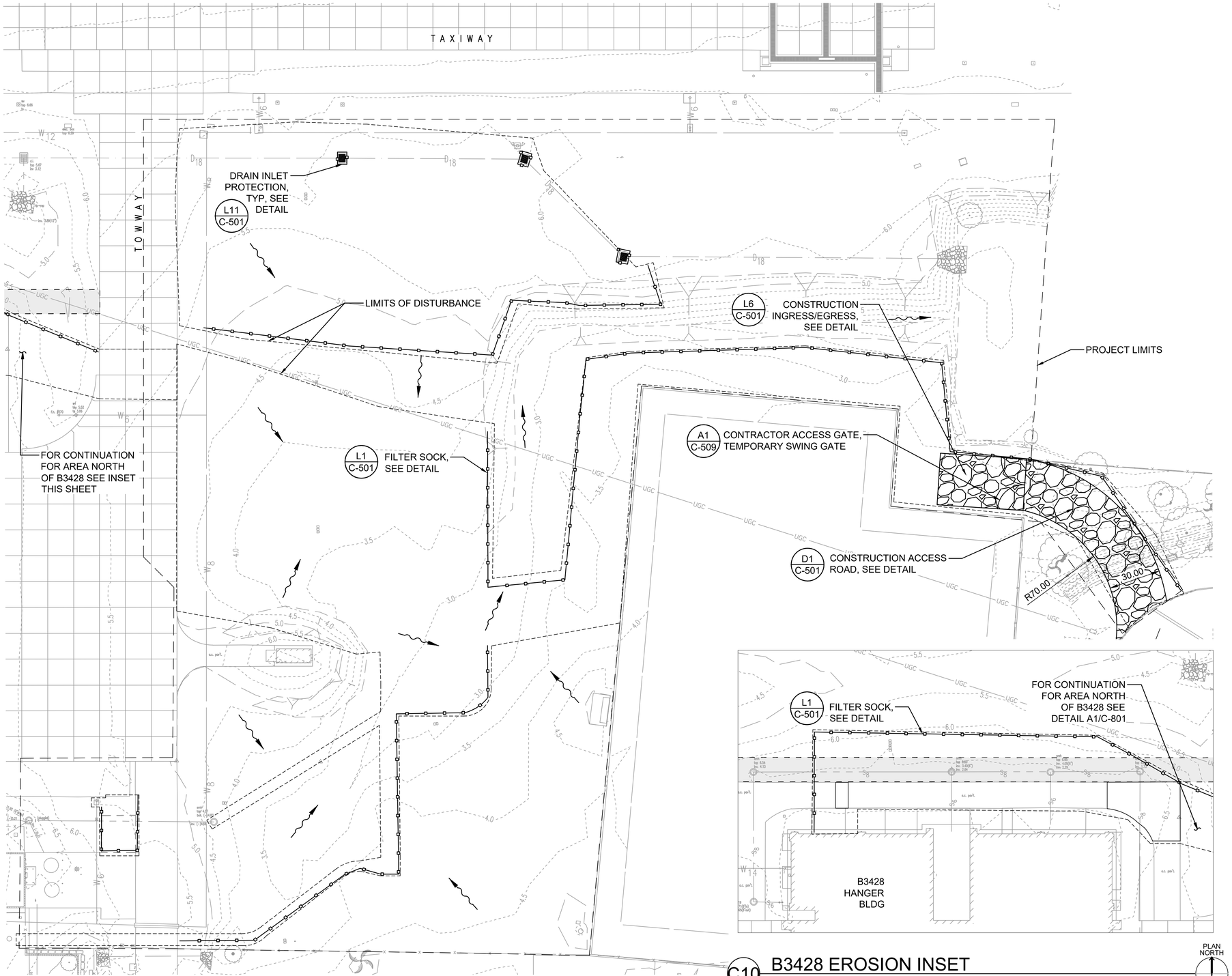

A1 EROSION AND SEDIMENT CONTROL INITIAL PLAN (BID OPTION)

SCALE 1" = 30'

C10 B3428 EROSION INSET

SCALE 1" = 30'

GENERAL SHEET NOTES:

1. FOR EROSION AND SEDIMENT CONTROL NOTES, SEE SHEET C-002.
2. FOR SECURITY FENCING AND PHASING, SEE SHEETS C-102 AND C-103.
3. SITE ACCESS AND LAYDOWN AREA TO BE COORDINATED WITH THE CONTRACTING OFFICER PRIOR TO THE START OF CONSTRUCTION.
3. THE PROJECT'S LIMITS OF DISTURBANCE IS 2.10-ACRES AS SHOWN WITHIN THE APPROXIMATE PROJECT LIMITS. INCLUDING COSA, THE TOTAL PROJECT LIMITS IS +/- 3.70-ACRES. AN NPDES PERMIT FOR STORMWATER DISCHARGES ASSOCIATED WITH CONSTRUCTION ACTIVITIES, PER HAR 11-55 APPENDIX C, SHALL BE OBTAINED FOR THIS PROJECT.
4. SITE ACCESS AND LAYDOWN AREA TO BE COORDINATED WITH THE CONTRACTING OFFICER PRIOR TO THE START OF CONSTRUCTION.
5. THE CONTRACTOR SHALL MANAGE ITS ACTIVITIES IN A MANNER THAT MINIMIZES THE POTENTIAL FOR WATER OR WIND EROSION OF SOIL.
6. EROSION CONTROL MEASURES WILL BE MAINTAINED AT ALL TIMES. IF FULL IMPLEMENTATION OF THE CONTRACT DOCUMENTS DOES NOT PROVIDE FOR EFFECTIVE EROSION CONTROL. ADDITIONAL EROSION AND SEDIMENT CONTROL MEASURES SHALL BE IMPLEMENTED TO CONTROL OR TREAT THE SEDIMENT SOURCE.
7. EROSION CONTROL DEVICES SHALL BE INSTALLED PRIOR TO LAND DISTURBANCE. THE LOCATION OF SOME EROSION CONTROL DEVICES MAY HAVE TO BE ALTERED FROM THAT SHOWN ON THE CONTRACT DRAWINGS. IF DRAINAGE PATTERNS DURING CONSTRUCTION ARE DIFFERENT FROM THE FINAL PROPOSED DRAINAGE PATTERNS. IT IS THE CONTRACTOR'S RESPONSIBILITY TO ACCOMPLISH EROSION CONTROL FOR ALL DRAINAGE PATTERNS CREATED AT VARIOUS STAGES DURING CONSTRUCTION. ANY DIFFICULTY IN CONTROLLING EROSION DURING ANY PHASE OF CONSTRUCTION SHALL BE REPORTED TO THE COR IMMEDIATELY.
8. THE CONTRACTOR SHALL SUBMIT A SWPPP FOR NPDES PERMIT AND RECEIVE APPROVAL OF BY THE AGENCY OR AGENCIES HAVING JURISDICTION.
9. THE CONTRACTOR SHALL PROPERLY CONSIDER WEATHER FORECASTS AND PREVAILING WEATHER CONDITIONS WHEN PLANNING ITS ACTIVITIES.
10. CONTRACTOR TO REFER TO PHASING NOTES/SHEETS FOR PROJECT SCOPE OF WORK DURING PHASE/STAGE ACTIVITIES.
11. LOCATE, FIND, AND AVOID ALL UNDERGROUND UTILITIES INCLUDING COMMUNICATION LINES PRIOR TO INSTALLING FENCING OR COMMENCING TRENCHING OR GRADING.

LEGEND:

- FLOW ARROW
- PROJECT LIMITS
- LIMITS OF DISTURBANCE
- 4.0 EXISTING CONTOUR
- FILTER SOCK
- DRAIN INLET PROTECTION, SEE DETAIL L11/C-501

US Army Corps of Engineers®

MARK	DESCRIPTION	DATE

DESIGNED BY: J. LOWE
DRAWN BY: T. CRIST
CHECKED BY: M. UNTEN
SUBMITTED BY:
SIZE: ANSI D
ISSUE DATE: OCT 15, 2025
SOLICITATION NO.: W9128A22F0002
CONTRACT NO.: W9128A19D0012

U.S. ARMY CORPS OF ENGINEERS
HONOLULU DISTRICT
FORT SHAFTER, HAWAII

COFFMAN ENGINEERS
745 FORT STREET, SUITE 400
HONOLULU, HAWAII 96813

JOINT BASE PEARL HARBOR-HICKAM, OAHU, HAWAII
FY22 HAWAII AIR NATIONAL GUARD (HIANG) F-22 PLUS UP
ADD EGRESS SHOP

EROSION AND SEDIMENT CONTROL INITIAL PLAN (BID OPTION)

SHEET ID
C-801

REVISED FINAL SUBMITTAL

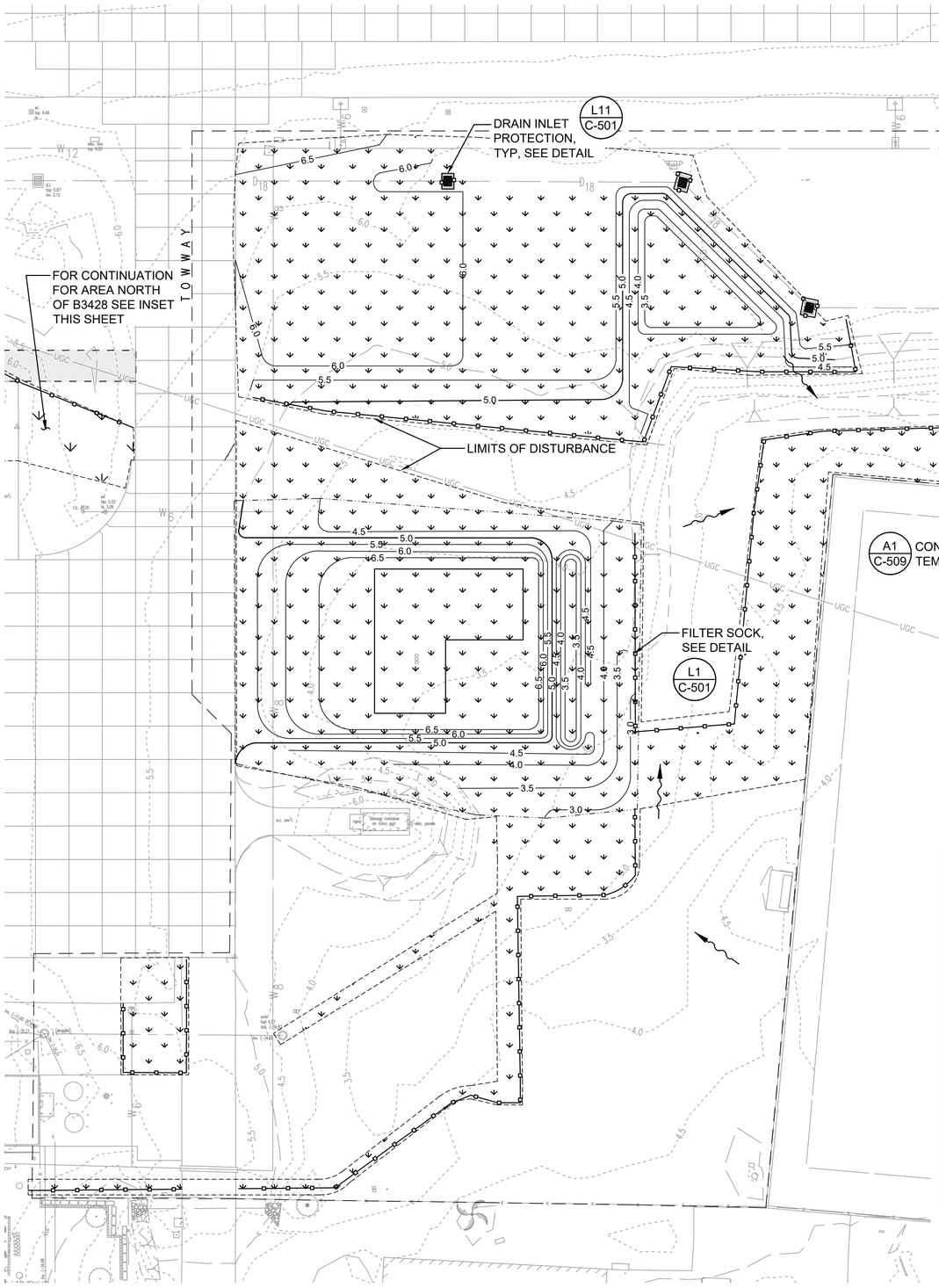

A1 EROSION AND SEDIMENT CONTROL INTERMEDIATE PLAN (BID OPTION)

SCALE 1" = 30'

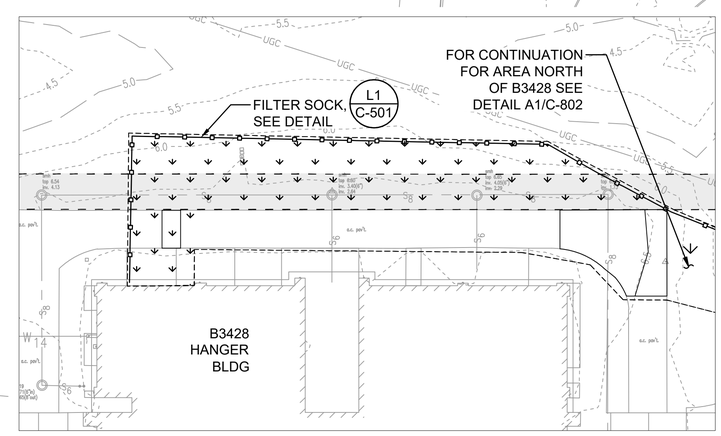

C10 B3428 EROSION INSET

SCALE 1" = 30'

PLAN NORTH

0 30' 60'

GENERAL SHEET NOTES:

1. FOR EROSION AND SEDIMENT CONTROL NOTES, SEE SHEET C-002.
2. FOR SECURITY FENCING AND PHASING, SEE SHEETS C-102 AND C-103.
3. SITE ACCESS AND LAYDOWN AREA TO BE COORDINATED WITH THE CONTRACTING OFFICER PRIOR TO THE START OF CONSTRUCTION.
3. THE PROJECT'S LIMITS OF DISTURBANCE IS 2.10-ACRES AS SHOWN WITHIN THE APPROXIMATE PROJECT LIMITS. INCLUDING COSA, THE TOTAL PROJECT LIMITS IS +/- 3.70-ACRES. AN NPDES PERMIT FOR STORMWATER DISCHARGES ASSOCIATED WITH CONSTRUCTION ACTIVITIES, PER HAR 11-55 APPENDIX C, SHALL BE OBTAINED FOR THIS PROJECT.
4. THE CONTRACTOR SHALL MANAGE ITS ACTIVITIES IN A MANNER THAT MINIMIZES THE POTENTIAL FOR WATER OR WIND EROSION OF SOIL.
5. EROSION CONTROL MEASURES WILL BE MAINTAINED AT ALL TIMES. IF FULL IMPLEMENTATION OF THE CONTRACT DOCUMENTS DOES NOT PROVIDE FOR EFFECTIVE EROSION CONTROL. ADDITIONAL EROSION AND SEDIMENT CONTROL MEASURES SHALL BE IMPLEMENTED TO CONTROL OR TREAT THE SEDIMENT SOURCE.
6. EROSION CONTROL DEVICES SHALL BE INSTALLED PRIOR TO LAND DISTURBANCE. THE LOCATION OF SOME EROSION CONTROL DEVICES MAY HAVE TO BE ALTERED FROM THAT SHOWN ON THE CONTRACT DRAWINGS. IF DRAINAGE PATTERNS DURING CONSTRUCTION ARE DIFFERENT FROM THE FINAL PROPOSED DRAINAGE PATTERNS. IT IS THE CONTRACTOR'S RESPONSIBILITY TO ACCOMPLISH EROSION CONTROL FOR ALL DRAINAGE PATTERNS CREATED AT VARIOUS STAGES DURING CONSTRUCTION. ANY DIFFICULTY IN CONTROLLING EROSION DURING ANY PHASE OF CONSTRUCTION SHALL BE REPORTED TO THE COR IMMEDIATELY.
7. THE CONTRACTOR SHALL SUBMIT A SWPPP FOR NPDES PERMIT AND RECEIVE APPROVAL OF BY THE AGENCY OR AGENCIES HAVING JURISDICTION.
8. THE CONTRACTOR SHALL PROPERLY CONSIDER WEATHER FORECASTS AND PREVAILING WEATHER CONDITIONS WHEN PLANNING ITS ACTIVITIES.
9. CONTRACTOR TO REFER TO PHASING NOTES/SHEETS FOR PROJECT SCOPE OF WORK DURING PHASE/STAGE ACTIVITIES.
10. LOCATE, FIND, AND AVOID ALL UNDERGROUND UTILITIES INCLUDING COMMUNICATION LINES PRIOR TO INSTALLING FENCING OR COMMENCING TRENCHING OR GRADING.

LEGEND:

- FLOW ARROW
- PROJECT LIMITS
- LIMITS OF DISTURBANCE
- 4.0 EXISTING CONTOUR
- FILTER SOCK
- TEMPORARY COVER/STABILIZATION
- DRAIN INLET PROTECTION, SEE DETAIL L11/C-501

US Army Corps of Engineers®

MARK	DESCRIPTION	DATE

DESIGNED BY: J. LOWE
DRAWN BY: T. CRIST
CHECKED BY: M. UNTEN
SUBMITTED BY:
SIZE: ANSI D
ISSUE DATE: OCT 15, 2025
SOLICITATION NO.: W9128A22F0002
CONTRACT NO.: W9128A19D0012

U.S. ARMY CORPS OF ENGINEERS
HONOLULU DISTRICT
FORT SHAFTER, HAWAII

COFFMAN ENGINEERS
745 FORT STREET, SUITE 400
HONOLULU, HAWAII 96813

JOINT BASE PEARL HARBOR-HICKAM, OAHU, HAWAII
FY22 HAWAII AIR NATIONAL GUARD (HANG) F-22 PLUS UP
ADD EGRESS SHOP

EROSION AND SEDIMENT CONTROL INTERMEDIATE PLAN (BID OPTION)

SHEET ID

C-802

REVISED FINAL SUBMITTAL

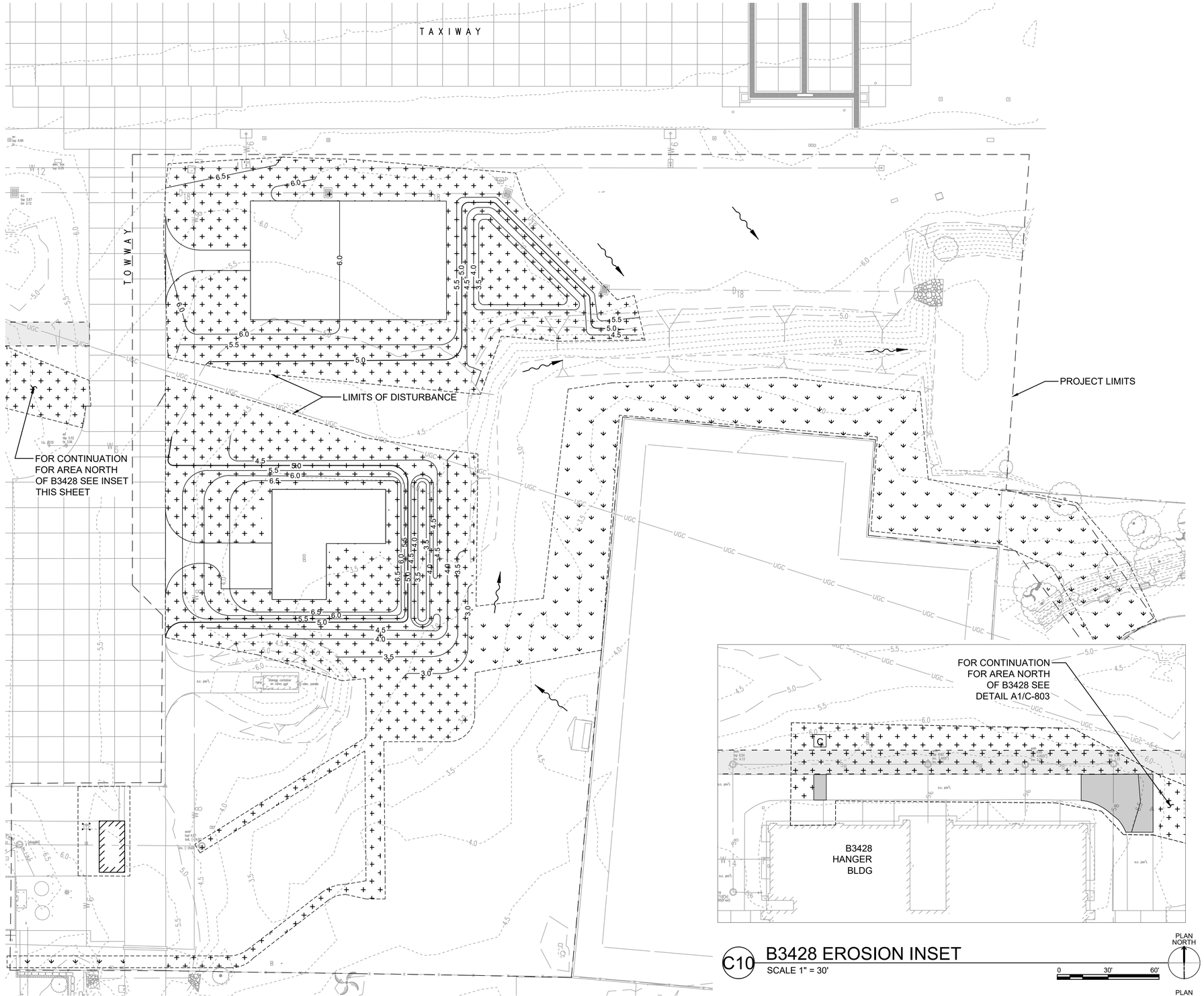

A1 EROSION AND SEDIMENT CONTROL FINAL PLAN (BID OPTION)

SCALE 1" = 30'

C10 B3428 EROSION INSET

SCALE 1" = 30'

PLAN NORTH

0 30' 60'

GENERAL SHEET NOTES:

1. FOR EROSION AND SEDIMENT CONTROL NOTES, SEE SHEET C-002.
2. FOR SECURITY FENCING AND PHASING, SEE SHEETS C-102 AND C-103.
3. SITE ACCESS AND LAYDOWN AREA TO BE COORDINATED WITH THE CONTRACTING OFFICER PRIOR TO THE START OF CONSTRUCTION.
3. THE PROJECT'S LIMITS OF DISTURBANCE IS 1.88-ACRES AS SHOWN WITHIN THE APPROXIMATE PROJECT LIMITS. INCLUDING COSA, THE TOTAL PROJECT LIMITS IS +/- 3.47-ACRES. AN NPDES PERMIT FOR STORMWATER DISCHARGES ASSOCIATED WITH CONSTRUCTION ACTIVITIES, PER HAR 11-55 APPENDIX C, SHALL BE OBTAINED FOR THIS PROJECT.
4. THE CONTRACTOR SHALL MANAGE ITS ACTIVITIES IN A MANNER THAT MINIMIZES THE POTENTIAL FOR WATER OR WIND EROSION OF SOIL.
5. EROSION CONTROL MEASURES WILL BE MAINTAINED AT ALL TIMES. IF FULL IMPLEMENTATION OF THE CONTRACT DOCUMENTS DOES NOT PROVIDE FOR EFFECTIVE EROSION CONTROL. ADDITIONAL EROSION AND SEDIMENT CONTROL MEASURES SHALL BE IMPLEMENTED TO CONTROL OR TREAT THE SEDIMENT SOURCE.
6. EROSION CONTROL DEVICES SHALL BE INSTALLED PRIOR TO LAND DISTURBANCE. THE LOCATION OF SOME EROSION CONTROL DEVICES MAY HAVE TO BE ALTERED FROM THAT SHOWN ON THE CONTRACT DRAWINGS. IF DRAINAGE PATTERNS DURING CONSTRUCTION ARE DIFFERENT FROM THE FINAL PROPOSED DRAINAGE PATTERNS. IT IS THE CONTRACTOR'S RESPONSIBILITY TO ACCOMPLISH EROSION CONTROL FOR ALL DRAINAGE PATTERNS CREATED AT VARIOUS STAGES DURING CONSTRUCTION. ANY DIFFICULTY IN CONTROLLING EROSION DURING ANY PHASE OF CONSTRUCTION SHALL BE REPORTED TO THE COR IMMEDIATELY.
7. THE CONTRACTOR SHALL SUBMIT A SWPPP FOR NPDES PERMIT AND RECEIVE APPROVAL OF BY THE AGENCY OR AGENCIES HAVING JURISDICTION.
8. THE CONTRACTOR SHALL PROPERLY CONSIDER WEATHER FORECASTS AND PREVAILING WEATHER CONDITIONS WHEN PLANNING ITS ACTIVITIES.
9. CONTRACTOR TO REFER TO PHASING NOTES/SHEETS FOR PROJECT SCOPE OF WORK DURING PHASE/STAGE ACTIVITIES.
10. LOCATE, FIND, AND AVOID ALL UNDERGROUND UTILITIES INCLUDING COMMUNICATION LINES PRIOR TO INSTALLING FENCING OR COMMENCING TRENCHING OR GRADING.

LEGEND:

- FLOW ARROW
- PROJECT LIMITS
- LIMITS OF DISTURBANCE
- GRADING LIMITS
- 4.0 EXISTING CONTOUR
- PERMANENT COVER/STABILIZATION

US Army Corps of Engineers®

MARK	DESCRIPTION	DATE

ISSUE DATE: OCT 15, 2025
SOLICITATION NO.: W9128A22F0002
CONTRACT NO.: W9128A19D0012

DESIGNED BY: J. LOVE
DRAWN BY: T. CRIST
CHECKED BY: M. UNTEN
SUBMITTED BY:
SIZE: ANSI D

U.S. ARMY CORPS OF ENGINEERS
HONOLULU DISTRICT
FORT SHAFTER, HAWAII

COFFMAN ENGINEERS
745 FORT STREET, SUITE 400
HONOLULU, HAWAII 96813

JOINT BASE PEARL HARBOR-HICKAM, OAHU, HAWAII
FY22 HAWAII AIR NATIONAL GUARD (HIANG) F-22 PLUS UP
ADD EGRESS SHOP

EROSION AND SEDIMENT CONTROL FINAL PLAN
(BID OPTION)

SHEET ID
C-803

REVISED FINAL SUBMITTAL

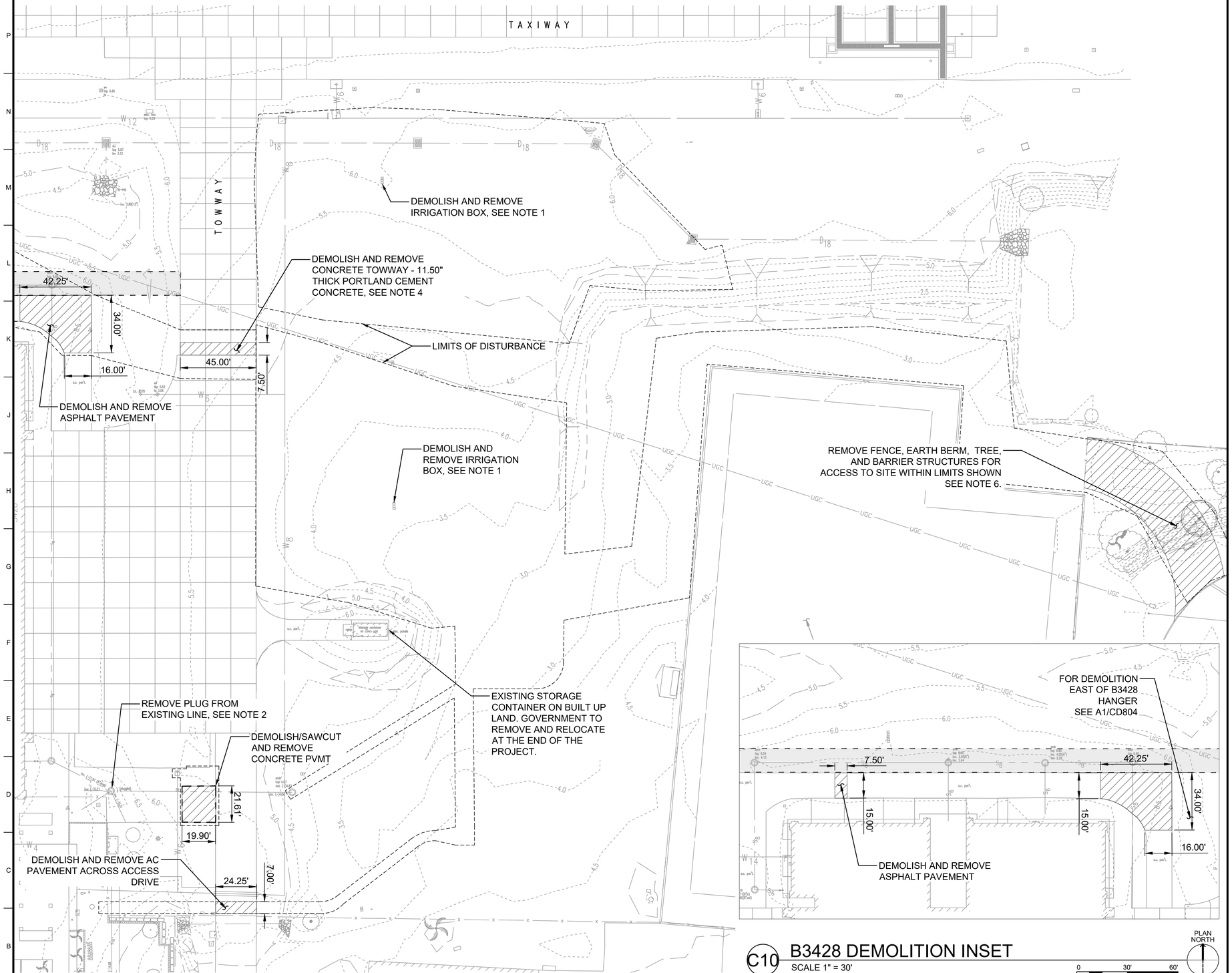

A1 DEMOLITION PLAN (BID OPTION)

SCALE 1" = 30'

C10 B3428 DEMOLITION INSET

SCALE 1" = 30'

PLAN NORTH

0 30' 60'

PLAN NORTH

0 30' 60'

GENERAL SHEET NOTES:

1. DEMOLISH AND REMOVE EXISTING IRRIGATION BOXES, VALVES, AND LINES. CUT AND PLUG CONNECTION TO WATER MAIN.
2. AFTER REMOVAL OF PLUG CONTRACTOR SHALL CCTV EXISTING SEWER LINE TO ENSURE NO DEFORMATIONS OCCUR IN THE LINE BEFORE CONNECTION TO NEW SEWER LINE.
3. CONTRACTOR TO SAWCUT CONCRETE APRON AT EXISTING JOINT LINES FOR DEMOLITION AND REMOVAL OF CONCRETE.
4. EXISTING CONCRETE PAVEMENT THICKNESS OBTAINED FROM THE 'AIRFIELD PAVEMENT EVALUATION, HAWAII ANG (JBPHH), HAWAII; ICAO:PHNL, AIR FORCE CIVIL ENGINEER CENTER' (JUNE 2019)
5. CONTRACTOR SHALL REMOVE EXISTING TOWWAY CONCRETE ALONG JOINTS AS SHOWN ON PLANS.
6. CONTRACTOR SHALL REMOVE EXISTING BARRIER STRUCTURES AND EARTHEN BERM TO CREATE CONSTRUCTION ACCESS TO SITE. UPON COMPLETION OF THE PROJECT, THIS AREA WILL BE RESTORED TO INCLUDE FENCE, EARTHEN BERM AND BARRIER STRUCTURE TO MATCH THE PRE-CONSTRUCTION CONDITION. TREE REMOVED WILL NOT BE REPLACED. AREA TO BE GRASSED TO MATCH PRE-CONSTRUCTION CONDITION.

LEGEND:

- DEMOLISH AND REMOVE
- DEMOLISH TREE
- 4.0 EXISTING CONTOUR

US Army Corps of Engineers®

MARK	DESCRIPTION	DATE

DESIGNED BY: J. LOWE
DRAWN BY: T. CRIST
CHECKED BY: M. UNTEN
SUBMITTED BY:
SIZE: ANSI D
ISSUE DATE: OCT 15, 2025
SOLICITATION NO.: W9128A22F0002
CONTRACT NO.: W9128A19D0012

U.S. ARMY CORPS OF ENGINEERS
HONOLULU DISTRICT
FORT SHAFTER, HAWAII

COFFMAN ENGINEERS
745 FORT STREET, SUITE 400
HONOLULU, HAWAII 96813

JOINT BASE PEARL HARBOR-HICKAM, OAHU, HAWAII
FY22 HAWAII AIR NATIONAL GUARD (HIANG) F-22 PLUS UP
ADD EGRESS SHOP

DEMOLITION PLAN (BID OPTION)

SHEET ID

C-804

REVISED FINAL SUBMITTAL

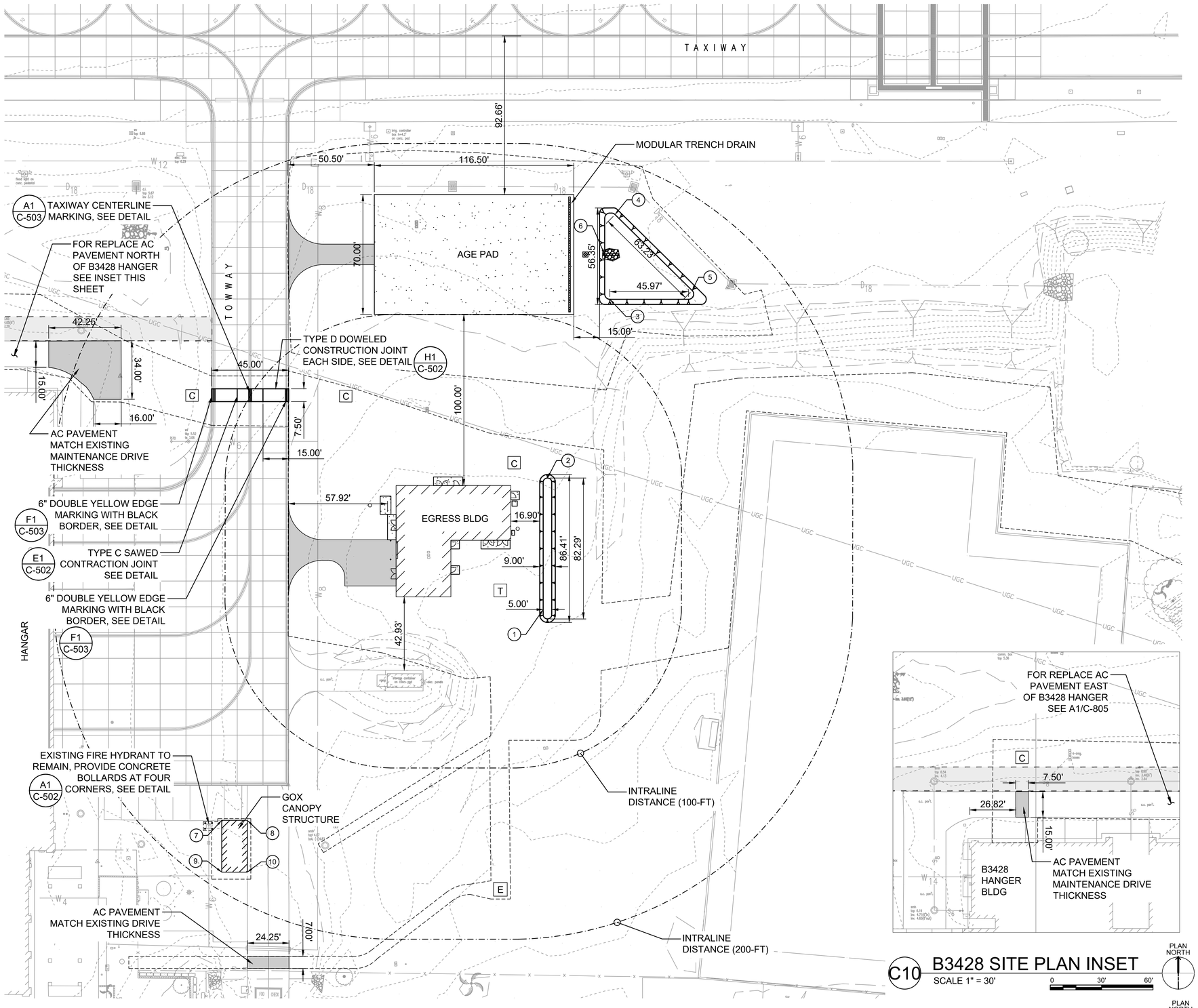

A1 SITE PLAN (BID OPTION)

SCALE 1" = 30'

C10 B3428 SITE PLAN INSET

SCALE 1" = 30'

PLAN NORTH

0 30' 60'

GENERAL SHEET NOTES:

1. FOR ENLARGED SITE PLAN SEE SHEET C-806.

LEGEND:

- AC PAVEMENT
- CONCRETE
- LIMITS OF DISTURBANCE
- INTRALINE DISTANCE
- INHABITED BUILDING DISTANCE
- T — TRANSFORMER, SEE ES101
- E — ELECTRICAL MANHOLE, SEE ES101
- C — TELECOM MAINTENACE HOLE, SEE TELECOM PLANS

POINT TABLE

POINT #	NORTHING	EASTING	DESCRIPTION
1	55608.63	1656988.33	WQV BASIN
2	55685.43	1656990.83	WQV BASIN
3	55789.82	1657027.25	WQV BASIN
4	55839.32	1657030.28	WQV BASIN
5	55794.95	1657075.33	WQV BASIN
6	55816.01	1657024.25	SD OUTFALL
7	55485.51	1656800.57	GOX SHELTER
8	55485.51	1656815.57	GOX SHELTER
9	55455.26	1656800.57	GOX SHELTER
10	55455.26	1656815.57	GOX SHELTER

US Army Corps of Engineers®

MARK	DESCRIPTION	DATE

DESIGNED BY: J. LOWE
DRAWN BY: T. CRIST
CHECKED BY: M. UNTEN
SUBMITTED BY:
SIZE: ANSI D
ISSUE DATE: OCT 15, 2025
SOLICITATION NO.: W9128A22F0002
CONTRACT NO.: W9128A19D0012

U.S. ARMY CORPS OF ENGINEERS
HONOLULU DISTRICT
FORT SHAFTER, HAWAII

COFFMAN ENGINEERS
745 FORT STREET, SUITE 400
HONOLULU, HAWAII 96813

JOINT BASE PEARL HARBOR-HICKAM, OAHU, HAWAII
FY22 HAWAII AIR NATIONAL GUARD (HIANG) F-22 PLUS UP
ADD EGRESS SHOP

SITE PLAN (BID OPTION)

SHEET ID
C-805

REVISED FINAL SUBMITTAL

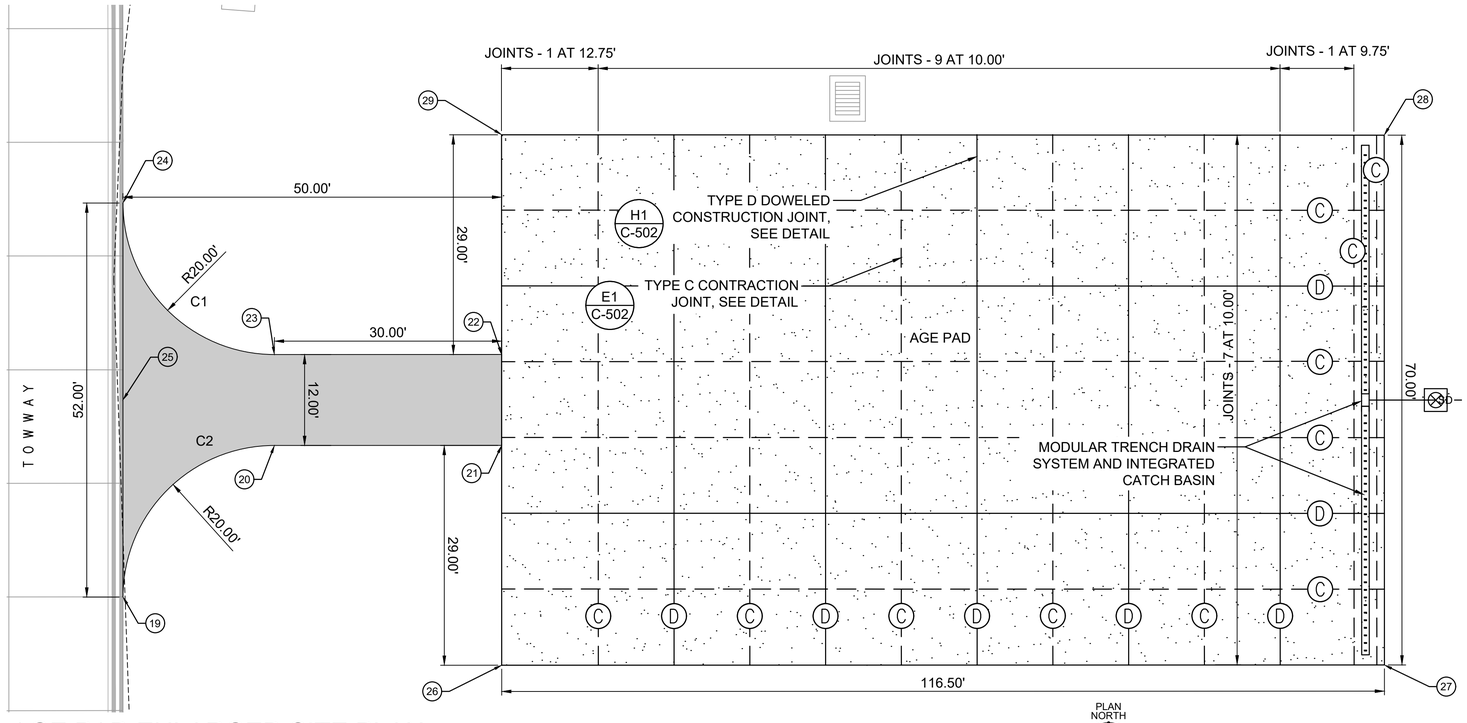

H1 AGE PAD ENLARGED SITE PLAN

SCALE 1" = 10'

PLAN NORTH

0 10' 20'

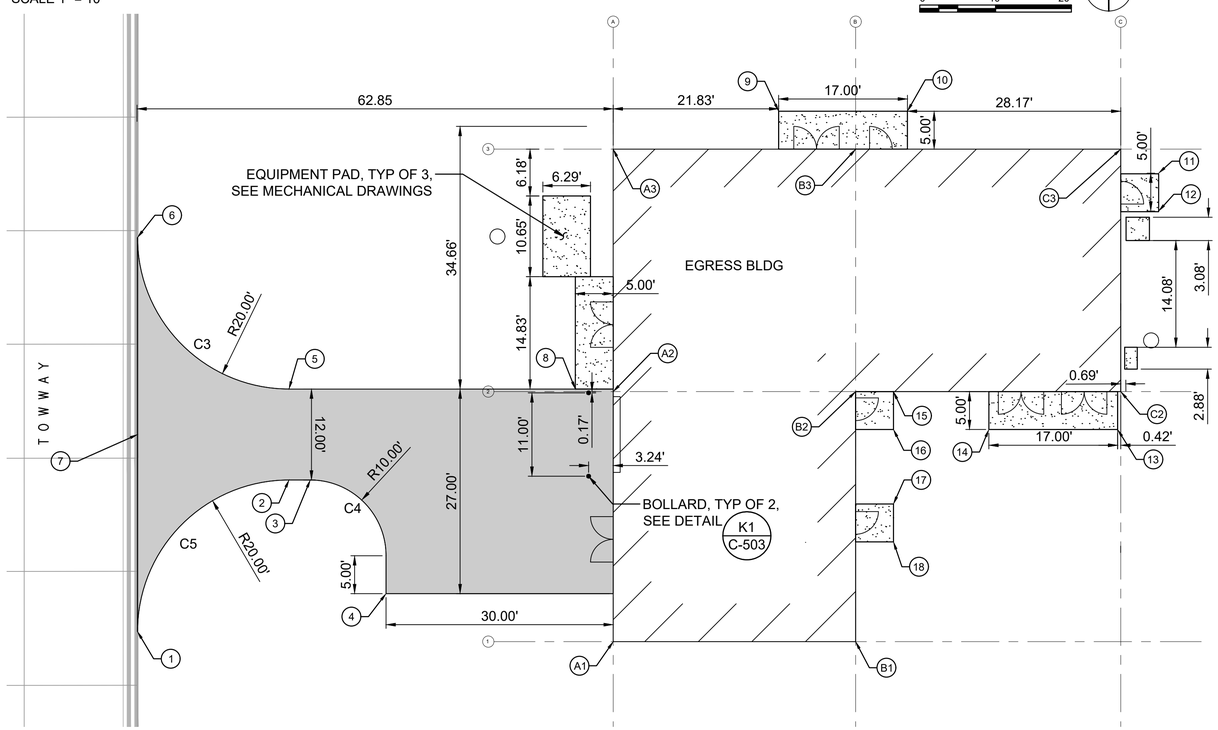

A1 EGRESS BLDG ENLARGED SITE PLAN

SCALE 1" = 10'

PLAN NORTH

0 10' 20'

LEGEND:

- AC PAVEMENT
- CONCRETE
- (C) SAWED CONTRACTION JOINT
- (D) DOWELED CONSTRUCTION JOINT

CURVE TABLE

CURVE #	LENGTH	RADIUS	DELTA	CH LENGTH
C1	31.42'	20.00'	090°00'00"	28.28'
C2	31.42'	20.00'	090°00'00"	28.28'
C3	31.42'	20.00'	090°00'00"	28.28'
C4	15.71'	10.00'	089°59'38"	14.14'
C5	31.42'	20.00'	090°00'00"	28.28'

POINT TABLE

POINT #	NORTHING	EASTING	DESCRIPTION
1	55617.38	1656839.63	PAVEMENT EDGE
2	55637.38	1656859.63	PAVEMENT EDGE
3	55637.38	1656862.44	PAVEMENT EDGE
4	55622.38	1656872.45	PAVEMENT EDGE
5	55649.38	1656859.63	PAVEMENT EDGE
6	55669.38	1656839.63	PAVEMENT EDGE
7	55643.38	1656839.64	PAVEMENT EDGE
8	55649.38	1656897.43	CONC SIDEWALK
9	55686.04	1656924.26	CONC SIDEWALK
10	55686.04	1656941.26	CONC SIDEWALK
11	55677.87	1656974.43	CONC STOOP
12	55672.87	1656974.43	CONC STOOP
13	55644.04	1656969.01	CONC STOOP
14	55644.04	1656952.01	CONC STOOP
15	55649.04	1656939.42	CONC STOOP
16	55644.04	1656939.42	CONC STOOP
17	55634.21	1656939.42	CONC STOOP
18	55629.21	1656939.42	CONC STOOP
19	55790.03	1656839.73	PAVEMENT EDGE
20	55810.02	1656859.72	PAVEMENT EDGE
21	55810.02	1656889.71	PAVEMENT EDGE
22	55821.99	1656889.72	PAVEMENT EDGE
23	55822.02	1656859.72	PAVEMENT EDGE
24	55842.02	1656839.72	PAVEMENT EDGE
25	55816.02	1656839.72	PAVEMENT EDGE
26	55781.03	1656889.73	AGE PAD
27	55781.05	1657006.23	AGE PAD
28	55850.96	1657006.20	AGE PAD
29	55851.03	1656889.72	AGE PAD

GRID LINE POINT TABLE

POINT #	NORTHING	EASTING
A1	55616.04	1656902.43
A2	55649.04	1656902.43
A3	55681.04	1656902.43
B1	55616.04	1656934.43
B2	55649.04	1656934.43
B3	55681.03	1656934.44
C2	55649.04	1656969.43
C3	55681.04	1656969.43

US Army Corps of Engineers®

MARK	DESCRIPTION	DATE

DESIGNED BY: J. LOWE
DRAWN BY: T. CRIST
CHECKED BY: M. UNTEN
SUBMITTED BY:
SIZE: ANSI D
ISSUE DATE: OCT 15, 2025
SOLICITATION NO.: W9128A22F0002
CONTRACT NO.: W9128A19D0012

U.S. ARMY CORPS OF ENGINEERS
HONOLULU DISTRICT
FORT SHAFTER, HAWAII

COFFMAN ENGINEERS
745 FORT STREET, SUITE 400
HONOLULU, HAWAII 96813

JOINT BASE PEARL HARBOR-HICKAM, OAHU, HAWAII
FY22 HAWAII AIR NATIONAL GUARD (HIANG) F-22 PLUS UP
ADD EGRESS SHOP

ENLARGED SITE PLAN (BID OPTION)

SHEET ID
C-806

REVISED FINAL SUBMITTAL

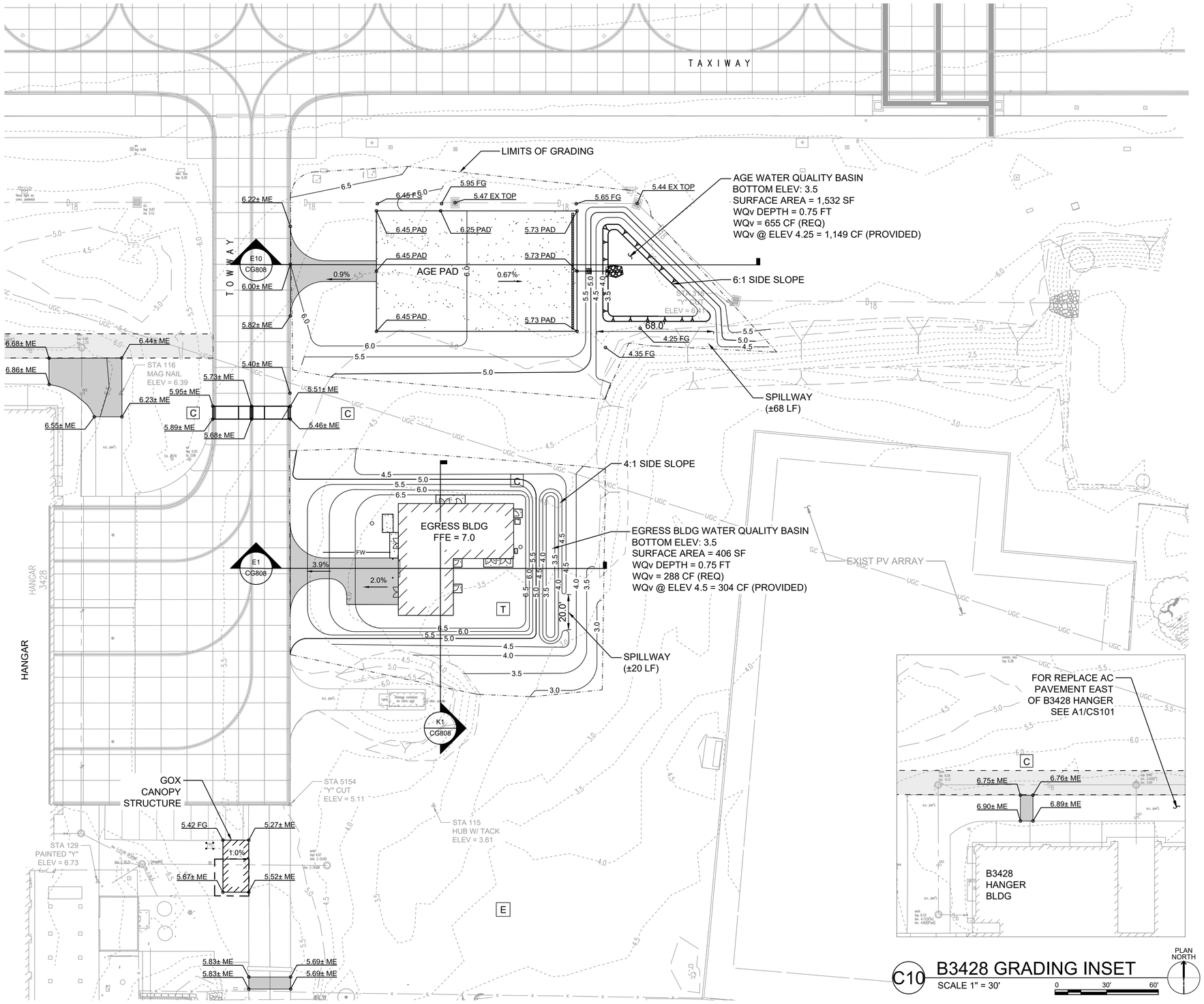

A1 GRADING PLAN (BID OPTION)

SCALE 1" = 30'

C10 B3428 GRADING INSET

SCALE 1" = 30'

GENERAL SHEET NOTES:

1. FOR ENLARGED GRADING PLAN SEE SHEET C-809.

LEGEND:

- FLOW ARROW
- LIMITS OF GRADING
- 4.0 FINISHED CONTOUR
- 4.0 EXISTING CONTOUR
- 5.40 FG FINISHED GRADE ELEVATION
- 5.40 ME MATCH EXISTING ELEVATION
- 5.40 EP EDGE OF PAVEMENT ELEVATION
- AC PAVEMENT
- CONCRETE
- LIMITS OF DISTURBANCE
- T TRANSFORMER, SEE ELECTRICAL PLANS
- E ELECTRICAL MANHOLE, SEE ELECTRICAL PLANS
- C TELECOM MAINTENACE HOLE, SEE TELECOM PLANS

US Army Corps of Engineers®

MARK	DESCRIPTION	DATE

ISSUE DATE: OCT 15, 2025
SOLICITATION NO.: W9128A22F0002
CONTRACT NO.: W9128A19D0012
DESIGNED BY: J. LOWE
DRAWN BY: T. CRIST
CHECKED BY: M. UNTEN
SUBMITTED BY:
SIZE: ANSI D

U.S. ARMY CORPS OF ENGINEERS
HONOLULU DISTRICT
FORT SHAFTER, HAWAII

COFFMAN ENGINEERS
745 FORT STREET, SUITE 400
HONOLULU, HAWAII 96813

JOINT BASE PEARL HARBOR-HICKAM, OAHU, HAWAII
FY22 HAWAII AIR NATIONAL GUARD (HIANG) F-22 PLUS UP
ADD EGRESS SHOP

GRADING PLAN (BID OPTION)

SHEET ID
C-807

REVISED FINAL SUBMITTAL

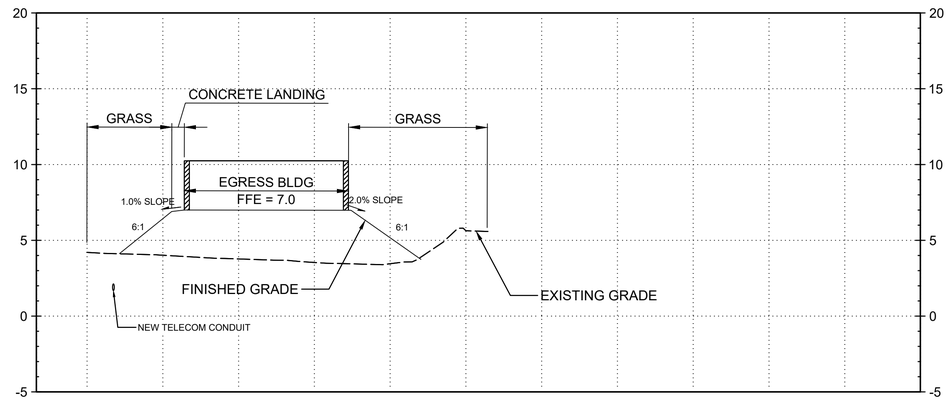

K1 EGRESS BUILDING SECTION

SCALE 1" = 30' H, 1"=5' V

0 30' 60'

0 5' 10'

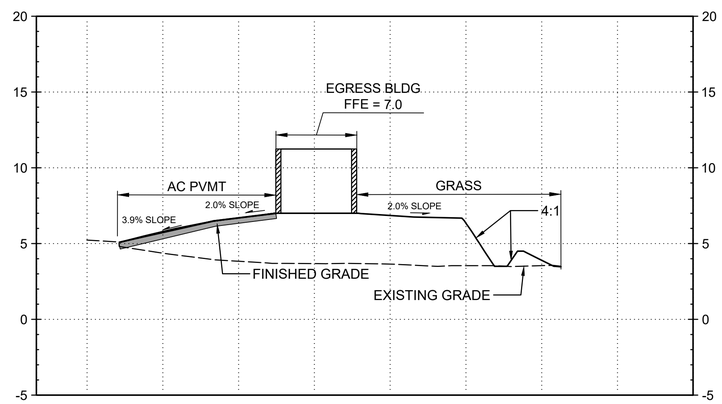

E1 EGRESS BUILDING SECTION

SCALE 1" = 30' H, 1"=5' V

0 30' 60'

0 5' 10'

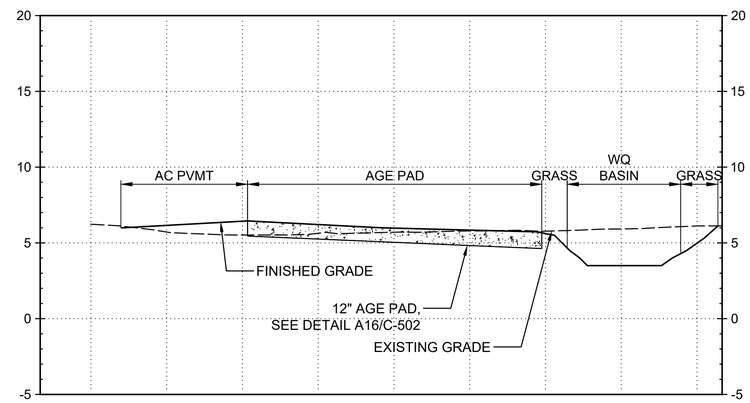

E10 AGE PAD SECTION

SCALE 1" = 30' H, 1"=5' V

0 30' 60'

0 5' 10'

US Army Corps of Engineers®

MARK	DESCRIPTION	DATE

ISSUE DATE: OCT 15, 2025
SOLICITATION NO.: W9128A22F0002
CONTRACT NO.: W9128A19D0012

DESIGNED BY: J. LOWIE
DRAWN BY: T. CRIST
CHECKED BY: M. UNTEN
SUBMITTED BY:
SIZE: ANSI D

U.S. ARMY CORPS OF ENGINEERS
HONOLULU DISTRICT
FORT SHAFTER, HAWAII

COFFMAN ENGINEERS
745 FORT STREET, SUITE 400
HONOLULU, HAWAII 96813

JOINT BASE PEARL HARBOR-HICKAM, OAHU, HAWAII
FY22 HAWAII AIR NATIONAL GUARD (HIANG) F-22 PLUS UP
ADD EGRESS SHOP

SITE SECTIONS (BID OPTION)

SHEET ID

C-808

REVISED FINAL SUBMITTAL

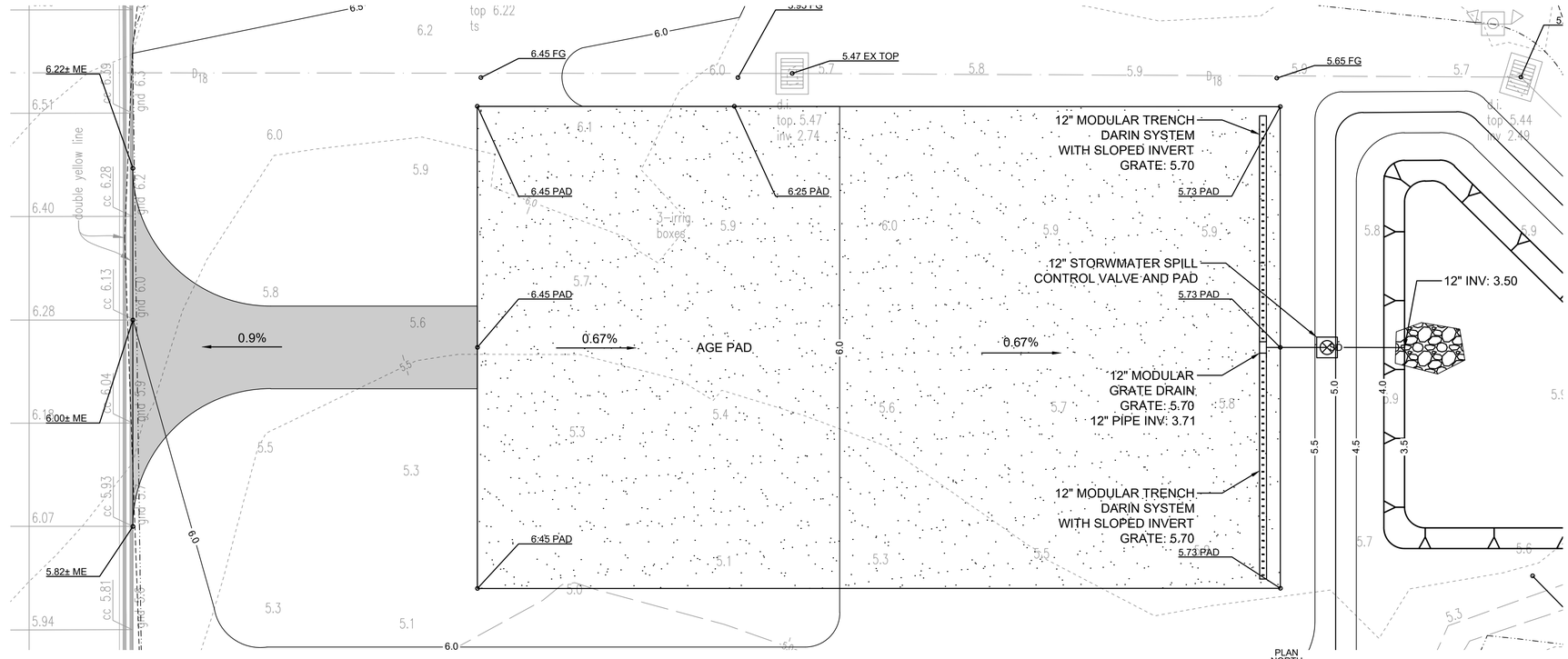

A1 ENLARGED GRADING PLAN (BID OPTION) - AGE PAD

SCALE 1" = 30'

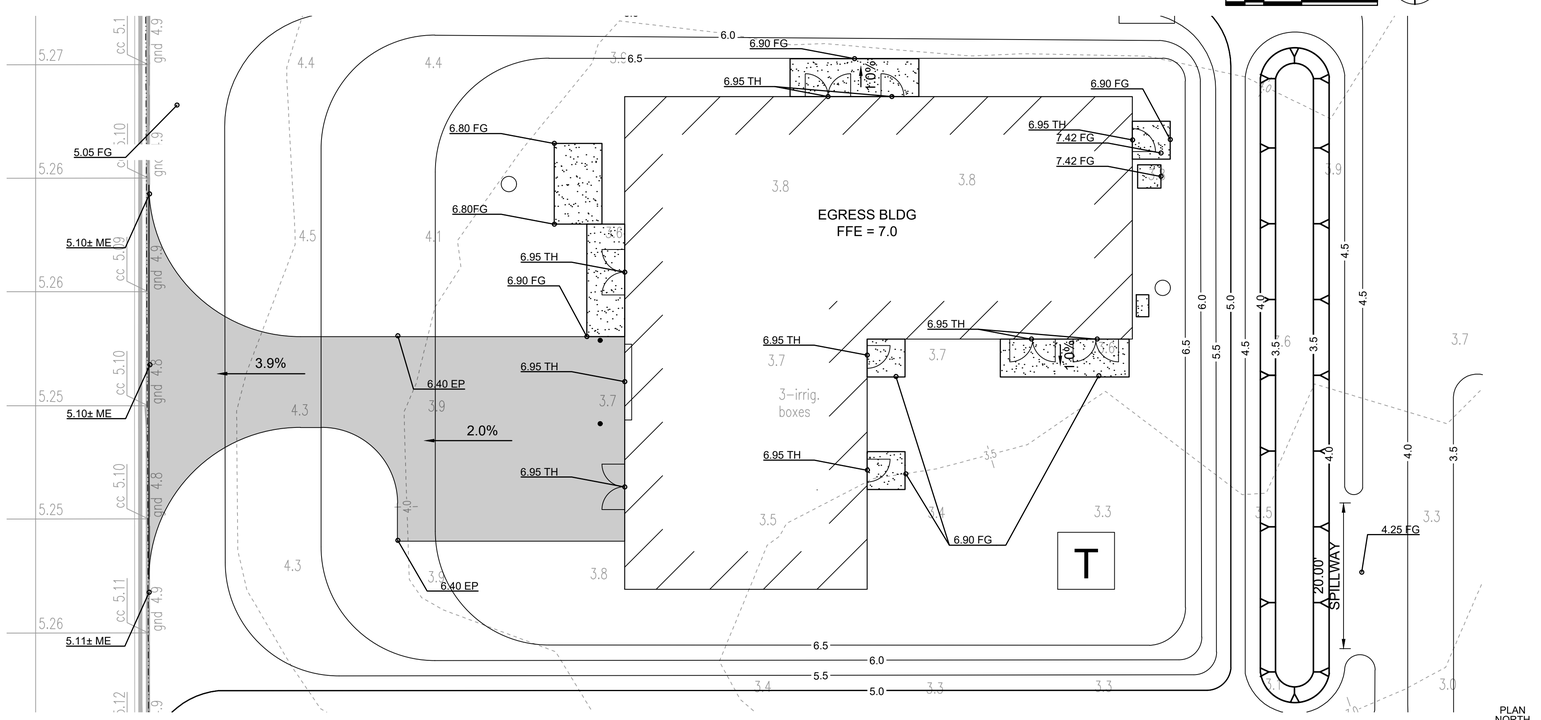

A1 ENLARGED GRADING PLAN (BID OPTION) - EGRESS BUILDING

SCALE 1" = 30'

LEGEND:

- LIMITS OF GRADING
- 4.0 FINISHED CONTOUR
- 4.0 EXISTING CONTOUR
- 5.40 FG FINISHED GRADE ELEVATION
- 5.40 ME MATCH EXISTING ELEVATION
- 5.40 EP EDGE OF PAVEMENT ELEVATION

US Army Corps of Engineers®

MARK	DESCRIPTION	DATE

ISSUE DATE: OCT 15, 2025
SOLICITATION NO.: W9128A22F0002
CONTRACT NO.: W9128A19D0012

DESIGNED BY: J. LOWE
DRAWN BY: T. GRIST
CHECKED BY: M. UNTEN
SUBMITTED BY:
SIZE: ANSI D

U.S. ARMY CORPS OF ENGINEERS
HONOLULU DISTRICT
FORT SHAFTER, HAWAII

COFFMAN ENGINEERS
745 FORT STREET, SUITE 400
HONOLULU, HAWAII 96813

JOINT BASE PEARL HARBOR-HICKAM, OAHU, HAWAII
FY22 HAWAII AIR NATIONAL GUARD (HIANG) F-22 PLUS UP
ADD EGRESS SHOP

ENLARGED GRADING PLAN (BID OPTION)

SHEET ID
C-809

REVISED FINAL SUBMITTAL

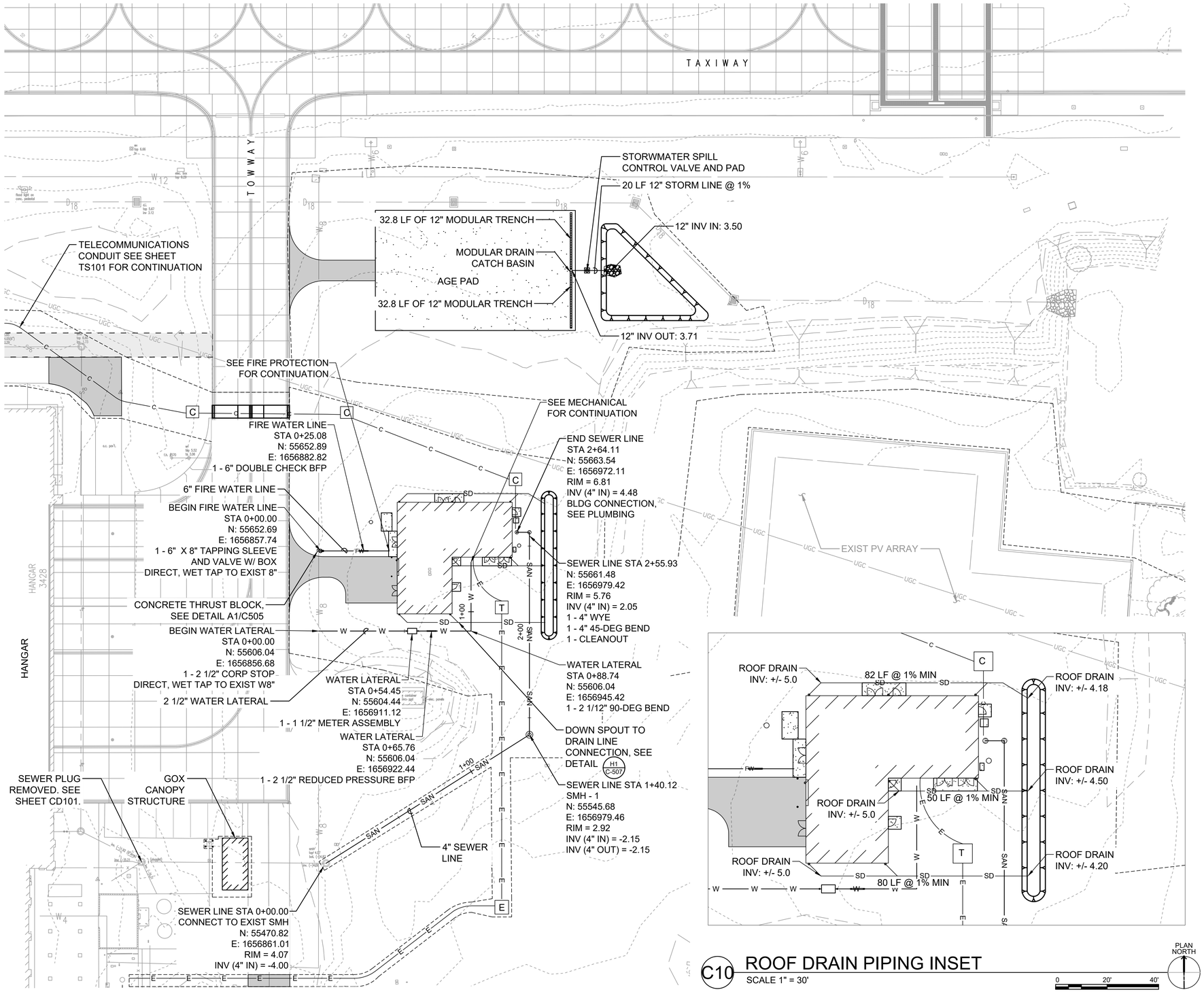

A1 UTILITY PLAN (BID OPTION)

SCALE 1" = 30'

C10 ROOF DRAIN PIPING INSET

SCALE 1" = 30'

GENERAL SHEET NOTES:

1. CONNECTIONS TO THE BUILDING ARE FIVE (5) FEET FROM THE BUILDING. FOR UTILITY CONTINUATION AT THE BUILDING CONNECTIONS, SEE PLUMBING AND FIRE PROTECTION DRAWINGS.
2. PROVIDE RISER CLEANOUT ON BUILDING SEWER LATERAL CONNECTION FIVE (5) FEET FROM THE BUILDING.
3. FOR SEWER CLEANOUT, SEE DETAIL H12/C-507.
4. FOR SEWER MANHOLE AND COVER, SEE DETAILS A1/C-504 AND M10/C-504.
5. FOR CONCRETE THRUST BLOCK, SEE DETAIL A10/C-507.
6. FOR THE REDUCED PRESSURE BACKFLOW PREVENTER, SEE DETAIL G16/C-505.
7. FOR THE DOUBLE CHECK BACKFLOW PREVENTER, SEE DETAIL A14/C-505.
8. FOR THE WATER METER BOX AND COVER, SEE DETAILS A1/C-506 AND E10/C-506.
9. FOR TYPICAL WATER LINE TRENCHING, SEE DETAIL A8/C-505.
9. FOR TYPICAL SEWER LINE TRENCHING, SEE DETAIL D15/C-504.
10. FOR AGE PAD MECHANICAL GATE VALVE FOR STORMWATER SPILL CONTROL, SEE DETAIL J1/C-812

LEGEND:

—SAN—	SEWER LINE
— W —	WATER LINE
— FW —	FIRE WATER LINE
— SD —	STORM LINE
T	TRANSFORMER, SEE ELECTRICAL PLANS
E	ELECTRICAL MANHOLE, SEE ELECTRICAL PLANS
C	TELECOM MAINTENACE HOLE, SEE TELECOM PLANS

US Army Corps of Engineers®

MARK	DESCRIPTION	DATE

ISSUE DATE: OCT 15, 2025
SOLICITATION NO.: W9128A22F0002
CONTRACT NO.: W9128A19D0012
DESIGNED BY: J. LOWE
DRAWN BY: T. CRIST
CHECKED BY: M. UNTEN
SUBMITTED BY:
SIZE: ANSI D

U.S. ARMY CORPS OF ENGINEERS
HONOLULU DISTRICT
FORT SHAFTER, HAWAII

COFFMAN ENGINEERS
745 FORT STREET, SUITE 400
HONOLULU, HAWAII 96813

JOINT BASE PEARL HARBOR-HICKAM, OAHU, HAWAII
FY22 HAWAII AIR NATIONAL GUARD (HIANG) F-22 PLUS UP
ADD EGRESS SHOP

UTILITY PLAN (BID OPTION)

SHEET ID
C-810

REVISED FINAL SUBMITTAL

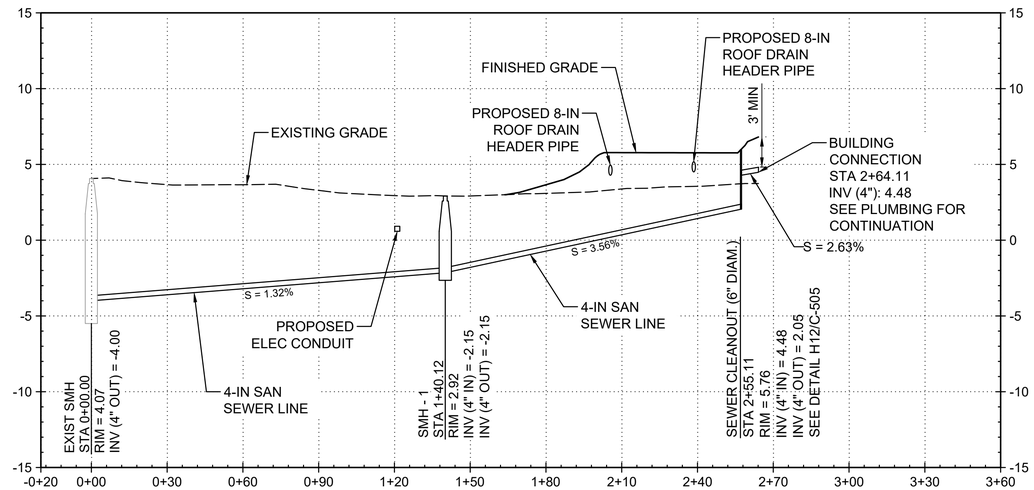

J1 4-INCH SEWER LINE PROFILE

SCALE 1" = 30' H, 1" = 5' V

0 30' 60'

0 5' 10'

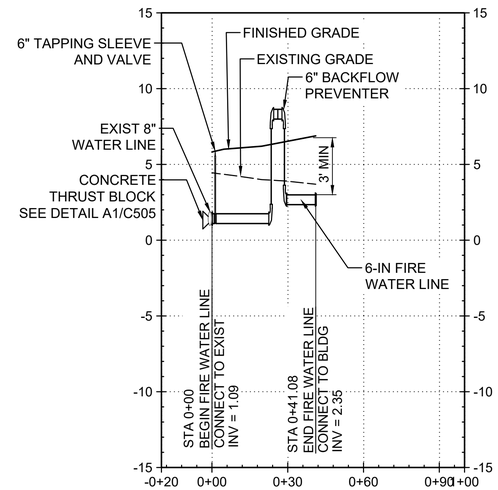

J12 6-INCH FIRE WATER LINE PROFILE

SCALE 1" = 30' H, 1" = 5' V

0 30' 60'

0 5' 10'

US Army Corps of Engineers®

MARK	DESCRIPTION	DATE

U.S. ARMY CORPS OF ENGINEERS
HONOLULU DISTRICT
FORT SHAFTER, HAWAII

COFFMAN ENGINEERS
745 FORT STREET, SUITE 400
HONOLULU, HAWAII 96813

DESIGNED BY: J. LOWE
DRAWN BY: T. CRIST
CHECKED BY: M. UNTEN
SUBMITTED BY:
SIZE: ANSI D
ISSUE DATE: OCT 15, 2025
SOLICITATION NO.: W9128A22F0002
CONTRACT NO.: W9128A19D0012

JOINT BASE PEARL HARBOR-HICKAM, OAHU, HAWAII
FY22 HAWAII AIR NATIONAL GUARD (HIANG) F-22 PLUS UP
ADD EGRESS SHOP

UTILITY PROFILES (BID OPTION)

SHEET ID

C-811

REVISED FINAL SUBMITTAL

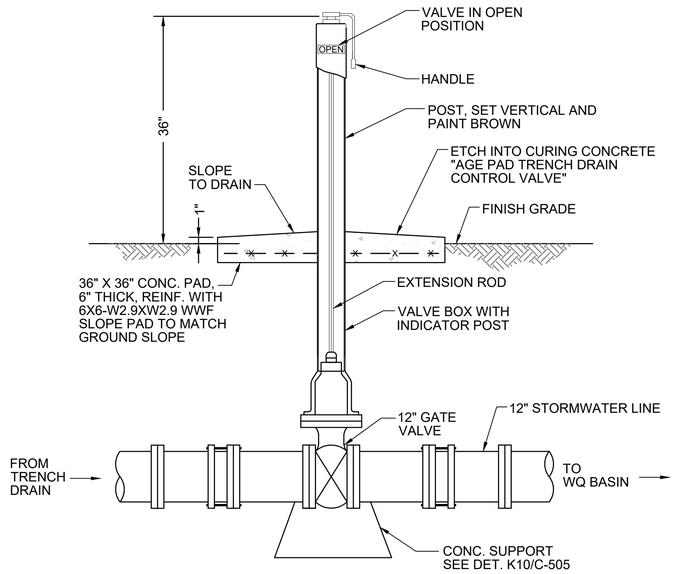

J1 AGE PAD STORMWATER CONTROL VALVE (BID OPTION)

SCALE: NTS

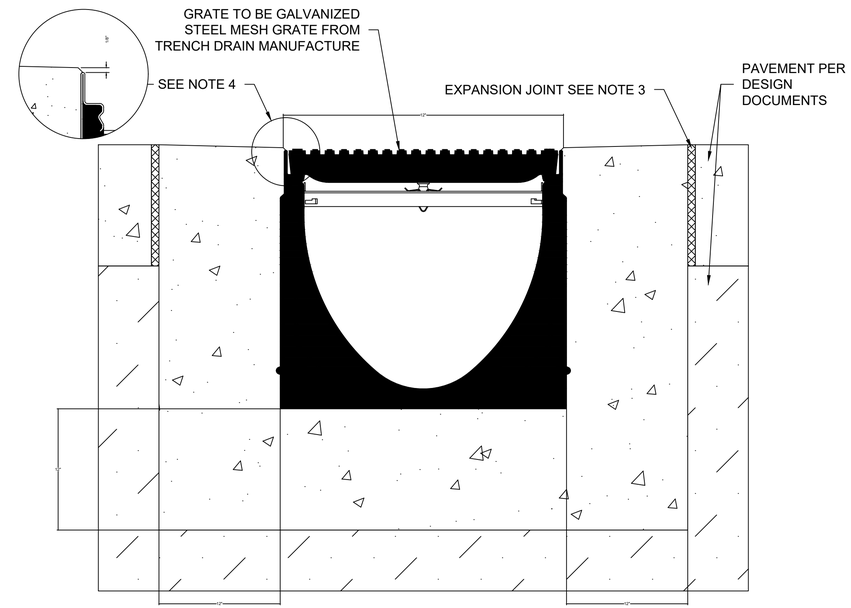

NOTES:

1. MINIMUM CONCRETE STRENGTH OF 4,000 PSI. CONCRETE SHOULD BE VIBRATED TO ELIMINATE AIR POCKETS.
2. EXPANSION AND CONTRACTION CONTROL JOINTS AND REINFORCEMENT TO PROTECT CHANNEL AND CONCRETE SURROUND.
3. THE FINISHED LEVEL OF THE CONCRETE SURROUND MUST BE APPROX. 1/8" ABOVE THE TOP OF THE CHANNEL EDGE.
4. CONCRETE BASE THICKNESS SHOULD MATCH SLAB THICKNESS.

G9 AGE PAD MODULAR TRENCH DRAIN (BID OPTION)

SCALE: NTS

GENERAL

THE SURFACE DRAINAGE SYSTEM SHALL BE A MODULAR SYSTEM UTILIZING POLYMER CONCRETE WITH STAINLESS STEEL EDGE RAILS.

MATERIALS

CHANNELS SHALL BE MANUFACTURED FROM POLYESTER RESIN POLYMER CONCRETE WITH AN INTEGRALLY CAST-IN GALVANIZED STEEL EDGE RAIL. MINIMUM PROPERTIES OF POLYMER CONCRETE WILL BE AS FOLLOWS:

COMPRESSIVE STRENGTH:	14,000 PSI
FLEXURAL STRENGTH:	4,000 PSI
TENSILE STRENGTH:	1,500 PSI
WATER ABSORPTION:	0.07%
FROST PROOF	YES
DILUTE ACID AND ALKALI RESISTANT	YES
B117 SALT SPRAY TEST COMPLIANT	YES

THE SYSTEM SHALL BE 12" NOMINAL INTERNAL WIDTH WITH A 14.2" OVERALL WIDTH AND A BUILT-IN SLOPE OF 0.5%. CHANNEL INVERT SHALL HAVE DEVELOPED "V" SHAPE. ALL CHANNELS SHALL BE INTERLOCKING WITH A MALE/FEMALE JOINT.

THE COMPLETE DRAINAGE SYSTEM SHALL BE BY ONE SINGLE MANUFACTURE FOR ALL COMPONENTS, PARTS, AND PIECES.

CHANNEL SHALL WITHSTAND LOADING TO PROPER LOAD CLASS AS OUTLINED BY EN 1433. GRATE TYPE SHALL BE APPROPRIATE TO MEET THE SYSTEM LOAD CLASS SPECIFIED AND INTENDED APPLICATION. GRATES SHALL BE SECURED USING 'QUICKLOK' BOLTLESS LOCKING SYSTEM. CHANNEL AND GRATE SHALL BE CERTIFIED TO MEET THE SPECIFIED EN 1433 LOAD CLASS. THE SYSTEM SHALL BE INSTALLED IN ACCORDANCE WITH THE MANUFACTURER'S INSTRUCTIONS AND RECOMMENDATIONS.

US Army Corps of Engineers®

MARK	DESCRIPTION	DATE

DESIGNED BY: J. LOWE
DRAWN BY: T. CRIST
CHECKED BY: M. UNTEN
SUBMITTED BY:
SIZE: ANSI D
ISSUE DATE: OCT 15, 2025
SOLICITATION NO.: W9128A22F0002
CONTRACT NO.: W9128A19D0012

U.S. ARMY CORPS OF ENGINEERS
HONOLULU DISTRICT
FORT SHAFTER, HAWAII

COFFMAN ENGINEERS
745 FORT STREET, SUITE 400
HONOLULU, HAWAII 96813

JOINT BASE PEARL HARBOR-HICKAM, OAHU, HAWAII
FY22 HAWAII AIR NATIONAL GUARD (HIANG) F-22 PLUS UP
ADD EGRESS SHOP

UTILITY DETAILS (BID OPTION)

SHEET ID
C-812

REVISED FINAL SUBMITTAL

1. GENERAL NOTES

1. ALL MATERIALS AND WORKMANSHIP SHALL CONFORM TO THE REQUIREMENTS OF THE 2018 IBC INTERNATIONAL BUILDING CODE, AS AMENDED BY UFC 1-200-01 IN ADDITION TO OTHER CODES CITED IN THE "DESIGN CODES AT STANDARDS" SECTION ON SHEET S-002

2. VERIFY ALL DIMENSIONS AND SITE CONDITIONS PRIOR TO STARTING CONSTRUCTION. NOTIFY THE CONTRACTING OFFICER OF ANY DISCREPANCIES OR INCONSISTENCIES.

3. SEE ARCHITECTURAL, CIVIL, MECHANICAL, ELECTRICAL AND PLUMBING DRAWINGS FOR MISCELLANEOUS STEEL MEMBERS & CONNECTIONS NOT SHOWN HEREIN.

4. SEE ARCHITECTURAL, CIVIL MECHANICAL, ELECTRICAL & PLUMBING DRAWINGS FOR ANCHORED, SUPPORTED AND EMBEDDED ITEMS AFFECTING THE STRUCTURAL WORK. VERIFY DETAILS AND DIMENSIONS WITH EQUIPMENT PURCHASED.

5. COORDINATE SIZES AND LOCATIONS OF OPENINGS IN FLOORS, WALLS AND ROOF WITH, ARCHITECTURAL MECHANICAL, ELECTRICAL AND PLUMBING REQUIREMENTS.

6. REFERENCE WITH TOP OF SLAB "FIRST FLOOR", FINISH FLOOR EQUAL TO 0'-0" WHERE NOTED. VERIFY ALL ACTUAL ELEVATIONS WITH CIVIL DRAWINGS.

2. CONSTRUCTION NOTES

1. BRACE ALL CONSTRUCTION AGAINST GRAVITY AND LATERAL LOADS UNTIL STRUCTURE IS COMPLETE.

2. GENERAL CONTRACTORS TO COORDINATE WITH ALL OTHER TRADES.

3. FORM AND SHORE REMOVAL:

   A. FORMS AND SHORE REMOVAL SHALL NOT INJURE OR OVERSTRESS COMPLETED OR PARTIALLY COMPLETED STRUCTURAL ELEMENTS. TIMING OF FORM AND SHORE REMOVAL SHALL BE IN ACCORDANCE WITH ACI 347.

   B. RESHORE CONCRETE ELEMENTS WHERE FORMS ARE REMOVED PRIOR TO THE SPECIFIED TIME PERIOD. DO NOT PERMIT ELEMENTS TO DEFLECT OR ACCEPT LOAD DURING FORM STRIPPING OR RESHORING.

3. SHOP DRAWING NOTES

1. NO CHANGES IN CONSTRUCTION FROM THAT SHOWN IN THE SHOP DRAWINGS REVIEWED BY THE A/E SHALL BE MADE WITHOUT THE SPECIFIC WRITTEN APPROVAL OF THE CONTRACTING OFFICER.

2. SUBMITTALS SHALL CONFORM TO REQUIREMENTS OF CONTRACT DOCUMENTS, AND SHALL BE CHECKED AND MARKED "APPROVED" BY CONTRACTOR PRIOR TO SUBMITTAL. NON-CONFORMING SUBMITTALS WILL BE RETURNED WITHOUT REVIEW.

3. SHOP DRAWINGS SHALL NOT BE REPRINTS OF CONTRACT DOCUMENTS & WILL BE BASIS FOR RETURNING THEM WITHOUT REVIEW.

4. EARTHWORK NOTES

1. ALL EXCAVATION SHALL BE PROTECTED AND GUARDED BY THE CONTRACTOR AGAINST DANGER TO LIFE, LIMB AND PROPERTY.

2. SHORING, SHEETING, CRIBBING AND LAGGING AS REQUIRED TO PRESERVE THE EXCAVATIONS, EARTH BANKS AND ADJACENT STRUCTURES AND PROPERTY FREE FROM DAMAGE RESULTING FROM THE WORK SHALL BE PROVIDED AND INSTALLED BY THE CONTRACTOR.

3. UNLESS SHOWN OTHERWISE, INTERIOR SLABS ON GRADE SHALL BE UNDERLAIN WITH 15MIL VAPOR BARRIER.

5. CAST IN PLACE CONCRETE

1. CONCRETE WORK SHALL CONFORM TO ACI SPECIFICATIONS FOR STRUCTURAL CONCRETE FOR STRUCTURES & BUILDINGS, ACI 301, LATEST EDITION REFERENCED IN BUILDING CODE, ACI 318-14.

2. THE CONCRETE REQUIREMENTS ARE:

   A. CEMENT SHALL BE TYPE I OR II CONFORMING TO ASTM C150.

   B. FINE AND COARSE AGGREGATES SHALL CONFORM TO ASTM C33.

   C. MIX REQUIREMENTS ARE:

LOCATION	28 DAY STRENGTH (PSI)	MAXIMUM AGGREGATE SIZE	MAXIMUM WATER TO CEMENT RATIO
CAPPING BEAMS AND PILECAPS, STRUCTURAL SLABS	5000	3/4"	0.40
WALLS	5000	3/4"	0.40

3. USE OF ADMIXTURE NOT SPECIFIED SHALL BE SUBJECTED TO CONTRACTING OFFICER APPROVAL.

5. CAST IN PLACE CONCRETE (CONT.)

4. UNLESS OTHERWISE SHOWN, CONSTRUCTION JOINTS SHALL BE LOCATED BY THE CONTRACTOR SUBJECT TO THE APPROVAL OF THE CONTRACTING OFFICER. THEY SHALL BE SO LOCATED AS TO NOT IMPAIR THE STRENGTH OF THE STRUCTURE AND TO MINIMIZE SHRINKAGE STRESSES. PROVIDE DOWEL AS DIRECTED AND THOROUGHLY AND ROUGHEN SURFACES BEFORE PROCEEDING WITH NEXT POUR. (THIS REQUIREMENT APPLIES TO FLOORS AND WALLS).
   THE USE OF ANY CALCIUM CHLORIDE IN ANY CONCRETE IS PROHIBITED."

5. FORMWORK AND EMBEDMENT SHALL MEET THE FOLLOWING:"

   A. ALL EXPOSED EDGES OF CONCRETE SHALL BE CHAMFERED 3/4" INSIDE FORMS OR TOOLED TO 3/4" RAD., UNLESS NOTED OTHERWISE.

   B. SLABS ON GRADE SHALL HAVE CONSTRUCTION JOINTS AND CONTROL JOINTS (SAWN JOINTS), LOCATED AS SHOWN ON THE DRAWINGS. CONTRACTOR SHALL LOCATE SLAB JOINTS ON SHOP DRAWINGS.

   C. WHERE NECESSARY, VERTICAL CONSTRUCTION JOINTS SHALL BE LOCATED AT MIDSPAN. ALL JOINTS SHALL BE THOROUGHLY CLEANED AND ROUGHENED TO 1/4" PRIOR TO PLACING ADJACENT CONCRETE.

   D. THE CONTRACTOR SHALL BE RESPONSIBLE FOR THE DESIGN OF ALL FORMWORK, TEMPORARY BRACING AND SHORING.

6. AT CHANGES IN DIRECTION OF CONCRETE WALLS , FOOTINGS AND TIE BEAMS, PROVIDE CORNER BARS OF SAME SIZE AND SPACING AS HORIZONTAL STEEL AS SHOWN ON THE DRAWINGS.

7. WHERE PIPING PENETRATES CONCRETE BEAMS, PLACE TWO #3 STIRRUPS AT 3" O.C. EACH SIDE OF PIPE, UNLESS OTHERWISE NOTED.

8. PROVIDE STANDARD HOOKS AT DISCONTINUOUS ENDS OF TOP BAR.

6. REINFORCING STEEL NOTES

1. STRENGTHS - REINFORCING STEEL MUST BE DEFORMED BARS CONFORMING TO ASTM A706, GRADE 60. ALL REINFORCING STEEL TO BE WELDED SHALL BE ASTM A706. ALL WELDING SHALL BE DONE BY CERTIFIED WELDERS IN ACCORDANCE WITH AWS 1.4.

   ASTM A615, GRADE 60, MAY BE USED SUBJECT TO THE FOLLOWING REQUIREMENTS:

   A. ACTUAL YIELD STRENGTH BASED ON MILL TESTS DOES NOT EXCEED Fy BY MORE THAN 18,000 PSI.

   B. RATIO OF THE ACTUAL TENSILE STRENGTH TO THE ACTUAL YIELD STRENGTH IS AT LEAST 1.25.

   C. MINIMUM FRACTURE ELONGATION IN 8 INCHES SHALL BE AT LEAST 14 PERCENT FOR BAR SIZES NO. 3 THROUGH NO. 6 AND AT LEAST 12 PERCENT FOR BAR SIZES NO. 7 THROUGH NO. 11.

   D. MINIMUM UNIFORM ELONGATION MUST BE AT LEAST 9 PERCENT FOR BAR SIZES NO. 3 THROUGH NO. 10, AND AT LEAST 6 PERCENT FOR BAR SIZES NO. 11, NO. 14, AND NO. 18.

2. ALL BUILDINGS ARE LOCATED IN ENVIRONMENTAL SEVERITY CLASSIFICATION (ESC) C5.

3. MINIMUM CONCRETE CLEAR COVER (FOR CAST-IN-PLACE):

   A. CONCRETE POURED AGAINST EARTH . . . . . 3"

   B. CONCRETE POURED AGAINST FORMS AND LATER EXPOSED TO EARTH AND/OR WEATHER . . . . . 2"

   C. WALLS EXTERIOR SURFACE . . . . . 2"

   D. WALLS INTERIOR SURFACE . . . . . 1 1/2"

   E. SLABS AND WALLS (EXPOSED TO WEATHER) . . . . . 2"

4. BAR BENDS, HOOKS, AND OFFSETS SHALL BE IN ACCORDANCE WITH THE ACI RECOMMENDATIONS.

5. SPECIAL SPACER CHAIRS: PLASTIC SPACER "CHAIRS" SHALL BE USED TO MAINTAIN REQUIRED MINIMUM CONCRETE CLEAR COVER FOR ALL BEAM, COLUMN, AND WALL REINFORCING AT FACES EXPOSED TO WEATHER.

7. CONCRETE BLOCK NOTES

1. MASONRY UNITS SHALL CONFORM TO TMS 402-16 AND 602-16.

2. ALL STANDARD UNITS SHALL BE 2-CELL TYPE, UNLESS OTHERWISE SHOWN.

3. PROVIDE VERTICAL CONTROL JOINTS IN WALLS AT 25 FEET O.C. OR 1.5 TIMES THE HEIGHT OF WALL WHICHEVER IS LOWER, SUBJECT TO CONTRACTING OFFICER APPROVAL.

4. CONCRETE BLOCK UNITS SHALL BE LAID IN RUNNING BOND PATTERN UNLESS OTHERWISE SPECIFIED AND/OR SHOWN.

5. ALL CONCRETE MASONRY UNITS SHALL BE MODULAR, SIZE AS INDICATED ON PLANS, CONFORMING TO ASTM C90, GRADE N-II, FULLY GROUTED. ALL CMU HAS TO ATTAIN AN ULTIMATE COMPRESSIVE STRENGTH f'm= 2,000 PSI.

6. MORTAR SHALL CONFORM TO ASTM C270, TYPE S.

7. GROUT SHALL CONFORM TO ASTM C476 WITH A MINIMUM STRENGTH OF 3000 PSI.

8. STRUCTURAL STEEL NOTES

1. STRUCTURAL STEEL HAS BEEN DESIGNED IN ACCORDANCE WITH THE BUILDING CODE AND AISC 360-16.

2. STRUCTURAL STEEL SHALL MEET THE FOLLOWING REQUIREMENTS UNLESS NOTED OTHERWISE ON THE DRAWINGS:

TYPE:		ASTM	GRADE
A.	WIDE FLANGE TYPE SHAPES W,	A992	GRADE 50, 50 KSI
B.	ANGLES, CHANNELS AND PLATES	A36	GRADE 36, 36 KSI
C.	PIPE	A53	GRADE B, 35 KSI
D.	HOLLOW STRUCTURAL STEEL	A500	GRADE C, 50 KSI
E.	ANCHOR BOLTS	A1554	GRADE 36, 36 KSI
F.	HIGH STRENGTH BOLTS	F3125	GRADE A325
G.	HEADED STUDS	ASTM A108	GRADE B

3. ALL CONNECTION SHOP DRAWINGS SHALL BE SUBMITTED FOR APPROVAL.

4. ALL WELDING SHALL BE IN ACCORDANCE WITH LATEST AWS D1.1 & USE E70XX ELECTRODES. ALL WELDS SHALL BE TOUCHED UP PER SPECIFICATIONS.

5. UNLESS SHOWN OTHERWISE ALL CONNECTIONS SHALL DEVELOP THE FULL STRENGTH OF MEMBER CONNECTED FOR SHEAR AND FLEXURE.

6. PLATE INSERTS EMBEDDED IN CONCRETE SHALL HAVE THE ANCHORS (BARS OR RODS) FULLY WELDED TO DEVELOP THE FULL STRENGTH OF THE ANCHORS.

7. UNLESS SHOWN OTHERWISE, ALL EMBEDDED BOLTS, ANCHORS, PLATES, INSERTS, ETC., SHALL BE HOT-DIPPED GALVANIZED AFTER FABRICATION.

8. ALL STRUCTURAL STEEL SHALL BE HOT DIPPED GALVANIZED AND ALL WELDS SHALL BE WELL COVERED WITH COLD GALVANIZED COATING.

9. POST INSTALLED ANCHORS

1. POST INSTALLED ANCHORS SHALL BE USED ONLY WHERE SPECIFIED ON THE STRUCTURAL DRAWINGS.

2. THE INSTALLATION OF POST INSTALLED ANCHORS FOR MISSING OR MISPLACED CAST IN-PLACE ANCHORS SHALL BE APPROVED BY THE CONTRACTING OFFICER.

3. SEE SPECIFICATIONS 05 05 20 FOR ADDITIONAL REQUIREMENTS.

4. ALL POST INSTALLED ANCHOR SHALL BE TYPE 316 STAINLESS STEEL.

5. PROVIDE POST INSTALLED ANCHORS THAT MEET THE MINIMUM ALLOWABLE VALUES SHOWN IN THE TABLE BELOW:

ANCHOR DIAMETER	SUBSTRATE	EFFECTIVE EMBEDMENT	CONFINED TENSION PROOF LOAD	CONFINED SHEAR PROOF LOAD
1/2"	CONCRETE	4 1/2"	5275 LBS	7935 LBS
1/2"	CMU	4 1/2"	1319 LBS	2181 LBS
3/4"	CONCRETE	6 3/4"	10755 LBS	17840 LBS
	CMU	6 3/4"	1975 LBS	2756 LBS

10. STEEL DECKING NOTES

1. STEEL DECK SHALL BE CAPABLE OF SUPPORTING THE LOADS SPECIFIED ON THE DRAWINGS FOR THE INDICATED SPANS.

2. STEEL DECK ASTM A653, fy = 50 KSI WITH G90 GALVANIZE.

3. GAUGE THICKNESS OF STEEL DECK SHALL BE AS SHOWN ON PLANS

4. DEFLECTION OF ROOF AND FLOOR DECKING SHALL NOT EXCEED 1/240 OF SPAN UNDER FULL DESIGN LOAD.

5. STEEL DECK WORK SHALL BE IN ACCORDANCE WITH THE " BASIC DESIGN SPECIFICATIONS" OF THE STEEL DECK INSTITUTE.

6. STEEL DECK SHALL BE INSTALLED IN THREE SPANS. WHERE POSSIBLE.

7. SEE DETAIL BELOW FOR ATTACHMENT REQUIREMENTS:

   A. DECK SHALL BEAR ON SUPPORTS 2" MINIMUM AND END CAPPED A MINIMUM OF 2". FASTEN DECK AS SHOWN BELOW.

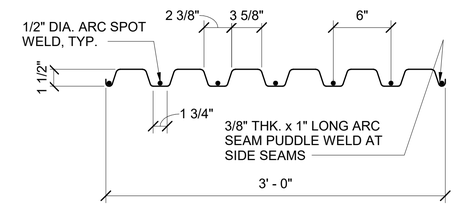

TYPICAL METAL ROOF DECK PROPERTIES

   B. BOUNDARY WELDS TO SUPPORT PARALLEL TO THE RIBS SHALL BE 1/2" DIA. PLUG WELDS AT 8" MAXIMUM SPACING.

   C. SIDE SEAMS SHALL BE TOP SEAM WELDED AT 6" O.C.

   D. DIAPHRAGM CAPACITY = 1709 LBS/FT

8. CEILING AND UTILITIES HANGER SHOULD NOT BE ATTACHED TO STEEL DECK.

11. DESIGN CODES AND STANDARDS

1. UFC 1-200-01, DOD BUILDING CODE (GENERAL BUILDING REQUIREMENTS), DATED 10/01/2020

2. UFC 3-301-01, STRUCTURAL ENGINEERING, WITH CHANGE 1, DATED 02/04/2022

3. AMERICAN CONCRETE INSTITUTE (ACI) 318-14, BUILDING CODE REQUIREMENTS FOR STRUCTURAL CONCRETE, 2014 EDITION

4. AMERICAN INSTITUTE OF STEEL CONSTRUCTION (AISC) 360-16, SPECIFICATION FOR STRUCTURAL STEEL BUILDINGS, 2016 EDITION

5. AISC STEEL CONSTRUCTION MANUAL, 14TH EDITION

6. AMERICAN SOCIETY OF CIVIL ENGINEERS (ASCE) 7-16, MINIMUM DESIGN LOADS FOR BUILDINGS AND OTHER STRUCTURES, 2016 EDITION

7. AMERICAN WELDING SOCIETY (AWS) D1.1, STRUCTURAL WELDING CODE

8. INTERNATIONAL CODE COUNCIL (ICC), INTERNATIONAL BUILDING CODE (IBC), 2018 EDITION

9. THE MASONRY SOCIETY (TMS) 402-16 AND 602-16, BUILDING CODE REQUIREMENTS AND SPECIFICATIONS FOR MASONRY STRUCTURE, 2016 EDITION

10. STANDARD FOR STEEL DECK, SDI 2022.

US Army Corps of Engineers ®

MARK	DESCRIPTION	DATE

File Path: M:\2018\2018_Z24.002 DPL_PBM HANG F-22 Pete-Up\C Dwgs\Struct\00 Current Revit Model\NMD\S0060F_ES_STRUCT_v23.rvt

Plot Date: 10/15/2025 4:24:21 PM

DESIGNED BY: C. HOKIE, CAPUCAO
DRAWN BY: R. TANGONAN
CHECKED BY: B. FUNG
SUBMITTED BY: B. FUNG
SIZE: ANSI D
ISSUE DATE: 15 OCTOBER 2025
SOLICITATION NO.: W912BA22F0002
CONTRACT NO.: W912BA15B0072

US ARMY CORPS OF ENGINEERS
HONOLULU DISTRICT
FORT SHAFTER, HAWAII

SSFM INTERNATIONAL, INC
501 SUMNER STREET, SUITE 620
HONOLULU, HI 96817

JOINT BASE PEARL HARBOR-HICKAM, OAHU, HAWAII
FY22 HAWAII AIR NATIONAL GUARD (HANG) F-22 PLUS-UP
ADD EGRESS SHOP

STRUCTURAL NOTES

SHEET ID
S-001

REVISED FINAL SUBMITTAL

12. DESIGN DATA

1. SUPERIMPOSED LOADS:
   - A. MECHANICAL/ELECTRICAL AND CEILING HUNG SYSTEM = 10 psf
   - B. ROOFING, 5" THK. INSULATION, AND BACKER BD. = 20 psf
2. LIVE LOADS:
   - A. ROOF = 20 psf
   - B. ADMINISTRATION = 50 psf
   - C. TOOL STORAGE AND WORK AREA = 125 psf
   - D. EXPLOSIVE STORAGE = 125 psf
   - E. HOIST BEAM (MONORAIL) = 4000 LBS.
3. WIND LOADS:

WIND LOADS	
BASIC WIND SPEED (3 SECOND GUST), Vult	145 MPH
RISK CATEGORY	III
WIND EXPOSURE	C
INTERNAL PRESSURE COEFFICIENT (ENCLOSED)	± 0.18

4. SEISMIC LOADS:

SEISMIC LOADS	
DESIGN BASE SHEAR	76.85 KIPS
SEISMIC IMPORTANCE FACTOR: Ie	1.25
RISK CATEGORY	III
SPECIAL RESPONSE ACCELERATIONS:	
Ss:	0.566
S1:	0.162
SITE CLASS	E
Sds:	0.601
Sd1:	0.46
SEISMIC DESIGN CATEGORY:	D
BASIC-SEISMIC-FORCE-RESISTING SYS:	BEARING WALL SPECIAL REINFORCED CONCRETE SHEARWALL
RESPONSE MODIFICATION FACTOR:	5
SEISMIC RESPONSE COEFFICIENT: Cs	0.19
ANALYSIS PROCEDURE:	EQUIVALENT LATERAL

5. TSUNAMI LOADS:

TSUNAMI LOADS	
TSUNAMI IMPORTANCE FACTOR I_{tsu}	1.25
TSUNAMI RISK CATEGORY	III
DEPTH INCREASE DUE TO SEA LEVEL RISE	1.3 FT
INUNDATION DEPTH	13.73 FT
FLOW VELOCITY	20.95 FPS
2065 DRSL SCENARIO	MEDIUM

13.FOUNDATION NOTES

1. THE FOUNDATION HAS BEEN DESIGNED ON THE RECOMMENDATIONS CONTAINED IN THE GEOTECHNICAL REPORTS. TITLED " GEOTECHNICAL ENGINEERING EXPLORATION FY22 HAWAII AIR NATIONAL GUARD F-22 PLUS UP JOINT BASE PEARL HARBOR - HICKAM HONOLULU, OHAU, HAWAII" DATED NOVEMBER 15, 2024 PREPARED BY GEOLABS, INC.
   - A. PILE FOUNDATIONS, SEE NOTES ON DRAWINGS S-501.
   - B. ALLOWABLE SOIL BEARING PORESSURE (FOR GOX PAD) 2000 PSF.
   - C. ALLOWABLE SOIL LATERAL LOAD RESISTANCE

	STATIC CONDITION	TRANSIENT CONDITION	NOMINAL VALUE
ALLOWABLE COEFFICIENT OF FRICTION	0.38	0.53	0.58
ALLOWABLE PASSIVE EARTH PRESSURE (pcf)	240	330	360

14. SPECIAL INSPECTION NOTES

1. THE CONTRACTOR SHALL RETAIN ONE OR MORE SPECIAL INSPECTORS WHO SHALL PROVIDE INSPECTIONS DURING CONSTRUCTION IDENTIFIED IN SPECIFICATION SECTION 01 45 35. SPECIAL INSPECTOR QUALIFICATIONS ARE LISTED IN SPECIFICATION 01 45 35 "SPECIAL INSPECTIONS".
2. THE FOLLOWING STRUCTURAL WORK FOR THIS PROJECT REQUIRE SPECIAL INSPECTIONS:
   - A. REINFORCING STEEL
   - B. CONCRETE CONSTRUCTION
   - C. MASONRY CONSTRUCTION
   - D. POST-INSTALLED ANCHORS
   - E. STRUCTURAL WELDING
   - F. HIGH-STRENGTH BOLTING
   - G. STEEL CECK
   - H. DEEP FOUNDATIONS - MICROPILES

15. MISCELLANEOUS

1. CONCRETE PADS FOR MECHANICAL AND ELECTRICAL EQUIPMENT ON FLOORS SHALL BE NO LESS THAN 4" HIGH UNLESS OTHERWISE NOTED AND REINFORCED WITH #3 BARS ON 12" O.C. EACH WAY, 2" FROM TOP OF SLAB. WHEN THE PAD EXCEEDS 10" IN THICKNESS, REINFORCE WITH #3 BARS ON 12" O.C. EACH WAY, TOP AND BOTTOM. ANCHOR PAD TO SLAB WITH #4 DOWELS AT 24" O.C. EACH WAY, CAST OR CHEMICALLY ADHERED INTO SUPPORTING SLAB.
2. CONTRACTOR SHALL SUPPLY ALL ITEMS FOR ATTACHING MECHANICAL AND ELECTRICAL EQUIPMENT TO THE BUILDING STRUCTURE TO RESIST ALL LOADS INCLUDING WIND FORCES. ATTACHMENT SHALL BE MADE SO AS NOT TO OVERSTRESS STRUCTURAL MEMBERS. COORDINATE THE ATTACHMENTS AND LOCATIONS OF THE EQUIPMENT WITH THE STRUCTURAL SHOP DRAWINGS. REFER TO THE MECHANICAL AND ELECTRICAL DRAWINGS FOR ADDITIONAL REQUIREMENTS.
3. SUBSTITUTION OF EXPANSION ANCHORS FOR ADHESIVE ANCHORS OR EMBEDDED ANCHORS SHOWN ON THE DRAWINGS WILL NOT BE PERMITTED UNLESS APPROVED BY THE CONTRACTING OFFICER IN ADVANCE.
4. THE CONTRACTOR SHALL PROVIDE THE FOLLOWING:
   - A. VERIFICATION OF ALL DIMENSIONS, ELEVATIONS, OPENING SIZES, MECHANICAL EQUIPMENT WEIGHTS PRIOR TO STARTING WORK.
   - B. REVIEW AND APPROVE ALL SHOP DRAWINGS PRIOR TO SUBMITTAL, NOTING CHANGES MADE WHICH DO NOT COMPLY WITH DESIGN DRAWINGS.
   - C. PROVIDE TEMPORARY BRACING AND SHORING TO PREVENT EXCESSIVE DEFLECTIONS AND DAMAGE DURING CONSTRUCTION. DESIGN OF TEMPORARY BRACING AND SHORING SHALL BE THE RESPONSIBILITY OF THE CONTRACTOR.

16. STRUCTURAL ABBREVIATIONS

ABBREV. . . . ABBREVIATION
ADD. . . . ADDITIVE
ADD'L . . . ADDITIONAL
ALT. . . . ALTERNATE/ALTERNATIVE
A.C.I. . . . AMERICAN CONCRETE INSTITUTE
A/E . . . ARCHITECT/ENGINEER
A.I.S.C. . . . AMERICAN INSTITUTE OF STEEL CONSTRUCTION
A.I.S.I. . . . AMERICAN IRON AND STEEL INSTITUTE
A.S.T.M. . . . AMERICAN SOCIETY OF TESTING MATERIALS
A.W.S. . . . AMERICAN WELDING SOCIETY
ARCH. . . . ARCHITECTURE/ ARCHITECTURAL
B.P. . . . BASE PLATE/BEARING PLATE
BLK. . . . BLOCK
BLDG. . . . BUILDING
BOT . . . BOTTOM
CIP . . . CAST-IN-PLACE
CTR . . . CENTER
CTRD . . . CENTERED
CL. . . . CENTER LINE
CLR. . . . CLEAR/CLEARANCE
COL. . . . COLUMN
CO. . . . COMPANY
CONC. . . . CONCRETE
CC . . . CONCRETE COLUMN
CMU . . . CONCRETE MASONRY UNIT
COORD. . . . COORDINATE
CONT. . . . CONTINUOUS
CONN. . . . CONNECTION
CONST. . . . CONSTRUCTION
CS.J. . . . CONSTRUCTION JOINT
C.J. . . . CONTROL JOINT
CMP. . . . CORRUGATED METAL PIPE
C.F. . . . CUBIC FEET (FOOT)
C.Y. . . . CUBIC YARD
DIA. . . . DIAMETER
DIM. . . . DIMENSION
DIST. . . . DISTANCE
DN. . . . DOWN
WG. . . . DRAWING
DIAG . . . DIAGONAL
DET . . . DETAIL
EA. . . . EACH
E.E. . . . EACH END
E.F. . . . EACH FACE
E.S. . . . EACH SIDE
E.W. . . . EACH WAY
ELEC. . . . ELECTRIC/ELECTICAL
EL., ELEV. . . . ELEVATION
ENGR. . . . ENGINEER
EOR . . . ENGINEER OF RECORD
EXIST. . . . EXISTING
EXP. . . . EXPANSION
EXT. . . . EXTERIOR
FT. . . . FEET/FOOT
FDN. . . . FOUNDATION
FIN. . . . FINISH
FIN. GR. . . . FINISH GRADE
F.F. FLR. . . . FINISH FLOOR
FTG. . . . FOOTING
GA. . . . GAGE/GAUGE
GALV. . . . GALVANIZED
G.C. . . . GENERAL CONTRACTOR
GEN. . . . GENERAL
G.S. . . . GALVANIZED STEEL
G.L. . . . GRID LINE
HORIZ. . . . HORIZONTAL
HT. . . . HEIGHT
IN. . . . INCH
INT. . . . INTERIOR
JT. . . . JOINT
MID. . . . MIDDLE
MFR. . . . MANUFACTURER
MAX. . . . MAXIMUM
MECH. . . . MECHANICAL
MIN. . . . MINIMUM
MISC. . . . MISCELLANEOUS
N.T.S. . . . NOT TO SCALE
NO. . . . NUMBER
O.C. . . . ON CENTER
PL. . . . PLATE
P.S.F. . . . POUNDS PER SQUARE FOOT
P.S.I. . . . POUNDS PER SQUARE INCH
REINF. . . . REINFORCING
SCHED. . . . SCHEDULE
SPECS. . . . SPECIFICATIONS
SQ. . . . SQUARE
S.S. . . . STAINLESS STEEL
STD. . . . STANDARD
STRUCT . . . STRUCTURAL
SIM . . . SIMILAR
TEMP. . . . TEMPERATURE
THK. . . . THICK
T&B . . . TOP AND BOTTOM
TYP. . . . TYPICAL
U.N.O. . . . UNLESS NOTED OTHERWISE
VERT. . . . VERTICAL
WF. . . . WALL FOOTING
WT. . . . WEIGHT

US Army Corps of Engineers ®

MARK	DESCRIPTION	DATE

DESIGNED BY: C. HOKIE, CAPUCAO
DRAWN BY: R. TANGONAN
CHECKED BY: B. FUNG
SUBMITTED BY: B. FUNG
SIZE: ANSI D
ISSUE DATE: 15 OCTOBER 2025
SOLICITATION NO.: W9128A22F0002
CONTRACT NO.: W9128A19B0072

US ARMY CORPS OF ENGINEERS
HONOLULU DISTRICT
FORT SHAFTER, HAWAII

SSFM INTERNATIONAL, INC.
501 SUMMER STREET, SUITE 620
HONOLULU, HI 96817

JOINT BASE PEARL HARBOR-HICKAM, OAHU, HAWAII
FY'22 HAWAII AIR NATIONAL GUARD (HANG) F-22 PLUS-UP
ADD EGRESS SHOP

STRUCTURAL NOTES

SHEET ID
S-002

Plot Date: 10/15/2025 4:24:22 PM File Path: M:\2019\2018_ZA4.002 DPL_FMM HANG F-22 Plus-Up\CD Dwgs\Struct\00 Current Revit Model\NMD\200600_ES_STRUCT_v23.rvt

REVISED FINAL SUBMITTAL

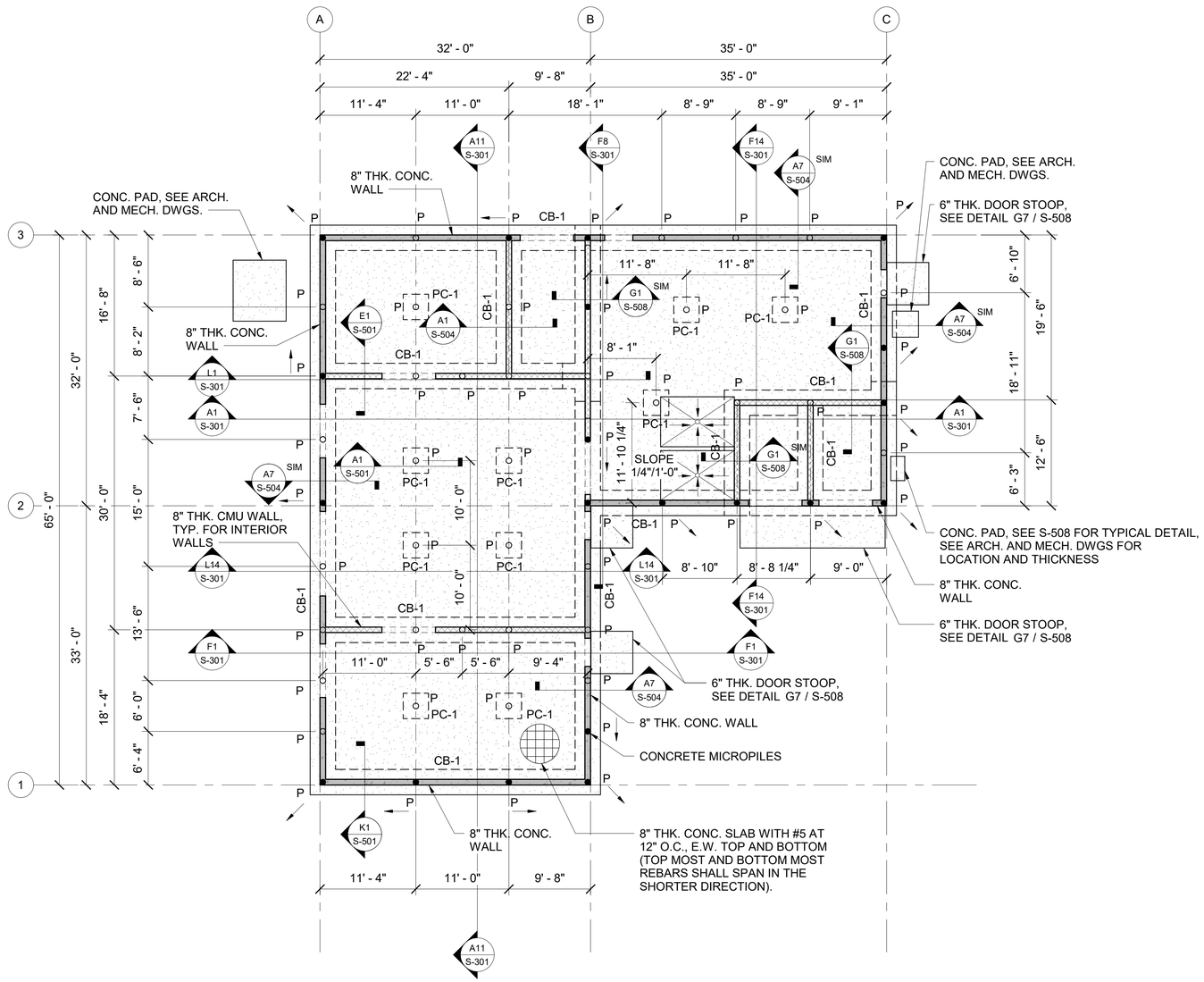

A1 EGRESS FACILITY - FOUNDATION PLAN

SCALE: 1/8" = 1'-0"

REFERENCE DRAWINGS

1. SEE S-00X SERIES SHEETS FOR GENERAL NOTES.
2. SEE S-10X SERIES SHEETS FOR FLOOR PLANS.
3. SEE S-20X SERIES SHEETS FOR BUILDING ELEVATIONS.
4. SEE S-30X SERIES SHEETS FOR BUILDING SECTIONS.
5. SEE S-50X SERIES SHEETS SECTIONS AND DETAILS.

SPECIAL NOTES:

1. SEE ARCHITECTURAL DRAWINGS FOR DIMENSIONS,ELEVATIONS AND DETAILS NOT SHOWN ON THE STRUCTURAL DRAWINGS.
2. SEE ARCHITECTURAL DRAWINGS FOR OPENING SIZES.
3. THICKNESS OF CONCRETE SLABS SHOWN ARE MINIMUM AND SHALL BE MAINTAINED AT ALL SLOPED AND DEPRESSED PORTION.
4. SEE CIVIL DRAWINGS FOR FINISH FLOOR ELEVATIONS.
5. ALL WALL PENETRATIONS ARE NOT SHOWN. SEE MECHANICAL AND ELECTRICAL DRAWINGS.

LEGEND:

	8" THK. CONCRETE WALL
	8" THK. CMU WALL
P ○	VERTICAL MICROPILE
P → ●	BATTERED MICROPILE INDICATING THE DIRECTION OF SLOPE
CB-1	DENOTES CAPPING BEAM
PC-1	DENOTES PILECAP

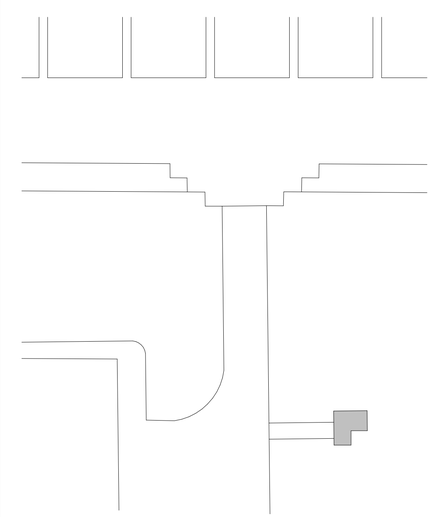

N KEY PLAN (NTS)

EGRESS FACILITY

US Army Corps of Engineers ®

MARK	DESCRIPTION	DATE

M:\2018\2018_Z24.002 DPL_FRM HANG F-22 Plus-Up\C Dwgs\Struct\00 Current Revit Model\NAVD2008\97_ES_STRUCT_v23.rvt

File Path:

Plot Date: 10/15/2025 4:24:23 PM

DESIGNED BY: C. HOKIE, CAPUCAO
DRAWN BY: R. TANGONAN
CHECKED BY: B. FUNG
SUBMITTED BY: B. FUNG
SIZE: ANSI D

ISSUE DATE: 15 OCTOBER 2025
SOLICITATION NO.: W912BA22F0002
CONTRACT NO.: W912BA15B0072

US ARMY CORPS OF ENGINEERS
HONOLULU DISTRICT
FORT SHAFTER, HAWAII

SSFM INTERNATIONAL, INC.
501 SUMNER STREET, SUITE 620
HONOLULU, HI 96817

JOINT BASE PEARL HARBOR-HICKAM, OAHU, HAWAII
FY'22 HAWAII AIR NATIONAL GUARD (HIANG) F-22 PLUS-UP
ADD EGRESS SHOP

FOUNDATION PLAN

SHEET ID

S-101

REVISED FINAL SUBMITTAL

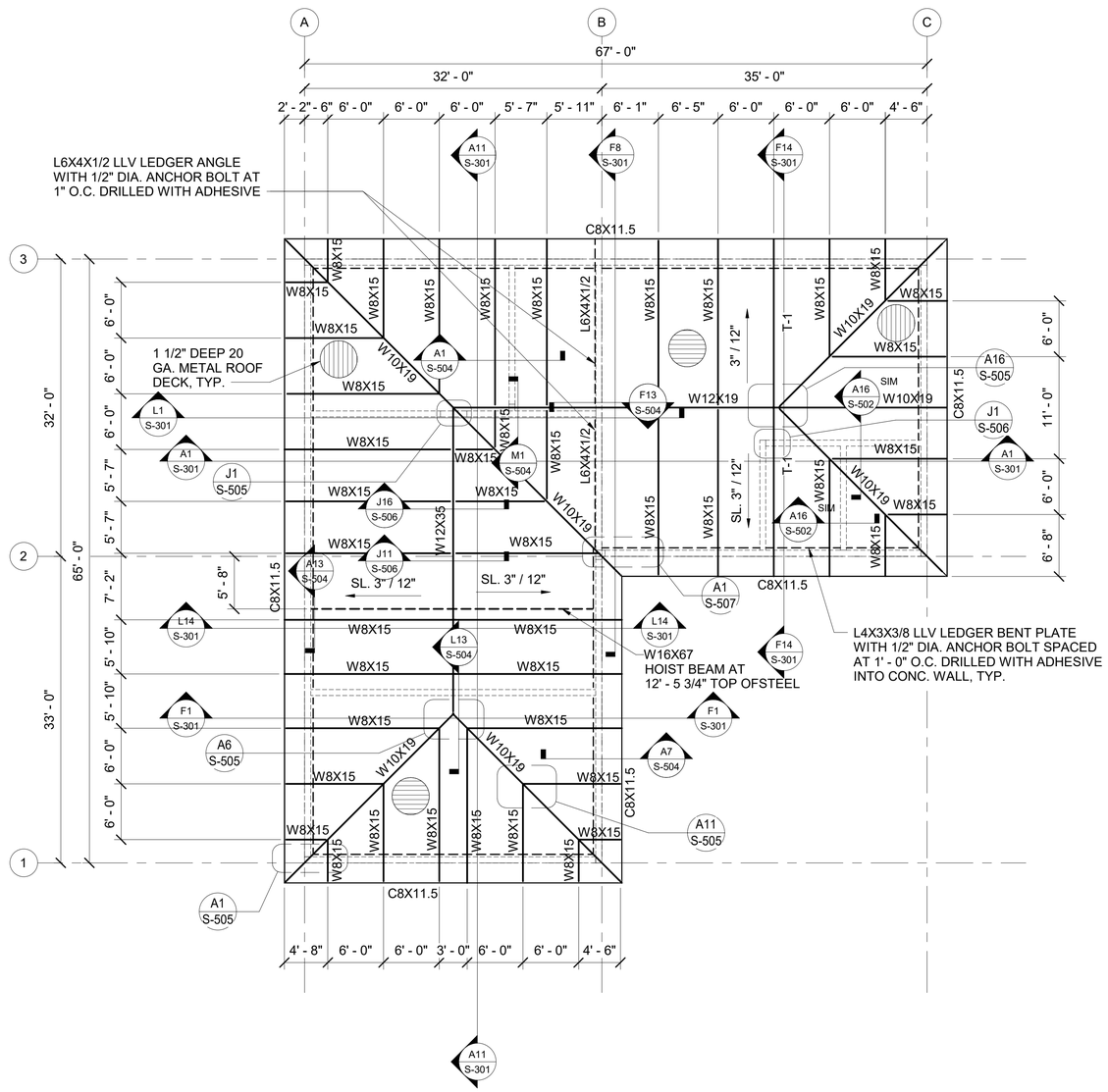

REFERENCE DRAWINGS

1. SEE S-00X SERIES SHEETS FOR GENERAL NOTES AND TYPICAL DETAIL.
2. SEE S-10X SERIES SHEETS FOR FLOOR PLANS.
3. SEE S-20X SERIES SHEETS FOR EXTERIOR ELEVATIONS.
4. SEE S-30X SERIES SHEETS FOR BUILDING SECTIONS.

SPECIAL NOTES:

1. SEE ARCHITECTURAL DRAWINGS FOR DIMENSIONS,ELEVATIONS AND DETAILS NOT SHOWN ON THE STRUCTURAL DRAWINGS.
2. SEE ARCHITECTURAL DRAWINGS FOR OPENING SIZES.
3. THICKNESS OF CONCRETE SLABS SHOWN ARE MINIMUM AND SHALL BE MAINTAINED AT ALL SLOPED AND DEPRESSED PORTION.
4. SEE CIVIL DRAWINGS FOR FINISH FLOOR ELEVATIONS.
5. ALL WALL PENETRATIONS ARE NOT SHOWN. SEE MECHANICAL AND ELECTRICAL DRAWINGS.

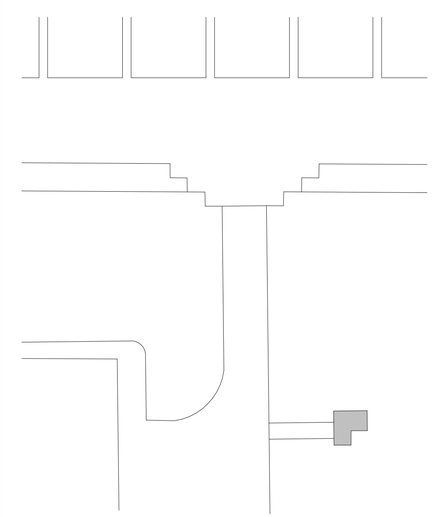

KEY PLAN (NTS)
EGRESS FACILITY

PLAN NORTH

0 4' 8' 16'

A EGRESS FACILITY - ROOF FRAMING PLAN
SCALE: 1/8" = 1'-0"

US Army Corps of Engineers ®

MARK	DESCRIPTION	DATE

File Path: M:\2018\2018_Z24.002 DPL_FRM HANG F-22 Pole-Up\CD Dwgs\Struct\00 Current Revit Model\RAMD\208087_ES_STRUCT_v23.rvt

Plot Date: 10/15/2025 4:24:24 PM

DESIGNED BY: C. HOKIE, CAPUCAO
DRAWN BY: R. TANGONAN
CHECKED BY: B. FUNG
SUBMITTED BY: B. FUNG
SIZE: ANSI D
ISSUE DATE: 15 OCTOBER 2025
SOLICITATION NO.: W912BA22F0002
CONTRACT NO.: W912BA15B0012

US ARMY CORPS OF ENGINEERS
HONOLULU DISTRICT
FORT SHAFTER, HAWAII

SSFM INTERNATIONAL, INC.
501 SUMMER STREET, SUITE 620
HONOLULU, HI 96817

JOINT BASE PEARL HARBOR-HICKAM, OAHU, HAWAII
FY'22 HAWAII AIR NATIONAL GUARD (HIANG) F-22 PLUS-UP
ADD EGRESS SHOP

ROOF FRAMING PLAN

SHEET ID
S-102

REVISED FINAL SUBMITTAL

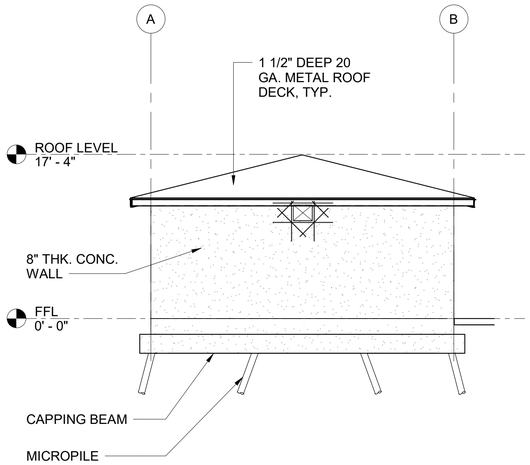

H1 SOUTH ELEVATION AT GRID 1
SCALE: 1/8" = 1'-0"

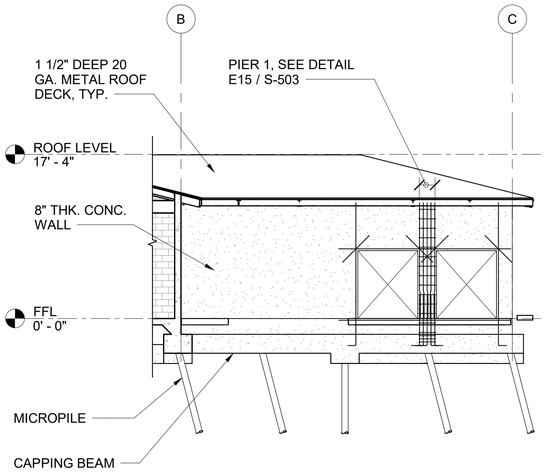

H6 SOUTH ELEVATION AT GRID 2
SCALE: 1/8" = 1'-0"

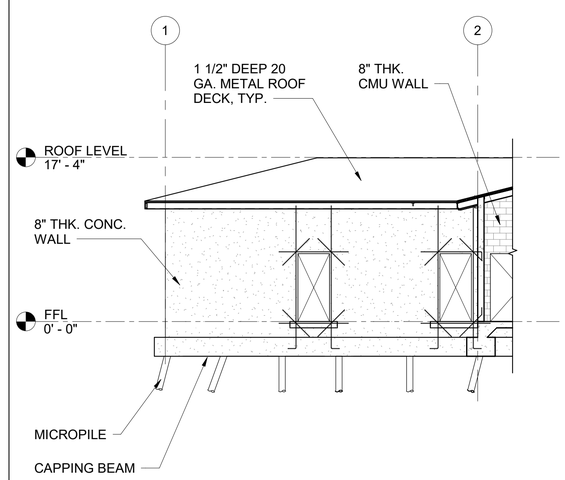

H11 EAST ELEVATION AT GRID B
SCALE: 1/8" = 1'-0"

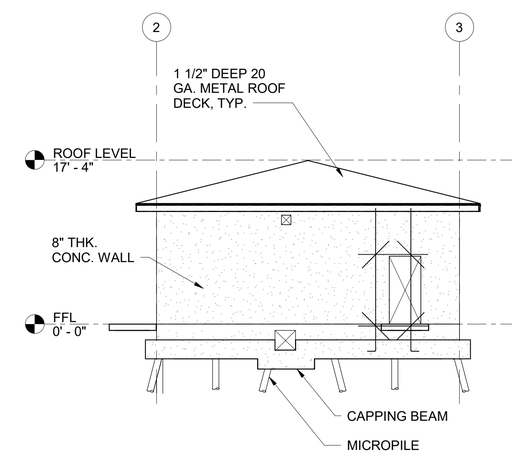

H16 EAST ELEVATION AT GRID C
SCALE: 1/8" = 1'-0"

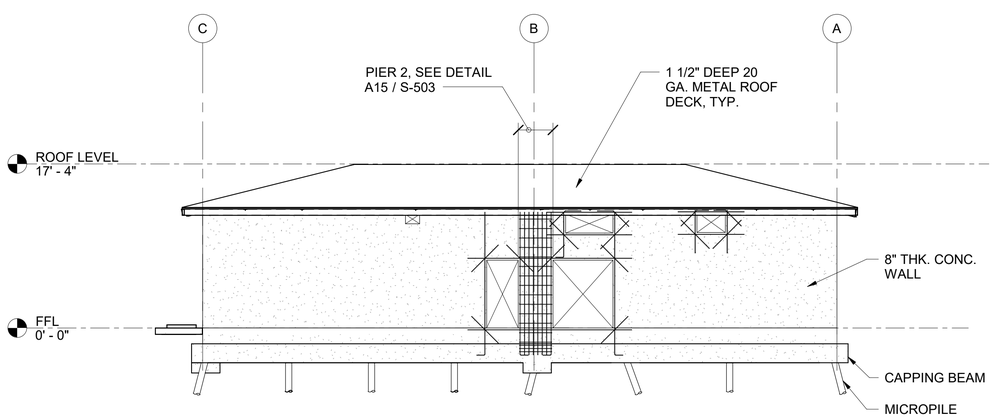

A1 NORTH ELEVATION
SCALE: 1/8" = 1'-0"

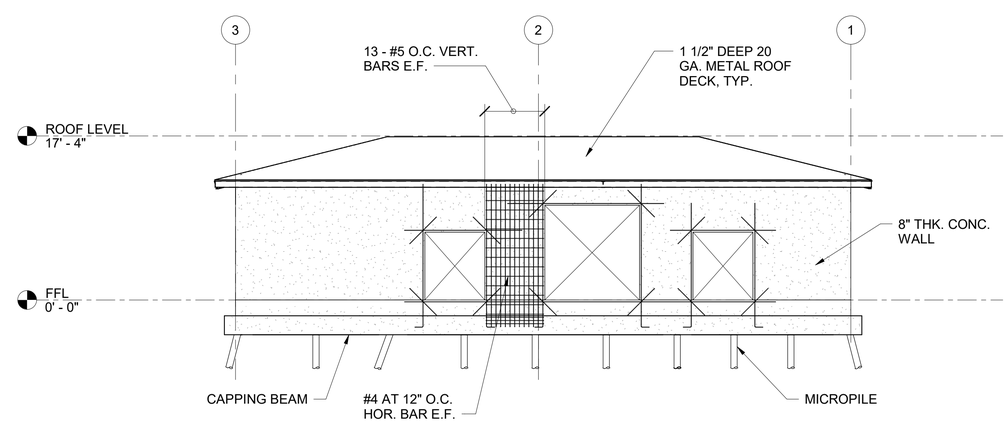

A11 WEST ELAVATION
SCALE: 1/8" = 1'-0"

US Army Corps of Engineers ®

MARK	DESCRIPTION	DATE

ISSUE DATE: 15 OCTOBER 2025
SOLICITATION NO.: W912BA22F0002
CONTRACT NO.: W912BA19B0012

DESIGNED BY: C. HOKIE, CAPUCAO
DRAWN BY: R. TANGONAN
CHECKED BY: B. FUNG
SUBMITTED BY: B. FUNG
SIZE: ANSI D

US ARMY CORPS OF ENGINEERS
HONOLULU DISTRICT
FORT SHAFTER, HAWAII

SSFM INTERNATIONAL, INC.
501 SUMNER STREET, SUITE 620
HONOLULU, HI 96817

JOINT BASE PEARL HARBOR-HICKAM, OAHU, HAWAII
FY22 HAWAII AIR NATIONAL GUARD (HIANG) F-22 PLUS-UP
ADD EGRESS SHOP

BUILDING ELEVATIONS

SHEET ID
S-201

Plot Date: 10/15/2025 4:24:25 PM File Path: M:\2019\2018_ZA4.002 DPL_FRM HIANG F22 Plus-Up\CD Dwgs\Struct\00 Current Revit Model\NMD\200600F_ES_STRUCT_v23.rvt

REVISED FINAL SUBMITTAL

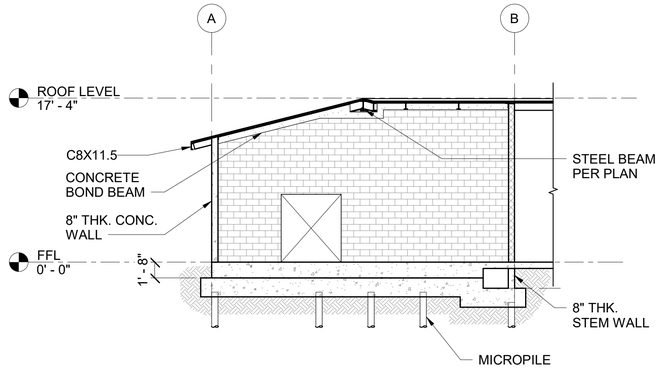

L1 BUILDING SECTION
SCALE: 1/8" = 1'-0"

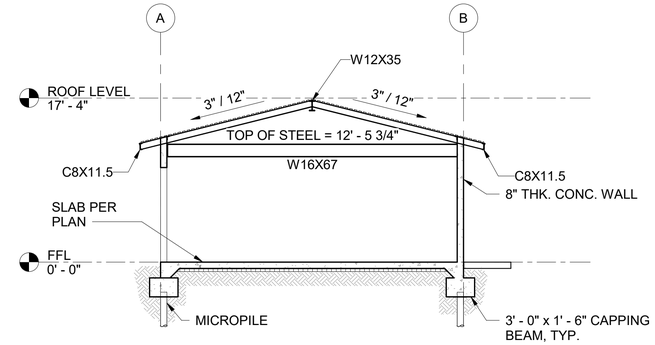

L14 BUILDING SECTION
SCALE: 1/8" = 1'-0"

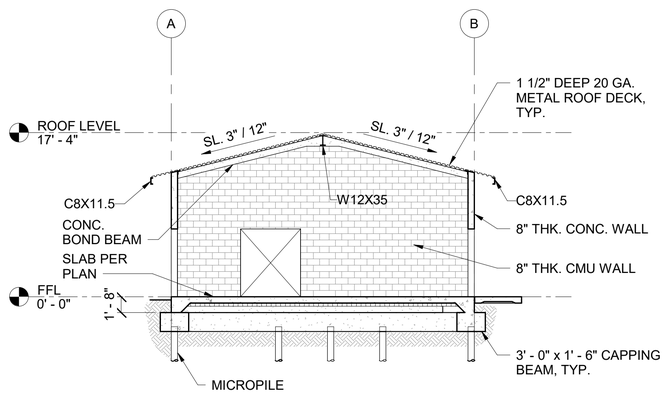

F1 BUILDING SECTION
SCALE: 1/8" = 1'-0"

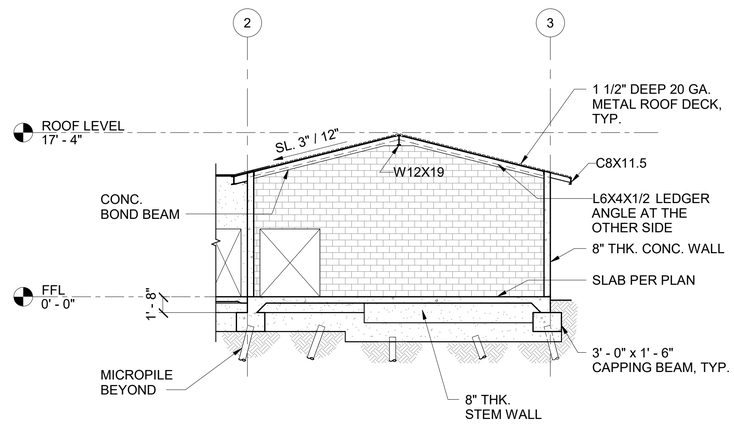

F8 BUILDING SECTION
SCALE: 1/8" = 1'-0"

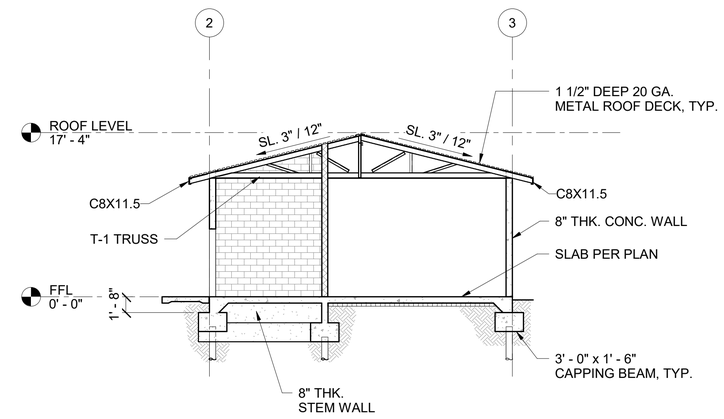

F14 BUILDING SECTION
SCALE: 1/8" = 1'-0"

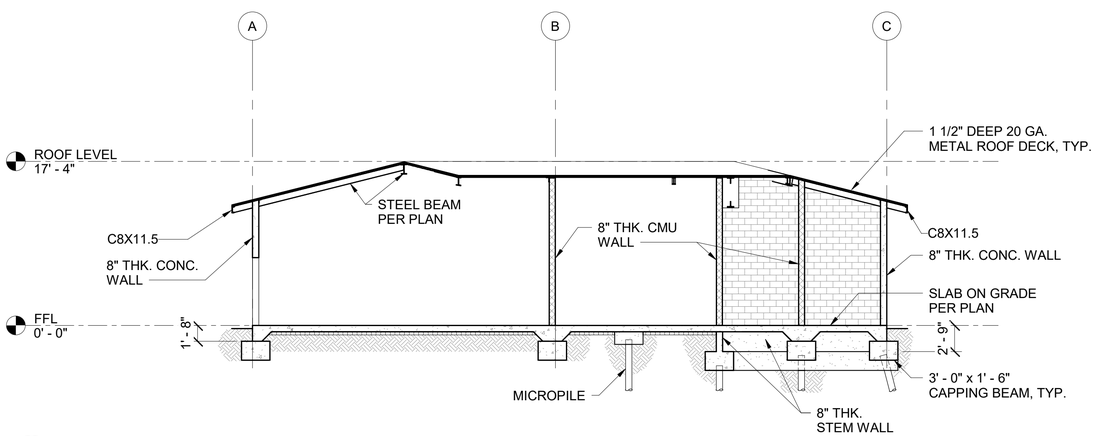

A1 BUILDING SECTION
SCALE: 1/8" = 1'-0"

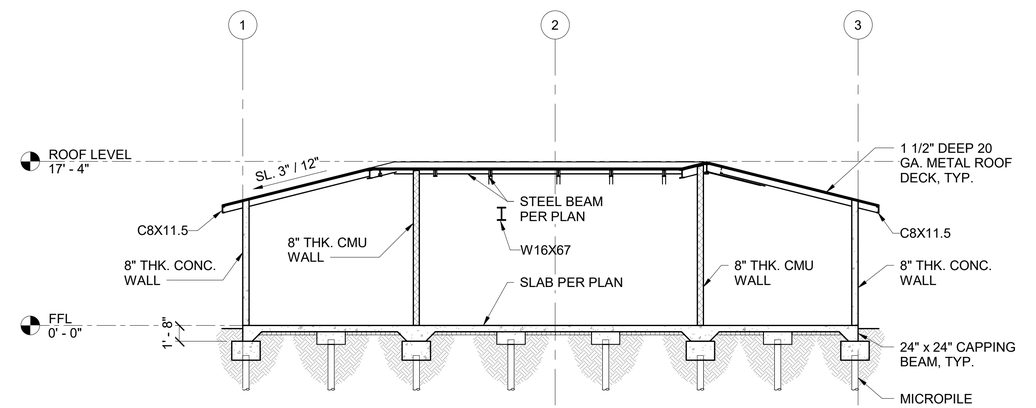

A11 BUILDING SECTION
SCALE: 1/8" = 1'-0"

US Army Corps of Engineers ®

MARK	DESCRIPTION	DATE

ISSUE DATE: 15 OCTOBER 2025
SOLICITATION NO.: W912BA22F0002
CONTRACT NO.: W912BA15B0012

DESIGNED BY: C. HOKIE, CAPUCAO
DRAWN BY: R. TANGONAN
P. FECKED BY: B. FUNG
SUBMITTED BY: B. FUNG
SIZE: ANSI D

US ARMY CORPS OF ENGINEERS
HONOLULU DISTRICT
FORT SHAFTER, HAWAII

SSFM INTERNATIONAL, INC.
501 SUMNER STREET, SUITE 620
HONOLULU, HI 96817

JOINT BASE PEARL HARBOR-HICKAM, OAHU, HAWAII
FY22 HAWAII AIR NATIONAL GUARD (HANG) F-22 PLUS-UP
ADD EGRESS SHOP

BUILDING SECTION

SHEET ID
S-301

File Path: M:\2018\2018_ZA4.002 DPL_PBM HANG F22 Plus-Up\CD Dwgs\Struct\00 Current Revit Model\NAMD\208087_ES_STRUCT_v23.rvt
Plot Date: 10/15/2025 4:24:26 PM

REVISED FINAL SUBMITTAL

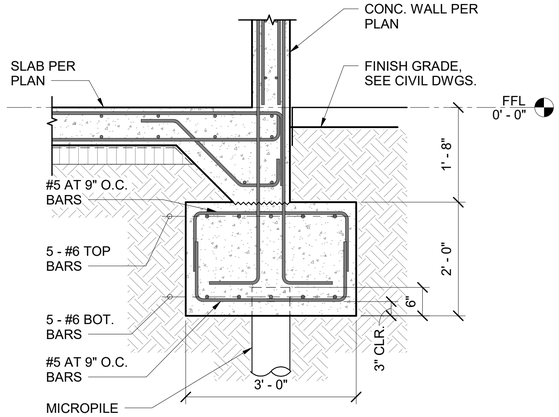

K1 CB-1 EXTERIOR CONDITION DETAILS
SCALE: 3/4" = 1'-0"

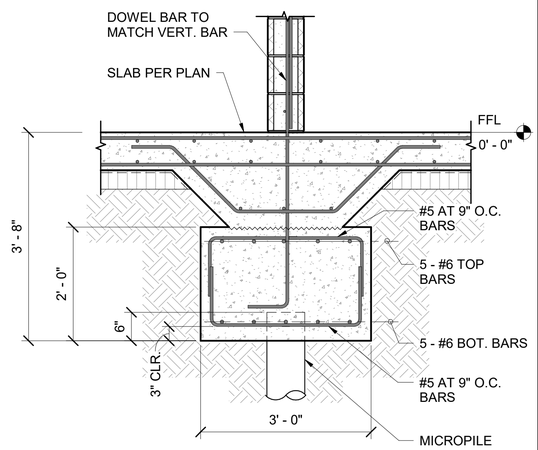

E1 CB-1 INTERIOR CONDITION DETAILS
SCALE: 3/4" = 1'-0"

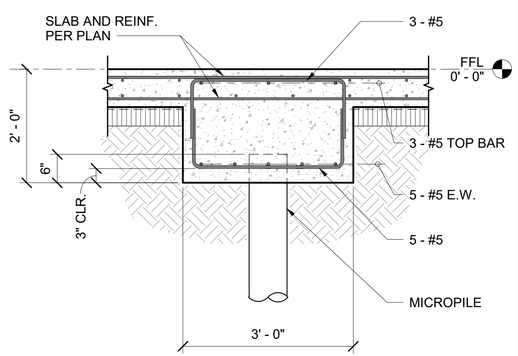

A1 PC-1 DETAILS
SCALE: 3/4" = 1'-0"

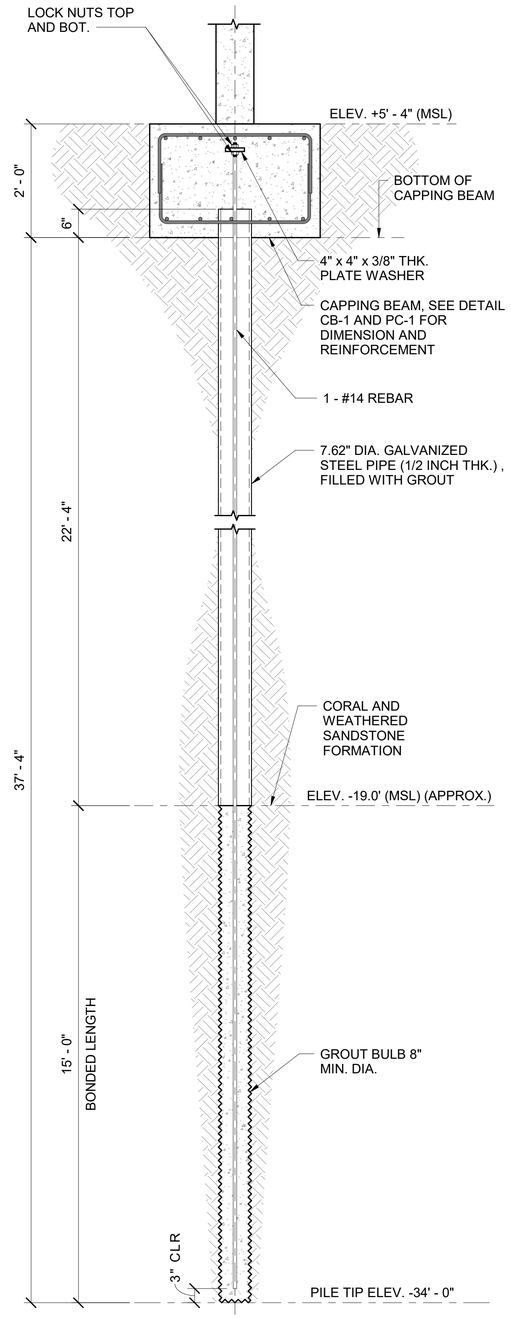

A6 TYPICAL VERTICAL MICROPILE DETAILS
SCALE: NTS

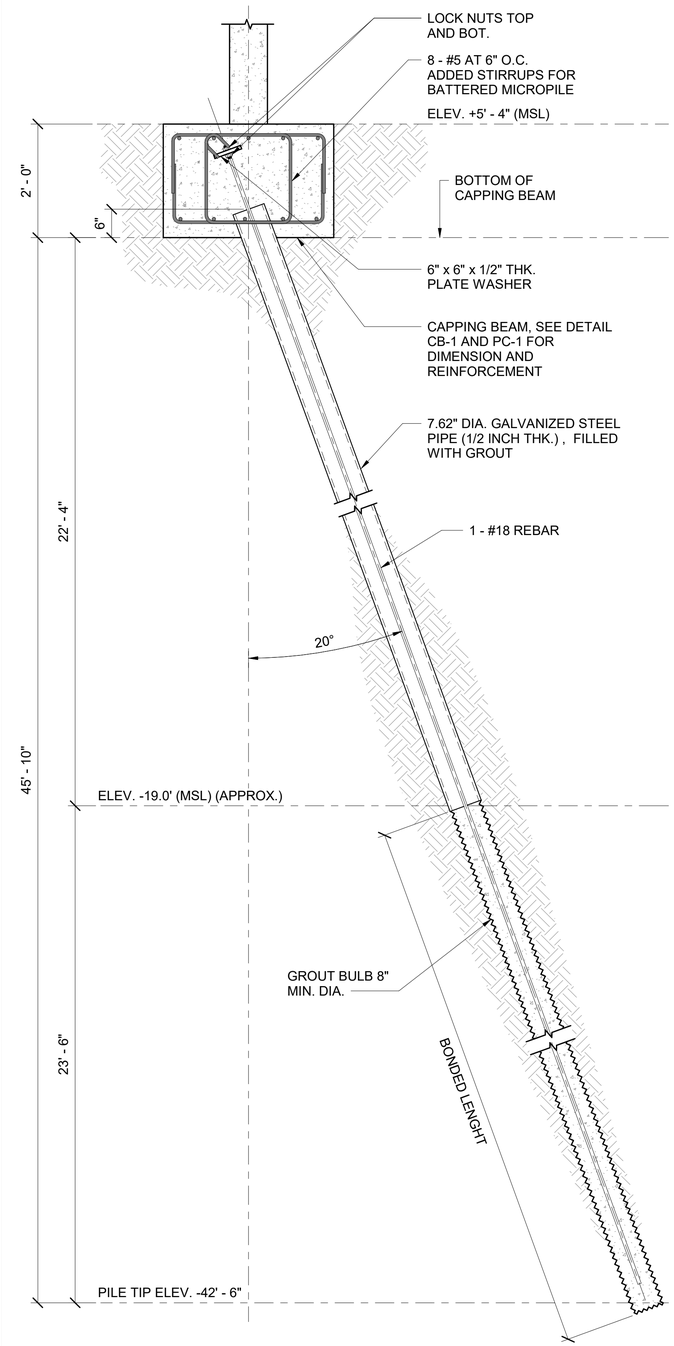

A11 TYPICAL BATTERED MICROPILE DETAILS
SCALE: NTS

MICROPILES FOUNDATIONS

1. MINIMUM ROCK SOCKET LENGTH AS INDICATED ON DRAWINGS, OR AS DEEMED APPROPRIATE PENDING RESULTS OF STATIC PILE LOAD TESTING.
2. MINIMUM FACTOR OF SAFETY FOR SOIL TO PILE BOND SHALL BE 2.0.
3. ALL PILING SHALL BE SPACED ATLEAST 3 TIMES THE DIAMETER OF PILE OR AS INDICATED ON THE DRAWINGS, WHICHEVER IS GREATER.
4. TOTAL SETTLEMENT UNDER THE APPLIED DESIGN LOADING SHALL NOT EXCEED 1/2-INCH UNDER NORMAL LOADING CONDITIONS.
5. THE FINAL LENGTH OF THE PRODUCTION MICROPILES SHALL BE DETERMINED SUCH THAT THE REQUIRED GEOTECHNICAL CAPACITY IS DEVELOPED BY SKIN FRICTION BETWEEN THE GROUT AND SOIL OVER A SUITABLE LENGTH IN AN APPROPRIATE BEARING STRATUM (BOND ZONE).
6. MICROPILE CAPACITIES SHALL BE AS FOLLOWS:
   A. THE DESIGN PILE CAPACITIES FOR THE MICROPILES SHALL BE AS FOLLOWS:

ALLOWABLE MICROPILE CAPACITY	VERTICAL PILES (KIPS)	BATTERED PILES (KIPS)
COMPRESSIVE CAPACITY	60	120
TENSION CAPACITY	80	160

7. MICROPILE LOAD TESTING SHALL BE PER THE SPECIFICATIONS.
8. PRE PRODUCTION PILES SHALL BE INSTALLED 1 EA. AT MUNITION M & I AND EGRESS BUILDING AND SHALL BE SUBJECT TO LOAD TEST.
9. STEEL CASING SHALL BE HOT DIPPED GALVANIZED, MIN. YIELD STRENGTH, Fy = 50-80 KSI.
10. PIPE INFILL GROUT AND GROUT BULB SHALL BE 4000 PSI (28 DAY STRENGTH) NEAT CEMENT.
11. REINFORCING BARS SHALL BE ASTM A615, GRADE 75

US Army Corps of Engineers ®

MARK	DESCRIPTION	DATE

ISSUE DATE: 15 OCTOBER 2025
SOLICITATION NO.: W912BA22F0002
CONTRACT NO.: W912BA19B0012

DESIGNED BY: C. HOKE, CAPUCAO
DRAWN BY: R. TANGONAN
CHECKED BY: B. FUNG
SUBMITTED BY: B. FUNG
SIZE: ANSI D

US ARMY CORPS OF ENGINEERS
HONOLULU DISTRICT
FORT SHAFTER, HAWAII

SSFM INTERNATIONAL, INC.
501 SUMMER STREET, SUITE 620
HONOLULU, HI 96817

JOINT BASE PEARL HARBOR-HICKAM, OAHU, HAWAII
FY'22 HAWAII AIR NATIONAL GUARD (HANG) F-22 PLUS-UP
ADD EGRESS SHOP

TYPICAL MICROPILE DETAILS

SHEET ID
S-501

File Path: M:\2018\2018_224.002 DPL_FRM HANG F-22 Plus-Up\CD Dwgs\Struct\00 Current Revit Model\NAMD\208087_EB_STRUCT_v23.rvt
Plot Date: 10/15/2025 4:24:27 PM

REVISED FINAL SUBMITTAL

TYPICAL MASONRY WALL REINFORCING SCHEDULE

WALL THICKNESS	HORIZ BOND BEAM	VERT	REMARKS
8"	#4 AT 24"	#5 AT 24"	

TYPICAL CMU WALL REINFORCEMENT NOTES:

1. SEE TYPICAL MASONRY WALL REINFORCING SCHEDULE FOR WALL REINFORCEMENT. THE TYPICAL MASONRY WALL REINFORCING SCHEDULE SHALL GOVERN FOR ALL WALLS WHERE REINFORCEMENT IS NOT SHOWN IN PLANS, SECTIONS, AND ELEVATIONS.
2. STAGGER SPLICES IN HORIZONTAL WALL REINFORCEMENT.
3. SEE TYPICAL WALL OPENING DETAIL FOR ADDED BARS AROUND OPENINGS.
4. PROVIDE DOWELS TO MATCH ALL WALL REINFORCING FROM ABUTTING MEMBERS. DOWELS SHALL LAP A MINIMUM 48 BAR DIAMETERS WITH WALL REINFORCEMENT AND SHALL BE EMBEDDED IN ABUTTING MEMBER A MINIMUM OF 48 BAR DIAMETERS UNLESS OTHERWISE SHOWN. WHERE THERE IS INSUFFICIENT DEPTH TO OBTAIN PROPER EMBEDMENT, EXTEND DOWEL TO THE FAR FACE OF MEMBER AND HOOK UNLESS OTHERWISE DIRECTED BY THE CONTRACTING OFFICER.

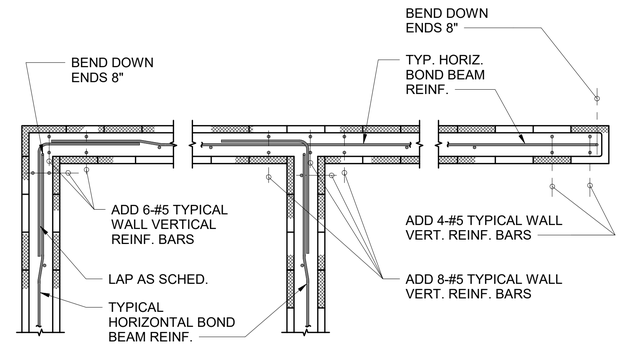

CONDITION AT CORNER CONDITION AT INTERSECTION CONDITION AT END

K1 TYPICAL CMU WALL DETAIL
SCALE: NTS

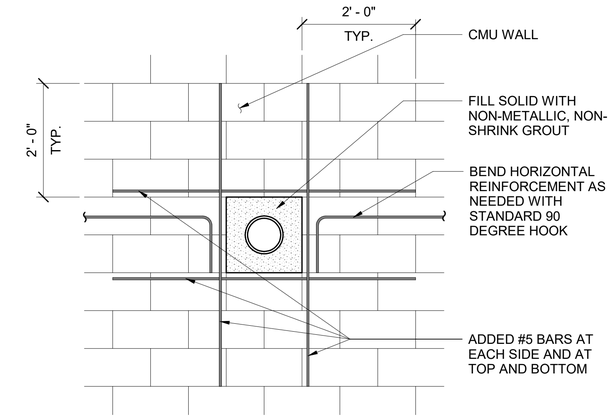

ELEVATION

A1 PIPE PENETRATION IN CMUW WALL DETAIL
SCALE: NTS

LINTEL BEAM REINFORCING SCHEDULE

OPENING WIDTH	MINIMUM LINTEL DEPTH	REINF.	STIRRUP
UP TO 48"	16"	2-#4	#3 AT 8" O.C.
UP TO 96"	24"	2-#5	#3 AT 8" O.C.
UP TO 144"	32"	2-#5	#4 AT 8" O.C.
NOTE: ALTERNATE POSITION OF STIRRUP HOOKS			

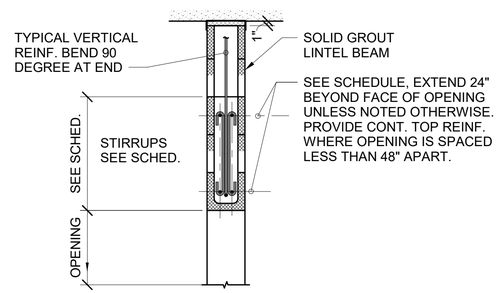

SECTION

A9 LINTEL BEAM SCHEDULE AND DETAIL
SCALE: NTS

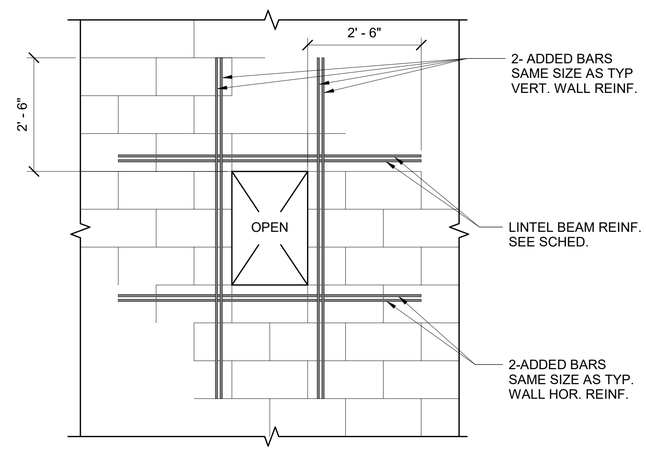

ELEVATION

H9 CMU WALL OPENING ADDED REINFORCEMENT
SCALE: NTS

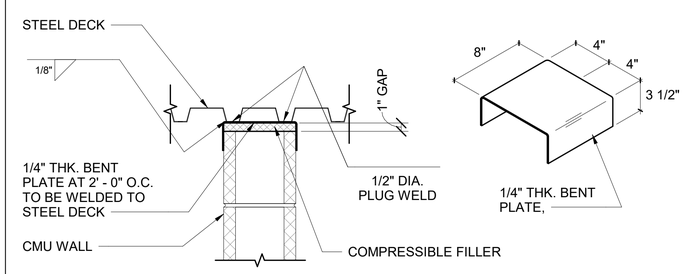

A16 CMU WALL BRACE DETAIL
SCALE: NTS

US Army Corps of Engineers ®

MARK	DESCRIPTION	DATE

DESIGNED BY: C. HOKIE, CAPUCAO	ISSUE DATE: 15 OCTOBER 2025
DRAWN BY: R. TANGONAN	SOLICITATION NO.: W912BA22F0002
CHECKED BY: B. FUNG	CONTRACT NO.: W912BA15B0012
SUBMITTED BY: B. FUNG	
SIZE: ANSI D	

US ARMY CORPS OF ENGINEERS
HONOLULU DISTRICT
FORT SHAFTER, HAWAII

SSFM INTERNATIONAL, INC.
501 SUMNER STREET, SUITE 620
HONOLULU, HI 96817

JOINT BASE PEARL HARBOR-HICKAM, OAHU, HAWAII
FY22 HAWAII AIR NATIONAL GUARD (HIANG) F-22 PLUS-UP
ADD EGRESS SHOP

TYPICAL CMU WALL DETAILS

SHEET ID
S-502

Plot Date: 10/15/2025 4:24:27 PM File Path: M:\2018\2018_224.002 DPL_FRM HIANG F-22 Plus-Up\C Dwgs\Struct\00 Current Revit Model\NMD\208087_ES_STRUCT_v23.rvt

REVISED FINAL SUBMITTAL

TYPICAL WALL REINFORCEMENT NOTES

1. MINIMUM WALL REINFORCEMENT SHALL BE #4 BARS AT 12" O.C. E.F. VERT. AND HORIZ. AND SHALL GOVERN FOR ALL WALLS WHERE REINFORCEMENT IS NOT SHOWN ON PLANS, SECTIONS, ELEVATIONS, ETC.
2. WHERE WALL IS DISCONTINUOUS, EXTEND ALL WALL REINFORCING TO WITHIN 2" OF TOP OR END OF WALL OR SLAB AND PROVIDE U-BAR.
3. STAGGER SPLICES IN HORIZONTAL WALL REINFORCEMENT.
4. SEE TYPICAL WALL OPENING DETAIL FOR ADDED BARS AROUND OPENINGS.

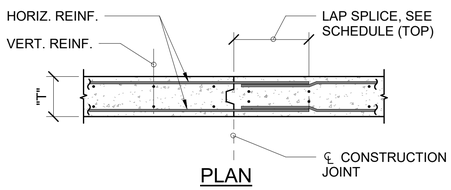

PLAN

NOTES:
1. MECHANICALLY ROUGHEN CONSTRUCTION JOINT OR USE 1" DEEP x "T"/3 WIDE KEYS.

J1 TYPICAL CONCRETE WALL CONSTRUCTION JOINT DETAIL
SCALE: NTS

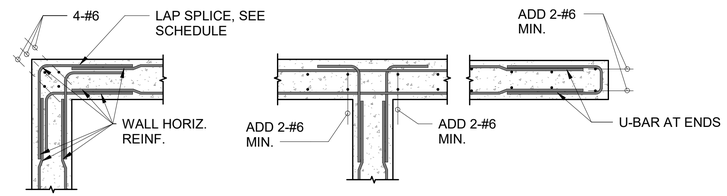

PLAN AT CORNER PLAN AT INTERSECTION PLAN AT END

J6 TYPICAL WALL CORNER/ INTERSECTION/ END DETAILS
SCALE: NTS

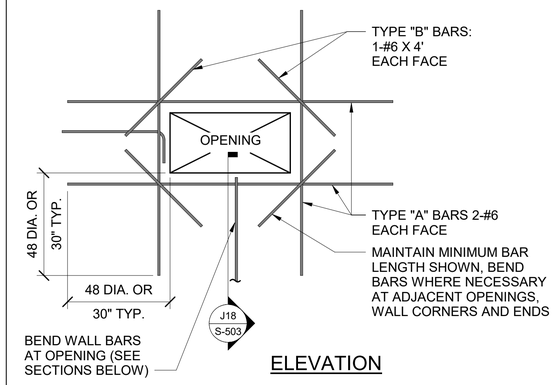

ELEVATION

J13 TYPICAL WALL OPENING REINFORCING DETAILS
SCALE: NTS

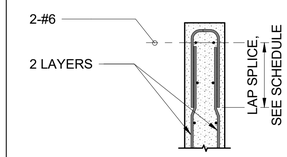

SECTION

NOTES:
1. WHERE SIDES, TOP OR BOTTOM OF OPENINGS ARE IN LINE, "A" BARS SHALL BE CONTINUOUS EXCEPT WHERE OPENINGS ARE MORE THAN 8' - 4" APART.
2. OMIT TYPE "B" BARS FOR OPENING EQUAL TO OR LESS THAN 1'-0" BY 1'-0".

J18 SECTION
SCALE: NTS

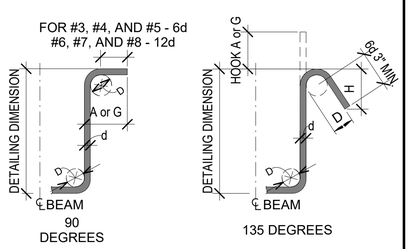

STIRRUP HOOKS/TIE

BAR SIZE	D (in)	90 HOOKS	135 HOOKS		
		A or G	D (in)	A or G	H
#3	2"	4"	2"	4 1/2"	3"
#4	2 1/2"	4 3/4"	2 1/2"	5"	3"
#5	3 1/4"	6"	3 1/4"	6"	3 3/4"
#6	4 1/2"	1' - 0"	4 1/2"	8"	4 1/2"
#7	5 1/4"	1' - 2"	5 1/4"	9"	5 1/4"
#8	6"	1' - 4"	6"	10 1/2"	6"

B1 STANDARD STIRRUP/TIE HOOKS
SCALE: NTS

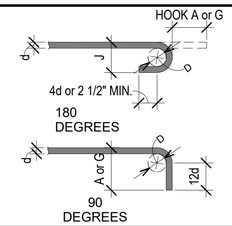

STANDARD END HOOKS

BAR SIZE	D (in)	180 HOOKS	
		A or G	J
#3	2 1/2"	5"	3"
#4	3"	8"	4"
#5	3 3/4"	10"	5"
#6	4 1/2"	1' - 0"	6"
#7	5 1/4"	1' - 2"	7"
#8	6"	1' - 4"	8"

B6 STANDARD END HOOKS
SCALE: NTS

MINIMUM LAP SPLICE LENGTH

	f'c = 3,000 PSI		f'c = 4,000 PSI		f'c = 5,000 PSI	
BAR SIZE	TOP BARS	OTHER BARS	TOP BARS	OTHER BARS	TOP BARS	OTHER BARS
#3	29"	22"	25"	20"	22"	17"
#4	38"	29"	33"	25"	29"	22"
#5	47"	37"	41"	32"	36"	28"
#6	56"	43"	49"	38"	43"	34"
#7	82"	63"	71"	55"	63"	49"
#8	94"	72"	81"	63"	72"	55"

NOTES

1. TOP BARS ARE HORIZONTAL REINFORCING BARS WITH MORE THAN 12" OF CONCRETE CAST BELOW THEM.
2. IF CLEAR COVER TO REINFORCING BARS IS LESS THAN 1x THE BAR DIAMETER OR THE CENTER-TO-CENTER SPACING IS LESS THAN 3x BAR DIAMETERS, THEN MINIMUM LAP SPLICE LENGTH SHALL BE INCREASED BY 43%.

B11 LAP SPLICE SCHEDULE
SCALE: NTS

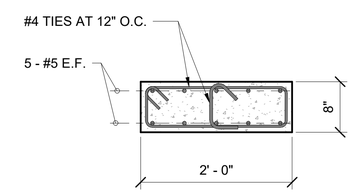

E15 PIER 1 DETAIL
SCALE: 1" = 1'-0"

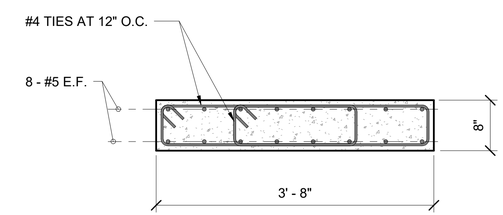

A15 PIER 2 DETAIL
SCALE: 1" = 1'-0"

US Army Corps of Engineers ®

MARK	DESCRIPTION	DATE

File Path: M:\2018\2018_Z24.002 DPL_PBM HANG F22 Pre-Up\C Dwgs\Struct\00 Current Revit Model\NMD\S00607_ES_STRUCT_v23.rvt
Plot Date: 10/15/2025 4:24:28 PM

DESIGNED BY: C. HOKE, CAPUCAO
DRAWN BY: R. TANGONAN
CHECKED BY: B. FUNG
SUBMITTED BY: B. FUNG
SIZE: ANSI D
ISSUE DATE: 15 OCTOBER 2025
SOLICITATION NO.: W912BA22F0002
CONTRACT NO.: W912BA19B0012

US ARMY CORPS OF ENGINEERS
HONOLULU DISTRICT
FORT SHAFTER, HAWAII

SSFM INTERNATIONAL, INC.
501 SUMNER STREET, SUITE 620
HONOLULU, HI 96817

JOINT BASE PEARL HARBOR-HICKAM, OAHU, HAWAII
FY22 HAWAII AIR NATIONAL GUARD (HIANG) F-22 PLUS-UP
ADD EGRESS SHOP

TYPICAL CONCRETE WALL DETAILS

SHEET ID
S-503

REVISED FINAL SUBMITTAL

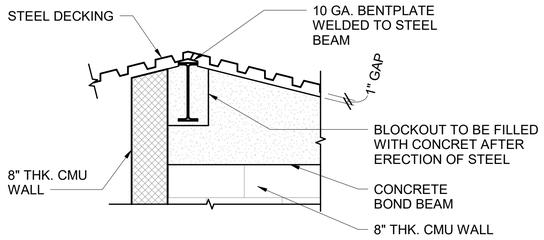

M1 SECTION
SCALE: 3/4" = 1'-0"

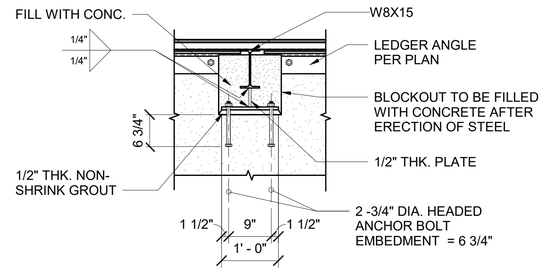

M7 TYPICAL RAFTER TO WALL CONNECTION DETAIL
SCALE: 3/4" = 1'-0"

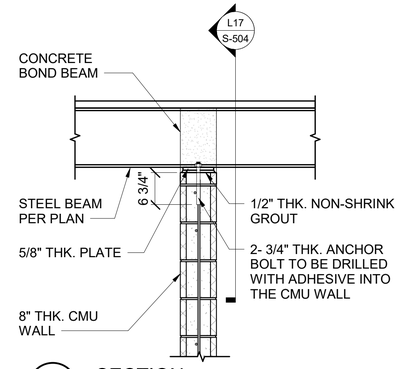

L13 SECTION
SCALE: 3/4" = 1'-0"

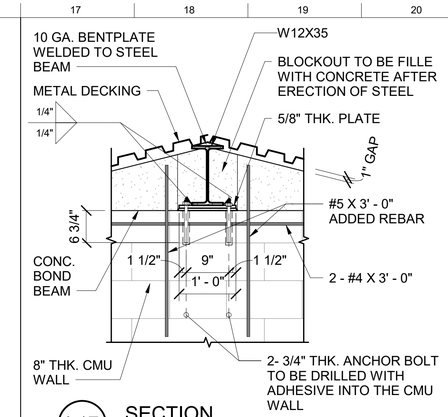

L17 SECTION
SCALE: 3/4" = 1'-0"

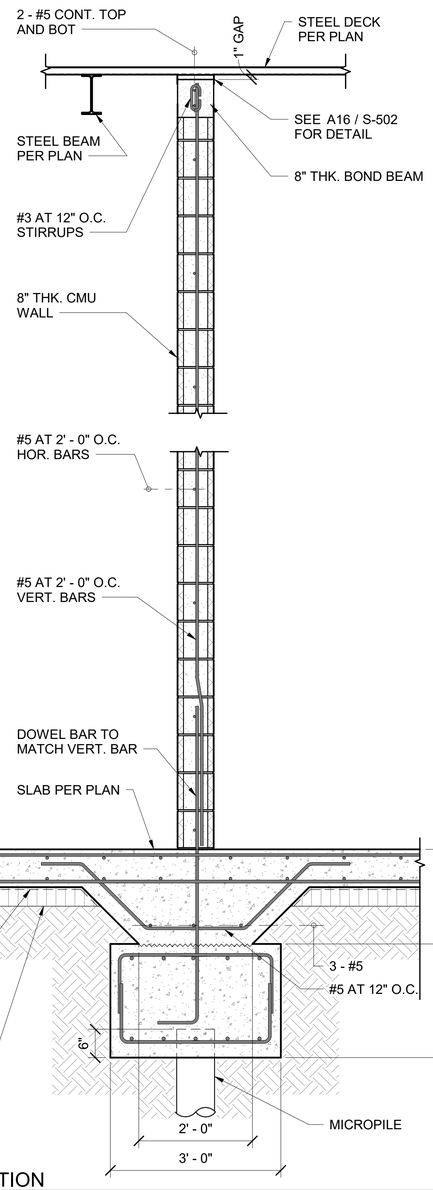

A1 SECTION
SCALE: 3/4" = 1'-0"

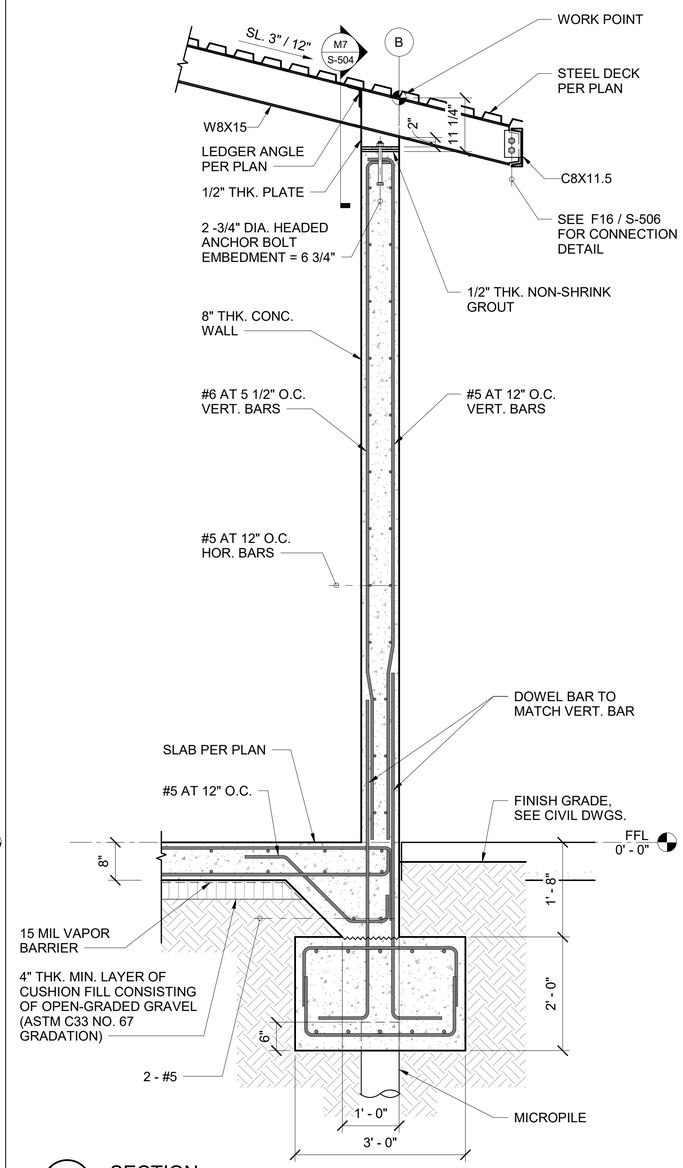

A7 SECTION
SCALE: 3/4" = 1'-0"

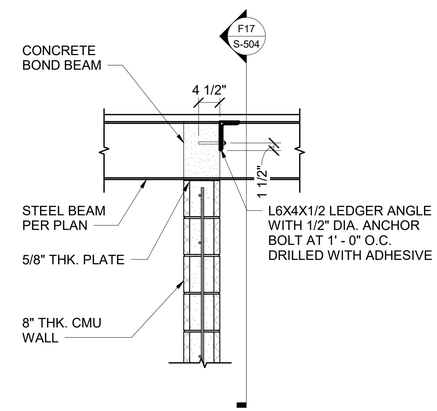

F13 SECTION
SCALE: 3/4" = 1'-0"

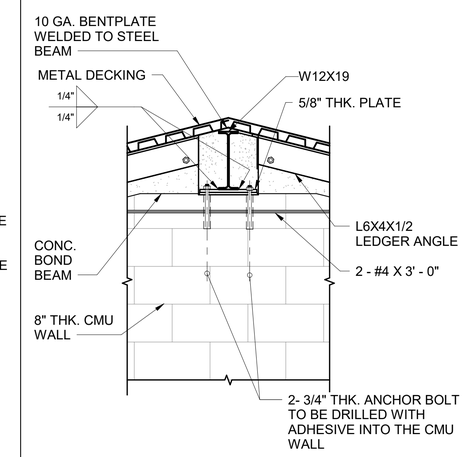

F17 SECTION
SCALE: 3/4" = 1'-0"

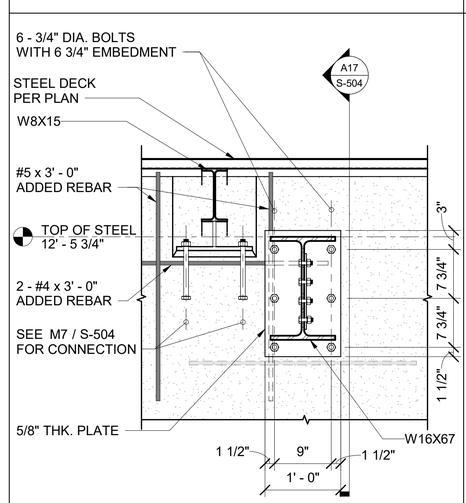

A13 DETAIL
SCALE: 1" = 1'-0"

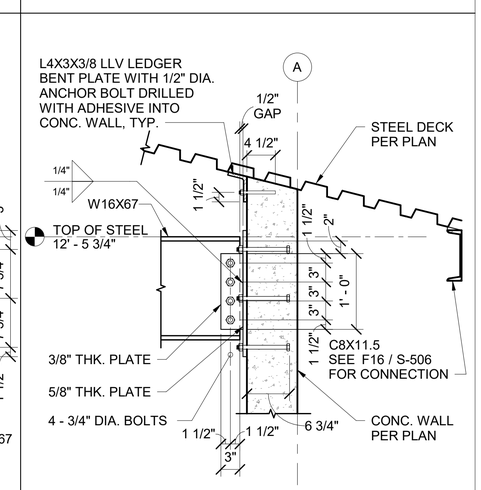

A17 DETAIL
SCALE: 1" = 1'-0"

US Army Corps of Engineers ®

MARK	DESCRIPTION	DATE

ISSUE DATE: 15 OCTOBER 2025
SOLICITATION NO.: W912BA22F0002
CONTRACT NO.: W912BA15B0012

DESIGNED BY: C. HOKIE, CAPUCAO
DRAWN BY: R. TANGONAN
CHECKED BY: B. FUNG
SUBMITTED BY: B. FUNG
SIZE: ANSI D

US ARMY CORPS OF ENGINEERS
HONOLULU DISTRICT
FORT SHAFTER, HAWAII

SSFM INTERNATIONAL, INC.
501 SUMNER STREET, SUITE 620
HONOLULU, HI 96817

JOINT BASE PEARL HARBOR-HICKAM, OAHU, HAWAII
FY22 HAWAII AIR NATIONAL GUARD (HIANG) F-22 PLUS-UP
ADD EGRESS SHOP

SECTIONS AND DETAILS

SHEET ID
S-504

File Path: M:\2018\2018_Z24.002 DPL_PBM HIANG F22 Plus-Up\CD Dwgs\Struct\00 Current Revit Model\NMD\208087_ES_STRUCT_v23.rvt

Plot Date: 10/15/2025 4:24:29 PM

REVISED FINAL SUBMITTAL

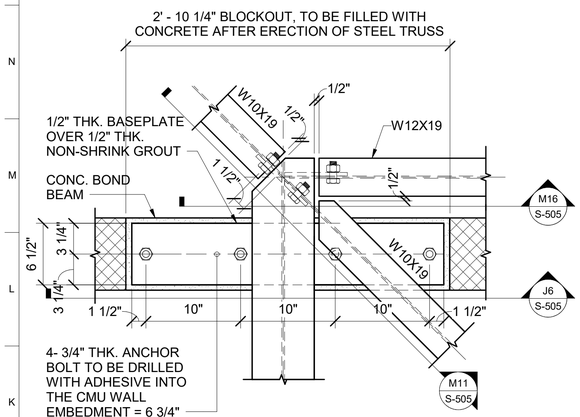

J1 DETAIL
SCALE: 1 1/2" = 1'-0"

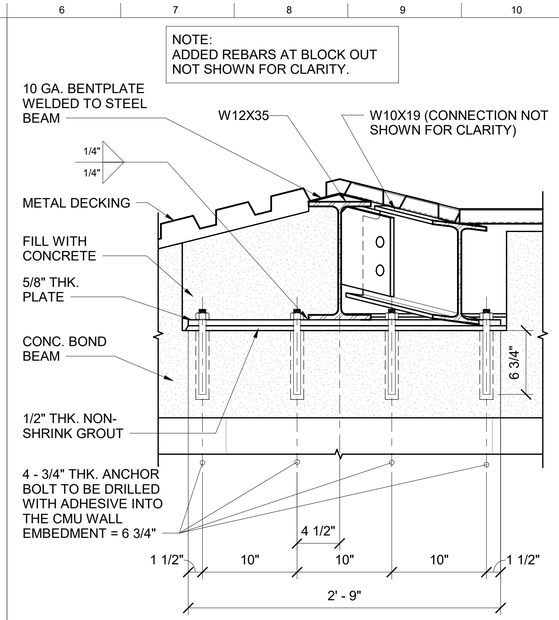

J6 SECTION
SCALE: 1 1/2" = 1'-0"

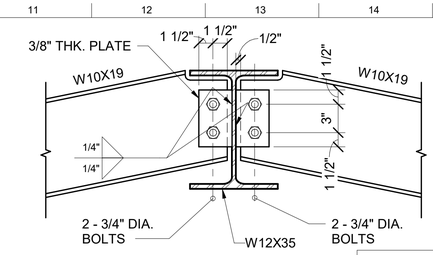

M11 SECTION
SCALE: 1 1/2" = 1'-0"

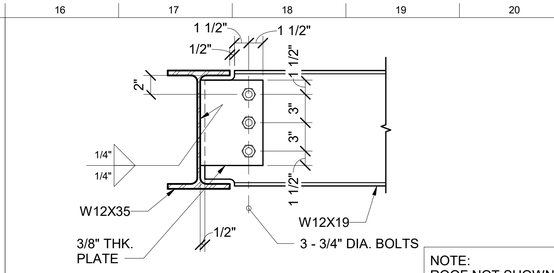

M16 SECTION
SCALE: 1 1/2" = 1'-0"

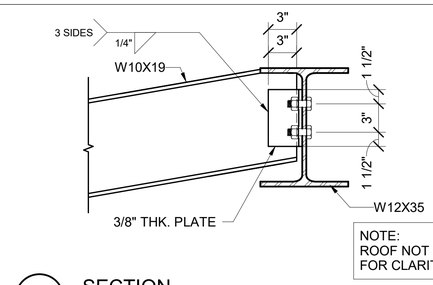

J11 SECTION
SCALE: 1 1/2" = 1'-0"

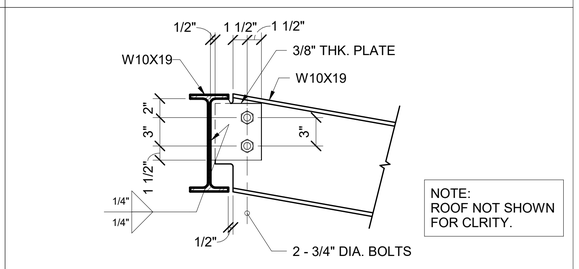

J16 SECTION
SCALE: 1 1/2" = 1'-0"

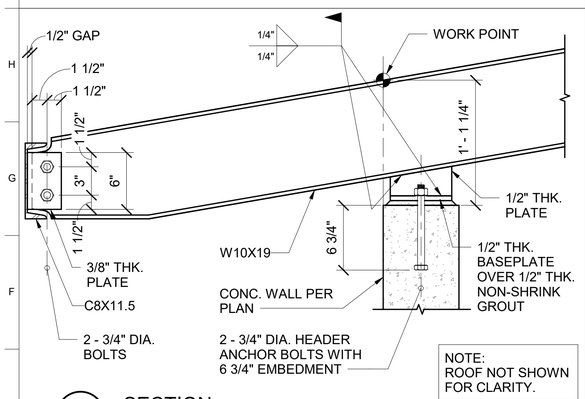

E1 SECTION
SCALE: 1 1/2" = 1'-0"

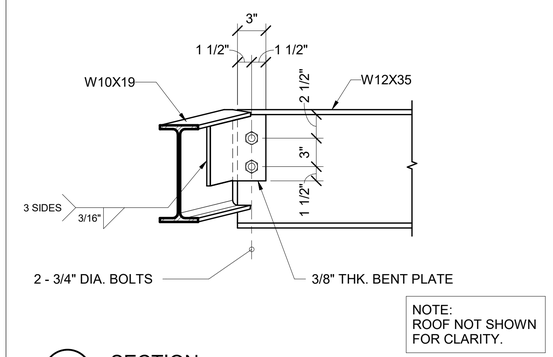

E6 SECTION
SCALE: 1 1/2" = 1'-0"

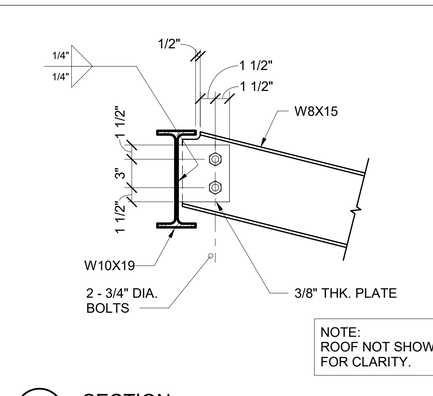

E11 SECTION
SCALE: 1 1/2" = 1'-0"

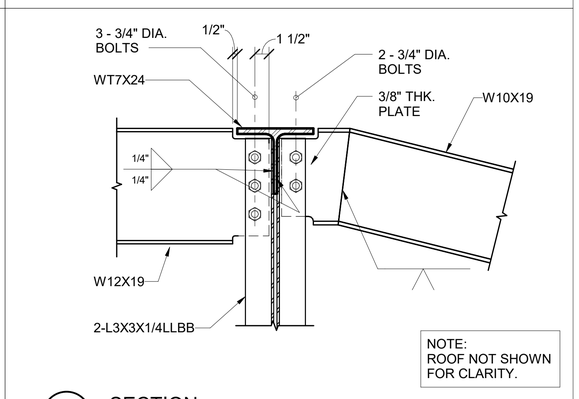

E16 SECTION
SCALE: 1 1/2" = 1'-0"

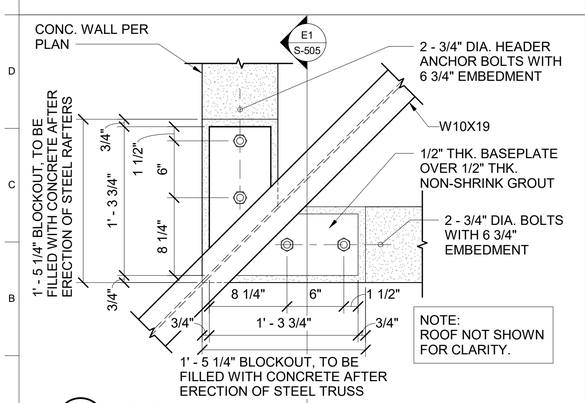

A1 DETAIL
SCALE: 1 1/2" = 1'-0"

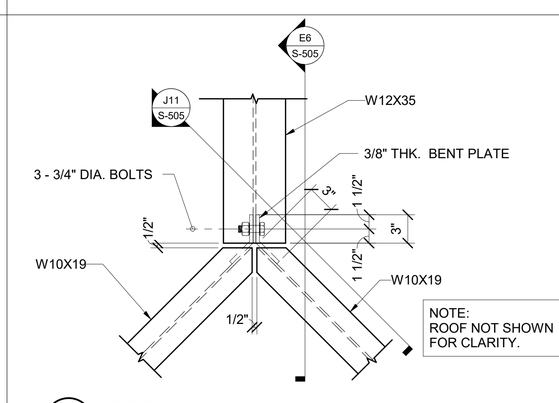

A6 DETAIL
SCALE: 1 1/2" = 1'-0"

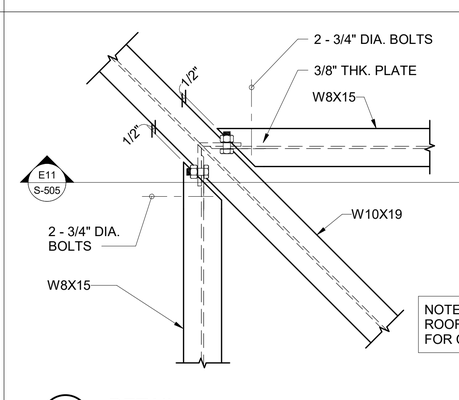

A11 DETAIL
SCALE: 1 1/2" = 1'-0"

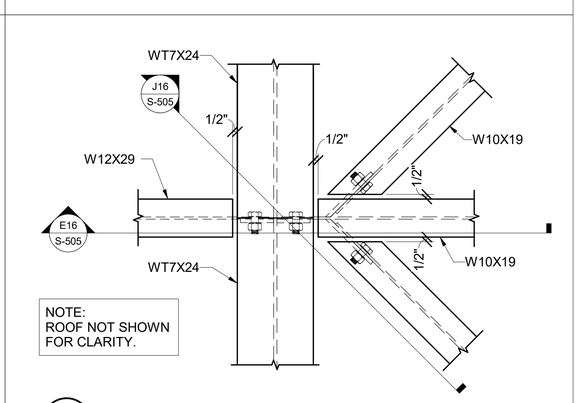

A16 DETAIL
SCALE: 1 1/2" = 1'-0"

US Army Corps of Engineers ®

MARK	DESCRIPTION	DATE

ISSUE DATE: 15 OCTOBER 2025
SOLICITATION NO.: W912BA22F0002
CONTRACT NO.: W912BA15B0072

DESIGNED BY: C. HOKIE, CAPUCAO
DRAWN BY: R. TANGONAN
CHECKED BY: B. FUNG
SUBMITTED BY: B. FUNG
SIZE: ANSI D

US ARMY CORPS OF ENGINEERS
HONOLULU DISTRICT
FORT SHAFTER, HAWAII

SSFM INTERNATIONAL, INC.
501 SUMNER STREET, SUITE 620
HONOLULU, HI 96817

JOINT BASE PEARL HARBOR-HICKAM, OAHU, HAWAII
FY22 HAWAII AIR NATIONAL GUARD (HIANG) F-22 PLUS-UP
ADD EGRESS SHOP

SECTIONS AND DETAILS

SHEET ID
S-505

File Path: M:\2018\2018_Z24.002 DPL_FRM HIANG F-22 Plus-Up\CD Dwgs\Struct\00 Current Revit Model\NMD\208087_ES_STRUCT_v23.rvt

Plot Date: 10/15/2025 4:24:31 PM

REVISED FINAL SUBMITTAL

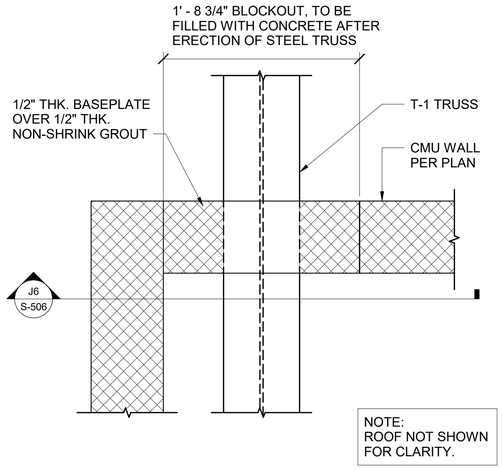

J1 DETAIL
SCALE: 1 1/2" = 1'-0"

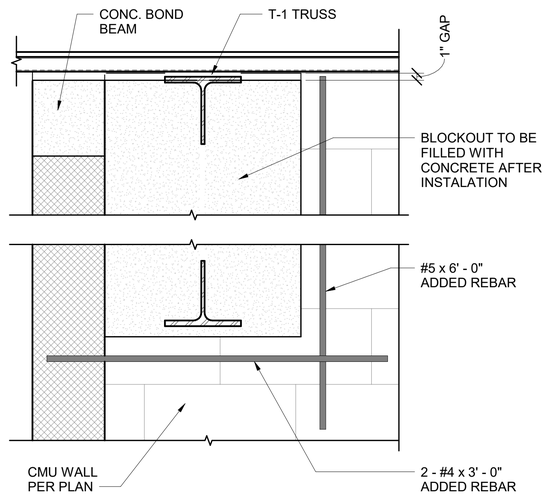

J6 SECTION
SCALE: 1 1/2" = 1'-0"

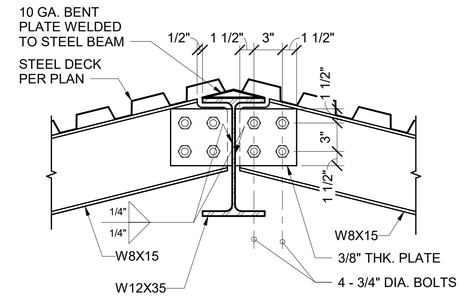

J11 SECTION
SCALE: 1 1/2" = 1'-0"

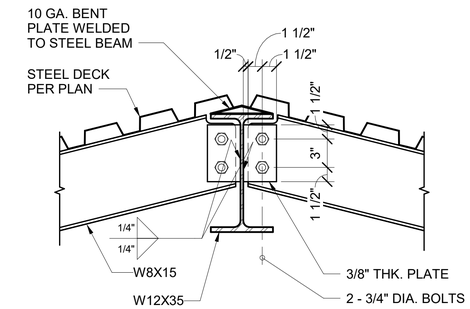

J16 TYPICAL RAFTER TO RIDGE BEAM CONNECTION DETAIL
SCALE: 1 1/2" = 1'-0"

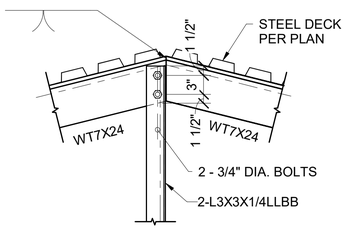

F1 DETAIL
SCALE: 1" = 1'-0"

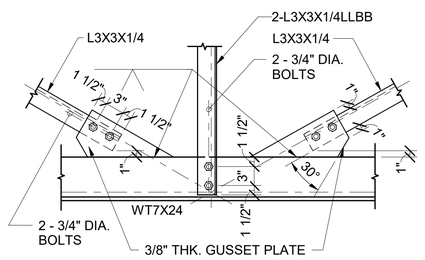

F6 DETAIL
SCALE: 1" = 1'-0"

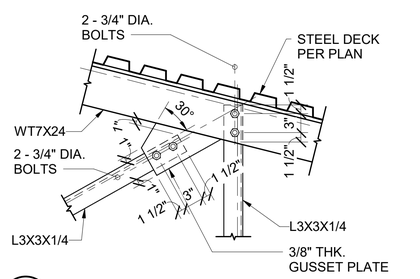

F11 DETAIL
SCALE: 1" = 1'-0"

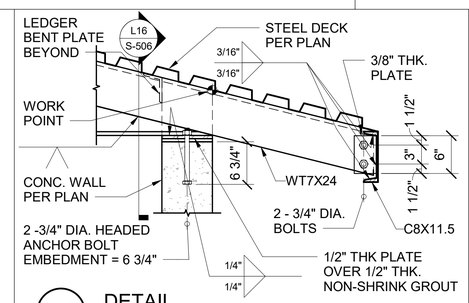

F16 DETAIL
SCALE: 1" = 1'-0"

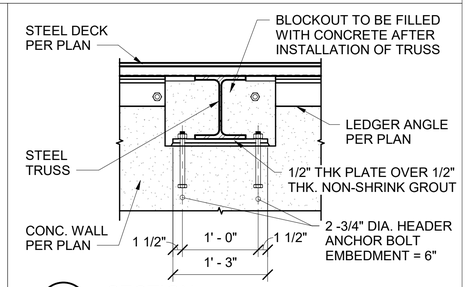

L16 SECTION
SCALE: 1" = 1'-0"

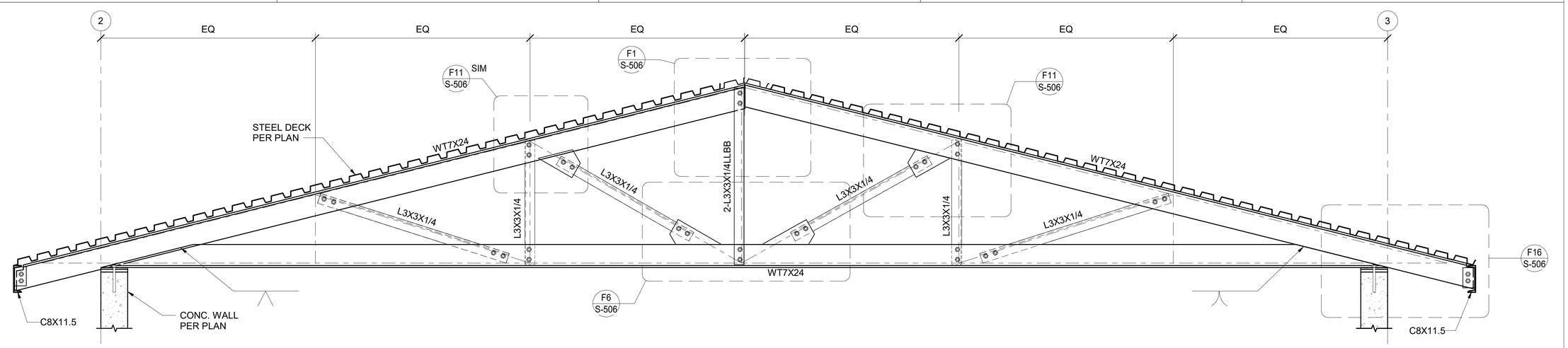

A1 T-1 TRUSS DETAILS
SCALE: 3/4" = 1'-0"

US Army Corps of Engineers ®

MARK	DESCRIPTION	DATE

ISSUE DATE: 15 OCTOBER 2025
SOLICITATION NO.: W912BA22F0002
CONTRACT NO.: W912BA15B0012

DESIGNED BY: C. HOKE, CAPUCAO
DRAWN BY: R. TANGONAN
CHECKED BY: C. FUNG
SUBMITTED BY: B. FUNG
SIZE: ANSI D

Plot Date: 10/15/2025 4:24:33 PM
File Path: M:\2018\2018_Z24 002 DPL_FKM HANG F-22 Plus-Up\CD Dwgs\Struct\00 Current Revit Model\NMD\S00607_E9_STRUCT_v23.rvt

US ARMY CORPS OF ENGINEERS
HONOLULU DISTRICT
FORT SHAFTER, HAWAII

SSFM INTERNATIONAL, INC.
501 SUMMER STREET, SUITE 620
HONOLULU, HI 96817

JOINT BASE PEARL HARBOR-HICKAM, OAHU, HAWAII
FY22 HAWAII AIR NATIONAL GUARD (HANG) F-22 PLUS-UP
ADD EGRESS SHOP

SECTIONS AND DETAILS

SHEET ID
S-506

REVISED FINAL SUBMITTAL

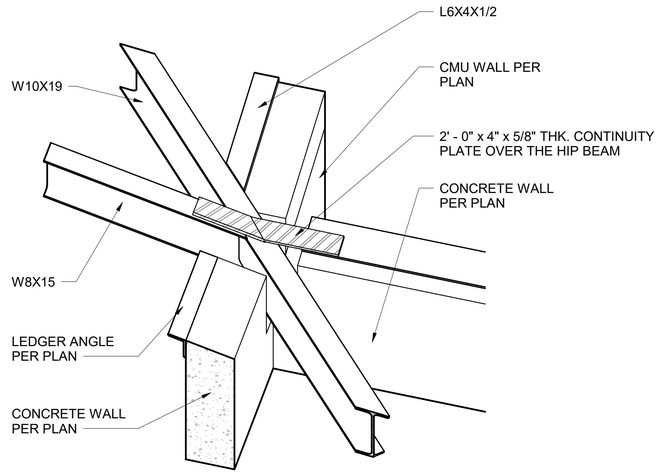

J1 3D VIEW DETAIL
SCALE:

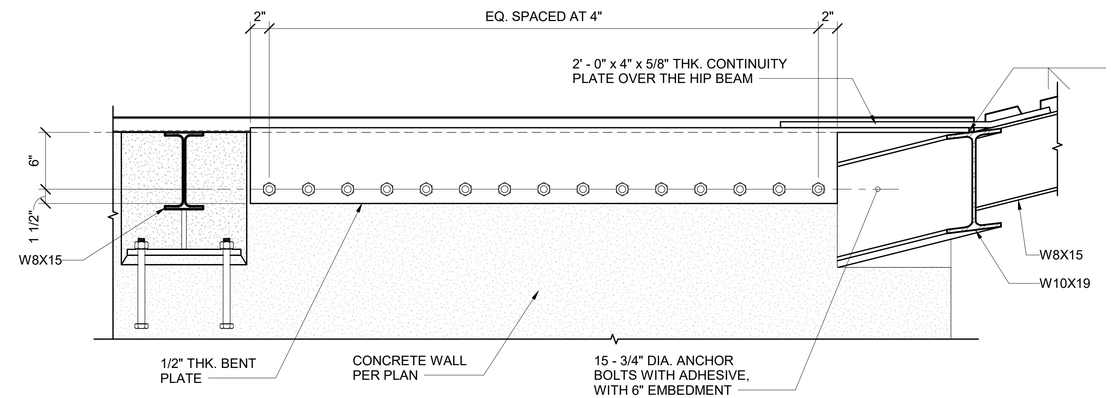

J11 SECTION
SCALE: 1 1/2" = 1'-0"
0 0.25' 0.5' 1' 1.5'

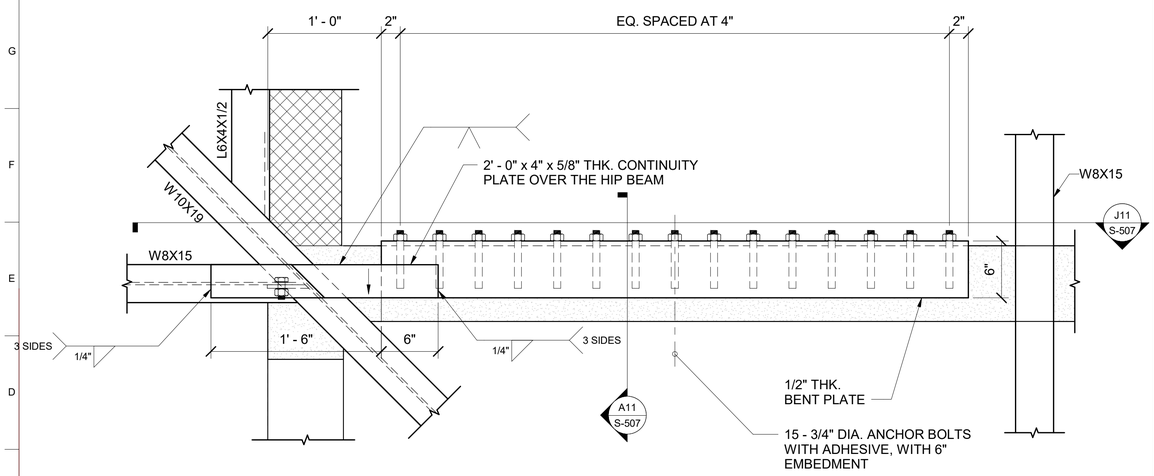

A1 DETAIL
SCALE: 1 1/2" = 1'-0"
0 0.25' 0.5' 1' 1.5'

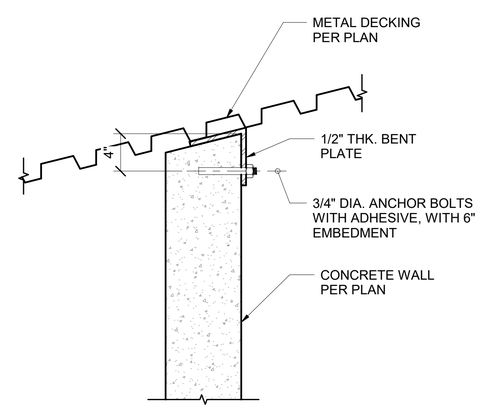

A11 SECTION
SCALE: 1 1/2" = 1'-0"
0 0.25' 0.5' 1' 1.5'

US Army Corps of Engineers ®

MARK	DESCRIPTION	DATE

ISSUE DATE: 15 OCTOBER 2025
SOLICITATION NO.: W912BA22F0002
CONTRACT NO.: W912BA19B0012

DESIGNED BY: C. VALINAS
DRAWN BY: R. TANGONAN
CHECKED BY: B. FUNG
SUBMITTED BY: B. FUNG
SIZE: ANSI D

US ARMY CORPS OF ENGINEERS
HONOLULU DISTRICT
FORT SHAFTER, HAWAII

SSFM INTERNATIONAL, INC.
501 SUMNER STREET, SUITE 620
HONOLULU, HI 96817

JOINT BASE PEARL HARBOR-HICKAM, OAHU, HAWAII
FY22 HAWAI/AIR NATIONAL GUARD (HIANG) F-22 PLUS-UP
ADD EGRESS SHOP

SECTIONS AND DETAILS

SHEET ID
S-507

File Path: M:\2018\2018_Z24.002 DPL_PBM HIANG F22 Plus-Up\CD Dwgs\Struct\00 Current Revit Model\NMD\208087_ES_STRUCT_v23.rvt
Plot Date: 10/15/2025 4:24:33 PM

REVISED FINAL SUBMITTAL

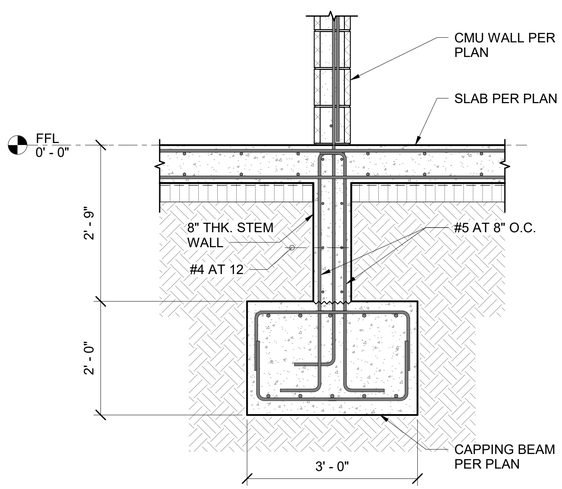

G1 DETAIL

SCALE: 3/4" = 1'-0"

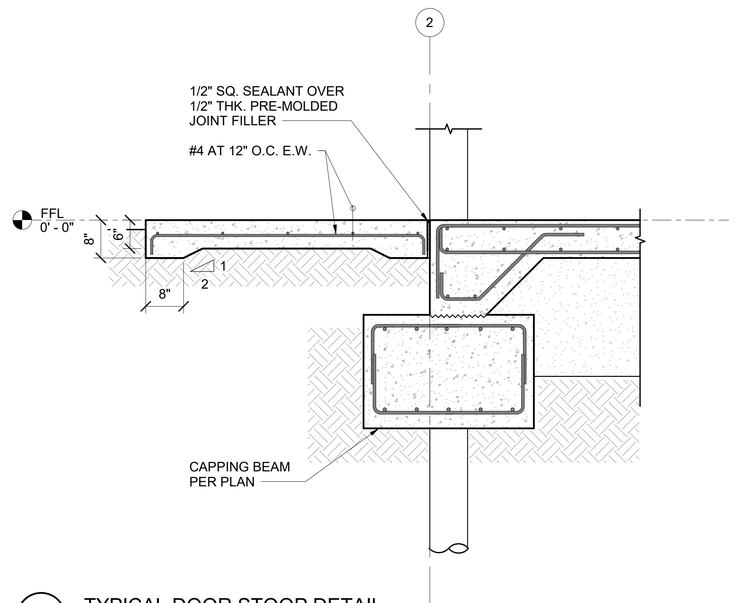

G7 TYPICAL DOOR STOOP DETAIL

SCALE: 3/4" = 1'-0"

NOTES:

1. CONTRACTOR TO COORDINATE PLAN DIMENSIONS OF CONCRETE PADS AND ANCHOR BOLTS WITH MECHANICAL AND ELECTRICAL DRAWINGS AND EQUIPMENT.
2. CONTRACTOR MAY USE 1/2" DIA. BOLTS WITH EXPANSION SHIELDS IN LIEU OF #3 ⌐ BARS.

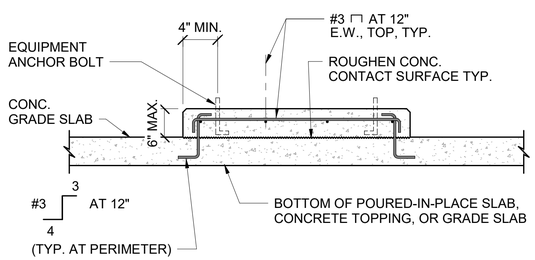

A1 TYPICAL CONCRETE PAD DETAILS 6" THK. MAX

SCALE: : NTS

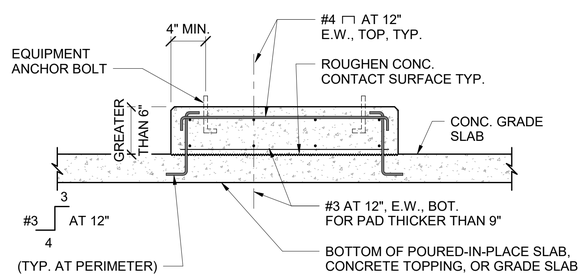

A7 TYPICAL CONCRETE PAD DETAILS GREATER THAN 6" THK.

SCALE: : NTS

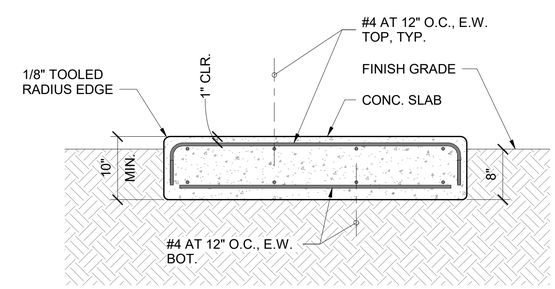

A14 TYPICAL CONCRETE PAD ON GRADE DETAIL

SCALE: : NTS

US Army Corps of Engineers ®

MARK	DESCRIPTION	DATE

DESIGNED BY: C. HOKIE, CAPUCAO
DRAWN BY: R. TANGONAN
CHECKED BY: B. FUNG
SUBMITTED BY: B. FUNG
SIZE: ANSI D
ISSUE DATE: 15 OCTOBER 2025
SOLICITATION NO.: W912BA22F0002
CONTRACT NO.: W912BA19B0072

US ARMY CORPS OF ENGINEERS
HONOLULU DISTRICT
FORT SHAFTER, HAWAII

SSFM INTERNATIONAL, INC.
501 SUMNER STREET, SUITE 620
HONOLULU, HI 96817

JOINT BASE PEARL HARBOR-HICKAM, OAHU, HAWAII
FY22 HAWAII AIR NATIONAL GUARD (HANG) F-22 PLUS-UP
ADD EGRESS SHOP

TYPICAL CONCRETE PAD DETAILS

SHEET ID
S-508

Plot Date: 10/15/2025 4:24:33 PM File Path: M:\2019\2018_2A4.002 DPL_FRM HANG F22 Plus-Up\CD Dwgs\Struct\00 Current Revit Model\NAMD200607_ES_STRUCT_v23.rvt

REVISED FINAL SUBMITTAL

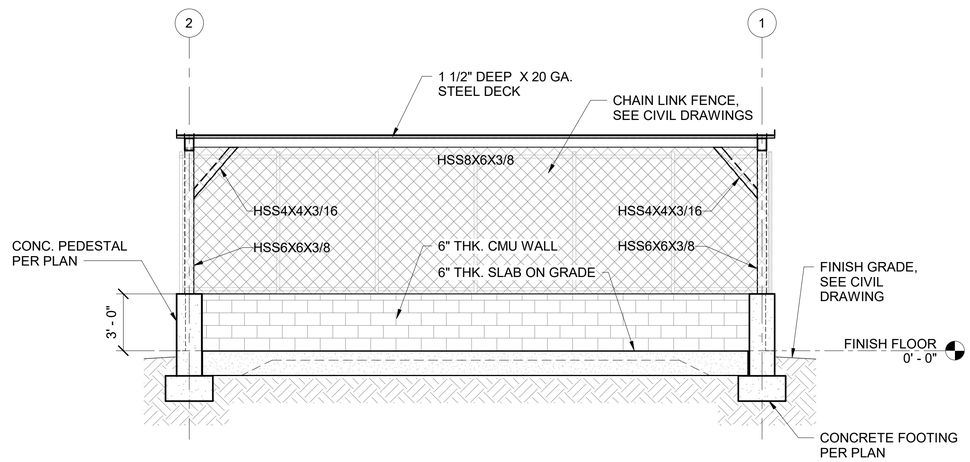

J1 ELEVATION - WEST
SCALE: 1/4" = 1'-0"

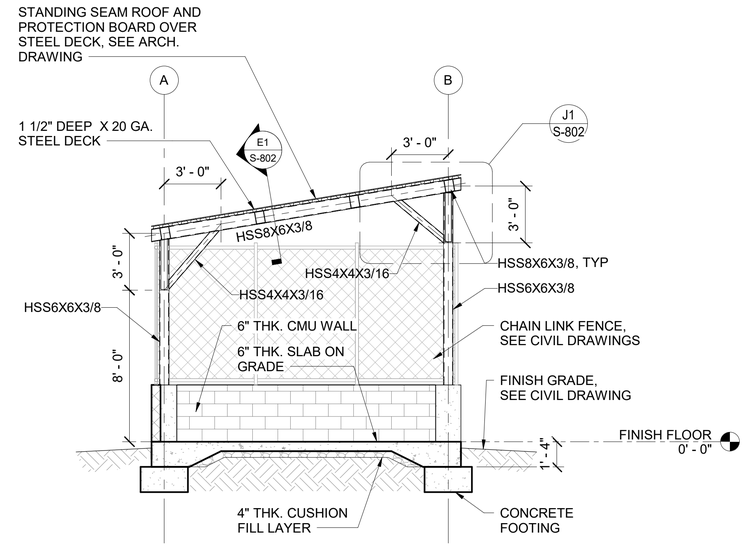

J11 SECTION
SCALE: 1/4" = 1'-0"

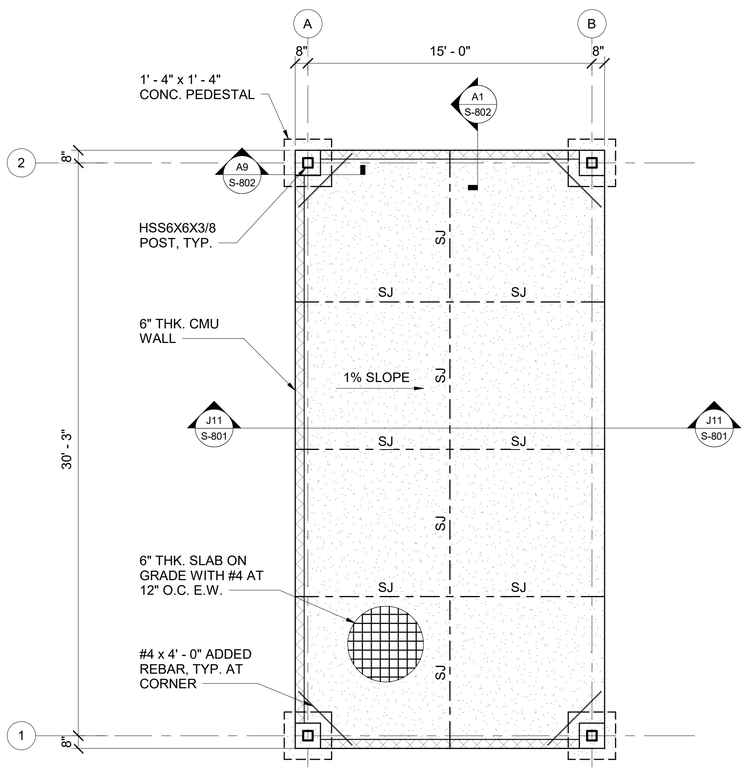

A1 FOUNDATION PLAN - GOX CANOPY SHELTER
SCALE: 1/4" = 1'-0"

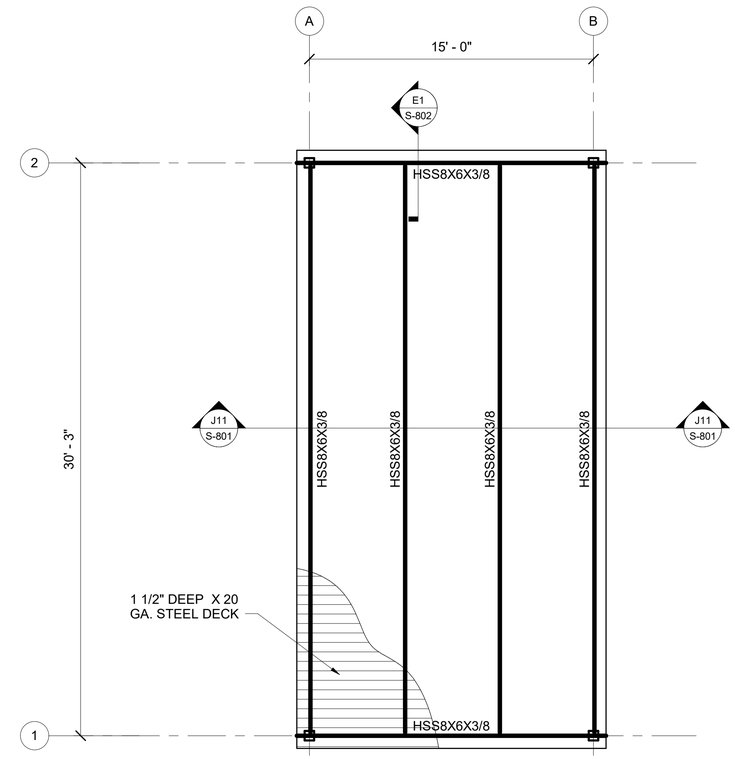

A11 ROOF FRAMING PLAN - GOX CANOPY SHELTER
SCALE: 1/4" = 1'-0"

BID OPTION 4

US Army Corps of Engineers ®

MARK	DESCRIPTION	DATE

ISSUE DATE: 15 OCTOBER 2025
SOLICITATION NO.: W912BA22F0002
CONTRACT NO.: W912BA19B0072

DESIGNED BY: E. CAPUCAO
DRAWN BY: R. TANGONAN
CHECKED BY: B. FUNG
SUBMITTED BY: B. FUNG
SIZE: ANSI D

US ARMY CORPS OF ENGINEERS
HONOLULU DISTRICT
FORT SHAFTER, HAWAII

SSFM INTERNATIONAL, INC.
501 SUMNER STREET, SUITE 620
HONOLULU, HI 96817

JOINT BASE PEARL HARBOR-HICKAM, OAHU, HAWAII
FY22 HAWAII AIR NATIONAL GUARD (HANG) F-22 PLUS-UP
ADD EGRESS SHOP
PROJECT NO.: KMND209087

PLAN AND DETAILS

SHEET ID
S-801

Plot Date: 10/15/2025 3:44:30 PM File Path: M:\2018\2018_224.002 DPL_KMM HANG F22 Plus-Up\5 Dwgs\Struct\00 Current Revit Model\GOX_STRUCT V23.rvt

FINAL SUBMITTAL

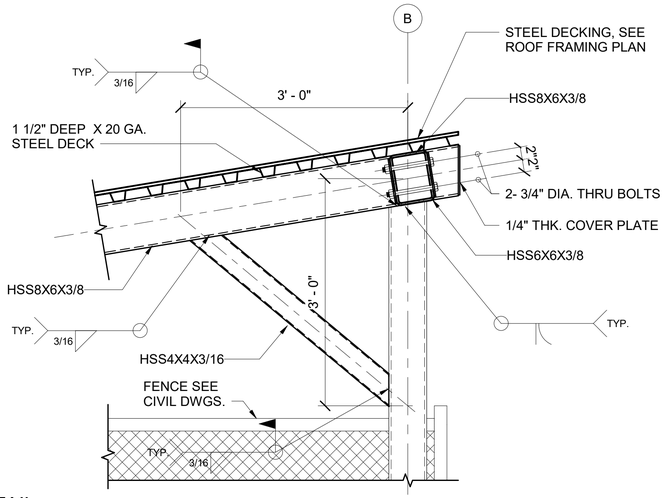

J1 DETAIL
SCALE: 1" = 1'-0"

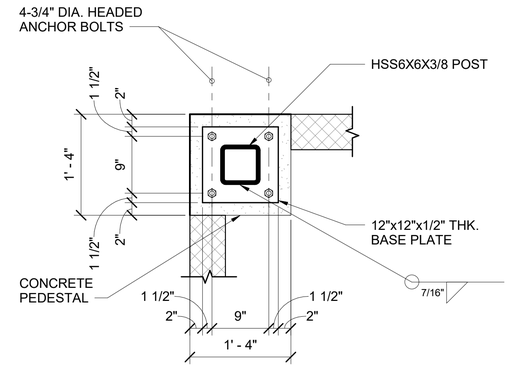

J9 SECTION
SCALE: 1" = 1'-0"

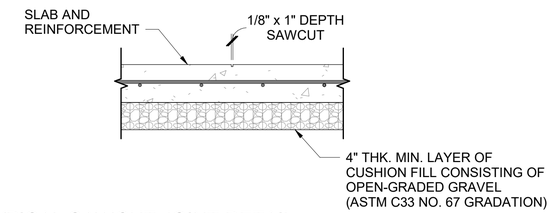

M1 TYPICAL SAWCUT JOINT DETAIL
SCALE: 1" = 1'-0"

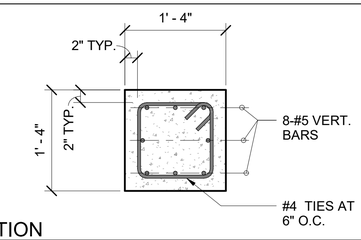

J15 SECTION
SCALE: 1" = 1'-0"

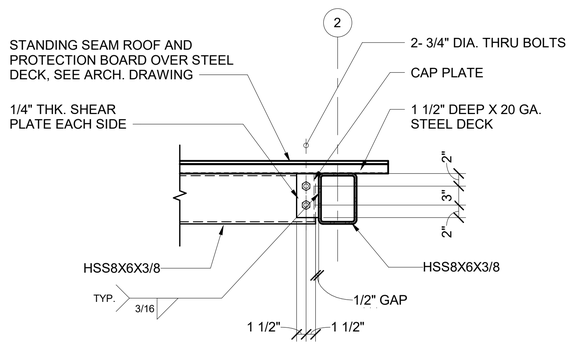

E1 SECTION
SCALE: 1" = 1'-0"

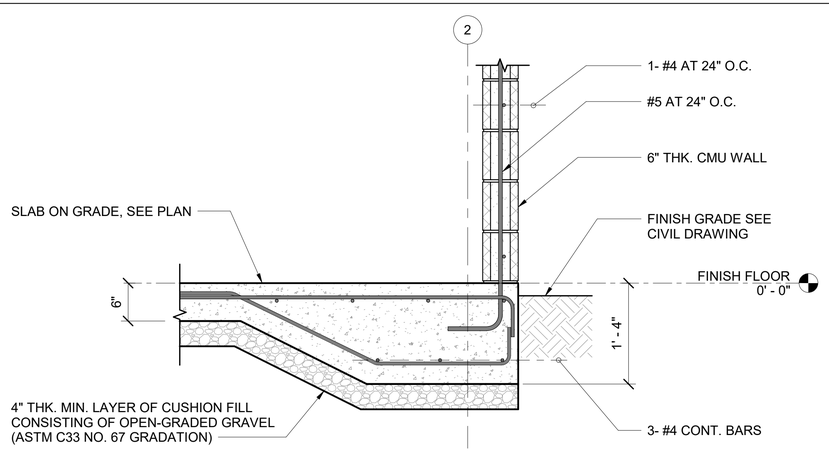

A1 SECTION
SCALE: 1" = 1'-0"

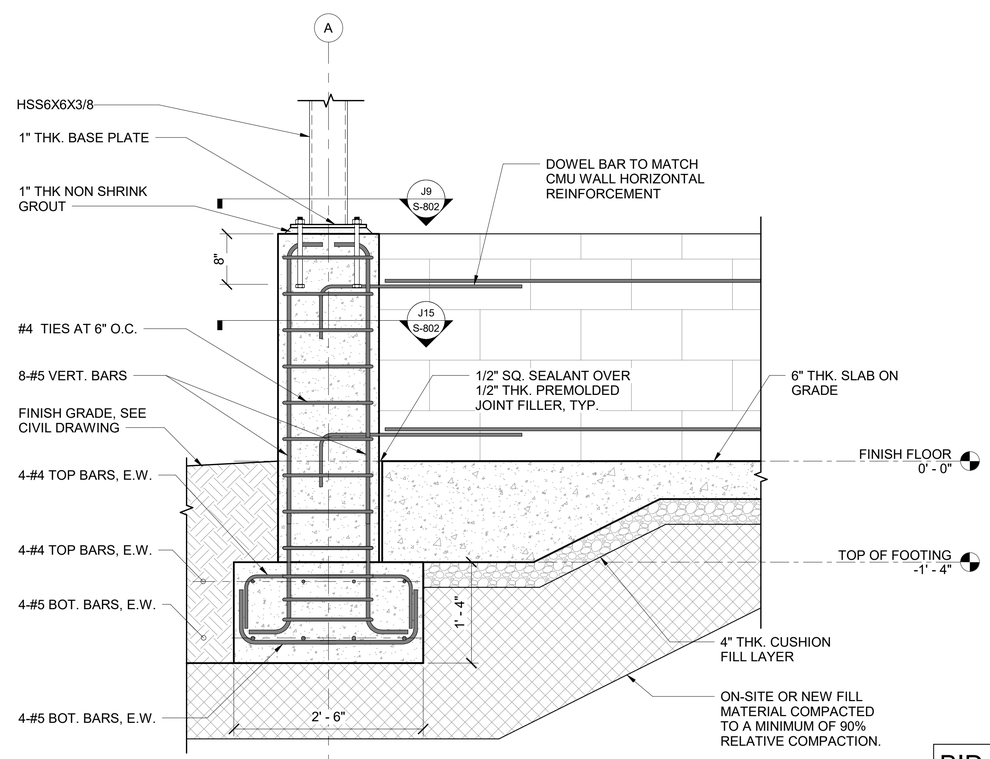

BID OPTION 4

A9 FOUNDATION SECTION
SCALE: 1" = 1'-0"

US Army Corps of Engineers ®

MARK	DESCRIPTION	DATE

ISSUE DATE: 15 OCTOBER 2025
SOLICITATION NO.: W9128A22F0002
CONTRACT NO.: W912BA19B0072

DESIGNED BY: E. CAPUCAO
DRAWN BY: R. TANGONAN
CHECKED BY: B. FUNG
SUBMITTED BY: B. FUNG
SIZE: ANSI D

US ARMY CORPS OF ENGINEERS
HONOLULU DISTRICT
FORT SHAFTER, HAWAII

SSFM INTERNATIONAL, INC.
501 SUMNER STREET, SUITE 620
HONOLULU, HI 96817

JOINT BASE PEARL HARBOR-HICKAM, OAHU, HAWAII
FY22 HAWAII AIR NATIONAL GUARD (HANG) F-22 PLUS-UP
ADD EGRESS SHOP
PROJECT NO.: KMND209087

SECTION AND DETAIL

SHEET ID
S-802

FINAL SUBMITTAL

Plot Date: 10/15/2025 3:44:30 PM
File Path: M:\2018\2018_224.002 DPL_BIM HANG F22 Plus-Up\5 Dwgs\Struct\00 Current Revit Model\SOA_STRUCT V23.rvt

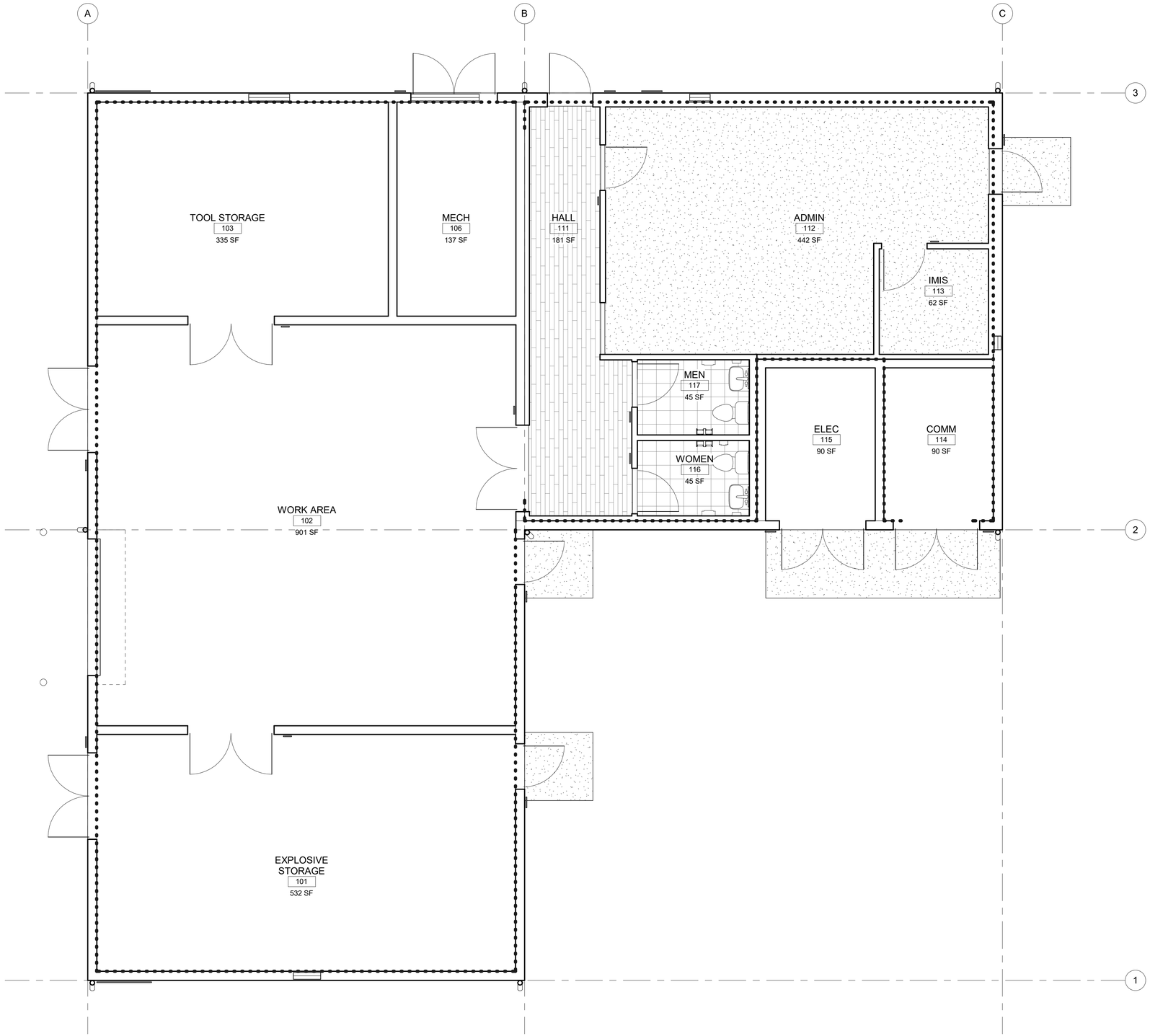

A1 AIR BARRIER FLOOR PLAN
SCALE: 1/4" = 1'-0"

AIR BARRIER GENERAL NOTES

AIR BARRIER GENERAL NOTES:
1. PROVIDE SELF-ADHERING AIR BARRIER AS INDICATED. WRAP AIR BARRIER INTO DOOR, WINDOW, AND LOUVER OPENINGS.
2. REFER TO A-401 FOR AIR BARRIER LAYER IN PARITION/ FURRING WALL DETAILS.
3. REFER TO A-502 FOR AIR BARRIER LAYER IN ROOF DETAILS.
4. SPRAY POLYURETHANE FIRE PROTECTION SEALANT TO BE APPLIED AT ROOF-TO-WALL JUCTURE, SOFFITS, WALL-TO-FOUNDATION CONNECTION, AND ALL PIPE PENETRATIONS AND OTHER OPENINGS.

LEGEND

- NEW WORK SCOPE TYP
- CMU INSULATED METAL STUD
- CONCRETE
- MASONRY
- CERAMIC TILE
- ROOM NAME 101 — ROOM TAG
- AIR BARRIER

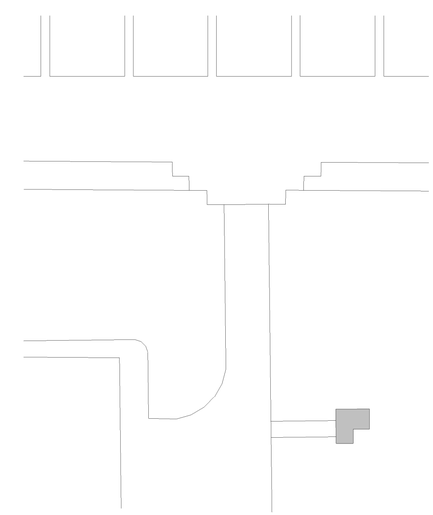

N KEY PLAN (NTS)
EGRESS FACILITY

US Army Corps of Engineers ®

MARK	DESCRIPTION	DATE

ISSUE DATE: 15 OCTOBER 2025
SOLICITATION NO.: W912BA22F0002
CONTRACT NO.: W912BA15B0012

DESIGNED BY: J. VANN
DRAWN BY: K. PANANGANAN
CHECKED BY: J. VANN
SUBMITTED BY: E. EBERT
SIZE: ANSI D

US ARMY CORPS OF ENGINEERS
HONOLULU DISTRICT
FORT SHAFTER, OAHU, HAWAII

RIM ARCHITECTS
55 MERCHANT STREET SUITE 1400,
HONOLULU, HI 96813

JOINT BASE PEARL HARBOR-HICKAM, OAHU, HAWAII
FY22 HAWAII AIR NATIONAL GUARD (HIANG) F-22 PLUS-UP

AIR BARRIER FLOOR PLAN

SHEET ID
A-001

Plot Date: 10/17/2025 3:37:05 PM File Path: Autodesk Docs://18329.013 - HIANG F-22 Plus-Up Projects/KMEQ206587_ES_ARCH.rvt

REVISED FINAL SUBMITTAL

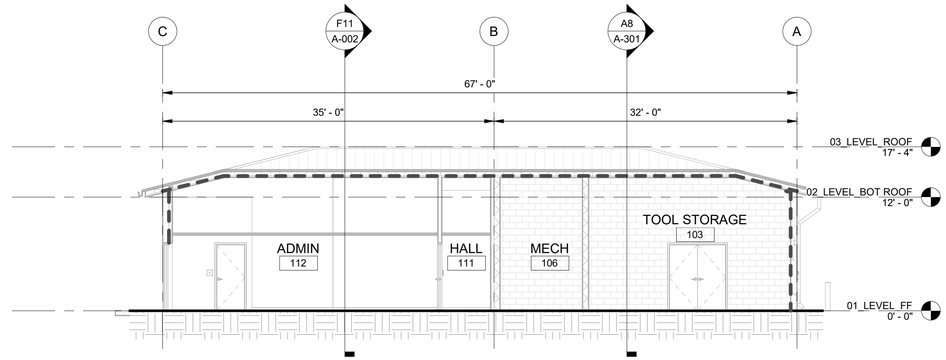

K8 AIR BARRIER DIAGRAM 3

SCALE: 1/8" = 1'-0"

0 4' 8' 16'

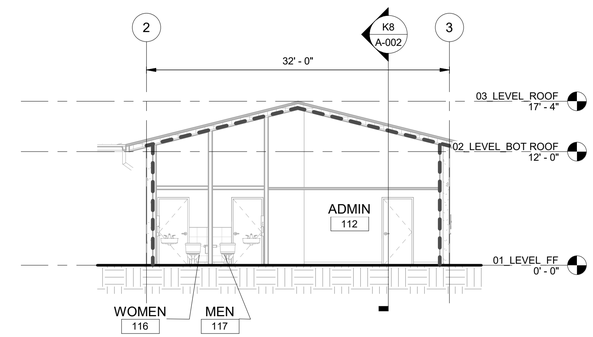

F11 AIR BARRIER DIAGRAM 2

SCALE: 1/8" = 1'-0"

0 4' 8' 16'

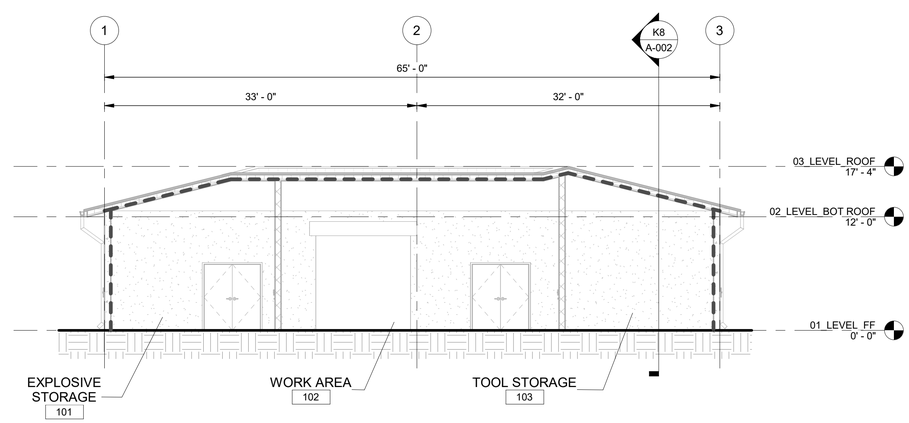

A8 AIR BARRIER DIAGRAM 1

SCALE: 1/8" = 1'-0"

0 4' 8' 16'

AIR BARRIER GENERAL NOTES

AIR BARRIER GENERAL NOTES:

1. PROVIDE SELF-ADHERING AIR BARRIER AS INDICATED. WRAP AIR BARRIER INTO DOOR, WINDOW, AND LOUVER OPENINGS.
2. REFER TO A-401 FOR AIR BARRIER LAYER IN PARITION/ FURRING WALL DETAILS.
3. REFER TO A-502 FOR AIR BARRIER LAYER IN ROOF DETAILS.
4. SPRAY POLYURETHANE FIRE PROTECTION SEALANT TO BE APPLIED AT ROOF-TO-WALL JUCTURE, SOFFITS, WALL-TO-FOUNDATION CONNECTION, AND ALL PIPE PENETRATIONS AND OTHER OPENINGS.

LEGEND

NEW WORK SCOPE TYP

CMU INSULATED METAL STUD

CONCRETE

MASONRY

CERAMIC TILE

ROOM NAME
101
ROOM TAG

AIR BARRIER

US Army Corps of Engineers ®

MARK	DESCRIPTION	DATE

ISSUE DATE: 15 OCTOBER 2025
SOLICITATION NO.: W912BA22F0002
CONTRACT NO.: W912BA15D0012

DESIGNED BY: J. VANN
DRAWN BY: K. PANANGANAN
CHECKED BY: J. VANN
SUBMITTED BY: E. EBERT
SIZE: ANSI D

US ARMY CORPS OF ENGINEERS
HONOLULU DISTRICT
FORT SHAFTER, OAHU, HAWAII

RIM ARCHITECTS
55 MERCHANT STREET SUITE 1400,
HONOLULU, HI 96813

JOINT BASE PEARL HARBOR-HICKAM, OAHU, HAWAII
FY22 HAWAII AIR NATIONAL GUARD (HANG) F-22 PLUS-UP

AIR BARRIER BUILDING SECTIONS

SHEET ID

A-002

Plot Date: 10/17/2025 3:37:06 PM File Path: Autodesk Docs://18329.013 - HANG F-22 Plus-Up Projects/NMD20596F_ES_ARCH.rvt

REVISED FINAL SUBMITTAL

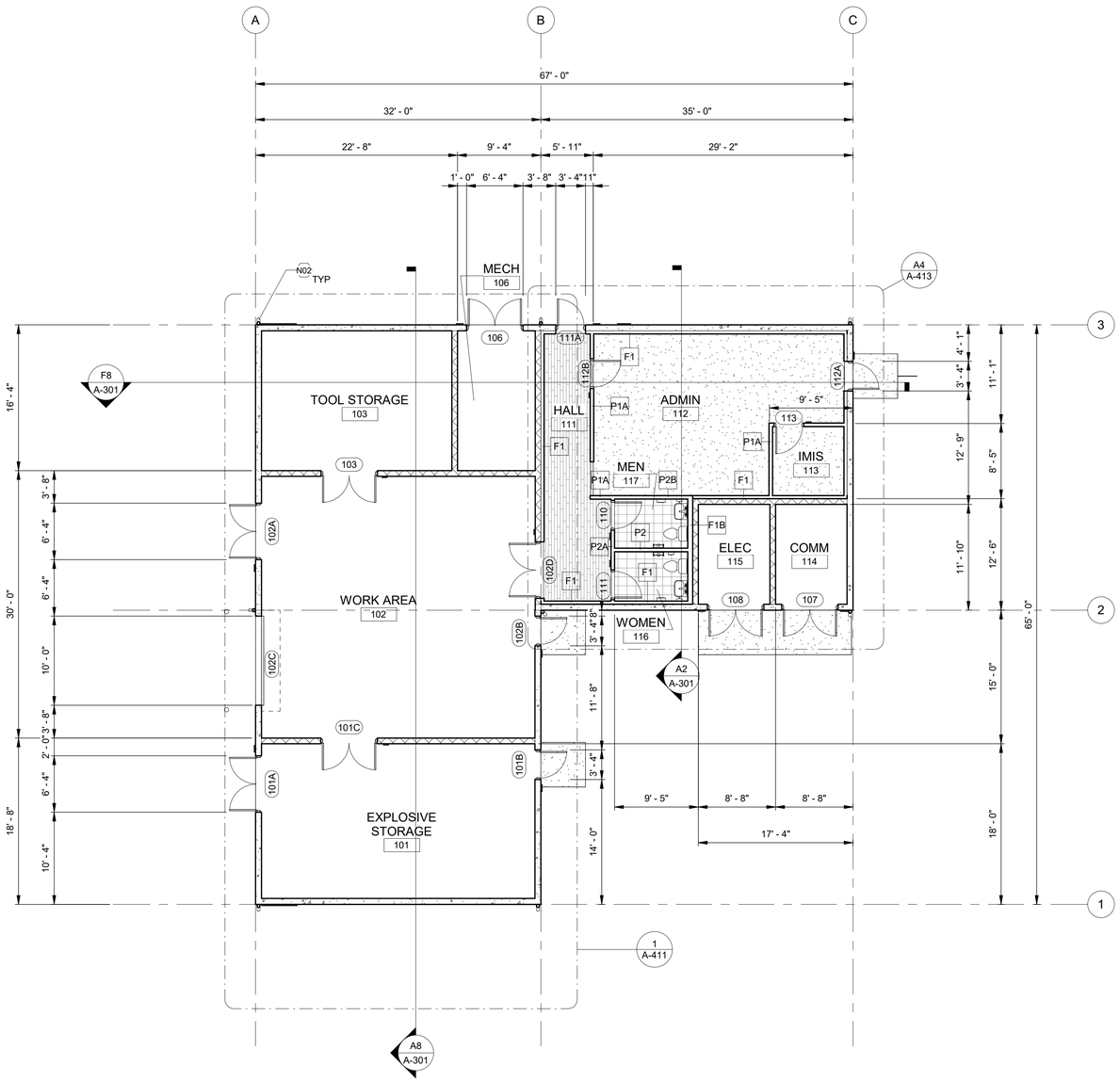

FLOOR PLAN GENERAL NOTES

PLAN GENERAL NOTES:

1. THE CONTRACTOR SHALL BE RESPONSIBLE FOR COORDINATING THE WORK AMONG THE VARIOUS TRADES AS NECESSARY TO AVOID CONFLICTS AND TO ENSURE THE INSTALLATION OF ALL WORK WITHIN THE AVAILABLE SPACE.
2. REFER TO ENLARGED PARTIAL PLANS FOR MORE INFORMATION.
3. REFER TO WALL TYPES A-501.

LEGEND

- NEW WORK SCOPE TYP
- CMU INSULATED METAL STUD
- CONCRETE
- MASONRY
- CERAMIC TILE
- 101 — DOOR TAG
- ROOM NAME 101 — ROOM TAG
- 11 — WALL TAG

KEYNOTES

N02	PROVIDE PREFINISHED DOWNSPOUT

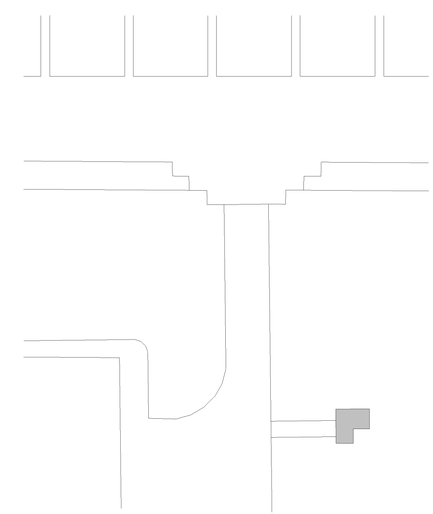

N KEY PLAN (NTS)

EGRESS FACILITY

A1 FLOOR PLAN

SCALE: 1/8" = 1'-0"

PLAN NORTH

0 4' 8' 16'

US Army Corps of Engineers ®

MARK	DESCRIPTION	DATE

ISSUE DATE: 15 OCTOBER 2025
SOLICITATION NO.: W912BA22F0002
CONTRACT NO.: W912BA19B0012

DESIGNED BY: J. VANN
DRAWN BY: K. PANANGANAN
REVIEWED BY: J. VANN
SUBMITTED BY: E. EBERT
SIZE: ANSI D

US ARMY CORPS OF ENGINEERS
HONOLULU DISTRICT
FORT SHAFTER, OAHU, HAWAII

RIM ARCHITECTS
55 MERCHANT STREET SUITE 1400,
HONOLULU, HI 96813

JOINT BASE PEARL HARBOR-HICKAM, OAHU, HAWAII
FY22 HAWAI'I AIR NATIONAL GUARD (HIANG) F-22 PLUS-UP

FLOOR PLAN

SHEET ID

A-101

Plot Date: 10/17/2025 3:37:07 PM File Path: Autodesk Docs://18329.013 - HIANG F-22 Plus-Up Projects/NMD20190687_ES_ARCH.rvt

REVISED FINAL SUBMITTAL

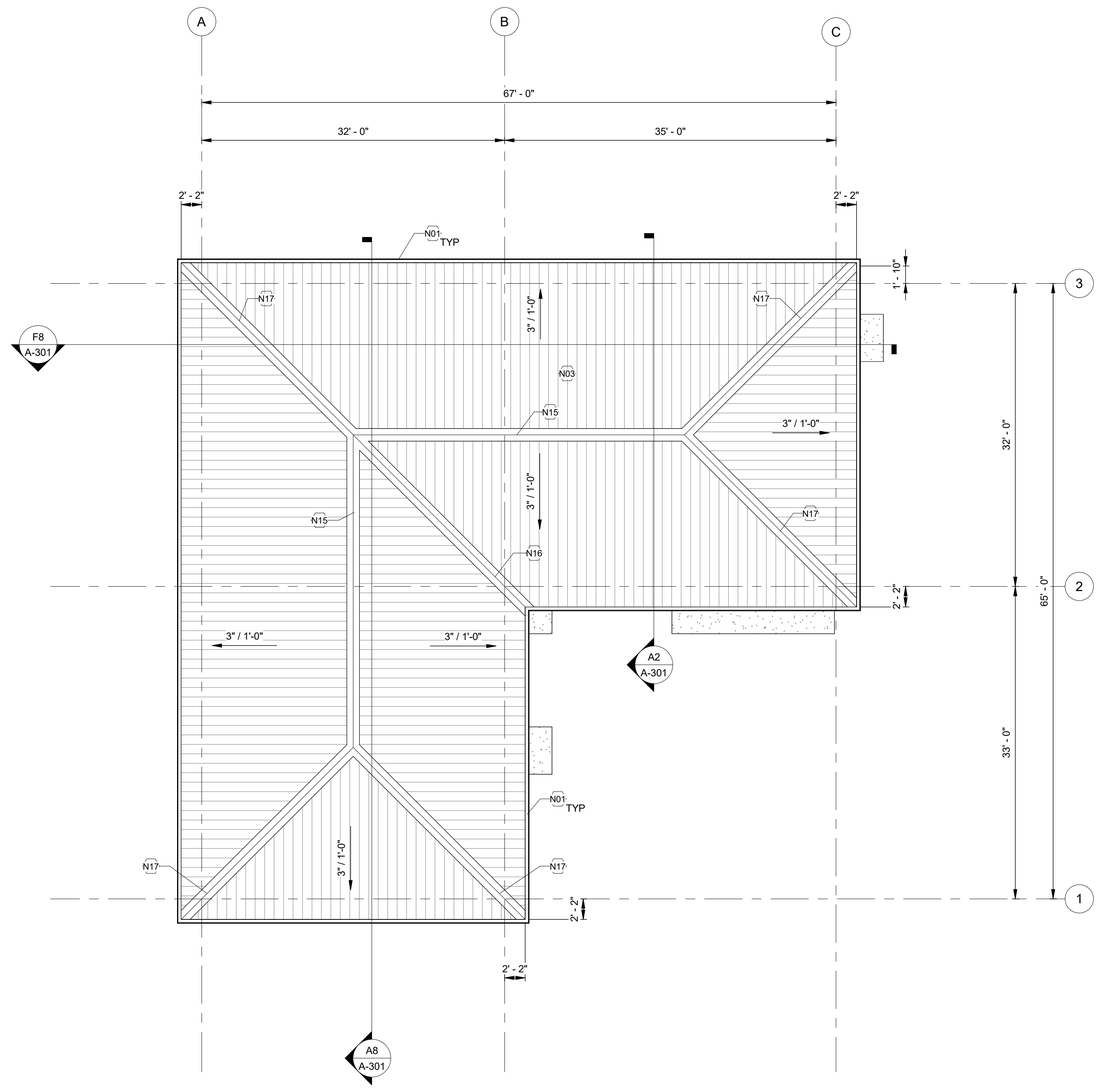

A1 ROOF PLAN

SCALE: 1/8" = 1'-0"

PLAN NORTH

0 4' 8' 16'

ROOF PLAN GENERAL NOTES

LEGEND

SSMR - STANDING SEAM METAL ROOF

KEYNOTES

N01	PROVIDE PREFINISHED GUTTER
N03	PROVIDE STANDING SEAM ROOFING
N15	RIDGE
N16	VALLEY
N17	HIP

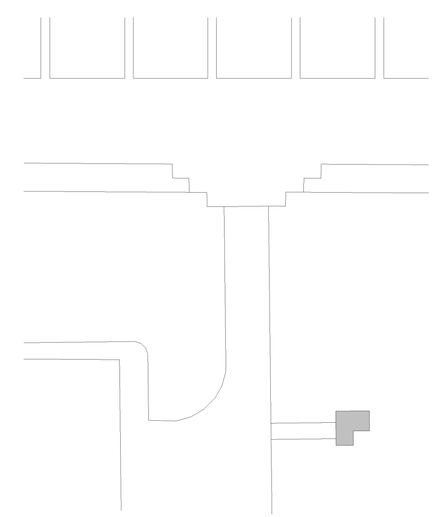

N KEY PLAN (NTS)

EGRESS FACILITY

US Army Corps of Engineers ®

MARK	DESCRIPTION	DATE

ISSUE DATE: 15 OCTOBER 2025

SOLICITATION NO.: W912BA22F0002

CONTRACT NO.: W912BA15D0012

DESIGNED BY: J. VANN

DRAWN BY: K. PANANGANAN

CHECKED BY: J. VANN

SUBMITTED BY: E. EBERT

SIZE: ANSI D

US ARMY CORPS OF ENGINEERS
HONOLULU DISTRICT
FORT SHAFTER, OAHU, HAWAII

RIM ARCHITECTS
55 MERCHANT STREET SUITE 1400,
HONOLULU, HI 96813

JOINT BASE PEARL HARBOR-HICKAM, OAHU, HAWAII
FY22 HAWAII AIR NATIONAL GUARD (HIANG) F-22 PLUS-UP

ROOF PLAN

SHEET ID

A-102

Plot Date: 10/17/2025 3:37:08 PM File Path: Autodesk Docs://18329.013 - HIANG F-22 Plus-Up Projects/NMD2019087_ES_ARCH.rvt

REVISED FINAL SUBMITTAL

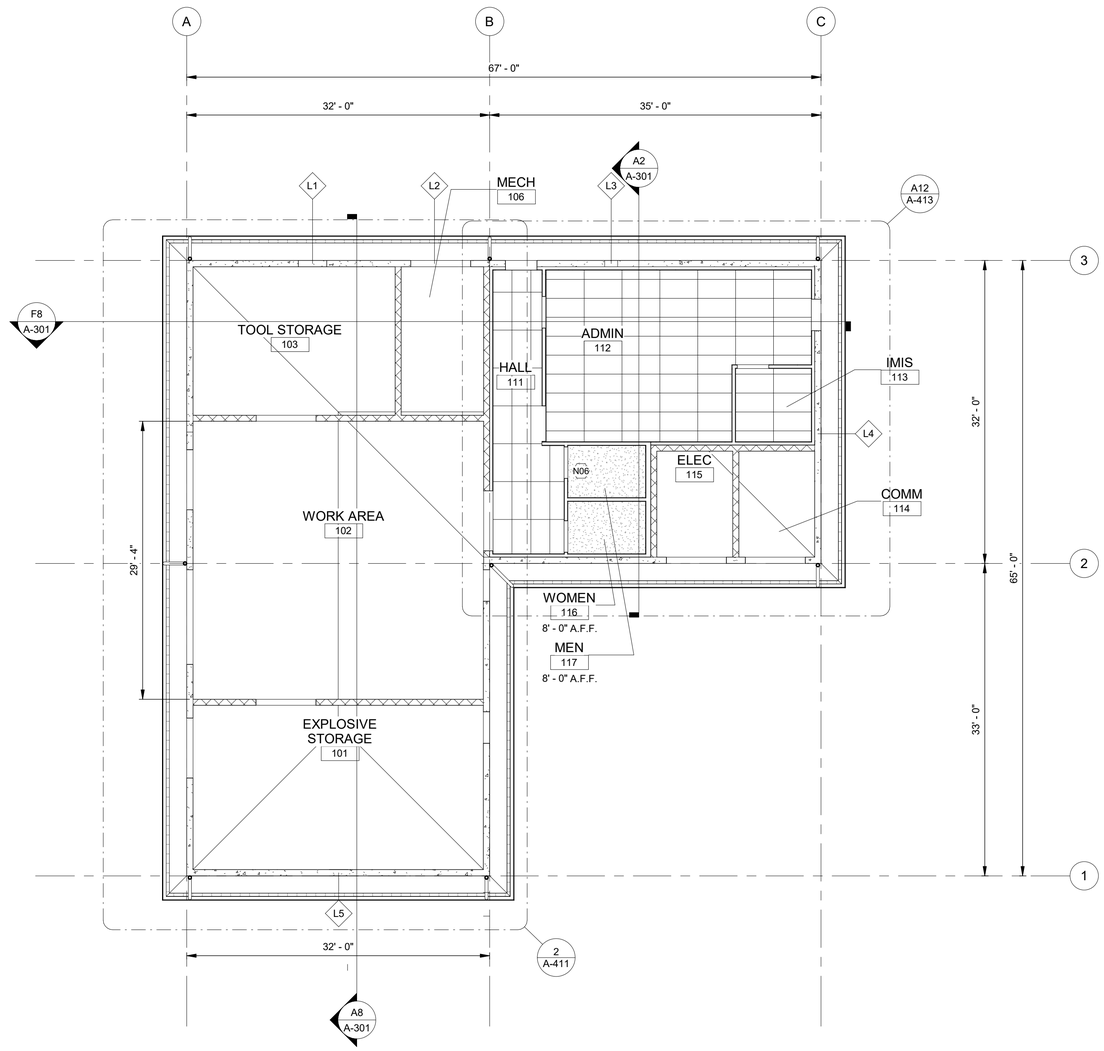

CEILING PLAN GENERAL NOTES

REFLECTED CEILING PLAN GENERAL NOTES:
1. COORDINATE CLG FIXTURES WITH OTHER DISCIPLINES.
2. UNLESS OTHERWISE NOTED, LIGHT FIXTURES ARE CENTERED IN ROOM WITH NEW CEILINGS.

LEGEND

	GYP BOARD CEILING		CONCRETE
	CMU INSULATED METAL STUD		MASONRY
101	DOOR TAG	ROOM NAME 101	ROOM TAG
	LOUVER TAG		
	4" DIA LED DOWNLIGHT SEE ELECT DWGS		
	WALL MOUNTED EXTERIOR LIGHT SEE ELEC DWGS		
	RECESSED LIGHT FIXTURE		
	LED LENSED STRIPLIGHT SEE ELECT DWGS		
	OVER HEAD MONORAIL CRANE		

NXX KEYNOTES

N06	PROVIDE LIGHT FIXTURES - SEE ELEC DWGS

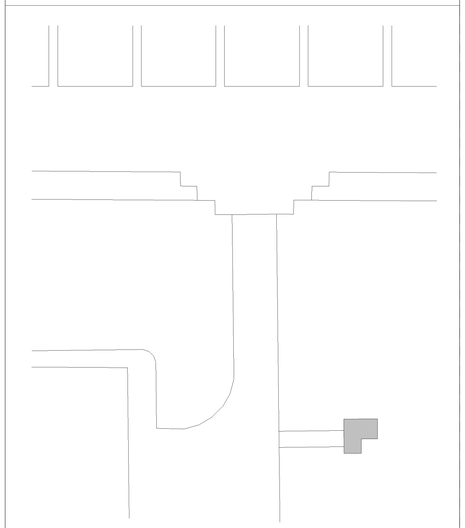

N KEY PLAN (NTS)
EGRESS FACILITY

PLAN NORTH

0 4' 8' 16'

A1 REFLECTED CEILING PLAN
SCALE: 1/8" = 1'-0"

US Army Corps of Engineers ®

MARK	DESCRIPTION	DATE

ISSUE DATE: 15 OCTOBER 2025
SOLICITATION NO.: W912BA22F0002
CONTRACT NO.: W912BA15D0012

DESIGNED BY: J. VANN
DRAWN BY: K. PANANGANAN
CHECKED BY: J. VANN
SUBMITTED BY: E. EBERT
SIZE: ANSI D

US ARMY CORPS OF ENGINEERS
HONOLULU DISTRICT
FORT SHAFTER, OAHU, HAWAII

RIM ARCHITECTS
55 MERCHANT STREET SUITE 1400,
HONOLULU, HI 96813

JOINT BASE PEARL HARBOR-HICKAM, OAHU, HAWAII
FY22 HAWAII AIR NATIONAL GUARD (HIANG) F-22 PLUS-UP

REFLECTED CEILING PLAN

SHEET ID
A-103

Plot Date: 10/17/2025 3:37:09 PM File Path: Autodesk Docs://18329.013 - HIANG F-22 Plus-Up Projects/NMD2206587_ES_ARCH.rvt

REVISED FINAL SUBMITTAL

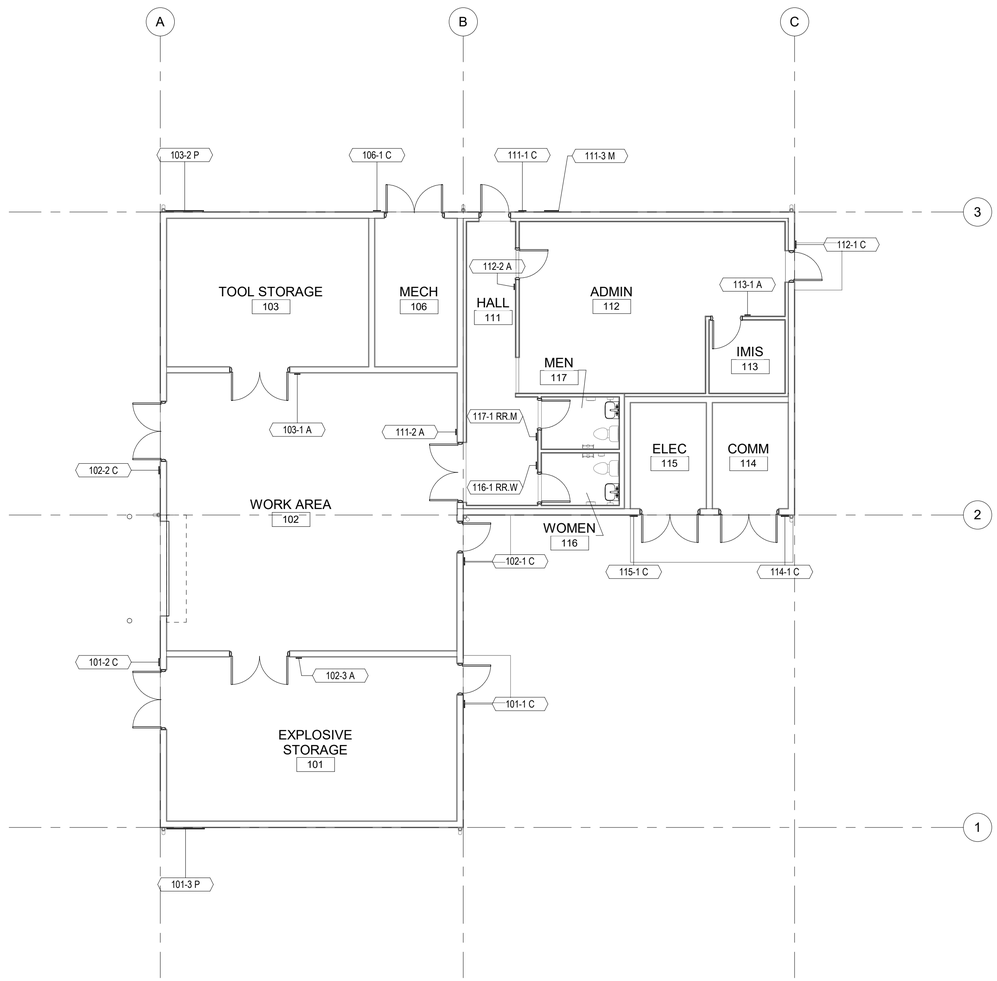

PLAN NORTH

0 4' 8' 16'

A1 SIGNAGE PLAN

SCALE: 1/8" = 1'-0"

FLOOR PLAN GENERAL NOTES

PLAN GENERAL NOTES:

1. THE CONTRACTOR SHALL BE RESPONSIBLE FOR COORDINATING THE WORK AMONG THE VARIOUS TRADES AS NECESSARY TO AVOID CONFLICTS AND TO ENSURE THE INSTALLATION OF ALL WORK WITHIN THE AVAILABLE SPACE.
2. REFER TO ENLARGED PARTIAL PLANS FOR MORE INFORMATION.
3. REFER TO WALL TYPES A-501.

LEGEND

- NEW WORK SCOPE TYP
- CMU INSULATED METAL STUD
- CONCRETE
- MASONRY
- CERAMIC TILE
- 101 — DOOR TAG
- ROOM NAME 101 — ROOM TAG
- 1i — WALL TAG

KEYNOTES

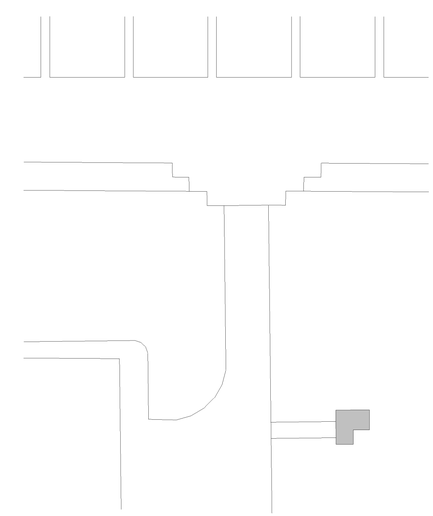

N KEY PLAN (NTS)

EGRESS FACILITY

US Army Corps of Engineers ®

MARK	DESCRIPTION	DATE

ISSUE DATE: 15 OCTOBER 2025
SOLICITATION NO.: W912BA22F0002
CONTRACT NO.: W912BA19B0012

DESIGNED BY: J. VANN
DRAWN BY: K. PANANGANAN
CHECKED BY: J. VANN
SUBMITTED BY: E. EBERT
SIZE: ANSI D

US ARMY CORPS OF ENGINEERS
HONOLULU DISTRICT
FORT SHAFTER, OAHU, HAWAII

RIM ARCHITECTS
55 MERCHANT STREET SUITE 1400,
HONOLULU, HI 96813

JOINT BASE PEARL HARBOR-HICKAM, OAHU, HAWAII
FY22 HAWAII AIR NATIONAL GUARD (HIANG) F-22 PLUS-UP

SIGNAGE PLAN

SHEET ID

A-104

Plot Date: 10/17/2025 3:37:10 PM File Path: Autodesk Docs://18329.013 - HIANG F-22 Plus-Up Projects/NMD20190687_ES_ARCH.rvt

REVISED FINAL SUBMITTAL

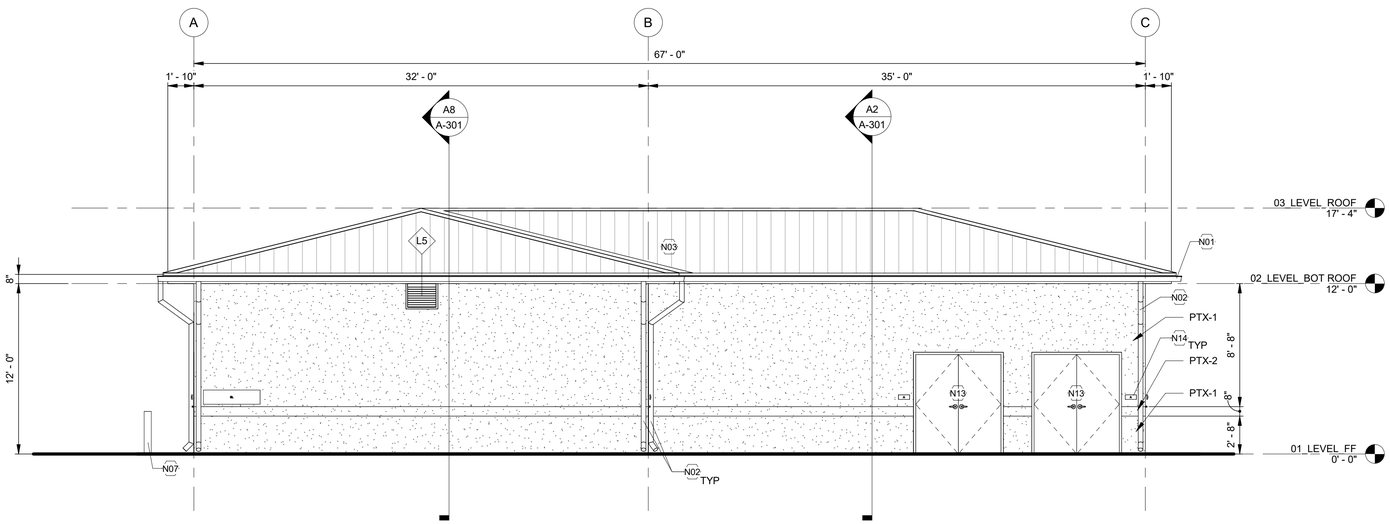

G1 SOUTH ELEVATION

SCALE: 3/16" = 1'-0"

0 2' 4' 8' 12'

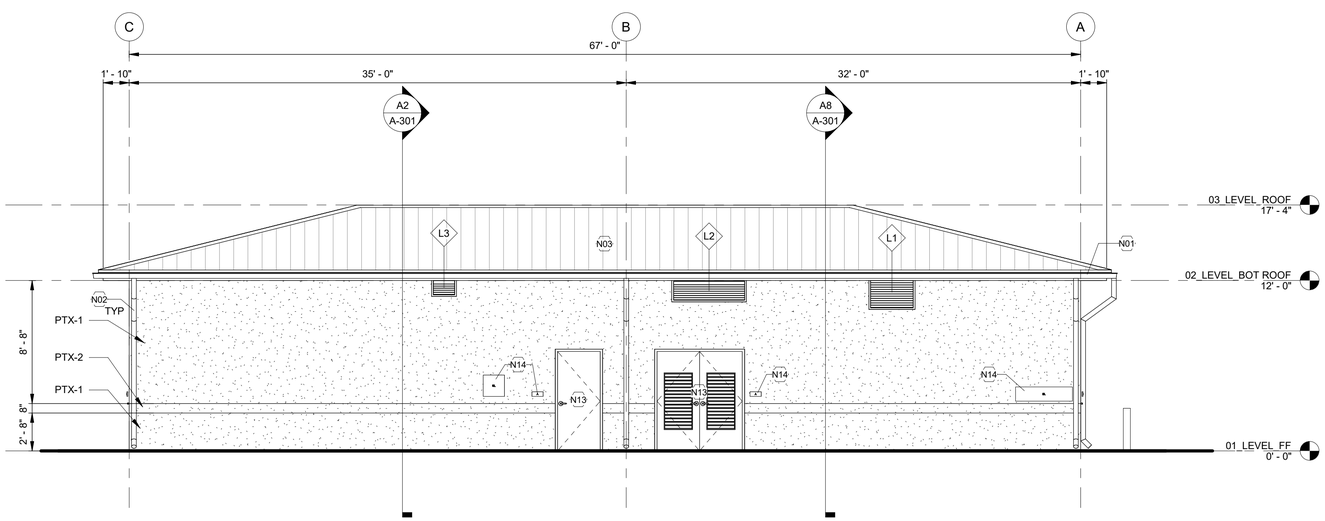

A1 NORTH ELEVATION

SCALE: 3/16" = 1'-0"

0 2' 4' 8' 12'

EXTERIOR ELEVATION GENERAL NOTES

EXTERIOR ELEVATION GENERAL NOTES:

1. FOR EXTERIOR FINISHES REFER TO FINISH SCHEUDLE ON A-602.

LEGEND

10 LOUVER TAG

KEYNOTES

N01	PROVIDE PREFINISHED GUTTER
N02	PROVIDE PREFINISHED DOWNSPOUT
N03	PROVIDE STANDING SEAM ROOFING
N07	PROVIDE BOLLARD - REFER TO CIVIL DWGS
N13	PROVIDE DR, FR, AND THRESHOLD - REFER TO DR SCHED
N14	PROVIDE SIGNAGE - REFER TO SIGNAGE PLAN

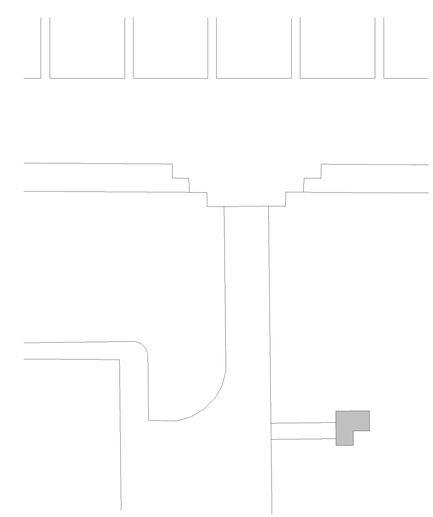

N

KEY PLAN (NTS)

EGRESS FACILITY

US Army Corps of Engineers ®

MARK	DESCRIPTION	DATE

DESIGNED BY: J. VANN
DRAWN BY: K. PANANGANAN
CHECKED BY: J. VANN
SUBMITTED BY: E. EBERT
SIZE: ANSI D

ISSUE DATE: 15 OCTOBER 2025
SOLICITATION NO.: W912BA22F0002
CONTRACT NO.: W912BA19B0012

US ARMY CORPS OF ENGINEERS
HONOLULU DISTRICT
FORT SHAFTER, OAHU, HAWAII

RIM ARCHITECTS
55 MERCHANT STREET SUITE 1400,
HONOLULU, HI 96813

JOINT BASE PEARL HARBOR-HICKAM, OAHU, HAWAII
FY22 HAWAII AIR NATIONAL GUARD (HIANG) F-22 PLUS-UP

ELEVATIONS

SHEET ID

A-201

File Path: Autodesk Docs://18329.013 - HIANG F-22 Plus-Up Projects/NMD220598F_ES_ARCH.rvt

Plot Date: 10/17/2025 3:37:11 PM

REVISED FINAL SUBMITTAL

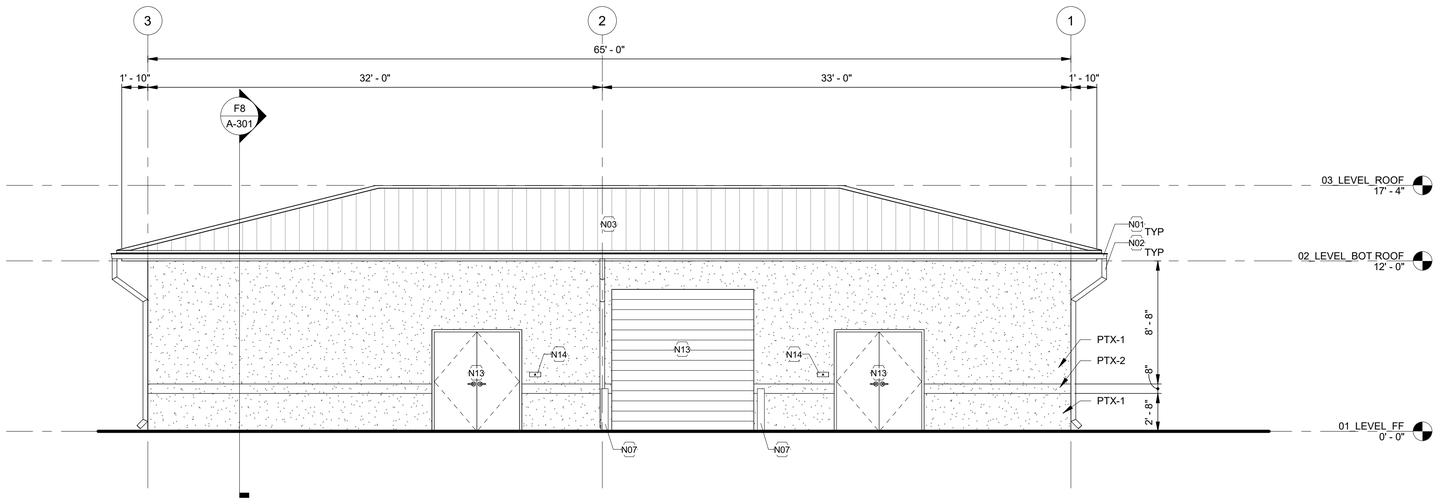

G1 WEST ELEVATION

SCALE: 3/16" = 1'-0"

0 2' 4' 8' 12'

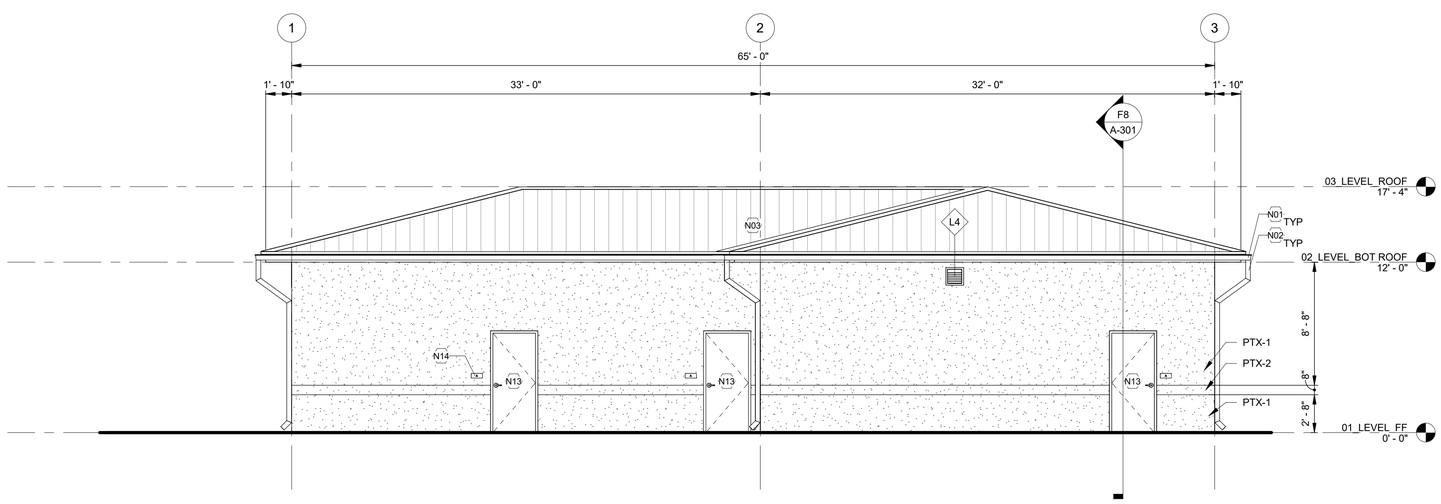

A1 EAST ELEVATION

SCALE: 3/16" = 1'-0"

0 2' 4' 8' 12'

EXTERIOR ELEVATION GENERAL NOTES

EXTERIOR ELEVATION GENERAL NOTES:
1. FOR EXTERIOR FINISHES REFER TO FINISH SCHEUDLE ON A-602.

LEGEND

10 LOUVER TAG

KEYNOTES

N01	PROVIDE PREFINISHED GUTTER
N02	PROVIDE PREFINISHED DOWNSPOUT
N03	PROVIDE STANDING SEAM ROOFING
N07	PROVIDE BOLLARD - REFER TO CIVIL DWGS
N13	PROVIDE DR, FR, AND THRESHOLD - REFER TO DR SCHED
N14	PROVIDE SIGNAGE - REFER TO SIGNAGE PLAN

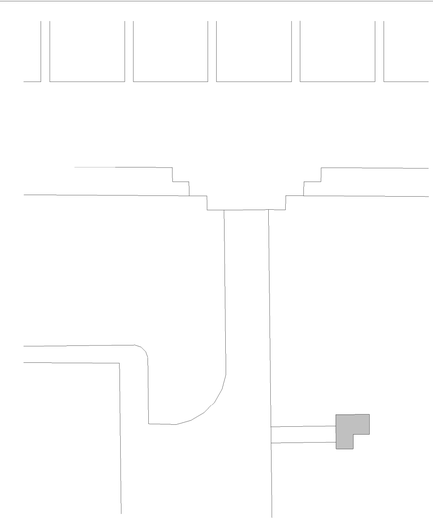

N KEY PLAN (NTS)

EGRESS FACILITY

US Army Corps of Engineers ®

MARK	DESCRIPTION	DATE

DESIGNED BY: J. VANN
DRAWN BY: K. PANANGANAN
CHECKED BY: J. VANN
SUBMITTED BY: E. EBERT
SIZE: ANSI D
ISSUE DATE: 15 OCTOBER 2025
SOLICITATION NO.: W912BA22F0002
CONTRACT NO.: W912BA-19D0012

US ARMY CORPS OF ENGINEERS
HONOLULU DISTRICT
FORT SHAFTER, OAHU, HAWAII

RIM ARCHITECTS
55 MERCHANT STREET SUITE 1400,
HONOLULU, HI 96813

JOINT BASE PEARL HARBOR-HICKAM, OAHU, HAWAII
FY22 HAWAII AIR NATIONAL GUARD (HIANG) F-22 PLUS-UP

ELEVATIONS

SHEET ID

A-202

File Path: Autodesk Docs://183026.013 - HIANG F-22 Plus-Up Projects/NM0020087_ES_ARCH.rvt

Plot Date: 10/17/2025 3:37:12 PM

REVISED FINAL SUBMITTAL

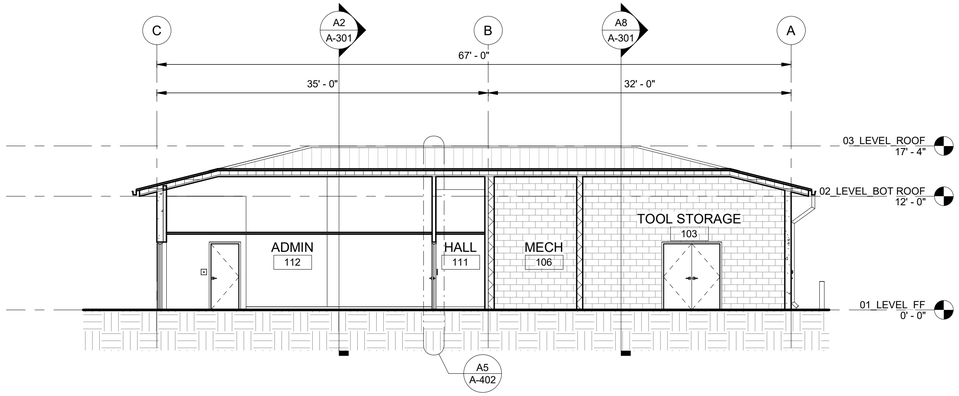

F8 BUILDING SECTION 3

SCALE: 1/8" = 1'-0"

0 4' 8' 16'

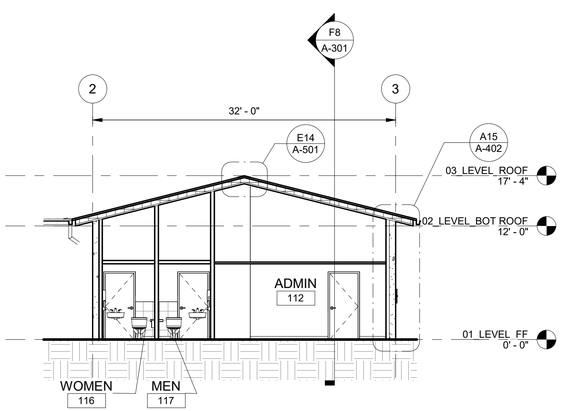

A2 BUILDING SECTION 2

SCALE: 1/8" = 1'-0"

0 4' 8' 16'

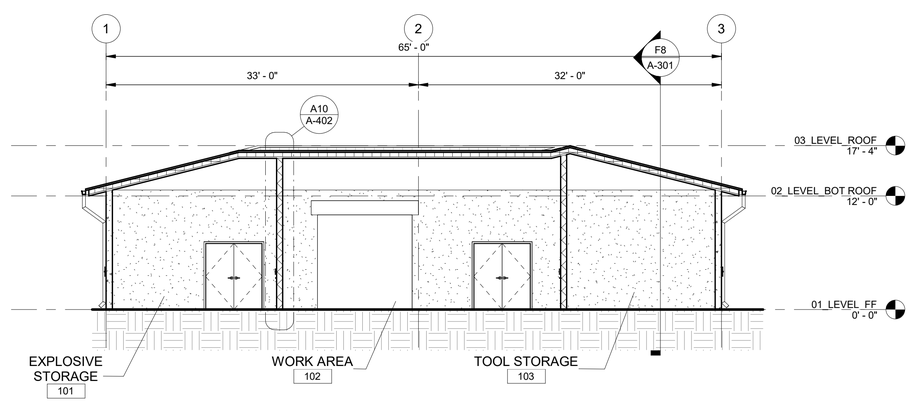

A8 BUILDING SECTION 1

SCALE: 1/8" = 1'-0"

0 4' 8' 16'

BUILDING SECTION GENERAL NOTES

1. REFER TO WALL TYPE A-401

LEGEND

CMU

Room name
101

ROOM TAG

US Army Corps of Engineers ®

MARK	DESCRIPTION	DATE

DESIGNED BY: J. VANN
DRAWN BY: K. PANANGANAN
CHECKED BY: J. VANN
SUBMITTED BY: E. EBERT
SIZE: ANSI D

ISSUE DATE: 15 OCTOBER 2025
SOLICITATION NO.: W9128A22F0002
CONTRACT NO.: W9128A19D0072

US ARMY CORPS OF ENGINEERS
HONOLULU DISTRICT
FORT SHAFTER, OAHU, HAWAII

RIM ARCHITECTS
55 MERCHANT STREET SUITE 1400,
HONOLULU, HI 96813

JOINT BASE PEARL HARBOR-HICKAM, OAHU, HAWAII
FY22 HAWAI'AIR NATIONAL GUARD (HIANG) F-22 PLUS-UP

BUILDING SECTIONS

SHEET ID

A-301

REVISED FINAL SUBMITTAL

Plot Date: 10/17/2025 3:37:13 PM File Path: Autodesk Docs://18329.013 - HIANG F-22 Plus-Up Projects/NMD20596F_ES_ARCH.rvt

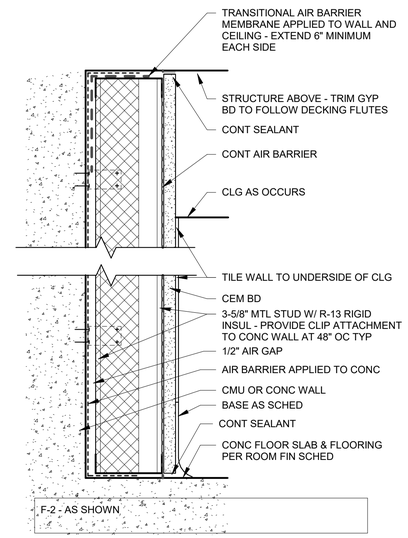

H11 F2 - GYP / STUD FURRING

SCALE: 3" = 1'-0"

0 1.5" 3" 6" 9"

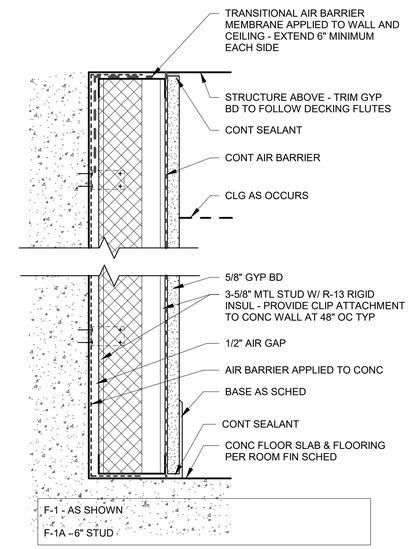

H16 F1 - GYP / STUD FURRING

SCALE: 3" = 1'-0"

0 1.5" 3" 6" 9"

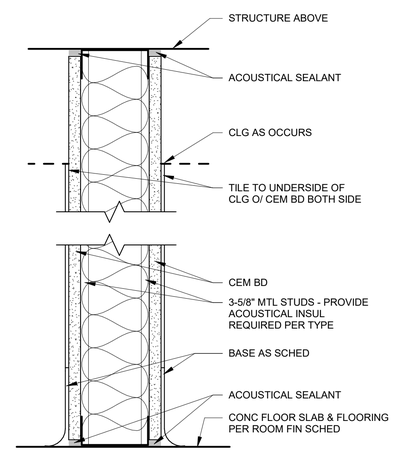

A11 P2 - GYP / STUD PARTITION

SCALE: 3" = 1'-0"

0 1.5" 3" 6" 9"

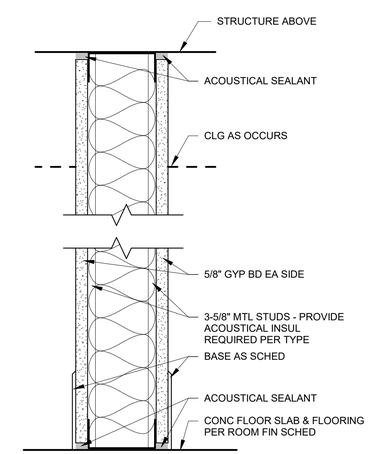

A16 P1 - GYP / STUD PARTITION

SCALE: 3" = 1'-0"

0 1.5" 3" 6" 9"

US Army Corps of Engineers ®

MARK	DESCRIPTION	DATE

File Path: Autodesk Docs://18329.01/3 - HIANG F-22 Plus-Up Projects/NMD20190687_ES_ARCH.rvt

Plot Date: 10/17/2025 3:37:13 PM

DESIGNED BY: J. VANN	ISSUE DATE: 15 OCTOBER 2025
DRAWN BY: K. PANANGANAN	SOLICITATION NO.: W912BA22F0002
CHECKED BY: J. VANN	CONTRACT NO.: W912BA19D0012
SUBMITTED BY: E. EBERT	
SIZE: ANSI D	

US ARMY CORPS OF ENGINEERS
HONOLULU DISTRICT
FORT SHAFTER, OAHU, HAWAII

RIM ARCHITECTS
55 MERCHANT STREET SUITE 1400,
HONOLULU, HI 96813

JOINT BASE PEARL HARBOR-HICKAM, OAHU, HAWAII
FY22 HAWAII AIR NATIONAL GUARD (HIANG) F-22 PLUS-UP

PARTITION TYPES

SHEET ID

A-401

REVISED FINAL SUBMITTAL

WALL SECTION GENERAL NOTES

1. REFER TO PARTITION TYPE A-401.

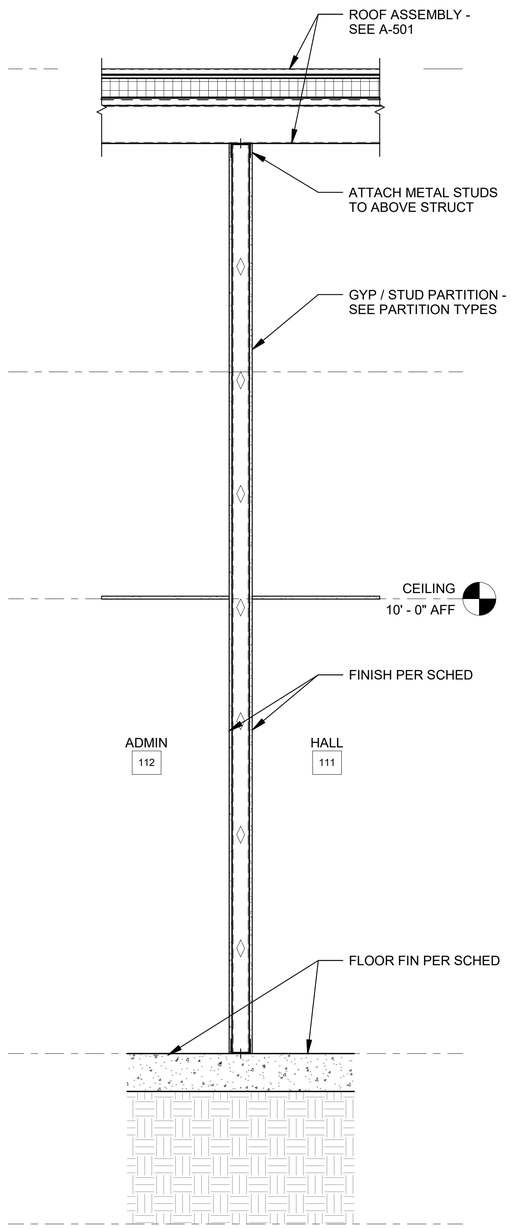

A5 WALL SECTION @ STUD PARTITION
SCALE: 3/4" = 1'-0"

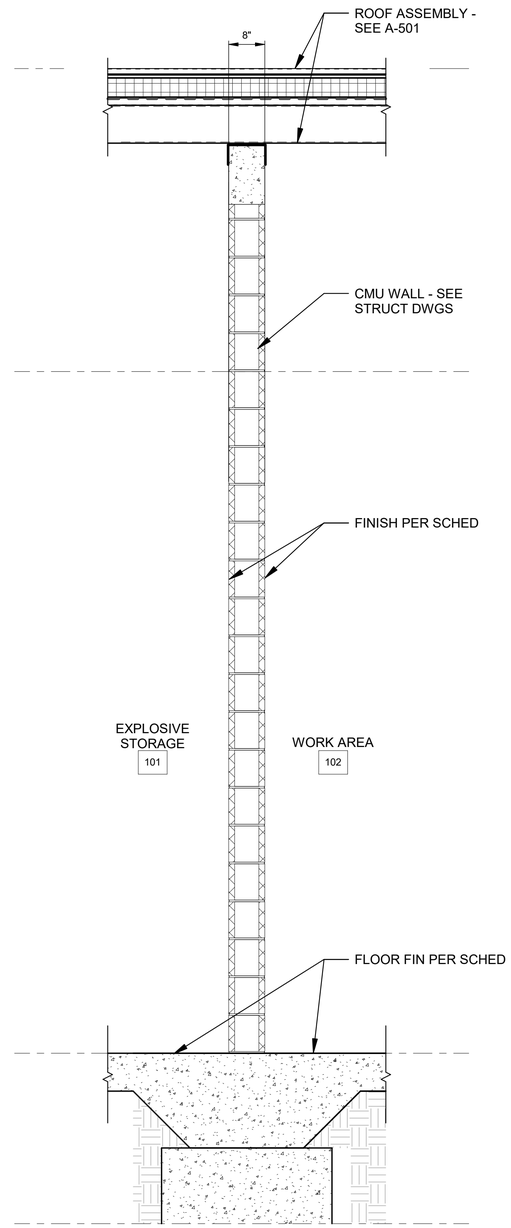

A10 WALL SECTION @ CMU
SCALE: 3/4" = 1'-0"

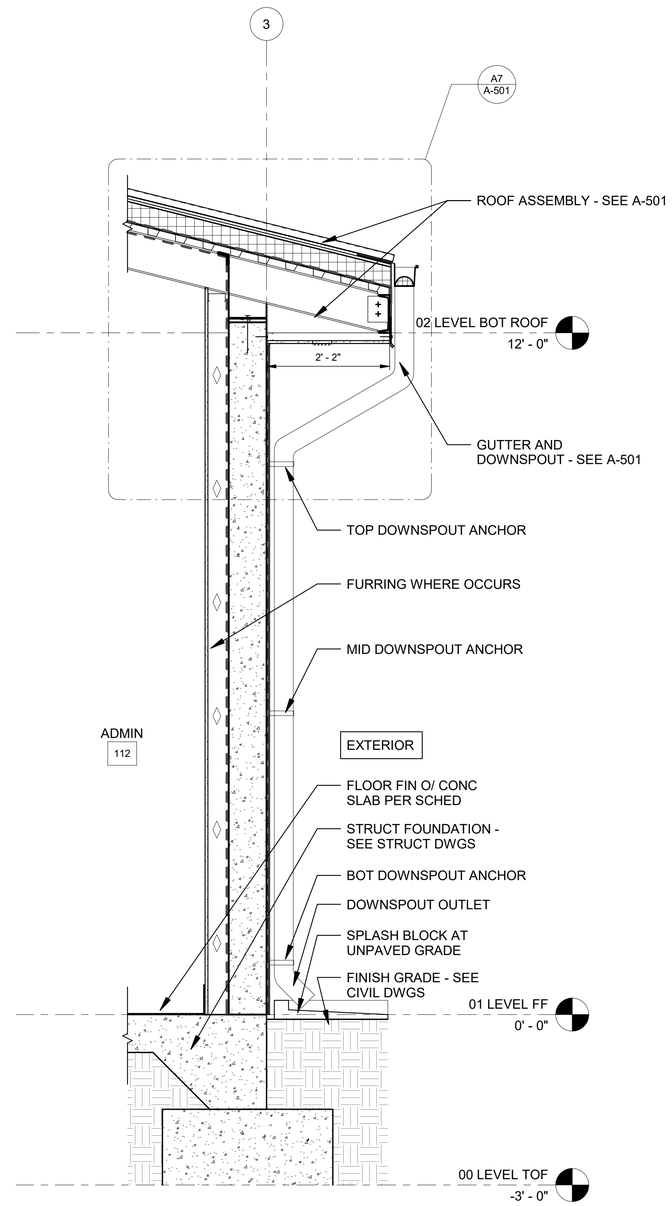

A15 WALL SECTION @ EXTR WALL
SCALE: 3/4" = 1'-0"

US Army Corps of Engineers ®

MARK	DESCRIPTION	DATE

ISSUE DATE: 15 OCTOBER 2025
SOLICITATION NO.: W912BA22P0002
CONTRACT NO.: W912BA15B0012

DESIGNED BY: J. VANN
DRAWN BY: K. PANANGANAN
REVIEWED BY: J. VANN
SUBMITTED BY: E. EBERT
SIZE: ANSI D

US ARMY CORPS OF ENGINEERS
HONOLULU DISTRICT
FORT SHAFTER, OAHU, HAWAII

RIM ARCHITECTS
55 MERCHANT STREET SUITE 1400,
HONOLULU, HI 96813

JOINT BASE PEARL HARBOR-HICKAM, OAHU, HAWAII
FY22 HAWAII AIR NATIONAL GUARD (HIANG) F-22 PLUS-UP

WALL SECTIONS

SHEET ID
A-402

File Path: Autodesk Docs://18329.013 - HIANG F-22 Plus-Up Projects/NMD20190687_ES_ARCH.rvt
Plot Date: 10/17/2025 3:37:14 PM

REVISED FINAL SUBMITTAL

KEYNOTES	
N02	PROVIDE PREFINISHED DOWNSPOUT
N32	EXPOSED CEILING ABOVE - REFER TO ROOM FINISH SCHED

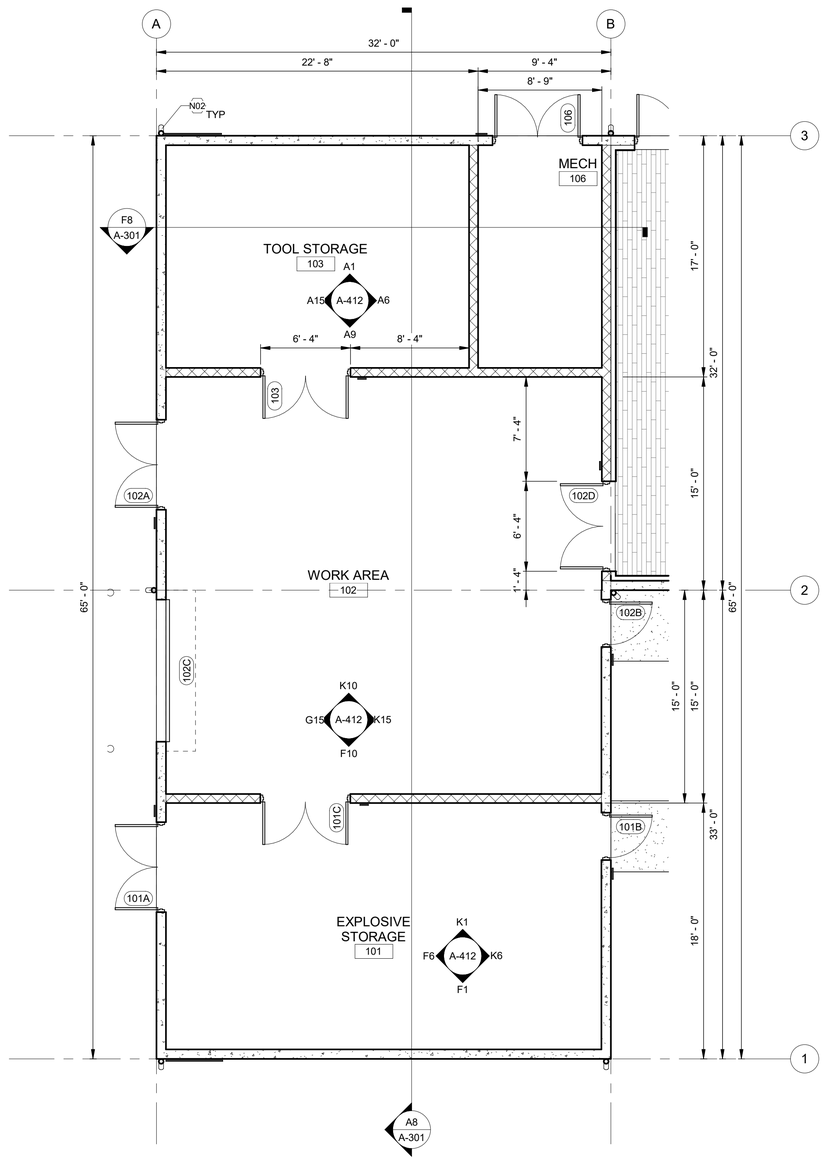

1 SECTOR A - ENLARGED PARTIAL FLOOR PLAN

SCALE: 3/16" = 1'-0"

0 2' 4' 8' 12'

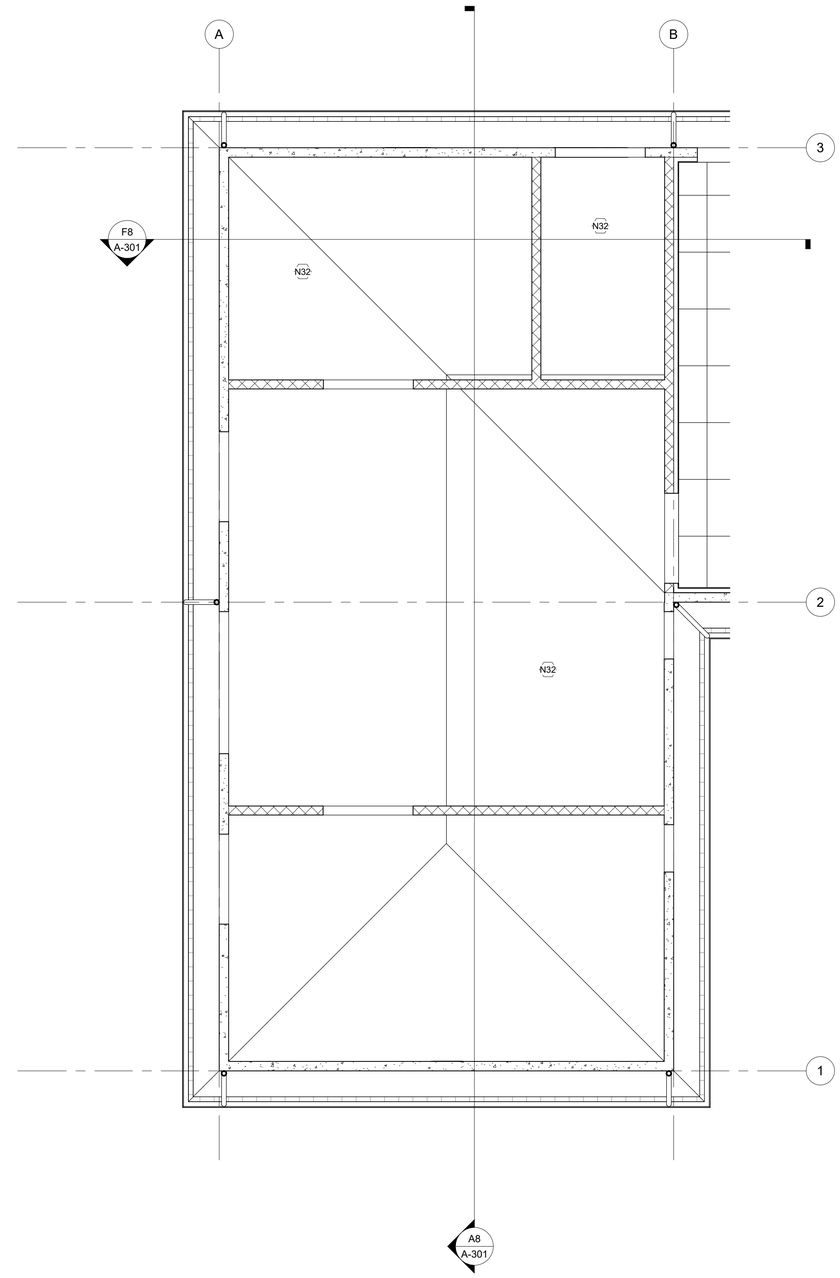

2 SECTOR A - ENLARGED PARTIAL REFLECTED CEILING PLAN

SCALE: 3/16" = 1'-0"

0 2' 4' 8' 12'

US Army Corps of Engineers ®

MARK	DESCRIPTION	DATE

ISSUE DATE: 15 OCTOBER 2025
SOLICITATION NO.: W912BA22F0002
CONTRACT NO.: W912BA19B0072

DESIGNED BY: J. VANN
DRAWN BY: K. PANANGANAN
CHECKED BY: J. VANN
SUBMITTED BY:
SIZE: ANSI D

US ARMY CORPS OF ENGINEERS
HONOLULU DISTRICT
FORT SHAFTER, OAHU, HAWAII

RIM ARCHITECTS
55 MERCHANT STREET SUITE 1400,
HONOLULU, HI 96813

JOINT BASE PEARL HARBOR-HICKAM, OAHU, HAWAII
FY22 HAWAII AIR NATIONAL GUARD (HIANG) F-22 PLUS-UP

SECTOR A - ENLARGED PLAN AND REFLECTED CEILING PLAN

SHEET ID

A-411

Plot Date: 10/17/2025 3:37:14 PM File Path: Autodesk Docs://18329.013 - HIANG F-22 Plus-Up Projects/NMD20190687_ES_ARCH.rvt

REVISED FINAL SUBMITTAL

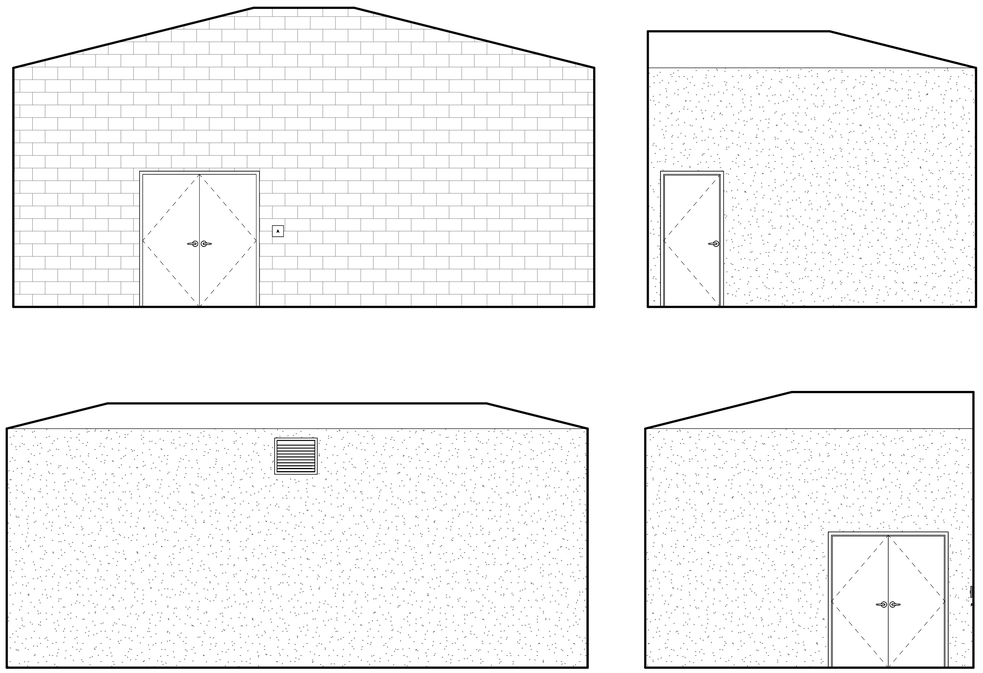

F1 101 INT ELEVATION
SCALE: 1/4" = 1'-0"

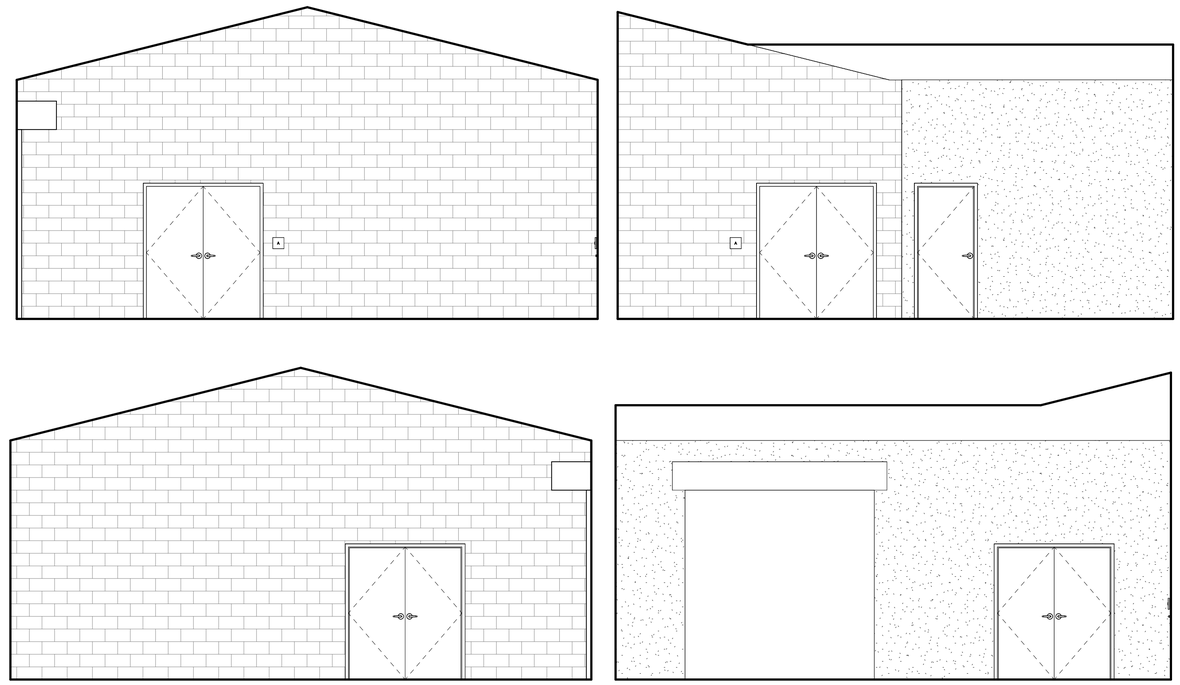

F10 102 INT ELEVATION
SCALE: 1/4" = 1'-0"

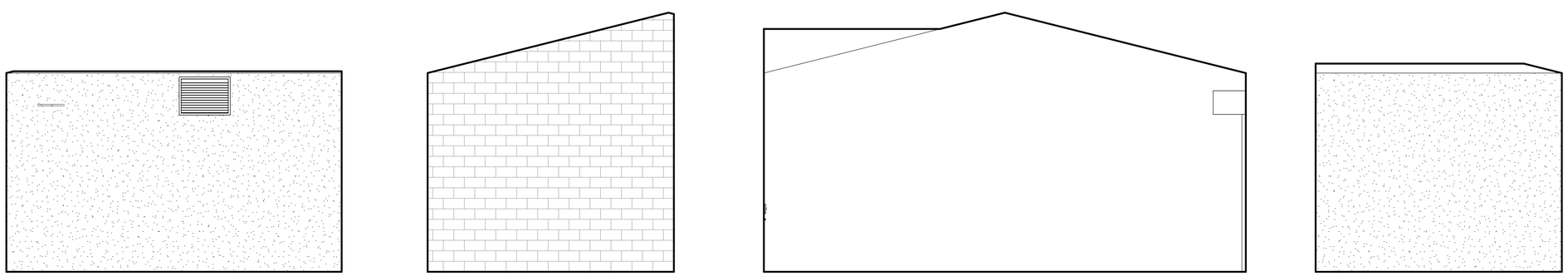

A1 TOOL STORAGE 103 - INTERIOR ELEVATIONS
SCALE: 1/4" = 1'-0"

US Army Corps of Engineers ®

MARK	DESCRIPTION	DATE

DESIGNED BY: J. VANN
DRAWN BY: K. PANAGANAN
CHECKED BY: J. VANN
SUBMITTED BY: E. EBERT
SIZE: ANSI D

ISSUE DATE: 15 OCTOBER 2025
SOLICITATION NO.: W912BA22F0002
CONTRACT NO.: W912BA15B0072

US ARMY CORPS OF ENGINEERS
HONOLULU DISTRICT
FORT SHAFTER, OAHU, HAWAII

RIM ARCHITECTS
55 MERCHANT STREET SUITE 1400,
HONOLULU, HI 96813

JOINT BASE PEARL HARBOR-HICKAM, OAHU, HAWAII
FY22 HAWAII AIR NATIONAL GUARD (HIANG) F-22 PLUS-UP

SECTOR A - INTERIOR ELEVATIONS

SHEET ID
A-412

REVISED FINAL SUBMITTAL

Plot Date: 10/17/2025 3:37:15 PM File Path: Autodesk Docs://B3029.013 - HIANG F-22 Plus-Up Projects/NMD20596F_ES_ARCH.rvt

KEYNOTES	
N02	PROVIDE PREFINISHED DOWNSPOUT
N30	PROVIDE GYP BD CEILING - SUSPENDED OR FRAMED
N31	PROVIDE ACOUSTIC PANEL CEILING
N32	EXPOSED CEILING ABOVE - REFER TO ROOM FINISH SCHED
N80	MECH EQPT - REFER TO MECH DWGS
N82	LIGHT FIXTURE - REFER TO ELEC DWGS
N84	PLBG EQPT - REFER TO PLBG DWGS

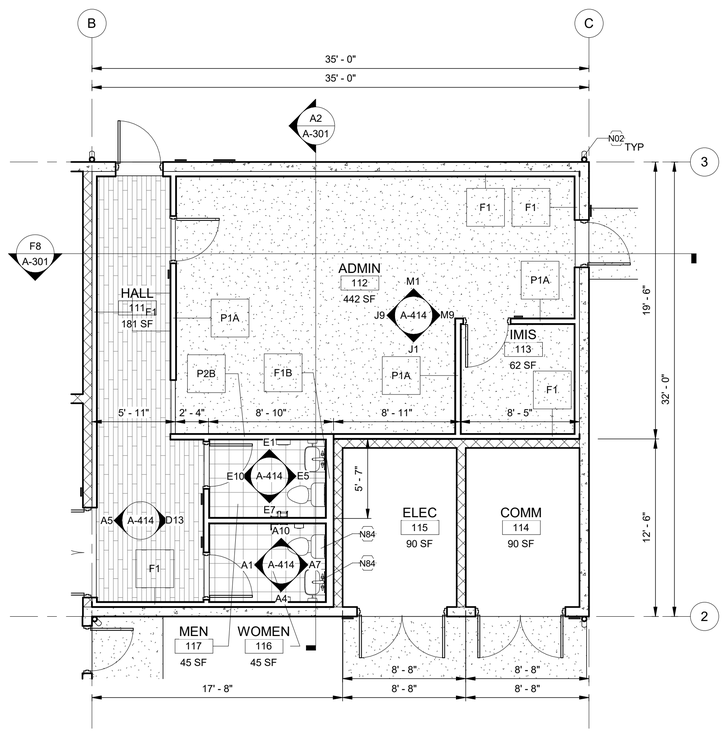

A4 SECTOR B - ENLARGED PARTIAL FLOOR PLAN

SCALE: 3/16" = 1'-0"

0 2' 4' 8' 12'

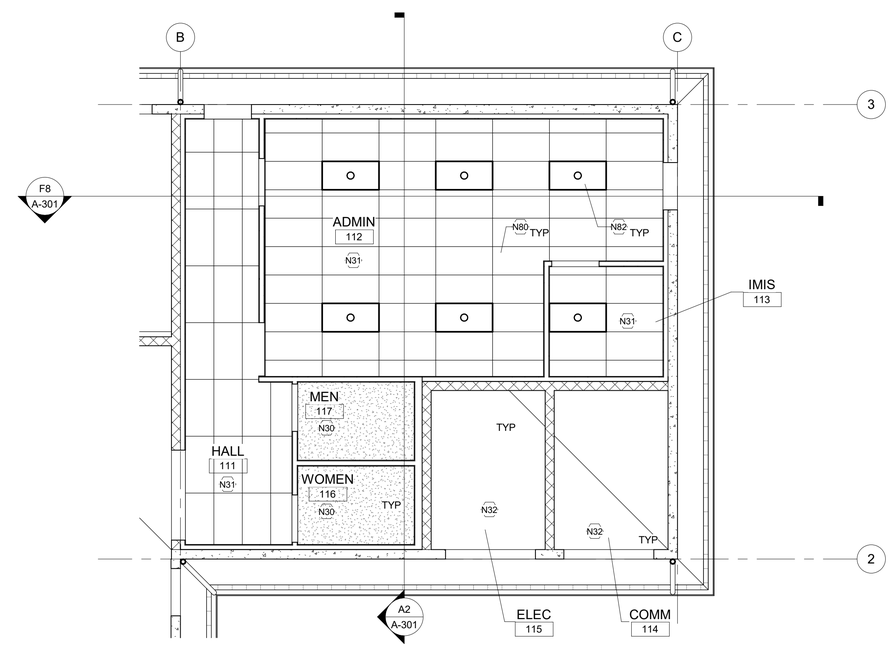

A12 SECTOR B - ENLARGED PARTIAL REFLECTED CEILING PLAN

SCALE: 3/16" = 1'-0"

0 2' 4' 8' 12'

US Army Corps of Engineers ®

MARK	DESCRIPTION	DATE

ISSUE DATE: 15 OCTOBER 2025
SOLICITATION NO.: W912BA22F0002
CONTRACT NO.: W912BA19D0072

DESIGNED BY: Designer
DRAWN BY: Author
CHECKED BY: Checker
SUBMITTED BY:
SIZE: ANSI D

US ARMY CORPS OF ENGINEERS
HONOLULU DISTRICT
FORT SHAFTER, OAHU, HAWAII

RIM ARCHITECTS
55 MERCHANT STREET SUITE 1400,
HONOLULU, HI 96813

JOINT BASE PEARL HARBOR-HICKAM, OAHU, HAWAII
FY22 HAWAI'AIR NATIONAL GUARD (HIANG) F-22 PLUS-UP

SECTOR B - ENLARGED PLAN AND REFLECTED CEILING PLAN

SHEET ID
A-413

Plot Date: 10/17/2025 3:37:16 PM File Path: Autodesk Docs://18329.013 - HIANG F-22 Plus-Up Projects/NMD20596F_ES_ARCH.rvt

REVISED FINAL SUBMITTAL

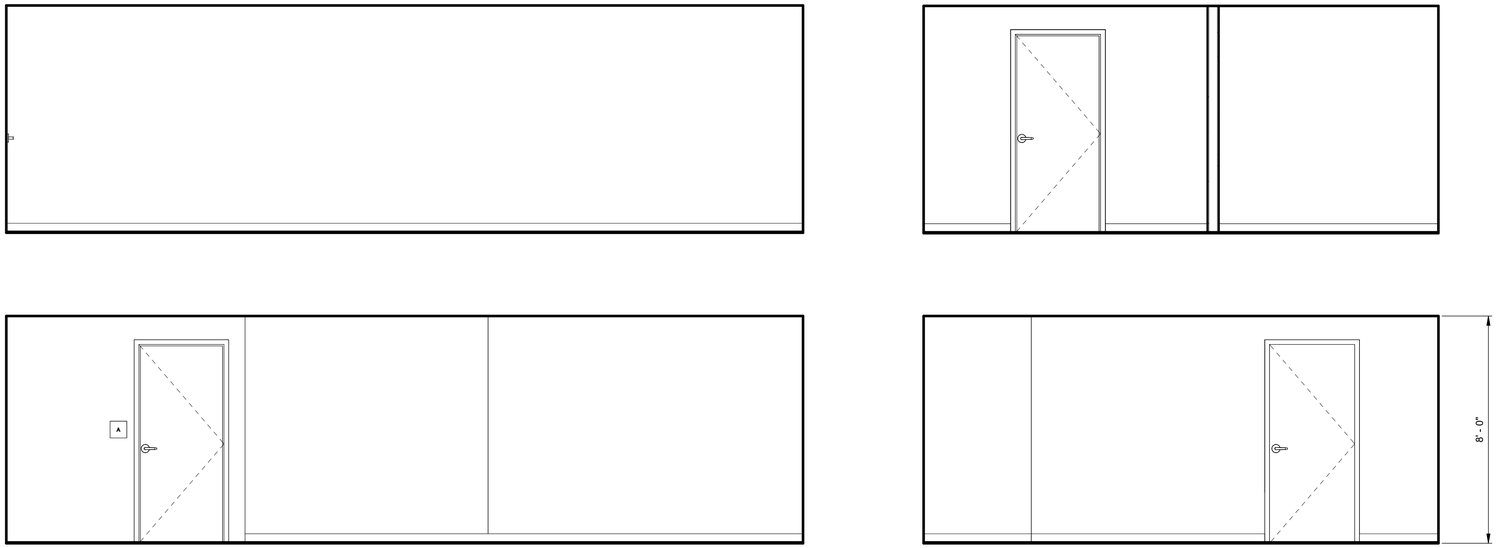

J1 112 INT ELEVATIONS C

SCALE: 3/8" = 1'-0"

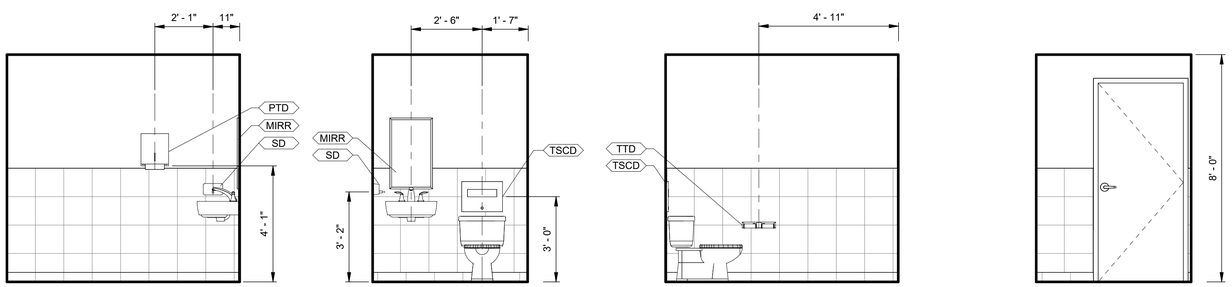

E1 MEN'S 117 - INTERIOR ELEVATIONS

SCALE: 3/8" = 1'-0"

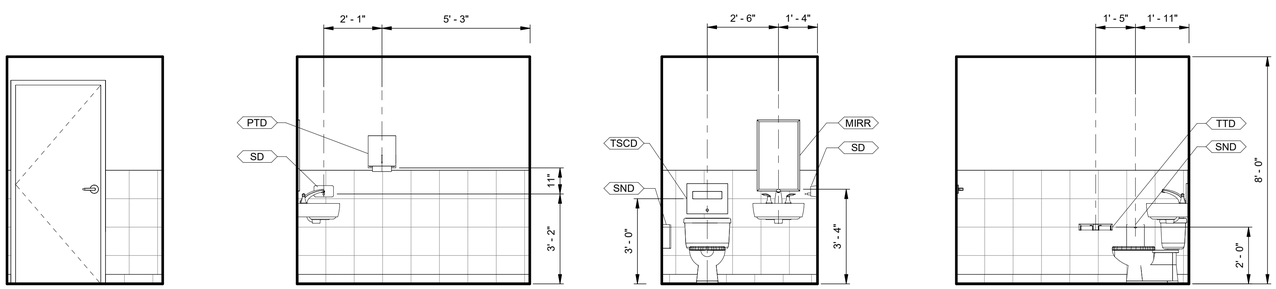

A1 WOMEN'S 116 - INTERIOR ELEVATIONS

SCALE: 3/8" = 1'-0"

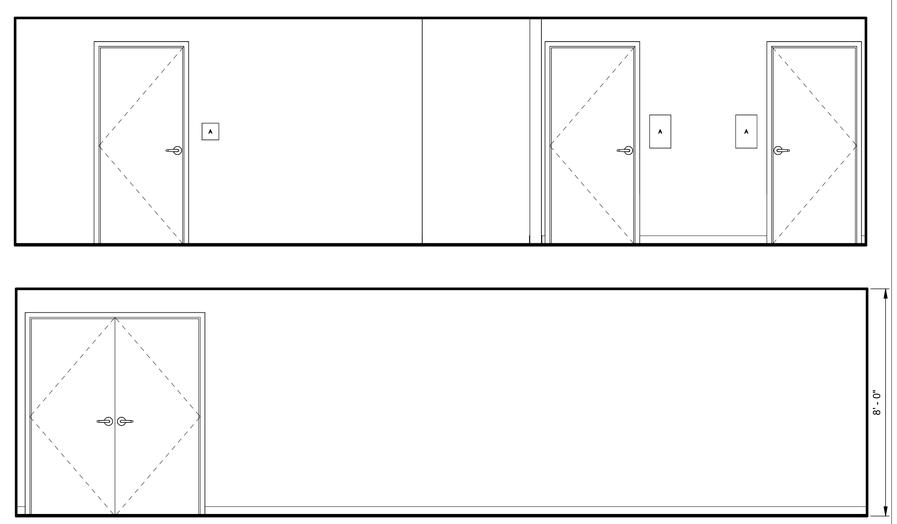

A5 111 INT ELEVATIONS

SCALE: 3/8" = 1'-0"

US Army Corps of Engineers ®

MARK	DESCRIPTION	DATE

ISSUE DATE: 15 OCTOBER 2025
SOLICITATION NO.: W912BA22F0002
CONTRACT NO.: W912BA15D0072

DESIGNED BY: J. VANN
DRAWN BY: K. PANANGANAN
CHECKED BY: J. VANN
SUBMITTED BY: E. EBERT
SIZE: ANSI D

US ARMY CORPS OF ENGINEERS
HONOLULU DISTRICT
FORT SHAFTER, OAHU, HAWAII

RIM ARCHITECTS
55 MERCHANT STREET SUITE 1400,
HONOLULU, HI 96813

JOINT BASE PEARL HARBOR-HICKAM, OAHU, HAWAII
FY22 HAWAII AIR NATIONAL GUARD (HANG) F-22 PLUS-UP

SECTOR B - INTERIOR ELEVATIONS

SHEET ID

A-414

REVISED FINAL SUBMITTAL

Plot Date: 10/17/2025 3:37:17 PM File Path: Autodesk Docs://B3029.013 - HANG F-22 Plus-Up Projects/NMD2206987_ES_ARCH.rvt

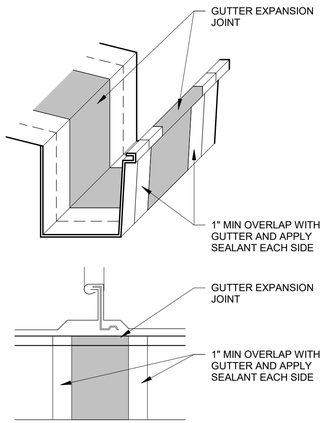

D3 GUTTER EXPANSION JOINT
SCALE: 3" = 1'-0"

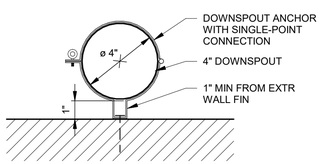

A3 DOWNSPOUT ANCHOR
SCALE: 3" = 1'-0"

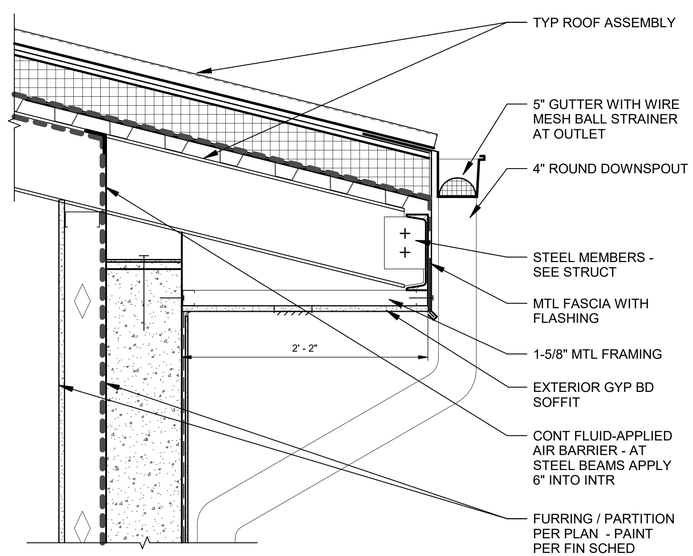

A7 EAVE SOFFIT
SCALE: 1 1/2" = 1'-0"
0 0.25' 0.5' 1' 1.5'

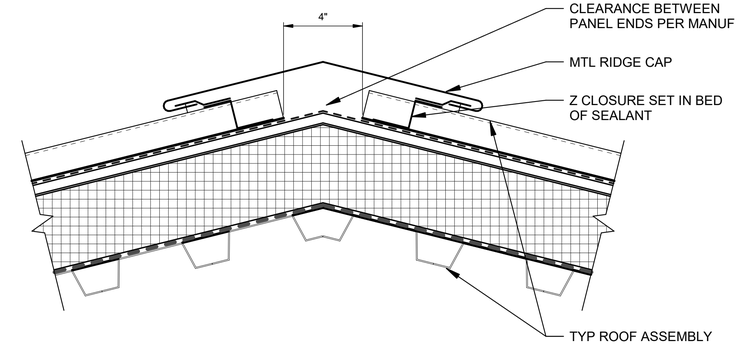

E14 RIDGE DETAIL
SCALE: 3" = 1'-0"
0 1.5" 3" 6" 9"

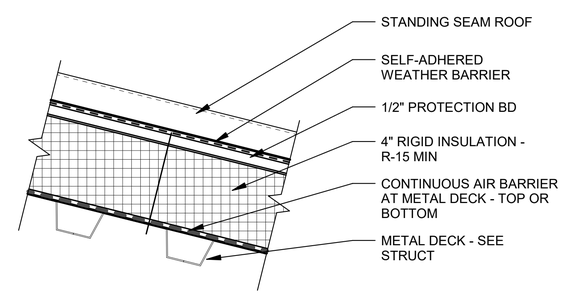

A14 TYP ROOF ASSEMBLY
SCALE: 3" = 1'-0"
0 1.5" 3" 6" 9"

US Army Corps of Engineers ®

MARK	DESCRIPTION	DATE

ISSUE DATE: 15 OCTOBER 2025
SOLICITATION NO.: W912BA22F0002
CONTRACT NO.: W912BA15B0072

DESIGNED BY: J. VANN
DRAWN BY: K. PANANGANAN
REVIEWED BY: J. VANN
SUBMITTED BY:
SIZE: ANSI D

US ARMY CORPS OF ENGINEERS
HONOLULU DISTRICT
FORT SHAFTER, OAHU, HAWAII

RIM ARCHITECTS
55 MERCHANT STREET SUITE 1400,
HONOLULU, HI 96813

JOINT BASE PEARL HARBOR-HICKAM, OAHU, HAWAII
FY'22 HAWAII AIR NATIONAL GUARD (HIANG) F-22 PLUS-UP

ROOF DETAILS

SHEET ID
A-501

REVISED FINAL SUBMITTAL

Plot Date: 10/17/2025 3:37:17 PM File Path: Autodesk Docs://18329.013 - HIANG F-22 Plus-Up Projects/NMD20598_ES_ARCH.rvt

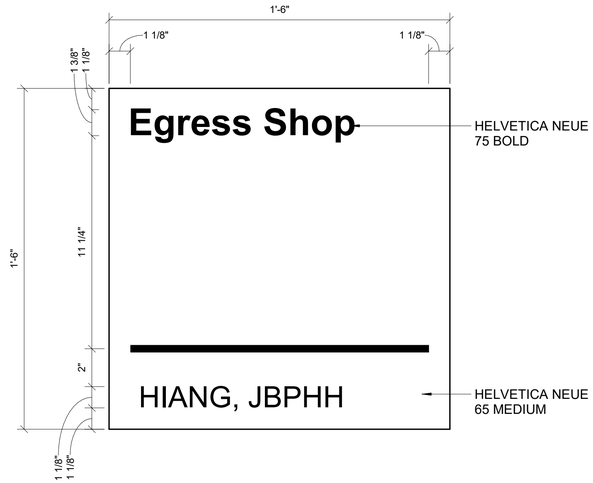

TYPE M
BUILDING IDENTIFICATION

J4 SIGN TYPE M
SCALE: 3" = 1'-0"

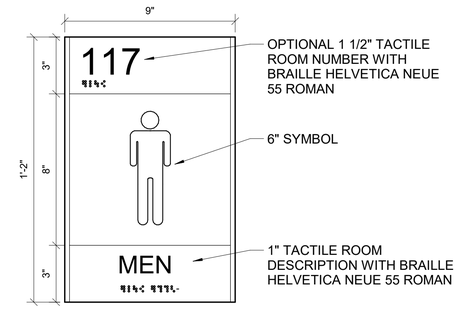

TYPE RR.M
RESTROOM ID

K10 SIGN TYPE RR.M
SCALE: 3" = 1'-0"

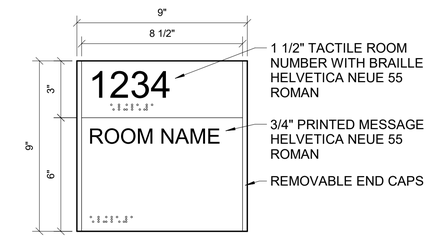

TYPE A
ROOM IDENTIFICATION

K15 SIGN TYPE A
SCALE: 3" = 1'-0"

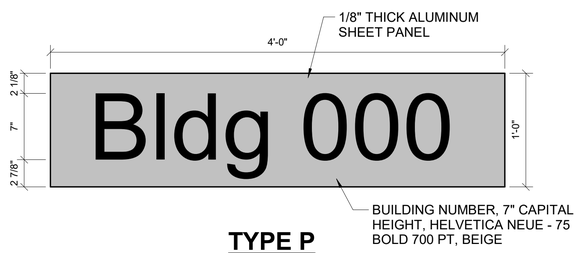

TYPE P
BUILDING NO.

F4 SIGN TYPE P
SCALE: 1 1/2" = 1'-0"

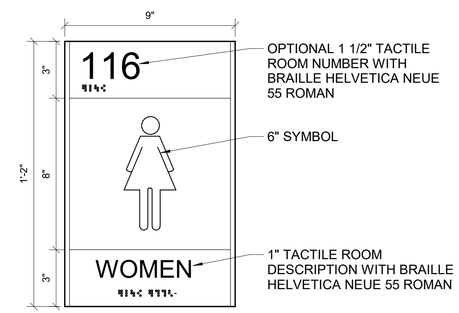

TYPE RR.W
RESTROOM ID

F10 SIGN TYPE RR.W
SCALE: 3" = 1'-0"

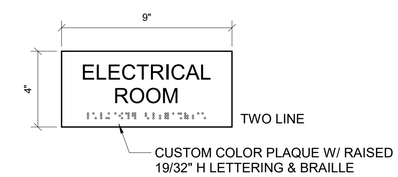

TYPE C
ROOM ID

F15 SIGN TYPE C
SCALE: 3" = 1'-0"

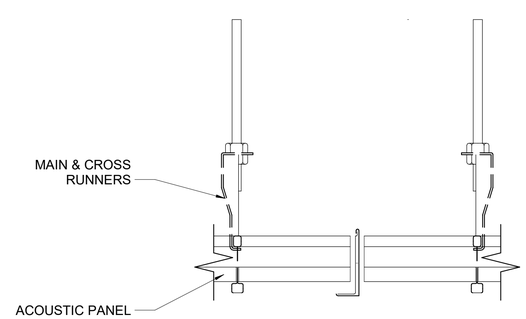

A10 ACOUSTIC PANEL CEILING
SCALE: 3" = 1'-0"

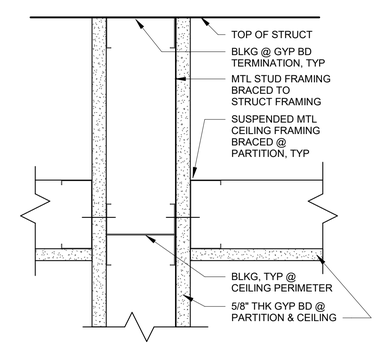

A15 FRAMED GYP BD CEILING
SCALE: 3" = 1'-0"

US Army Corps of Engineers ®

MARK	DESCRIPTION	DATE

ISSUE DATE: 15 OCTOBER 2025
SOLICITATION NO.: W912BA22F0002
CONTRACT NO.: W912BA19B0012

DESIGNED BY: J. VANN
DRAWN BY: K. PANANGANAN
CHECKED BY: J. VANN
SUBMITTED BY: E. EBERT
SIZE: ANSI D

US ARMY CORPS OF ENGINEERS
HONOLULU DISTRICT
FORT SHAFTER, OAHU, HAWAII

RIM ARCHITECTS
55 MERCHANT STREET SUITE 1400,
HONOLULU, HI 96813

JOINT BASE PEARL HARBOR-HICKAM, OAHU, HAWAII
FY22 HAWAI'AIR NATIONAL GUARD (HIANG) F-22 PLUS-UP

CEILING & SIGNAGE DETAILS

SHEET ID
A-502

File Path: Autodesk Docs://18329.013 - HIANG F-22 Plus-Up Projects/NMD220598T_ES_ARCH.rvt
Plot Date: 10/17/2025 3:37:17 PM

REVISED FINAL SUBMITTAL

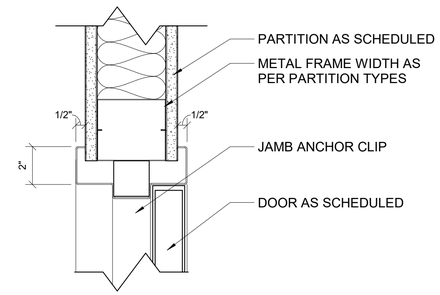

L5 INTR DOOR HEADER

SCALE: 3" = 1'-0"

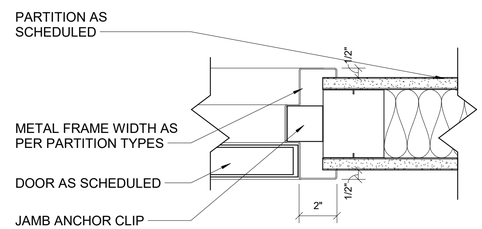

H5 INTR DOOR JAMB

SCALE: 3" = 1'-0"

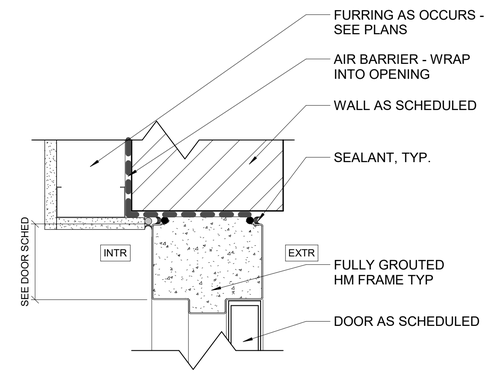

H10 EXTERIOR DOOR HEADER - B

SCALE: 3" = 1'-0"

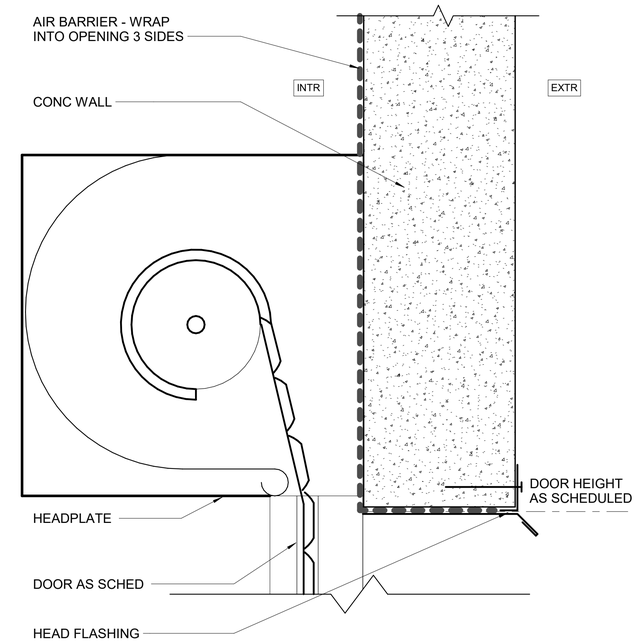

H15 OH DOOR HEADER

SCALE: 3" = 1'-0"

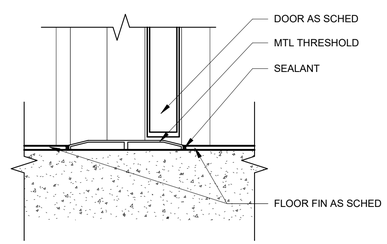

D5 DOOR THRESHOLD - B

SCALE: 3" = 1'-0"

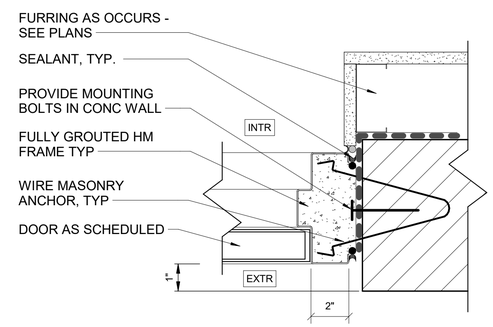

D10 EXTERIOR DOOR JAMB - B

SCALE: 3" = 1'-0"

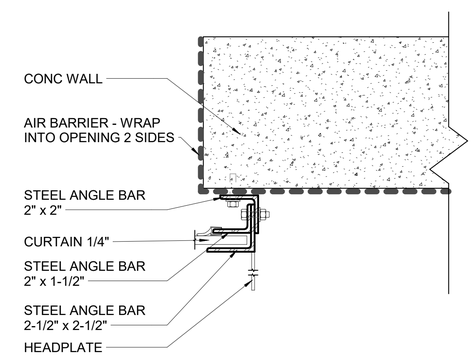

D15 OH DOOR JAMB

SCALE: 3" = 1'-0"

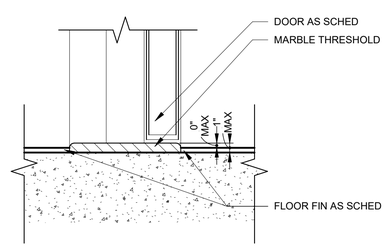

A5 RESTROOM DOOR THRESHOLD

SCALE: 3" = 1'-0"

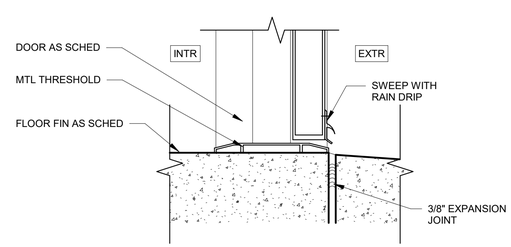

A10 EXTERIOR DOOR THRESHOLD

SCALE: 3" = 1'-0"

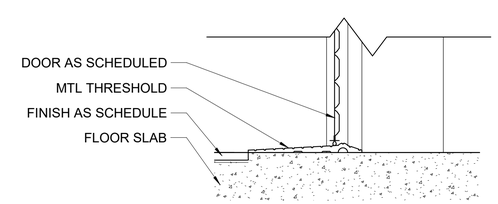

A15 OH DOOR THRESHOLD

SCALE: 3" = 1'-0"

US Army Corps of Engineers ®

MARK	DESCRIPTION	DATE

DESIGNED BY: J. VANN
DRAWN BY: K. PANANGANAN
CHECKED BY: J. VANN
SUBMITTED BY: E. EBERT
SIZE: ANSI D
ISSUE DATE: 15 OCTOBER 2025
SOLICITATION NO.: W912BA22F0002
CONTRACT NO.:

US ARMY CORPS OF ENGINEERS
HONOLULU DISTRICT
FORT SHAFTER, OAHU, HAWAII

RIM ARCHITECTS
55 MERCHANT STREET SUITE 1400,
HONOLULU, HI 96813
W912BA19D0012

JOINT BASE PEARL HARBOR-HICKAM, OAHU, HAWAII
FY22 HAWAII AIR NATIONAL GUARD (HIANG) F-22 PLUS-UP
ADD EGRESS SHOP

DOOR DETAILS

SHEET ID
A-503

Plot Date: 10/17/2025 3:37:18 PM File Path: Autodesk Docs://18320.01/3 - HIANG F-22 Plus-Up Projects/NMD220568F_ES_ARCH.rvt

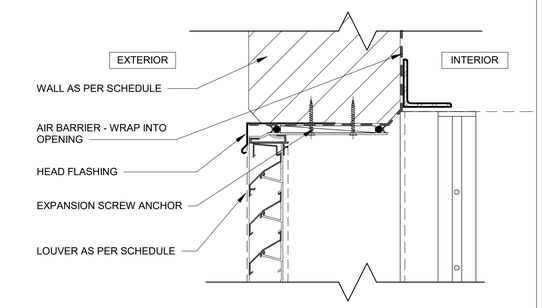

L16 LOUVER HEAD

SCALE: 3" = 1'-0"

0 1.5" 3" 6" 9"

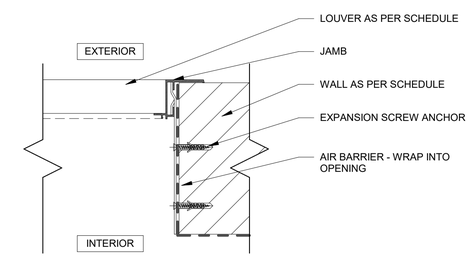

G16 LOUVER JAMB

SCALE: 3" = 1'-0"

0 1.5" 3" 6" 9"

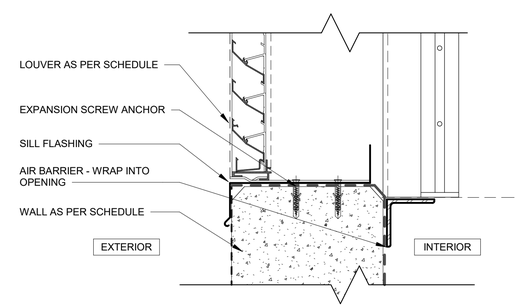

B16 LOUVER SILL

SCALE: 3" = 1'-0"

0 1.5" 3" 6" 9"

US Army Corps of Engineers ®

MARK	DESCRIPTION	DATE

ISSUE DATE: 15 OCTOBER 2025
SOLICITATION NO.: W912BA22F0002
CONTRACT NO.: W912BA15B0012

DESIGNED BY: J. VANN
DRAWN BY: K. PANANGANAN
CHECKED BY: J. VANN
SUBMITTED BY: E. EBERT
SIZE: ANSI D

US ARMY CORPS OF ENGINEERS
HONOLULU DISTRICT
FORT SHAFTER, OAHU, HAWAII

RIM ARCHITECTS
55 MERCHANT STREET SUITE 1400,
HONOLULU, HI 96813

JOINT BASE PEARL HARBOR-HICKAM, OAHU, HAWAII
FY22 HAWAII AIR NATIONAL GUARD (HIANG) F-22 PLUS-UP

LOUVER DETAILS

SHEET ID

A-504

Plot Date: 10/17/2025 3:37:18 PM File Path: Autodesk Docs://18329.013 - HIANG F-22 Plus-Up Projects/NMD20596F_ES_ARCH.rvt

REVISED FINAL SUBMITTAL

LOUVER SCHEDULE

COUNT	LOUVER NO.	Height	Width	MATERIAL	DETAILS HEAD	DETAILS JAMB	DETAILS SILL	HEAD HEIGHT	REMARKS
1	L1	2' - 2"	3' - 0"	ANOD ALUM	L16/A-504	G16/A-504	L16/A-504	12' - 3"	
1	L2	1' - 4"	5' - 0"	ANOD ALUM	L16/A-504	G16/A-504	L16/A-504	11' - 11 1/2"	
1	L3	1' - 0"	1' - 6"	ANOD ALUM	L16/A-504	G16/A-504	L16/A-504	12' - 0"	
1	L4	1' - 0"	1' - 0"	ANOD ALUM	L16/A-504	G16/A-504	L16/A-504	11' - 6"	
1	L5	1' - 8"	2' - 0"	ANOD ALUM	L16/A-504	G16/A-504	L16/A-504	12' - 0"	

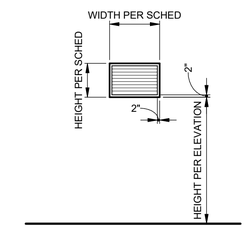

TYPE A

H18 LOUVER TYPES
SCALE: NTS

DOOR SCHEDULE

DOOR NO.	DOOR TYPE	DOOR FINISH	DOOR SIZE WIDTH	DOOR SIZE HEIGHT	DOOR SIZE THICKNESS	UNDER CUT	FIRE RATING (MINUTES)	FRAME TYPE	FRAME MATERIAL	FRAME FINISH	FRAME DETAILS HEAD	FRAME DETAILS JAMB	FRAME DETAILS SILL	HARDWARE
101A	C	PT-2	6' - 0"	7' - 0"	0' - 2"	0'-1"	NR	B	HM	PT-2	H10/A-503	D10/A-503	A10/A-503	HW-3
101B	B	PT-2	3' - 0"	7' - 0"	0' - 2"	0'-1"	NR	B	HM	PT-2	H10/A-503	D10/A-503	A10/A-503	HW-1
101C	C	PT-2	6' - 0"	7' - 0"	0' - 2"	0'-1"	NR	B	HM	PT-2	L5/A-503	H5/A-503	D5/A-503	HW-12
102A	C	PT-2	6' - 0"	7' - 0"	0' - 2"	0'-1"	NR	B	HM	PT-2	H10/A-503	D10/A-503	A10/A-503	HW-3
102B	B	PT-2	3' - 0"	7' - 0"	0' - 2"	0'-1"	NR	B	HM	PT-2	H10/A-503	D10/A-503	A10/A-503	HW-1
102C	A	PT-2	10' - 0"	10' - 0"	0' - 2"	-	NR	A	HM	PT-2	A15/A-503	D15/A-503	H15/A-503	HW-4
102D	C	PT-2	6' - 0"	7' - 0"	0' - 2"	0'-1"	90	B	HM	PT-2	L5/A-503	H5/A-503	D5/A-503	HW-12
103	C	PT-2	6' - 0"	7' - 0"	0' - 2"	0'-1"	90	B	HM	PT-2	L5/A-503	H5/A-503	D5/A-503	HW-12
106	D	PT-2	6' - 0"	7' - 0"	0' - 2"	0'-1"	NR	B	HM	PT-2	H10/A-503	D10/A-503	A10/A-503	HW-2
107	C	PT-2	6' - 0"	7' - 0"	0' - 2"	0'-1"	NR	B	HM	PT-2	H10/A-503	D10/A-503	A10/A-503	HW-2
108	C	PT-2	6' - 0"	7' - 0"	0' - 2"	0'-1"	NR	B	HM	PT-2	H10/A-503	D10/A-503	A10/A-503	HW-2
110	B	PT-2	3' - 0"	7' - 0"	0' - 2"	0'-1"	NR	B	HM	PT-2	L5/A-503	H5/A-503	A5/A-503	HW-11
111	B	PT-2	3' - 0"	7' - 0"	0' - 2"	0'-1"	NR	B	HM	PT-2	L5/A-503	H5/A-503	A5/A-503	HW-11
111A	B	PT-2	3' - 0"	7' - 0"	0' - 2"	0'-1"	NR	B	HM	PT-2	H10/A-503	D10/A-503	A10/A-503	HW-1
112A	B	PT-2	3' - 0"	7' - 0"	0' - 2"	0'-1"	NR	B	HM	PT-2	H10/A-503	D10/A-503	A10/A-503	HW-1
112B	B	PT-2	3' - 0"	7' - 0"	0' - 2"	0'-1"	NR	B	HM	PT-2	L5/A-503	H5/A-503	D5/A-503	HW-11
113	B	PT-2	3' - 0"	7' - 0"	0' - 2"	0'-1"	NR	B	HM	PT-2	L5/A-503	H5/A-503	D5/A-503	HW-11

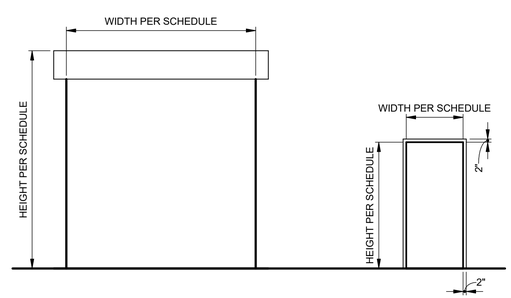

TYPE A TYPE B

A6 FRAME TYPES
SCALE: 1/4" = 1'-0"

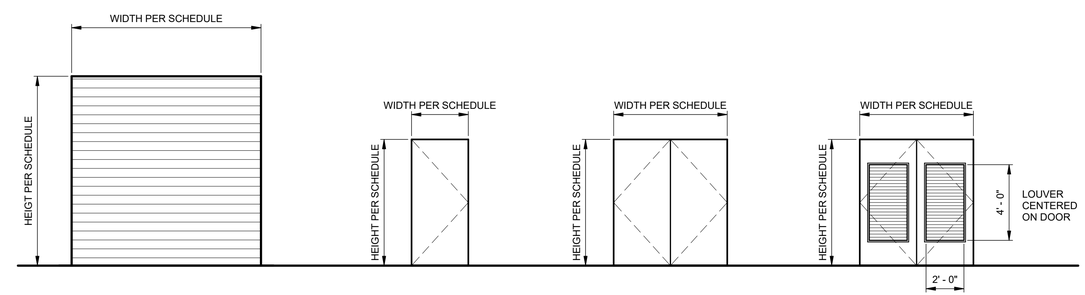

TYPE A TYPE B TYPE C TYPE D

A11 DOOR TYPES
SCALE: NTS

US Army Corps of Engineers ®

MARK	DESCRIPTION	DATE

ISSUE DATE: 15 OCTOBER 2025
SOLICITATION NO.: W912BA22F0002
CONTRACT NO.: W912BA15B0012

DESIGNED BY: J. VANN
DRAWN BY: K. PANANGANAN
CHECKED BY: J. VANN
SUBMITTED BY: E. EBERT
SIZE: ANSI D

US ARMY CORPS OF ENGINEERS
HONOLULU DISTRICT
FORT SHAFTER, OAHU, HAWAII

RIM ARCHITECTS
55 MERCHANT STREET SUITE 1400,
HONOLULU, HI 96813

JOINT BASE PEARL HARBOR-HICKAM, OAHU, HAWAII
FY'22 HAWAII AIR NATIONAL GUARD (HIANG) F-22 PLUS-UP

DOOR AND LOUVER SCHEDULES

SHEET ID
A-601

Plot Date: 10/17/2025 3:37:19 PM File Path: Autodesk Docs://18329.013 - HIANG F-22 Plus-Up Projects/NMD20596F_ES_ARCH.rvt

REVISED FINAL SUBMITTAL

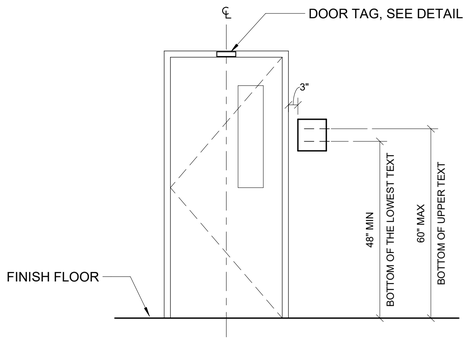

K1 SIGNAGE MOUNTING TYPE 1
SCALE: 1/2" = 1'-0"
0 1.5" 3" 6" 9"

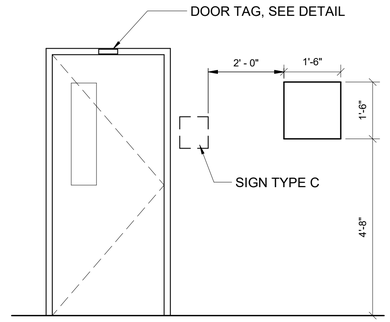

K6 SIGNAGE MOUNTING TYPE 3
SCALE: 1/2" = 1'-0"
0 1.5" 3" 6" 9"

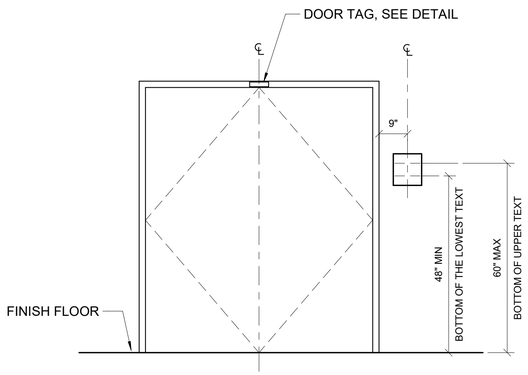

E1 SIGNAGE MOUNTING TYPE 2
SCALE: 1/2" = 1'-0"
0 1.5" 3" 6" 9"

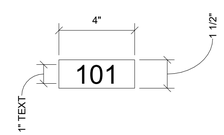

E7 DOOR TAG
SCALE: 3" = 1'-0"
0 1.5" 3" 6" 9"

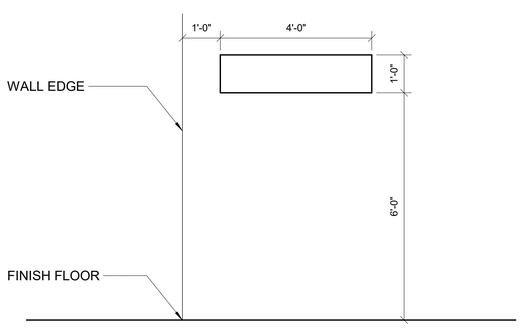

A1 SIGNAGE MOUNTING TYPE 4
SCALE: 1/2" = 1'-0"
0 1.5" 3" 6" 9"

SIGNAGE SCHEDULE

SIGN NO.	RM NO.	RM NAME	SIGN TYPE	MTG TYPE	SIGN TEXT	REMARKS	COUNT
101-1	101	EXPLOSIVE STORAGE	C	TYPE 1	EXPLOSIVE STORAGE		1
101-2	101	EXPLOSIVE STORAGE	C	TYPE 2	EXPLOSIVE STORAGE		1
101-3			P	TYPE 4	BLDG 000		1
102-1	102	WORK AREA	C	TYPE 1	WORK AREA		1
102-2	102	WORK AREA	C	TYPE 2	WORK AREA		1
102-3	102	WORK AREA	A	TYPE 2	102 WORK AREA		1
103-1	103	TOOL STORAGE	A	TYPE 2	103 TOOL STORAGE		1
103-2			P	TYPE 4	BLDG 000		1
106-1	106	MECH	C	TYPE 2	MECHANICAL ROOM		1
111-1	112	ADMIN	C	TYPE 1	ADMIN		1
111-2	111	HALL	A	TYPE 2	111 HALL		1
111-3			M	TYPE 3		SEE SIGN TYPE FOR SIGN TEXT	1
112-1	112	ADMIN	C	TYPE 1	ADMIN		1
112-2	112	ADMIN	A	TYPE 1	112 ADMIN		1
113-1	113	IMIS	A	TYPE 1	IMIS		1
114-1	114	COMM	C	TYPE 2	COMMUNICATIONS ROOM		1
115-1			C	TYPE 2	ELECTRICAL ROOM		1
116-1	116	WOMEN	RR.W	TYPE 1		SEE SIGN TYPE FOR SIGN TEXT	1
117-1	117	MEN	RR.M	TYPE 1		SEE SIGN TYPE FOR SIGN TEXT	1

MATERIAL LEGEND

MARK	MATERIAL	PRODUCT DESCRIPTION
ACP-1	ACOUSTICAL CEILING PANEL SYSTEM	24" X 48" EDGE: SQUARE, COLOR: WHITE, GRID: EXPOSED TEE SYSTEME, COLOR: WHITE
CONC	SEALED CONCRETE	N/A
CPT-1	CARPET TILE	9" X 36", TUFTED, MULTI-LEVEL PATTERN LOOP, ECOWORX TILE BACKING
CT-1	CERAMIC GLAZED PORCELAIN THROUGH-BODY WALL TILE	6" X 6"
CT-2	CERAMIC GLAZED PORCELAIN THROUGH-BODY FLOOR TILE	12" X 12" MATTE
CT-3	CERAMIC GLAZED PORCELAIN THROUGH-BODY TILE WALL BASE	6" X 12" CERAMIC TILE COVE BASE
GYP BD	PAINTED GYPSUM BOARD CEILING	SEMI-GLOSS
PT-1	WALL PAINT	SEMI-GLOSS
PT-2	DOOR PAINT	SEMI-GLOSS
PTX-1	EXTERIOR ELASTOMERIC COATING	SEE SWATCH
PTX-2	EXTERIOR ELASTOMERIC COATING	SEE SWATCH
RB-1	RESILIENT FLOOR BASE	6" HEIGHT, 1/8" THICK, COVE
RB-2	RESILIENT FLOOR BASE	6" HEIGHT, 1/8" THICK, COVE
RES-1	RESILIENT FLOORING	7" X 48" HEAVY COMM LUXURY VINYL TILE W/ IN STEP BACKING, MICRO-BEVEL PROFILE

FINISH SCHEDULE

ROOM NO	ROOM NAME	WALLS	WALL BASE	FLOOR	CEILING MATERIAL	CEILING FINISH	CEILING HEIGHT	REMARKS
101	EXPLOSIVE STORAGE	PT-1	RB-1	CONC	EXP	PT-1	N/A	
102	WORK AREA	PT-1	RB-1	CONC	EXP	PT-1	N/A	
103	TOOL STORAGE	PT-1	RB-1	CONC	EXP	PT-1	N/A	
106	MECH	PT-1	RB-1	CONC	EXP	PT-1	N/A	
111	HALL	PT-1	RB-2	RES	EXP	PT-1	N/A	
112	ADMIN	PT-1	RB-1	CPT-1	ACP-1	N/A	10'-0" AFF	
113	IMIS	PT-1	RB-1	CPT-1	ACP-1	N/A	10'-0" AFF	
114	COMM	PT-1	RB-1	CONC	EXP	PT-1	N/A	
115	ELEC	PT-1	RB-1	CONC	EXP	PT-1	N/A	
116	WOMEN	CT-1 / PT-1	CT-3	CT-2	GYP BD	PT-1	10'-0" AFF	CT-1 WAINSCOT TO 4' - 0" AFF
117	MEN	CT-1 / PT-1	CT-3	CT-2	GYP BD	PT-1	10'-0" AFF	CT-1 WAINSCOT TO 4' - 0" AFF

US Army Corps of Engineers ®

MARK	DESCRIPTION	DATE

ISSUE DATE: 15 OCTOBER 2025
SOLICITATION NO.: W912BA22R0002
CONTRACT NO.: W912BA15D0012
DESIGNED BY: J. VANN
DRAWN BY: K. PANANGANAN
CHECKED BY: J. VANN
SUBMITTED BY: E. EBERT
SIZE: ANSI D

US ARMY CORPS OF ENGINEERS
HONOLULU DISTRICT
FORT SHAFTER, OAHU, HAWAII

RIM ARCHITECTS
55 MERCHANT STREET SUITE 1400,
HONOLULU, HI 96813

JOINT BASE PEARL HARBOR-HICKAM, OAHU, HAWAII
FY22 HAWAII AIR NATIONAL GUARD (HIANG) F-22 PLUS-UP

FINISH AND SIGNAGE SCHEDULE

SHEET ID
A-602

REVISED FINAL SUBMITTAL

Plot Date: 10/17/2025 3:38:18 PM File Path: Autodesk Docs://183029.013 - HIANG F-22 Plus-Up Projects/NMD20080F_ES_ARCH.rvt

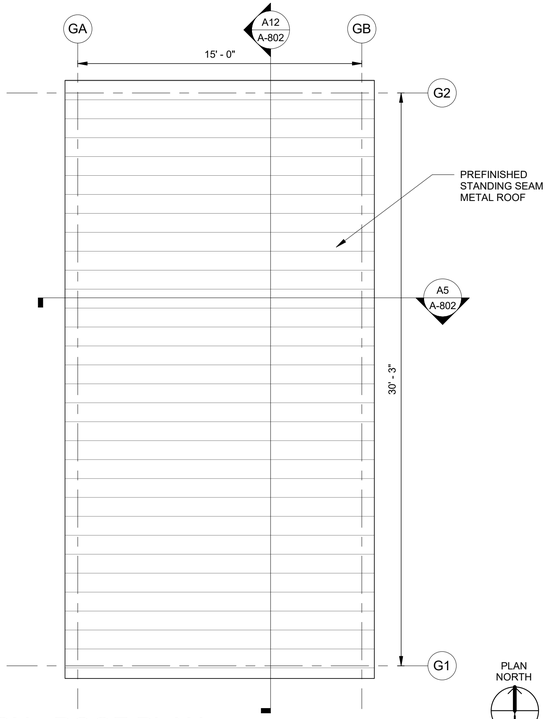

H1 GOX - ROOF PLAN
SCALE: 1/4" = 1'-0"
0 2' 4' 8'

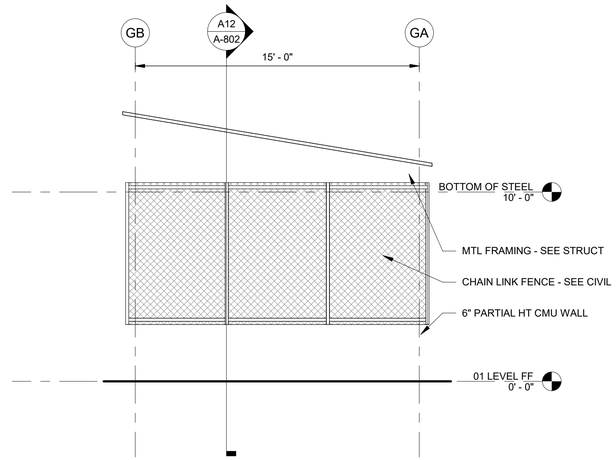

G7 GOX - NORTH ELEVATION
SCALE: 1/4" = 1'-0"
0 2' 4' 8'

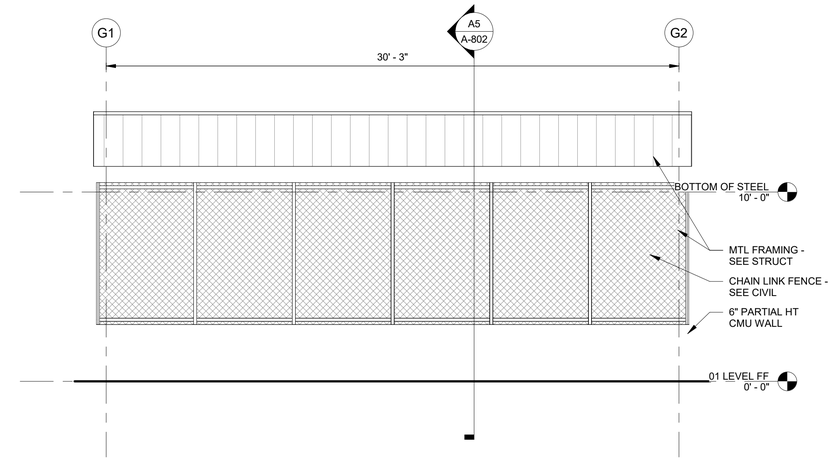

G13 GOX - EAST ELEVATION
SCALE: 1/4" = 1'-0"
0 2' 4' 8'

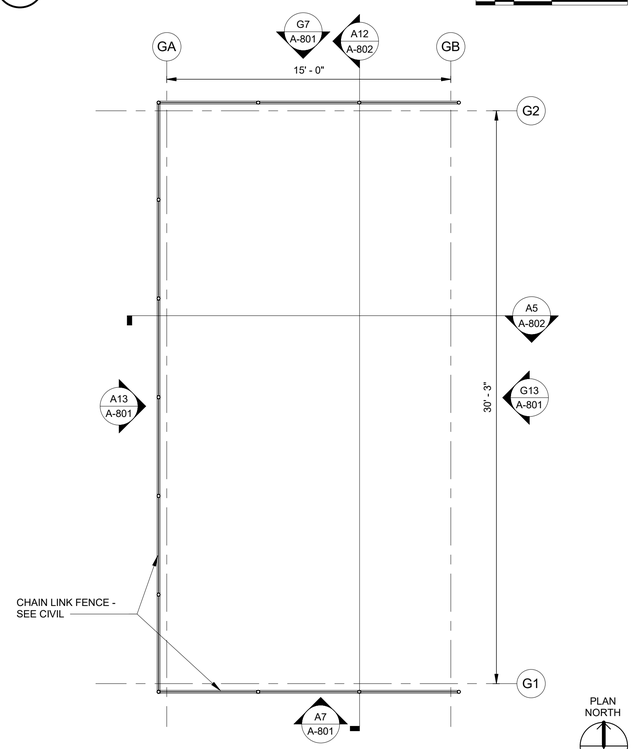

A1 GOX - FLOOR PLAN
SCALE: 1/4" = 1'-0"
0 2' 4' 8'

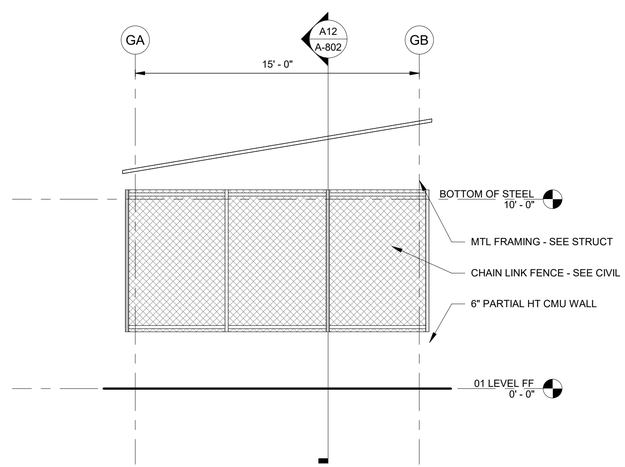

A7 GOX - SOUTH ELEVATION
SCALE: 1/4" = 1'-0"
0 2' 4' 8'

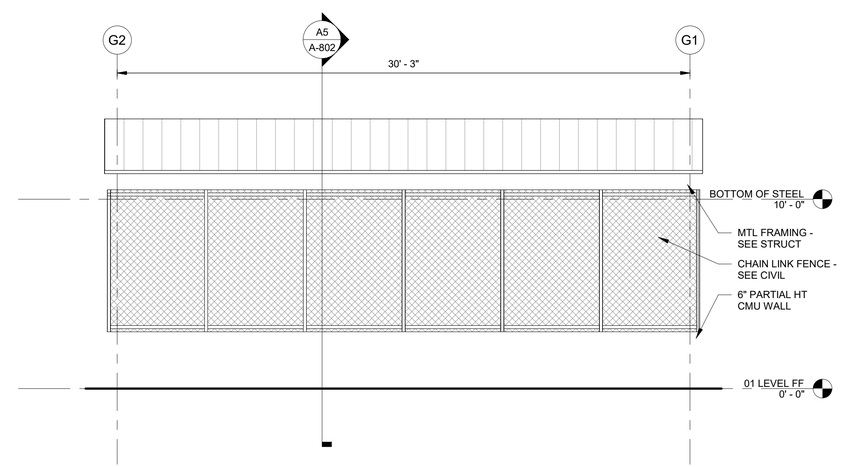

A13 GOX - WEST ELEVATION
SCALE: 1/4" = 1'-0"
0 2' 4' 8'

KEYNOTES

US Army Corps of Engineers ®

MARK	DESCRIPTION	DATE

ISSUE DATE: 15 OCTOBER 2025
SOLICITATION NO.: W912BA22F0002
CONTRACT NO.: W912BA19B0012

DESIGNED BY: J. VANN
DRAWN BY: K. PANANGANAN
CHECKED BY: J. VANN
SUBMITTED BY: E. EBERT
SIZE: ANSI D

US ARMY CORPS OF ENGINEERS
HONOLULU DISTRICT
FORT SHAFTER, OAHU, HAWAII

RIM ARCHITECTS
55 MERCHANT STREET SUITE 1400,
HONOLULU, HI 96813

JOINT BASE PEARL HARBOR-HICKAM, OAHU, HAWAII
FY22 HAWAII AIR NATIONAL GUARD (HIANG) F-22 PLUS-UP

GOX CANOPY SHELTER PLANS AND ELEVATIONS

SHEET ID
A-801

Plot Date: 10/17/2025 3:37:19 PM File Path: Autodesk Docs://18329.013 - HIANG F-22 Plus-Up Projects/NMD20596F_ES_ARCH.rvt

REVISED FINAL SUBMITTAL

KEYNOTES

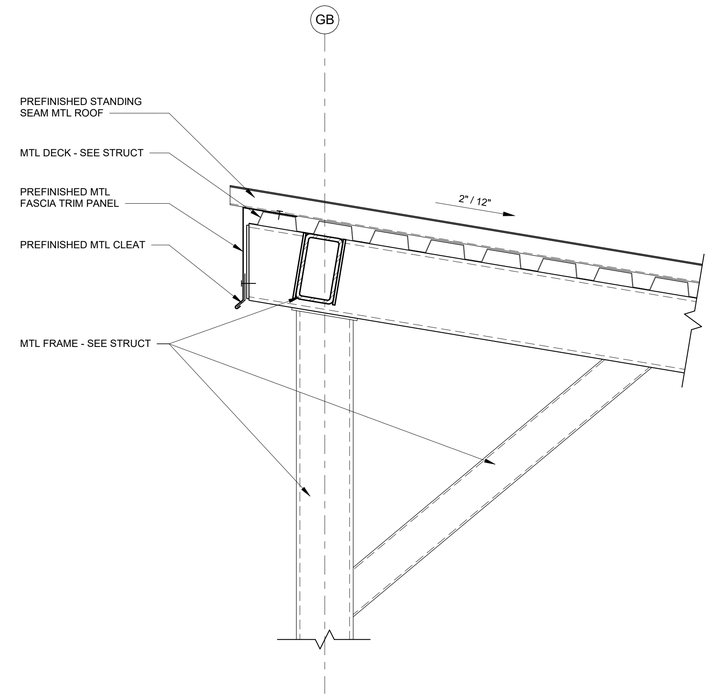

G13 OVERHANG DETAIL

SCALE: 1 1/2" = 1'-0"

0 0.25' 0.5' 1' 1.5'

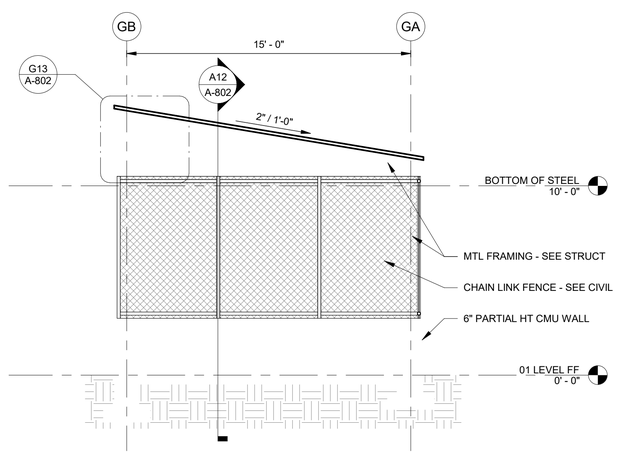

A5 GOX - SECTION 2

SCALE: 1/4" = 1'-0"

0 2' 4' 8'

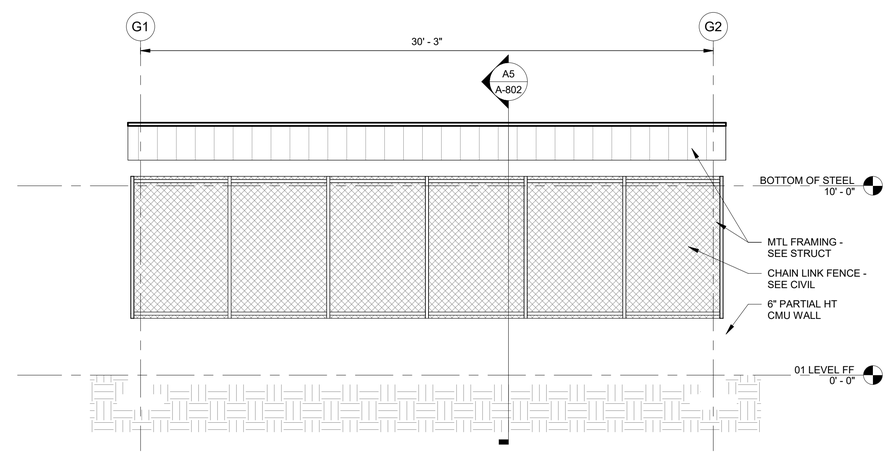

A12 GOX - SECTION 1

SCALE: 1/4" = 1'-0"

0 2' 4' 8'

US Army Corps of Engineers ®

MARK	DESCRIPTION	DATE

DESIGNED BY: J. VANN
DRAWN BY: K. PANANGANAN
CHECKED BY: J. VANN
SUBMITTED BY: E. EBERT
SIZE: ANSI D
ISSUE DATE: 15 OCTOBER 2025
SOLICITATION NO.: W9128A22F0002
CONTRACT NO.: W9128A19D0072

US ARMY CORPS OF ENGINEERS
HONOLULU DISTRICT
FORT SHAFTER, OAHU, HAWAII

RIM ARCHITECTS
55 MERCHANT STREET SUITE 1400,
HONOLULU, HI 96813

JOINT BASE PEARL HARBOR-HICKAM, OAHU, HAWAII
FY22 HAWAII AIR NATIONAL GUARD (HIANG) F-22 PLUS-UP

GOX CANOPY SHELTER SECTIONS AND DETAILS

SHEET ID
A-802

Plot Date: 10/17/2025 3:37:20 PM File Path: Autodesk Docs://18329.013 - HIANG F-22 Plus-Up Projects/NMD2206087_ES_ARCH.rvt

REVISED FINAL SUBMITTAL

BUILDING CODE SUMMARY

INTERNATIONAL CODES, INTERNATIONAL CODE COUNCIL:

IBC	INTERNATIONAL BUILDING CODE, 2018 EDITION

NATIONAL FIRE CODES, NATIONAL FIRE PROTECTION ASSOCIATION STANDARDS INCLUDING:

NFPA 1	FIRE CODE, 2021
NFPA 10	STANDARD FOR PORTABLE FIRE EXTINGUISHERS, 2022
NFPA 13	STANDARD FOR THE INSTALLATION OF SPRINKLER SYSTEMS, 2022
NFPA 24	STANDARD FOR THE INSTALLATION OF PRIVATE SERVICE MAINS AND THEIR APPURTENANCES, 2022
NFPA 70	NATIONAL ELECTRICAL CODE, 2020
NFPA 72	NATIONAL FIRE ALARM CODE, 2022
NFPA 101	LIFE SAFETY CODE, 2021

UNIFIFED FACILITIES CRITERIA:

UFC 1-200-01	DOD BUILDING CODE, 8 OCTOBER 2019 CHANGE 1, 1 OCTOBER 2020
UFC 3-600-01	FIRE PROTECTION ENGINEERING FOR FACILITIES, 8 AUGUST 2016 CHANGE 6, 6 MAY 2021
UFC 4-010-01	DOD MINIMUM ANTITERRORISM STANDARDS FOR BUILDINGS, 12 DECEMBER 2018 CHANGE 1, 19 AUGUST 2020
UFC 4-021-01	DESIGN AND O&M: MASS NOTIFICATION SYSTEMS 9 APRIL 2008 CHANGE 1, JANUARY 2010

PROJECT ADDRESS: JOINT BASE PEARL HARBOR/ HICKAM

PROJECT DESCRIPTION: EGRESS FACILITY

DESCRIPTION	IBC OCCUPANCY	NFPA OCCUPANCY
EGRESS SHOP	B (BUSINESS)	BUSINESS (CH 38)
	F-1 (INDUSTRIAL)	INDUSTRIAL (CH 40)
	H-1 (HIGH-HAZARD)	HIGH-HAZARD INDUSTRIAL (CH 40)
	S-1 (STORAGE)	STORAGE (CH 42)

CONSTRUCTION TYPE: TYPE II-B, NON-COMBUSTIBLE, NON-RATED CONSTRUCTION

BUILDING HEIGHT: THE BUILDING HEIGHT MUST FOLLOW THE MOST RESTRICTIVE REQUIREMENTS FOR THE OCCUPANCY GROUPS UNDER CONSIDERATION, IBC 508.3.2. THE MOST RESTRICTIVE REQUIREMENT IS HIGH-HAZARD GROUP H-1.

OCCUPANCY	ALLOWABLE	PROVIDED
B	75 FT / 4 STORIES	
F-1	75 FT / 3 STORIES	
H-1	55 FT / 1 STORY	17 FT / 1 STORY
S-1	75 FT / 3 STORIES	

ALLOWABLE AREA: THE BUILDING AREA MUST FOLLOW THE MOST RESTRICTIVE REQUIREMENTS FOR THE OCCUPANCY GROUPS UNDER CONSIDERATION, IBC 508.3.2. THE MOST RESTRICTIVE REQUIREMENT IS HIGH-HAZARD GROUP H-1.

OCCUPANCY	ALLOWABLE AREA PER STORY (SF)	ACTUAL AREA (SF)
B	92,000 SF	
F-1	62,000 SF	
H-1	7,000 SF	3,200 SF
S-1	70,000 SF	

EXPOSURE PROTECTION:

LOCATION	EXPOSURE	FIRE SEPARATION PROVIDED	REQUIRED FIRE RATING
NORTH	>150 FT TO OPEN SPACE	>75 FT	0 HR
EAST	138 FT TO PV ARRAY	138 FT	0 HR
SOUTH	200 FT TO HANGAR	100 FT	0 HR
WEST	>150 FT TO OPEN SPACE	>75 FT	0 HR

CONSTRUCTION REQUIREMENTS: FOR GENERAL STRUCTURAL DESIGN CRITERIA SEE STRUCTURAL DRAWINGS

FIRE RESISTANCE REQUIREMENTS, IBC TABLE 601:

BUILDING ELEMENT	MATERIAL	REQUIRED RATING	SECTION
STRUCTURAL FRAME	NON-COMBUSTIBLE	0 HR	IBC, TABLE 601
BEARING WALLS - EXTERIOR	NON-COMBUSTIBLE	0 HR	IBC, TABLE 601
BEARING WALLS - INTERIOR	NON-COMBUSTIBLE	0 HR	IBC, TABLE 601
NONBEARING WALLS - EXTERIOR	NON-COMBUSTIBLE	0 HR	IBC, TABLE 602
NONBEARING WALLS - INTERIOR	NON-COMBUSTIBLE	0 HR	IBC, TABLE 601
FLOOR/CEILING ASSEMBLY	NON-COMBUSTIBLE	0 HR	IBC, TABLE 601
ROOF/CEILING ASSEMBLY	NON-COMBUSTIBLE	0 HR	IBC, TABLE 601

BASED ON IBC TABLE 602 FOR OCCUPANCY GROUPS B, F-1, H-1, AND S-1WITH TYPE II-B CONSTRUCTION, THE EXTERIOR WALLS OFTHE BUILDING DO NOT REQUIRE A FIRE RESISTANCE RATING WITH A MINIMUM 30' FIRE SEPARATION DISTANCE.

PER IBC 705.8.1, THERE IS NO LIMIT ON UNPROTECTED OPENINGS IN THE EXTERIOR WALLS WHEN THE EXTERIOR WALLS ARE NOT REQUIRED TO HAVE A FIRE RESISTANCE RATING.

	FIRE SEPARATION DISTANCE	RATING REQUIRED	SECTION
EXTERIOR WALL	B, F-1, H-1, S-1 ≥ 30'	0 HR	IBC, TABLE 602
EXTERIOR WALL OPENINGS		0 HR	IBC, TABLE 705.8

LIFE SAFETY CODE SUMMARY

OCCUPANT LOAD FACTOR

BUSINESS USE	150 SF/PERSON
STORAGE USE	500 SF/PERSON
INDUSTRIAL USE	100 SF/PERSON

EGRESS FACILITY:

TOTAL CALCULATED LOAD: 23 PEOPLE

NUMBER OF EXITS:

	LEVEL	REQUIRED	PROVIDED
EGRESS FACILITY:	FIRST	2 (BUILDING) 2 (EACH HIGH-HAZARD AREA)	6 (BUILDING) 2 (EACH HIGH-HAZARD AREA)

CAPACITY OF MEANS OF EGRESS:
HORIZONTAL - 0.2 IN/PERSON
HORIZONTAL (HIGH-HAZARD) - 0.4 IN/PERSON

	REQUIRED CAPACITY	PROVIDED CAPACITY
FIRST FLOOR	23	800

MEANS OF EGRESS:

	TRAVEL DISTANCE ALLOWED	MAX TRAVEL DISTANCE PROVIDED
TRAVEL DISTANCE TO EXITS: FIRST FLOOR	75 FT	41 FT
COMMON PATH OF TRAVEL: FIRST FLOOR	COMMON PATH OF TRAVEL ALLOWED 100 FT (0 FT FOR HIGH-HAZARD)	MAX COMMON PATH OF TRAVEL PROVIDED 15 FT (0 FT FOR HIGH-HAZARD)
DEAD END CORRIDORS: FIRST FLOOR	DEAD END ALLOWED 50 FT (0 FT FOR HIGH-HAZARD)	MAX DEAD END PROVIDED N/A

DISCHARGE FROM EXITS: EXITS DISCHARGE DIRECTLY TO THE EXTERIOR.

US Army Corps of Engineers ®

MARK	DESCRIPTION	DATE

ISSUE DATE: 15 OCTOBER 2025
SOLICITATION NO.: W912BA22F0002
CONTRACT NO.: W912BA15B0012

DESIGNED BY: J.HIGASHI
DRAWN BY: J.SUNADA
CHECKED BY: C.PRUITT
SUBMITTED BY: E.EBERT
SIZE: ANSI D

US ARMY CORPS OF ENGINEERS
HONOLULU DISTRICT
FORT SHAFTER, OAHU, HAWAII

COFFMAN ENGINEERS, INC.
745 FORT STREET, SUITE 400
HONOLULU, HI 96813

JOINT BASE PEARL HARBOR-HICKAM, OAHU, HAWAII
FY22 HAWAII AIR NATIONAL GUARD (HANG) F-22 PLUS-UP
ADD EGRESS SHOP

BUILDING CODE SUMMARY

SHEET ID

F-001

REVISED FINAL SUBMITTAL

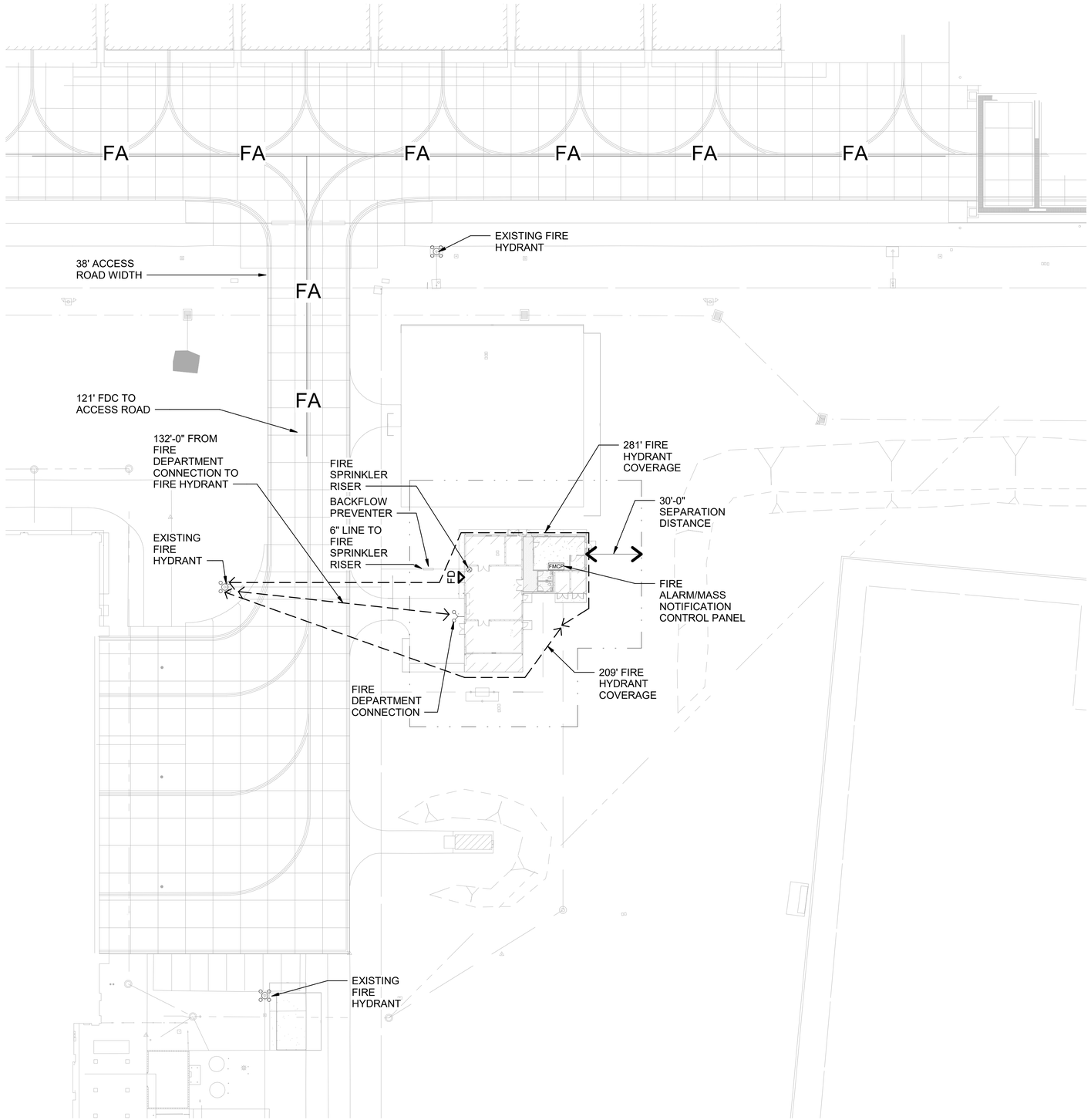

BUILDING CODE SITE LEGEND

— · · · —	BUILDING SEPARATION REQUIREMENT
FD	FIRE DEPARTMENT ACCESS
	FIRE HYDRANT
	FIRE DEPARTMENT CONNECTION
—FA—	FIRE ACCESS ROAD

PLAN NORTH

0 16' 32' 64'

A1 CODE COMPLIANCE SITE PLAN

SCALE 1/32" = 1'-0"

US Army Corps of Engineers ®

MARK	DESCRIPTION	DATE

ISSUE DATE: 15 OCTOBER 2025
SOLICITATION NO.: W9128A22F0002
CONTRACT NO.: W9128A19B0072

DESIGNED BY: J.HIGASHI
DRAWN BY: J.SUNADA
CHECKED BY: C.PERLITT
SUBMITTED BY: E.EBERT
SIZE: ANSI D

US ARMY CORPS OF ENGINEERS
HONOLULU DISTRICT
FORT SHAFTER, OAHU, HAWAII

COFFMAN ENGINEERS, INC.
745 FORT STREET, SUITE 400
HONOLULU, HI 96813

JOINT BASE PEARL HARBOR-HICKAM, OAHU, HAWAII
FY22 HAWAII AIR NATIONAL GUARD (HANG) F-22 PLUS-UP
ADD EGRESS SHOP

CODE COMPLIANCE SITE PLAN

SHEET ID

F-101

REVISED FINAL SUBMITTAL

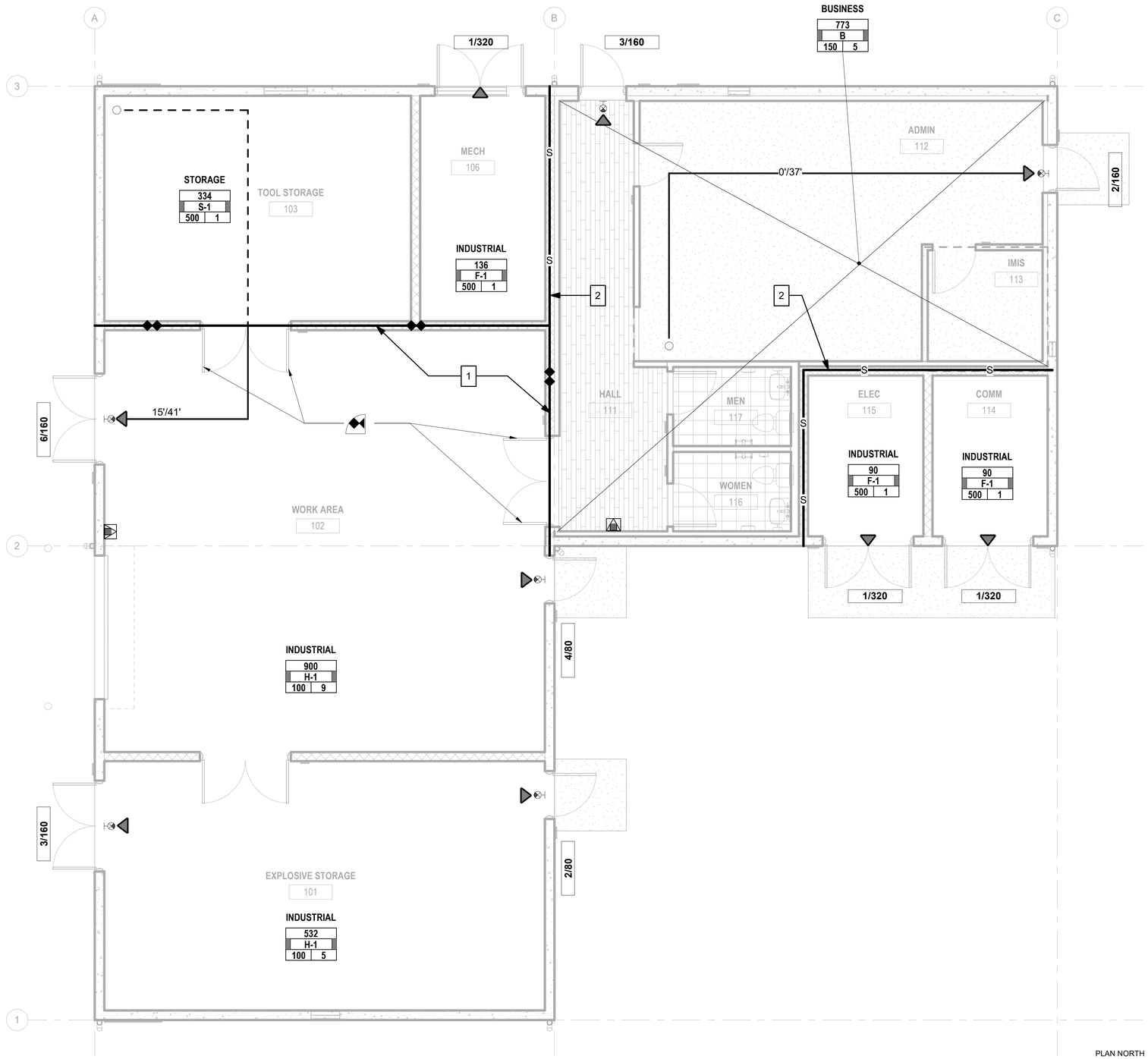

A1 FLOOR PLAN - LIFE SAFETY

SCALE 1/4" = 1'-0"

LIFE SAFETY LEGEND

SYMBOL	DESCRIPTION
—S—	SMOKE PARTITION
	2 HOUR FIRE RESISTIVE CONSTRUCTION
	90 MINUTE RATED FIRE DOOR ASSEMBLY WITH SELF CLOSING AND LATCHING HARDWARE
XX' / XX'	TRAVEL PATH POINT OF CHOICE OF TWO EXITS, COMMON PATH OF TRAVEL ENDS
XX' / XX'	COMMON PATH OF TRAVEL
	FIRE EXIT
	EXIT SIGN
	MULTIPURPOSE DRY CHEMICAL TYPE PORTABLE FIRE EXTINGUISHER, SURFACE MOUNTED CABINET, 4A:60B:C MINIMUM RATING
XXX/XXX	BUILDING OCCUPANT LOAD USING EXIT MAXIMUM OCCUPANT LOAD CAPACITY OF EXIT
BUSINESS	NFPA 101 OCCUPANCY
150	SPACE AREA
B	IBC OCCUPANCY GROUP/DIVISION
50 3	OCCUPANCY LOAD (PERSONS)
	OCCUPANCY LOAD FACTOR (SF/PERSON)

KEY NOTES:

1. 2-HOUR RATED FIRE BARRIER SEPARATING THE H-1 OCCUPANCY FROM THE REMAINDER OF THE BUILDING, UFC 3-600-01, 4-5.4.3.
2. SMOKE PARTITION SEPARATING THE STORAGE, MECHANICAL, ELECTRICAL, AND TELECOM ROOMS FROM BUSINESS OCCUPANCIES, NFPA 101, SECTION 8.7.1.2.

US Army Corps of Engineers ®

MARK	DESCRIPTION	DATE

ISSUE DATE: 15 OCTOBER 2025
SOLICITATION NO.: W9128A22F0002
CONTRACT NO.: W9128A19D0072

DESIGNED BY: J.HIGASHI
DRAWN BY: J.SUNADA
CHECKED BY: C.PRUITT
SUBMITTED BY: E.EBERT
SIZE: ANSI D

US ARMY CORPS OF ENGINEERS
HONOLULU DISTRICT
FORT SHAFTER, OAHU, HAWAII

COFFMAN ENGINEERS, INC.
745 FORT STREET, SUITE 400
HONOLULU, HI 96813

JOINT BASE PEARL HARBOR-HICKAM, OAHU, HAWAII
FY22 HAWAII AIR NATIONAL GUARD (HIANG) F-22 PLUS-UP
ADD EGRESS SHOP

FLOOR PLAN - LIFE SAFETY

SHEET ID
F-102

REVISED FINAL SUBMITTAL

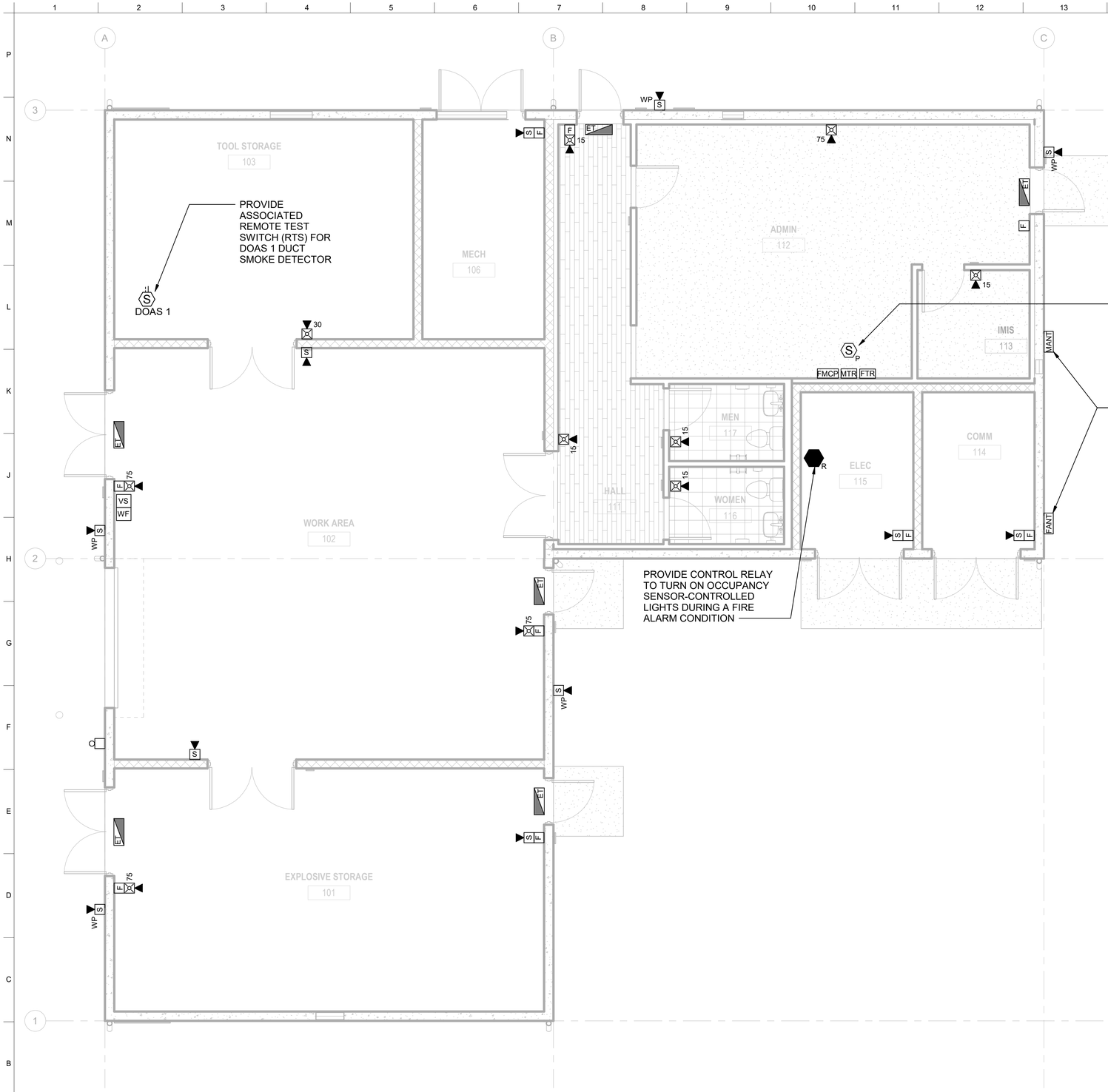

FLOOR PLAN - FIRE ALARM-MASS NOTIFICATION

A1

SCALE 1/4" = 1'-0"

PLAN NORTH

0 2' 4' 8'

US Army Corps of Engineers ®

MARK	DESCRIPTION	DATE

DESIGNED BY: J.HIGASHI
DRAWN BY: J.SUNADA
CHECKED BY: C.PRUITT
SUBMITTED BY: E.EBERT
SIZE: ANSI D

ISSUE DATE: 15 OCTOBER 2025
SOLICITATION NO.: W9128A22F0002
CONTRACT NO.: W9128A19D0072

US ARMY CORPS OF ENGINEERS
HONOLULU DISTRICT
FORT SHAFTER, OAHU, HAWAII

COFFMAN ENGINEERS, INC.
745 FORT STREET, SUITE 400
HONOLULU, HI 96813

JOINT BASE PEARL HARBOR-HICKAM, OAHU, HAWAII
FY22 HAWAII AIR NATIONAL GUARD (HANG) F-22 PLUS-UP
ADD EGRESS SHOP

FLOOR PLAN - FIRE ALARM-MASS NOTIFICATION

SHEET ID

FA101

REVISED FINAL SUBMITTAL

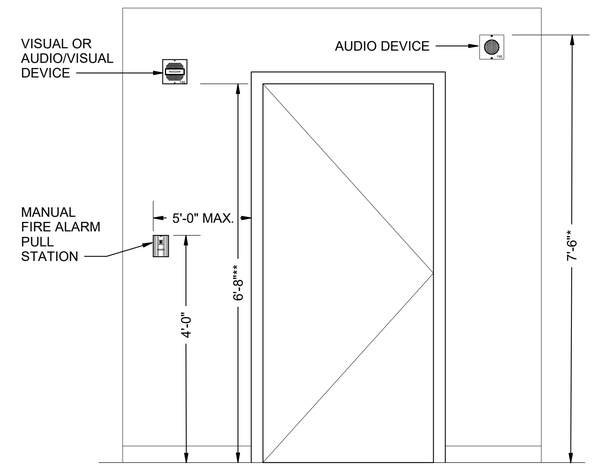

* IF CEILING HEIGHT DOES NOT PERMIT MOUNTING HEIGHTS NOTED FOR AUDIO DEVICES WHILE LEAVING A MINIMUM OF 6-INCHES BETWEEN THE CEILING AND THE TOP OF THE AUDIO DEVICE, THE DEVICE MUST BE MOUNTED AT 6-INCHES BELOW CEILING MEASURED TO THE TOP OF THE DEVICE.

** IF CEILING HEIGHT DOES NOT PERMIT MOUNTING HEIGHTS NOTED FOR VISUAL OR AUDIO/VISUAL DEVICE, THE DEVICE MUST BE MOUNTED AT 6-INCHES BELOW CEILIN MEASURED TO THE BOTTOM OF THE DEVICE.

H15 TYPICAL MOUNTING DETAIL FOR FIRE ALARM DEVICES

SCALE NTS

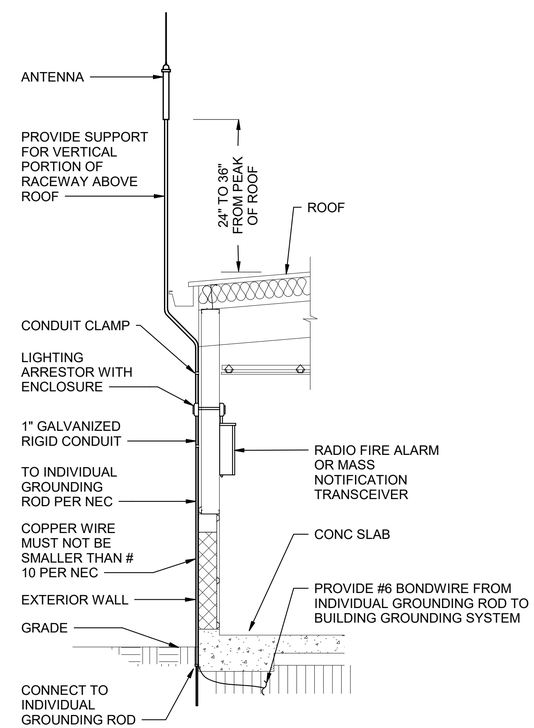

A16 ANTENNA MOUNTING DETAIL

SCALE NTS

US Army Corps of Engineers ®

MARK	DESCRIPTION	DATE

ISSUE DATE: 15 OCTOBER 2025
SOLICITATION NO.: W912BA22F0002
CONTRACT NO.: W912BA15B0012

DESIGNED BY: J.HIGASHI
DRAWN BY: J.SUNADA
CHECKED BY: C.PRUITT
SUBMITTED BY: E.EBERT
SIZE: ANSI D

US ARMY CORPS OF ENGINEERS
HONOLULU DISTRICT
FORT SHAFTER, OAHU, HAWAII

COFFMAN ENGINEERS, INC.
745 FORT STREET, SUITE 400
HONOLULU, HI 96813

JOINT BASE PEARL HARBOR-HICKAM, OAHU, HAWAII
FY22 HAWAII AIR NATIONAL GUARD (HANG) F-22 PLUS-UP
ADD EGRESS SHOP

FIRE ALARM-MASS NOTIFICATION DETAILS

SHEET ID

FA501

REVISED FINAL SUBMITTAL

FIRE ALARM/MASS NOTIFICATION SYSTEM SEQUENCE OF OPERATIONS

	SYSTEM INPUT	1 ANNUNCIATE ALARM ZONE AT BUILDING FMCP	2 ANNUNCIATE SUPERVISORY ZONE AT BUILDING FMCP	3 ANNUNCIATE TROUBLE ZONE AT BUILDING FMCP	4 TRANSMIT ZONE 1 GENERAL ALARM VIA RADIO FIRE ALARM SYSTEM	5 TRANSMIT ZONE 2 SPRINKLER WATERFLOW ALARM VIA RADIO FIRE ALARM SYSTEM	6 TRANSMIT ZONE 5 GENERAL TROUBLE SIGNAL VIA RADIO FIRE ALARM SYSTEM	7 TRANSMIT ZONE 6 GENERAL SUPERVISORY SIGNAL VIA RADIO FIRE ALARM SYSTEM	8 ACTIVATE FIRE ALARM EVACUATION MESSAGE FROM ALL SPEAKERS	9 BROADCAST LIVE OR RECORDED LOCAL MESSAGE FROM ALL SPEAKERS	10 BROADCAST BASE WIDE SYSTEM MESSAGE FROM ALL SPEAKERS	11 ACTIVATE BUILDING VISUAL APPLIANCES	12 TURN OFF MASS NOTIFICATION AUDIO MESSAGE	13 SILENCE FIRE ALARM MESSAGE DURING MASS NOTIFICATION BROADCAST	14 ILLUMINATE LED TEXT SIGN "EVACUATE"	15 ILLUMINATE LED TEXT SIGN "ANNOUNCEMENT"	16 SHUT DOWN ASSOCIATED AIR HANDLING UNIT	17 ACTIVATE ELECTRIC BELL	18 TURN ON ALL OCCUPANCY SENSOR-CONTROLLED LIGHTS	
A	MANUAL FIRE ALARM STATION ACTIVATES INTO ALARM	X			X				X			X			X				X	A
B	SPRINKLER SYSTEM WATERFLOW ACTIVATES INTO ALARM	X				X			X			X			X			X	X	B
C	SPRINKLER SYSTEM TAMPER SWITCH ACTIVATION		X					X												C
D	SMOKE DETECTOR ACTIVATES INTO ALARM	X			X				X			X			X				X	D
E	SYSTEM TROUBLE			X			X													E
F	ACTIVATION OF THE LOCAL MASS NOTIFICATION SYSTEM FROM THE FMCP		X					X		X		X				X				F
G	ACTIVATION OF THE LOCAL MASS NOTIFICATION SYSTEM DURING A FIRE ALARM CONDITION		X					X		X		X		X		X				G
H	AFTER THE MASS NOTIFICATION SYSTEM HAS BEEN OVERRIDING THE FIRE ALARM FOR 10 MINUTES								X			X	X		X					H
I	RECEIVE MESSAGE BROADCAST FROM BASE WIDE MASS NOTIFICATION SYSTEM		X					X			X	X		X		X				I
J	ACTIVATION OF DUCT SMOKE DETECTOR		X					X									X			J
		1	2	3	4	5	6	7	8	9	10	11	12	13	14	15	16	17	18	

	RADIO FIRE ALARM TRANSCEIVER ZONES
1	GENERAL ALARM
2	SPRINKLER WATERFLOW
3	(NOT USED)
4	(NOT USED)
5	GENERAL TROUBLE
6	GENERAL SUPERVISORY

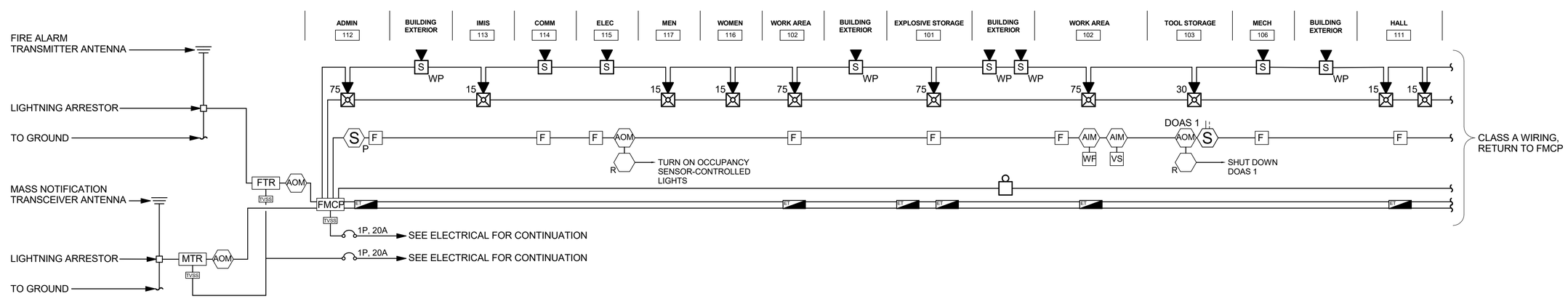

A1 RISER DIAGRAM

SCALE NTS

US Army Corps of Engineers ®

MARK	DESCRIPTION	DATE

DESIGNED BY: J.HIGASHI
DRAWN BY: J.SUNADA
CHECKED BY: C.PRUITT
SUBMITTED BY: E.EBERT
SIZE: ANSI D
ISSUE DATE: 15 OCTOBER 2025
SOLICITATION NO.: W912BA22F0002
CONTRACT NO.: W912BA15B0012

US ARMY CORPS OF ENGINEERS
HONOLULU DISTRICT
FORT SHAFTER, OAHU, HAWAII

COFFMAN ENGINEERS, INC.
745 FORT STREET, SUITE 400
HONOLULU, HI 96813

JOINT BASE PEARL HARBOR-HICKAM, OAHU, HAWAII
FY22 HAWAII ANG NATIONAL GUARD (HANG) F-22 PLUS-UP
ADD EGRESS SHOP

FIRE ALARM-MASS NOTIFICATION SYSTEM SEQUENCE OF OPERATIONS AND RISER DIAGRAM

SHEET ID
FA601

REVISED FINAL SUBMITTAL

FIRE PROTECTION NOTES

AUTOMATIC SPRINKLER SYSTEM NOTES:

1. THE SPRINKLER SYSTEM DESIGN AND INSTALLATION MUST BE IN ACCORDANCE WITH NFPA 13-2022, AND SPECIFICATION SECTION 21 13 13. THE CONTRACTOR MUST VERIFY THE LOCATION OF ALL SPRINKLER SYSTEM COMPONENTS AND COORDINATE WITH THE VARIOUS TRADES.

2. ALL DEVICES AND EQUIPMENT MUST BE UL LISTED OR FM APPROVED.

3. AUTOMATIC WET PIPE SPRINKLER PROTECTION MUST BE PROVIDED THROUGHOUT THE BUILDING AS SHOWN ON THE DRAWINGS.

4. WATER SUPPLY INFORMATION:

   COFFMAN ENGINEERS INC. PERFORMED A HYDRANT FLOW TEST ON JUNE 14, 2022, WHICH YIELDED THE FOLLOWING RESULTS:

   HYDRANT 570, NEAR APRON

STATIC PRESSURE	72 PSI
RESIDUAL PRESSURE	20 PSI
FLOW AT RESIDUAL PRESSURE	2,177 GPM

5. THE SPRINKLER SYSTEM MUST BE HYDRAULICALLY DESIGNED IN ACCORDANCE WITH NFPA 13. SPRINKLER SYSTEM DESIGN CRITERIA MUST BE AS FOLLOWS:

   OFFICE AREAS

OCCUPANCY HAZARD CLASSIFICATION:	LIGHT HAZARD
SPRINKLER TYPE:	QUICK RESPONSE
K-FACTOR:	5.6
SPRINKLER TYPE:	UPRIGHT OR PENDENT, UTILIZE CONCEALED HEADS IN AREAS WITH CEILINGS
SPRINKLER TEMPERATURE:	ORDINARY
DESIGN DENSITY:	0.1 GPM/SF
DESIGN METHOD:	AREA/DENSITY
DESIGN AREA:	1,500 SF
OUTSIDE HOSE STREAM:	250 GPM
DURATION:	60 MINUTES

   SHOPS, ELEC, MECH, & STORAGE ROOM

OCCUPANCY HAZARD CLASSIFICATION:	ORDINARY HAZARD
SPRINKLER TYPE:	QUICK RESPONSE
K-FACTOR:	8.0
SPRINKLER TYPE:	UPRIGHT OR PENDENT, UTILIZE CONCEALED HEADS IN AREAS WITH CEILINGS
SPRINKLER TEMPERATURE:	INTERMEDIATE
DESIGN DENSITY:	0.2 GPM/SF
DESIGN METHOD:	AREA/DENSITY
DESIGN AREA:	3,250 SF (30% INCREASE FOR SLOPE, NFPA 13 SECTION 19.2.3.2.4)
OUTSIDE HOSE STREAM:	250 GPM
DURATION:	60 MINUTES

   CALCULATIONS MUST UTILIZE THE BASE WATER SUPPLY AND MUST PROVIDE A 10% SAFETY CUSHION.

6. SPRINKLER PIPING MUST COMPLY WITH NFPA 13, EXCEPT THAT COPPER AND PLASTIC PIPE MUST NOT BE PERMITTED. ALL PIPING IN FINISHED AREAS MUST BE CONCEALED.

7. THE PIPE ROUTING AND SPRINKLER LOCATIONS ARE CONCEPTUAL. THE CONTRACTOR MUST INSTALL THE SYSTEM IN ACCORDANCE WITH THE APPLICABLE CODES, MANUFACTURER'S RECOMMENDATIONS AND QUIPMENT LISTINGS.

8. ALL FIRE SPRINKLER PIPING MUST BE PROVIDED WITH EARTHQUAKE PROTECTION IN ACCORDANCE WITH NFPA 13 INCLUDING BRANCH LINE RESTRAINT. CP MUST BE 0.5 PER NFPA 13.

9. PROVIDE INSPECTION AND HYDROSTATIC TESTS IN ACCORDANCE WITH NFPA 13 AND SPECIFICATION 21 13 13.

10. SPARE SPRINKLERS MUST BE PROVIDED IN ACCORDANCE WITH NFPA 13. HYDRAULIC DATA PLATES MUST BE PROVIDED AT THE RISER AND ABOVE THE FIRE SPRINKLER CABINET.

11. A PRESSURE RELIEF VALVE MUST BE PROVIDED AT EACH RISER.

12. PROVIDE A NOMINAL CLEARANCE OF 2 IN AROUND PIPES 3.5 IN AND SMALLER, AND PROVIDE A NOMINAL CLEARANCE OF 4 IN AROUND PIPES 4 IN AND LARGER PASSING THROUGH CONCRETE / MASONRY WALLS OR FLOORS.

13. THE FIRE SUPPRESSION SYSTEM CONTRACTOR IS TO PROVIDE A COMPLETE ENGINEERED SYSTEM, COMPLETE WITH CALCULATIONS AND FINAL DESIGN DRAWINGS SIGNED AND SEALED BY AN INDIVIDUAL THAT HAS OBTAINED NATIONAL INSTITUTE FOR CERTIFICATION IN ENGINEERING TECHNOLOGIES (NICET LEVEL III AUTOMATIC SPRINKLER SYSTEMS) CERTIFICATION IN ACCORDANCE WITH THE APPLICABLE NFPA CODES. NFPA 13 AUTOMATIC SPRINKLER SYSTEM. THE DRAWINGS MUST HAVE THE QCFPE REVIEW STAMP PRIOR TO SUBMITTING TO THE GOVERNMENT FPE.

14. SIDE OUTLET TEES USING RUBBER GASKET FITTINGS AND HOLECUT MECHANICAL "TEE'S" ARE PROHIBITED.

15. PROVIDE LABEL TAG INDICATING "NORMALLY OPEN" OR "NORMALLY CLOSED" ON ALL VALVES INCLUDING AND NOT LIMITED TO ALL RISER AND TRIM, SECTIONAL VALVES, INSPECTORS TEST VALVES AND DRAINS.

16. CONTRACTOR MUST NOT INSTALL ANY FIRE SPRINKLER PIPING THAT CROSSES OVER OR PASSES THROUGH ANY ELECTRICAL ROOM OR COMMUNICATION ROOM.

17. SPRINKLERS FOR THE COMMUNICATIONS ROOM MUST BE SIDEWALLS WITH GUARDS. SPRINKLER AND PIPING IN THE ELECTRIC ROOM MUST COMPLY WITH NFPA 70, ARTICLE 110.

18. PRESSURE LOSS THROUGH THE DOUBLE CHECK BACKFLOW PREVENTER MUST BE A MINIMUM OF 8 PSI.

19. PROVIDE AUTOMATIC AIR VENTS AT HIGH POINTS IN THE SPRINKLER SYSTEM AS REQUIRED BY NFPA 13, WITH A DRAIN THAT IS PIPED TO THE EXTERIOR OF THE BUILDING.

FIRE ALARM/MASS NOTIFICATION SYSTEM NOTES:

1. THE FIRE ALARM/MASS NOTIFICATION SYSTEM MUST BE DESIGNED AND INSTALLED IN ACCORDANCE WITH NFPA 72-2022 AND SPECIFICATION SECTION 28 31 76.

2. ALL DEVICES AND EQUIPMENT MUST BE U.L. LISTED OR FM APPROVED.

3. DEVICE LOCATIONS AND CONDUIT ROUTING ARE CONCEPTUAL. DEVICES ARE SHOWN IN SUGGESTED LOCATIONS. FINAL QUANTITY AND LAYOUT MUST BE IN ACCORDANCE WITH APPLICABLE CODES, MANUFACTURER'S RECOMMENDATIONS, AND EQUIPMENT LISTINGS. COORDINATE LOCATIONS WITH LIGHTING SYSTEM.

4. ALL FIRE ALARM CONDUIT MUST BE 3/4" MINIMUM. ALL CONDUIT IN FINISHED AREAS MUST BE CONCEALED.

5. SYNCHRONIZE ALL VISUAL NOTIFICATION APPLIANCES. SYNCHRONIZE ALL AUDIBLE NOTIFICATION APPLIANCES.

6. THE FIRE ALARM SIGNAL MUST BE A TEMPORAL THREE PATTERN TONE.

7. VISUAL NOTIFICATION APPLIANCES CANDELA RATINGS ARE SHOWN ON THE DRAWINGS.

8. SIGNALING LINE CIRCUITS, INITIATING DEVICE CIRCUITS AND NOTIFICATION APPLIANCE CIRCUITS MUST BE CLASS A.

9. SMOKE DETECTORS MUST BE LOCATED A MINIMUM OF 3 FT. FROM SUPPLY AND RETURN AIR DIFFUSERS.

10. PROVIDE SIGNAGE AT THE FIRE ALARM CONTROL PANEL IDENTIFYING THE POWER PANEL AND CIRCUIT.

11. THE BUILDING FIRE ALARM PANEL MUST BE ADDRESSABLE.

12. ALL JUNCTION, TERMINAL AND PULLING BOXES AND COVERS MUST BE PAINTED THE COLOR RED AND MUST BE IDENTIFIED WITH ENGRAVED LABELS BY ZONE AND CIRCUIT THAT IT CONTAINS.

13. THE FIRE ALARM SYSTEM CONTRACTOR IS TO PROVIDE A COMPLETE ENGINEERED SYSTEM, COMPLETE WITH CALCULATIONS AND FINAL DESIGN DRAWINGS SIGNED AND SEALED BY AN INDIVIDUAL THAT HAS OBTAINED NATIONAL INSTITUTE FOR CERTIFICATION IN ENGINEERING TECHNOLOGIES (NICET LEVEL IV FIRE ALARM SYSTEMS) CERTIFICATION IN ACCORDANCE WITH THE NFPA 72. THE DRAWINGS MUST HAVE THE QFPE REVIEW STAMP PRIOR TO SUBMITTING TO THE GOVERNMENT FPE.

14. PROVIDE A CABINET NEXT TO THE FIRE ALARM CONTROL PANEL LABELED "FIRE ALARM DOCUMENTS". THE CABINET MUST CONTAIN THE FINAL RECORD OF COMPLETION, UPDATED FIRE ALARM AS-BUILTS, AND APPROVED SHOP DRAWINGS. PROVIDE DOCUMENTATION OF THE SOFTWARE AND FIRMWARE USED.

15. TESTING MUST INCLUDE INTELLIGIBILITY MEASUREMENTS FOR FIRE ALARM/MASS NOTIFICATION SYSTEMS. THE CIS VALUE MUST BE 0.8 OR HIGHER, HOWEVER STANDARD ROUNDING IS ACCEPTABLE SUCH THAT A VALUE OF 0.75 CAN BE ROUNDED TO 0.8.

FIRE PROTECTION SYMBOLS AND ABBREVIATIONS

NEW	DESCRIPTION
	PIPE / CONDUIT BREAK FOR CONTINUATION
VS	TAMPER SWITCH
WF	FLOW SWITCH
	FIRE DEPARTMENT CONNECTION
FMCP	FIRE ALARM/MASS NOTIFICATION CONTROL PANEL
FTR	FIRE ALARM TRANSMITTER
MTR	MASS NOTIFICATION TRANSCEIVER
FTA	FIRE ALARM TRANSMITTER ANTENNA
MTA	MASS NOTIFICATION TRANSCEIVER ANTENNA
S P	PHOTOELECTRIC SMOKE DETECTOR
F	MANUAL PULL STATION
S	SPEAKER ONLY, WALL MOUNTED
S C	SPEAKER ONLY, CEILING MOUNTED
	COMBINATION SPEAKER / VISIBLE DEVICE, WALL MOUNTED
C	COMBINATION SPEAKER / VISIBLE DEVICE, CEILING MOUNTED
	ELECTRIC BELL
ST	LCD / LED VISUAL TEXTUAL DISPLAY
AIM	ADDRESSABLE INPUT MODULE
AOM	ADDRESSABLE OUTPUT MODULE
(TYP)	TYPICAL
WP	WEATHERPROOF

US Army Corps of Engineers ®

MARK	DESCRIPTION	DATE

ISSUE DATE: 15 OCTOBER 2025
SOLICITATION NO.: W912BA22F0002
CONTRACT NO.: W912BA15B0012

DESIGNED BY: J.HIGASHI
DRAWN BY: J.SUNADA
CHECKED BY: C.PRUITT
SUBMITTED BY: E.EBERT
SIZE: ANSI D

US ARMY CORPS OF ENGINEERS
HONOLULU DISTRICT
FORT SHAFTER, OAHU, HAWAII

COFFMAN ENGINEERS, INC.
745 FORT STREET, SUITE 400
HONOLULU, HI 96813

JOINT BASE PEARL HARBOR-HICKAM, OAHU, HAWAII
FY22 HAWAII AIR NATIONAL GUARD (HANG) F-22 PLUS-UP
ADD EGRESS SHOP

FIRE PROTECTION NOTES, SYMBOLS AND ABBREVIATIONS

SHEET ID
FX001

REVISED FINAL SUBMITTAL

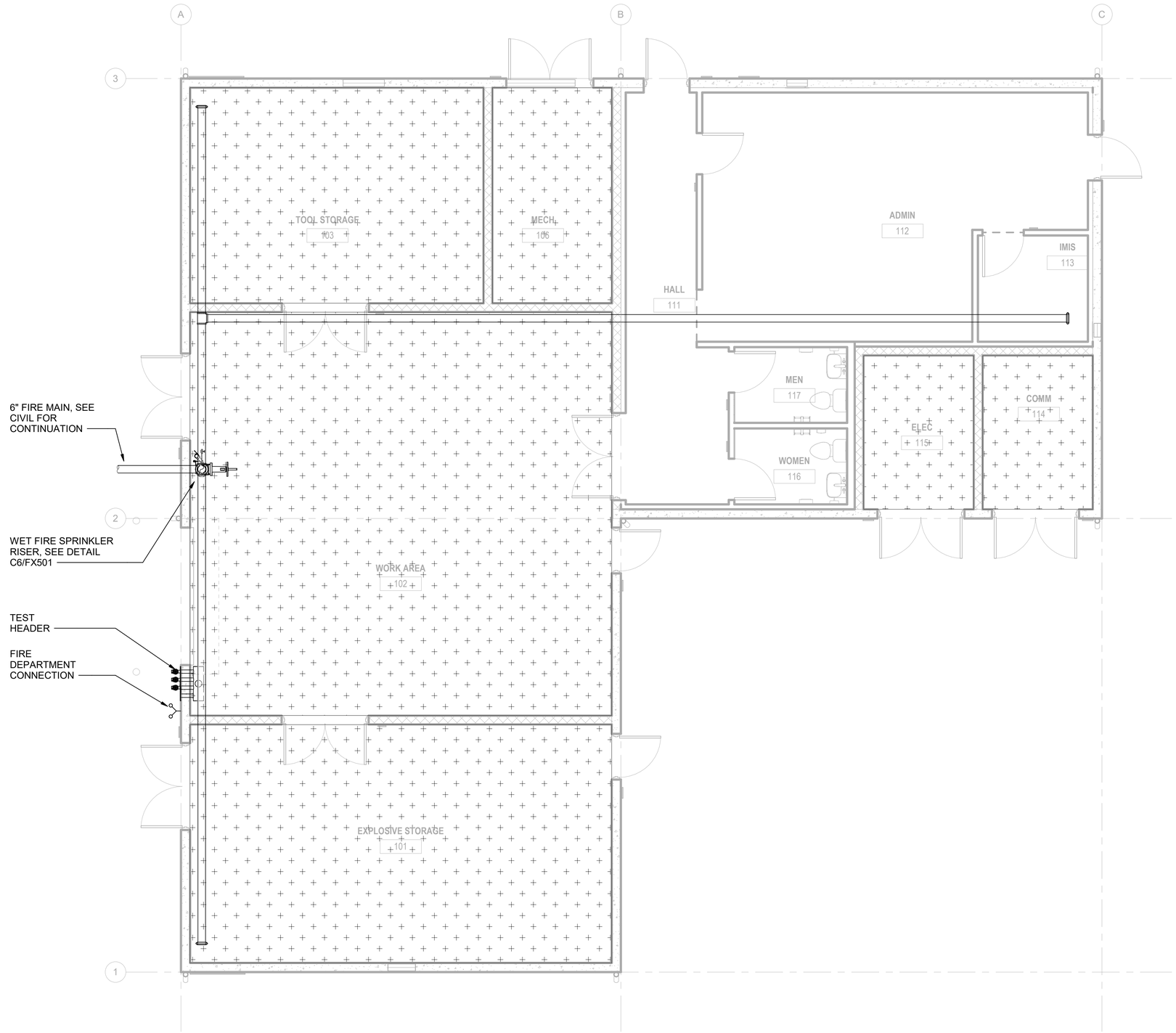

FIRE SPRINKLER HAZARD CLASSIFICATION LEGEND

SYMBOL	DESCRIPTION
	LIGHT HAZARD
	ORDINARY HAZARD

A1 FLOOR PLAN - FIRE SPRINKLER

SCALE 1/4" = 1'-0"

US Army Corps of Engineers ®

MARK	DESCRIPTION	DATE

DESIGNED BY: J.HIGASHI
DRAWN BY: J.SUNADA
CHECKED BY: C.PRUITT
SUBMITTED BY: E.EBERT
SIZE: ANSI D

ISSUE DATE: 15 OCTOBER 2025
SOLICITATION NO.: W9128A22F0002
CONTRACT NO.: W9128A19D0072

US ARMY CORPS OF ENGINEERS
HONOLULU DISTRICT
FORT SHAFTER, OAHU, HAWAII

COFFMAN ENGINEERS, INC.
745 FORT STREET, SUITE 400
HONOLULU, HI 96813

JOINT BASE PEARL HARBOR-HICKAM, OAHU, HAWAII
FY22 HAWAII AIR NATIONAL GUARD (HANG) F-22 PLUS-UP
ADD EGRESS SHOP

FLOOR PLAN - FIRE SPRINKLER

SHEET ID

FX101

REVISED FINAL SUBMITTAL

CUTTING, DRILLING, OR BENDING STEEL STRUCTURAL MEMBERS TO SUPPORT HANGERS, BRANCH LINE RESTRAINT, OR SWAY BRACING IS NOT PERMITTED (TYP)

NOTE:
FOR THE ALL THREAD ROD, PROVIDE A SECOND RESTRAINT IN THE OPPOSITE DIRECTION WHEN "A" IS GREATER THAN 22 INCHES (TYP)

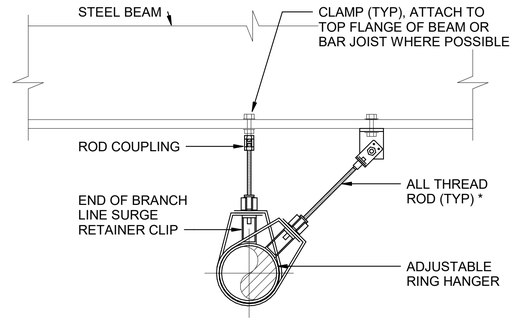

* ROD SIZE MUST BE DETERMINED BY CALCULATIONS WHERE L/R DOES NOT EXCEED 400

L5 SEISMIC BRACING END HEAD (STEEL)
SCALE NTS

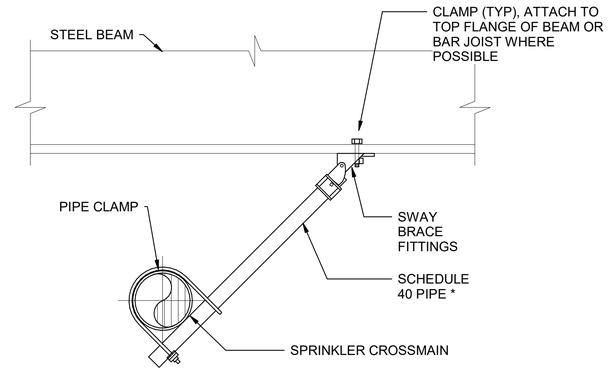

* PIPE SIZE MUST BE DETERMINED BY CALCULATIONS WHERE L/R DOES NOT EXCEED 400

K10 SEISMIC BRACING LATERAL SWAY (STEEL)
SCALE NTS

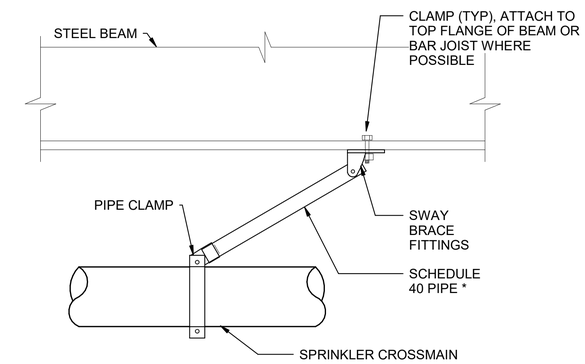

* PIPE SIZE MUST BE DETERMINED BY CALCULATIONS WHERE L/R DOES NOT EXCEED 400

K15 SEISMIC BRACING LONGITUDINAL SWAY (STEEL)
SCALE NTS

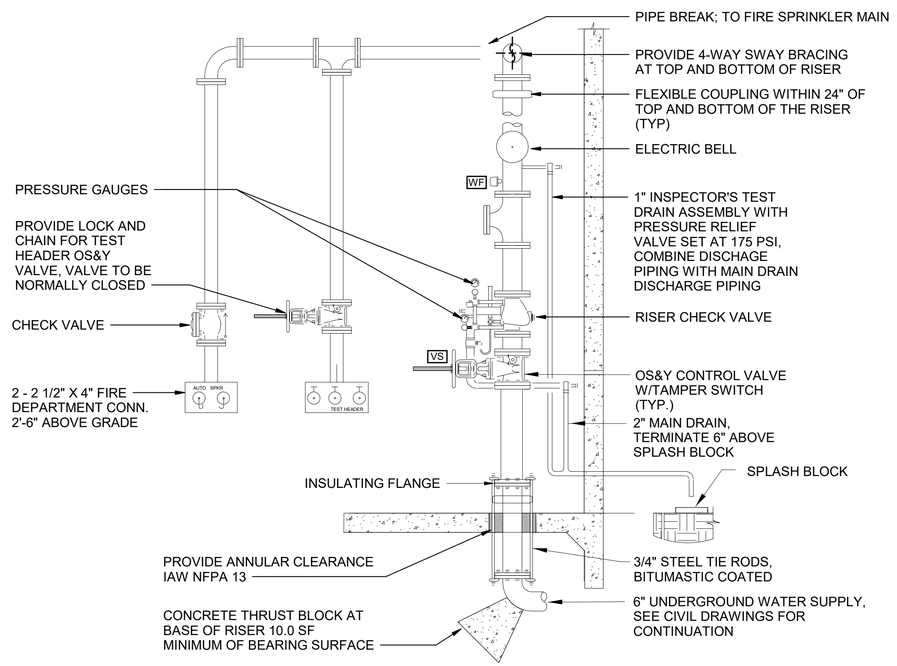

C6 FIRE SPRINKLER RISER DETAIL
SCALE NTS

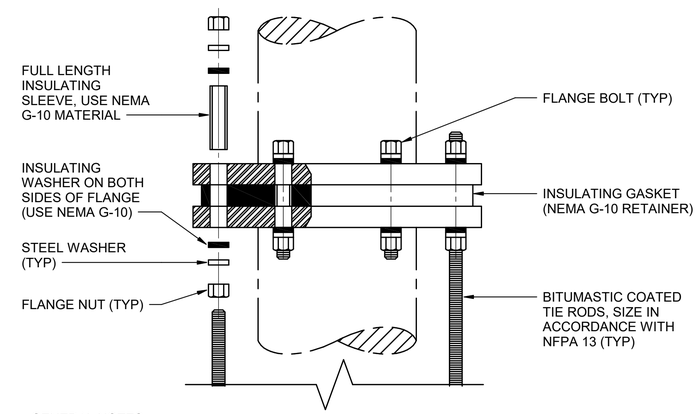

GENERAL NOTES:

1. POLYETHYLENE, MYLAR, AND PHENOLIC INSULATING SLEEVES AND WASHERS ARE NOT ACCEPTABLE AND WILL BE REJECTED. PROVIDE NEMA G-10 TYPE INSULATING SLEEVES AND WASHERS.

2. DOUBLE INSULATING WASHERS ARE REQUIRED (ONE FOR EACH SIDE OF EACH FLANGE ROD).

3. FULL FACE GASKETS REQUIRED. GASKET RETAINER MUST BE HIGH COMPRESSIVE STRENGTH ASTM G-10 MATERIAL.

4. NEW GRADE 8 BOLT AND NUTS REQUIRED FOR EACH FLANGE.

5. HARDWARE QUANTITIES IN INSULATING FLANGE KIT WILL VARY BASED ON GASKET PATTERN AND PIPE SIZE.

6. DO NOT COAT OR SPRAY INSULATING COMPONENTS WITH GREASE.

7. AFTER INSULATING FLANGE KIT IS COMPLETELY INSTALLED, WRAP FLANGE WITH MINIMUM 3 LAYERS OF PIPE JOINT TAPE WRAP.

C14 INSULATING FLANGE DETAIL
SCALE NTS

US Army Corps of Engineers ®

MARK	DESCRIPTION	DATE

ISSUE DATE: 15 OCTOBER 2025
SOLICITATION NO.: W912BA22F0002
CONTRACT NO.: W912BA15B0012

DESIGNED BY: J.HIGASHI
DRAWN BY: J.SUNADA
CHECKED BY: C.CRUTT
SUBMITTED BY: E.EBERT
SIZE: ANSI D

US ARMY CORPS OF ENGINEERS
HONOLULU DISTRICT
FORT SHAFTER, OAHU, HAWAII

COFFMAN ENGINEERS, INC.
745 FORT STREET, SUITE 400
HONOLULU, HI 96813

JOINT BASE PEARL HARBOR-HICKAM, OAHU, HAWAII
FY22 HAWAII AIR NATIONAL GUARD (HIANG) F-22 PLUS-UP
ADD EGRESS SHOP

FIRE SPRINKLER DETAILS

SHEET ID
FX501

REVISED FINAL SUBMITTAL

GENERAL PLUMBING NOTES

A. REFER TO SPECIFICATIONS FOR MATERIALS AND METHODS OF CONSTRUCTION

B. OVERHEAD PLUMBING EQUIPMENT AND SYSTEMS SHALL BE SUPPORTED TO MEET ANTI-TERRORISM/FORCE PROTECTION MEASURES OF UFC 4-010-01.

C. ALL FLOOR MOUNTED EQUIPMENT IN MECHANICAL ROOM SHALL BE MOUNTED ON 6" HIGH HOUSEKEEPING PADS. THESE PADS SHALL EXTEND 6" BEYOND THE FOOTPRINT OF THE EQUIPMENT IN ALL DIRECTIONS.

D. WHERE PIPE SIZES ARE NOT INDICATED, THEY SHALL BE IN ACCORDANCE WITH THE INTERNATIONAL PLUMBING CODE (LATEST EDITION). DOMESTIC COLD WATER PIPING SHALL BE LIMITED TO 5 FPS. DOMESTIC HOT WATER PIPING SHALL BE LIMITED TO 4 FPS.

E. TRAP PRIMER LINES SHALL BE 1/2" TYPE K COPPER. TRAP PRIMER VALVES/DISTRIBUTORS SHALL BE PROVIDED FOR ALL FLOOR DRAINS AND FLOOR SINKS. TRAP PRIMER VALVE/DISTRIBUTORS SHALL BE LOCATED IN THE NEAREST ACCESSIBLE LOCATION AND PROVIDED WITH ACCESS PANELS.

F. DRAWINGS ARE SCHEMATIC AND ARE TO SHOW DESIGN INTENT, AND IT ISTHE RESPONSIBILITY OF THE CONTRACTOR TO COORDINATE PLACEMENTS.

G. SEISMICALLY BRACE ALL EQUIPMENT AND PIPING IN ACCORDANCE WITH ASCE 7-16. PROVIDE SHAKE TABLE TESTING OF ALL EQUIPMENT IN ACCORDANCE WITH ASCE 7-16.

H. SANITARY PIPE SHALL BE SLOPED 1/4" PER FOOT UNLESS SPECIFIED.

I. REFER TO MECHANICAL SHEETS FOR ADDITIONAL DETAILS.

PIPING SYMBOLS

- CONTINUATION
- DROP IN PIPE
- VALVE IN RISER
- ELBOW
- ELBOW UP
- ELBOW DOWN
- TEE
- UNION
- UNION, FLANGED
- TOP CONNECTION
- BOTTOM CONNECTION
- PIPE PITCH
- VTR — VENT THRU ROOF
- CONCENTRIC REDUCER
- ECCENTRIC REDUCER
- PRV — PRESSURE RELIEF
- PRESSURE REDUCING VALVE
- TPRV — TEMP & PRESS RELIEF
- ANCHOR
- BALL JOINT
- EXPANSION LOOP
- GUIDE
- EXPANSION JOINT
- FLEXIBLE CONNECTOR

- FLOOR DRAIN WITH TRAP
- FD CO — FLOOR DRAIN WITH CLEANOUT
- FLOOR SINK WITH HALF GRATE
- FLOOR SINK WITH FULL GRATE
- DIRECTION OF FLOW
- FLOOR PENETRATION
- WH — WALL HYDRANT
- WCO — WALL CLEANOUT
- HB — HOSE BIB
- WATER HAMMER ARRESTOR/ACCESS
- THERMOMETER
- THERMOMETER WELL
- STRAINER W/BLOW-OFF AND HOSE CONNECTION
- PRESSURE GAUGE WITH COCK
- PS — PRESSURE SWITCH
- FS — FLOW SWITCH
- AV — AIR VENT, AUTOMATIC
- AIR VENT, MANUAL
- AS — AIR SEPARATOR
- FLOW METER, ORIFICE
- PETE'S PLUG
- PRESSURE/TEMPERATURE TEST PORT)
- NFWH — NON-FREEZING WALL HYDRANT

VALVES

- BALL VALVE
- GLOBE VALVE
- GATE VALVE
- CHECK VALVE
- PLUG VALVE
- SOLENOID VALVE
- CALIBRATED BALANCING VALVE
- AUTOMATIC BALANCING VALVE
- BUTTERFLY VALVE
- MODULATING TWO-WAY
- S — SOLENOID TWO-WAY
- THREE-WAY

PIPING SYSTEMS

- — - — DOMESTIC COLD WATER
- — -- — DOMESTIC HOT WATER
- — --- — DOMESTIC HOT WATER RETURN
- — SS — SANITARY SEWER
- — V — VENT
- — NG — NATURAL GAS
- — A — COMPRESSED AIR
- — F — FIRE PROTECTION
- — NPW — NON-POTABLE WATER (PURPLE PIPE) PIPES SHALL BE MARKED WITH "NONPOTABLE WATER, DO NOT DRINK"
- — CHS — CHILLED WATER SUPPLY
- — CHR — CHILLED WATER RETURN
- — HWS — HEATING WATER SUPPLY
- — HWR — HEATING WATER RETURN
- — CD — CONDENSATE DRAIN
- — CWS — CONDENSER WATER SUPPLY
- — CWR — CONDENSER WATER RETURN
- — RS — REFRIGERANT SUCTION
- — RL — REFRIGERANT LIQUID
- — RD — ROOF DRAIN

PLUMBING ABBREVIATIONS

A

AC - AIR COMPRESSOR
AD - AIR DRYER
AF - AIR FILTER
AFF - ABOVE FINISHED FLOOR
ALT - ALTERNATE
AP - ACCESS PANEL
AR - AIR RECEIVER

B

BOP - BOTTOM OF PIPE ELEV.

C

CA - COMPRESSED AIR
CAV - CONSTANT AIR VOLUME
CD - CONDENSATE DRAIN
CFM - CUBIC FEET PER MINUTE
CL - CENTERLINE
CLG - CEILING
COND - CONDENSATE/CONDENSER
CONN - CONNECTION/CONNECT
COP - CENTER OF PIPE
COTG - CLEANOUT TO GRADE

D

DB - DRY BULB TEMPERATURE
DDC - DIRECT DIGITAL CONTROL
DTC - DATA TERMINAL CABINET

E

EEWS - EMERGENCY EYEWASH SHOWER
EL - ELEVATION
EMCS - ENERGY MONITORING AND CONTROL SYSTEM
ESP - EXTERNAL STATIC PRESSURE
EWH - ELECTRIC WATER HEATER
EWT - ENTERING WATER TEMP.

F

FA - FIELD ADJUSTABLE
FC - FAIL CLOSED
FCO - FLOOR CLEANOUT
FD - FLOOR DRAIN
FID - FIELD INTERFACE DEVICE
FLA - FULL LOAD AMPS
FO - FAIL OPEN
FSK - FLOOR SINK

G

GA - GAUGE

H

HB - HOSE BIBB
HD - HUB DRAIN
HW - HOT WATER

I

IE - INVERT ELEVATION

K

kW - KILOWATTS

L

LAV - LAVATORY
LWT - LEAVING WATER TEMP.

N

NA - NOT APPLICABLE
NC - NORMALLY CLOSED
NIC - NOT IN CONTRACT
NO - NORMALLY OPEN
NPS - NOMINAL PIPE SIZE
NPT - NATIONAL PIPE THREAD
NTS - NOT TO SCALE

O

OC - ON CENTER
OED - OPEN END DUCT
OV - OUTLET VELOCITY
OWS - OIL WATER SEPARATOR

P

Pa - PASCALS
PaA - PASCALS ABSOLUTE
PaG - PASCALS GAUGE
PD - PRESSURE DROP
PRV - PRESURE REDUCING VALVE

R

RA - RETURN AIR
RPM - REVOLUTIONS PER MINUTE

S

S - SANITARY
SOG - SLAB ON GRADE
SP - STATIC PRESSURE
SV - SUPPLY VALVE

T

TOP - TOP OF PIPE ELEVATION
TOS - TOP OF SLAB/ TOP OF STEEL
TP - TRAP PRIMER
TSP - TOTAL STATIC PRESSURE

V

V - VENT
VP - VELOCITY PRESSURE
VTR - VENT THRU ROOF

W

W - WATTS
WB - WET BULB
WC - WATER CLOSET
WG - WATER GAUGE

REFERENCE SYMBOLOGY

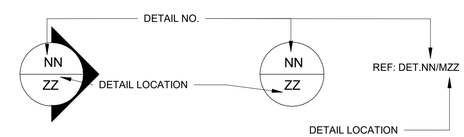

US Army Corps of Engineers ®

MARK	DESCRIPTION	DATE

ISSUE DATE: 15 OCTOBER 2025
SOLICITATION NO.: W912BA22F0002
CONTRACT NO.: W912BA19B0072

DESIGNED BY: C. LI
DRAWN BY: R. BALIGNASAY
CHECKED BY: J. YUEN
SUBMITTED BY: ISE
SIZE: ANSI D

US ARMY CORPS OF ENGINEERS
HONOLULU DISTRICT
FORT SHAFTER, OAHU, HAWAII

INSYNERGY ENGINEERING
1001 BISHOP STREET SUITE 2500
HONOLULU, HI 96813

JOINT BASE PEARL HARBOR-HICKAM, OAHU, HAWAII
FY22 HAWAII AIR NATIONAL GUARD (HIANG) F-22 PLUS-UP
ADD EGRESS SHOP
PROJECT NO.: KHND209087

PLUMBING LEGEND

SHEET ID
P-001

REVISED FINAL SUBMITTAL

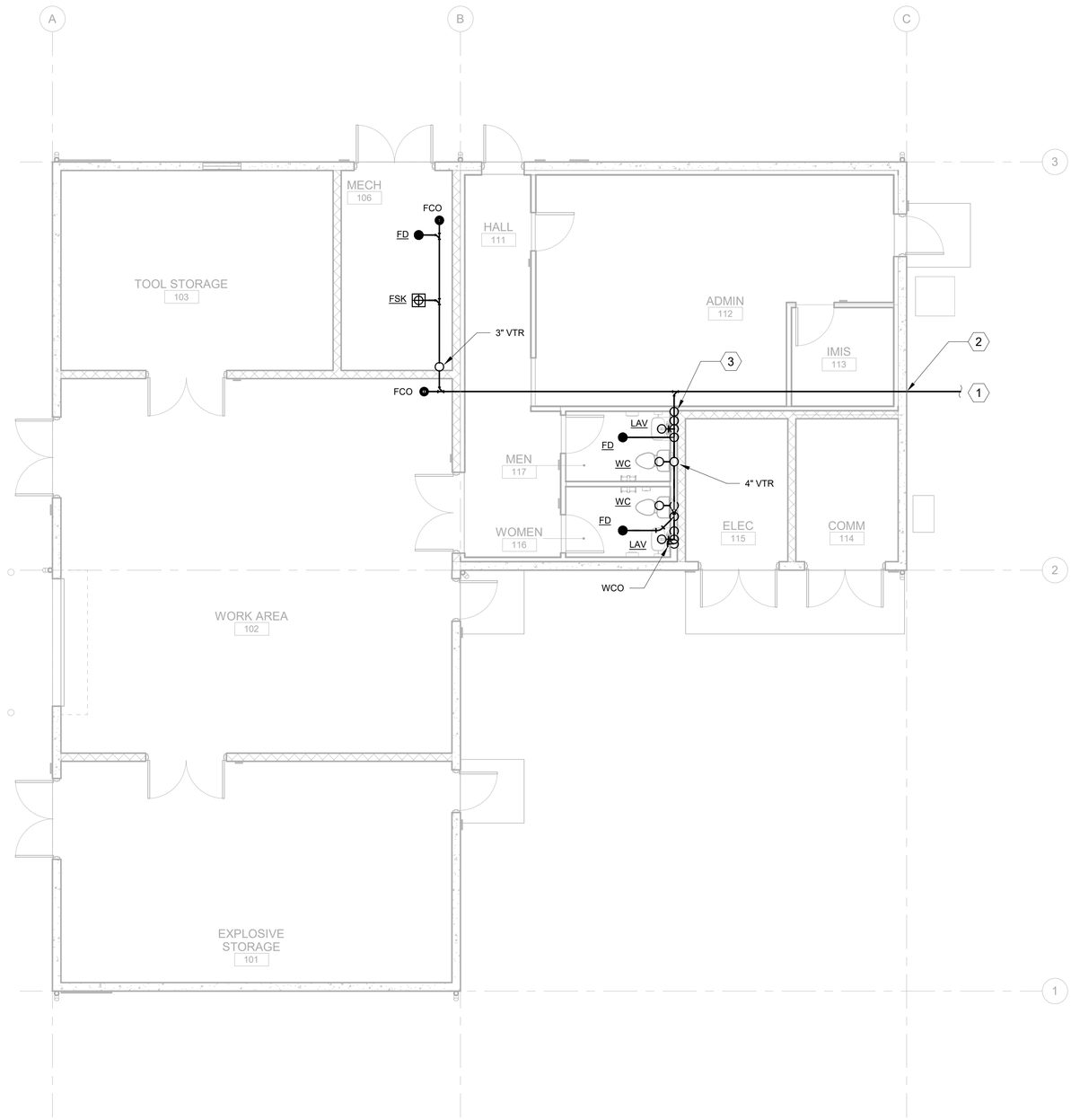

PLAN NORTH

0 2' 4' 8' 12'

A1 PLUMBING PLAN - SANITARY

SCALE: 3/16" = 1'-0"

GENERAL NOTES

1. PROVIDE W/V ROUGH-IN TO NEW LAV, WC, FSK, AND FD.

KEYNOTES

1. 4" S, INVERT = 4.48'. SEE CIVIL FOR CONTINUATION.
2. 4" S, INVERT = 4.50'.
3. INSULATE SANITARY WASTE PIPE FROM AIR GAP RECEPTOR TO GROUND.

US Army Corps of Engineers ®

MARK	DESCRIPTION	DATE

ISSUE DATE: 15 OCTOBER 2025
SOLICITATION NO.: W912BA22F0002
CONTRACT NO.: W912BA15B0012

DESIGNED BY: C. LI
DRAWN BY: R. BALIGNASAY
CHECKED BY: J. VIERA
SUBMITTED BY: ISE
SIZE: ANSI D

US ARMY CORPS OF ENGINEERS
HONOLULU DISTRICT
FORT SHAFTER, OAHU, HAWAII

INSYNERGY ENGINEERING
1001 BISHOP STREET SUITE 2500
HONOLULU, HI 96813

JOINT BASE PEARL HARBOR-HICKAM, OAHU, HAWAII
FY22 HAWAII AIR NATIONAL GUARD (HANG) F-22 PLUS-UP
ADD EGRESS SHOP
PROJECT NO.: KMND209087

PLUMBING PLAN - SANITARY

SHEET ID

P-101

REVISED FINAL SUBMITTAL

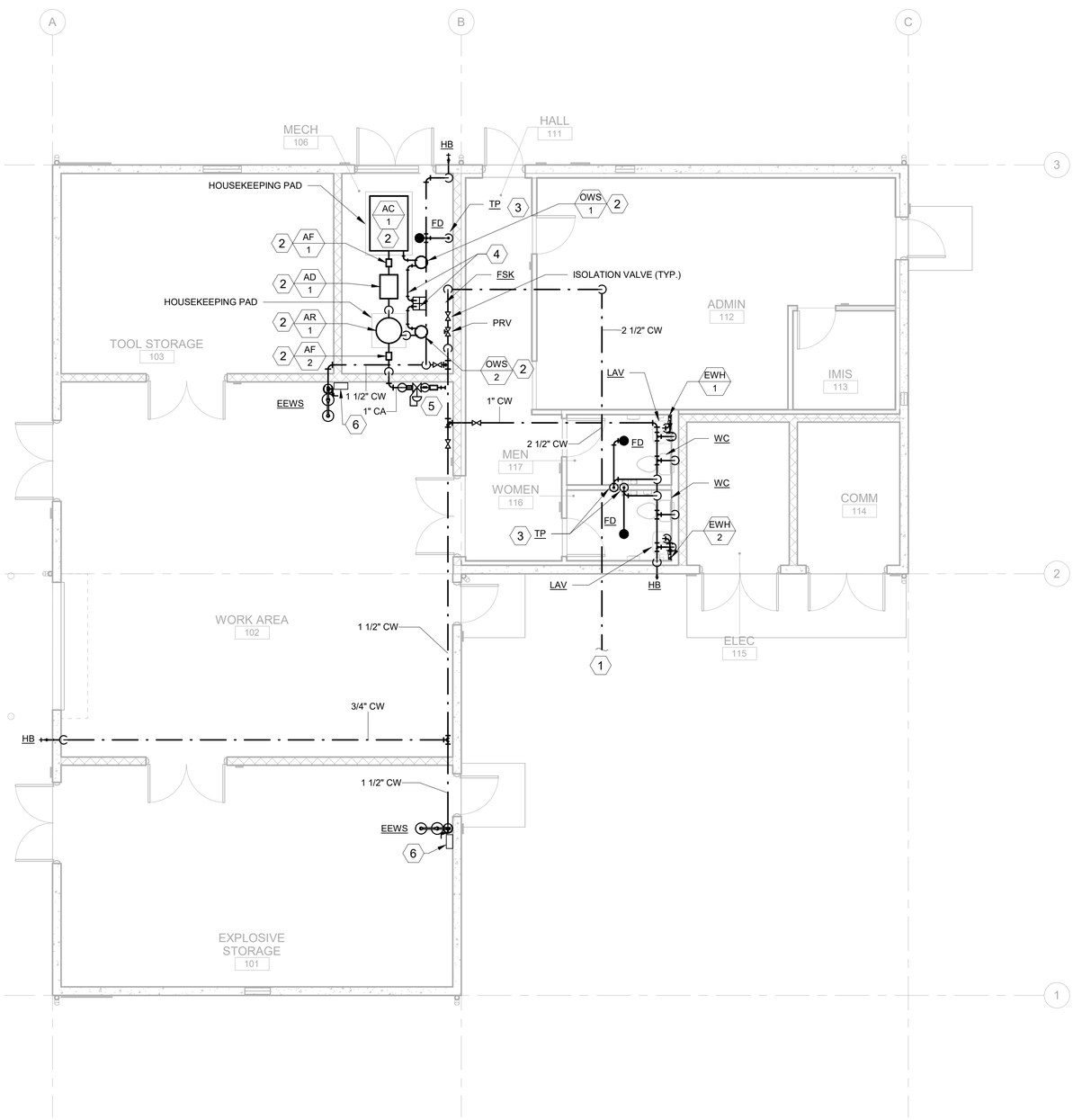

PLAN NORTH

0 2' 4' 8' 12'

A1 PLUMBING PLAN - DOMESTIC WATER AND COMPRESSED AIR

SCALE: 3/16" = 1'-0"

GENERAL NOTES

1. PROVIDE CW ROUGH-IN TO NEW LAV, WC, HB, EWH-1, EWH-2, AND EEWS.

KEYNOTES

1. SEE CIVIL FOR CONTINUATION.
2. PROVIDE NEW AC-1, AD-1, AR-1, OWS-1 & 2, AF-1 & 2.
3. PROVIDE TRAP PRIMER TO FLOOR DRAINS.
4. 1" CD PIPING TO TERMINATE AT FLOOR SINK.
5. COMPRESSED AIR OUTLET APPROXIMATELY 48" ABOVE FINISHED FLOOR.
6. REMOTE ALARM FOR EEWS.

US Army Corps of Engineers ®

MARK	DESCRIPTION	DATE

ISSUE DATE: 15 OCTOBER 2025
SOLICITATION NO.: W912BA22F0002
CONTRACT NO.: W912BA15B0012

DESIGNED BY: C. LI
DRAWN BY: R. BALIGNASAY
CHECKED BY:
QA VERIFIED BY:
SUBMITTED BY:
ISE
SIZE: ANSI D

US ARMY CORPS OF ENGINEERS
HONOLULU DISTRICT
FORT SHAFTER, OAHU, HAWAII

INSYNERGY ENGINEERING
1001 BISHOP STREET SUITE 2500
HONOLULU, HI 96813

JOINT BASE PEARL HARBOR-HICKAM, OAHU, HAWAII
FY22 HAWAII AIR NATIONAL GUARD (HIANG) F-22 PLUS-UP
ADD EGRESS SHOP
PROJECT NO.: KHND209087

PLUMBING PLAN - DOMESTIC WATER AND COMPRESSED AIR

SHEET ID

P-102

REVISED FINAL SUBMITTAL

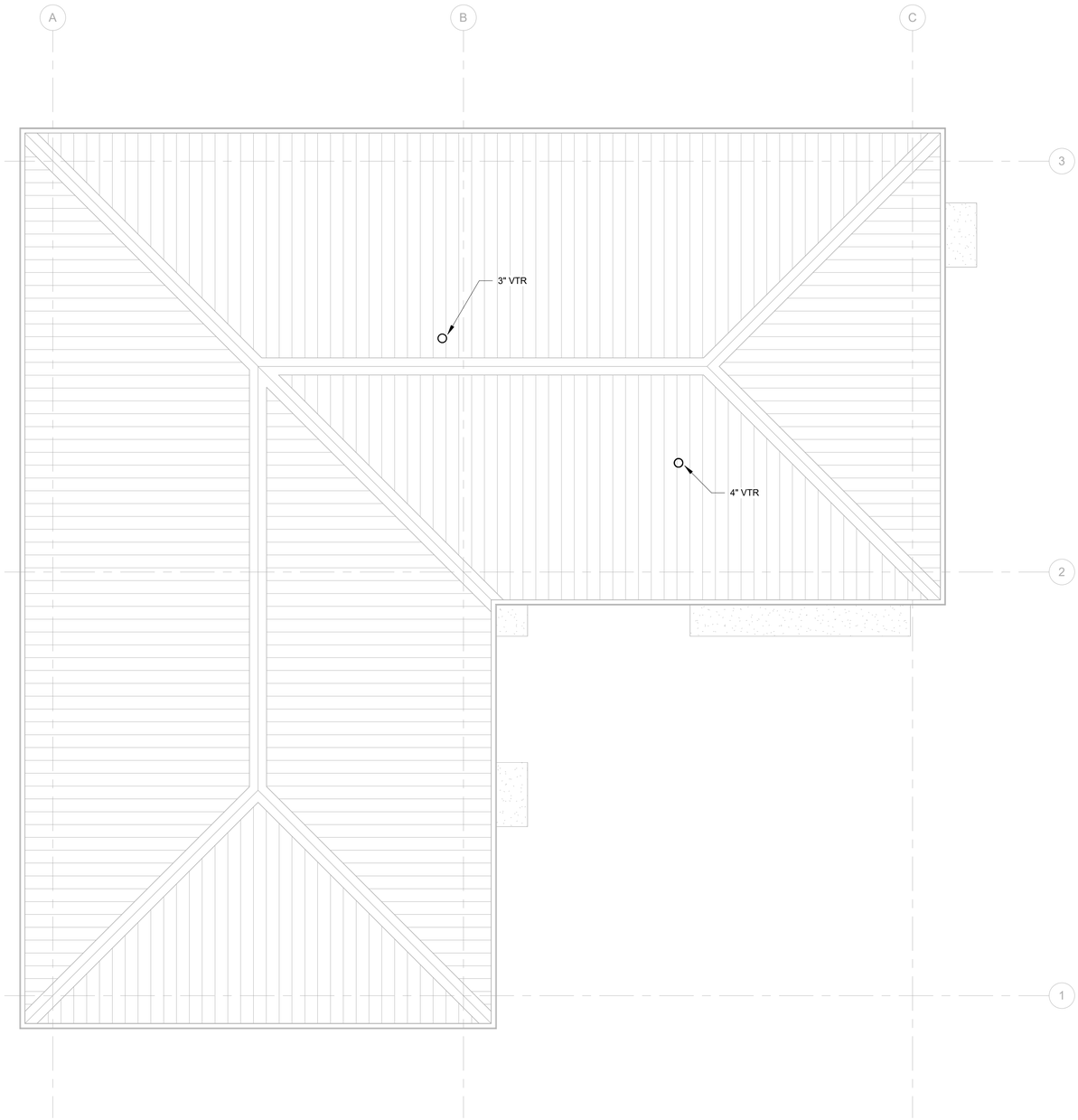

PLAN NORTH

0 2' 4' 8' 12'

A1 PLUMBING ROOF PLAN

SCALE: 3/16" = 1'-0"

US Army Corps of Engineers ®

MARK	DESCRIPTION	DATE

DESIGNED BY: C. LI
DRAWN BY: R. BALIGNASAY
CHECKED BY: J. VILLIERS
SUBMITTED BY: ISE
SIZE: ANSI D

ISSUE DATE: 15 OCTOBER 2025
SOLICITATION NO.: W9128A22F0002
CONTRACT NO.: W9128A19B0072

US ARMY CORPS OF ENGINEERS
HONOLULU DISTRICT
FORT SHAFTER, OAHU, HAWAII

INSYNERGY ENGINEERING
1001 BISHOP STREET SUITE 2500
HONOLULU, HI 96813

JOINT BASE PEARL HARBOR-HICKAM, OAHU, HAWAII
FY22 HAWAII AIR NATIONAL GUARD (HANG) F-22 PLUS-UP
ADD EGRESS SHOP
PROJECT NO.: KMND209087

PLUMBING ROOF PLAN

SHEET ID

P-103

REVISED FINAL SUBMITTAL

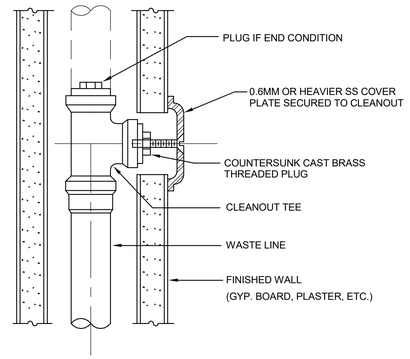

L4 WALL CLEANOUT DETAIL
SCALE: NTS

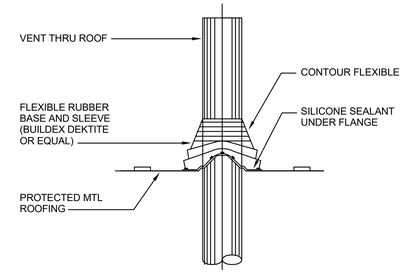

L10 VENT PENETRATION DETAIL - METAL ROOF
SCALE: NTS

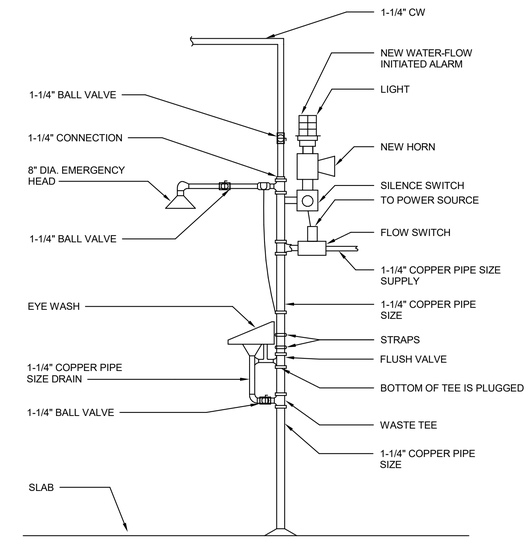

J16 EMERGENCY EYEWASH & SHOWER (EEWS) DETAIL
SCALE: NTS

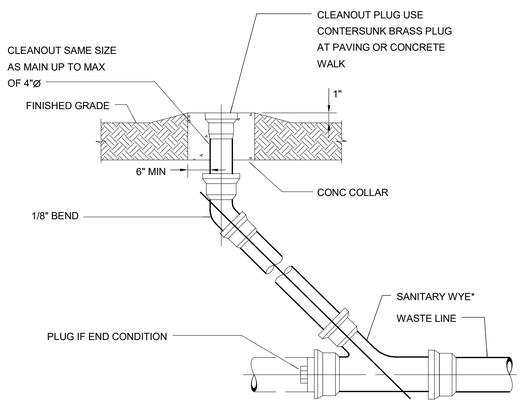

F4 CLEANOUT TO GRADE DETAIL
SCALE: NTS

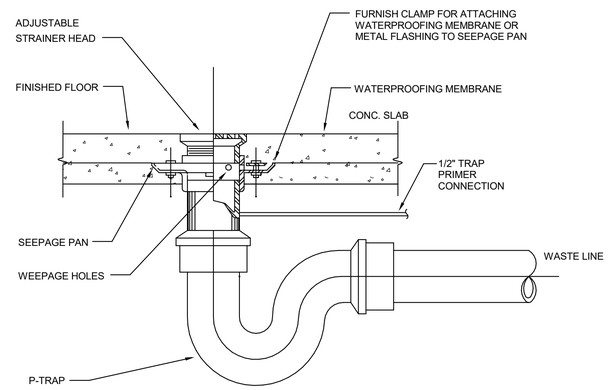

F9 TYPICAL FLOOR DRAIN DETAIL
SCALE: NTS

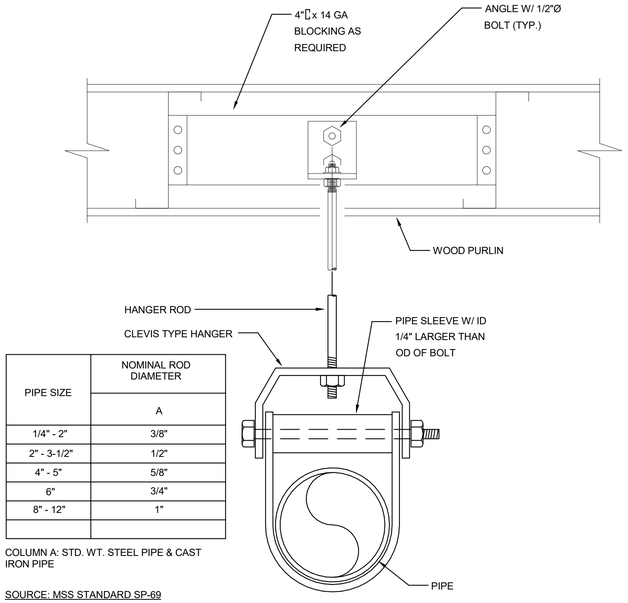

PIPE SIZE	NOMINAL ROD DIAMETER
	A
1/4" - 2"	3/8"
2" - 3-1/2"	1/2"
4" - 5"	5/8"
6"	3/4"
8" - 12"	1"

COLUMN A: STD. WT. STEEL PIPE & CAST IRON PIPE

SOURCE: MSS STANDARD SP-69

B15 TYPICAL PIPE HANGER DETAIL
SCALE: NTS

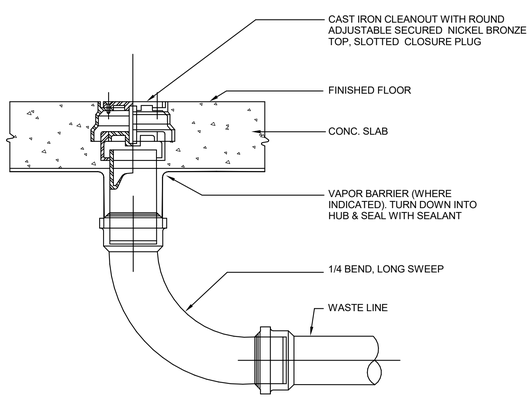

A4 TYPICAL FLOOR CLEANOUT DETAIL
SCALE: NTS

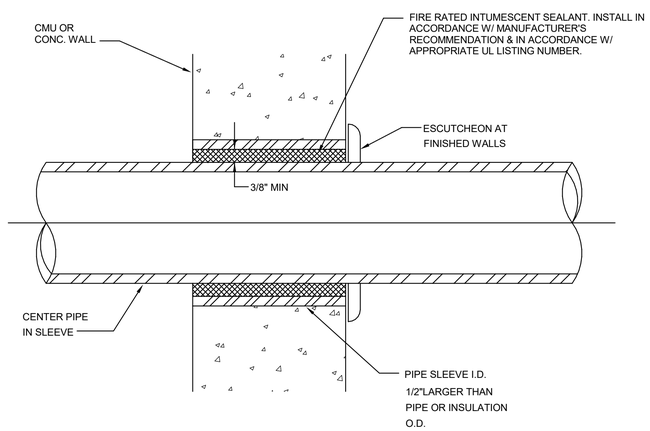

A9 PIPE THRU WALL DETAIL
SCALE: NTS

US Army Corps of Engineers ®

MARK	DESCRIPTION	DATE

ISSUE DATE: 15 OCTOBER 2025
SOLICITATION NO.: W912BA22F0002
CONTRACT NO.: W912BA19B0072

DESIGNED BY: C. Li
DRAWN BY: R. BALIGNASAY
CHECKED BY: Y. YIEN
SUBMITTED BY:
ISE
SIZE: ANSI D

US ARMY CORPS OF ENGINEERS
HONOLULU DISTRICT
FORT SHAFTER, OAHU, HAWAII

INSYNERGY ENGINEERING
1001 BISHOP STREET SUITE 2500
HONOLULU, HI 96813

JOINT BASE PEARL HARBOR-HICKAM, OAHU, HAWAII
FY'22 HAWAII AIR NATIONAL GUARD (HANG) F-22 PLUS-UP
ADD EGRESS SHOP
PROJECT NO.: KMND209087

PLUMBING DETAILS

SHEET ID
P-501

REVISED FINAL SUBMITTAL

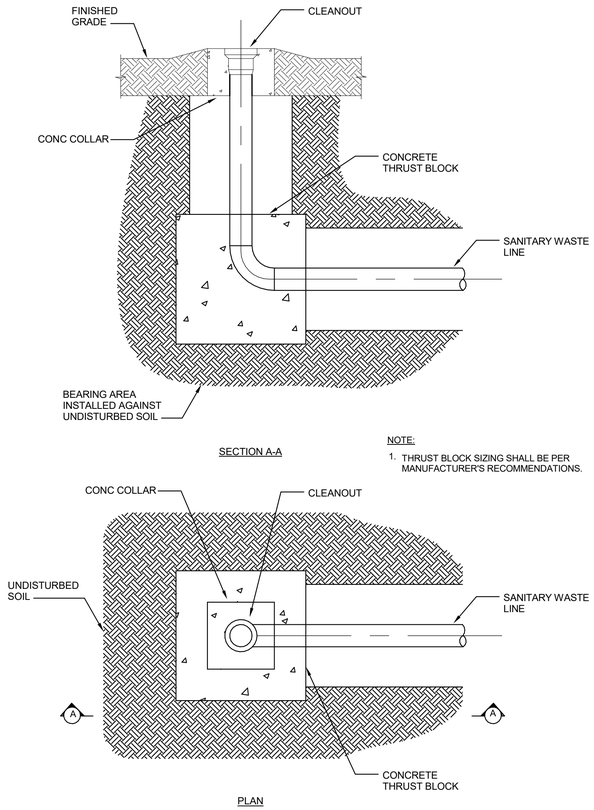

NOTE:

1. THRUST BLOCK SIZING SHALL BE PER MANUFACTURER'S RECOMMENDATIONS.

G1 THRUST BLOCK AT 90° ELBOW DETAIL

SCALE: NTS

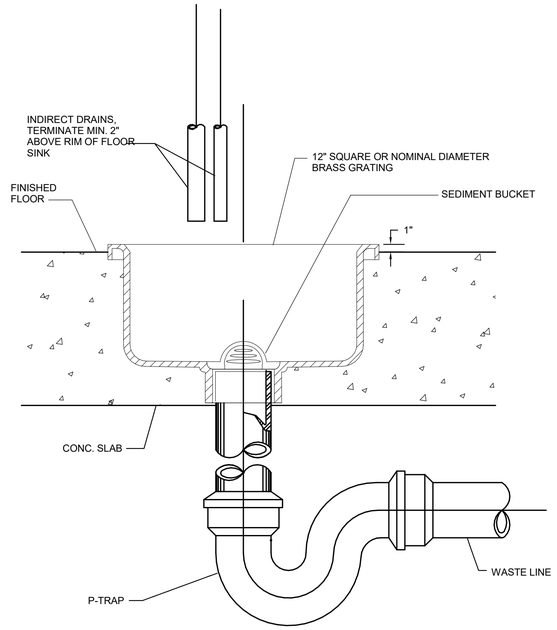

NOTE:

1. PROVIDE HALF GRATE FOR FLOOR SINKS RECEIVING INDIRECT WASTES, UNLESS OTHERWISE INDICATED.
2. SEE PLUMBING FIXTURE SCHEDULE FOR FLOOR SINK TYPES.
3. PROVIDE INSULATION FOR CONDENSATE FLOOR SINK.

F7 TYPICAL FLOOR SINK DETAIL

SCALE: NTS

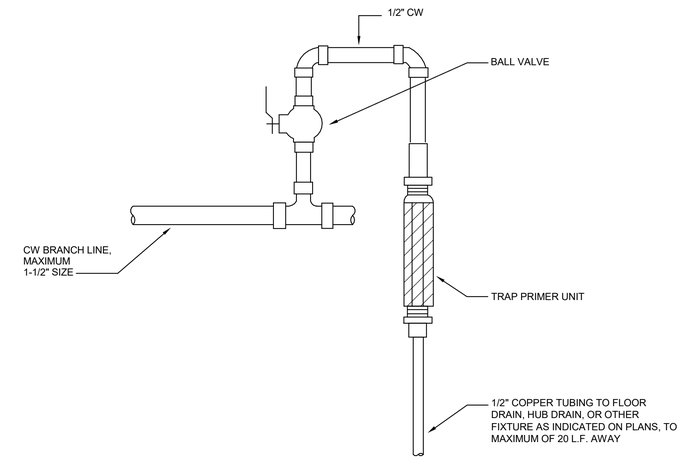

H14 TYPICAL TRAP PRIMER DETAIL

SCALE: NTS

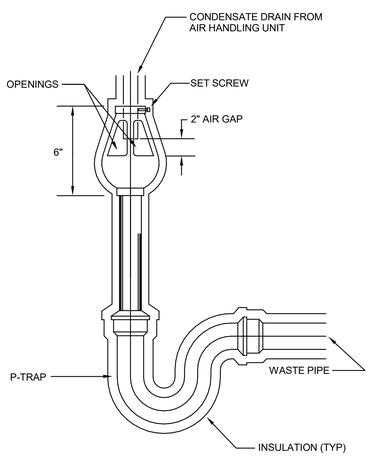

A1 AIR GAP RECEPTOR

SCALE: NTS

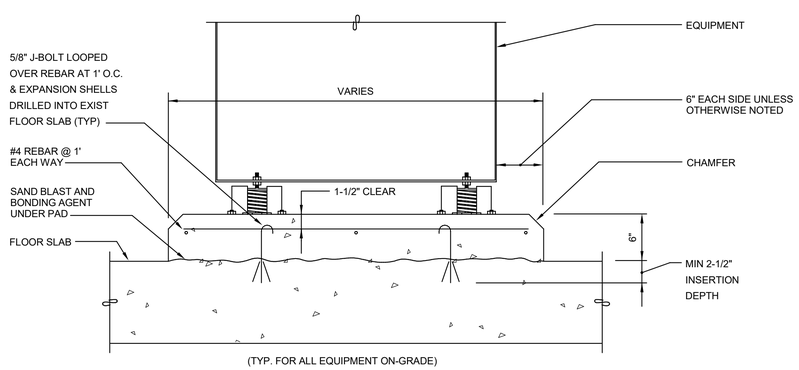

(TYP. FOR ALL EQUIPMENT ON-GRADE)

A5 EQUIPMENT MOUNTING DETAIL

SCALE: NTS

NOTE:

ALL DIMENSIONS AND/OR DIMENSIONS SHOWN IN CALLOUTS/NOTES ARE IN MILLIMETERS UNLESS OTHERWISE NOTED.

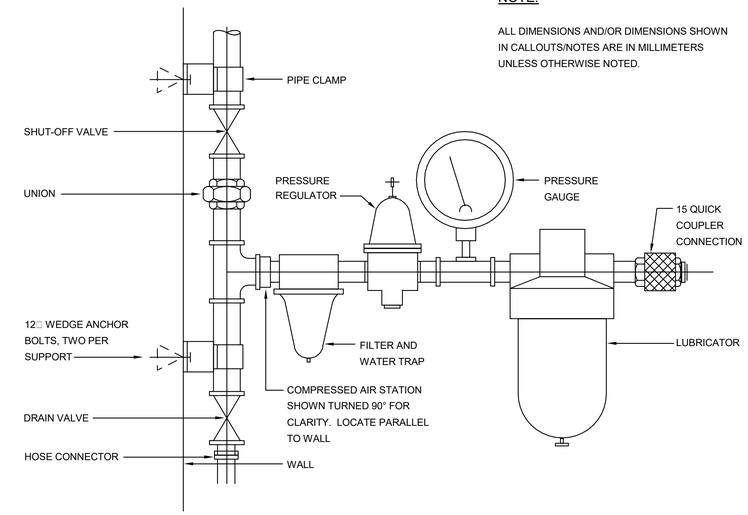

B13 COMPRESSED AIR OUTLET DETAIL

SCALE: NTS

US Army Corps of Engineers ®

MARK	DESCRIPTION	DATE

ISSUE DATE: 15 OCTOBER 2025
SOLICITATION NO.: W912BA22F0002
CONTRACT NO.: W912BA15B0012

DESIGNED BY: C. LI
DRAWN BY: R. BALIGNASAY
CHECKED BY: C. LI
REVIEWED BY: L. WU
SUBMITTED BY: ISE
SIZE: ANSI D

US ARMY CORPS OF ENGINEERS
HONOLULU DISTRICT
FORT SHAFTER, OAHU, HAWAII

INSYNERGY ENGINEERING
1001 BISHOP STREET SUITE 2500
HONOLULU, HI 96813

JOINT BASE PEARL HARBOR-HICKAM, OAHU, HAWAII
FY22 HAWAII AIR NATIONAL GUARD (HANG) F-22 PLUS-UP
ADD EGRESS SHOP
PROJECT NO.: KMND209087

PLUMBING DETAILS

SHEET ID

P-502

REVISED FINAL SUBMITTAL

INSTANTANEOUS ELECTRIC WATER HEATER SCHEDULE

TAG NO	LOCATION	TYPE	ELECTRICAL			HEATING CAPACITY (W)	ACTIVATION FLOWRATE (GPM)	TEMPERATURE RISE @ 1 GPM (F)	REMARKS
			V	PH	HZ				
EWH-1	117 MEN	INSTANTANEOUS ELECTRIC WATER HEATER	120	1	60	3600	0.35	25	PROVIDE WITH MIXING VALVE IN COMPLIANCE WITH ASSE 1070. SET LEAVING HOT WATER TEMPERATURE TO 120°F.
EWH-2	116 WOMEN	INSTANTANEOUS ELECTRIC WATER HEATER	120	1	60	3600	0.35	25	PROVIDE WITH MIXING VALVE IN COMPLIANCE WITH ASSE 1070. SET LEAVING HOT WATER TEMPERATURE TO 120°F.

AIR COMPRESSOR SCHEDULE

TAG NO	LOCATION	AIRFLOW (SCFM)	OPERATING PRESSURE (PSI)	POWER (HP)	PHASE	VOLTAGE	HERTZ	WEIGHT (LBS)	REMARKS
AC-1	106 MECH	30	150	2x 10	3	200	60	1545	PACKAGE WITH AIR COOLED AFTER COOLER, LOW OIL LEVEL CUT OFF SWITCH, 120 GALLON HORIZONTAL AIR RECEIVER, ELECTRIC AUTOMATIC CONDENSATE DRAIN VALVE.

REFRIGERATED AIR DRYER SCHEDULE

TAG NO	LOCATION	AIRFLOW (SCFM)	DEW POINT (°F)	kW	PHASE	VOLTAGE	HERTZ	WEIGHT (LBS)	REMARKS
AD-1	106 MECH	30	38	0.94	1	115	60	175	NEMA 1 RATED ELECTRICS.

AIR RECEIVER SCHEDULE

TAG NO	LOCATION	CAPACITY (GAL)	RATED PRESSURE (PSI)	WIDTH (IN)	HEIGHT (IN)	VOLTAGE	WEIGHT (LBS)	REMARKS
AR-1	106 MECH	120	200	24	77	120	234	WITH RELIEF VALVE AND AUTOMATIC DRAIN VALVE

PLUMBING FIXTURE SCHEDULE

QUANTITY	TAG	EQUIPMENT NAME	COLD WATER SIZE (IN)	HOT WATER SIZE (IN)	WASTE WATER SIZE (IN)	VENT SIZE (IN)	VOLT	REMARKS
2	EEWS	EMERGENCY EYE WASH SHOWER	1-1/2	-	-	-	120	PROVIDE WITH EMERGENCY ALARM AND LIGHT SYSTEM AND DUST COVER.
3	FD	FLOOR DRAIN	-	-	2	2	-	8" DIAMETER FLOOR DRAIN
1	FSK	FLOOR SINK	-	-	2	2	-	12"x12" FLOOR SINK WITH 10" SUMP DEPTH
3	HB	HOSE BIBB	3/4	-	-	-	-	PROVIDE WITH VACUUM BREAKER BACKFLOW PREVENTER
2	LAV	LAVATORY	1/2	1/2	1-1/2	1-1/2	-	PROVIDE A LOW FLOW WALL MOUNTED LAVATORY.
3	TP	TRAP PRIMER	1/2	-	-	-	-	
2	WC	WATER CLOSET	1	-	3	3	-	PROVIDE A LOW FLOW FLUSH TANK FLOOR MOUNTED WATER CLOSET.

COMPRESSED AIR FILTER SCHEDULE

TAG NO	LOCATION	DESCRIPTION
AF-1	106 MECH	COALESCING INLINE FILTER
AF-2	106 MECH	GENERAL PURPOSE INLINE FILTER

OIL WATER SEPARATOR SCHEDULE

TAG NO	LOCATION	INLET NPT (IN)	OUTLET NPT(IN)	WATER FLOW (GAL/HR)	WATER VOLUME (GAL)	REMARKS
OWS-1	103 MECH	0.5	0.5	0.55	1	
OWS-2	103 MECH	0.5	0.5	0.55	1	

US Army Corps of Engineers ®

MARK	DESCRIPTION	DATE

ISSUE DATE: 15 OCTOBER 2025
SOLICITATION NO.: W9128A22F0002
CONTRACT NO.: W9128A19B0072

DESIGNED BY: C. LI
DRAWN BY: R. BALIGNASAY
CHECKED BY: J. VIVAS
SUBMITTED BY: ISE
SIZE: ANSI D

US ARMY CORPS OF ENGINEERS
HONOLULU DISTRICT
FORT SHAFTER, OAHU, HAWAII

INSYNERGY ENGINEERING
1001 BISHOP STREET SUITE 2500
HONOLULU, HI 96813

JOINT BASE PEARL HARBOR-HICKAM, OAHU, HAWAII
FY22 HAWAII AIR NATIONAL GUARD (HANG) F-22 PLUS-UP
ADD EGRESS SHOP
PROJECT NO.: KMND209087

PLUMBING SCHEDULES

SHEET ID
P-601

REVISED FINAL SUBMITTAL

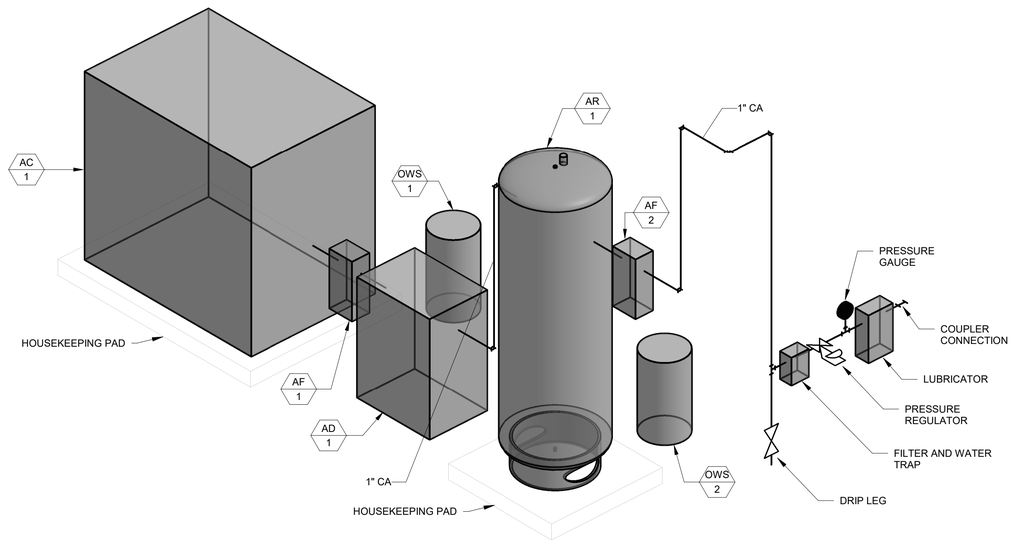

J1 PLUMBING ISOMETRIC - COMPRESSED AIR

SCALE: NTS

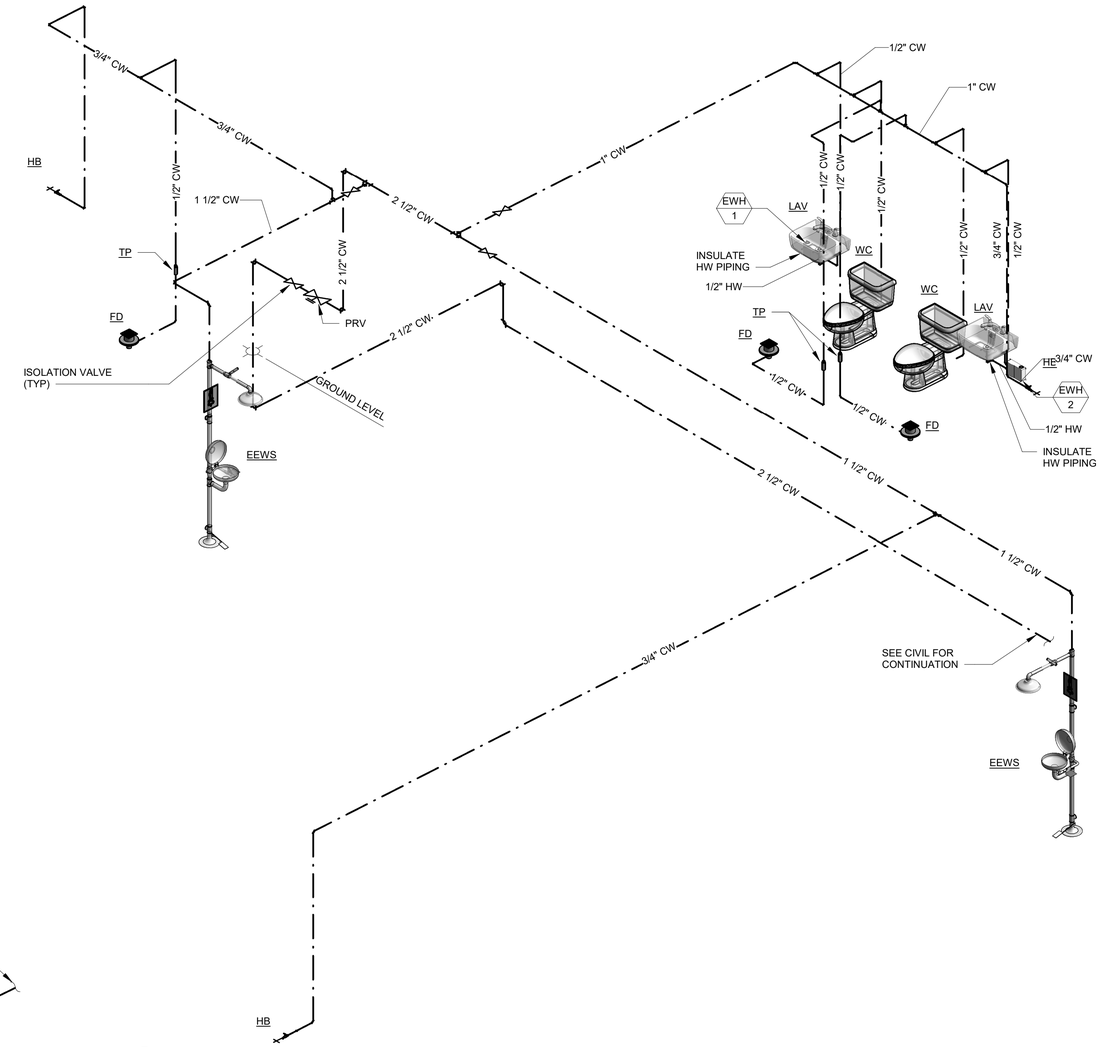

E11 PLUMBING ISOMETRIC - DOMESTIC WATER

SCALE: NTS

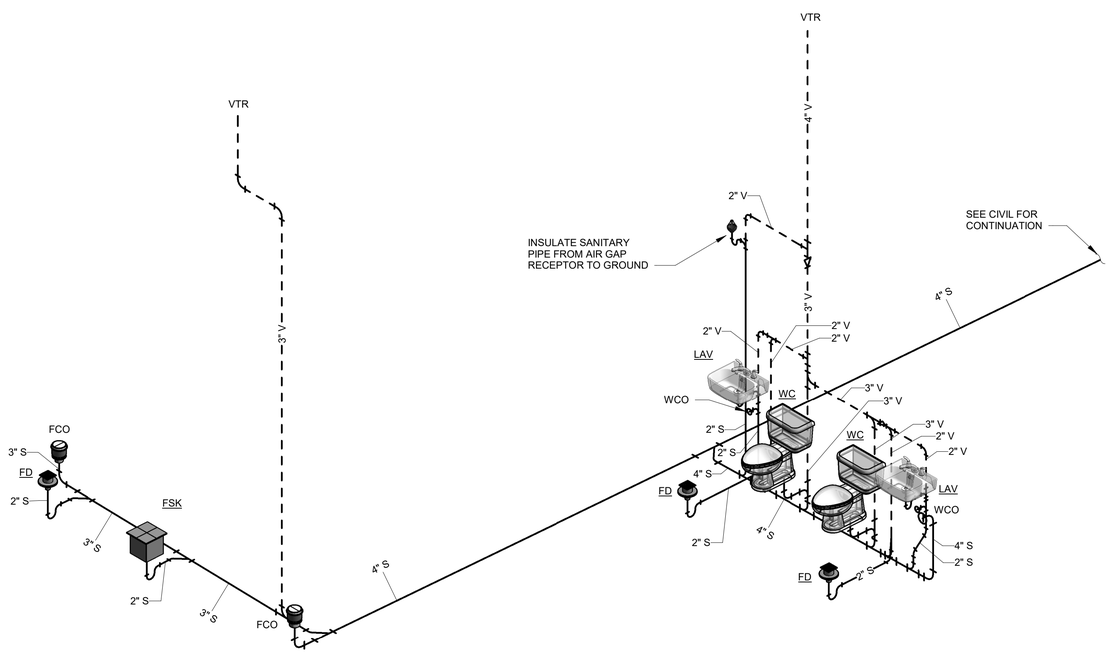

A1 PLUMBING ISOMETRIC - SANITARY

SCALE: NTS

US Army Corps of Engineers ®

MARK	DESCRIPTION	DATE

DESIGNED BY: C. LI
DRAWN BY: R. BALIGNASAY
CHECKED BY: J. VIVERA
SUBMITTED BY:
ISSUE DATE: 15 OCTOBER 2025
SOLICITATION NO.: W912BA22F0002
CONTRACT NO.: W912BA19B0012
SIZE: ANSI D

US ARMY CORPS OF ENGINEERS
HONOLULU DISTRICT
FORT SHAFTER, OAHU, HAWAII

INSYNERGY ENGINEERING
1001 BISHOP STREET SUITE 2500
HONOLULU, HI 96813

JOINT BASE PEARL HARBOR-HICKAM, OAHU, HAWAII
FY22 HAWAII AIR NATIONAL GUARD (HIANG) F-22 PLUS-UP
ADD EGRESS SHOP
PROJECT NO.: KMND209087

PLUMBING ISOMETRICS

SHEET ID

P-701

REVISED FINAL SUBMITTAL

GENERAL MECHANICAL NOTES

A. MECHANICAL LAYOUTS ARE SCHEMATIC. PROVIDE ANY ADDITIONAL DROPS, RISES, OR OFFSETS REQUIRED FOR A COMPLETE INSTALLATION. COORDINATE EXACT ROUTING OF WORK WITH ALL OTHER TRADES AND OBSTRUCTIONS. COORDINATE EXACT LOCATIONS OF CEILING MOUNTED WORK WITH LIGHTS, CEILING GRID, AND OTHER OBSTRUCTIONS.

B. UNLESS OTHERWISE INDICATED ROUTED, ROUTE ALL DUCTWORK AND PIPING ABOVE CEILINGS. ROUTE ALL DUCTWORK AND PIPING AS HIGH AS POSSIBLE IN AREAS WITHOUT CEILINGS. ROUTE ALL DUCTWORK AND PIPING TIGHT TO STRUCTURE.

C. DUCT DIMENSIONS ARE INSIDE CLEAR DIMENSIONS. INCREASE SHEET METAL DIMENSIONS ON LINED DUCTWORK TO MAINTAIN THE INSIDE CLEAR DIMENSIONS INDICATED.

D. UNLESS OTHERWISE INDICATED, PROVIDE DUCT RUNOUTS TO TERMINAL UNITS SAME SIZE AS TERMINAL UNIT INLET.

E. FLEXIBLE DUCT RUNOUTS TO TERMINAL AIR DEVICES SHALL BE SAME SIZE AS DIFFUSER CONNECTION. LIMIT FLEX TO 5 FEET.

F. INSTALL CALIBRATED BALANCING VALVES AND VENTURIS WITH A MINIMUM UNRESTRICTED STRAIGHT RUN OF 5 PIPE DIAMETERS UPSTREAM AND 3 PIPE DIAMETERS DOWNSTREAM.

G. SEE ARCHITECTURAL REFLECTED CEILING PLANS FOR EXACT LOCATIONS OF DIFFUSERS, PLENUM SLOT DIFFUSERS, REGISTERS, AND GRILLS.

H. ALL WORK INDICATED IS NEW.

I. SOME SYMBOLS INDICATED ON THIS LEGEND SHEET MAY NOT APPEAR OF THE DRAWINGS.

J. ALL PIPING LOW POINTS SHALL HAVE DRAIN VALVES WITH HOSE CONNECTION AND CAP.

K. ALL PIPING HIGH POINTS SHALL HAVE VALVED AIR VENTS.

L. PROVIDE 1-INCH DUCT LINER ON ALL TRANSFER DUCT.

M. CONDENSATE DRAINS SHALL HAVE A MINIMUM SLOPE OF 2%.

N. SEISMICALLY BRACE ALL EQUIPMENT, PIPING, AND DUCTWORK IN ACCORDANCE WITH ASCE 7-16. PROVIDE SHAKE TABLE TESTING OF ALL EQUIPMENT IN ACCORDANCE WITH ASCE 7-16.

DAMPERS

- MANUAL BALANCING DAMPER
- BD — BACKDRAFT DAMPER
- FD — FIRE DAMPER
- SD — SMOKE DAMPER
- FSD — COMBINATION FIRE/SMOKE DAMPER
- M — MOTORIZED DAMPER
- C — MODULATING CONTROL DAMPER WITH AIR FLOW STATION

DUCTWORK

- FLEXIBLE ROUND DUCT
- 2 1 — CHANGE IN DUCT CONSTRUCTION BY PRESSURE CLASS. (PRESSURES IN INCHES W.G)
- FLEXIBLE DUCT CONNECTION
- ACOUSTICALLY LINED DUCT
- SA — SOUND ATTENUATOR
- BRANCH TAKEOFF

GENERAL CONTROL SYMBOLOGY

- T — THERMOSTAT
- T S — TEMPERATURE SENSOR
- HS — HUMIDITY SENSOR
- H — HUMIDISTAT
- PS — DUCT PRESSURE SENSOR
- CD — CARBON MONOXIDE DETECTOR
- SD — SMOKE DETECTOR
- W — WATER METER
- E — ELECTRIC METER
- ATFP — EMERGENCY HVAC SHUT DOWN SWITCH
- N — NIGHT THERMOSTAT
- C — MODULATING CONTROL DAMPER WITH AIR FLOW MEASURING STATION
- M — LOW LEAKAGE MOTORIZED DAMPER

DIFFUSER, REGISTER AND GRILLE NOTATION

DUCT SIZE IN INCHES
(NET INSIDE DIMENSIONS)
(RECTANGULAR DUCT SHOWN)
DIA INDICATES ROUND DUCT.
DIAO. INDICATES OVAL DUCT.
FOR RECTANGULAR DUCT:
FIRST FIGURE: SIDE SHOWN
SECOND FIGURE: SIDE NOT SHOWN

36x24

AIR QUANTITY (CFM)

S1 900

DEVICE IDENTIFICATION

ARROWS INDICATE FLOW DIRECTION

- SUPPLY DIFFUSER
- RETURN REGISTER OR GRILLE
- EXHAUST REGISTER OR GRILLE
- SUPPLY REGISTER OR GRILLE, SIDEWALL
- RETURN/EXHAUST REGISTER OR GRILLE, SIDEWALL

PIPING SYSTEMS

- DOMESTIC COLD WATER
- DOMESTIC HOT WATER
- DOMESTIC HOT WATER RETURN
- SS — SANITARY SEWER
- VENT
- G — NATURAL GAS
- F — FIRE PROTECTION
- NPW — NON-POTABLE WATER
- HRR — HEAT RECOVERY RETURN
- HRS — HEAT RECOVERY SUPPLY
- EXISTING PIPING TO BE REMOVED
- CHS — CHILLED WATER SUPPLY
- CHR — CHILLED WATER RETURN
- HWS — HEATING WATER SUPPLY
- HWR — HEATING WATER RETURN
- CD — CONDENSATE DRAIN
- RS — REFRIGERANT SUCTION
- RL — REFRIGERANT LIQUID
- RD — ROOF DRAIN
- MU — MAKE-UP WATER
- (E) — EXISTING PIPING TO REMAIN

PIPING SYMBOLS

- CONTINUATION
- DROP IN PIPE
- VALVE IN RISER
- ELBOW, 90 DEG.
- ELBOW UP, 90 DEG.
- ELBOW DOWN, 90 DEG.
- ELBOW, 45 DEG.
- TEE
- UNION
- UNION, FLANGED
- TEE, OUTLET TURNED DOWNWARD
- TEE, OUTLET TURNED UPWARD
- PIPE PITCH
- PRV — PRESSURE RELIEF VALVE
- PRESSURE REDUCING VALVE
- TPRV — TEMP & PRESS RELIEF
- PA — ANCHOR
- BALL VALVE
- GLOBE VALVE
- GATE VALVE
- CHECK VALVE
- PLUG VALVE
- DOUBLE CHECK VALVE BACKFLOW PREVENTER
- FIRE DEPARTMENT CONNECTION
- PRESSURE GAGE WITH SHUT OFF COCK AND SIPHON OR PULSATION DAMPENER
- CAP
- FD — FLOOR DRAIN WITH TRAP
- DIRECTION OF FLOW
- FLOOR PENETRATION
- WH — WALL HYDRANT
- WCO — WALL CLEANOUT
- HB — HOSE BIB
- THERMOMETER
- AV — AIR VENT, AUTOMATIC
- AIR VENT, MANUAL
- EL — EXPANSION LOOP
- PG — GUIDE
- EXPANSION JOINT
- FLEXIBLE CONNECTOR
- PT — PRESSURE/TEMPERATURE TEST PORT
- BALL JOINT
- FS — FLOOR SINK WITH TRAP
- WFD — WATER FLOW DETECTOR
- CALIBRATED BALANCING VALVE
- AUTOMATIC FLOW CONTROL VALVE
- BUTTERFLY VALVE
- MODULATING TWO-WAY
- MODULATING THREE-WAY
- REDUCED PRESSURE BACKFLOW PREVENTER
- OS&Y VALVE
- THERMOMETER GAGE
- BLIND FLANGE

MECHANICAL ABBREVIATIONS

AFF	- ABOVE FINISHED FLOOR
BOD	- BOTTOM OF DUCT ELEV.
BOP	- BOTTOM OF PIPE ELEV.
CFM	- CUBIC FEET PER MINUTE
CL	- CENTERLINE
CLG	- CEILING
COND	- CONDENSATE/CONDENSER
CONN	- CONNECTION/CONNECT
DB	- DRY BULB TEMPERATURE
DDC	- DIRECT DIGITAL CONTROL
DX	- DIRECT EXPANSION
EA	- EXHAUST AIR
EAT	- ENTERING AIR TEMP.
ELEV	- ELEVATION
EMCS	- ENERGY MONITORING AND CONTROL SYSTEM
ESP	- EXTERNAL STATIC PRESSURE
EWT	- ENTERING WATER TEMP.
FC	- FAIL CLOSED
FD	- FLOOR DRAIN
FLA	- FULL LOAD AMPS
FO	- FAIL OPEN
GA	- GAUGE
HD	- HUB DRAIN
IE	- INVERT ELEVATION
LAT	- LEAVING AIR TEMP.
LWT	- LEAVING WATER TEMP.
NC	- NORMALLY CLOSED
NO	- NORMALLY OPEN
NPS	- NOMINAL PIPE SIZE
NPT	- NATIONAL PIPE THREAD
NTS	- NOT TO SCALE
OA	- OUTSIDE AIR
OBD	- OPPOSED BLADE DAMPER
OS&Y	- OUTSIDE STEM AND YORK
Pa	- PASCAL
PD	- PRESSURE DROP
RA	- RETURN AIR
RPM	- REVOLUTIONS PER MINUTE
SA	- SUPPLY AIR
SOG	- SLAB ON GRADE
SP	- STATIC PRESSURE
TOD	- TOP OF DUCT ELEVATION
TOP	- TOP OF PIPE ELEVATION
TOS	- TOP OF SLAB/ TOP OF STEEL
TSP	- TOTAL STATIC PRESSURE
VAV	- VARIABLE AIR VOLUME
VP	- VELOCITY PRESSURE
VTR	- VENT THRU ROOF
W	- WATTS
WB	- WET BULB
WC	- WATER COLUMN
WG	- WATER GAUGE

REFERENCE SYMBOLOGY

NN ZZ — DETAIL LOCATION

DETAIL NO.

NN ZZ — DETAIL LOCATION

REF: DET.NN/MZZ

- 000 — ROOM NUMBER
- Ø — ROUND DUCT
- POINT OF CONNECTION BETWEEN NEW AND EXISTING WORK
- EXISTING WORK TO BE REMOVED
- EXISTING WORK TO REMAIN
- POINT BETWEEN WORK TO REMAIN AND WORK TO BE REMOVED

US Army Corps of Engineers ®

MARK	DESCRIPTION	DATE

ISSUE DATE: 15 OCTOBER 2025
SOLICITATION NO.: W912BA22F0002
CONTRACT NO.: W912BA19B0012

DESIGNED BY: C. LI
DRAWN BY: R. BALIGNASAY
CHECKED BY: J. LOVELL
SUBMITTED BY: ISE
SIZE: ANSI D

US ARMY CORPS OF ENGINEERS
HONOLULU DISTRICT
FORT SHAFTER, OAHU, HAWAII

INSYNERGY ENGINEERING
1001 BISHOP STREET SUITE 2500
HONOLULU, HI 96813

JOINT BASE PEARL HARBOR-HICKAM, OAHU, HAWAII
FY22 HAWAII AIR NATIONAL GUARD (HANG) F-22 PLUS-UP
ADD EGRESS SHOP
PROJECT NO.: KMND209087

MECHANICAL GENERAL NOTES, ABBREVIATIONS

SHEET ID
M-001

REVISED FINAL SUBMITTAL

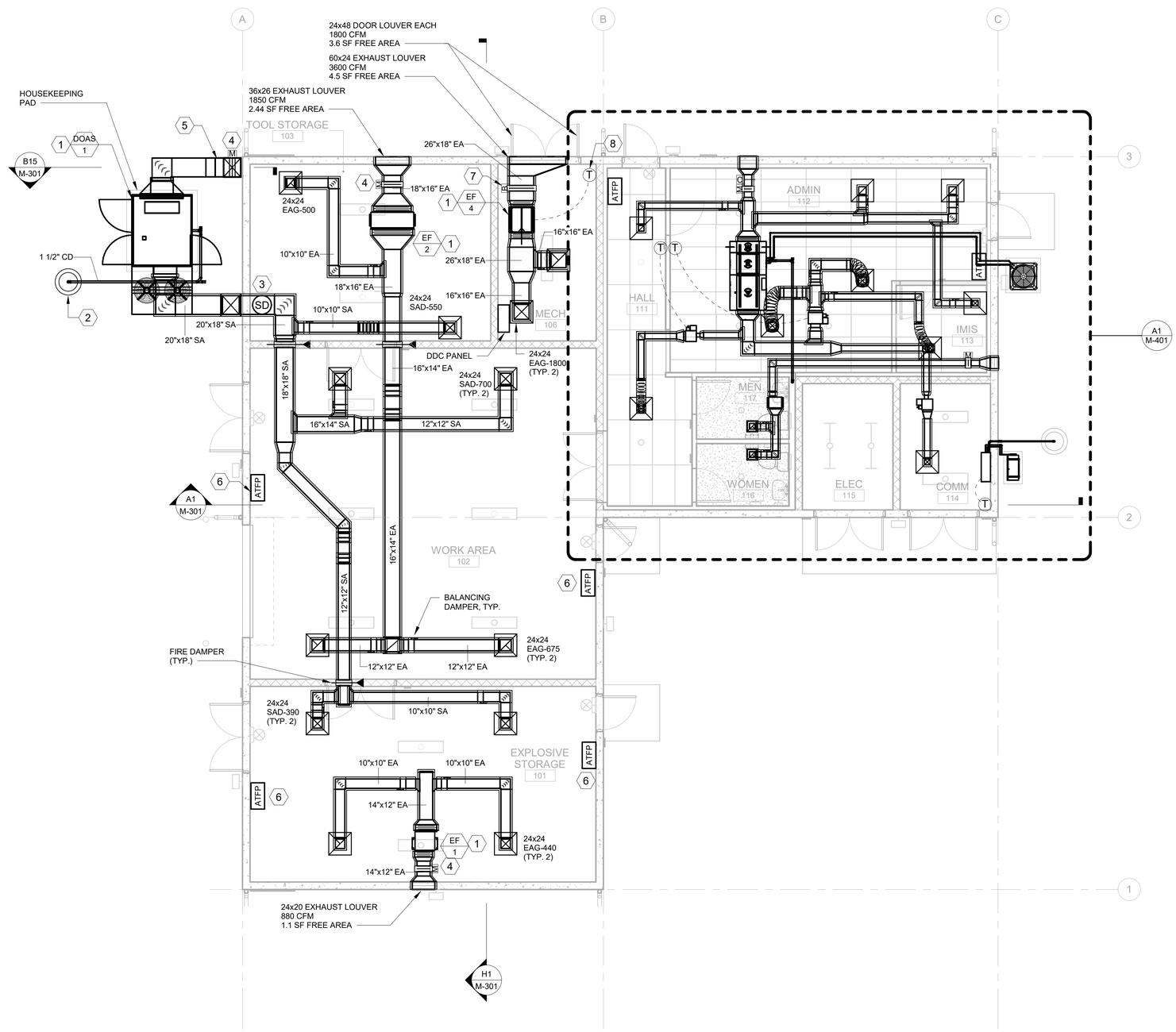

A1 OVERALL MECHANICAL PLAN

SCALE: 3/16" = 1'-0"

0 2' 4' 8' 12'

GENERAL NOTES

1. ALL LOUVERS TO THE BUILDING EXTERIOR SHALL BE MINIMUM 10' ABOVEGROUND.

KEYNOTES

1. PROVIDE NEW DOAS-1, EF-1, EF-2, AND EF-4.
2. PROVIDE NEW 24" DIAMETER SEEPAGE PIT.
3. PROVIDE NEW DUCT SMOKE DETECTOR.
4. PROVIDE LOW LEAKAGE MOTORIZED DAMPER.
5. PROVIDE STAINLESS STEEL BIRDSCREEN ON DOAS-1 OUTSIDE AIR INTAKE. OUTSIDE AIR DUCT TO DOAS-1 SHALL BE MINIMUM 10' ABOVEGROUND.
6. PROVIDE AT/FP HVAC EMERGENCY SHUT-OFF BUTTON. MOUNT 48 INCHES AFF.
7. PROVIDE BACKDRAFT DAMPER.
8. PROVIDE T-STAT.

US Army Corps of Engineers ®

MARK	DESCRIPTION	DATE

ISSUE DATE: 15 OCTOBER 2025
SOLICITATION NO.: W912BA22F0002
CONTRACT NO.: W912BA15B0012

DESIGNED BY: C. LI
DRAWN BY: R. BALIGNASAY
CHECKED BY:
QA VERIFIED BY:
SUBMITTED BY:
ISE
SIZE: ANSI D

US ARMY CORPS OF ENGINEERS
HONOLULU DISTRICT
FORT SHAFTER, OAHU, HAWAII

INSYNERGY ENGINEERING
1001 BISHOP STREET SUITE 2500
HONOLULU, HI 96813

JOINT BASE PEARL HARBOR-HICKAM, OAHU, HAWAII
FY22 HAWAII AIR NATIONAL GUARD (HANG) F-22 PLUS-UP
ADD EGRESS SHOP
PROJECT NO.: KMND209087

OVERALL MECHANICAL PLAN

SHEET ID

M-101

REVISED FINAL SUBMITTAL

KEYNOTES

1. PROVIDE LOW LEAKAGE MOTORIZED DAMPER.
2. PROVIDE STAINLESS STEEL BIRDSCREEN ON DOAS-1 OUTSIDE AIR INTAKE. OUTSIDE AIR DUCT TO DOAS-1 SHALL BE MINIMUM 10' ABOVEGROUND.
3. MOUNT FAN COIL UNIT BELOW TELECOM CABLE TRAY.

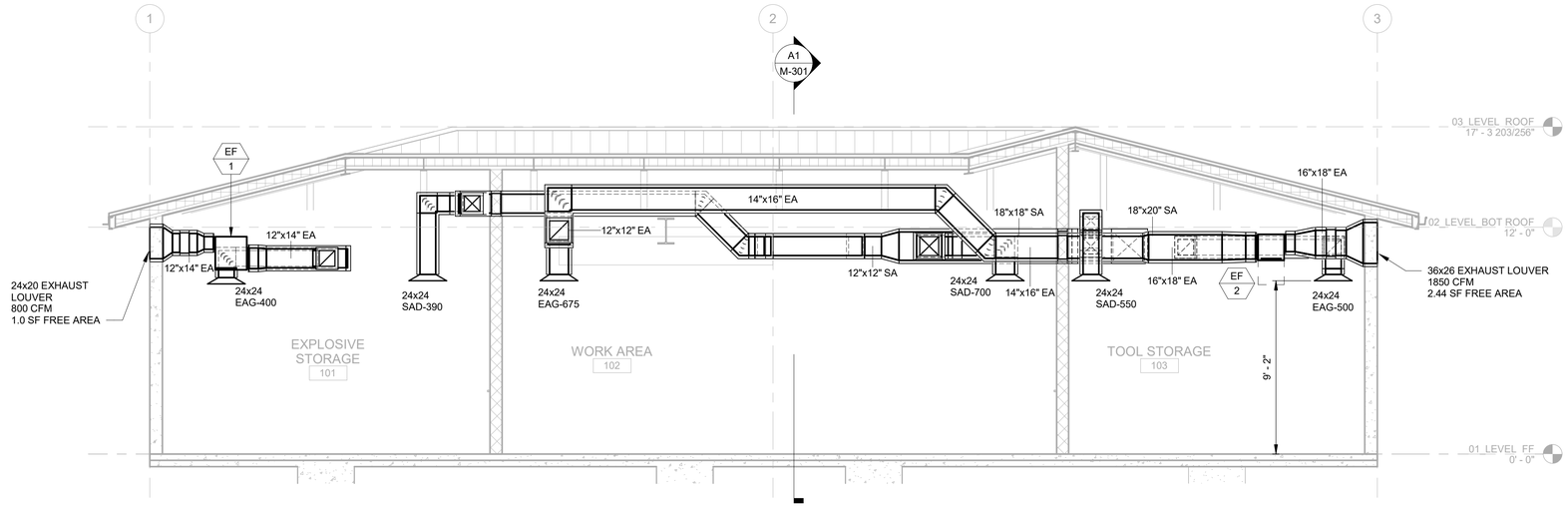

H1 MECHANICAL SECTION 3
SCALE: 1/4" = 1'-0"

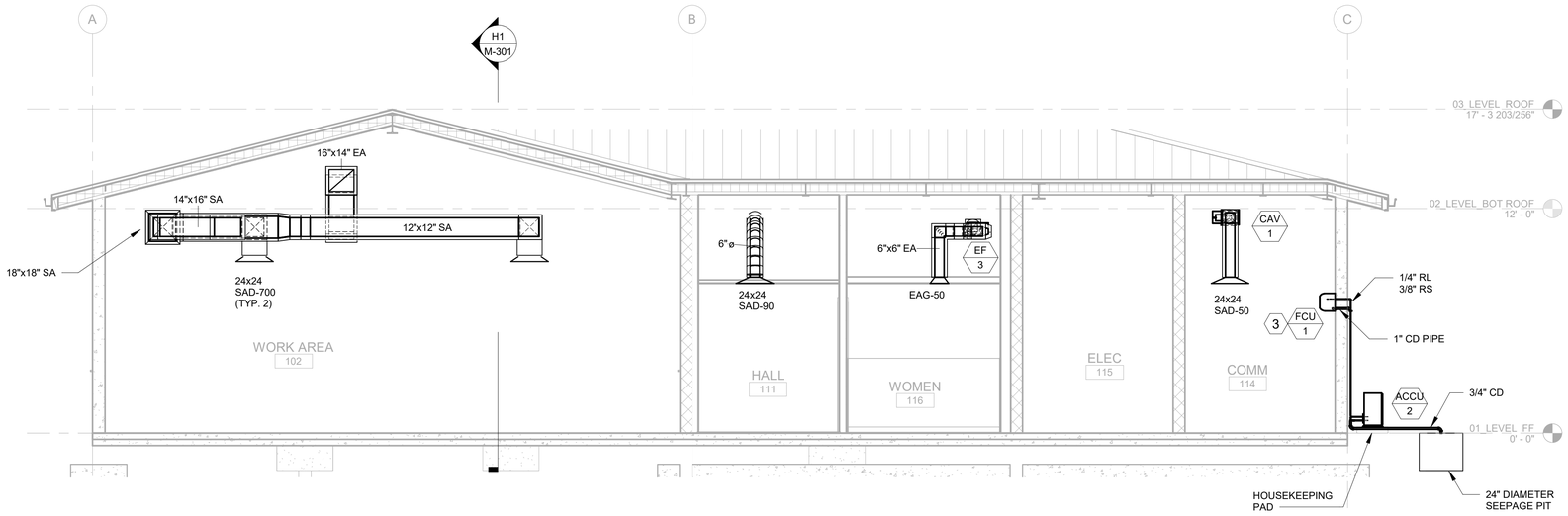

A1 MECHANICAL SECTION 2
SCALE: 1/4" = 1'-0"

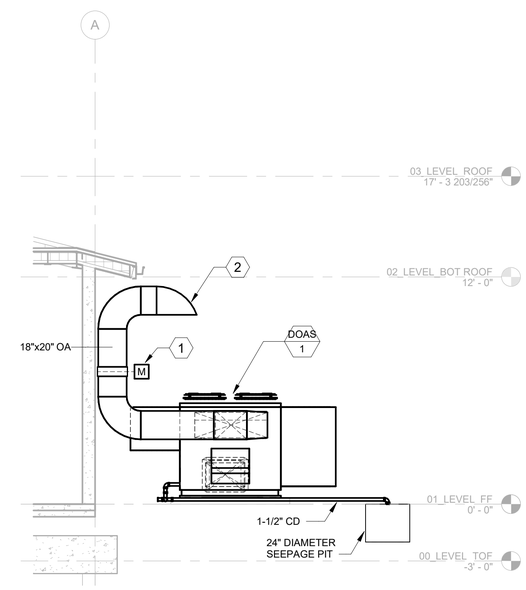

B15 MECHANICAL SECTION 1
SCALE: 1/4" = 1'-0"

US Army Corps of Engineers ®

MARK	DESCRIPTION	DATE

DESIGNED BY: C. LI
DRAWN BY: R. BALIGNASAY
CHECKED BY: J. VIVERA
SUBMITTED BY:
ISSUE DATE: 15 OCTOBER 2025
SOLICITATION NO.: W9128A22F0002
CONTRACT NO.: W9128A19B0072
ISE
SIZE: ANSI D

US ARMY CORPS OF ENGINEERS
HONOLULU DISTRICT
FORT SHAFTER, OAHU, HAWAII

INSYNERGY ENGINEERING
1001 BISHOP STREET SUITE 2500
HONOLULU, HI 96813

JOINT BASE PEARL HARBOR-HICKAM, OAHU, HAWAII
FY22 HAWAII AIR NATIONAL GUARD (HANG) F-22 PLUS-UP
ADD EGRESS SHOP
PROJECT NO.: KMND209087

MECHANICAL SECTIONS

SHEET ID
M-301

REVISED FINAL SUBMITTAL

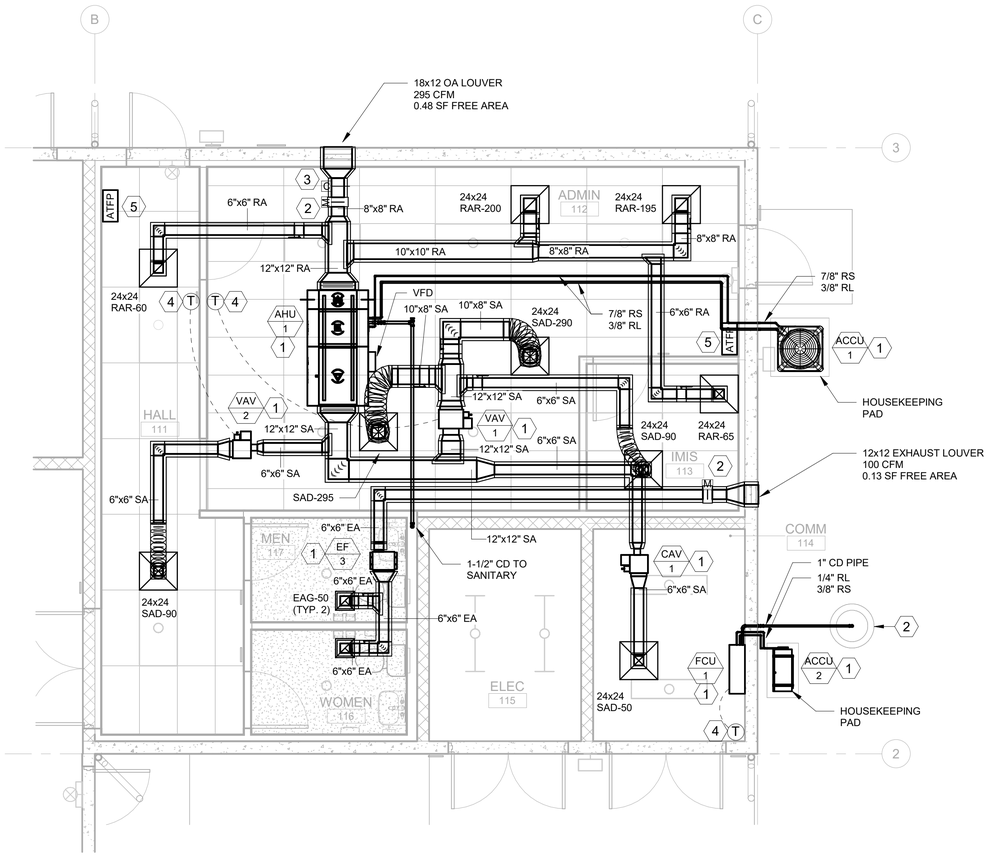

PLAN NORTH

0 2' 4' 8'

A1 ENLARGED MECHANICAL PLAN

SCALE: 1/4" = 1'-0"

KEYNOTES

1. PROVIDE NEW AHU-1, FCU-1, ACCU 1 &2, EF-3, AND VAV 1,2, & 3.
2. PROVIDE LOW LEAKAGE MOTORIZED DAMPER.
3. PROVIDE MODULATING CONTROL DAMPER WITH AIR FLOW MEASURING STATION.
4. PROVIDE T-STAT.
5. PROVIDE AT/FP HVAC EMERGENCY SHUT-OFF BUTTON. MOUNT 48 INCHES AFF.

US Army Corps of Engineers ®

MARK	DESCRIPTION	DATE

ISSUE DATE: 15 OCTOBER 2025
SOLICITATION NO.: W9128A22F0002
CONTRACT NO.: W9128A19B0072

DESIGNED BY: C. LI
DRAWN BY: R. BALIGNASAY
CHECKED BY: J. VIVEIROS
SUBMITTED BY: ISE
SIZE: ANSI D

US ARMY CORPS OF ENGINEERS
HONOLULU DISTRICT
FORT SHAFTER, OAHU, HAWAII

INSYNERGY ENGINEERING
1001 BISHOP STREET SUITE 2500
HONOLULU, HI 96813

JOINT BASE PEARL HARBOR-HICKAM, OAHU, HAWAII
FY22 HAWAII AIR NATIONAL GUARD (HANG) F-22 PLUS-UP
ADD EGRESS SHOP
PROJECT NO.: KMND209087

ENLARGED MECHANICAL PLAN

SHEET ID

M-401

REVISED FINAL SUBMITTAL

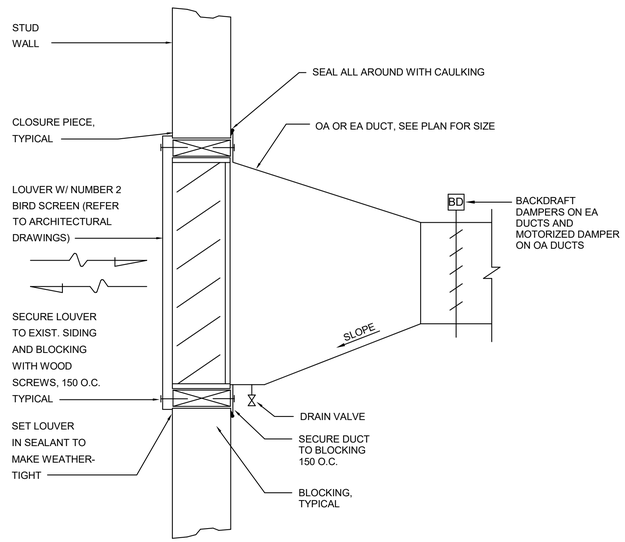

H5 LOUVER DETAIL

SCALE: NTS

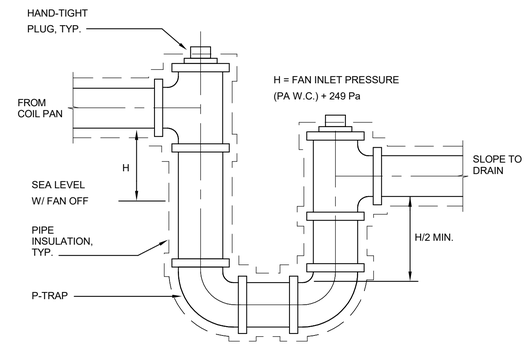

H11 TYPICAL CONDENSATE TRAP DETAIL

SCALE: NTS

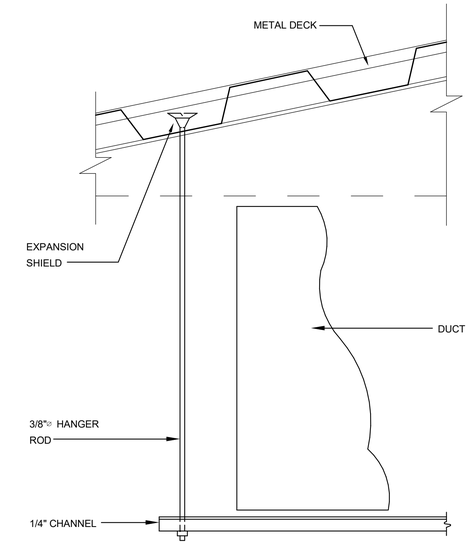

H16 TYPICAL HORIZONTAL DUCT SUPPORT

SCALE: NTS

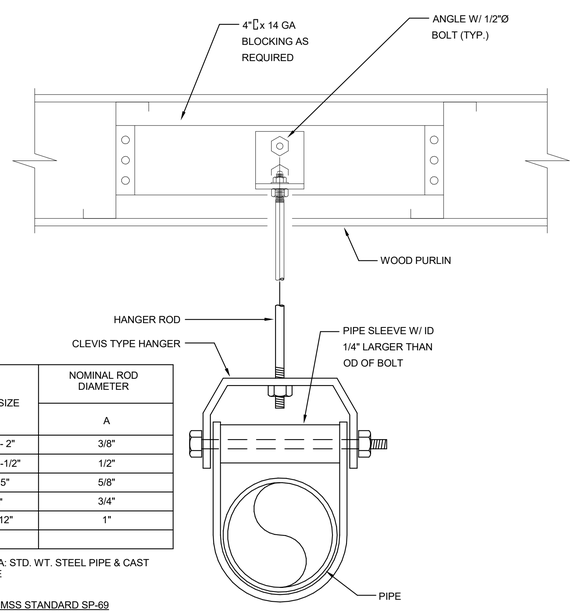

PIPE SIZE	NOMINAL ROD DIAMETER
	A
1/4" - 2"	3/8"
2" - 3-1/2"	1/2"
4" - 5"	5/8"
6"	3/4"
8" - 12"	1"

COLUMN A: STD. WT. STEEL PIPE & CAST IRON PIPE

SOURCE: MSS STANDARD SP-69

A1 PIPE HANGER DETAIL

SCALE: NTS

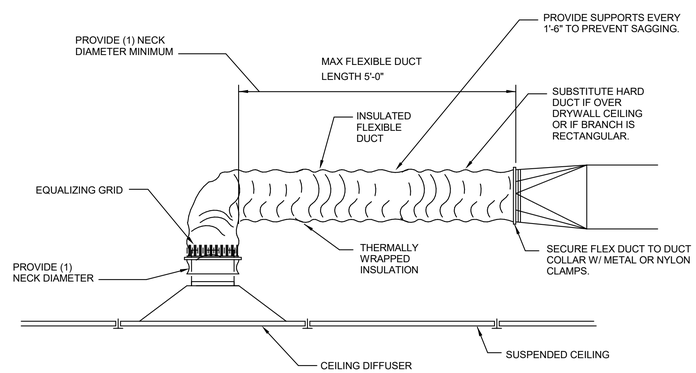

A7 CEILING DIFFUSER DETAIL

SCALE: NTS

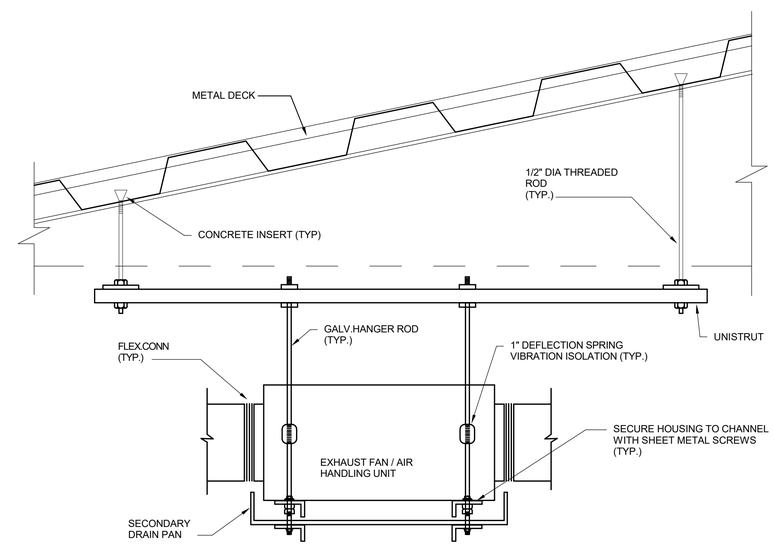

A14 AHU AND FAN MOUNTING DETAIL WITH SEISMIC RESTRAINT

SCALE: NTS

US Army Corps of Engineers ®

MARK	DESCRIPTION	DATE

ISSUE DATE: 15 OCTOBER 2025
SOLICITATION NO.: W912BA22F0002
CONTRACT NO.: W912BA19B0012

DESIGNED BY: C. LI
DRAWN BY: R. BALIGNASAY
CHECKED BY: J. VIVERO
SUBMITTED BY:
ISE
SIZE: ANSI D

US ARMY CORPS OF ENGINEERS
HONOLULU DISTRICT
FORT SHAFTER, OAHU, HAWAII

INSYNERGY ENGINEERING
1001 BISHOP STREET SUITE 2500
HONOLULU, HI 96813

JOINT BASE PEARL HARBOR-HICKAM, OAHU, HAWAII
FY22 HAWAII AIR NATIONAL GUARD (HANG) F-22 PLUS-UP
ADD EGRESS SHOP
PROJECT NO.: KMND209087

MECHANICAL DETAILS

SHEET ID

M-501

REVISED FINAL SUBMITTAL

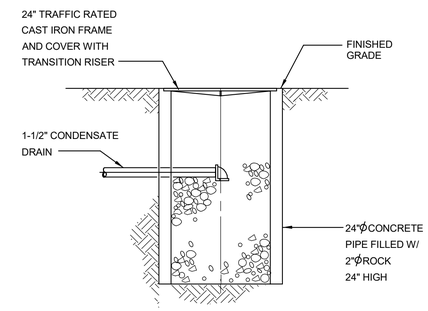

G16 SEEPAGE PIT DETAIL
SCALE: NTS

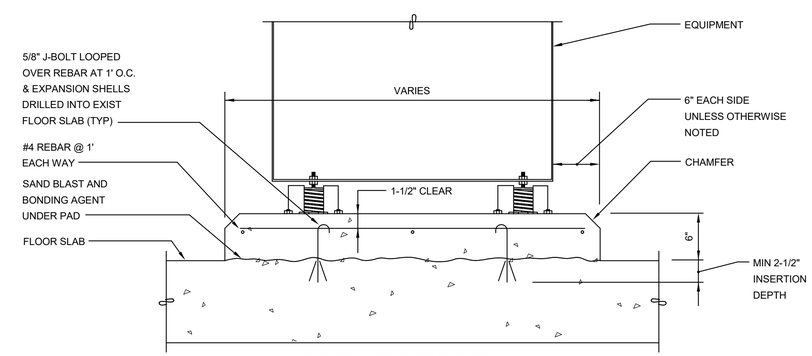

(TYP. FOR ALL EQUIPMENT ON-GRADE)

B13 EQUIPMENT MOUNTING DETAIL
SCALE: NTS

US Army Corps of Engineers ®

MARK	DESCRIPTION	DATE

ISSUE DATE: 15 OCTOBER 2025
SOLICITATION NO.: W912BA22F0002
CONTRACT NO.: W912BA15B0012

DESIGNED BY: C. LI
DRAWN BY: R. BALIGNASAY
CHECKED BY: J. VIVERO
SUBMITTED BY: ISE
SIZE: ANSI D

US ARMY CORPS OF ENGINEERS
HONOLULU DISTRICT
FORT SHAFTER, OAHU, HAWAII

INSYNERGY ENGINEERING
1001 BISHOP STREET SUITE 2500
HONOLULU, HI 96813

JOINT BASE PEARL HARBOR-HICKAM, OAHU, HAWAII
FY22 HAWAII AIR NATIONAL GUARD (HANG) F-22 PLUS-UP
ADD EGRESS SHOP
PROJECT NO.: KMND209087

MECHANICAL DETAILS

SHEET ID
M-502

REVISED FINAL SUBMITTAL

VAV DX SPLIT AIR HANDLING UNIT SCHEDULE

UNIT	AREA SERVED	LOCATION	TYPE	REFRIGERANT	REFRIGERANT BASE CHARGE (LBS)	AIRFLOW			COOLING CAPACITY						ELECTRICAL						FILTER				MAX SOUND (DBA)	WEIGHT (LBS)	REMARKS
									ENT AIR TEMP		LEAV AIR TEMP		CAPACITY								PRE-FILTER		FINAL FILTER				
						SA (CFM)	OA (CFM)	ESP (IN W.G.)	DB (ºF)	WB (ºF)	DB (ºF)	WB (ºF)	SENS (BTUH)	TOTAL (BTUH)	FAN FLA (A)	MOP (A)	V	P	HZ	HP	TYPE	IN.	TYPE	IN.			
AHU-1	ADMIN, IMIS, COMM ROOM, HALLWAY	ADMIN	HORIZONTAL, CEILING SUSPENDED	R-454B	6	810	295	1.70	78.1	66.0	56.7	55.1	19,400	27,700	3	15	208	1	60	1	MERV 8	2	MERV 13	4	70.6	271	PROVIDE WITH INTEGRAL VFD AND FIELD INSTALLED HOT GAS BYPASS.

DX SPLIT FAN COIL UNIT SCHEDULE

UNIT	AREA SERVED	LOCATION	TYPE	REFRIGERANT	AIRFLOW			COOLING CAPACITY									MAX SOUND (DBA)	WEIGHT (LBS)	EER2	SEER2	REMARKS
								ENT AIR TEMP		LEAV AIR TEMP		CAPACITY									
					SA (CFM)	OA (CFM)	ESP (IN W.G.)	DB(ºF)	WB (ºF)	DB (ºF)	WB (ºF)	SENS (BTUH)	TOTAL (BTUH)	V	P	HZ					
FCU-1	COMM ROOM	COMM ROOM	WALL MOUNTED UNIT	R-32	320	-	-	75.4	57.1	55.0	48.5	7,200	7,200	208	1	60	44	20	12.5	21	PROVIDE WITH WALL MOUNTED CONTROLLER AND DDC INTERFACE CONTROLLER. REFER TO MANUFACTUER'S WIRING DIAGRAM FOR POWERING GUIDELINES. PIPING LENTH MODIFICATIONS MADE IN FIELD SHALL BE COORDINATED WITH MANUFACTUER FOR PIPING RECOMMENDATIONS AND REVISED LINE SIZES. PROVIDE WITH DISCONNECT SWITCH.

DX SPLIT AIR COOLED CONDENSING UNIT SCHEDULE

UNIT	UNIT SERVED	LOCATION	REFRIGERANT	REFRIGERANT BASE CHARGE (LBS)	CAPACITY (BTUH)	CONDENSER FAN					COMPRESSOR			ELECTRICAL					SEER	MAX SOUND (DBA)	WEIGHT (LBS)	REMARKS
						AMBIENT AIR TEMP (ºF)	FAN MOTOR NO.	RLA (A)	HP	TYPE	LRA (A)	FAN MOTOR NO.	TYPE	MCA	MOP	V	P	HZ				
ACCU-1	AHU-1	OUTSIDE	R-454B	5	27,700	95	1	2	1/3	ECM	33	1	2- STAGE SCROLL	13.6	20	208	1	60	14	-	150	PROVIDE WITH HOT GAS BYPASS AND MULTIPLE STAGE COMPRESSOR (MINIMUM 2 STEP) OR VARIABLE SPEED COMPRESSOR. PROVIDE CORROSION RESISTANT COATING FOR COIL AND UNIT. PROVIDE BLYGOLD COATING ON COILS, AND PSX 700 COATING FOR CABINET OR COATING ON COILS AND CABINET RATED FOR 10,000 HOUR SALT SPRAY PER ASTM B117.
ACCU-2	FCU-1	OUTSIDE	R-32	1.65	7,200	95	1	-	-	-	-	-	INVERTER	9.1	15	208	1	60	-	46	60	PROVIDE BLYGOLD COATING ON COILS, AND PSX 700 COATING FOR CABINET OR COATING ON COILS AND CABINET RATED FOR 10,000 HOUR SALT SPRAY PER ASTM B117.

EXHAUST FAN SCHEDULE

UNIT	AREA SERVED	LOCATION	FAN DATA		ESP	ELECTRICAL				MAX SOUND (DBA)	WEIGHT (LBS)	REMARKS
			TYPE	AIRFLOW (CFM)	(IN W.G.)	V	PH	HZ	MOTOR SIZE (HP)			
EF-1	101 EXPLOSIVE STORAGE	CEILING	INLINE CENTRIFUGAL	880	0.50	115	1	60	1/2	58	145	PROVIDE SPARK B CONSTRUCTION (SPARK -PROOF AND EXPLOSION-PROOF MOTOR).
EF-2	102 WORK AREA, 103 TOOL STORAGE	CEILING	INLINE CENTRIFUGAL	1850	0.56	115	1	60	3/4	62	105	PROVIDE ECM MOTOR.
EF-3	116 WOMEN, 117 MEN	CEILING	INLINE CENTRIFUGAL	100	0.36	115	1	60	1/15	47	39	PROVIDE ECM MOTOR.
EF-4	106 MECH	CEILING	INLINE CENTRIFUGAL	3600	0.47	208	1	60	2	66	143	PROVIDE ECM MOTOR, 2-SPEED CONTROLLER WITH TERMOSTAT

AIR TERMINAL UNIT SCHEDULE

VAV/CAV NUMBER	ROOM SERVED	BOX CAPACITY MIN	BOX CAPACITY MAX	DESIGN SETPOINT MIN	DESIGN SETPOINT MAX	NOMINAL OUTLET SIZE (IN.)	NOMINAL INLET SIZE DIA. (IN.)	MIN SP REQUIRED IN WG. AT MAX. CFM	ELECTRICAL - BOX			DISCHARGE SOUND POWER LEVELS @ 1.5 INLET S.P. AND MAX BOX CFM OCTAVE BAND & MID FREQUENCY								REMARKS
									VOLTS	P	HZ	1 63	2 125	3 250	4 500	5 1000	6 2000	7 4000	8 8000	
VARIABLE VOLUME TERMINAL UNITS:																				
1	112 ADMIN, 113 IMIS	90	900	200	670	12X10	8	0.03	120	1	60	-	79	74	64	58	56	52	-	SEE NOTE 1
2	111 HALL	30	225	25	90	12X8	4	0.08	120	1	60	-	76	67	60	54	54	49	-	SEE NOTE 1
CONSTANT VOLUME TERMINAL UNITS:																				
1	114 COMM	30	225	50	50	12X8	4	0.08	120	1	60	-	76	67	60	54	54	49	-	SEE NOTE 1

1. PROVIDE WITH DISCONNECT.

PACKAGED DEDICATED OUTDOOR AIR SYSTEM (DOAS) SCHEDULE

UNIT ID	AREA SERVED	SA (CFM)	OA (CFM)	ESP (IN WG)	REFRIGERANT	REFRIGERANT BASE CHARGE (LBS)	COOLING COIL DATA						REHEAT COIL DATA		COMPRESSOR			CONDENSER FAN			ELECTRICAL				OPER. WEIGHT (LBS)	REMARKS
							ENT AIR		LEV AIR		TOTAL (MBH)	SENSIBLE (MBH)	DISCHARGE AIR		QTY	RLA (EA)	TYPE	QTY	FLA (EA)	AMBIENT TEMP (F)	FLA (A)	MCA (A)	MAX FUSE (A)	V/PH/HZ		
							DB (F)	WB (F)	DB (F)	WB (F)			DB (F)	WB (F)												
DOAS-1	101 EXPLOSIVE STORAGE, 102 WORK AREA, & 103 TOOL STORAGE	2,730	2,730	2.00	R-454B	34.00	82.7	74.5	55	54.9	185.6	80.9	75.0	63.0	2	48.1/27.6	SCROLL	2	3.0	95.0	89.10	106.3	150	208/3/60	2,410	1,2,3,4,5,6&7.

NOTES

1. PROVIDE MULTI-STAGE HOT GAS REHEAT.
2 INTERNAL SPRING ISOLATORS FOR FAN AND COMPRESSORS SHALL BE TIED DOWN. COMPLETE SEISMIC RESTRAINED SPRING ISOLATORS, 1.5" DEFLECTION
3. PROVIDE LOW NOISE OPTION FOR ALL PACKAGE UNITS
4. BLYGOLD COATING ON COILS, AND PSX 700 COATING FOR CABINET OR COATING ON COILS AND CABINET RATED FOR 10,000 HOUR SALT SPRAY PER ASTM B117
5. PROVIDE WITH 2" MERV 8 PREFILTER AND 2" MERV 13 FILTER.
6. PROVIDE WITH NON-FUSED DISCONNECT.
7. PROVIDE DUCT SMOKE DETECTOR

US Army Corps of Engineers ®

MARK	DESCRIPTION	DATE

ISSUE DATE: 15 OCTOBER 2025
SOLICITATION NO.: W9128A22F0002
CONTRACT NO.: W9128A19B0012

DESIGNED BY: C. LI
DRAWN BY: R. BALIGNASAY
CHECKED BY: C. VIDEN
SUBMITTED BY: ISE
SIZE: ANSI D

US ARMY CORPS OF ENGINEERS
HONOLULU DISTRICT
FORT SHAFTER, OAHU, HAWAII

INSYNERGY ENGINEERING
1001 BISHOP STREET SUITE 2500
HONOLULU, HI 96813

JOINT BASE PEARL HARBOR-HICKAM, OAHU, HAWAII
FY'22 HAWAII AIR NATIONAL GUARD (HANG) F-22 PLUS-UP
ADD EGRESS SHOP
PROJECT NO.: KMND209087

MECHANICAL EQUIPMENT SCHEDULES

SHEET ID
M-601

REVISED FINAL SUBMITTAL

AHU-1 ROOM AIR BALANCE TABLE

ROOM	NAME	SUPPLY AIR (CFM)	RETURN AIR (CFM)	OUTSIDE AIR (CFM)	EXHAUST AIR (CFM)	TRANSFER AIR IN (CFM)	TRANSFER AIR OUT (CFM)	BALANCE (CFM)
111	HALL	90	60	30	0	0	0	30
112	ADMIN	585	395	190	0	0	0	190
113	IMIS	90	65	25	0	0	0	25
114	COMM	50	0	50	0	0	0	50
115	ELEC	0	0	0	0	0	0	0
116	WOMEN	0	0	0	50	0	0	-50
117	MEN	0	0	0	50	0	0	-50
	SUMMED AIR FLOWS	815	520	295	100	0	0	195
					BUILDING PRESSURIZATION (%)			**18%**

DOAS-1 ROOM AIR BALANCE TABLE

ROOM	NAME	SUPPLY AIR (CFM)	RETURN AIR (CFM)	OUTSIDE AIR (CFM)	EXHAUST AIR (CFM)	TRANSFER AIR IN (CFM)	TRANSFER AIR OUT (CFM)	BALANCE (CFM)
101	EXPLOSIVE STORAGE	780	0	780	880	0	0	-100
102	WORK AREA	1400	0	1400	1350	0	0	50
103	TOOL STORAGE	550	0	550	500	0	0	50
	SUMMED AIR FLOWS	2730	0	2730	2730	0	0	0
					BUILDING PRESSURIZATION (%)			**0%**

US Army Corps of Engineers ®

MARK	DESCRIPTION	DATE

ISSUE DATE: 15 OCTOBER 2025
SOLICITATION NO.: W912BA22F0002
CONTRACT NO.: W912BA19B0072

DESIGNED BY: C. LI
DRAWN BY: R. BALIGNASAY
CHECKED BY: J. VIVERO
SUBMITTED BY: ISE
SIZE: ANSI D

US ARMY CORPS OF ENGINEERS
HONOLULU DISTRICT
FORT SHAFTER, OAHU, HAWAII

INSYNERGY ENGINEERING
1001 BISHOP STREET SUITE 2500
HONOLULU, HI 96813

JOINT BASE PEARL HARBOR-HICKAM, OAHU, HAWAII
FY22 HAWAII AIR NATIONAL GUARD (HANG) F-22 PLUS-UP
ADD EGRESS SHOP
PROJECT NO.: KMND209087

MECHANICAL SCHEDULES

SHEET ID
M-602

REVISED FINAL SUBMITTAL

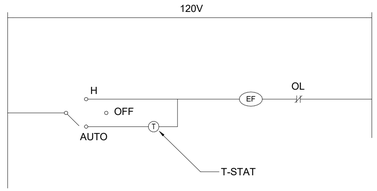

TYPICAL FAN SEQUENCE OF OPERATION

1. THE FAN SHALL BE MANUALLY OPERATED WHEN PLACED IN THE "HAND" MODE.
2. WHEN IN THE "AUTO" MODE, THE FAN SHALL BE CONTROLLED BY ROOM THERMOSTATS. THE LOW SPEED SHALL OPERATE AT 80°F AND THE HIGH SPEED SHALL OPERATE AT 95°F.

L1 EXHAUST FAN CONTROL DIAGRAM (EF-4)

SCALE: NTS

SEQUENCE OF OPERATIONS

1. THE FAN COIL UNIT SHALL BE CONTROLLED VIA A T-STAT MOUNTED ON THE WALL WHERE INDICATED ON THE DRAWINGS.
2. THE T-STAT SHALL MODULATE THE REFRIGERANT FLOW TO THE INDOOR UNIT TO MAINTAIN A SPACE TEMPERATURE OF 75°F.
3. THE FAN COIL UNIT SHALL REMAIN ON 24/7.

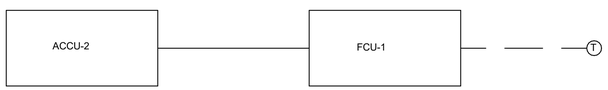

G1 FCU-1 AND ACCU-2 WIRING DIAGRAM

SCALE: NTS

EXHAUST FAN SEQUENCE OF OPERATION:

WC ROOM

1. THE FAN SHALL BE MANUALLY OPERATED WHEN PLACED IN THE "HAND" MODE.
2. WHEN IN "AUTO" MODE, THE FAN SHALL BE CONTROLLED BY THE LIGHT SWITCHES IN THE ROOM(S) THE FAN IS SERVING. THE FAN SHALL REMAIN RUNNING 5 MINUTES AFTER THE LAST SWITCH IS TURNED OFF.
3. ACTIVATION OF THE ATFP EMERGENCY HVAC SHUTDOWN SWITCH SHALL AUTOMATICALLY SHUT DOWN THE EXHAUST FAN AND SHALL AUTOMATICALLY CLOSE THE LOW LEAKAGE DAMPER. THE ATFP BUTTON RESET WILL AUTOMATICALLY TURN THE SYSTEM BACK ON.

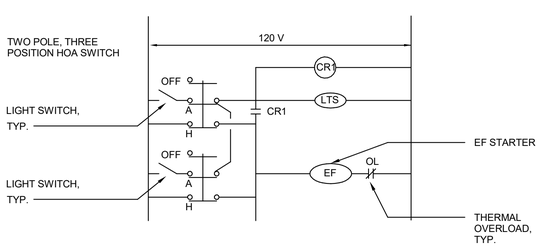

A1 RESTROOM EXHAUST FAN CONTROL DIAGRAM (EF 3)

SCALE: NTS

SEQUENCE OF OPERATIONS

1. THE AHU SHALL BE TURNED ON AND OFF VIA THE DDC SYSTEM WHEN THE H-O-A SWITCH IS PLACED IN THE "AUTO" MODE. THE UNIT SHALL BE OPERATED MANUALLY WHEN THE H-O-A SWITCH IS PLACED IN THE "HAND" MODE.
2. WHEN THE AHU IS TURNED ON AND WHEN THE H-O-A SWITCH IS IN THE "AUTO" MODE, THE AHU AND ITS CORRESPONDING TERMINAL UNITS SHALL OPERATE ON THE TIME SCHEDULE PROGRAMMED INTO THE DDC SYSTEM. THE OA DAMPER WILL OPEN WHEN THE AHU IS TURNED ON AND WILL CLOSE WHEN THE AHU IS TURNED OFF.
3. AT START-UP, THE DDC SYSTEM SHALL OPEN THE LIQUID LINE SOLENOID VALVE TO ALLOW FLOW THROUGH THE COOLING COIL. THE VARIABLE FREQUENCY DRIVE SHALL BE PROGRAMMED TO SOFT START THE MOTOR AT START-UP TO PREVENT OVER-PRESSURIZATION OF THE DUCTWORK.
4. WHEN ALL VAVs ARE AT IT'S MINIMUM POSITION, AND RA TEMPERATURE IS STILL BELOW 70F FOR THE DURATION OF 30 MINUTES, HOT GAS VALVE WILL OPERATE TO MAINTAIN RA TEMP AT 75°F. DURING UNOCCUPIED HOURS, THE HOT GAS VALVE WILL OPERATE TO MAINTAIN RA TEMP AT 78F.
5. OUTSIDE AIR DAMPER SHALL MODULATE TO MAINTAIN BASED ON VFD SPEED TO MAINTAIN OUTSIDE AIR/RETURN AIR RATIO OF 30%.
6. THE PRESSURE IN THE SUPPLY DUCT SHALL BE MEASURED BY THE STATIC PRESSURE SENSOR AT THE END OF THE MAIN DUCT RUN AND THE SIGNAL SHALL BE RELAYED TO THE VARIABLE FREQUENCY DRIVE PANEL. THE PANEL SHALL ADJUST THE FREQUENCY OF THE POWER SUPPLIED TO THE MOTOR TO INCREASE OR DECREASE ITS SPEED TO MAINTAIN THE DUCT STATIC PRESSURE OF 1" WATER. THE REQUIRED SET POINT SHALL BE ADJUST AFTER RECEIVING INPUT FROM THE BALANCING CONTRACTOR.
7. EACH SUPPLY AIR TERMINAL UNIT SHALL BE INDIVIDUALLY CONTROLLED BY IT'S OWN DDC VAV CONTROLLER. THE BOX SHALL BE CONNECTED TO THE DDC SYSTEM. ONE A RISE IN ZONE TEMPERATURE MEASURED BY A ROOM TEMPERATURE SENSOR, THE UNIT WILL MODULATE TO OPEN THE DAMPER TO MAINTAIN THE ROOM TEMPERATURE SET POINT OF 75°F. AS SPACE TEMPERATURE DECREASES, THE DAMPER SHALL MODULATE DOWN TO IT'S MINIMUM POSITION, THE FLOW SENSOR SHALL MODULATE THE DAMPER TO MAINTAIN THE PROPER AIR FLOW TO THE BOX WHICH CORRESPONDS TO THE ROOM TEMPERATURE REQUIREMENT REGARDLESS OF FLUCTUATIONS IN UPSTREAM SUPPLY DUCT PRESSURE. EACH VAV BOX SHALL CLOSE TO ITS MINIMUM POSITION DURING UNOCCUPIED HOURS.
8. ACTIVATION OF THE ATFP EMERGENCY HVAC SHUTDOWN SWITCH SHALL AUTOMATICALLY SHUT DOWN ALL AIR HANDLING UNITS AND DOAS UNITS AND SHALL AUTOMATICALLY CLOSE THE LOW LEAKAGE DAMPERS ON THE MAIN OA DUCTS. THE ATFP BUTTON RESET WILL AUTOMATICALLY TURN THE SYSTEM BACK ON.
9. PROVIDE CAV-1 FOR ROOM 114 COMM TO MAINTAIN CONSTANT POSITIVE PRESSURE AIRFLOW.

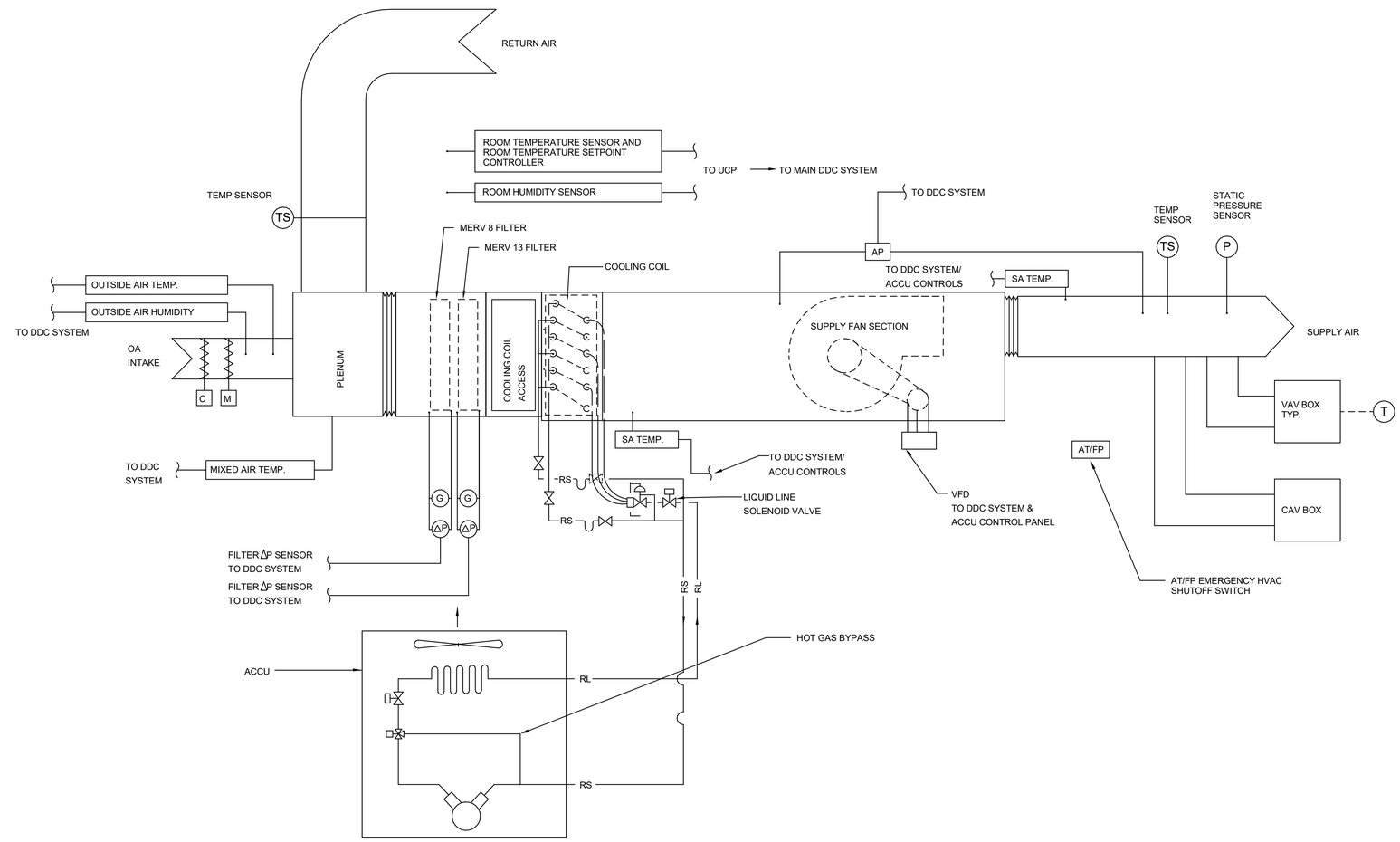

B7 AHU-1 AND ACCU-1 CONTROL SCHEMATIC

SCALE: NTS

US Army Corps of Engineers ®

MARK	DESCRIPTION	DATE

ISSUE DATE: 15 OCTOBER 2025
SOLICITATION NO.: W912A22F0002
CONTRACT NO.: W912BA19B0012

DESIGNED BY: C. LI
DRAWN BY: R. BALIGNASAY
CHECKED BY: C. VIVEIROS
SUBMITTED BY: ISE
SIZE: ANSI D

US ARMY CORPS OF ENGINEERS
HONOLULU DISTRICT
FORT SHAFTER, OAHU, HAWAII

INSYNERGY ENGINEERING
1001 BISHOP STREET SUITE 2500
HONOLULU, HI 96813

JOINT BASE PEARL HARBOR-HICKAM, OAHU, HAWAII
FY22 HAWAII AIR NATIONAL GUARD (HANG) F-22 PLUS-UP
ADD EGRESS SHOP
PROJECT NO.: KMND209087

CONTROL DIAGRAM

SHEET ID
M-701

REVISED FINAL SUBMITTAL

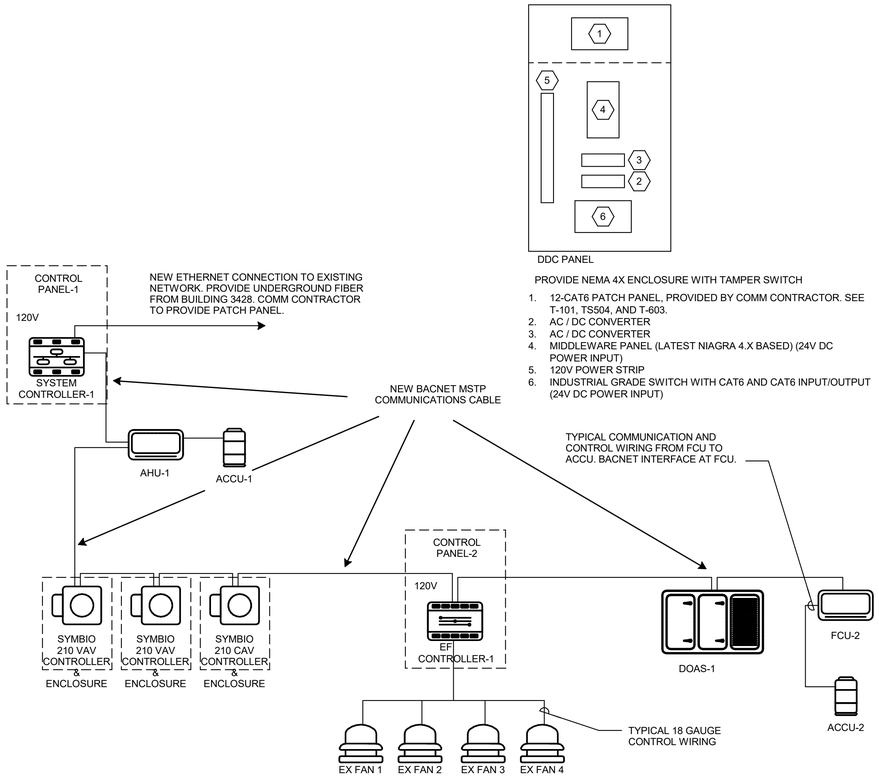

NOTES:

1. NEW DDC SYSTEM SHOULD BE COMPATIBLE WITH TRANE TRACER SC+ BUILDING AUTOMATION SYSTEM (BAS) WITH ENSEMBLE SOFTWARE IN BUILDING 3428.
2. SYSTEM SHALL BE INSTALLED TO MEET CYBER SECURITY REQUIREMENTS PER SPEC SECTION 25 05 11.01 AND 25 05 11.03.
3. CONTRACTOR SHALL PROVIDE ADEQUATE NUMBER OF FIELD PANELS TO PERFORM REQUIRED MONITORING & CONTROL TASK. ADDITIONAL PANELS TO THOSE SHOWN ON THESE DRAWINGS SHALL BE PROVIDED AS REQUIRED. ALL DDC HARDWARE ENCLOSURE WITH AN IP CONNECTION SHALL BE PROVIDED WITH NEMA 4X LOCKABLE ENCLOSURE WITH TAMPER SWITCH WITH AN ALARM TO DDC.
4. PROVIDE POWER TO EACH DDC PANEL WHETHER INDICATED OR NOT. CONTROLS CONTRACTOR SHALL PERFORM LOW VOLTAGE WORK (24-V AND BELOW). ELECTRICAL CONTRACTOR SHALL PERFORM ALL OTHER HIGHER VOLTAGE WORK. CONTROLS CONTRACTOR SHALL BE RESPONSIBLE FOR COORDINATING ALL CONTROLS WORK.
5. ALL CONTROL WIRES SHALL BE IN CONDUIT.

E1 DDC SYSTEM ARCHITECTURE

SCALE: NTS

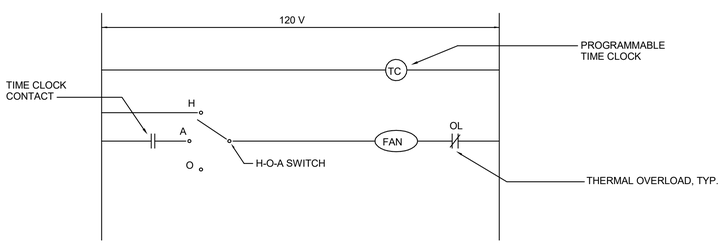

TYPICAL FAN SEQUENCE OF OPERATION

1. THE FAN SHALL BE MANUALLY OPERATED WHEN PLACED IN "HAND" MODE.
2. WHEN IN THE "AUTO" MODE, THE FAN SHALL OPERATE AS SCHEDULED FROM THE TIME CLOCK.
3. ACTIVATION OF THE ATFP EMERGENCY HVAC SHUTDOWN SWITCH SHALL AUTOMATICALLY SHUT DOWN THE EXHAUST FAN AND SHALL AUTOMATICALLY CLOSE THE LOW LEAKAGE DAMPER. THE ATFP BUTTON RESET WILL AUTOMATICALLY TURN THE SYSTEM BACK ON.

A1 EXHAUST FAN CONTROL DIAGRAM (EF 1 AND 2)

SCALE: NTS

SEQUENCE OF OPERATIONS

1. THE DOAS UNIT SHALL BE TURNED ON AND OFF VIA THE DDC SYSTEM WHEN THE H-O-A SWITCH IS PLACED IN THE "AUTO" MODE. THE UNIT SHALL BE OPERATED MANUALLY WHEN THE H-O-A SWITCH IS PLACED IN THE "HAND" MODE.
2. WHEN THE DOAS SHALL BE PROGRAMED TO TURN ON WHEN EF-1 AND EF-2 IS ON AND TURN OFF WHEN EF-1 AND EF-2 IS TURN OFF.
3. UPON ACTIVATION OF THE DUCT SMOKE DETECTOR, A SIGNAL SHALL BE RELAYED TO THE FIRE ALARM SYSTEM AND SHALL SHUTDOWN THE DOAS UNIT.
4. THE DOAS SHALL PROVIDE VENTILATION USING THE 0.4% OUTDOOR PEAK DEW POINT DESIGN VALUE. OUTDOOR AIR SHALL BE ROOM DIRECT. HOT GAS REHEAT VALVE SHALL MODULATE TO MAINTAIN REHEAT COIL SUPPLY AIR TEMPERATURE OF 75°F.
5. ACTIVATION OF THE ATFP EMERGENCY HVAC SHUTDOWN SWITCH SHALL AUTOMATICALLY SHUT DOWN ALL AIR HANDLING UNITS AND DOAS UNITS AND SHALL AUTOMATICALLY CLOSE THE LOW LEAKAGE DAMPERS ON THE MAIN OA DUCTS.

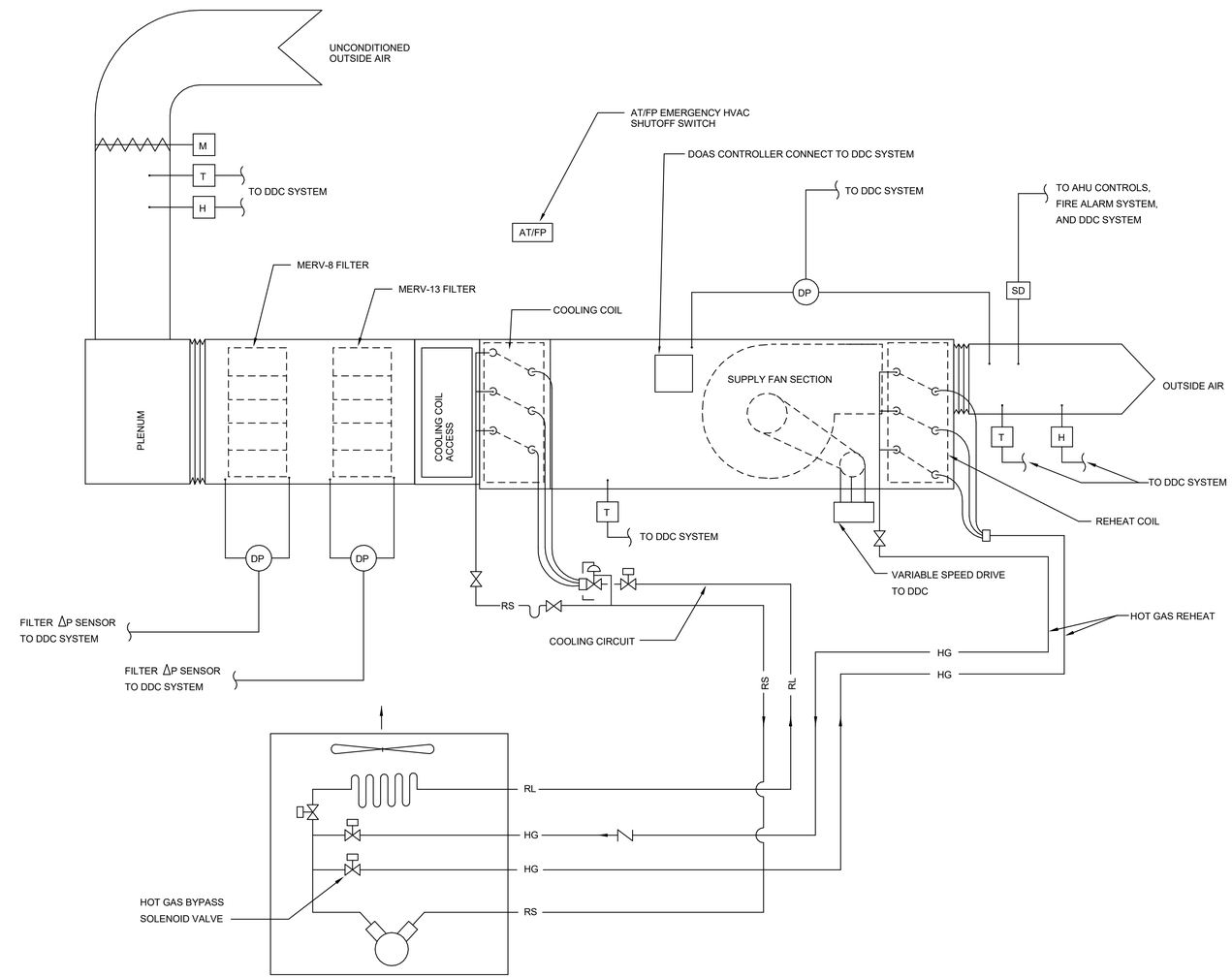

B9 DOAS-1 CONTROL SCHEMATIC

SCALE: NTS

US Army Corps of Engineers ®

MARK	DESCRIPTION	DATE

ISSUE DATE: 15 OCTOBER 2025
SOLICITATION NO.: W912BA22F0002
CONTRACT NO.: W912BA19B0072

DESIGNED BY: C. LI
DRAWN BY: R. BALIGNASAY
CHECKED BY: C. VIDELA
SUBMITTED BY:
ISE
SIZE: ANSI D

US ARMY CORPS OF ENGINEERS
HONOLULU DISTRICT
FORT SHAFTER, OAHU, HAWAII

INSYNERGY ENGINEERING
1001 BISHOP STREET SUITE 2500
HONOLULU, HI 96813

JOINT BASE PEARL HARBOR-HICKAM, OAHU, HAWAII
FY22 HAWAII AIR NATIONAL GUARD (HANG) F-22 PLUS-UP
ADD EGRESS SHOP
PROJECT NO.: KMND209087

CONTROL DIAGRAM

SHEET ID

M-702

REVISED FINAL SUBMITTAL

			ANALOG														BINARY							ALARMS						PROGRAMS							
			INPUT											OUTPUT			INPUT				OUTPUT																
CATEGORY	POINT NO	DDC SYSTEM POINTS DESCRIPTION	TEMPERATURE	PRESSURE	RELATIVE HUMIDITY	RPM	DAMPER POSITION	PERCENT	DIFF PRES (PSI)	CURRENT (AMPS)	WATER FLOW (GPM)	AIR FLOW (CFM)	CONCENTRATION (PPM)	POWER (KWH)	SET POINT ADJUST	OPEN/CLOSE (%)	NOT USED	STATUS (ON/OFF)	FILTER STATUS (ΔP)	POWER (KW)	ALARM CONTACT STATUS	START/STOP, ON/OFF	OPEN/CLOSE	NOT USED	HIGH ANALOG	LOW ANALOG	HIGH BINARY	LOW BINARY	EQUIP/SENSOR FAIL/COMM	DIAGNOSTIC/PANEL ALARM	TIME SCHEDULING	TOTALIZE	RESET	RUN TIME	CALCULATED ENERGY	OPTIMUM START/STOP	AHU STOP/ DAMPER ACT	NOTES
A		VARIABLE VOLUME AIR HANDLING UNIT (AHU-1)										●						●				●																
	1	SUPPLY AIR	●		●																																	
	2	RETURN AIR TEMP	●																																			
	3	MIXED AIR TEMP	●		●																																	
	4	SUPPLY FAN				●												●				●							●		●		●					
	5	COOLING COIL DISCHARGE TEMP																																				
	6	PREFILTER																	●								●											
	7	FILTER																	●								●											
	8	VFD				●		●							●														●	●								
	9	OUTDOOR AIR TEMP	●																																			
	10	OUTSIDE AIR HUMIDITY			●																																	
	11	OA MOTORIZED LOW LEAKAGE DAMPER					●					●						●					●															
	12	DUCT PRESSURE		●																					●													
	13	DIRECT EXPANSION VALVE						●																														
	14	AT/FP EMERGENCY HVAC SHUT DOWN SWITCH																●			●	●															●	
B		DEDICATED OUTDOOR AIR SYSTEMS (DOAS-1)																●				●									●				●			
	1	OUTSIDE AIR	●		●							●																										
	2	OUTSIDE AIR, UNCONDITIONED	●		●							●																										
	3	SUPPLY FAN																●				●									●		●					
	4	DUCT PRESSURE		●																					●													
	5	PREFILTER																	●								●											
	6	FILTER							●										●								●											
	7	SMOKE DETECTOR																			●																	
	8	HOT GAS REHEAT SOLENOID VALVE	●					●																														
	9	OA MOTORIZED LOW LEAKAGE DAMPER					●											●					●															
	10	COOLING COIL DISCHARGE AIR TEMPERATURE SENSOR	●																																			
	11	AT/FP EMERGENCY HVAC SHUT DOWN SWITCH																●			●	●															●	
C		FAN COIL UNIT (FCU-1)													●			●				●																
	1	ROOM TEMP	●																																			
	2	RETURN AIR TEMP																																				
	3	SUPPLY FAN																●				●									●		●					
	4	ECM				●		●							●														●	●								
D		AIR-COOLED CONDENSING UNIT (ACCU-1, -2)																●				●							●		●			●		●		
E		EXHAUST FAN (ALL EXHAUST FANS)										●		●				●				●							●									
	1	ECM						●		●					●			●											●	●								
	2	MOTORIZED LOW LEAKAGE DAMPER (ALL EXCEPT EF-4)					●											●					●															
	3	AT/FP EMERGENCY HVAC SHUT DOWN SWITCH (ALL EXCEPT EF-4)																●			●	●															●	
F		VARIABLE AIR VOLUME BOX (ALL VAV BOXES)	●	●			●	●				●			●	●		●			●	●											●					
	1	ROOM THERMOSTAT	●												●										●				●		●					●		
G		CONSTANT AIR VOLUME BOX	●	●			●	●				●			●	●		●			●	●											●					
H		AT/FP EMERGENCY HAVE SHUT DOWN SWITCH																●			●	●											●					

US Army Corps of Engineers ®

MARK	DESCRIPTION	DATE

DESIGNED BY: C. LI
DRAWN BY: R. BALIGNASAY
CHECKED BY: J. VIDAL
SUBMITTED BY: ISE
SIZE: ANSI D

ISSUE DATE: 15 OCTOBER 2025
SOLICITATION NO.: W9128A22F0002
CONTRACT NO.: W9128A19B0072

US ARMY CORPS OF ENGINEERS
HONOLULU DISTRICT
FORT SHAFTER, OAHU, HAWAII

INSYNERGY ENGINEERING
1001 BISHOP STREET SUITE 2500
HONOLULU, HI 96813

JOINT BASE PEARL HARBOR-HICKAM, OAHU, HAWAII
FY22 HAWAII AIR NATIONAL GUARD (HIANG) F-22 PLUS-UP
ADD EGRESS SHOP
PROJECT NO.: KMND209087

DDC POINTS LIST

SHEET ID

M-703

REVISED FINAL SUBMITTAL

ELECTRICAL GENERAL NOTES

1) ALL WORK SHOWN ON THE ELECTRICAL DRAWINGS IS NEW UNLESS OTHERWISE NOTED. ALL MATERIALS SHALL BE NEW AND "LISTED" OR "LABELED" AS DEFINED BY THE NATIONAL ELECTRICAL CODE (NEC). WORK INCLUDES INSTALLATION OF ALL ELECTRICAL SYSTEMS COMPLETE AND OPERATIONAL AS LIMITED BY THE INTENT OF THE CONTRACT DOCUMENTS.

2) ALL WORK SHALL COMPLY WITH THE NATIONAL ELECTRICAL CODE (NEC), NATIONAL ELECTRICAL SAFETY CODE AND BUILDING ORDINANCES OF THE CITY AND COUNTY OF HONOLULU. CONSTRUCTION PRACTICES SHALL CONFORM TO THE LATEST EDITION OF AMERICAN ELECTRICIANS' HANDBOOK BY CROFT, AND APPLICABLE INSTRUCTIONS OF MANUFACTURERS OF EQUIPMENT AND MATERIAL SUPPLIED FOR THIS PROJECT.

3) SEC. 18-5.2 RETENTION OF PLANS : ONE SET OF APPROVED PLANS AND COMPUTATIONS SHALL BE RETAINED BY THE BUILDING OFFICIAL FOR A PERIOD OF NOT LESS THAN 90 DAYS FROM DATE OF COMPLETION OF THE WORK COVERED THEREIN, AND ONE SET OF APPROVED PLANS SHALL BE RETURNED TO THE APPLICANT, AND SAID SET SHALL BE KEPT ON THE SITE OF THE BUILDING OR WORK AT ALL TIMES DURING WHICH THE WORK AUTHORIZED THEREBY IS IN PROGRESS. (SEC. 18-5.2 R.O. 1978 (1983 ED.); AM. ORD. 93-59).

4) STRUCTURES UNDERGOING CONSTRUCTION, ALTERATION, OR DEMOLITION OPERATIONS, INCLUDING THOSE IN UNDERGROUND LOCATIONS, SHALL COMPLY WITH NFPA 241, STANDARD FOR SAFEGUARDING CONSTRUCTION, ALTERATION, AND DEMOLITION OPERATIONS, AND NFPA 1 2012, AS AMENDED.

5) THE DRAWINGS DO NOT REFLECT ALL THE EXISTING CONDITIONS THAT MAY BE ENCOUNTERED DURING CONSTRUCTION. VISIT THE PROJECT SITE AND BECOME FAMILIAR WITH THE EXISTING CONDITIONS, THE EXTENT OF ANY DEMOLITION, RELOCATION, RECONNECTION, AND THE NEW WORK PRIOR TO THE START OF ON-SITE CONSTRUCTION ACTIVITIES. REPORT ANY DISCREPANCIES AND/OR DIFFERENCES BETWEEN THE EXISTING CONDITIONS AND THE CONSTRUCTION DOCUMENTS TO THE CONTRACTING OFFICER. RESOLVE ALL DISCREPANCIES AND QUESTIONS PRIOR TO THE START OF WORK. BID SUBMISSION SHALL BE CONSIDERED AS EVIDENCE THAT THE CONTRACTOR HAS VISITED THE SITE AND RESOLVED ALL DISCREPANCIES AND QUESTIONS AND NO EXTRA PAYMENT WILL BE AUTHORIZED FOR WORK REQUIRED BY THE CONTRACTOR'S FAILURE TO DO SO.

6) VERIFY AND COORDINATE ALL PENETRATIONS WITH THE STRUCTURAL AND/OR ARCHITECTURAL CONSULTANTS PRIOR TO THE START OF CONSTRUCTION. OBTAIN APPROVAL BEFORE MAKING ANY PENETRATIONS THROUGH STRUCTURAL MEMBERS OR FIRE RATED WALLS AND CEILINGS.

7) COORDINATE AND PROVIDE ACCESS PANELS FOR ALL CONCEALED ELECTRICAL EQUIPMENT, DEVICES, BOXES AND CONDUIT BODIES SO THAT THEY ARE ACCESSIBLE.

8) PATCH, REFINISH, AND PAINT ALL PENETRATIONS THROUGH WALLS AND SLABS TO MATCH FINISH OF ADJACENT SURFACES.

9) RESTORE/REPAIR ANY DAMAGE TO EXISTING SURFACES RESULTING FROM THE INSTALLATION OF NEW ELECTRICAL ITEMS. THE AREAS REPAIRED SHALL MATCH THE ADJACENT SURFACES IN TEXTURE, FINISH AND COLOR.

10) EXISTING DEVICE AND EQUIPMENT LOCATIONS, CIRCUIT ASSIGNMENTS, WIRING CONNECTIONS, AND CONDUIT RUNS INDICATED WERE DERIVED FROM AVAILABLE REFERENCE DOCUMENTS AND LIMITED FIELD INVESTIGATION. FIELD VERIFY ALL EXISTING CONDITIONS AND MAKE ANY NECESSARY ADJUSTMENTS TO SATISFY THE INTENT OF THE DRAWINGS AND SPECIFICATIONS.

11) RE-ROUTE ALL EXISTING CONDUIT, WIRING AND CABLING TO REMAIN WITHIN THE PROJECT AREA AS NECESSARY TO FACILITATE THE REMOVAL OF EXISTING EQUIPMENT AS WELL AS THE INSTALLATION OF ALL NEW EQUIPMENT. REMOVE AND RE-INSTALL ELECTRICAL EQUIPMENT, INCLUDING LIGHTS, TO REMAIN AS REQUIRED.

12) WORK INCIDENTAL TO THE CONTRACT AND NECESSARY TO COMPLETE THE PROJECT, ALTHOUGH NOT SPECIFICALLY REFERRED TO IN THE CONTRACT DOCUMENTS, SHALL BE FURNISHED AND PERFORMED BY THE CONTRACTOR AT NO ADDITIONAL COST TO THE PROJECT. AN EXAMPLE OF SUCH INCIDENTAL WORK ARE JUNCTION BOXES AND PULL BOXES REQUIRED FOR THE INSTALLATION OF ELECTRICAL DEVICES AND EQUIPMENT. ALL INCIDENTAL WORK SHALL BE FURNISHED AND INSTALLED IN ACCORDANCE WITH THE NATIONAL ELECTRICAL CODE.

13) ELECTRICAL CONTRACTOR SHALL BE RESPONSIBLE TO PROVIDE ALL CONDUIT AND WIRING FOR THE POWER CONNECTION TO ALL EQUIPMENT AS INDICATED IN THE DRAWINGS AND SPECIFICATIONS. ALL INCIDENTAL CONDUIT AND WIRING REQUIRED FOR A COMPLETE AND OPERATIONAL SYSTEM MAY NOT BE SHOWN IN THE DRAWINGS OR SPECIFICATIONS. CONTRACTOR SHALL COORDINATE INCIDENTAL CONDUIT AND WIRING REQUIREMENTS BETWEEN ALL TRADES TO ENSURE THE INCIDENTAL CONDUIT AND WIRING IS PROVIDED AND THE AFFECTED SYSTEMS OPERATE AS INTENDED.

14)THE LOCATION OF ALL ELECTRICAL APPARATUS AND DEVICES SHOWN ON THE DRAWINGS ARE APPROXIMATE AND BEFORE INSTALLING, STUDY THE ARCHITECTURAL AND STRUCTURAL DETAILS AND MAKE INSTALLATION IN THE MOST LOGICAL MANNER. CIRCUIT ROUTING IS TYPICAL AND MAY BE VARIED IN ANY MANNER. ANY PIECE OF EQUIPMENT/DEVICE MAY BE RELOCATED WITHIN 10' BEFORE INSTALLATION AT THE DIRECTION OF THE CONTRACTING OFFICER WITHOUT ADDITIONAL CHARGE TO THE PROJECT.

15) SHOULD PROJECT CONDITIONS REQUIRE REARRANGEMENT OF THE PROJECT'S WORK, THE CONTRACTOR SHALL MARK SUCH CHANGES ON THE AS-BUILT DRAWINGS. IF THESE CHANGES REQUIRE AN ALTERNATE METHOD TO THOSE SPECIFIED IN THE CONTRACT DOCUMENTS, THE CONTRACTOR SHALL SUBMIT DRAWINGS TO REFLECT THE PROPOSED ALTERNATE METHODS TO THE CONTRACTING OFFICER FOR REVIEW AND APPROVAL. THE CONTRACTOR SHALL NOT PROCEED UNTIL APPROVAL IS OBTAINED. REARRANGEMENT OF WORK FOR THE PURPOSE OF COORDINATION SHALL NOT BE CONSIDERED AN ITEM FOR EXTRA COST.

16) DISCONNECT AND REMOVE ALL ELECTRICAL APPARATUS, WIRING DEVICES, JUNCTION BOXES, AND ASSOCIATED FEEDER AND BRANCH CIRCUIT WIRING IN THE PROJECT SCOPE OF WORK, UNLESS OTHERWISE NOTED. THE DRAWINGS ARE INTENDED TO SHOW THE GENERAL LIMITS OF THE SCOPE OF WORK AND MAY NOT SHOW ALL THE EXISTING DEVICES, CONDUIT RUNS, ETC. FEEDER AND BRANCH CIRCUIT WIRING TO BE REMOVED SHALL BE DISCONNECTED FROM ITS SOURCE. REMOVE ALL CONDUCTORS AND CONDUIT AND CONDUIT SUPPORT STRUCTURES WHERE ACCESSIBLE. PATCH/REPAIR WALL, FLOOR AND CEILING DAMAGES AS A RESULT OF THE REMOVAL WORK.

17) THE EXISTING ELECTRICAL, TELECOM, AND OTHER ELECTRICALLY-RELATED SYSTEMS IN AREAS ADJACENT TO, OUTSIDE OF, AND/OR OTHERWISE PASSING THROUGH THE PROJECT LIMITS, MUST REMAIN OPERATIONAL DURING THE CONSTRUCTION PERIOD AND POST-CONSTRUCTION. THE CONTRACTOR SHALL EXERCISE DUE CARE AND CAUTION WHEN WORKING NEAR ANY EXISTING EQUIPMENT, DEVICES, OR CABLING/CIRCUITING. PROVIDE NEW JUNCTION BOXES, CONDUITS & WIRING, AND THE LABOR REQUIRED TO FACILITATE THE REQUIRED OPERATIONAL CONTINUITY. BOXES, CONDUITS AND WIRING SHALL BE IN ACCORDANCE WITH THE NEC. ANY DAMAGE TO THE EXISTING EQUIPMENT, DEVICES OR CABLING/CIRCUITING RESULTING FROM THE CONTRACTOR'S OPERATIONS SHALL BE IMMEDIATELY REPAIRED OR OTHERWISE RESTORED TO ITS ORIGINAL WORKING CONDITION AT NO ADDITIONAL COST TO THE PROJECT.

18) THE ELECTRICAL DRAWINGS ARE BASED ON PROPOSED EQUIPMENT. VERIFY ALL SYSTEM REQUIREMENTS (ELECTRICAL, SPECIALTY SYSTEMS, ETC.) WITH THE SELECTED SYSTEM'S MANUFACTURER OR AUTHORIZED REPRESENTATIVE PRIOR TO COMMENCING WITH ANY WORK. COORDINATE RATINGS OF OVERCURRENT PROTECTION DEVICES, DISCONNECT SWITCHES, CONDUIT & WIRING TO MATCH THE ACTUAL EQUIPMENT SUPPLIED FOR THE PROJECT. CORRECT ALL DISCREPANCIES SO AS TO PROVIDE A COMPLETE AND OPERATIONAL SYSTEM. RECORD CHANGES ON THE AS-BUILT DRAWINGS.

19) ALL EQUIPMENT AND APPARATUS SHALL BE CAPABLE OF FITTING IN THE SPACES SHOWN WHILE MEETING THE MANUFACTURER'S RECOMMENDED ACCESS REQUIREMENTS AND APPLICABLE CODE REQUIREMENTS. REVIEW ALL SPACES WHERE EQUIPMENT IS TO BE INSTALLED PRIOR TO ORDERING OF EQUIPMENT AND NOTIFY THE ENGINEER OF ANY INADEQUATE CLEARANCES OR CONDITIONS THAT WILL PREVENT THE PROPER INSTALLATION, MAINTENANCE, AND OPERATION OF THE EQUIPMENT.

20) PROVIDE TYPEWRITTEN CIRCUIT DIRECTORIES FOR ALL PANELS, NEW OR MODIFIED, REFLECTING THE CIRCUIT ARRANGEMENTS AS THEY WERE ACTUALLY INSTALLED.

21) AN ADHESIVE VINYL NAMEPLATE SHALL BE PROVIDED FOR ALL SWITCHES, RECEPTACLES, DISCONNECT SWITCHES AND MISCELLANEOUS DEVICES REQUIRING POWER. THE NAMEPLATE SHALL INDICATE THE PANELBOARD SERVING THE DEVICE AND THE CORRESPONDING CIRCUIT ASSIGNMENT. LETTERING SHALL BE A MINIMUM OF 1/4" HIGH. UTILIZE BROTHER "P-TOUCH" LABEL MAKER OR APPROVED SUBSTITUTE.

22)A GREEN, EQUIPMENT GROUND CONDUCTOR SIZED IN ACCORDANCE WITH THE NEC ARTICLE 250 SHALL BE INSTALLED IN ALL FEEDER AND BRANCH CIRCUITS WHETHER INDICATED ON CONTRACT DRAWINGS OR NOT. INSTALL THIS CONDUCTOR IN ALL RACEWAYS INCLUDING THOSE INSTALLED FOR SWITCH LEGS AND ATTACH TO THE DEVICE, LUMINAIRE, OR EQUIPMENT USING A SUITABLE GROUNDING LUG.

23) DO NOT USE A COMMON NEUTRAL FOR MULTIPLE BRANCH CIRCUITS INSTALLED IN A COMMON CONDUIT. PROVIDE A DEDICATED NEUTRAL FOR EACH INDIVIDUAL CIRCUIT. WHERE MULTIPLE DEDICATED NETURALS ARE INSTALLED IN A COMMON CONDUIT, PROVIDE COLOR CODING OF THE DIFFERENT NEUTRAL CONDUCTORS IN ACCORDANCE WITH NEC 2014 ARTICLE 200.6 (WHITE, GRAY, THREE CONTINUOUS WHITE OR GRAY STRIPES, ETC.).

24) PROVIDE NYLON PULLSTRINGS IN ALL EMPTY CONDUITS UNLESS OTHERWISE INDICATED.

25) ALL SURFACE MOUNTED DEVICES SHALL BE INSTALLED UTILIZING FACTORY PAINTED SURFACE MOUNTING ACCESSORIES AND MATCHING DEVICE BOXES FOR THE MOST AESTHETICALLY PLEASING INSTALLATION.

26) PROVIDE KNOCK-OUT PLUGS FOR ALL UNUSED CONDUIT PENETRATIONS IN BOXES AND ENCLOSURES DUE TO CONDUIT REMOVAL.

27) PAINTING OF ELECTRICAL EQUIPMENT:

a) INTERIOR LOCATIONS - PRIME AND PAINT ALL EXPOSED CONDUITS, BOXES, FITTINGS, SUPPORT CHANNELS, MOUNTING HARDWARE AND ACCESSORIES WITH TWO FINISH COATS TO MATCH THE SURFACE ON WHICH THEY ARE MOUNTED OR TO MATCH THE FINISH OF THE ADJACENT SURFACES. EQUIPMENT SURFACES/COMPONENTS WITH A FACTORY-APPLIED PAINT FINISH NEED NOT BE PAINTED.

OUTAGES

1) IAW NAVFACHIINST 11300.7F, ELECTRICAL OUTAGES SHALL BE REQUESTED IN WRITING A MINIMUM OF 25 WORKING DAYS PRIOR TO THE DESIRED DATE.

2) IAW PWC LTR SER 612/9238 DTD 28 FEB 89, GENERATOR SUPPORT FOR SCHEDULED ELECTRICAL OUTAGES DUE TO CONSTRUCTION CONTRACT WORK SHALL BE PROVIDED BY THE CONTRACTOR.

ELECTRICAL SYMBOL LIST

MOUNTING HEIGHT FROM FLOOR TO		(SPECIAL MOUNTING HEIGHTS INDICATED ON PLAN)		
		SYMBOL		DESCRIPTION
TOP	℄	EXISTING	NEW	
	18"			RECEPTACLE, DUPLEX, GROUNDING TYPE, 125V, NEMA TYPE 5-20R
		J	J/J	JUNCTION BOX, WALL MOUNTED/CEILING MOUNTED
	18"			RECEPTACLE, DUPLEX, GFCI TYPE, 125V, NEMA TYPE 5-20R
				RECEPTACLE, WALL MOUNTED, QUADRUPLEX, GROUNDING TYPE, 125V, NEMA TYPE 5-20R
		E	E	EQUIPMENT CONNECTION
		M	M	MOTOR CONNECTION
				NON-FUSED DISCONNECT SWITCH, 3P30A UNLESS OTHERWISE NOTED, VOLTAGE TO MATCH CIRCUITING
				PANELBOARD
				GROUND
				CIRCUIT BREAKER
				NON-FUSED DISCONNECT SWITCH
			A-1,3	HOMERUN ARROW TO PANELBOARD. LETTER INDICATES PANELBOARD, NUMBERS INDICATES CIRCUITS.
				CONCEALED CONDUIT (HASHMARKS INDICATE 3-WIRES WITHIN, ALL OTHERS SIMILAR).
				EXPOSED RACEWAY, PROVIDE STRAP 8'-0" ON CENTER MAXIMUM
			1	NOTE INDICATOR
			1 / E-2	DETAIL INDICATOR: TOP HALF DENOTES DETAIL NUMBER, BOTTOM HALF DENOTES SHEET NUMBER
			1	DUCT SECTION INDICATOR
				LED LUMINAIRE, CEILING MOUNTED
				LED LUMINAIRE, CEILING MOUNTED WITH EMERGENCY BATTERY PACK
		OS		LUMINAIRE, LINEAR, WALL MOUNTED
				LUMINAIRE, LINEAR, WALL MOUNTED WITH INTEGRAL EMERGENCY BATTERY PACK
				LUMINAIRE, 2'X4' NOMINAL, MOUNTING STYLE AS INDICATED IN LIGHT FIXTURE SCHEDULE
				LUMINAIRE, 2'X4' NOMINAL, MOUNTING STYLE AS INDICATED IN LIGHT FIXTURE SCHEDULE, WITH INTEGRAL EMERGENCY BATTERY PACK
				LED STRIP LIGHT, PENDANT MOUNTED
				ILLUMINATED EXIT SIGN, WALL MOUNTED, DIRECTIONAL ARROWS
	1170mm		$a	LIGHT SWITCH, FLUSH WALL MOUNTED, 1P20A, 120/277V, 1HP MAX. (LETTER INDICATES LUMINAIRES CONTROLLED)
	7'-0"	OS	OS	OCCUPANCY SENSOR, WALL MOUNTED
	1170mm		$OS LV	LOW VOLTAGE SWITCH, OCCUPANCY SENSOR DENOTED
				AIR TERMINAL
				TEST WELL GROUND ROD AND GROUND TEST BOX

US Army Corps of Engineers®

MARK	DESCRIPTION	DATE

ISSUE DATE: 15 OCTOBER 2025
SOLICITATION NO.: W9128A22F0002
CONTRACT NO.: W9128A19D0012

DESIGNED BY: I. KAMA, S. BUCK
DRAWN BY: I. KAMA, S. BUCK
CHECKED BY: S. TOMOKIYO
SUBMITTED BY:
SIZE: ANSI D

U.S. ARMY CORPS OF ENGINEERS
HONOLULU DISTRICT
FORT SHAFTER, OAHU, HAWAII

INSYNERGY ENGINEERING
1001 BISHOP STREET, SUITE 2500
HONOLULU, HI 96813

JOINT BASE PEARL HARBOR-HICKAM, OAHU, HAWAII
FY22 HAWAII AIR NATIONAL GUARD (HIANG) F-22 PLUS-UP
ADD EGRESS SHOP
PROJECT NO.: KWND209087

ELECTRICAL NOTES AND LEGEND

SHEET ID
E-001

REVISED FINAL SUBMITTAL

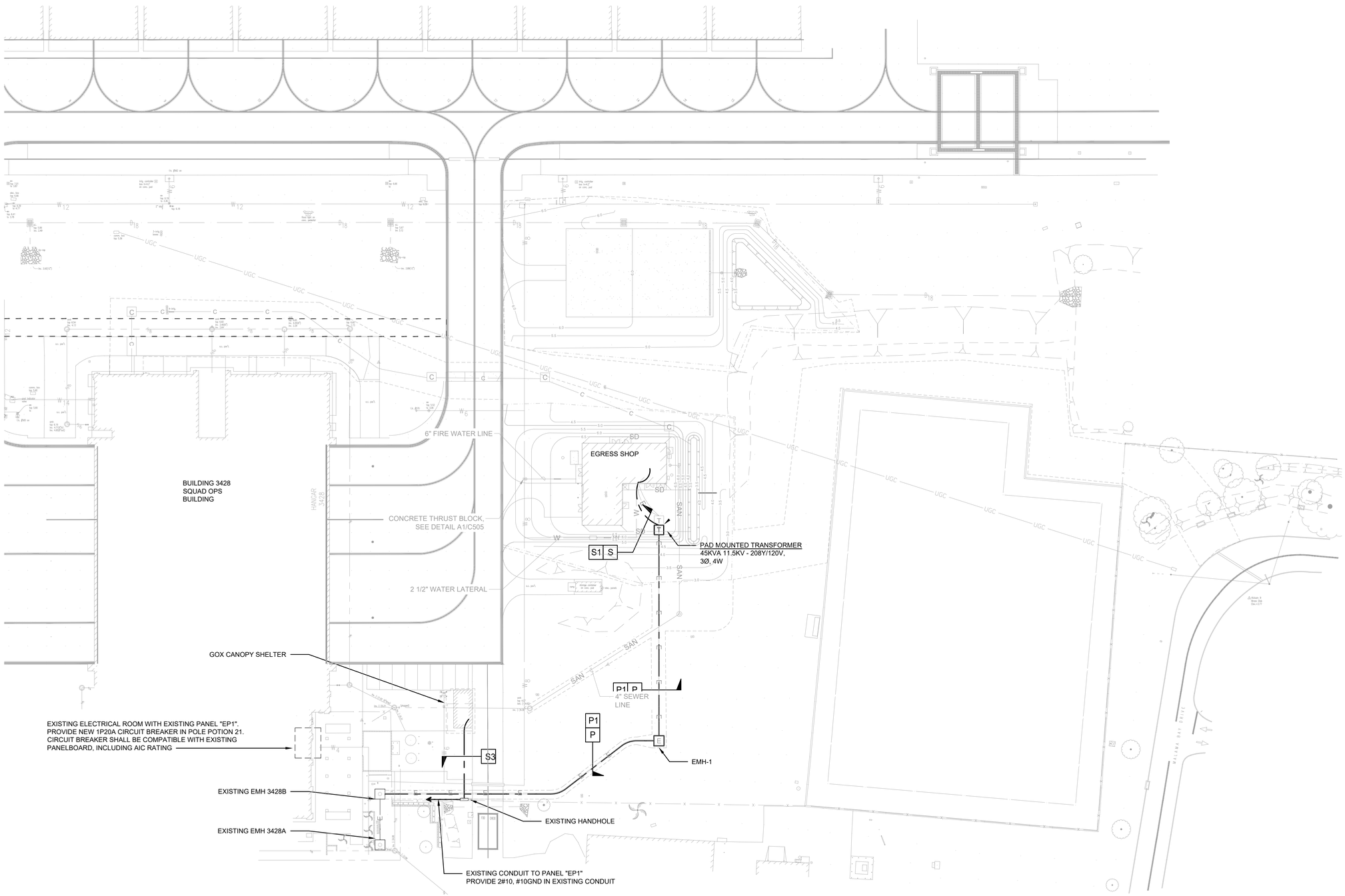

A1 ELECTRICAL SITE PLAN - EGRESS BUILDING

SCALE: 1" = 40'

US Army Corps of Engineers®

MARK	DESCRIPTION	DATE

ISSUE DATE: 15 OCTOBER 2025
SOLICITATION NO.: W9128A22F0002
CONTRACT NO.: W9128A19D0012

DESIGNED BY: I. KAMA, S. BUCK
DRAWN BY: I. KAMA, S. BUCK
CHECKED BY: S. TOMOKIYO
SUBMITTED BY: ISES
SIZE: ANSI D

U.S. ARMY CORPS OF ENGINEERS
HONOLULU DISTRICT
FORT SHAFTER, OAHU, HAWAII

INSYNERGY ENGINEERING
1001 BISHOP STREET, SUITE 2500
HONOLULU, HI 96813

JOINT BASE PEARL HARBOR-HICKAM, OAHU, HAWAII
FY22 HAWAII AIR NATIONAL GUARD (HIANG) F-22 PLUS-UP
ADD EGRESS SHOP
PROJECT NO.: KMND209807

ELECTRICAL SITE PLAN - EGRESS BUILDING

SHEET ID

ES101

REVISED FINAL SUBMITTAL

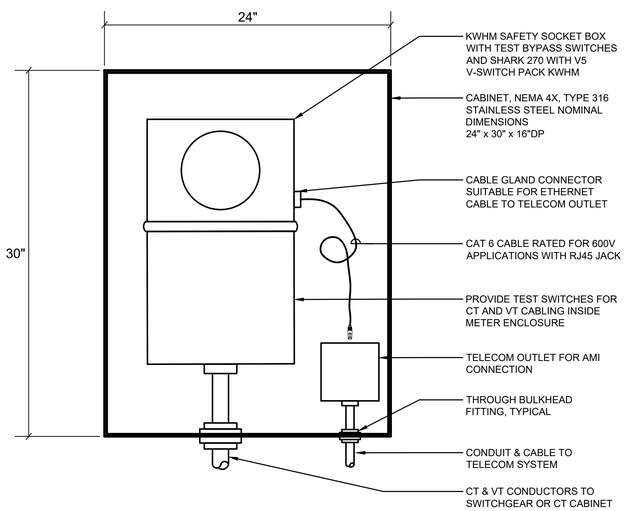

NOTES:

1. CABINET REQUIREMENTS:
   A. CONSTRUCTED OF TYPE 316 STAINLESS STEEL.
   B. CABINET DIMENSIONS ARE NOTATIONAL. COORDINATE ACTUAL DIMENSIONS WITH APPARATUS PROVIDED AND MANUFACTURER REQUIREMENTS. (E.G. WORKING SPACE, ETC.)
   C. PROVIDE IMPACT RESISTANT VIEWING WINDOW FOR METER READING WITHOUT HAVING TO OPEN DOOR.
   D. PROVIDE HINGED SWING OUT DOOR.
   E. COVER MUST BE PAD LOCKABLE, SUITABLE FOR UP TO A 3/8" HASP. PROVIDE MOLYBDENUM ALLOY STAINLESS STEEL PADLOCK, COMMON KEYED TO MATCH NAVFAC HI NES KEYING SYSTEM.
   F. PROVIDE LAMINATED NAMEPLATE ON DOOR OF CABINET IDENTIFYING METERED SUBSTATION AND LOAD SERVED (I.E. - SHORE POWER SUBSTATION X-1A).
2. PROVIDE INLINE GIGABIT DATA SURGE PROTECTOR FOR AMI METER DATA CONNECTION (RJ45).
3. SEAL ALL OPENINGS IN CABINET WATERTIGHT.
4. WALL MOUNT CABINET 5'-6" (FROM TOP OF CABINET) TO FINISHED GRADE.

A1 AMI METER CABINET DETAIL
SCALE: NTS

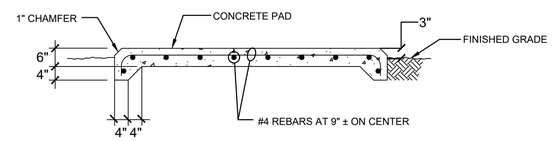

F8 TRANSFORMER CONCRETE PAD DETAIL
SCALE: NTS

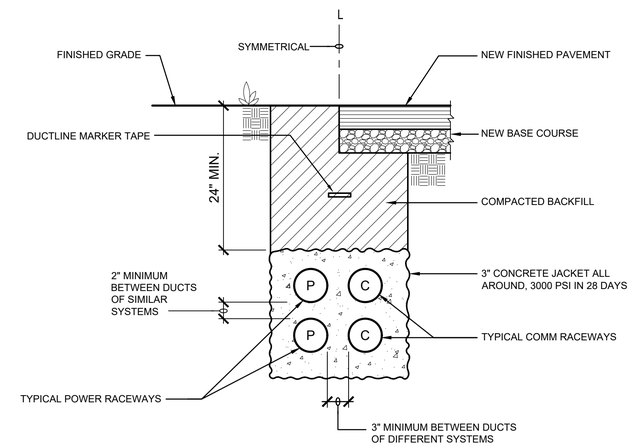

F14 CONCRETE ENCASED DUCT BANK DETAIL
SCALE: NTS

NOTES:

1. DUCT SECTIONS SHALL BE CONCRETE ENCASED UNLESS OTHERWISE NOTED.
2. SEE ONE-LINE DIAGRAMS FOR CONDUCTOR SIZES.

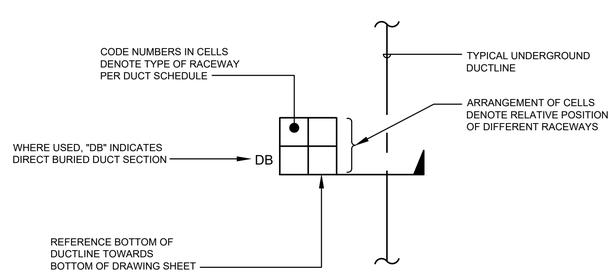

A8 DUCT SECTION FLAG CODE
SCALE: NTS

DUCT SCHEDULE

NO.	DESCRIPTION
P	5"C, SCHEDULE 40 PVC, ELECTRIC PRIMARY SPARE, PROVIDE WITH PULLSTRING
P1	5"C, SCHEDULE 40 PVC, ELECTRIC PRIMARY CIRCUIT
S	4"C SCHEDULE 40 PVC, ELECTRIC SECONDARY SPARE, PROVIDE WITH PULLSTRING
S1	4"C SCHEDULE 40 PVC, ELECTRIC SECONDARY CIRCUIT
S3	1"C SCHEDULE 40 PVC, ELECTRIC SECONDARY CIRCUIT

US Army Corps of Engineers®

MARK	DESCRIPTION	DATE

ISSUE DATE: 15 OCTOBER 2025
SOLICITATION NO.: W9128A22F0002
CONTRACT NO.: W9128A19D0012

DESIGNED BY: I. KAMA, S. BUCK
DRAWN BY: I. KAMA, S. BUCK
CHECKED BY: S. TOMOKIYO
SUBMITTED BY:
USE:
SIZE: ANSI D

U.S. ARMY CORPS OF ENGINEERS
HONOLULU DISTRICT
FORT SHAFTER, OAHU, HAWAII

INSYNERGY ENGINEERING
1001 BISHOP STREET, SUITE 2500
HONOLULU, HI 96813

JOINT BASE PEARL HARBOR-HICKAM, OAHU, HAWAII
FY22 HAWAII AIR NATIONAL GUARD (HIANG) F-22 PLUS-UP
ADD EGRESS SHOP
PROJECT NO.: KMND209087

ELECTRICAL SITE DETAILS

SHEET ID
ES501

REVISED FINAL SUBMITTAL

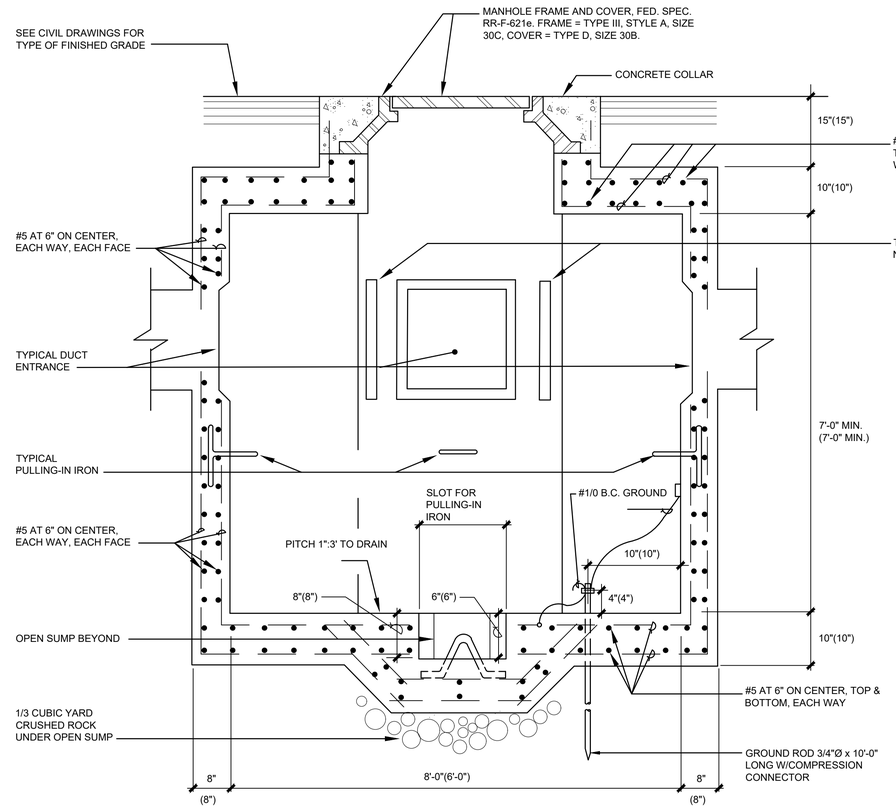

CUT SECTION VIEW

MANHOLE INSTALLATION REQUIREMENTS:

1. PROVIDE AN "E" FOR ELECTRIC IDENTIFICATION STAMP ON THE COVER.
2. PREVENT SURFACE WATER ENTRY BY ELEVATING ENTRY OPENING ABOVE SURROUNDING TERRAIN.
3. COAT EXTERIOR WALLS TO PREVENT INFILTRATION OF LIQUIDS SUCH AS WATER AND OIL.
4. SEAL ALL DUCTS ENTERING MANHOLE.
5. PROVIDE AN IDENTIFICATION NUMBER (EX: K-150) EMBEDDED ON THE MANHOLE RIM ON AT LEAST FOUR DIFFERENT LOCATIONS. PROVIDED BY NAVFAC HAWAII PW 62.

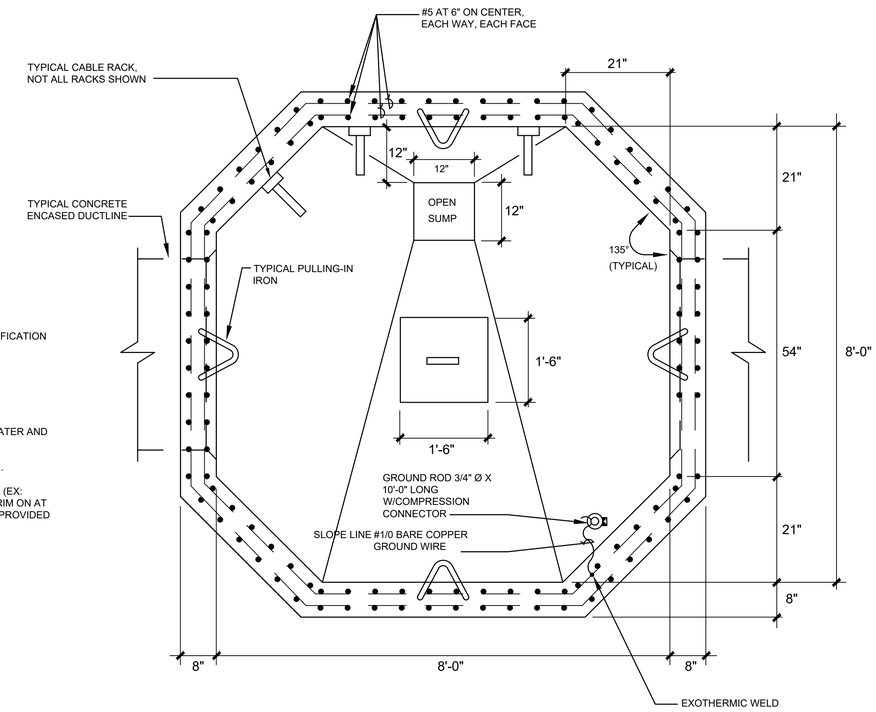

PLAN VIEW

G1 8'X8' MANHOLE DETAIL (TRAFFIC BEARING)

SCALE: NTS

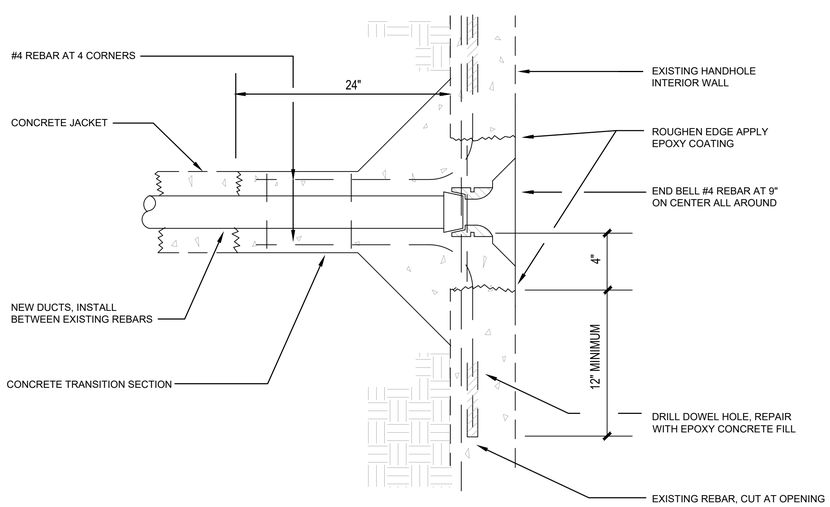

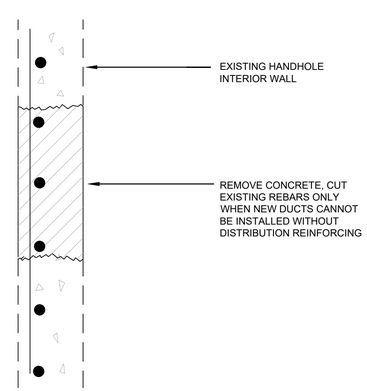

NOTE: WHERE EXISTING KNOCKOUTS ARE NOT AVAILABLE.

A1 TYPICAL MANHOLE DUCT PENETRATION DETAIL

SCALE: NTS

US Army Corps of Engineers®

MARK	DESCRIPTION	DATE

ISSUE DATE: 15 OCTOBER 2025
SOLICITATION NO.: W9128A22F0002
CONTRACT NO.: W9128A19D0012

DESIGNED BY: I. KAMA, S. BUCK
DRAWN BY: I. KAMA, S. BUCK
CHECKED BY: S. TOMOKIYO
SUBMITTED BY:
ISSUE:
SIZE: ANSI D

U.S. ARMY CORPS OF ENGINEERS
HONOLULU DISTRICT
FORT SHAFTER, OAHU, HAWAII

INSYNERGY ENGINEERING
1001 BISHOP STREET, SUITE 2500
HONOLULU, HI 96813

JOINT BASE PEARL HARBOR-HICKAM, OAHU, HAWAII
FY22 HAWAII AIR NATIONAL GUARD (HIANG) F-22 PLUS-UP
ADD EGRESS SHOP
PROJECT NO.: KWND209087

ELECTRICAL SITE DETAILS

SHEET ID
ES502

REVISED FINAL SUBMITTAL

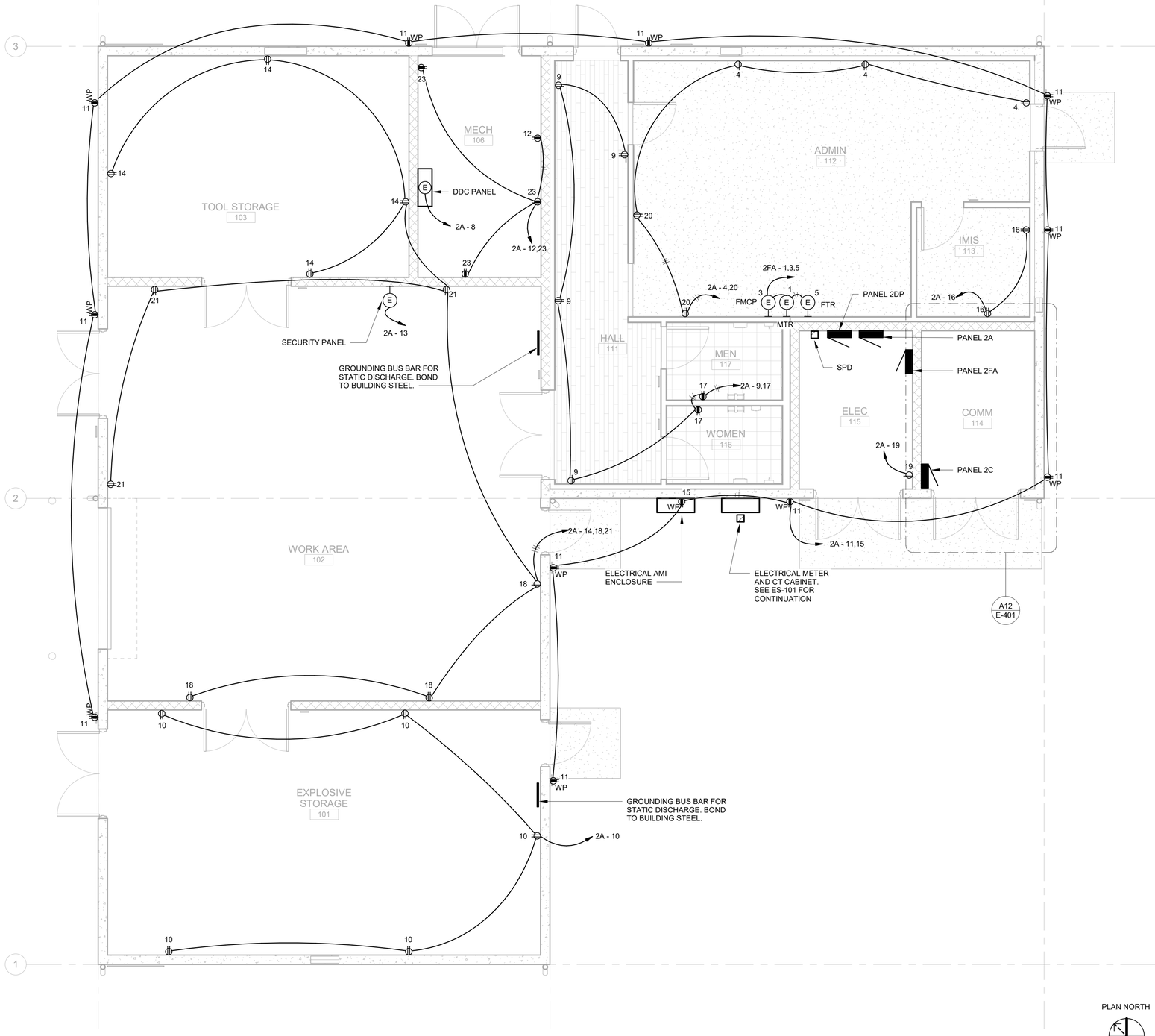

A4 POWER PLAN
SCALE: 1/4" = 1'-0"

GENERAL SHEET NOTES

KEYNOTES

US Army Corps of Engineers ®

MARK	DESCRIPTION	DATE

DESIGNED BY: S. BUCK, I. KAMA
DRAWN BY: S. BUCK, I. KAMA
CHECKED BY: S. TOMCKIV
SUBMITTED BY: ISE
SIZE: ANSI D
ISSUE DATE: 15 OCTOBER 2025
SOLICITATION NO.: W9128A22F0002
CONTRACT NO.: W9128A15D0012

US ARMY CORPS OF ENGINEERS
HONOLULU DISTRICT
FORT SHAFTER, OAHU, HAWAII

INSYNERGY ENGINEERING
1001 BISHOP STREET, SUITE 2500
HONOLULU, HI 96813

JOINT BASE PEARL HARBOR-HICKAM, OAHU, HAWAII
FY22 HAWAII AIR NATIONAL GUARD (HIANG) F-22 PLUS-UP
ADD EGRESS SHOP
PROJECT NO.: KMND209087

POWER PLAN

SHEET ID
E-101

REVISED FINAL SUBMITTAL

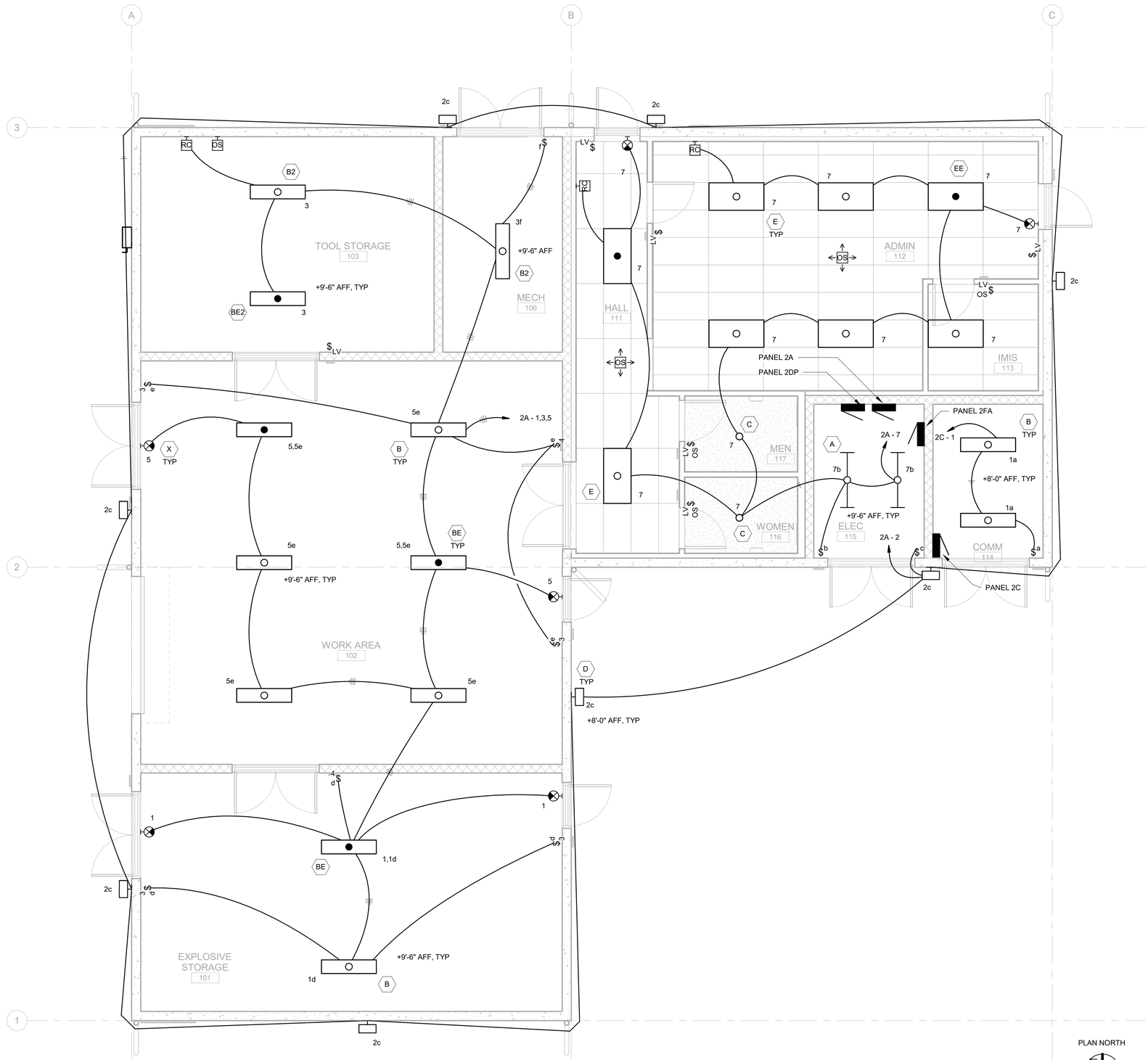

A4 LIGHTING PLAN

SCALE: 1/4" = 1'-0"

GENERAL SHEET NOTES

KEYNOTES

US Army Corps of Engineers ®

MARK	DESCRIPTION	DATE

DESIGNED BY: S. BUCK, I. KAMA
DRAWN BY: S. BUCK, I. KAMA
REVIEWED BY: S. TOMOKIYO
SUBMITTED BY: ISE
SIZE: ANSI D

ISSUE DATE: 15 OCTOBER 2025
SOLICITATION NO.: W9128A22F0002
CONTRACT NO.: W9128A19D0012

US ARMY CORPS OF ENGINEERS
HONOLULU DISTRICT
FORT SHAFTER, OAHU, HAWAII

INSYNERGY ENGINEERING
1001 BISHOP STREET, SUITE 2500
HONOLULU, HI 96813

JOINT BASE PEARL HARBOR-HICKAM, OAHU, HAWAII
FY22 HAWAII AIR NATIONAL GUARD (HANG) F-22 PLUS-UP
ADD EGRESS SHOP
PROJECT NO.: KMND209087

LIGHTING PLAN

SHEET ID

E-102

REVISED FINAL SUBMITTAL

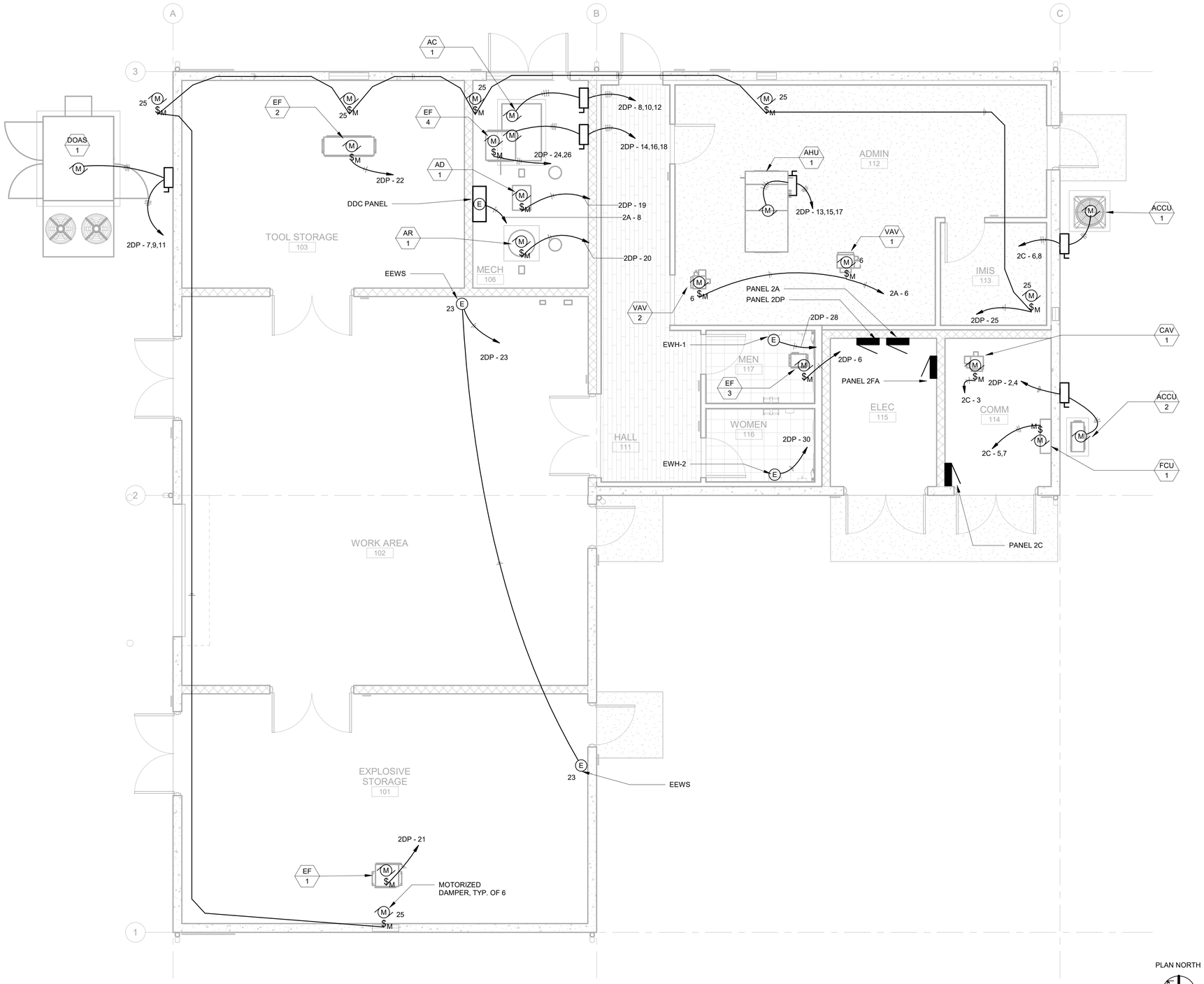

A3 MECHANICAL POWER PLAN
SCALE: 1/4" = 1'-0"

GENERAL SHEET NOTES

KEYNOTES

US Army Corps of Engineers ®

MARK	DESCRIPTION	DATE

DESIGNED BY: S. BUCK, I. KAMA
DRAWN BY: S. BUCK, I. KAMA
CHECKED BY: S. TOMOKIYO
SUBMITTED BY: ISE
SIZE: ANSI D

ISSUE DATE: 15 OCTOBER 2025
SOLICITATION NO.: W9128A22F0002
CONTRACT NO.: W9128A19D0012

US ARMY CORPS OF ENGINEERS
HONOLULU DISTRICT
FORT SHAFTER, OAHU, HAWAII

INSYNERGY ENGINEERING
1001 BISHOP STREET, SUITE 2500
HONOLULU, HI 96813

JOINT BASE PEARL HARBOR-HICKAM, OAHU, HAWAII
FY22 HAWAII AIR NATIONAL GUARD (HANG) F-22 PLUS-UP
ADD EGRESS SHOP
PROJECT NO.: KMND209087

MECHANICAL POWER PLAN

SHEET ID
E-103

REVISED FINAL SUBMITTAL

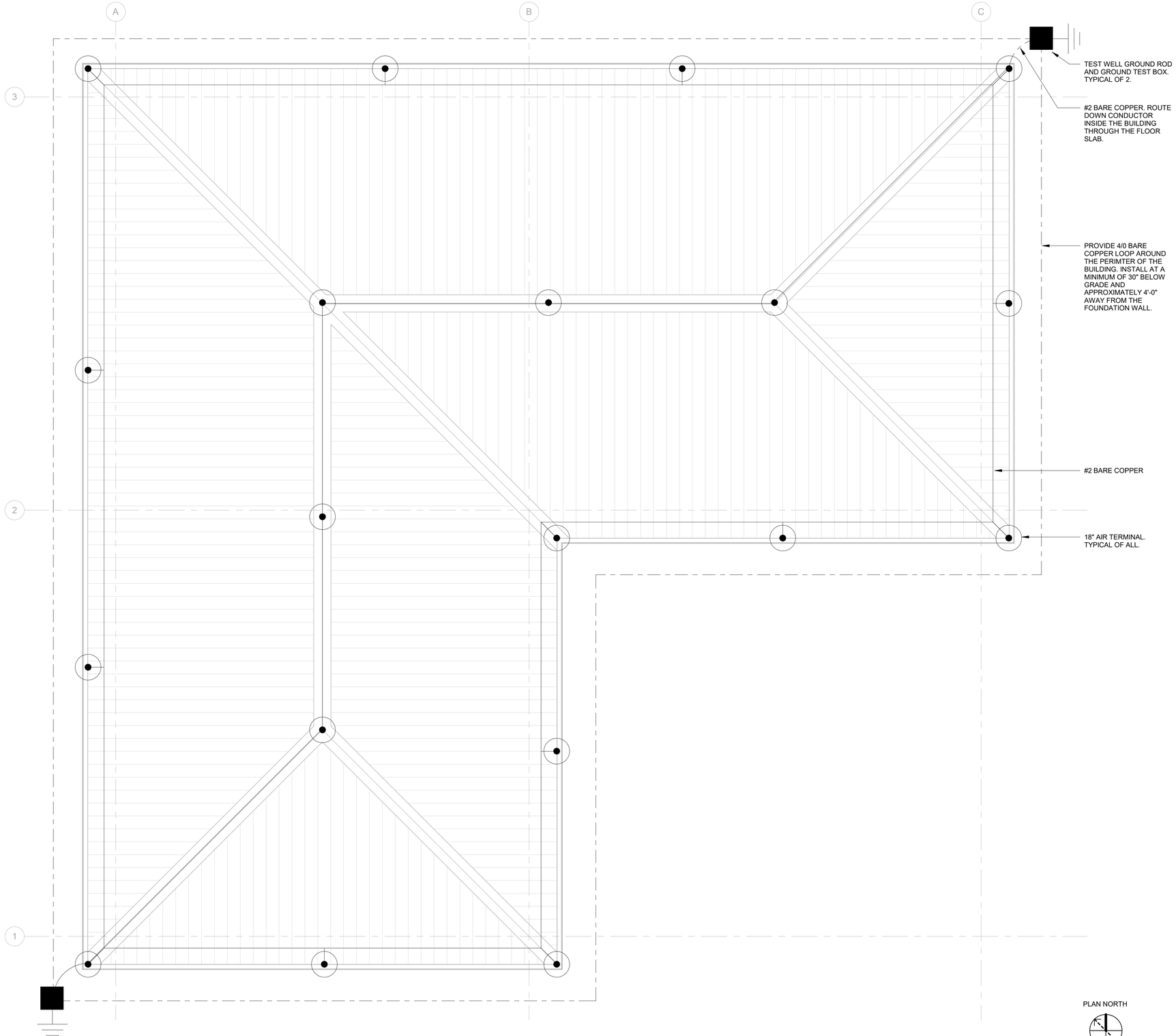

A3 LIGHTNING PROTECTION PLAN
SCALE: 1/4" = 1'-0"

GENERAL SHEET NOTES

1. LIGHTNING PROTECTION CONTRACTOR SHALL PROVIDE A MASTER LABELED, CLASS I LIGHTNING PROTECTION SYSTEM AS REQUIRED.
2. LIGHTNING PROTECTION SYSTEM SHALL PROVIDE 25 OHMS MAXIMUNM RESISTANCE TO GROUND. PROVIDE ADDITIONAL GROUND AS REQUIRED.
3. ALL CONNECTIONS OF GROUNDING COMPONENTS BELOW GRADE OR IN CONCRETE SHALL BE EXOTHERMICALLY WELDED. MAXIMUM MEASURE RESISTANCE ACROSS ANY CONNECTION SHALL NOT EXCEED MILLIOHM.
4. ALL BURIED CONNECTION SHALL BE COATED WITH A CORROSION PREVENTIVE COMPOUND SIMILAR TO NO-OX-ID.
5. METAL BODIES OF INDUCTANCE ABOVE THE ROOF SUCH AS METAL FLASHING, GRAVEL STOPS, ROOF DRAINSM SOIL PIPE VENTS, INSULATION VENTS, LOUVERS AND DOOR FRAMES SITUATED WITHIN 6 FEET OF A LIGHTNING CONDUCTOR OR BONDED EMTAL BODY SHALL BE INTERCONNECTED TO THE LIGHTNING CONDUCTOR SYSTEM.
6. NO BEND OF A CONDUCTOR SHALL FORM A FINAL INCLUDED ANGLE OF LESS THAN 90 DEGREES NOR SHALL HAVE A RADIUS OF BEND LESS THAN 8".
7. CONDUCTOR SHALL INTERCONNECT ALL AIR TERMINALS AND SHALL FORM A TWO-WAY PATH FROM EACH AIR TERMINALS HORIZONTALLY OF DOWNWARD TO CONNECTIONS WITH THE GROUND TERMINALS.
8. ALL LIGHTNING PROTECTION CONDUCTORS SHALL BE FASTENED NOT MORE THAN 3 FEER SPACING.
9. CONNECTIONS TO GROUND ROD OR GROUND LOOP CONDUCTORS SHALL BE MADE AT A POINT NOT LESS THAN 2 FEET BELOW GRADE AND 3 FEET AWAY FROM FOUNDATION WALL.
10. AIR TERMINALS SHALL BE PLACED AT RIDGE AND WITHIN 2 FEET OF OUTSIDE EDGE.
11. AIR TERMINAL SPACING SHALL CONFORM WITH NFPA 780.
12. BOND ALL METALLIC PIPES INCLUDING WATER, FIRE, GAS, SEWER, STORM, ETC. WHICH ENTER THE STRUCTURE TO THE NEAREST DOWNLOEAD, GROUND ROD OR GROUND LOOP.
13. THE LIGHTNING PROTECTION SYSTEM SHALL BE INSTALLED IN A NEAT AND INCONSPICUOUS MANNER SO THAT ALL COMPONENTS WILL BEND IN WITH THE APPEARANCE OF THE BUIILDING.
14. SEAL ENDS OF CONDUIT MOISTURE TIGHT WITH DUCT SEAL OR LEAD WEDGE.
15. INSTALL LPS AND GROUNDING PER NFPA 780, AFI 32-1065, AFMAN 91-201, DOD 6055.9 STD, DDESB DEFINITIVE PLAN 421-80-06 AND OTHER UFC STANDARD.

US Army Corps of Engineers ®

MARK	DESCRIPTION	DATE

DESIGNED BY: S. BUCK, I. KAMA
DRAWN BY: S. BUCK, I. KAMA
CHECKED BY: S. TOMCHICKO
SUBMITTED BY: ISE
SIZE: ANSI D
ISSUE DATE: 15 OCTOBER 2025
SOLICITATION NO.: W9128A22F0002
CONTRACT NO.: W9128A15D0172

US ARMY CORPS OF ENGINEERS
HONOLULU DISTRICT
FORT SHAFTER, OAHU, HAWAII

INSYNERGY ENGINEERING
1001 BISHOP STREET, SUITE 2500
HONOLULU, HI 96813

JOINT BASE PEARL HARBOR-HICKAM, OAHU, HAWAII
FY22 HAWAII AIR NATIONAL GUARD (HIANG) F-22 PLUS-UP
ADD EGRESS SHOP
PROJECT NO.: KMND209087

LIGHTNING PROTECTION PLAN

SHEET ID
E-104

REVISED FINAL SUBMITTAL

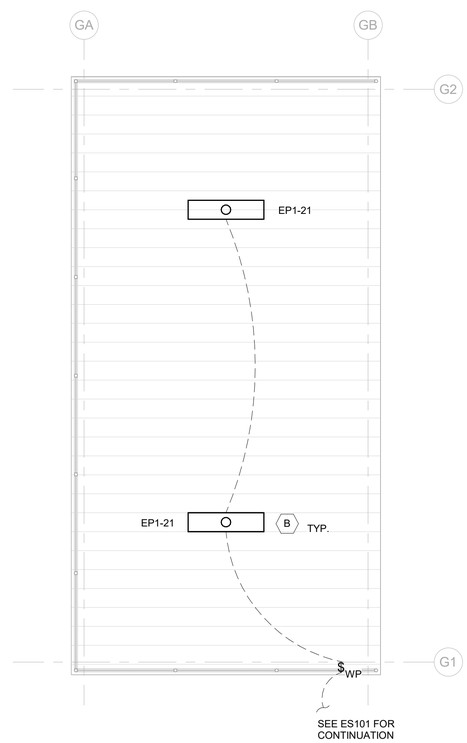

A6 GOX CONOPY SHELTER LIGHTING PLAN
SCALE: 1/4" = 1'-0"
0 2' 4' 8'

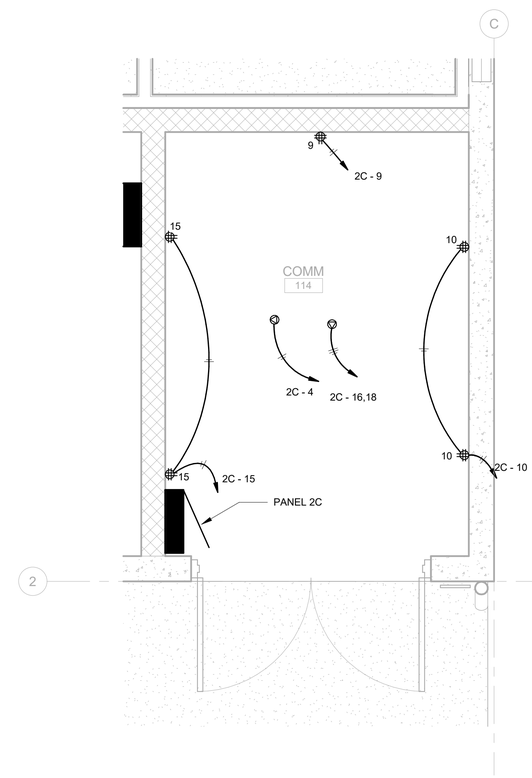

A12 ENLARGED COMM ROOM - POWER PLAN
SCALE: 1/2" = 1'-0"
0 1' 2' 4'

GENERAL SHEET NOTES

PROVIDE 1 EACH NEMA L5-20R AND 1 EACH NEMA L14-30R SPECIAL RECEPTACLES MOUNTED ON THE BOTTOM OF THE CABLE TRAY/LADDER DIRECTLY ABOVE EACH COMM EQUIPMENT CABINET. SEE TELECOMMUNICATIONS DRAWINGS FOR CABINET LOCATIONS.

US Army Corps of Engineers ®

MARK	DESCRIPTION	DATE

ISSUE DATE: 15 OCTOBER 2025
SOLICITATION NO.: W912BA22F0002
CONTRACT NO.: W912BA15B0012

DESIGNED BY: S. BUCK, I. KAMA
DRAWN BY: S. BUCK, I. KAMA
CHECKED BY: S. TOMCKIV D.
SUBMITTED BY: ISE
SIZE: ANSI D

US ARMY CORPS OF ENGINEERS
HONOLULU DISTRICT
FORT SHAFTER, OAHU, HAWAII

INSYNERGY ENGINEERING
1001 BISHOP STREET, SUITE 2500
HONOLULU, HI 96813

JOINT BASE PEARL HARBOR-HICKAM, OAHU, HAWAII
FY22 HAWAII AIR NATIONAL GUARD (HIANG) F-22 PLUS-UP
ADD EGRESS SHOP
PROJECT NO.: KMND209087

ENLARGED COMM ROOM - POWER PLAN

SHEET ID
E-401

REVISED FINAL SUBMITTAL

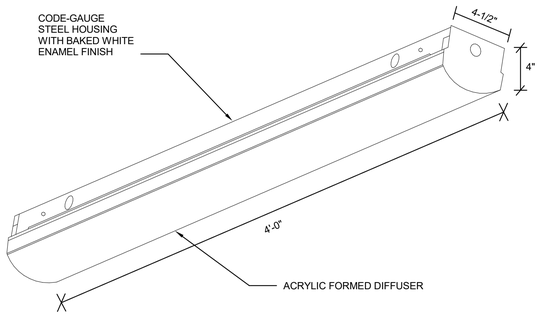

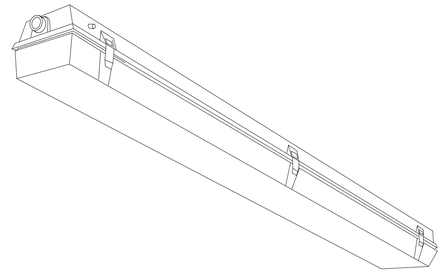

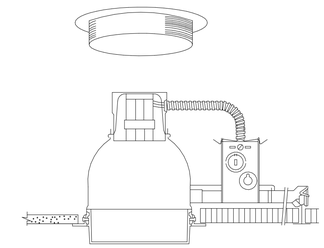

TYPE	VOLTS	DESCRIPTION	MOUNTING AND OPTION
A	120V, 1PH, 60HZ, 24W, 3500K, 80 CRI MIN., 2849 LUMENS	LED LENSED STRIPLIGHT	CEILING SUSPENDED
BE/BE2	120/277V, 1PH, 60HZ, 18W, 3500K, 80 CRI MIN, 6200/8100 LM	SIMILAR TO TYPE B/BE EXCEPT INTEGRAL 90 MINUTE EMERGENCY BATTERY PACK PER NFPA 101.	CEILING SUSPENDED
B2	120/277V, 1PH, 60HZ, 18W, 3500K, 80 CRI MIN., 8100 LUMEN	SIMILAR TO TYPE B EXCEPT 8100 LUMEN LAMP OUTPUT.	CEILING SUSPENDED
B	120/277V, 1PH, 60HZ, 18W, 3500K, 80 CRI MIN., 6200 LUMENS	12"W X 24"L X 5"H ENCLOSED AND GASKETED LED, DIE FORMED CODE GAUGE COLD ROLLED STEEL UL LISTED FOR WET LOCATIONS	CEILING SUSPENDED
C	120V, 1PH, 60HZ, 20W, 3500K, 90 CRI MIN., 3500 LUMEN	4" DIAMETER LED DOWNLIGHT, 18 GAUGE GALVANIZED STEEL FRAME, ALUMINUM SPUN REFLECTORS, WIDE FLOOD DISTRIBUTION, WET LISTED	RECESSED

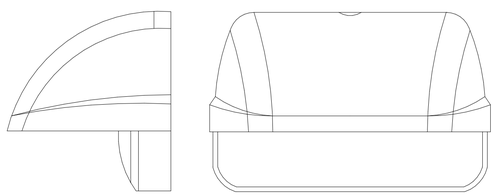

NOTES:

1. INTEGRAL PHOTOCELL AND MOTION SENSOR. AUTOMATIC ON TO FULL BRIGHTNESS WHEN ACTIVITY IS SENSED. DIM TO 70 PERCENT OF FULL LIGHT OUTPUT WHEN NO ACTIVITY IS SENSED. AUTOMATICALLY TURN OFF WHEN SUFFICIENT DAYLIGHT IS AVAILABLE.

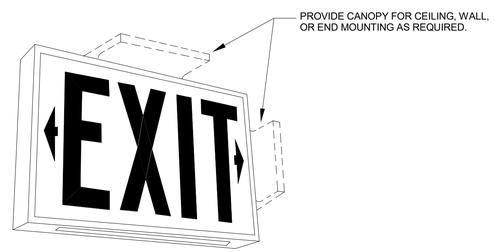

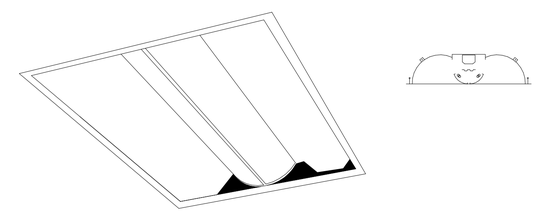

TYPE	VOLTS	DESCRIPTION	MOUNTING AND OPTION
D	120V, 1PH, 60HZ, 17W, 3000K, 80 CRI MIN., 1400 LUMEN	LED WALL PACK, DECORATIVE DIE-CAST ALUMINUM HOUSING, BRONZE FINISH, FULL CUT-OFF DISTRIBUTION LENSES, TYPE III DISTRIBUTION. WET LISTED	WALL MOUNTED
X	120V,1PH, 60HZ, 3.8W	LED EXIT SIGN, WHITE FINISH WITH GREEN LETTERING, DIE-CAST ALUMINUM HOUSING, EMERGENCY INTEGRAL BATTERY PACK	WALL MOUNTED
EE	120V, 1PH, 60HZ, 36W, 3500K, 80 CRI MIN. 2770 LUMEN	SIMILAR TO TYPE E EXCEPT INTEGRAL 90 MINUTE EMERGENCY BATTERY PACK PER NFPA 101.	RECESSED
E	120V, 1PH, 60HZ, 36W, 3500K, 80 CRI MIN., 2770 LUMEN	24"W X 48"L X 5"H ENCLOSED LED, DIE FORMED CODE GAUGE COLD ROLLED STEEL CONSTRUCTION, MATTE WHITE FINISH, REMOVABLE LENS	RECESSED

US Army Corps of Engineers ®

MARK	DESCRIPTION	DATE

DESIGNED BY: S. BUCK, I. KAMA
DRAWN BY: S. BUCK, I. KAMA
CHECKED BY: S. TOMOKIYO
SUBMITTED BY:
SIZE: ISE
ANSI D

ISSUE DATE: 15 OCTOBER 2025
SOLICITATION NO.: W9128A22F0002
CONTRACT NO.: W912BA15B0072

US ARMY CORPS OF ENGINEERS
HONOLULU DISTRICT
FORT SHAFTER, OAHU, HAWAII

INSYNERGY ENGINEERING
1001 BISHOP STREET, SUITE 2500
HONOLULU, HI 96813

JOINT BASE PEARL HARBOR-HICKAM, OAHU, HAWAII
FY22 HAWAII AIR NATIONAL GUARD (HANG) F-22 PLUS-UP
ADD EGRESS SHOP
PROJECT NO.: KMND209087

LUMINAIRE SCHEDULE

SHEET ID

E-501

REVISED FINAL SUBMITTAL

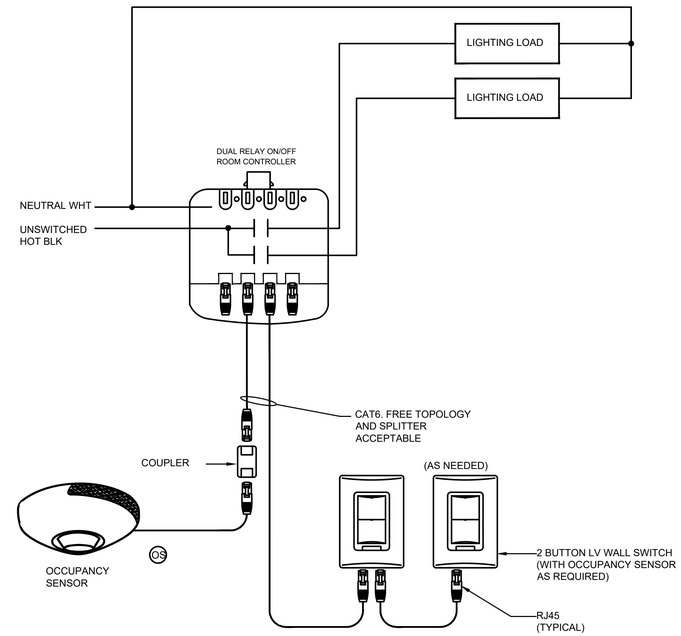

G13 TYPICAL OCCUPANCY SENSOR LIGHTING DIAGRAM
SCALE: NTS

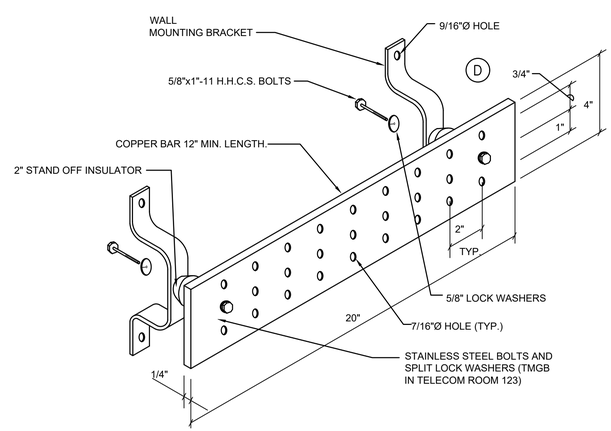

A6 GROUNDING BUS DETAIL
SCALE: NTS

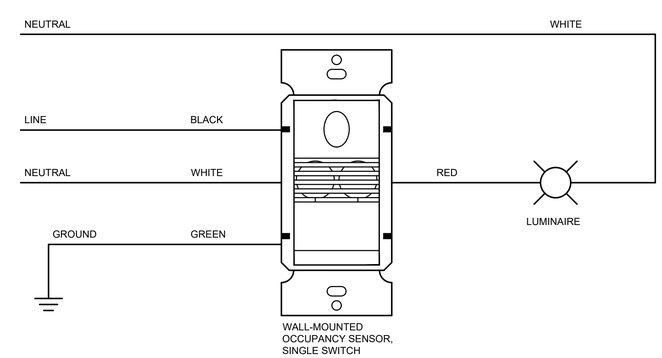

A13 TYPICAL COMBINATION OCCUPANCY SENSOR & LIGHT SWITCH DIAGRAM
SCALE: NTS

US Army Corps of Engineers®

MARK	DESCRIPTION	DATE

ISSUE DATE: 15 OCTOBER 2025
SOLICITATION NO.: W9128A22F0002
CONTRACT NO.: W9128A19D0012

DESIGNED BY: I. KAMA, S. BUCK
DRAWN BY: I. KAMA, S. BUCK
CHECKED BY: S. TOMOKIYO
SUBMITTED BY:
ISSUE:
SIZE: ANSI D

U.S. ARMY CORPS OF ENGINEERS
HONOLULU DISTRICT
FORT SHAFTER, OAHU, HAWAII

INSYNERGY ENGINEERING
1001 BISHOP STREET, SUITE 2500
HONOLULU, HI 96813

JOINT BASE PEARL HARBOR-HICKAM, OAHU, HAWAII
FY22 HAWAII AIR NATIONAL GUARD (HIANG) F-22 PLUS-UP
ADD EGRESS SHOP
PROJECT NO.: KWND209087

MISCELLANEOUS DETAILS

SHEET ID
E-502

REVISED FINAL SUBMITTAL

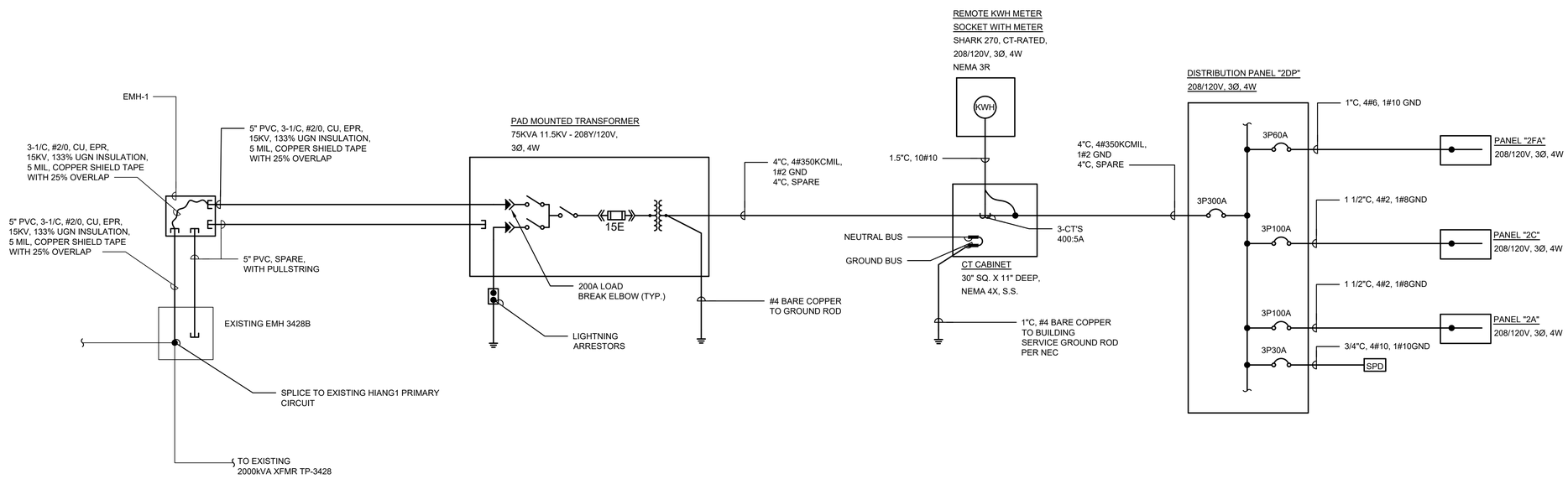

A1 ONE LINE DIAGRAM - EGRESS SHOP
SCALE: NTS

US Army Corps of Engineers®

MARK	DESCRIPTION	DATE

ISSUE DATE: 15 OCTOBER 2025
SOLICITATION NO.: W9128A22F0002
CONTRACT NO.: W9128A19D0012

DESIGNED BY: I. KAMA, S. BUCK
DRAWN BY: I. KAMA, S. BUCK
CHECKED BY: S. TOMOKIYO
SUBMITTED BY:
ISSUE:
SIZE: ANSI D

U.S. ARMY CORPS OF ENGINEERS
HONOLULU DISTRICT
FORT SHAFTER, OAHU, HAWAII

INSYNERGY ENGINEERING
1001 BISHOP STREET, SUITE 2500
HONOLULU, HI 96813

JOINT BASE PEARL HARBOR-HICKAM, OAHU, HAWAII
FY22 HAWAII AIR NATIONAL GUARD (HIANG) F-22 PLUS-UP
ADD EGRESS SHOP
PROJECT NO.: KWND209087

ONE - LINE DIAGRAM

SHEET ID
E-601

REVISED FINAL SUBMITTAL

BRANCH PANEL: 2A

LOCATION: ELEC 115
SUPPLY FROM: 2DP
MOUNTING: SURFACE
ENCLOSURE: NEMA 1

VOLTS: 120/208 Wye
PHASES: 3
WIRES: 4
CABINET WIDTH: 20"

A.I.C. RATING: 10,000
MAINS TYPE: MCB
BUS RATING: 100 A
MCB RATING: 100 A

GND	WIRE	CKT	CIRCUIT DESCRIPTION	ID	TRIP	POLES	A		B		C		POLES	TRIP	ID	CIRCUIT DESCRIPTION	CKT	WIRE	GND
12	12	1	L - EXPLOSIVE STORAGE		20 A	1	36	136					1	20 A		L - Exterior	2	12	12
12	12	3	L - TOOL STORAGE, MECH		20 A	1			54	540			1	20 A		R - ADMIN	4	12	12
12	12	5	L - WORK AREA		20 A	1					108	175	1	15 A		VAV-1, 3	6	12	12
12	12	7	L - ADMIN,HALL,RESTRMS,ELEC		20 A	1	376	500					1	20 A		DDC PANEL	8	12	12
12	12	9	R - WOMEN		20 A	1			720	900			1	20 A		R - WORK AREA	10	12	12
12	12	11	R-EXTERIOR		20 A	1					1980	180	1	20 A		R-AMI WATER METER	12	12	12
12	12	13	SECURITY PANEL		20 A	1	500	720					1	20 A		R - TOOL STORAGE	14	12	12
12	12	15	R-AMI ELEC METER		20 A	1			180	360			1	20 A		R - IMIS	16	12	12
12	12	17	R - MEN		20 A	1					360	540	1	20 A		R - WORK AREA	18	12	12
12	12	19	R - ELEC RM		20 A	1	180	360					1	20 A		R - ADMIN	20	12	12
12	12	21	R - WORK AREA		20 A	1			540	0			1	20 A	--	Spare	22	--	--
12	12	23	R - MECH		20 A	1					540	0	1	20 A	--	Spare	24	--	--
--	--	25	Spare	--	20 A	1	0	0					1	20 A	--	Spare	26	--	--
--	--	27	Spare	--	20 A	1			0	0			1	20 A	--	Spare	28	--	--
--	--	29	PFB	--	--	1					--	--	1	--	--	PFB	30	--	--
--	--	31	PFB	--	--	1	--	--					1	--	--	PFB	32	--	--
--	--	33	PFB	--	--	1			--	--			1	--	--	PFB	34	--	--
--	--	35	PFB	--	--	1					--	--	1	--	--	PFB	36	--	--
--	--	37	PFB	--	--	1	--	--					1	--	--	PFB	38	--	--
--	--	39	PFB	--	--	1			--	--			1	--	--	PFB	40	--	--
--	--	41	PFB	--	--	1					--	--	1	--	--	PFB	42	--	--
						TOTAL LOAD:	2746 VA		3291 VA		3861 VA								
						TOTAL AMPS:	23 A		28 A		33 A								

ID LEGEND:
"L" DENOTES PROVISION FOR LOCKABLE BREAKER
"G" DENOTES GFCI CIRCUIT BREAKER
"A" DENOTES AFCI CIRCUIT BREAKER
"C" DENOTES COMBINATION AFCI/GFCI CIRCUIT BREAKER

LOAD CLASSIFICATION	CONNECTED LOAD	DEMAND FACTOR	DEMAND LOAD	PANEL TOTALS	
Lighting	574 VA	100.00%	574 VA		
Motor	175 VA	100.00%	175 VA	**TOTAL CONNECTED LOAD:**	9854 VA
Other	0 VA	0.00%	0 VA	**TOTAL DEMAND LOAD:**	9854 VA
Power	1001 VA	100.00%	1001 VA	**TOTAL CONNECTED CURRENT:**	27 A
Receptacle	8100 VA	100.00%	8100 VA	**TOTAL DEMAND CURENT:**	27 A

NOTES:

BRANCH PANEL: 2DP

LOCATION: ELEC 115
SUPPLY FROM:
MOUNTING: SURFACE
ENCLOSURE: NEMA 1

VOLTS: 120/208 Wye
PHASES: 3
WIRES: 4
CABINET WIDTH:

A.I.C. RATING: 42,000
MAINS TYPE: MCB
BUS RATING: 400 A
MCB RATING: 300 A

GND	WIRE	CKT	CIRCUIT DESCRIPTION	ID	TRIP	POLES	A		B		C		POLES	TRIP	ID	CIRCUIT DESCRIPTION	CKT	WIRE	GND
--	--	1					0	81					2	15 A		ACCU-2	2	12	12
		3	SPD	--	30 A	3			0	81							4		
		5									0	204	1	15 A		EF-3	6		
		7					7686	3699									8		
8	2	9	DOAS-1		100 A	3			7686	3699			3	60 A		AC-1	10	6	8
		11									7686	3699					12		
		13					552	3699									14		
12	12	15	AHU-1		15 A	3			552	3699			3	60 A		AC-1	16	6	8
		17									552	3699					18		
12	12	19	AD-1		20 A	1	120	120					1	20 A		AR-1	20	12	12
12	12	21	EF-1		15 A	1			672	1584			1	25 A		EF-2	22	10	10
12	12	23	EEWS		20 A	1					240	1250	2	25 A		EF-4	24	10	10
12	12	25	MOTORIZED DAMPERS		15 A	1	151	1250									26		
--	--	27	Spare	--	20 A	1			0	3600			1	40 A	L	EWH-1	28	8	10
--	--	29	Spare	--	20 A	1					0	3600	1	40 A	L	EWH-2	30	8	10
		31					500	0					1	20 A	--	Spare	32	--	--
8	6	33	PANEL 2FA		60 A	3			500	0			1	20 A	--	Spare	34	--	--
		35									500	0	1	20 A	--	Spare	36	--	--
		37					2746	2439									38		
8	2	39	PANEL 2A		100 A	3			3291	2149			3	100 A		PANEL 2C	40	2	8
		41									3861	2484					42		
						TOTAL LOAD:	22977 VA		27119 VA		27487 VA								
						TOTAL AMPS:	191 A		231 A		234 A								

ID LEGEND:
"L" DENOTES PROVISION FOR LOCKABLE BREAKER
"G" DENOTES GFCI CIRCUIT BREAKER
"A" DENOTES AFCI CIRCUIT BREAKER
"C" DENOTES COMBINATION AFCI/GFCI CIRCUIT BREAKER

LOAD CLASSIFICATION	CONNECTED LOAD	DEMAND FACTOR	DEMAND LOAD	PANEL TOTALS	
Lighting	610 VA	100.00%	610 VA		
Motor	57446 VA	100.00%	57446 VA	**TOTAL CONNECTED LOAD:**	77543 VA
Other	0 VA	0.00%	0 VA	**TOTAL DEMAND LOAD:**	77422 VA
Power	9925 VA	100.00%	9925 VA	**TOTAL CONNECTED CURRENT:**	215 A
Receptacle	10260 VA	98.73%	10130 VA	**TOTAL DEMAND CURENT:**	215 A

NOTES:

BRANCH PANEL: 2FA

LOCATION: COMM 114
SUPPLY FROM: 2DP
MOUNTING: SURFACE
ENCLOSURE: NEMA 1

VOLTS: 120/208 Wye
PHASES: 3
WIRES: 4
CABINET WIDTH:

A.I.C. RATING: 10,000
MAINS TYPE: MCB
BUS RATING: 100 A
MCB RATING: 60 A

GND	WIRE	CKT	CIRCUIT DESCRIPTION	ID	TRIP	POLES	A		B		C		POLES	TRIP	ID	CIRCUIT DESCRIPTION	CKT	WIRE	GND
12	12	1	FMCP	L	20 A	1	500	0					1	20 A	--	Spare	2	--	--
12	12	3	MTR	L	20 A	1			500	0			1	20 A	--	Spare	4	--	--
12	12	5	FTR	L	20 A	1					500	0	1	20 A	--	Spare	6	--	--
--	--	7	PFB	--	--	1	--	--					1	--	--	PFB	8	--	--
--	--	9	PFB	--	--	1			--	--			1	--	--	PFB	10	--	--
--	--	11	PFB	--	--	1					--	--	1	--	--	PFB	12	--	--
						TOTAL LOAD:	500 VA		500 VA		500 VA								
						TOTAL AMPS:	4 A		4 A		4 A								

ID LEGEND:
"L" DENOTES PROVISION FOR LOCKABLE BREAKER
"G" DENOTES GFCI CIRCUIT BREAKER
"A" DENOTES AFCI CIRCUIT BREAKER
"C" DENOTES COMBINATION AFCI/GFCI CIRCUIT BREAKER

LOAD CLASSIFICATION	CONNECTED LOAD	DEMAND FACTOR	DEMAND LOAD	PANEL TOTALS	
Power	1501 VA	100.00%	1501 VA		
				TOTAL CONNECTED LOAD:	1501 VA
				TOTAL DEMAND LOAD:	1501 VA
				TOTAL CONNECTED CURRENT:	4 A
				TOTAL DEMAND CURENT:	4 A

NOTES:

BRANCH PANEL: 2C

LOCATION: COMM 114
SUPPLY FROM: 2DP
MOUNTING: SURFACE
ENCLOSURE: NEMA 1

VOLTS: 120/208 Wye
PHASES: 3
WIRES: 4
CABINET WIDTH:

A.I.C. RATING: 10,000
MAINS TYPE: MCB
BUS RATING: 100 A
MCB RATING: 100 A

GND	WIRE	CKT	CIRCUIT DESCRIPTION	ID	TRIP	POLES	A		B		C		POLES	TRIP	ID	CIRCUIT DESCRIPTION	CKT	WIRE	GND
12	12	1	L-COMM		20 A	1	36	0					1	20 A	--	Spare	2	--	--
12	12	3	VAV-3		15 A	1			87	180			1	20 A		R-COMM RACK	4	12	12
12	12	5	FCU-1		15 A	2					40	2363	2	30 A		ACCU-1	6	10	10
		7					40	2363									8		
12	12	9	R-COMM		20 A	1			360	720			1	20 A		R-COMM	10	12	12
--	--	11	Spare	--	20 A	1					0	--	1	--	--	PFB	12	--	--
--	--	13	PFB	--	--	1	--	--					1	--	--	PFB	14	--	--
12	12	15	R-COMM		20 A	1			720	90			2	30 A		R-COMM RACK	16	10	10
--	--	17	PFB	--	--	1					--	90					18		
						TOTAL LOAD:	2439 VA		2149 VA		2484 VA								
						TOTAL AMPS:	21 A		18 A		21 A								

ID LEGEND:
"L" DENOTES PROVISION FOR LOCKABLE BREAKER
"G" DENOTES GFCI CIRCUIT BREAKER
"A" DENOTES AFCI CIRCUIT BREAKER
"C" DENOTES COMBINATION AFCI/GFCI CIRCUIT BREAKER

LOAD CLASSIFICATION	CONNECTED LOAD	DEMAND FACTOR	DEMAND LOAD	PANEL TOTALS	
Lighting	36 VA	100.00%	36 VA		
Motor	4893 VA	100.00%	4893 VA	**TOTAL CONNECTED LOAD:**	6938 VA
Other	0 VA	0.00%	0 VA	**TOTAL DEMAND LOAD:**	6938 VA
Receptacle	2160 VA	100.00%	2160 VA	**TOTAL CONNECTED CURRENT:**	19 A
				TOTAL DEMAND CURENT:	19 A

NOTES:

US Army Corps of Engineers ®

MARK	DESCRIPTION	DATE

ISSUE DATE: 15 OCTOBER 2025
SOLICITATION NO.: W912BA22F0002
CONTRACT NO.: W912BA19B0012

DESIGNED BY: S. BUCK, I. KAMA
DRAWN BY: S. BUCK, I. KAMA
CHECKED BY: S. TOMOKIYO
SUBMITTED BY: ISE
SIZE: ANSI D

US ARMY CORPS OF ENGINEERS
HONOLULU DISTRICT
FORT SHAFTER, OAHU, HAWAII

INSYNERGY ENGINEERING
1001 BISHOP STREET, SUITE 2500
HONOLULU, HI 96813

JOINT BASE PEARL HARBOR-HICKAM, OAHU, HAWAII
FY22 HAWAII AIR NATIONAL GUARD (HANG) F-22 PLUS-UP
ADD EGRESS SHOP
PROJECT NO.: KMND209087

PANEL SCHEDULES

SHEET ID
E-701

REVISED FINAL SUBMITTAL

MECHANICAL EQUIPMENT SCHEDULE

EQUIPMENT ID	EQUIPMENT DESCRIPTION	SPECIFIED RATING (HP / KW)	VOLTAGE / PHASE	FLA / RLA	MOCP	MCA	TERMINATION TYPE	DISCONNECT SWITCH		BRANCH CIRCUIT REQUIREMENT	REMARKS
								POLES / AMPS	ENCLOSURE		
EWH-1	INSTANT ELEC WATER HEATER	3.6 KW	120/1	30A	40A	40A	HARDWIRED	N/A	N/A	1"C, 2#8, #10GND	PROVIDE LOCKABLE CIRCUIT BREAKER
EWH-2	INSTANT ELEC WATER HEATER	3.6 KW	120/1	30A	40A	40A	HARDWIRED	N/A	N/A	1"C, 2#8, #10GND	PROVIDE LOCKABLE CIRCUIT BREAKER
AC-1	AIR COMPRESSOR	2 x 10 HP	208/3	2 x 32.2A	2 x 60A	2 x 40.25A	HARDWIRED	2 x 3P60A	NEMA 1	2 x 1"C, 3#6, #8GND	
AD-1	REFRIGERATED AIR DRYER	-	120/1	-	-	-	HARDWIRED	N/A	N/A	3/4"C, 2#12, #12GND	
AR-1	AIR RECEIVER	-	120/1	-	-	-	HARDWIRED	N/A	N/A	3/4"C, 2#12, #12GND	
EEWS	EMERGENCY EYE WASH SHOWER	-	120/1	-	-	-	HARDWIRED	N/A	N/A	3/4"C, 2#12, #12GND	
AHU-1	AIR HANDLING UNIT	1 HP	208/1	3A	15A	3.75A	HARDWIRED	2P15A	NEMA 1	3/4"C, 2#12, #12GND	
FCU-1	FAN COIL UNIT	.038KW	208/1	0.3A	15A	0.38A	HARDWIRED	2P15A	NEMA 1	3/4"C, 2#12, #12GND	
ACCU-1	AIR COOLED CONDENSING UNIT	-	208/1	13.12A	20A	16.4A	HARDWIRED	2P30A	NEMA 4X	3/4"C, 2#10, #10GND	
ACCU-2	AIR COOLED CONDENSING UNIT	-	208/1	0.36A	15A	0.45A	HARDWIRED	2P15A	NEMA 4X	3/4"C, 2#12, #12GND	
EF-1	EXHAUST FAN	1/4 HP	120/1	5.8A	15A	-	HARDWIRED	N/A	N/A	3/4"C, 2#12, #12GND	PROVIDE MANUAL MOTOR STARTER
EF-2	EXHAUST FAN	3/4 HP	120/1	13.8A	25A	-	HARDWIRED	N/A	N/A	3/4"C, 2#10, #10GND	PROVIDE MANUAL MOTOR STARTER
EF-3	EXHAUST FAN	1/15 HP	120/1	1.7A	15A	-	HARDWIRED	N/A	N/A	3/4"C, 2#12, #12GND	PROVIDE MANUAL MOTOR STARTER
EF-4	EXHAUST FAN	2 HP	208/1	13.2	25A	-	HARDWIRED	N/A	N/A	3/4"C, 2#12, #12GND	PROVIDE MANUAL MOTOR STARTER
VAV	VARIABLE VOLUME TERMINAL UNIT	-	120/1	-	-	-	HARDWIRED	N/A	N/A	3/4"C, 2#12, #12GND	PROVIDE MANUAL MOTOR STARTER
DOAS-1	DEDICATED OUTDOOR AIR SYSTEM	-	208/3	64A	100A	83.7A	HARDWIRED	3P100A	NEMA 4X	1 1/2"C, 3#2, #8GND	COMPRESSOR: (2) 27.6A/20.7A CONDENSER FAN: (2) 3.0A

A7 EQUIPMENT SCHEDULE
SCALE: NTS

US Army Corps of Engineers®

MARK	DESCRIPTION	DATE

ISSUE DATE: 15 OCTOBER 2025
SOLICITATION NO.: W9128A22F0002
CONTRACT NO.: W9128A19D0012

DESIGNED BY: I. KAMA, S. BUCK
DRAWN BY: I. KAMA, S. BUCK
CHECKED BY: S. TOMOKIYO
SUBMITTED BY: S. YO
SIZE: ANSI D

U.S. ARMY CORPS OF ENGINEERS
HONOLULU DISTRICT
FORT SHAFTER, OAHU, HAWAII

INSYNERGY ENGINEERING
1001 BISHOP STREET, SUITE 2500
HONOLULU, HI 96813

JOINT BASE PEARL HARBOR-HICKAM, OAHU, HAWAII
FY22 HAWAII AIR NATIONAL GUARD (HIANG) F-22 PLUS-UP
ADD EGRESS SHOP
PROJECT NO.: KMND208087

EQUIPMENT SCHEDULE

SHEET ID
E-801

REVISED FINAL SUBMITTAL

TABLE 7 - PULL BOX SIZING (TIA-569-C) CONFIRM SIZE ON PLAN VIEWS)				
METRIC DESIGNATOR (TRADE SIZE)	WIDTH (INCH)	LENGTH (INCH)	DEPTH (INCH)	WIDTH INCREASE FOR ADDITIONAL CONDUIT (INCH)
1"	4"	16"	3"	2"
1.5"	8"	27"	4"	4"
2"	8"	36"	4"	5"
2.5"	10"	42"	5"	6"
3"	12"	48"	5"	6"
3.5"	12"	54"	6"	6"
4"	15	60"	8"	8"

GENERAL OSP TELECOMMUNICATIONS CONDUIT INSTALLATION REQUIREMENTS:

1. UNDERGROUND INFRASTRUCTURE:

1. SUBMIT RCDD STAMP OSP SHOP DRAWINGS IN ACCORDANCE WITH SPECIFICATIONS.
2. NO MORE THAN TWO 90-DEGREE BENDS BETWEEN MAINTENANCE HOLES, HANDHOLES AND PULLBOXES.
3. ALL BENDS SHALL BE LONG, SWEEPING BENDS WITH A RADIUS NOT LESS THAN TEN TIMES THE INTERNAL DIAMETER OF CONDUIT.
4. NEW MAINTENANCE HOLES, HANDHOLES, VAULT'S AND CABINET BELL END COUPLINGS SHALL NOT HAVE A GAP BETWEEN THE ENTRY DUCT AND THE END BELL COUPLING.
5. NEW MAINTENANCE HOLES, HANDHOLES, VAULT'S AND CABINETS SHALL BE BEVELED / SMOOTHED OUT BEFORE BEING CONNECTED TOGETHER TO PREVENT CABLE DAMAGE DURING INSTALLATION AND DURING MANDREL TESTING.
6. NCTAMS OR THERE REPRESENTATIVE SHALL REVIEW AND APPROVE CONTRACTORS PROPOSED PENETRATIONS TO EXISTING AND NEW MAINTENANCE HOLES BEFORE ANY PENETRATION IS MADE.
7. PROVIDE INSULATED BUSHINGS AT ALL NEW CONDUIT TERMINATIONS.
8. CONDUITS SHALL HAVE NEW MULE TAPE AND DUCT PLUGS BEFORE MANDREL TESTING.
9. PROVIDE REMOVABLE DUCT PLUGS IN ALL NEW EXTERIOR DUCTLINES ENTERING EXISTING EMH/TMH AND AT BUILDING ENTRANCES TO MITIGATE WATER INFILTRATION INTO THE EXISTING FACILITIES.
10. CONTRACTOR WILL ENSURE 50' MAINTENANCE LOOP FOR ALL CABLES AT MAINTENANCE HOLE FEEDING BUILDING ENTRANCE FACILITIES.
11. ALL UNDERGROUND CONDUIT RUNS ENTERING BUILDING TO ENTRANCE OF MOISTURE, GASES, AND RODENTS.

GOVERNMENT COORDINATION AND TESTING:

1. PRIOR TO ANY EXCAVATION WORK, CONTRACTOR SHALL COORDINATE WITH THE GOVERNMENT. COORDINATE WITH NCTAMS BCO, HAWAII AIR NATIONAL GUARD,AND OTHER GOVERNMENT AGENCIES AS REQUIRED.
2. PRIOR TO ANY EXCAVATION WORK, CONTRACTOR SHALL COORDINATE WITH THE AT&T COMPANY. THE AT&T SERVICE PHONE NUMBER IS 808-659-1444.
3. NEWLY INSTALL MAINTENANCE HOLES, HAND HOLES, VAULT'S CABINET AND CONDUITS SHALL BE DRY AND CLEAN (I.E., FREE OF PARTICLES OF EARTH, SAND, GRAVEL, ETC.) BEFORE MANDREL TESTING. MANDREL SHALL BE TESTED IN BOTH DIRECTION AFTER CONCRETE ENCASEMENT HAS BEEN INSTALLED.
4. MANDREL USED TO TEST BETWEEN MAINTENANCE HOLES SHALL BE 12 INCH SOLID, NON-TAPERED AND 1/4" LESS IN DIAMETER THAN THE INSIDE DIAMETER OF THE CONDUIT BEING TESTED.
5. MANDREL USED TO TEST BETWEEN MAINTENANCE HOLES AND BUILDING SHALL BE 6 INCH SOLID, NON-TAPERED AND 1/4" LESS IN DIAMETER THAN THE INSIDE DIAMETER OF THE CONDUIT BEING TESTED.
6. MANDREL SHALL BE PULLED SMOOTHLY (I.E., WITHOUT STOPPING) THROUGH THE DUCT.
7. NCTAMS BCO OR THEIR REPRESENTATIVE SHALL BE ONSITE DURING MANDREL TESTING.
8. FAILURE OF THE MANDREL TESTS MAY REQUIRE THE INSTALLATION OF THE TELECOM DUCT LINES TO BE REDONE. FINAL DECISION WILL BE DETERMINED BY NCTAMS OR THEIR REPRESENTATIVE.

GENERAL INTERIOR TELECOMMUNICATIONS INSTALLATION REQUIREMENTS:

1. SUBMIT RCDD STAMPED INTERIOR SHOP DRAWINGS IN ACCORDANCE WITH THE SPECIFICATION.
2. ALL INTERIOR TELECOMMUNICATIONS SYSTEMS SHALL BE INSTALLED AND TESTED IN ACCORDANCE WITH THE APPLICABLE EDITION OF THE UFC 3-580-01 TELECOMMUNICATIONS INTERIOR INFRASTRUCTURE PLANNING AND DESIGN.
3. GROUNDING FOR THE TELECOMMUNICATIONS INFRASTRUCTURE AND CABLING SHALL BE INSTALLED AND TESTED IN ACCORDANCE WITH THE APPLICABLE EDITION OF THE UFC 3-580-01 TELECOMMUNICATIONS INTERIOR INFRASTRUCTURE PLANNING AND DESIGN.
4. PROVIDE APPROPRIATE FIRE STOPPING MEASURES FOR ALL CABLE TRAY AND CONDUIT PENETRATIONS THRU FIRE-RATED WALLS.
5. PROVIDE APPROPRIATE FIRE STOPPING MEASURES FOR ALL CABLE TRAY AND CONDUIT PENETRATIONS THRU FIRE-RATED WALLS.
6. FOR NEW CONSTRUCTION REQUIRED TO COMPLY WITH THESE STANDARDS, MOUNT ALL OVERHEAD UTILITIES AND OTHER FIXTURES WEIGHING 31 POUNDS (14 KILOGRAMS) OR MORE (EXCLUDING DISTRIBUTED SYSTEMS SUCH AS PIPING NETWORKS THAT COLLECTIVELY EXCEED THAT WEIGHT) USING EITHER RIGID OR FLEXIBLE SYSTEMS TO MINIMIZE THE LIKELIHOOD THAT THEY WILL FALL AND INJURE BUILDING OCCUPANTS. DESIGN ALL EQUIPMENT MOUNTING S TO RESIST FORCES OF 0.5 TIMES THE EQUIPMENT WEIGHT IN ANY HORIZONTAL DIRECTION AND 1.5 TIMES THE EQUIPMENT WEIGHT IN THE DOWNWARD DIRECTION. THIS STANDARD DOES NOT PRECLUDE THE NEED TO DESIGN EQUIPMENT MOUNTINGS FOR FORCES REQUIRED BY OTHER CRITERIA SUCH AS SEISMIC STANDARDS.
7. CONTRACTOR SHALL VERIFY AND COORDINATE WITH ALL TRADES FOR SPACE REQUIREMENTS AND CONNECTIONS OF AND TO ALL EQUIPMENT. SPACE ABOVE TELECOM EQUIPMENT AND CABINETS SHALL NOT HAVE FOREIGN PIPE AND DUCTS

US Army Corps of Engineers®

MARK	DESCRIPTION	DATE

ISSUE DATE: 15 OCTOBER 2025
SOLICITATION NO.: W9128A22F0002
CONTRACT NO.: W9128A19D0012

DESIGNED BY: P. TAGAL
DRAWN BY: P. TAGAL
CHECKED BY: S. TOMOKIYO
SUBMITTED BY:
SIZE: ANSI D

U.S. ARMY CORPS OF ENGINEERS
HONOLULU DISTRICT
FORT SHAFTER, OAHU, HAWAII

INSYNERGY ENGINEERING
1001 BISHOP STREET, SUITE 2500
HONOLULU, HI 96813

JOINT BASE PEARL HARBOR-HICKAM, OAHU, HAWAII
FY22 HAWAII AIR NATIONAL GUARD (HIANG) F-22 PLUS-UP
ADD EGRESS SHOP
PROJECT NO.: KWND209087

TELECOM NOTES AND LEGEND

SHEET ID
T-001

REVISED FINAL SUBMITTAL

(OSP / DATA / VOICE) TELECOMMUNICATION SYMBOL LIST / MOUNTING HEIGHT SCHEDULE				
MOUNTING HEIGHT FROM FLOOR TO		(SPECIAL MOUNTING HEIGHTS INDICATED ON PLAN)		
		SYMBOL		DESCRIPTION
TOP	℄	EXISTING	NEW	
	18"			TELECOM OUTLET BOX, DOUBLE GANG WALL MOUNTED. PROVIDE 1" CONDUIT AND (2) CATEGORY 6A CABLES DIRECTLY TO MAIN TELECOM ROOM.
				FLOOR TELECOM OUTLET BOX, DOUBLE GANG WALL MOUNTED. PROVIDE 1" CONDUIT AND (2) CATEGORY 6A CABLES DIRECTLY TO MAIN TELECOM ROOM.
	48" UON			TELEPHONE (POTS) OUTLET, WALL MOUNTED WITH MOUNTING BRACKET AND ONE UTP CAT6 VOICE JACK. PROVIDE 1" CONDUIT AND (1) CATEGORY 6A CABLES DIRECTLY TO MAIN TELECOM ROOM.
			1	NOTE INDICATOR
			A1	DETAIL INDICATOR: LETTER INDICATES ROW. NUMBER INDICATES COLUMN
				TELECOMMUNICATION MAINTENANCE HOLE / HANDHOLE
			C	TELECOMMUNICATION DUCT LINE
	48" UON			PANEL / ENCLOSURE, WALL MOUNTED, REVIEW FLOOR PLANS FOR SYSTEM TYPE AND INFORMATION.

(ESS) TELECOMMUNICATION SYMBOL LIST / MOUNTING HEIGHT SCHEDULE			
MOUNTING HEIGHT FROM FLOOR TO		(SPECIAL MOUNTING HEIGHTS INDICATED ON PLAN)	
		SYMBOL	DESCRIPTION
TOP	℄	NEW	
	SEE DETAILS	ESS	ESS ACS / IDS SECURED DOOR. REFER TO SECURITY DETAIL SHEETS, DEDICATED PATHWAY HOMERUN TO ESS HEADEND AT TELECOM ROOM
	SEE DETAILS	CR	CARD READER OUTLET BOX

TELECOMMUNICATION ABBREVIATIONS	
ACS	ACCESS CONTROL SYSTEM
A.F.F.	ABOVE FINISHED FLOOR
A/V	AUDIO VISUAL
BET	BUILDING ENTRANCE TERMINAL
CAT6A	CATEGORY 6A
CCTV	CLOSED CIRCUIT TELEVISION
CR	CONFERENCE ROOM
ESS	ELECTRONIC SECURITY SYSTEM
GE	GROUNDING EQUALIZER
GND	GROUND
IDS	INTRUSION DETECTION SYSTEM
JB	JUNCTION BOX
MAX	MAXIMUM
MIN	MINIMUM
NIC	NOT IN CONTRACT
NIPR	NON-SECURE INTERNET PROTOCOL
OSP	OUTSIDE PLANT
PBB	PRIMARY BONDING BUSBAR
POTS	PLAIN OLD TELEPHONE SERVICE
RBB	RACK BONDING BUSBAR
RBC	RACK BONDING CONDUCTOR
RCDD	REGISTERED COMMUNICATION DISTRIBUTION DESIGNER
RF	RADIO FREQUENCY
SBB	SECONDARY BONDING BUSBAR
SM	SINGLE MODE
TBB	TELECOMMUNICATIONS BONDING BACKBONE
TBC	TELECOMMUNICATIONS BONDING CONDUCTOR
TEBC	TELECOMMUNICATIONS EQUIPMENT BONDING CONDUCTOR
THH	TELECOMMUNICATION HANDHOLE
TMH	TELECOMMUNICATION MAINTENANCE HOLE
TR	TELECOMMUNICATION ROOM
TYP	TYPICAL
UTP	UNSHIELDED TWISTED PAIR
UON	UNLESS OTHERWISE NOTED

US Army Corps of Engineers®

MARK	DESCRIPTION	DATE

ISSUE DATE: 15 OCTOBER 2025
SOLICITATION NO.: W9128A22F0002
CONTRACT NO.: W9128A19D0012

DESIGNED BY: P. TAGAL
DRAWN BY: P. TAGAL
CHECKED BY: S. TOMOKIYO
SUBMITTED BY:
SIZE: ANSI D

U.S. ARMY CORPS OF ENGINEERS
HONOLULU DISTRICT
FORT SHAFTER, OAHU, HAWAII

INSYNERGY ENGINEERING
1001 BISHOP STREET, SUITE 2500
HONOLULU, HI 96813

JOINT BASE PEARL HARBOR-HICKAM, OAHU, HAWAII
FY22 HAWAII AIR NATIONAL GUARD (HIANG) F-22 PLUS-UP
ADD EGRESS SHOP
PROJECT NO.: KWND209087

TELECOMMUNICATION LIST, ABBREVIATIONS

SHEET ID
T-002

REVISED FINAL SUBMITTAL

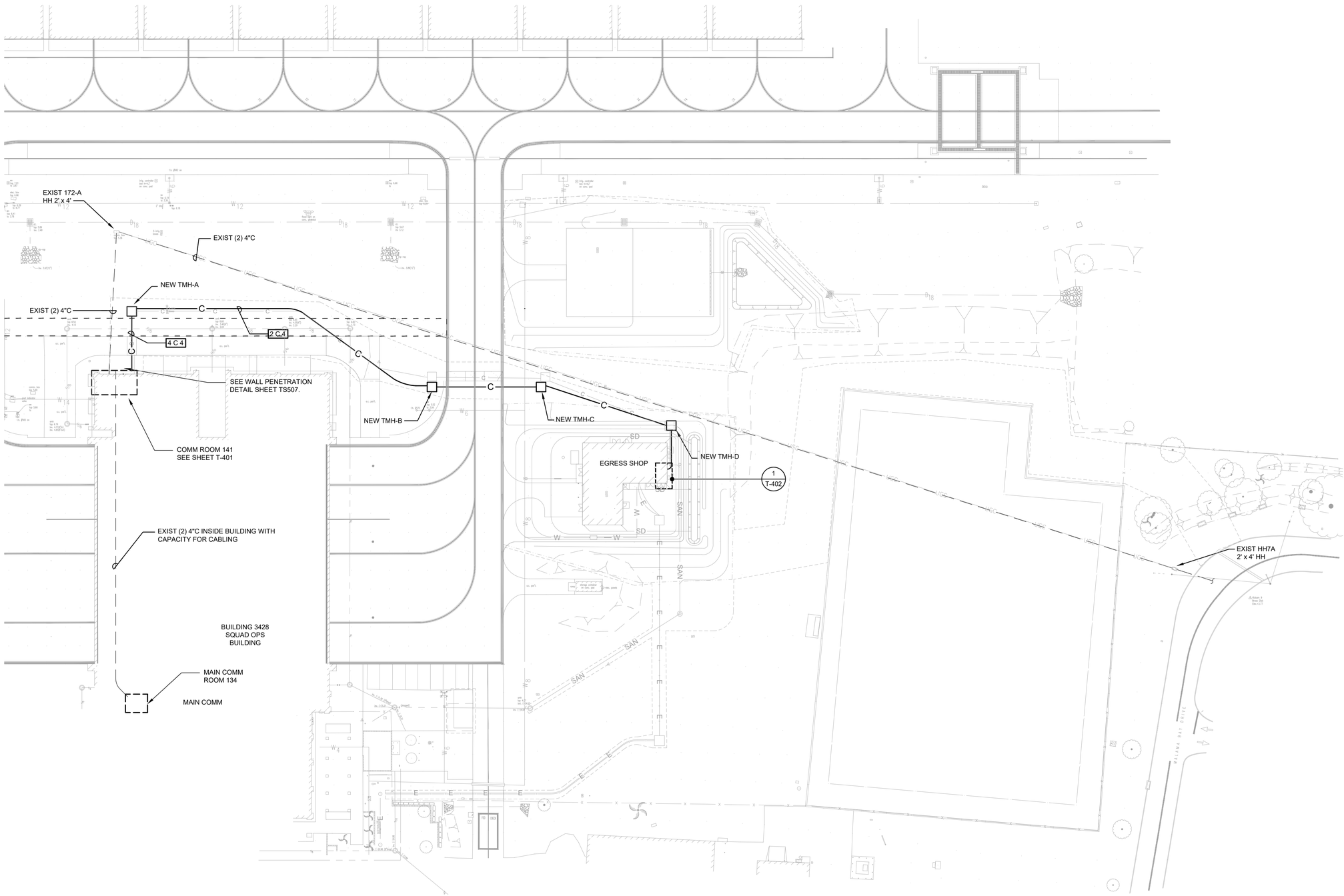

A1 TELECOMMUNICATIONS SITE PLAN - EGRESS BUILDING

SCALE: 1" = 40'

US Army Corps of Engineers®

MARK	DESCRIPTION	DATE

DESIGNED BY: I. KAMA, S. BUCK	ISSUE DATE: 15 OCTOBER 2025
DRAWN BY: I. KAMA, S. BUCK	SOLICITATION NO.: W9128A22F0002
CHECKED BY: S. TOMOKIYO	CONTRACT NO.: W9128A19D0012
SUBMITTED BY:	
SIZE: ANSI D	

U.S. ARMY CORPS OF ENGINEERS
HONOLULU DISTRICT
FORT SHAFTER, OAHU, HAWAII

INSYNERGY ENGINEERING
1001 BISHOP STREET, SUITE 2500
HONOLULU, HI 96813

JOINT BASE PEARL HARBOR-HICKAM, OAHU, HAWAII
FY22 HAWAII AIR NATIONAL GUARD (HIANG) F-22 PLUS-UP
ADD EGRESS SHOP
PROJECT NO.: KAWD209007

TELECOMMUNICATIONS SITE PLAN - EGRESS BUILDING

SHEET ID

TS101

REVISED FINAL SUBMITTAL

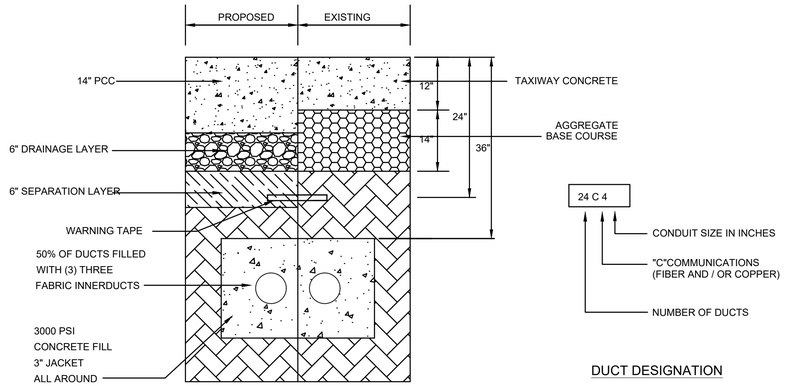

K1 TYPICAL TAXIWAY DUCT SECTION

SCALE: NTS

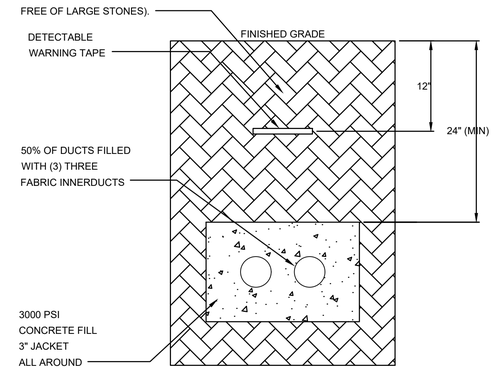

K10 TYPICAL DUCT SECTION

SCALE: NTS

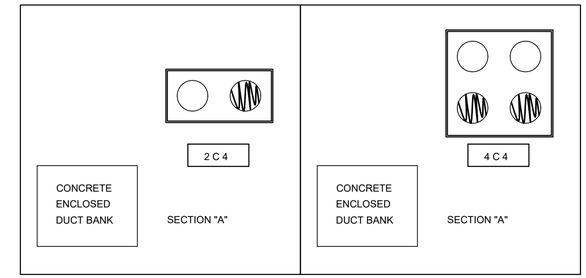

K15 TYPICAL DUCT SECTION

SCALE: NTS

NOTES:

1. PROVIDE 3" OF SEPARATION BETWEEN DUCTS.
2. AT UTILITY CROSSINGS A MINIMUM OF 12" OF SEPARATION BETWEEN OTHER UTILITIES SHALL BE MAINTAINED.
3. ALL NEWLY INSTALLED DUCTS SHALL BE ROD AND MANDRELLED. CABLE PULLING ROPES SHALL BE PROVIDED IN ALL NEWLY INSTALLED DUCTS.
4. DUCT SEPARATION REQUIREMENTS:
   ELEC TO ELEC..... 2"
   ELEC TO COMM.....4"
   COMM TO COMM.....3"

   PROVIDE DUCT SPACERS TO MAINTAIN SEPARATION.
5. SEE PLANS OR DIAGRAMS FOR SIZE & NUMBER OF DUCTS. FLATTEN DUCT BANK AS REQUIRED TO PASS OVER OR UNDER EXISTING AND NEW UTILITIES.
6. ALL BENDS AND CHANGES IN DIRECTION OF DUCTBANK SHALL USE LONG RADIUS BENDS. SHARP TURNS OR BENDS SHALL NOT BE USED.
7. PLASTIC SPACERS SHALL BE USED IN DUCTBANKS THAT INCLUDE MULTIPLE DUCTS. SPACING BETWEEN PLASTIC SPACERS SHALL BE PER MANUFACTURERS RECOMMENDATION.
8. WHERE DUCTBANK CROSSES EXISTING ROADWAYS AND / OR TAXIWAYS THE TRENCH SHALL BE CUT THROUGH THE ROADWAYS AND / OR TAXIWAYS AND PATCHED AND REPLACED IN KIND. CORRDINATE WITH CIVIL DRAWINGS PRIOR TO ANY CUTTING WORK.
9. FIFTY PERCENT OF ALL CONDUITS IN EACH DUCTBANK SHALL CONTAIN THREE (3) FABRIC-MESH INNERDUCTS EACH CONTAINING THREE (3) 3" CELLS FOR A TOTAL OF NINE (9) SUBDUCTS PER CONDUIT. EACH FABRIC-MESH INNERDUCT SHALL CONTAIN DETECTABLE TRACER WIRE, INDIVIDUAL CELL IDENTIFIERS AND PULL STRINGS.
10. COPPER AND FIBER CABLES TO BE PROVIDED INSIDE THEIR OWN RESPECTIVE CONDUITS ONLY. FOR DUCT BANKS LARGER THEN 2W x 2H DUCT RUNS, PROVISION ALL COPPER CABLES IN LOWER DUCTS ONLY. PROVISION ALL FIBER OPTIC CABLES IN UPPER DUCTS ONLY.

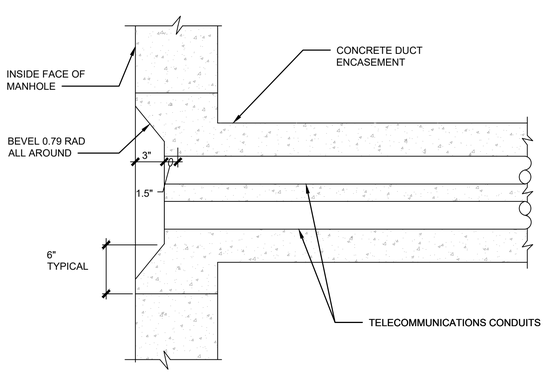

DUCT PENETRATION AT EXISTING / NEW TMH

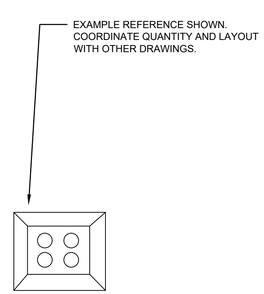

EXISTING / NEW TMH ENTRY FACE

A1 TYPICAL DUCT ENTRANCE DETAILS

SCALE: NTS

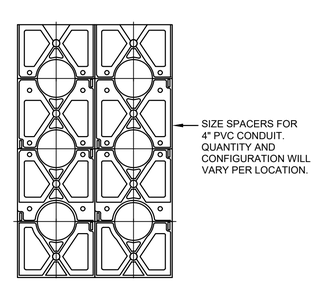

A9 DUCT SPACERS DETAIL

SCALE: NTS

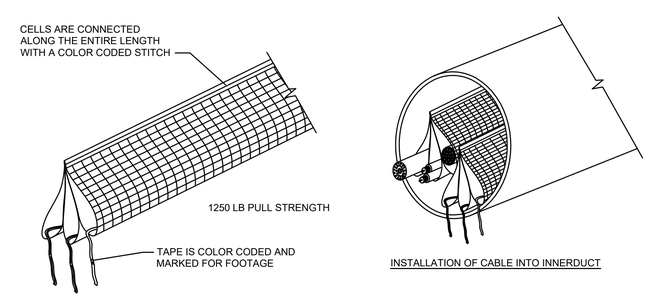

INSTALLATION OF CABLE INTO INNERDUCT

FABRIC INNERDUCT

1. 3" FABRIC 3 CELL WITH FLEXIBLE CABLEWAYS.
2. MAX CABLE DIAMETER PER CELL IS 1".
3. PROVIDE DETECTABLE TRACER WIRE, INDIVIDUAL CELL IDENTIFIERS AND PULL STRINGS IN EACH FABRIC INNERDUCT.

INNERDUCT TRIPLE PACK INSTALL

A15 INNERDUCT DETAIL

SCALE: NTS

US Army Corps of Engineers®

MARK	DESCRIPTION	DATE

ISSUE DATE: 15 OCTOBER 2025
SOLICITATION NO.: W9128A22F0002
CONTRACT NO.: W9128A19D0012

DESIGNED BY: P. TAGAL
DRAWN BY: P. TAGAL
CHECKED BY: S. TOMOKIYO
SUBMITTED BY:
SIZE: ANSI D

U.S. ARMY CORPS OF ENGINEERS
HONOLULU DISTRICT
FORT SHAFTER, OAHU, HAWAII

INSYNERGY ENGINEERING
1001 BISHOP STREET, SUITE 2500
HONOLULU, HI 96813

JOINT BASE PEARL HARBOR-HICKAM, OAHU, HAWAII
FY22 HAWAII AIR NATIONAL GUARD (HIANG) F-22 PLUS-UP
ADD EGRESS SHOP
PROJECT NO.: KMND209007

DUCT SECTION DETAILS

SHEET ID
TS501

REVISED FINAL SUBMITTAL

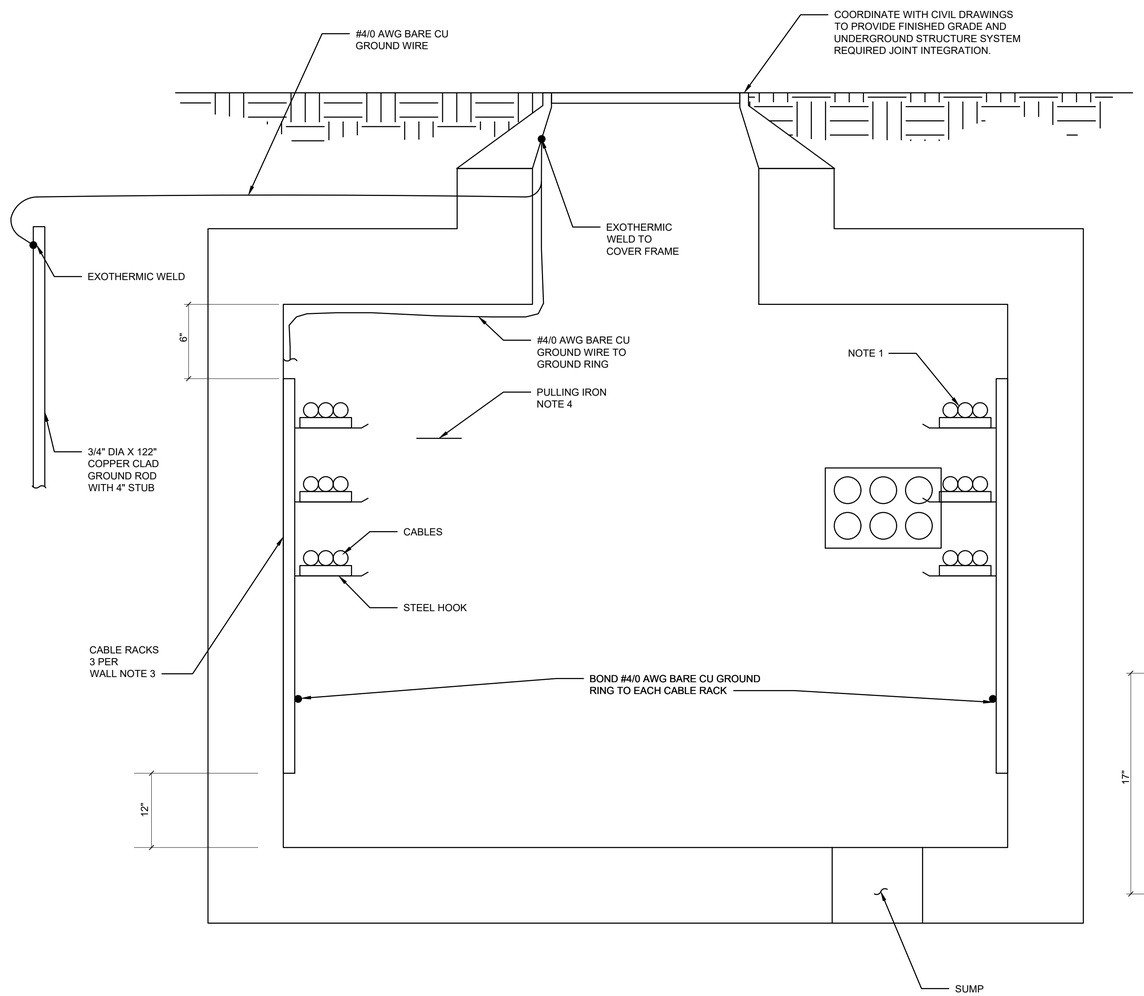

NOTES:

1. AT CABLE SPLICES ENCLOSURES, CONNECT SHIELDS TO GROUND RING W/ #6 AWG BARE CU.
2. SEE SHEET TS504 FOR STRUCTURAL DETAILS.
3. LOCATE CABLE RACKS 30" FROM ADJACENT WALL, EXCEPT VARY TO AVOID DUCT BANK ENTRANCE.
4. PROVIDE PULLING IRON OPPOSITE EACH DUCT BANK ENTRANCE.
5. ALL METALLIC EQUIPMENT SHALL BE BONDED TO GROUND SO THEY ARE AT THE SAME POTENTIAL.

A1 MAINTENANCE HOLE EQUIPMENT DETAIL
SCALE: NTS

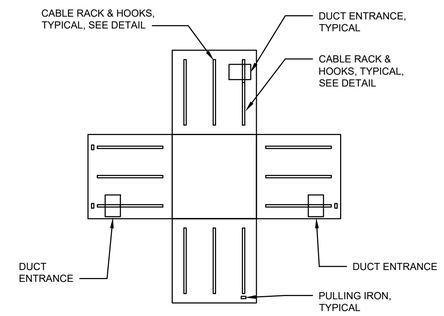

J11 TYPICAL MAINTENANCE HOLE DEVELOPMENT PLAN
SCALE: NTS

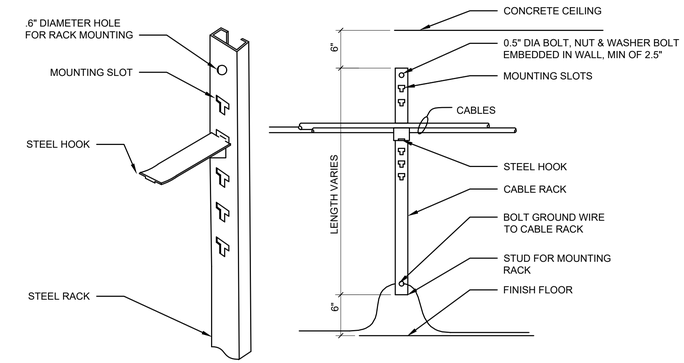

NOTES:

1. ALL STEEL PARTS SHALL BE HOT DIPPED GALVANIZED AFTER FABRICATION.
2. PROVIDE MINIMUM OF 3 CABLE RACKS PER RACKING WALL OF EACH NEW MANHOLE. PROVIDE ADDITIONAL RACKS IN EXISTING MAINTENANCE HOLES & HANDHOLES TO PROPERLY RERACK CABLES AS REQUIRED.

J15 TYPICAL CABLE RACK
SCALE: NTS

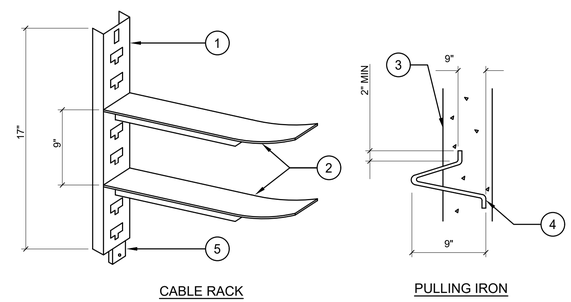

CABLE RACK

PULLING IRON

ITEM	BILL OF MATERIALS
1	CABLE RACK (HOT DIP GALVANIZED)
2	STEEL HOOK (HOT DIP GALVANIZED)
3	THICK CONCRETE WALL AT 4000 PSI
4	PULLING IRON 1" DIA (HOT DIP GALVANIZED)
5	SLOT FOR 0.5" BOLT AND LEAD ANCHOR

NOTES:

1. PULLING IRON LOCATION IS ALWAYS OPPOSITE TO CONDUIT ENTRANCE.
2. PENETRATION POINT DESIGNATIONS ARE BASED ON THE MAINTENANCE HOLE LOCATION AS SHOWN ON THE CONSTRUCTION DRAWINGS. THE CONTRACTOR SHALL SUBMIT SHOP DRAWINGS FOR EACH MAINTENANCE HOLE TO CONTRACTING OFFICER FOR APPROVAL PRIOR TO FABRICATION.

A11 CABLE RACK INSULATOR AND PULLING IRON DETAILS
SCALE: NTS

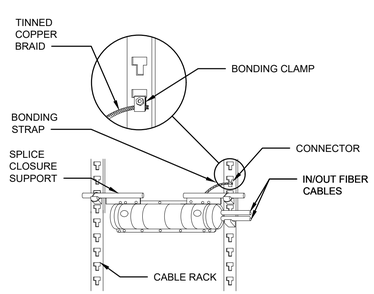

A6 MAINTENANCE HOLE RACKING DETAIL
SCALE: NTS

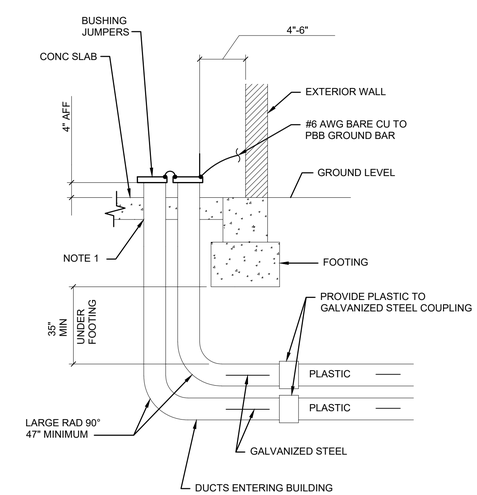

NOTE:

1. SEAL AROUND CONDUITS AT PENETRATION THROUGH VAPOR BARRIER (NOT SHOWN) IF REQUIRED.

A16 BUILDING CONDUIT ENTRY
SCALE: NTS

US Army Corps of Engineers®

MARK	DESCRIPTION	DATE

ISSUE DATE: 15 OCTOBER 2025
SOLICITATION NO.: W9128A22F0002
CONTRACT NO.: W9128A19D0012

DESIGNED BY: P. TAGAL
DRAWN BY: P. TAGAL
CHECKED BY: S. TOMOKIYO
SUBMITTED BY:
SIZE: ANSI D

U.S. ARMY CORPS OF ENGINEERS
HONOLULU DISTRICT
FORT SHAFTER, OAHU, HAWAII

INSYNERGY ENGINEERING
1001 BISHOP STREET, SUITE 2500
HONOLULU, HI 96813

JOINT BASE PEARL HARBOR-HICKAM, OAHU, HAWAII
FY22 HAWAII AIR NATIONAL GUARD (HIANG) F-22 PLUS-UP
ADD EGRESS SHOP
PROJECT NO.: KMND209007

TELECOM DETAILS

SHEET ID
TS502

REVISED FINAL SUBMITTAL

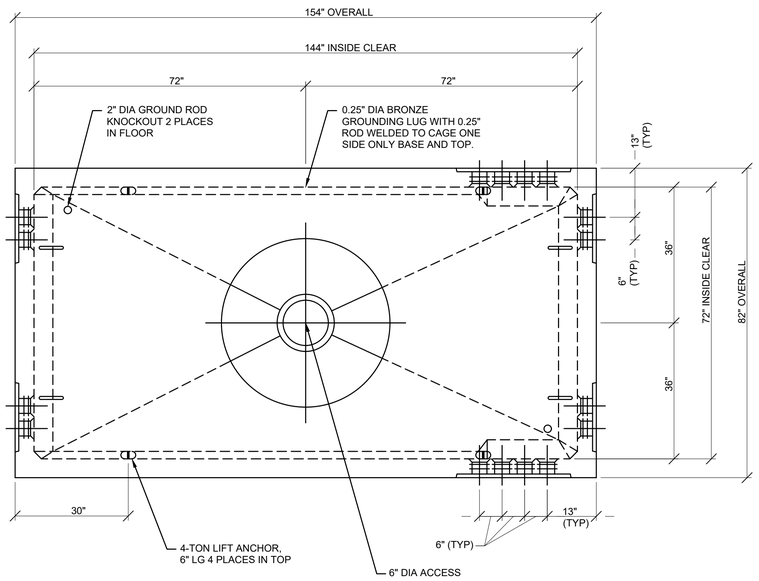

MAINTENANCE HOLE NOTES:

1. MAINTENANCE HOLE SHALL COMPLY WITH HL-93 AASHTO WHEEL LOADING, CONCRETE COMPRESSIVE STRENGTH OH 4,500 PSI @ 1.5" DAYS.
2. DESIGN OF PRECAST MAINTENANCE HOLE SHALL BE BY LICENSED STRUCTURAL ENGINEER. CONTRACTOR SHALL SUBMIT SHOP DRAWINGS SEALED AND SIGNED BY A LICENSED STRUCTURAL ENGINEER.
3. THE PRECAST CONCRETE COMPANY SHALL BE CERTIFIED BY THE NATIONAL PRECAST CONCRETE ASSOCIATION'S (NPCA) PLANT CERTIFICATION PROGRAM PRIOR TO AND DURING PRODUCTION OF THE PRODUCT FOR THIS PROJECT.
4. TREAT INTERIOR AND EXTERIOR SURFACES (BY THE CONTRACTOR INSTALLING THE PRECAST UNIT) WITH A CEMENT BASED HEAVY DUTY WATERPROOF COATING TO FORM A LIQUID TIGHT SEAL.
5. SPARE DUCTS ENTERING MAINTENANCE HOLE SHALL BE SEALED UTILIZING MECHANICAL SCREW-TYPE REUSABLE DUCT PLUGS.
6. ENSURE SPARE DUCT TERMINATORS ARE NOT OBSTRUCTED BY CONCRETE ENCASEMENT.
7. FOR DUCTS TRANSITIONING FROM THE LOWER DUCT WINDOW OF MAINTENANCE HOLE TO THE NOMINAL TRENCH DEPTH, THE TRANSITION SHALL BE ACCOMPLISHED IN NO LESS THAN 9 LINEAR METERS FROM THE HOLE IN ORDER TO REDUCE THE RADIUS OF THE BENDS.
8. INSTALL CABLE RACKS PER DETAIL C4 ON SHEET TS502.
9. INSTALL .75" DIAMETER, 120" LONG GROUND ROD IN FLOOR OF MAINTENANCE HOLE. 4" (+/- 1.2") SHALL EXTEND ABOVE THE FINISHED FLOOR LEVEL. THE ROD SHALL NOT ENTER THE MAINTENANCE HOLE MORE THAN 7.2" OR LESS THAN 2" FROM THE VERTICAL SURFACE OF THE ADJACENT WALL.
10. A BONDING RIBBON SHALL BE INSTALLED IN MAINTENANCE HOLE. THE BONDING RIBBON SHALL BE ATTACHED TO ALL RACK ANCHORS AND BE PRECAST INTO THE MAINTENANCE HOLE. INSTALL THE BONDING RIBBON AROUND THE INTERIOR OF THE MAINTENANCE HOLE SO THAT SPLICE CASES CAN BE BONDED TO IT.
11. CONDUITS ENTERING MAINTENANCE HOLE DUCT TERMINATORS SHALL BE INSTALLED FROM THE BOTTOM POSITIONS AND SPLAYED UPWARDS.

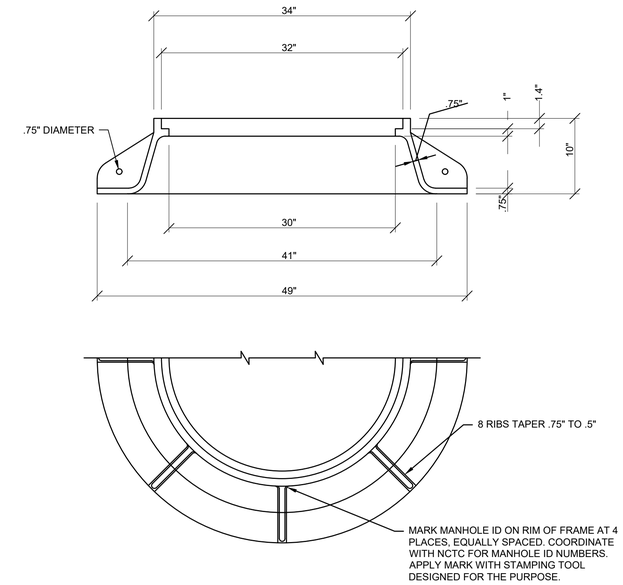

FRAME

H1 TELECOMMUNICATIONS MAINTENANCE HOLE

SCALE: NTS

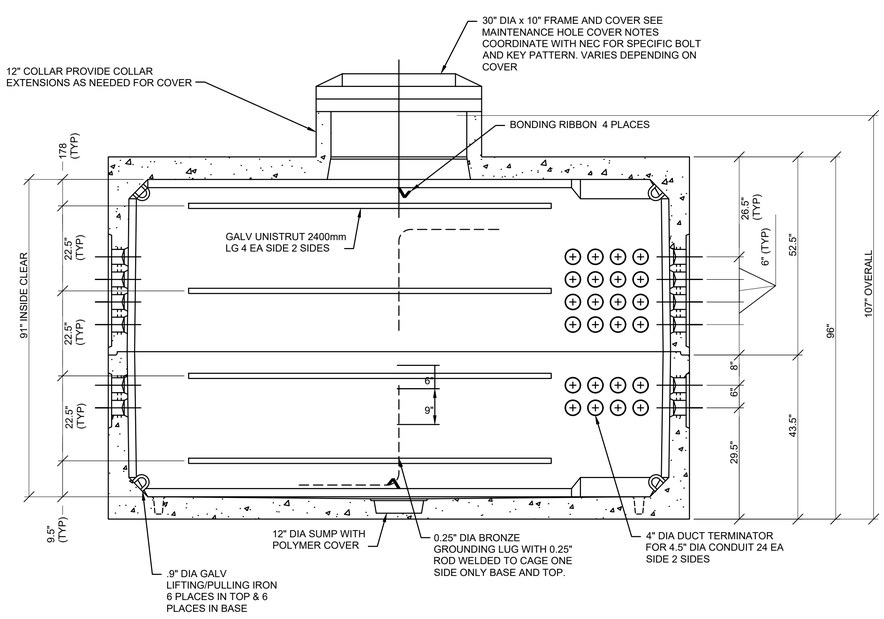

A1 MAINTENANCE HOLE SECTION

SCALE: NTS

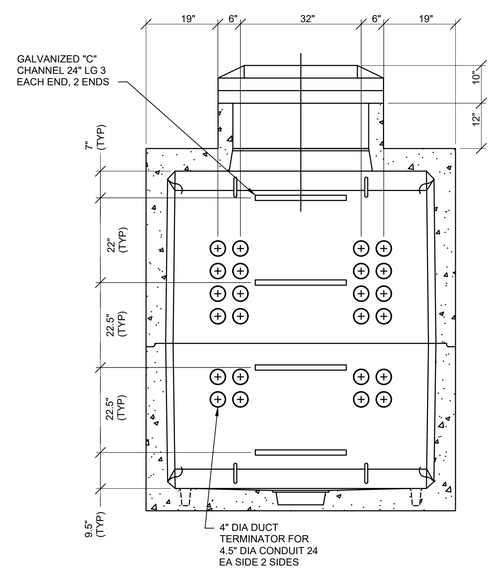

A10 MAINTENANCE HOLE SECTION

SCALE: NTS

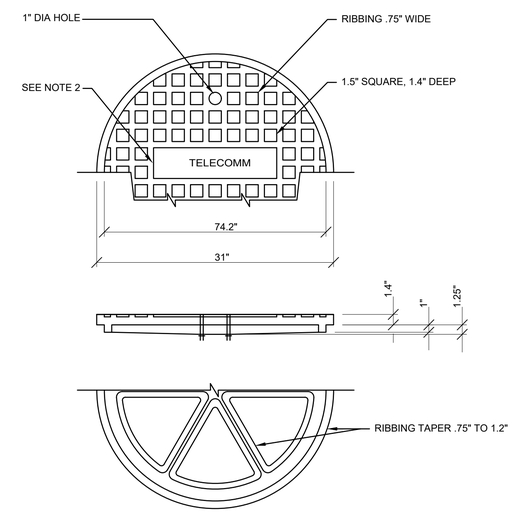

COVER

NOTES:

1. MANHOLE FRAMES AND COVERS SHALL BE RATED FOR H20 WHEEL LOADS IN ACCORDANCE WITH AASHTO HB, 12.
2. LETTER BLOCKS 1.25" WIDE, 2' HIGH LETTERS, .4" WIDE IDENTIFY AS TELECOM".

A15 MAINTENANCE/HANDHOLE COVER DETAIL

SCALE: NTS

US Army Corps of Engineers®

MARK	DESCRIPTION	DATE

ISSUE DATE: 15 OCTOBER 2025
SOLICITATION NO.: W9128A22F0002
CONTRACT NO.: W9128A19D0012

DESIGNED BY: P. TAGAL
DRAWN BY: P. TAGAL
CHECKED BY: S. TOMOKIYO
SUBMITTED BY:
SIZE: ANSI D

U.S. ARMY CORPS OF ENGINEERS
HONOLULU DISTRICT
FORT SHAFTER, OAHU, HAWAII

INSYNERGY ENGINEERING
1001 BISHOP STREET, SUITE 2500
HONOLULU, HI 96813

JOINT BASE PEARL HARBOR-HICKAM, OAHU, HAWAII
FY22 HAWAII AIR NATIONAL GUARD (HIANG) F-22 PLUS-UP
ADD EGRESS SHOP
PROJECT NO.: KMND209087

TELECOM MAINTENANCE HOLE DETAILS

SHEET ID
TS503

REVISED FINAL SUBMITTAL

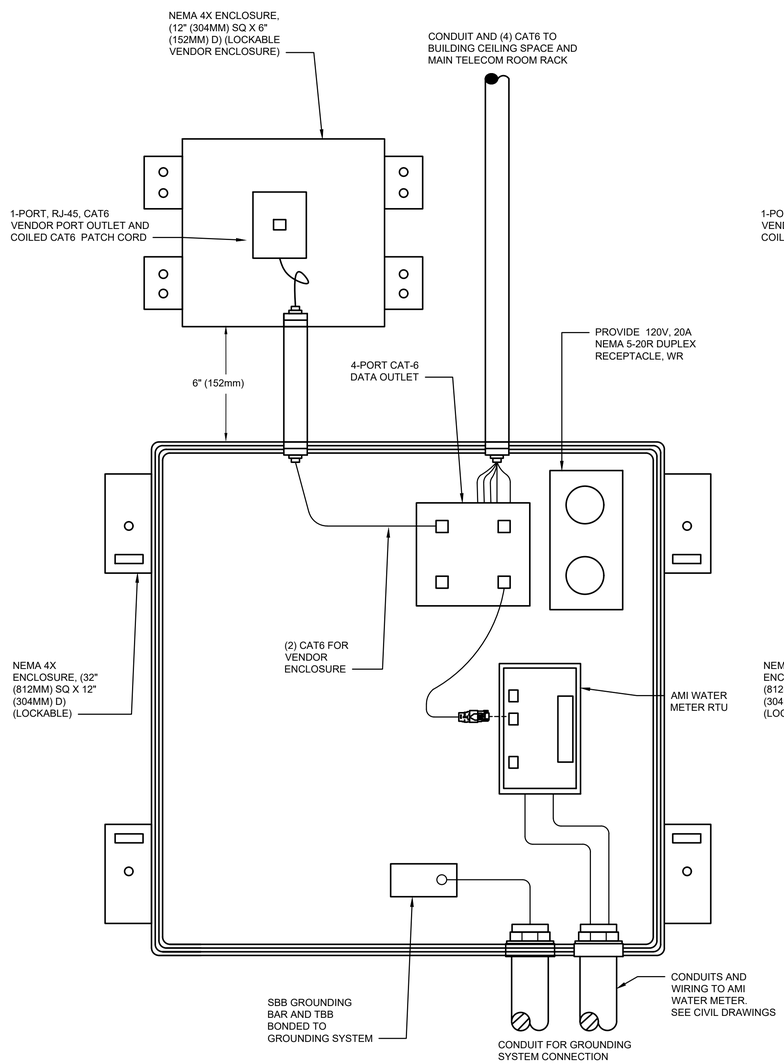

A1 TELECOMMUNICATION - AMI WATER METER DETAIL
SCALE: NTS

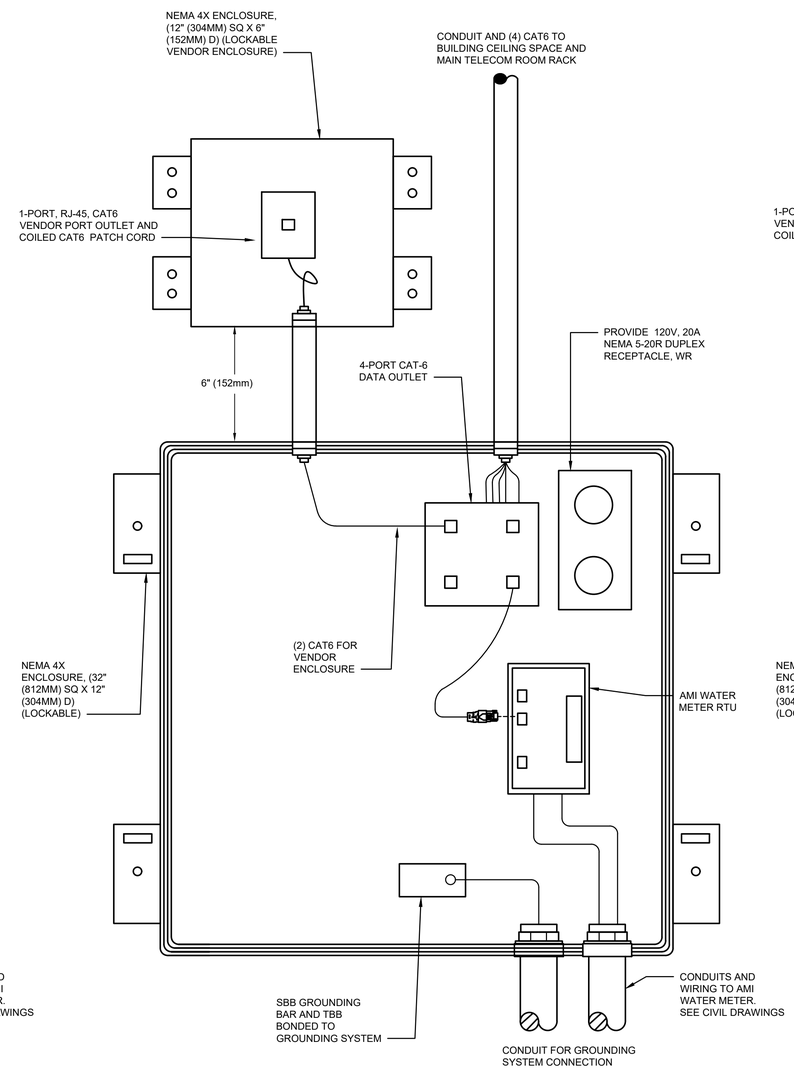

A9 TELECOMMUNICATIONS - AMI ELECTRICAL METER DETAIL
SCALE: NTS

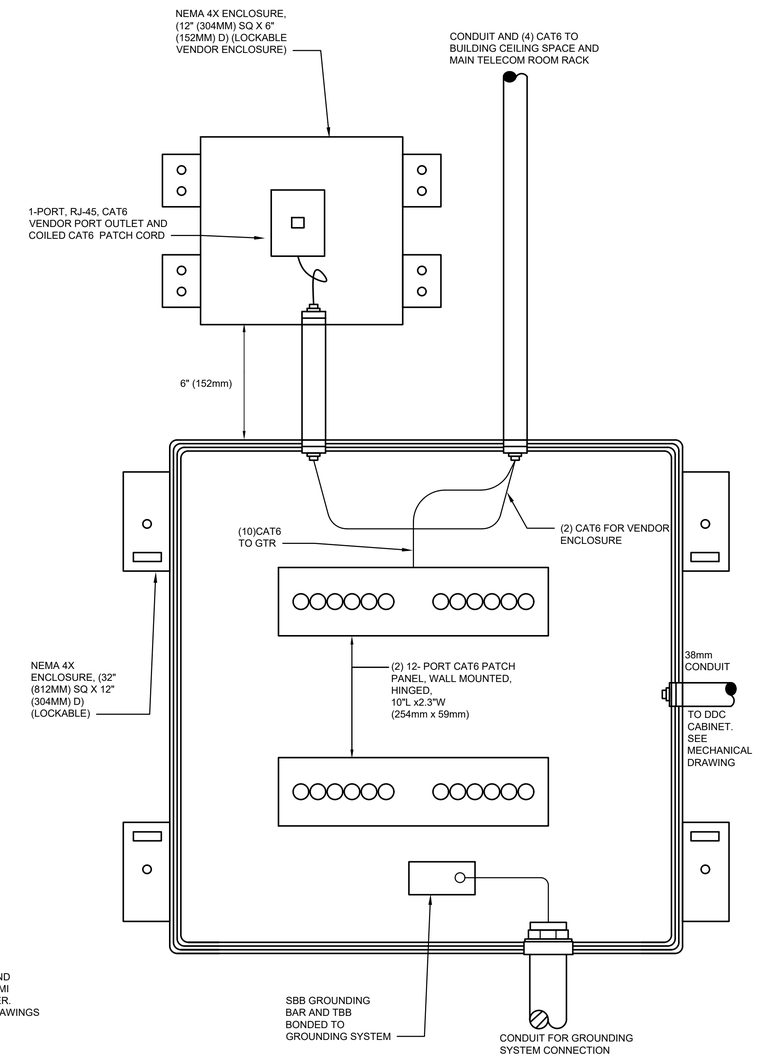

A15 TELECOMMUNICATIONS - MECHANICAL RM ICS / FRCS ENCLOSURE DETAIL FOR DDC
SCALE: NTS

US Army Corps of Engineers®

MARK	DESCRIPTION	DATE

ISSUE DATE: 15 OCTOBER 2025
SOLICITATION NO.: W9128A22F0002
CONTRACT NO.: W9128A19D0012

DESIGNED BY: P. TAGAL
DRAWN BY: P. TAGAL
CHECKED BY: S. TOMOKIYO
SUBMITTED BY: S. TOMOKIYO
SIZE: ANSI D

U.S. ARMY CORPS OF ENGINEERS
HONOLULU DISTRICT
FORT SHAFTER, OAHU, HAWAII

INSYNERGY ENGINEERING
100 BISHOP STREET, SUITE 2500
HONOLULU, HI 96813

JOINT BASE PEARL HARBOR-HICKAM, OAHU, HAWAII
FY22 HAWAII AIR NATIONAL GUARD (HIANG) F-22 PLUS-UP
ADD EGRESS SHOP
PROJECT NO.: KMN020907

TELECOM DETAILS

SHEET ID
TS504

REVISED FINAL SUBMITTAL

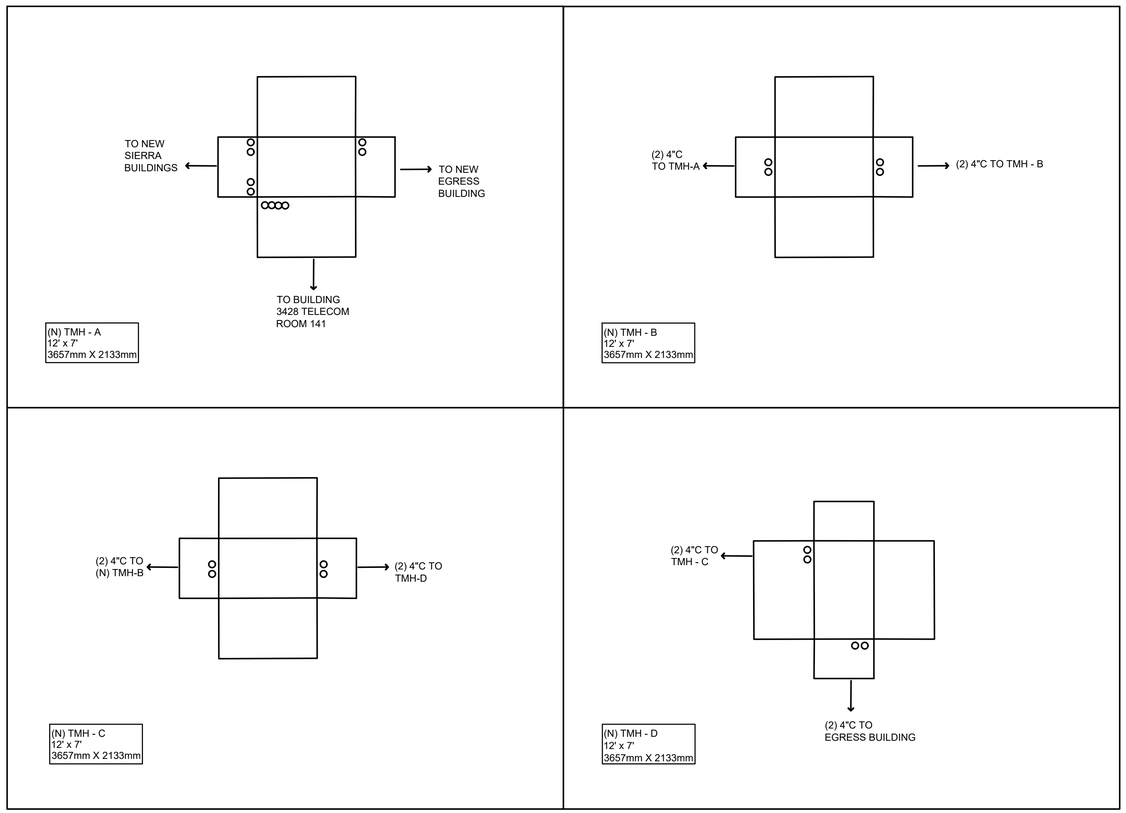

A7 TELECOMMUNICATIONS SITE DETAILS - EGRESS BUILDING

SCALE: NTS

GENERAL NOTES

1. PHASE 1: TONE AND SURVEY EXIST (2) 4"C RUN OUT TO EXISTING HH 7A TO CONFIRM EXACT ROUTE.
2. ALL DUCTS SHOWN ON THIS SHEET ARE CONNECTED TO 4" (OSP) OUTSIDE PLANT CONCRETE ENCLOSED DUCT BANKS.
3. FOR SPARE DUCTS NOT SHOWN ON THIS SHEET, SEE OTHER OUTSIDE PLANT DETAIL SHEETS FOR SPARE DUCTS TO BE SEALED UTILIZING DUCT PLUGS.
4. PROVISION ALL DUCTS WITH COPPER CABLING TO UTILIZE THE THE LOWEST POSSIBLE WINDOWS ON A TMH / THH WALL. PROVISION FIBER CABLING, SPARE AND SEALED DUCTS ON HIGHER WINDOWS IN THAT PRIORITY. (TYPICAL FOR ALL TMH / THH WALLS.

KEYNOTES

US Army Corps of Engineers®

MARK	DESCRIPTION	DATE

ISSUE DATE: 15 OCTOBER 2025
SOLICITATION NO.: W9128A22F0002
CONTRACT NO.: W9128A19D0012

DESIGNED BY: P. TAGAL
DRAWN BY: P. TAGAL
CHECKED BY: S. TOMOKIYO
SUBMITTED BY:
SIZE: ANSI D

U.S. ARMY CORPS OF ENGINEERS
HONOLULU DISTRICT
FORT SHAFTER, OAHU, HAWAII

INSYNERGY ENGINEERING
1001 BISHOP STREET, SUITE 2500
HONOLULU, HI 96813

JOINT BASE PEARL HARBOR-HICKAM, OAHU, HAWAII
FY22 HAWAII AIR NATIONAL GUARD (HIANG) F-22 PLUS-UP
ADD EGRESS SHOP
PROJECT NO.: KMN020987

TELECOMMUNICATIONS DETAILS

SHEET ID
TS505

REVISED FINAL SUBMITTAL

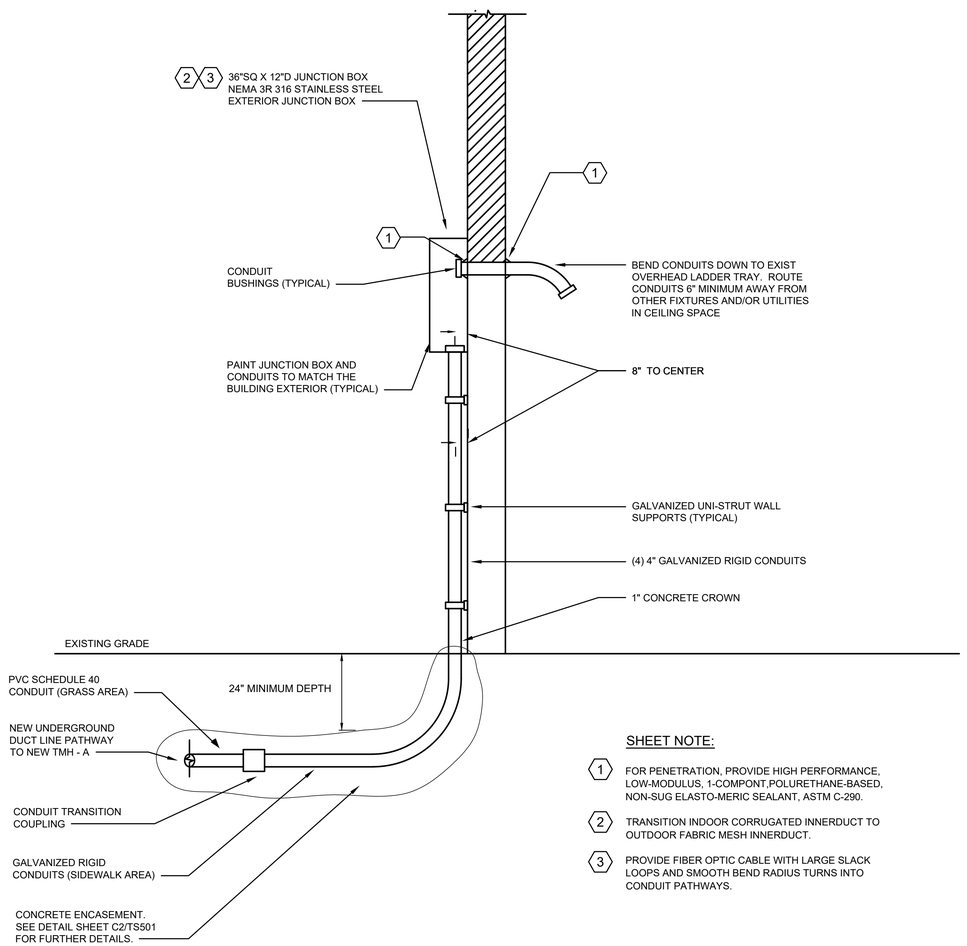

SHEET NOTE:

1. FOR PENETRATION, PROVIDE HIGH PERFORMANCE, LOW-MODULUS, 1-COMPONT,POLURETHANE-BASED, NON-SUG ELASTO-MERIC SEALANT, ASTM C-290.
2. TRANSITION INDOOR CORRUGATED INNERDUCT TO OUTDOOR FABRIC MESH INNERDUCT.
3. PROVIDE FIBER OPTIC CABLE WITH LARGE SLACK LOOPS AND SMOOTH BEND RADIUS TURNS INTO CONDUIT PATHWAYS.

A1 B3428 CONDUIT ELEVATION DETAIL
SCALE: NTS

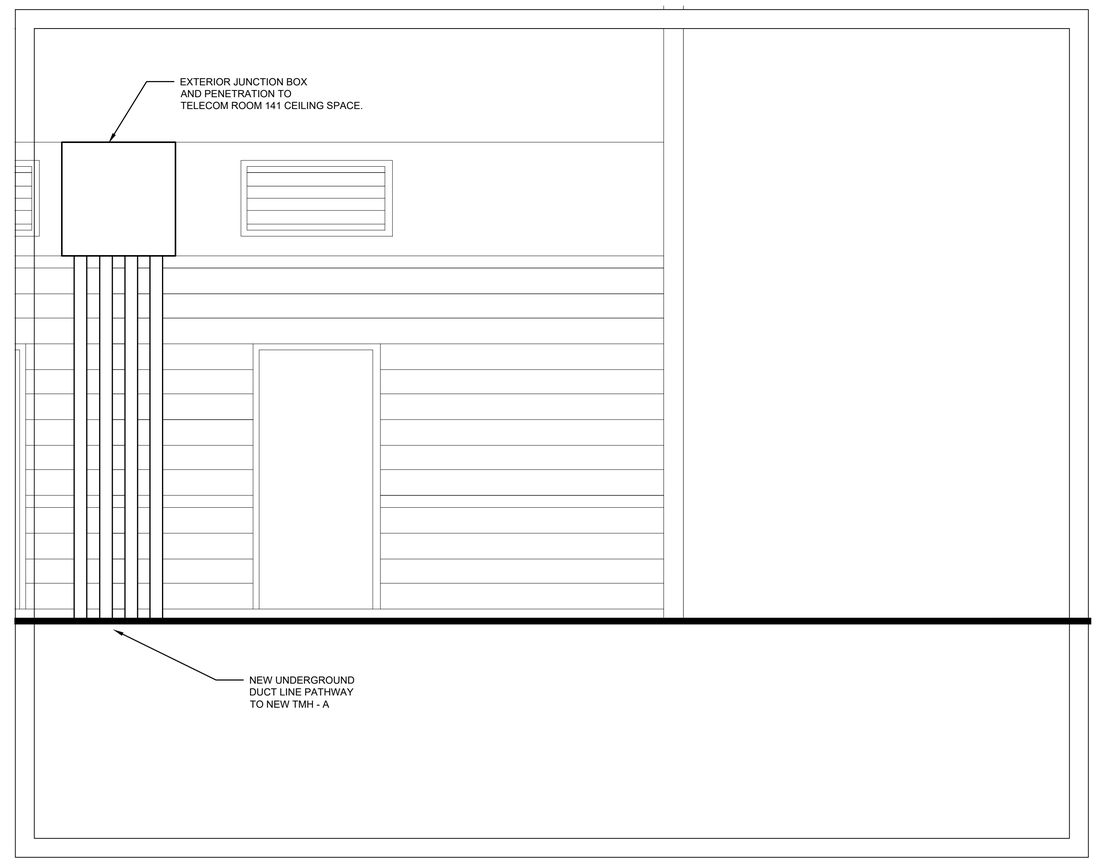

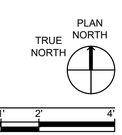

A11 TELECOMMUNICATIONS - EXIST B3428 NORTH ELEVATION PLAN
SCALE: 1/2" = 1'-0"

US Army Corps of Engineers®

MARK	DESCRIPTION	DATE

ISSUE DATE: 15 OCTOBER 2025
SOLICITATION NO.: W9128A22F0002
CONTRACT NO.: W9128A19D0012

DESIGNED BY: P. TAGAL
DRAWN BY: P. TAGAL
CHECKED BY: S. TOMOKIYO
SUBMITTED BY: S. TOMOKIYO
SIZE: ANSI D

U.S. ARMY CORPS OF ENGINEERS
HONOLULU DISTRICT
FORT SHAFTER, OAHU, HAWAII

INSYNERGY ENGINEERING
1001 BISHOP STREET, SUITE 2500
HONOLULU, HI 96813

JOINT BASE PEARL HARBOR-HICKAM, OAHU, HAWAII
FY22 HAWAII AIR NATIONAL GUARD (HIANG) F-22 PLUS-UP
ADD EGRESS SHOP
PROJECT NO.: KWND290087

TELECOMMUNICATIONS - EXIST B3428
EAST ELEVATION AND DETAIL PLAN

SHEET ID
TS506

REVISED FINAL SUBMITTAL

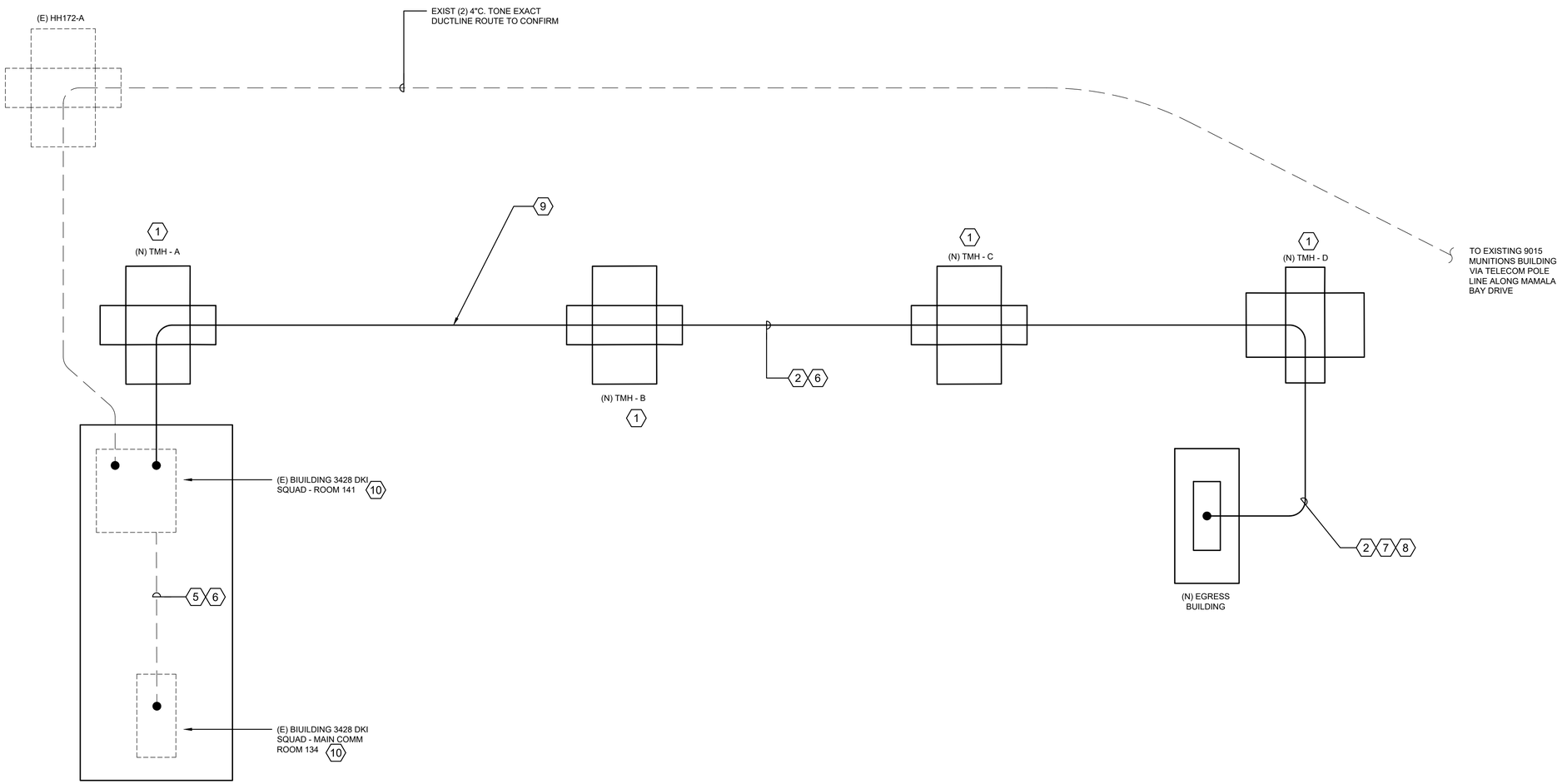

A1 TELECOMMUNICATIONS SITE DIAGRAM - EGRESS BUILDING

SCALE: NTS

GENERAL NOTES

1. EXISTING CABLES AND QUANTITIES ARE BASED OFF OF EXISTING RECORD DRAWINGS, CONTRACTOR SHALL PERFORM SITE INVESTIGATIONS TO VERIFY EXISTING CONDITIONS AND TRACE CABLES ROUTES TO EACH EXISTING FACILITY.

#

1. NEW 12' X 7' TMH, TRAFFIC RATED.
2. NEW (2) 4" PVC OSP CONDUITS.
3. NOT USED.
4. NOT USED.
5. EXIST (2) 4" CONDUIT RUN INSIDE BUILDING 3428 BETWEEN COMM ROOMS. REVIEW EXISTING INDOOR PATHWAYS, PULL-POINTS, AND PULL-STRINGS TO UTILIZE AND RUN THE NEW CABLE INSIDE THE BUILDING. THIS SAME CABLE SHALL ALSO RUN TO OUTDOOR PATHWAYS FURTHER TO NEW EGRESS FACILITY. COORDINATE WITH BUILDING 3428 DKI STAKEHOLDERS.
6. PROVIDE NEW (3) 24-STRAND SINGLE MODE, INDOOR / OUTDOOR RATED FIBER OPTIC BACKBONE CABLE TO NEW EGRESS BUILDING.
7. NOT USED.
8. NOT USED.
9. CAREFULLY CONSTRUCT THE NEW (2) 4"C WITHOUT DISRUPTING THE NEARBY EXISTING (2) 4"C CONTAINING ACTIVE SERVICE CABLES FEEDING EXISTING HIANG CAMPUS OF BUILDINGS.
10. AT BUILDING 3428 DKI COMM ROOM'S EXISTING TELECOM RACK. PROVIDE RACK MOUNTED, FIBER OPTIC TERMINATION EQUIPMENT. PROVIDE PATCH PANELS, MATCHING CONNECTOR TYPES, AND ALL ASSOCIATED CABLE MANAGEMENT HARDWARE. PROVIDE ALL TERMINATION EQUIPMENT TO ALLOW FOR 25% FUTURE SPARE CAPACITY.

US Army Corps of Engineers®

MARK	DESCRIPTION	DATE

ISSUE DATE: 15 OCTOBER 2025
SOLICITATION NO.: W9128A22F0002
CONTRACT NO.: W9128A19D0012
DESIGNED BY: P. TAGAL
DRAWN BY: P. TAGAL
CHECKED BY: S. TOMOKIYO
SUBMITTED BY:
SIZE: ANSI D

U.S. ARMY CORPS OF ENGINEERS
HONOLULU DISTRICT
FORT SHAFTER, OAHU, HAWAII

INSYNERGY ENGINEERING
1001 BISHOP STREET, SUITE 2500
HONOLULU, HI 96813

JOINT BASE PEARL HARBOR-HICKAM, OAHU, HAWAII
FY22 HAWAII AIR NATIONAL GUARD (HIANG) F-22 PLUS-UP
ADD EGRESS SHOP
PROJECT NO.: KAWI220607

TELECOM GROUNDING DIAGRAM

SHEET ID
TS-601

REVISED FINAL SUBMITTAL

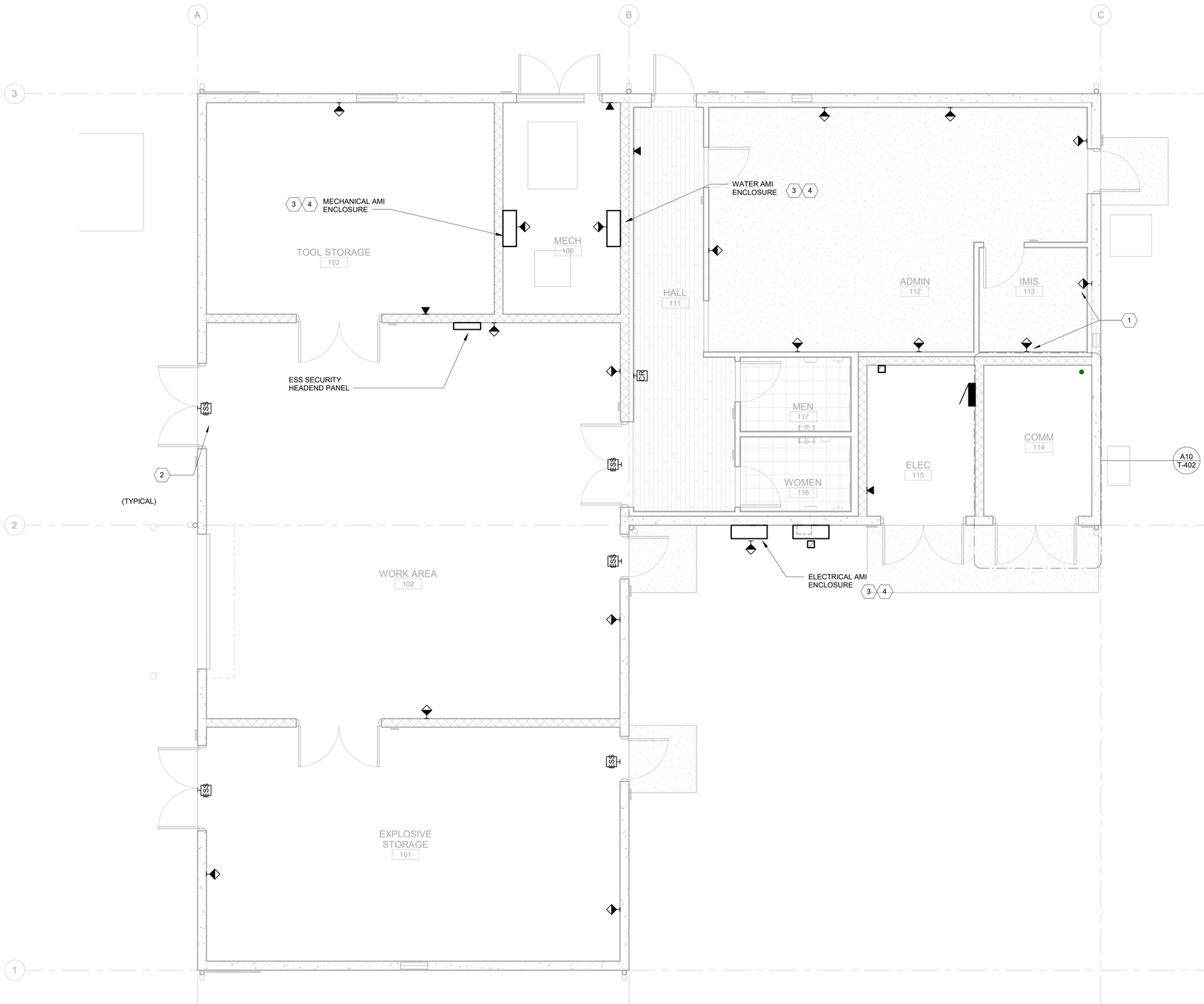

PLAN NORTH

0 2' 4' 8'

A3 TELECOMMUNICATIONS AND SECURITY PLAN

SCALE: 1/4" = 1'-0"

GENERAL SHEET NOTES

KEYNOTES

1. IMS NETWORK OUTLET. PROVIDE HOMERUN TO AFNET SWITCHES (GFGI) AT TELECOM CABINET.
2. SECURITY SYSTEM FOR WORK ROOM AND EXPLOSIVE STORGE ROOM. SEE SECURITY DETAIL AND DIAGRAM SHEETS.
3. NEMA 4X, WALL MOUNTED, +48"AFF. SEE AMI DETAIL SHEETS.
4. AMI ENCLOSURE WITH 1-PORT AMI DATA OUTLET.

US Army Corps of Engineers ®

MARK	DESCRIPTION	DATE

ISSUE DATE: 15 OCTOBER 2025
SOLICITATION NO.: W912BA22F0002
CONTRACT NO.: W912BA15B0012

DESIGNED BY: P. TAGAL
DRAWN BY: P. TAGAL
CHECKED BY: S. TOMOKIYO
SUBMITTED BY: ISE
SIZE: ANSI D

US ARMY CORPS OF ENGINEERS
HONOLULU DISTRICT
FORT SHAFTER, OAHU, HAWAII

INSYNERGY ENGINEERING
1001 BISHOP STREET, SUITE 2500
HONOLULU, HI 96813

JOINT BASE PEARL HARBOR-HICKAM, OAHU, HAWAII
FY22 HAWAII AIR NATIONAL GUARD (HANG) F-22 PLUS-UP
ADD EGRESS SHOP
PROJECT NO.: KMND209087

TELECOMMUNICATIONS AND SECURITY PLAN

SHEET ID

T-101

REVISED FINAL SUBMITTAL

GENERAL NOTES

1. COORDINATE WITH GOVERNMENT ON ALL CABLING WORK INSTALLATION AND INTEGRATION.

KEYNOTES

1. AT EXISTING TELECOM RACK. PROVIDE RACK MOUNTED, FIBER OPTIC TERMINATION EQUIPMENT. PROVIDE PATCH PANELS, MATCHING CONNECTOR TYPES, AND ALL ASSOCIATED CABLE MANAGEMENT HARDWARE. PROVIDE ALL TERMINATION EQUIPMENT TO ALLOW FOR 25% FUTURE SPARE CAPACITY.

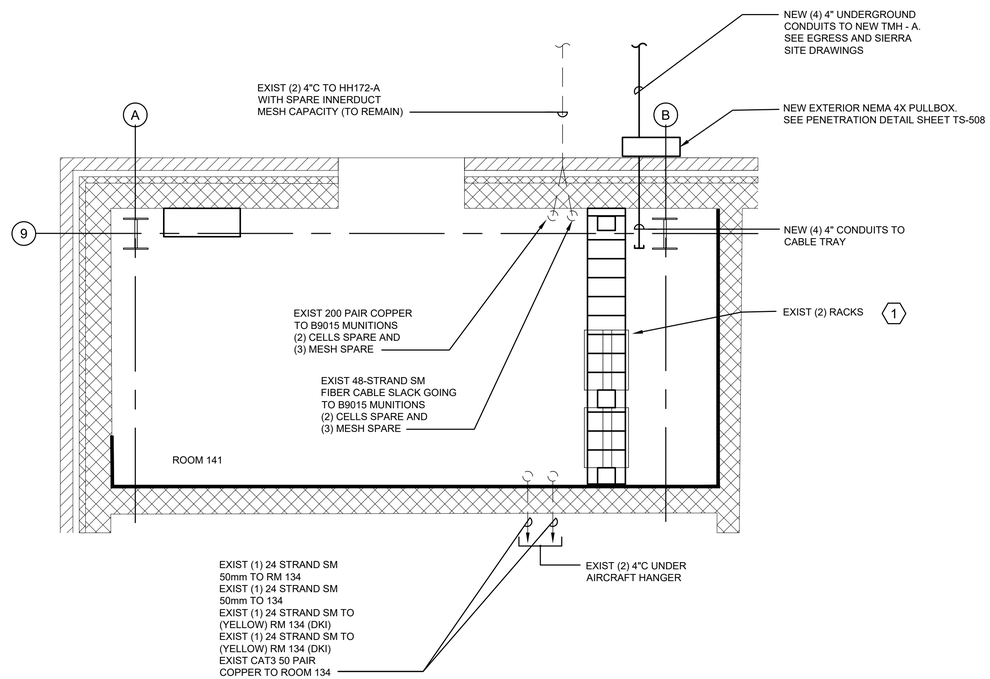

PLAN NORTH

0 1' 2' 4'

A6 ENLARGED TELECOMMUNICATION ROOM - EXISTING BUILDING 3428 TELECOM ROOM 141
SCALE: 1/2" = 1'-0"

US Army Corps of Engineers®

MARK	DESCRIPTION	DATE

ISSUE DATE: 15 OCTOBER 2025
SOLICITATION NO.: W9128A22F0002
CONTRACT NO.: W9128A19D0012

DESIGNED BY: P. TAGAL
DRAWN BY: P. TAGAL
CHECKED BY: S. TOMOKIYO
SUBMITTED BY:
SIZE: ANSI D

U.S. ARMY CORPS OF ENGINEERS
HONOLULU DISTRICT
FORT SHAFTER, OAHU, HAWAII

INSYNERGY ENGINEERING
1001 BISHOP STREET, SUITE 2500
HONOLULU, HI 96813

JOINT BASE PEARL HARBOR-HICKAM, OAHU, HAWAII
FY22 HAWAII AIR NATIONAL GUARD (HIANG) F-22 PLUS-UP
ADD EGRESS SHOP
PROJECT NO.: KMND209007

ENLARGED TELECOMMUNICATION ROOM - EXISTING B3428 TELECOM ROOM 141

SHEET ID
T-401

REVISED FINAL SUBMITTAL

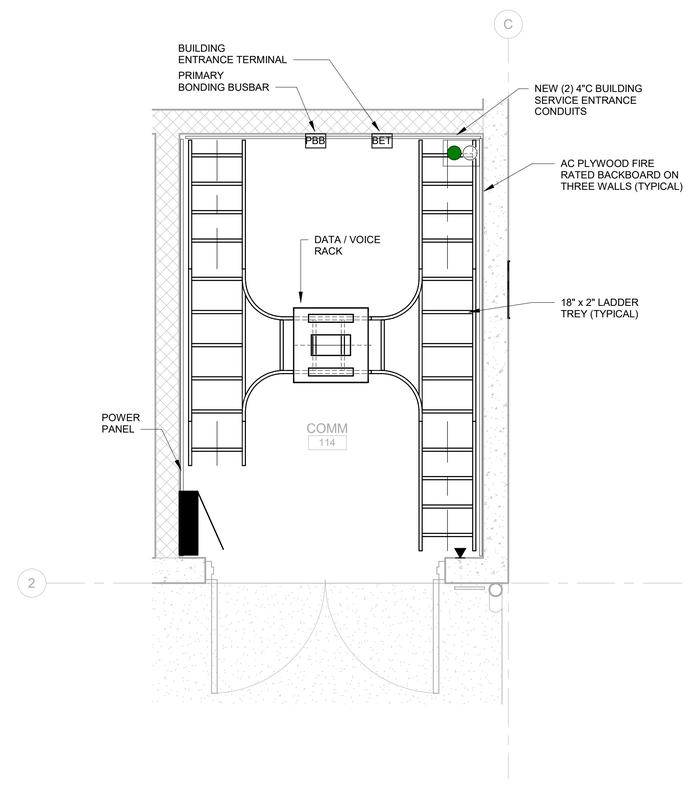

PLAN NORTH

A10 ENLARGED TELECOMMUNICATION ROOMS - EGRESS BUILDING

SCALE: 1/2" = 1'-0"

0 1' 2' 4'

GENERAL SHEET NOTES

KEYNOTES

US Army Corps of Engineers ®

MARK	DESCRIPTION	DATE

ISSUE DATE: 15 OCTOBER 2025
SOLICITATION NO.: W912BA22F0002
CONTRACT NO.: W912BA15D0012

DESIGNED BY: P. TAGAL
DRAWN BY: P. TAGAL
REVIEWED BY: S. TOMOKIYO
SUBMITTED BY: ISE
SIZE: ANSI D

US ARMY CORPS OF ENGINEERS
HONOLULU DISTRICT
FORT SHAFTER, OAHU, HAWAII

INSYNERGY ENGINEERING
1001 BISHOP STREET, SUITE 2500
HONOLULU, HI 96813

JOINT BASE PEARL HARBOR-HICKAM, OAHU, HAWAII
FY22 HAWAII AIR NATIONAL GUARD (HIANG) F-22 PLUS-UP
ADD EGRESS SHOP
PROJECT NO.: KMND209087

ENLARGED TELECOMMUNICATION ROOMS - EGRESS BUILDING

SHEET ID

T-402

REVISED FINAL SUBMITTAL

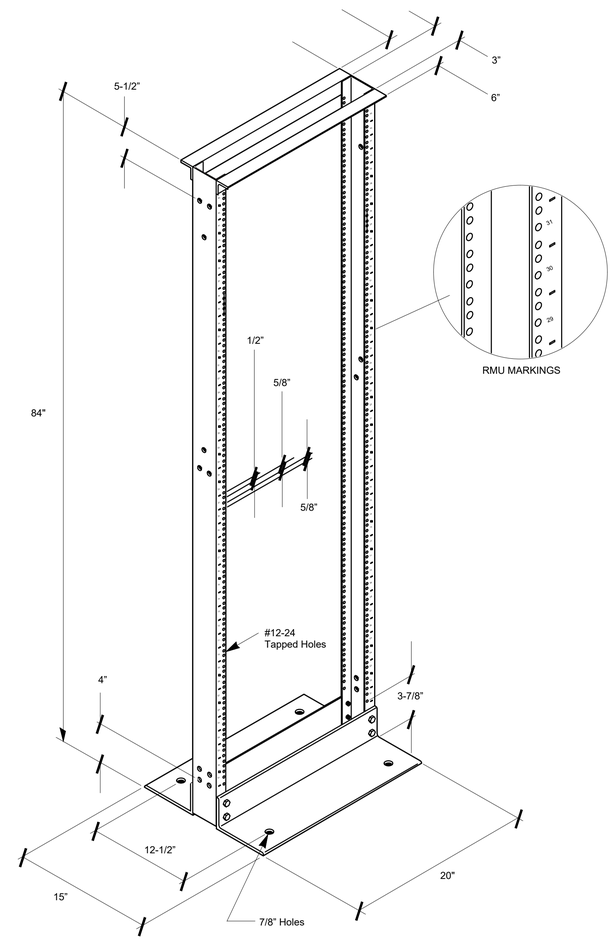

A10 TELECOMMUNICATION RACK DETAIL (FREE - STANDING)

SCALE: NTS

GENERAL NOTES

1. PROVIDE TWO POST, HEAVY DUTY RACK. FIXED IN PLACE, WITH UL, AND EIA - 310 - D COMPLIANT.
2. PROVIDE TO SUPPORT 19 INCH WIDE RACK MOUNTING.
3. PROVIDE TO SUPPORT STATIC LOAD CAPACITY OF 1000 POUNDS.
4. PROVIDE FOR 45 RACK MOUNT UNITS, AND 84" HIGH.
5. PROVIDE PRE-MARKED AND NUMBERED RACK-MOUNT SPACES.
6. PROVIDE INTEGRATED BONDING WITH BUILT -IN ATTACHMENT POINT FOR BONDING CONNECTION.

KEYNOTES

US Army Corps of Engineers®

MARK	DESCRIPTION	DATE

ISSUE DATE: 15 OCTOBER 2025
SOLICITATION NO.: W9128A22F0002
CONTRACT NO.: W9128A19D0012

DESIGNED BY: P. TAGAL
DRAWN BY: P. TAGAL
CHECKED BY: S. TOMOKIYO
SUBMITTED BY:
SIZE: ANSI D

U.S. ARMY CORPS OF ENGINEERS
HONOLULU DISTRICT
FORT SHAFTER, OAHU, HAWAII

INSYNERGY ENGINEERING
1001 BISHOP STREET, SUITE 2500
HONOLULU, HI 96813

JOINT BASE PEARL HARBOR-HICKAM, OAHU, HAWAII
FY22 HAWAII AIR NATIONAL GUARD (HIANG) F-22 PLUS-UP
ADD EGRESS SHOP
PROJECT NO.: KMND209067

TELECOMMUNICATIONS DETAILS

SHEET ID
T-501

REVISED FINAL SUBMITTAL

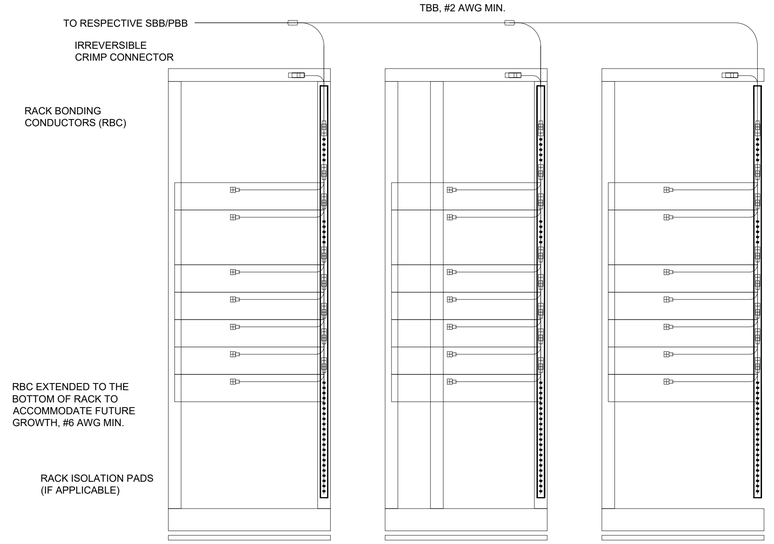

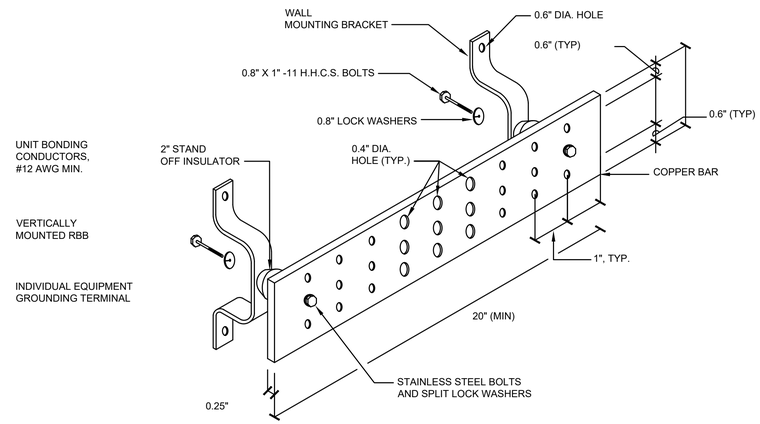

GROUNDING BUSBAR (PBB/SBB)

1 2 3 4 5 6 7

J1 TYPICAL LAN CABINET GROUNDING SCHEMATIC

SCALE: NTS

1 2 3 4

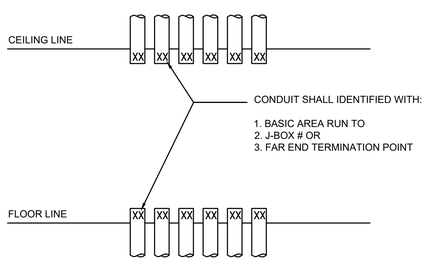

A1 TYPICAL CONDUIT END LABELING

SCALE: NTS

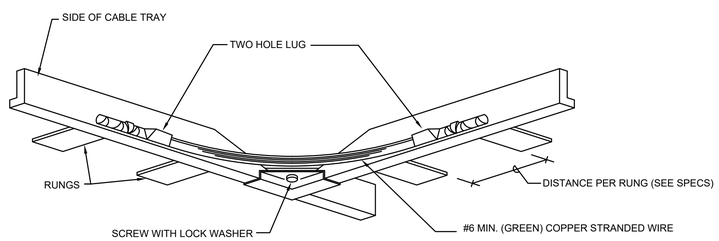

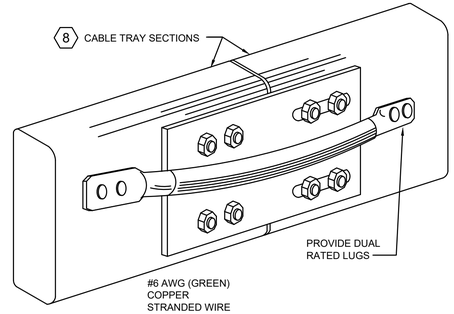

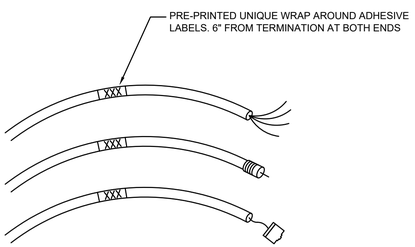

A1 TYPICAL CABLE LABELING

SCALE: NTS

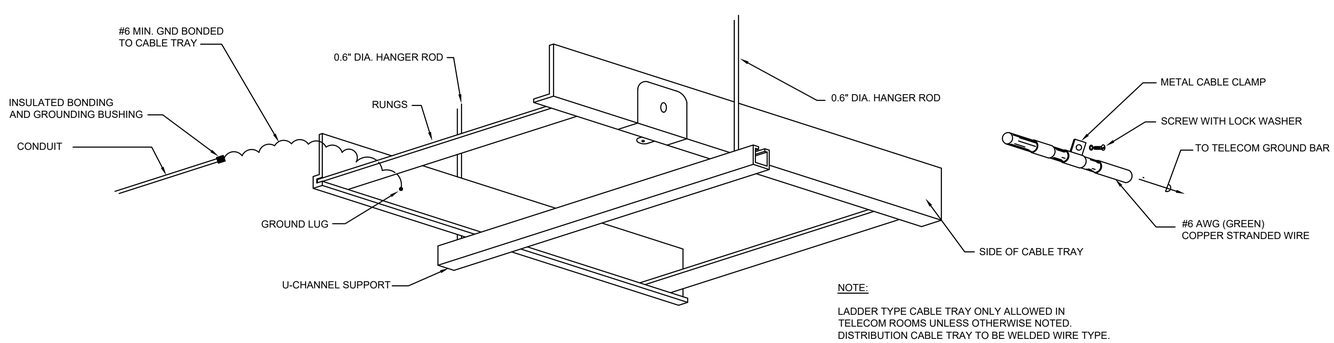

NOTE:

LADDER TYPE CABLE TRAY ONLY ALLOWED IN
TELECOM ROOMS UNLESS OTHERWISE NOTED.
DISTRIBUTION CABLE TRAY TO BE WELDED WIRE TYPE.

A6 TELECOMMUNICATION ROOM LADDER RACK/CABLE TRAY GROUNDING AND BONDING DETAILS

SCALE: NTS

1 2 3 4 8

GENERAL NOTES

KEYNOTES

1. TELECOMMUNICATIONS BONDING CONDUCTORS SHOULD BE INSTALLED WITHOUT SPLICES, WHERE POSSIBLE, IF SPLICES ARE REQUIRED, THEY SHALL BE ACCESSIBLE AND LOCATED WITHIN TELECOMMUNICATION SPACES. JOINED SEGMENTS OF BONDING CONDUCTORS SHALL BE CONNECTED USING IRREVERSIBLE COMPRESSION-TYPE CONNECTORS OR EXOTHERMIC WELDING.
2. TELECOMMUNICATIONS GROUNDING SYSTEM SHALL BE INSTALLED IN ACCORDANCE WITH TIA-607-C.
3. ALL BONDING CONDUCTORS SHALL BE ROUTED IN 1" CONDUIT MINIMUM.
4. ALL TELECOMMUNICATION CABINETS AND HORIZONTAL DISTRIBUTION SUPPORTING STRUCTURES (CABLE TRAYS, LADDERS, CONDUITS, AND BASKETS) SHALL BE BONDED TO THE TELECOM ROOM (PBB/SBB) BAR AS DEFINED IN TIA-569-B AND NECA/BICSI 568.
5. PBB IS 4" WIDE AND 0.25" THICK AND VARIABLE LENGTH.
6. SBB IS 2" THICK AND VARIABLE LENGTH.
7. 0.4" DIAMETER HOLES NEAR BUS BAR CENTER.
8. PROVIDE CABLE TRAY GROUNDING JUMPERS ON ONE SIDE OF CABLE TRAY ONLY BETWEEN CABLE TRAY SECTIONS.

US Army Corps of Engineers®

MARK	DESCRIPTION	DATE

ISSUE DATE: 15 OCTOBER 2025
SOLICITATION NO.: W9128A22F0002
CONTRACT NO.: W9128A19D0012

DESIGNED BY: P. TAGAL
DRAWN BY: P. TAGAL
CHECKED BY: S. TOMOKIYO
SUBMITTED BY:
SIZE: ANSI D

U.S. ARMY CORPS OF ENGINEERS
HONOLULU DISTRICT
FORT SHAFTER, OAHU, HAWAII

INSYNERGY ENGINEERING
1001 BISHOP STREET, SUITE 2500
HONOLULU, HI 96813

JOINT BASE PEARL HARBOR-HICKAM, OAHU, HAWAII
FY22 HAWAII AIR NATIONAL GUARD (HIANG) F-22 PLUS-UP
ADD EGRESS SHOP
PROJECT NO.: KMND209007

TELECOMMUNICATIONS DETAILS

SHEET ID
T-502

REVISED FINAL SUBMITTAL

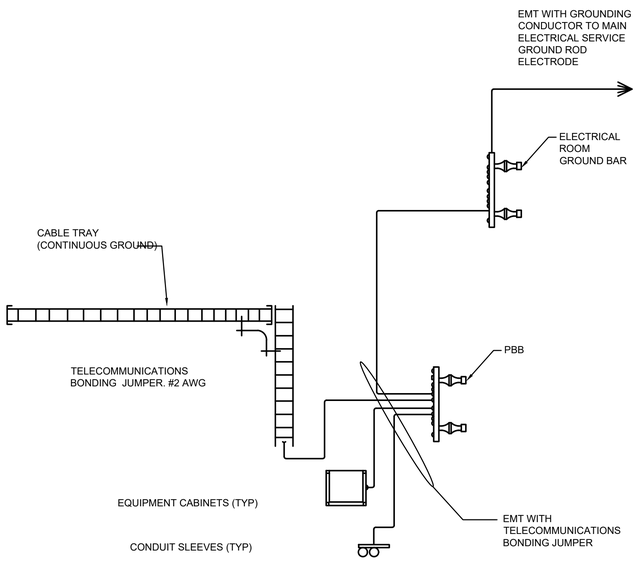

H1 TELECOM SYSTEM BONDING & GROUNDING

SCALE: NTS

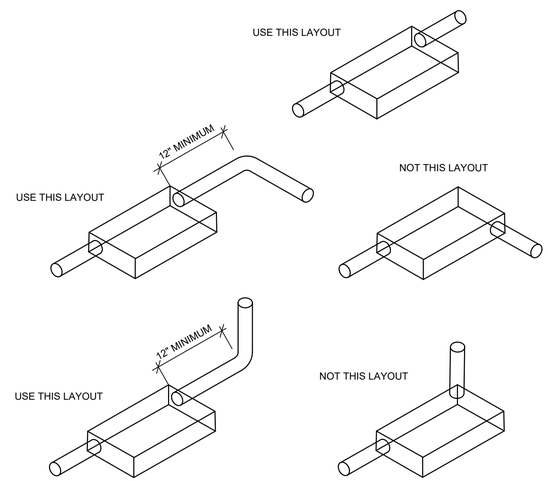

H7 TYPICAL PULL BOX DETAIL

SCALE: NTS

1 2 3 4 5

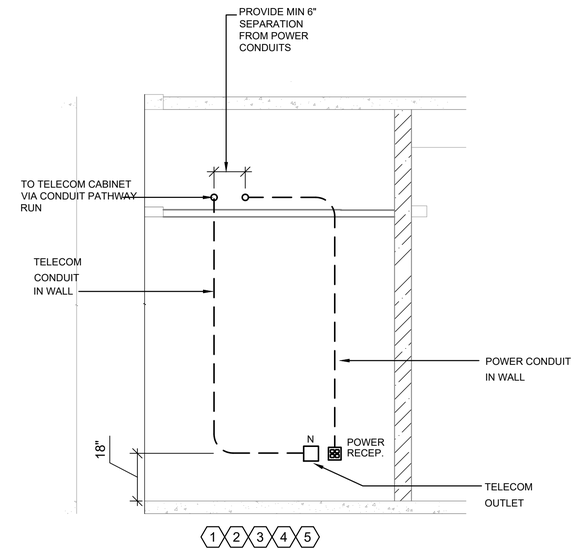

1 2 3 4 5

H12 TYPICAL TELECOM OUTLET DETAIL

SCALE: NTS

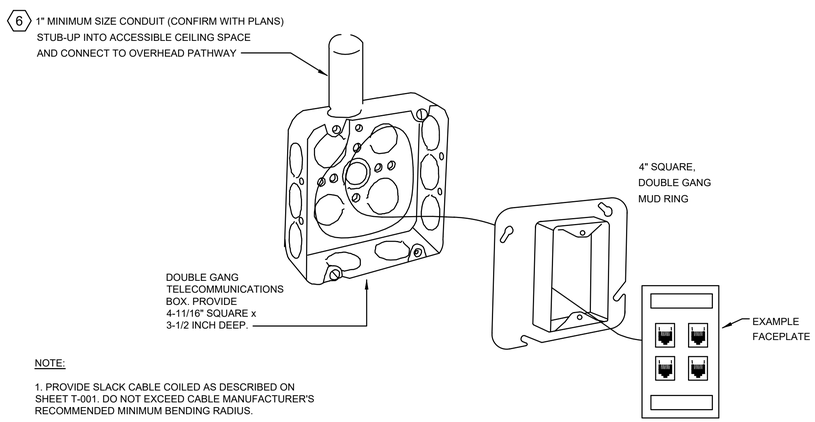

NOTE:

1. PROVIDE SLACK CABLE COILED AS DESCRIBED ON SHEET T-001. DO NOT EXCEED CABLE MANUFACTURER'S RECOMMENDED MINIMUM BENDING RADIUS.

A1 TYPICAL WALL MOUNTED COMMUNICATIONS OUTLET BOX DETAIL

SCALE: NTS

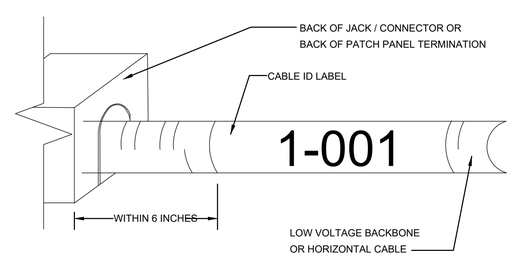

NOTE:

1. PROVISION FOR FURNISHING AND INSTALLING PERMANENT, TYPE WRITTEN SELF LAMINATING CABLE WRAPS.
2. TEXT MUST BE ALL CAPS WITH A MINIMUM HEIGHT OF 1/8 INCH. BACK TEXT ON A WHITE BACKGROUND.

A9 CABLE LABEL AT TERMINATION DETAIL

SCALE: NTS

GENERAL NOTES

KEYNOTES

1. CONFIRM ELEVATION LOCATION WITH PLANS.
2. CONFIRM OUTLET LOCATION WITH FURNITURE.
3. PROVIDE A PULL BOX IN STRAIGHT RUNS OF CONDUIT WHERE THERE ARE MORE THAN (2) 90 - DEGREE BENDS IN A RUN FROM OUTLET TO CABLE TRAY. PROVIDE A PULLBOX EVERY 100 FEET OF CONDUIT RUN LENGTH. DO NOT PROVIDE A PULLBOX IN LIEU OF A BEND.
4. FOR 1.25" CONDUIT RUNS FROM OUTLET TO TELECOM ROOM, PROVIDE PULL BOXES SIZED A DIMENSION OF 16" x 6" x 3.5" DEEP
5. CONFIRM WITH ALL OTHER UTILITIES TO ACCOMMODATE PATHWAY RUN LAYOUT DETAIL IN THE FIELD. PROVISION ALL PATHWAYS RUNS (WALL, CEILING, FLOOR, ETC..) TO ACCOMMODATE PATHWAY RUN LAYOUT DETAIL.

US Army Corps of Engineers®

MARK	DESCRIPTION	DATE

ISSUE DATE: 15 OCTOBER 2025
SOLICITATION NO.: W9128A22F0002
CONTRACT NO.: W9128A19D0012

DESIGNED BY: P. TAGAL
DRAWN BY: P. TAGAL
CHECKED BY: S. TOMOKIYO
SUBMITTED BY: S. TOMOKIYO
SIZE: ANSI D

U.S. ARMY CORPS OF ENGINEERS
HONOLULU DISTRICT
FORT SHAFTER, OAHU, HAWAII

INSYNERGY ENGINEERING
1001 BISHOP STREET, SUITE 2500
HONOLULU, HI 96813

JOINT BASE PEARL HARBOR-HICKAM, OAHU, HAWAII
FY22 HAWAII AIR NATIONAL GUARD (HIANG) F-22 PLUS-UP
ADD EGRESS SHOP
PROJECT NO.: KWND209087

TELECOMMUNICATIONS DETAILS

SHEET ID
T-503

REVISED FINAL SUBMITTAL

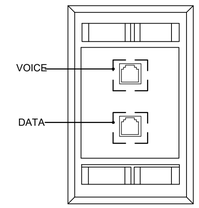

UNCLASSIFIED - NIPR

(2) - 8P8C JACKS, CAT6 (UTP), T568A

(1) BLUE VOICE
(1) GREEN DATA

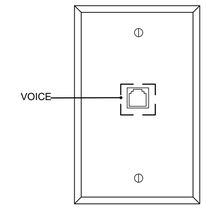

UNCLASSIFIED - NIPR

(1) - 8P8C JACKS, CAT6 (UTP), T568A

(1) BLUE VOICE

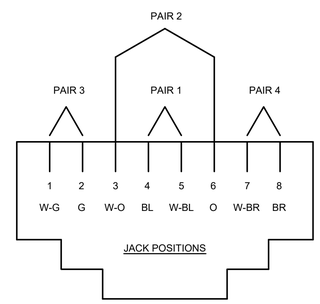

PIN/PAIR ASSIGNMENTS (T568A)

SHEET NOTES:

1. PROVIDE WHITE CONDUCTOR INSULATION WITH COLORED MARKING FOR IDENTIFICATION. MATE CONDUCTORS OF CABLES WITH TIGHTLY TWISTED PAIRS (ALL LESS THAN 15 PER TWIST) MAY SERVE AS THE MARKING.
2. WHITE MARKING OPTIONAL.
3. PROVIDE INSTALLATION AND LABELING IN ACCORDANCE WITH THE LATEST EDITION OF ANSI/TIA/EIA STANDARDS 568A, DRAWING LABELING SCHEME.

CONDUCTOR IDENTIFICATION	COLOR CODE	ABBREVIATION
PAIR 1	WHITE-BLUE (1) BLUE (2)(3)	(W-BL) (BL)
PAIR 2	WHITE-ORANGE (1) ORANGE (2)(3)	(W-O) (O)
PAIR 3	WHITE-GREEN (1) GREEN (2)(3)	(W-G) (G)
PAIR 4	WHITE-BROWN (1) BROWN (2)(3)	(W-BR) (BR)

COLOR CODE TABLE FOR UTP CABLES (FROM ANSI/TIA/EIA 568A)

A9 EIGHT-POSITION JACK-WIRING REQUIREMENTS
SCALE: NTS

GENERAL NOTES

1. CONFIRM ALL CABLE AND JACK COLORS WITH RESPECTIVE GOVERNMENT AGENCY.
2. PROVIDE PLENUM TYPE CABLES FOR AIR HANDLING SPACES AND RISER TYPE CABLES FOR NON-AIR HANDLING SPACES.
3. PROVIDE (OSP) OUTSIDE PLANT RATED CABLES FOR OUTDOOR SPACES AND UNDERGROUND RUNS GOING TO SITE EQUIPMENT.

(#) KEYNOTES

US Army Corps of Engineers®

MARK	DESCRIPTION	DATE

ISSUE DATE: 15 OCTOBER 2025
SOLICITATION NO.: W9128A22F0002
CONTRACT NO.: W9128A19D0012
DESIGNED BY: P. TAGAL
DRAWN BY: P. TAGAL
CHECKED BY: S. TOMOKIYO
SUBMITTED BY:
SIZE: ANSI D

U.S. ARMY CORPS OF ENGINEERS
HONOLULU DISTRICT
FORT SHAFTER, OAHU, HAWAII

INSYNERGY ENGINEERING
1001 BISHOP STREET, SUITE 2500
HONOLULU, HI 96813

JOINT BASE PEARL HARBOR-HICKAM, OAHU, HAWAII
FY22 HAWAII AIR NATIONAL GUARD (HIANG) F-22 PLUS-UP
ADD EGRESS SHOP
PROJECT NO.: KWND209087

TELECOMMUNICATIONS DETAILS

SHEET ID
T-504

REVISED FINAL SUBMITTAL

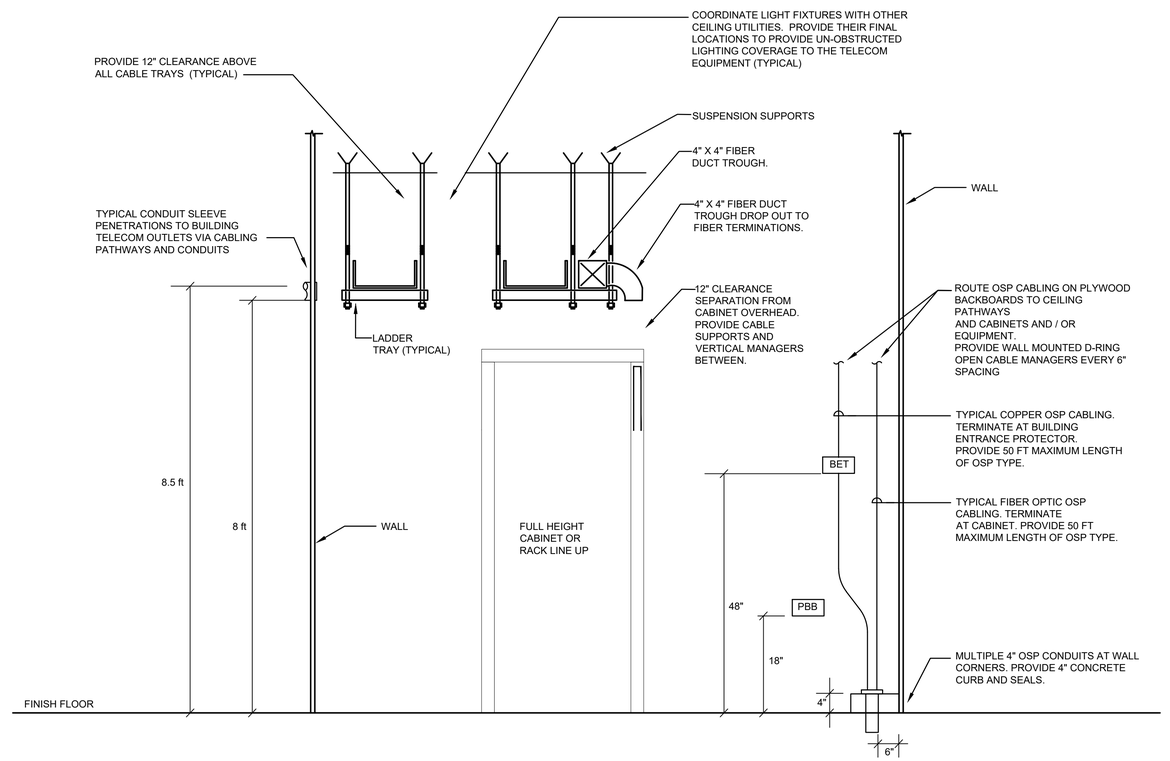

A5 TYPICAL TELECOM ROOM ELEVATION DETAIL
SCALE: NTS

GENERAL NOTES

KEYNOTES

US Army Corps of Engineers®

MARK	DESCRIPTION	DATE

ISSUE DATE: 15 OCTOBER 2025
SOLICITATION NO.: W9128A22F0002
CONTRACT NO.: W9128A19D0012

DESIGNED BY: P. TAGAL
DRAWN BY: P. TAGAL
CHECKED BY: S. TOMOKIYO
SUBMITTED BY:
SIZE: ANSI D

U.S. ARMY CORPS OF ENGINEERS
HONOLULU DISTRICT
FORT SHAFTER, OAHU, HAWAII

INSYNERGY ENGINEERING
1001 BISHOP STREET, SUITE 2500
HONOLULU, HI 96813

JOINT BASE PEARL HARBOR-HICKAM, OAHU, HAWAII
FY22 HAWAII AIR NATIONAL GUARD (HIANG) F-22 PLUS-UP
ADD EGRESS SHOP
PROJECT NO.: KMN209087

TELECOMMUNICATIONS DETAILS

SHEET ID
T-505

REVISED FINAL SUBMITTAL

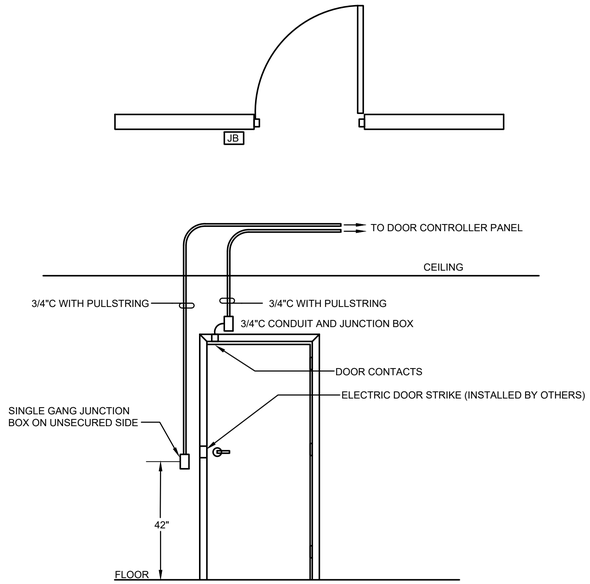

H1 SINGLE DOOR W / CARD READER, ELECTRIFIED LOCKSET - SECURE SIDE (EXIT)

SCALE: NTS

ESS

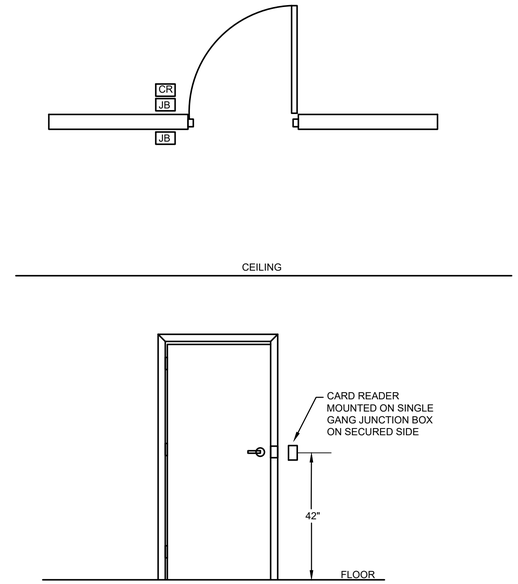

H10 SINGLE DOOR W / CARD READER, ELECTRIFIED LOCKSET - SECURE SIDE (ENTRY)

SCALE: NTS

ESS

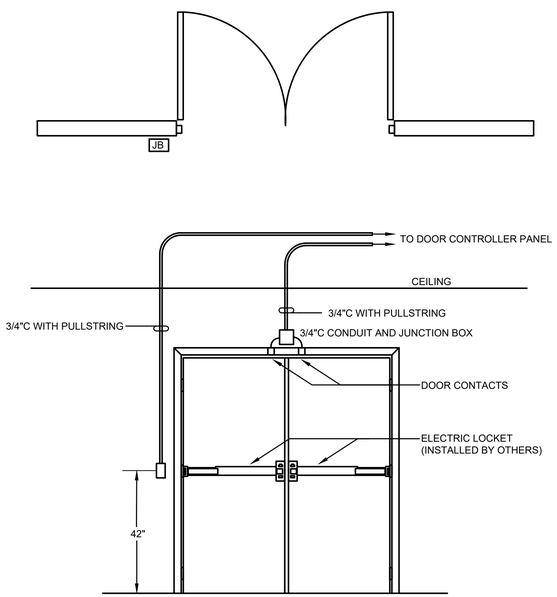

A1 DOUBLE DOOR W / CARD READER, ELECTRIFIED CRASHBARS - SECURE SIDE (EXIT)

SCALE: NTS

ESS

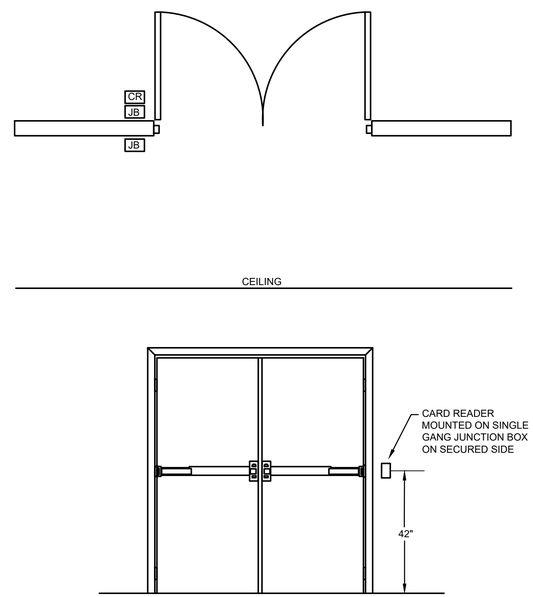

A10 DOUBLE DOOR W / CARD READER, ELECTRIFIED CRASHBARS - SECURE SIDE (ENTRY)

SCALE: NTS

ESS

GENERAL NOTES

1. THERE SHALL NOT BE MORE THAN THE EQUIVALENT OF TWO QUARTER BENDS (182 DEGREES TO TOTAL) BETWEEN FULL POINTS (CONDUIT BODIES AND BOXES) PER TIA-586.
2. ALL SURFACE MOUNT BOXES MUST HAVE NO KNOCKOUTS.

KEYNOTES

US Army Corps of Engineers®

MARK	DESCRIPTION	DATE

ISSUE DATE: 15 OCTOBER 2025
SOLICITATION NO.: W9128A22F0002
CONTRACT NO.: W9128A19D0012

DESIGNED BY: P. TAGAL
DRAWN BY: P. TAGAL
CHECKED BY: S. TOMOKIYO
SUBMITTED BY: S. TOMOKIYO
SIZE: ANSI D

U.S. ARMY CORPS OF ENGINEERS
HONOLULU DISTRICT
FORT SHAFTER, OAHU, HAWAII

INSYNERGY ENGINEERING
1001 BISHOP STREET, SUITE 2500
HONOLULU, HI 96813

JOINT BASE PEARL HARBOR-HICKAM, OAHU, HAWAII
FY22 HAWAII AIR NATIONAL GUARD (HIANG) F-22 PLUS-UP
ADD EGRESS SHOP
PROJECT NO.: KWND209087

TELECOMMUNICATIONS DETAILS

SHEET ID
T-506

REVISED FINAL SUBMITTAL

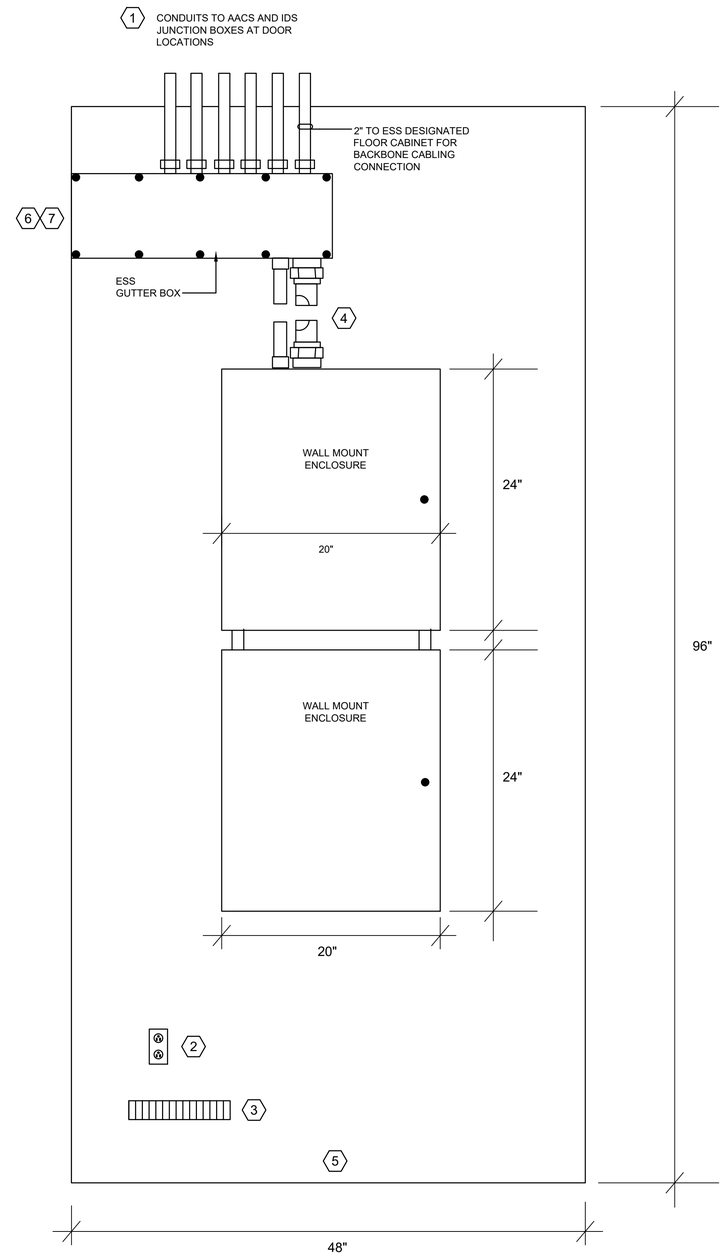

A9 ESS HEADEND WALL ELEVATION DETAIL
SCALE: NTS

GENERAL NOTES

1. PROVIDE CONDUIT SYSTEM WITH PULL-STRING FOR THE SECURITY SYSTEM. EQUIPMENT AND WIRING SHALL BE PROVIDE BY OTHERS.
2. LOCATION OF SECURITY CONDUIT SYSTEM (PULL BOX, JUNCTION BOX, CONDUITS) SHALL BE ACCESSIBLE FOR FUTURE WIRING INSTALLATION AND INSPECTION BY SECURITY OFFICER, IT SHALL NOT BE LOCATED ABOVE HVAC AND ELECTRICAL SYSTEM BEING THE LAST TO BE INSTALLED.

KEYNOTES

1. CONDUITS TO GUTTER BOX ARE DEDICATED STRAIGHT RUNS TO EACH DOOR. THERE SHALL NOT BE MORE THAN THE EQUIVALENT OF TWO QUARTER BENDS (180 DEGREES TOTAL) BETWEEN PULL POINTS (CONDUIT BODIES AND BOXES) PER TIA-569.
2. 120 VAC DUPLEX OUTLET ON DEDICATED CIRCUIT. AND 8 HOUR BATTERY BACKUP.
3. SECONDARY BONDING BUSBAR TIES TO GROUNDING SYSTEM.
4. (2) 2" CONDUITS.
5. PROVISION AC PLYWOOD BACKBOARD.
6. 10" x 10" x 24" GUTTER BOX.
7. PROVIDE ALL GUTTER BOX LOCATIONS AT 12" ABOVE HIGHEST CABLE TRAYS INSIDE OF GTR

ABBREVATION

AACS	AUTOMATED ACCESS CONTROL SYSTEM.
ESS	ELECTRONIC SECURITY SYSTEM.
GFGI	GOVERNMENT FURNISHED GOVERNMENT INSTALLED.
GTR	GOVERNMENT TELECOMMUNICATIONS ROOM.
IDS	INTRUSION DETECTION SYSTEM.
EMT	ELECTRICAL METAL TUBING

US Army Corps of Engineers®

MARK	DESCRIPTION	DATE

ISSUE DATE: 15 OCTOBER 2025
SOLICITATION NO.: W9128A22F0002
CONTRACT NO.: W9128A19D0012

DESIGNED BY: P. TAGAL
DRAWN BY: P. TAGAL
CHECKED BY: S. TOMOKIYO
SUBMITTED BY:
SIZE: ANSI D

U.S. ARMY CORPS OF ENGINEERS
HONOLULU DISTRICT
FORT SHAFTER, OAHU, HAWAII

INSYNERGY ENGINEERING
1001 BISHOP STREET, SUITE 2500
HONOLULU, HI 96813

JOINT BASE PEARL HARBOR-HICKAM, OAHU, HAWAII
FY22 HAWAII AIR NATIONAL GUARD (HIANG) F-22 PLUS-UP
ADD EGRESS SHOP
PROJECT NO.: KWND209087

TELECOMMUNICATIONS DETAILS

SHEET ID
T-507

REVISED FINAL SUBMITTAL

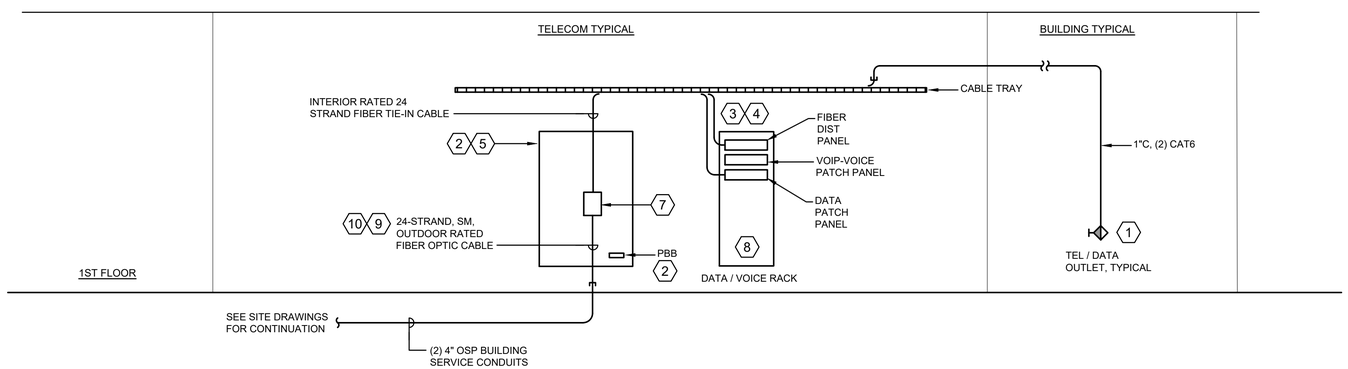

A5 TELECOMMUNICATIONS RISER DIAGRAM - EGRESS BUILDING

SCALE: NTS

GENERAL NOTES

1. SEE TELECOMMUNICATION SITE DRAWINGS FOR ADDITIONAL INFORMATION.
2. SUBMIT FINAL RISER LAYOUT ON SHOP DRAWINGS DESIGNED BY RCDD.

KEYNOTES

1. CABLING AND JACKS SHALL COMPLY WITH THE FOLLOWING
   COLOR CODING:
   DATA - GREEN (CAT6)
   VOICE - BLUE (CAT6)
2. PROVIDE #6 MINIMUM GREEN GROUND WIRE AT BACKBOARD, EQUIPMENT RACKS AND CABINETS. GROUND WIRE SHALL BE BONDED AT THE GROUND BUS AND SUFFICIENT LENGTH TO REACH ANY PART OF THE BACKBOARD, EQUIPMENT RACK OR CABINET
3. PROVIDE 3 FEET CAT6 PATCH CORDS FOR EACH RJ-45 JACK INSTALLED IN BUILDING. PATCH CORDS SHALL BE COLORED PER NOTE 1.
4. FIBER OPTIC BACKBONE CABLING SHALL BE TERMINATED ON FIBER DISTRIBUTION PANELS WITH "LC" TYPE CONNECTORS.
5. PROVIDE 3/4" x 8FT x 4FT, AC, VOID FREE, FIRE RATED, RIGIDLY FIXED. PLYWOOD BACKBOARDS FOR ALL TERMINATION EQUIPMENT SHOWN PER TIA / EIA STANDARDS.
6. NOT USED.
7. FIBER TERMINATION PANEL. WALL MOUNTED. SPLICE ORGANIZER TRAYS. UL-LISTED FOR MINIMUM 144 STRANDS.
8. ACTIVE EQUIPMENT ELECTRONIC. GFGI. RACK MOUNTED. COORDINATE WITH THE GOVERNMENT.
9. TO TELECOM VOICE / DATA HEADED EQUIPMENT. CONFIRM FINAL TERMINATION POINT AT BUILDING 3428 DKI SQUAD OPS 1ST FLOOR MAIN COMM ROOM WITH THE GOVERNMENT.
10. AT BUILDING 3428 DKI COMM ROOM'S EXISTING TELECOM RACK. PROVIDE RACK MOUNTED, FIBER OPTIC TERMINATION EQUIPMENT. PROVIDE PATCH PANELS, MATCHING CONNECTOR TYPES, AND ALL ASSOCIATED CABLE MANAGEMENT HARDWARE. PROVIDE ALL TERMINATION EQUIPMENT TO ALLOW FOR 25% FUTURE SPARE CAPACITY.

US Army Corps of Engineers®

MARK	DESCRIPTION	DATE

ISSUE DATE: 15 OCTOBER 2025
SOLICITATION NO.: W9128A22F0002
CONTRACT NO.: W9128A19D0012
DESIGNED BY: P. TAGAL
DRAWN BY: P. TAGAL
CHECKED BY: S. TOMOKIYO
SUBMITTED BY:
SIZE: ANSI D

U.S. ARMY CORPS OF ENGINEERS
HONOLULU DISTRICT
FORT SHAFTER, OAHU, HAWAII

INSYNERGY ENGINEERING
1001 BISHOP STREET, SUITE 2500
HONOLULU, HI 96813

JOINT BASE PEARL HARBOR-HICKAM, OAHU, HAWAII
FY22 HAWAII AIR NATIONAL GUARD (HIANG) F-22 PLUS-UP
ADD EGRESS SHOP
PROJECT NO.: KWMD209087

TELECOMMUNICATIONS RISER DIAGRAM

SHEET ID
T-601

REVISED FINAL SUBMITTAL

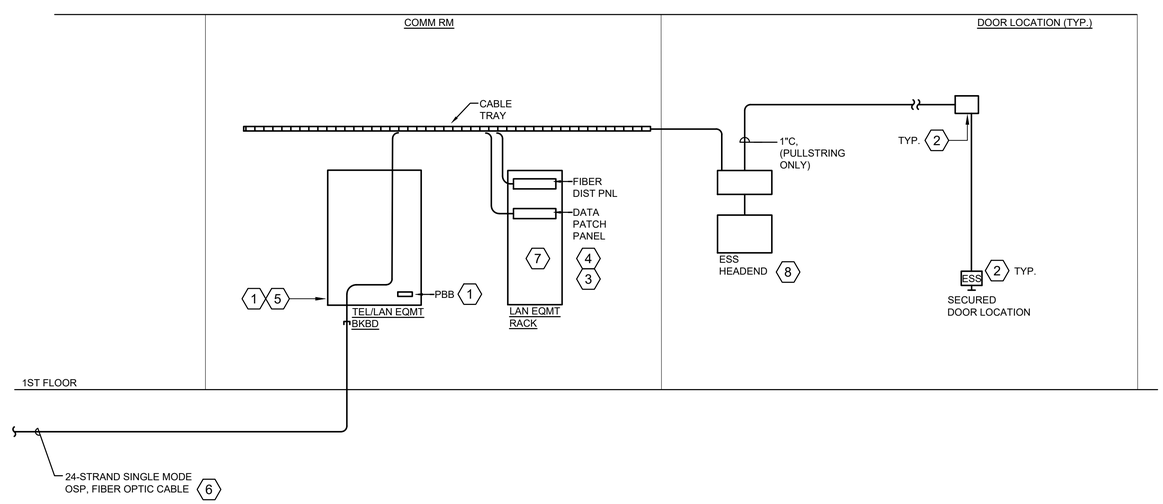

A7 SECURITY RISER DIAGRAM - EGRESS BUILDING

SCALE: NTS

GENERAL NOTES

1. CONFIRM ALL SYSTEM DESIGN WITH FLOOR PLANS, DETAILS, AND THE GOVERNMENT
2. SUBMIT SECURITY SYSTEM SHOP DRAWINGS. COORDINATE WITH THE GOVERNMENT.

KEYNOTES

1. PROVIDE #6 MINIMUM GREEN GROUND WIRE AT ALL BACKBOARD, EQUIPMENT RACK AND CABINETS. GROUND WIRE SHALL BE BONDED AT THE GROUND BUS AND SUFFICIENT LENGTH TO REACH ANY PART OF THE BACKBOARD, EQUIPMENT RACK OR CABINET. SIZE GROUND CONDUCTOR IN ACCORDANCE WITH J-STD-607B, (SEE GROUNDING SCHEMATIC).
2. ABOVE DOOR ESS ENCLOSURE AND DEVICES. SEE SECURITY DETAILS.
3. FIBER OPTIC BACKBONE CABLING SHALL BE TERMINATED ON FIBER DISTRIBUTION PANELS WITH "LC" TYPE CONNECTORS.
4. A MINIMUM OF 36" (MEASURED VERTICALLY) OF VACANT SPACE SHALL BE PROVIDED IN EACH EQUIPMENT RACK FOR GFGI EQUIPMENT.
5. PROVIDE 3/4" X 8FT X 4FT, AC, VOID FREE, FIRE RATED, RIGIDLY FIXED, PLYWOOD BACKBOARDS FOR ALL TERMINATION EQUIPMENT SHOWN PER TIA / EIA STANDARDS.
6. DEDICATED ESS BACKBONE FIBER OPTIC CABLE TO SECURITY HEADEND EQUIPMENT. COORDINATE WITH THE GOVERNMENT.
7. RACK MOUNTED UNIT SPACE IS RESERVED FOR GFGI ACTIVE EQUIPMENT.
8. GOVERNMENT FURNISHED AND INSTALLED ESS HEADEND GUTTER AND ENCLOSURE, WALL MOUNTED. PROVISION INSTALLATION AND INTEGRATION OF SYSTEM WITH SECURITY HEADEND EQUIPMENT. COORDINATE WITH THE GOVERNMENT.

US Army Corps of Engineers®

MARK	DESCRIPTION	DATE

ISSUE DATE: 15 OCTOBER 2025
SOLICITATION NO.: W9128A22F0002
CONTRACT NO.: W9128A19D0012

DESIGNED BY: P. TAGAL
DRAWN BY: P. TAGAL
CHECKED BY: S. TOMOKIYO
SUBMITTED BY:
SIZE: ANSI D

U.S. ARMY CORPS OF ENGINEERS
HONOLULU DISTRICT
FORT SHAFTER, OAHU, HAWAII

INSYNERGY ENGINEERING
1001 BISHOP STREET, SUITE 2500
HONOLULU, HI 96813

JOINT BASE PEARL HARBOR-HICKAM, OAHU, HAWAII
FY22 HAWAII AIR NATIONAL GUARD (HIANG) F-22 PLUS-UP
ADD EGRESS SHOP
PROJECT NO.: KWND209087

SECURITY RISER DIAGRAM

SHEET ID
T-602

REVISED FINAL SUBMITTAL

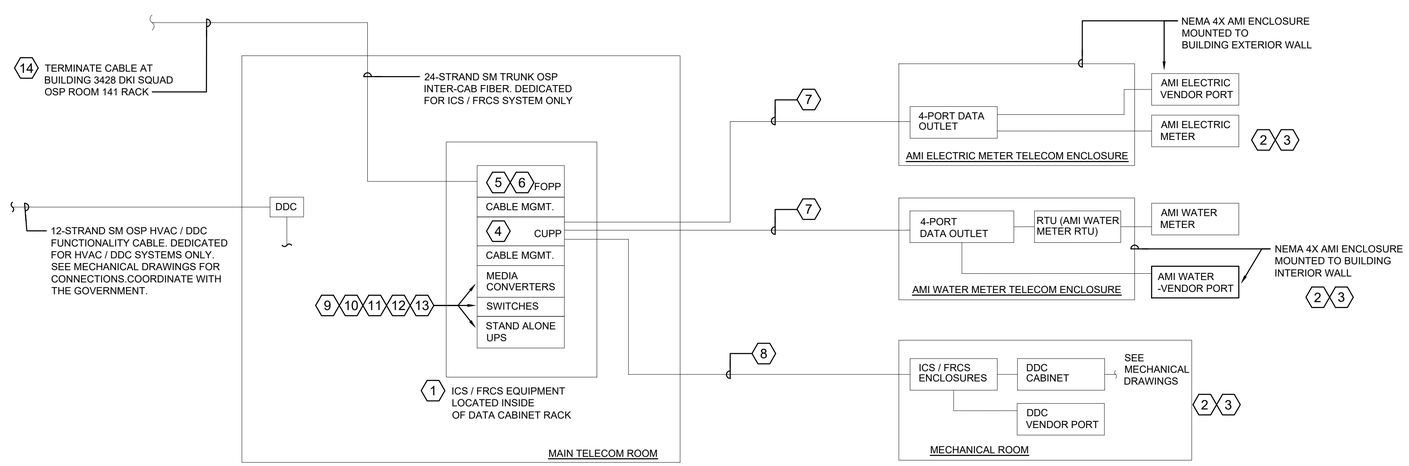

A5 ICS / FRCS SINGLE LINE DIAGRAM - EGRESS

SCALE: NTS

GENERAL NOTES

KEYNOTES

1. RACK CONTAINS OTHER SYSTEMS: (NIPR, VOICE, ESS). COORDINATE WITH OTHERS.
2. COORDINATE ICS / FRCS TELECOM ENCLOSURE INSTALLATION AND INTEGRATION DETAILS WITH OTHERS. SEE ENCLOSURE DETAILS ON SHEET TS505.
3. PROVIDE ALL WALL MOUNTED 32" SQUARE ENCLOSURE NEAR SYSTEM ENCLOSURES (ELECTRIC, WATER, AND DDC).
4. 24-PORT COPPER CAT 6 PATCH PANEL.
5. FIBER OPTIC TERMINATION HARDWARE WITH SLACK MANAGEMENT.
6. 24-PORT FIBER SM DUPLEX LC / UTP PORTS.
7. 1.25" CONDUIT WITH (4) CATEGORY 6 INDOOR / OUTDOOR / SUNLIGHT RESISTANT RATED CABLES.
8. 1.5" CONDUIT WITH (12) CATEGORY 6 INDOOR PLENUM RATED CABLES.
9. PROVIDE MEDIA CONVERTER UNIT TYPES. QUANTITIES AND ACCESSORIES TO SUPPORT CABLING SHOWN ON PLANS.
10. MEDA CONVERTERS: PERLE S-10GRT-SFP, TAA COMPLIANT, OR APPROVED EQUAL.
11. AMI NETWORK SWITCH: CISCO C9300-48T-E, MODULAR UPLINKS, 1100W AC, WITH PWR-C1-350WAC-P SECONDARY POWER SUPPLY, OR APPROVED EQUAL.
12. DDC NETWORK SWITCH: CISCO C9300-48T-E, MODULAR UPLINKS, 1100W AC, WITH PWR-C1-350WAC-P SECONDARY POWER SUPPLY, OR APPROVED EQUAL.
13. UPS: APC SMART-UPS ON LINE, 2200VA, C9300-48T-E AND A MINIMUM 30-MINUTES RUN TIME, OR APPROVED EQUAL.
14. AT BUILDING 3428 DKI COMM ROOM'S EXISTING TELECOM RACK. PROVIDE RACK MOUNTED, FIBER OPTIC TERMINATION EQUIPMENT. PROVIDE PATCH PANELS, MATCHING CONNECTOR TYPES, AND ALL ASSOCIATED CABLE MANAGEMENT HARDWARE. PROVIDE ALL TERMINATION EQUIPMENT TO ALLOW FOR 25% FUTURE SPARE CAPACITY.

US Army Corps of Engineers®

MARK	DESCRIPTION	DATE

ISSUE DATE: 15 OCTOBER 2025
SOLICITATION NO.: W9128A22F0002
CONTRACT NO.: W9128A19D0012

DESIGNED BY: P. TAGAL
DRAWN BY: P. TAGAL
CHECKED BY: S. TOMOKIYO
SUBMITTED BY:
SIZE: ANSI D

U.S. ARMY CORPS OF ENGINEERS
HONOLULU DISTRICT
FORT SHAFTER, OAHU, HAWAII

INSYNERGY ENGINEERING
1001 BISHOP STREET, SUITE 2500
HONOLULU, HI 96813

JOINT BASE PEARL HARBOR-HICKAM, OAHU, HAWAII
FY22 HAWAII AIR NATIONAL GUARD (HIANG) F-22 PLUS-UP
ADD EGRESS SHOP
PROJECT NO.: KWND209087

TELECOMMUNICATIONS DETAILS

SHEET ID
T-603

REVISED FINAL SUBMITTAL

SIZING OF TBB		
TBB LENGTH IN LINEAR METERS (FEET)	TBB SIZE (AWG)	TBB SIZE (sqmm)
LESS THAN 4 (13)	6	14
4-6 (14-20)	4	22
6-8 (21-26)	3	38
8-10 (27-33)	2	38
10-13 (34-41)	1	38
13-16 (42-52)	1/0	60
16-20 (53-66)	2/0	60
20-26 (67-84)	3/0	100
26-32 (85-105)	4/0	100
32-38 (106-125)	250kcmil	100
38-46 (126-150)	300kcmil	150
46-53 (151-175)	350kcmil	150
53-76 (176-250)	500kcmil	200
76-91 (251-300)	600kcmil	325
GREATER THAN 91 (301)	750kcmil	325

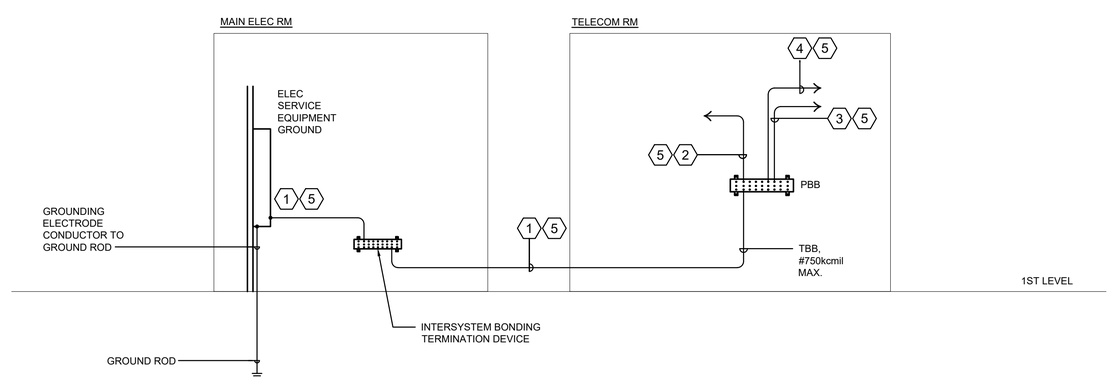

A7 GROUNDING RISER DIAGRAM - EGRESS BUILDING
SCALE: NTS

GENERAL NOTES

1. BOND ALL RACKS, PATHWAYS, AND EQUIPMENT TO GROUND PER NEC.
2. EACH TELECOMMUNICATIONS GROUNDING AND BONDING CONDUCTOR SHALL BE LABELED. LABELS SHALL BE LOCATED ON CONDUCTORS AS CLOSE AS PRACTICABLE TO THEIR POINT OF TERMINATION IN A READABLE POSITION. LABELS SHALL BE NONMETALLIC. REFER TO ANSI/TIA/EIA-606-A FOR ADDITIONAL LABELING REQUIREMENTS. SUBMIT LABEL DOCUMENTATION ON RCDD SHOP DRAWINGS.
3. VERIFY GROUNDING CONDUCTOR SIZE WITH TABLE BELOW. ADJUST SIZE BASED ON LENGTH AS REQUIRED.

KEYNOTES

1. BONDING CONDUCTOR TO ELECTRICAL SERVICE ENTRANCE GROUND VIA INTERSYSTEM BONDING TERMINATION DEVICE.
2. BOND TO BUILDING STEEL. INSTALL CONDUCTORS IN THE SHORTEST AND MOST DIRECT PATHS FEASIBLE.
3. BOND CABLES TO EQUIPMENT AND PATHWAYS, 4 AWG MIN.
4. BOND TO TELECOM ROOM PANELBOARD GROUND IN ROOMS WHERE PANELBOARDS ARE INSTALLED.
5. VERIFY GROUNDING CONDUCTOR SIZE WITH TABLE BELOW. ADJUST SIZE BASED ON LENGTH AS REQUIRED.

US Army Corps of Engineers®

MARK	DESCRIPTION	DATE

ISSUE DATE: 15 OCTOBER 2025
SOLICITATION NO.: W9128A22F0002
CONTRACT NO.: W9128A19D0012
DESIGNED BY: P. TAGAL
DRAWN BY: P. TAGAL
CHECKED BY: S. TOMOKIYO
SUBMITTED BY:
SIZE: ANSI D

U.S. ARMY CORPS OF ENGINEERS
HONOLULU DISTRICT
FORT SHAFTER, OAHU, HAWAII

INSYNERGY ENGINEERING
1001 BISHOP STREET, SUITE 2500
HONOLULU, HI 96813

JOINT BASE PEARL HARBOR-HICKAM, OAHU, HAWAII
FY22 HAWAII AIR NATIONAL GUARD (HIANG) F-22 PLUS-UP
ADD EGRESS SHOP
PROJECT NO.: KWND299087

TELECOMMUNICATIONS DETAILS

SHEET ID
T-604

REVISED FINAL SUBMITTAL