June 10, 2026.

COMBINED SYNOPSIS/SOLICITATION

RFQ Number PR15667572

The Bureau of International Narcotics and Law Enforcement (INL) at the U.S. Embassy in Bogota invites you to submit a quotation for the acquisition and installation of a mobile marksmanship / shooting training simulator for firearms.

Place of performance: Cartagena, Colombia.
Contract managed: Local Contracting
Required delivery date: Local Vendor: 40 days (delivery) + 14 days (transfer) + 30 days (installation) = 84 days
Vendor Outside Colombia: 40 days (delivery) + 21 days (shipping/customs) + 14 days (transfer) + 30 days (installation) = 105 days

Quote must be submitted via email no later than July 10, 2026, at 16:00 hours (Bogota, Colombia) time. Refer to SF-1449 Continuation Pages, Section 3 (Solicitation Provisions), Subsection III (Addendum to FAR 12.202), Item 2.0 for complete submission instructions. This solicitation will be competed under full and open competition.

Questions pertaining to this solicitation, if any, must be received by the Government no later than June 19, 2026, at 16:00 hours (Bogota, Colombia).

This is a combined synopsis/solicitation prepared in accordance with the format in FAR Subpart 12.202, as supplemented with additional information included in this notice. This announcement constitutes the only solicitation; quotations are being requested by this notice alone, and a written solicitation will not be issued. The resultant purchase order will be awarded using Simplified Acquisition Procedures in accordance with FAR 12.

The U.S. Government intends to award a purchase order if the responsive quote is technically acceptable and reasonably priced. We intend to award a contract based on initial quote, without holding discussions, although we may hold discussions if it is in the best interest of the Government to do so.

Unless an exception in FAR 4.203-1(b) applies, your company must be registered in the System for Award Management (SAM) (www.SAM.gov) in order to be eligible for award. You may contact Kamila Ariza at Arizak@state.gov; should you have any questions relating to SAM registration.

Sincerely

Mallory Pickett
Contracting Officer, INL Bogota

SOLICITATION/CONTRACT/ORDER FOR COMMERCIAL ITEMS
OFFEROR TO COMPLETE BLOCKS 12, 17, 23, 24, & 30

1. REQUISITION NUMBER: PR15667572

2. CONTRACT NO.

3. AWARD/EFFECTIVE DATE

4. ORDER NUMBER

5. SOLICITATION NUMBER: PR15667572

6. SOLICITATION ISSUE DATE: 06/10/2026

7. FOR SOLICITATION INFORMATION CALL:

a. NAME: Refer to Continuation Pages, Section 3

b. TELEPHONE NUMBER *(No collect calls)*: N/A

8. OFFER DUE DATE/ LOCAL TIME: 07/10/2026 16:00 Hours

9. ISSUED BY — CODE

U.S. Embassy Bogota - INL
Carrera 45 # 24B-27
Bogota, Colombia

10. THIS ACQUISITION IS [X] UNRESTRICTED OR [ ] SET ASIDE: % FOR:

[ ] SMALL BUSINESS
[ ] HUBZONE SMALL BUSINESS
[ ] SERVICE-DISABLED VETERAN-OWNED SMALL BUSINESS
[ ] WOMEN-OWNED SMALL BUSINESS (WOSB) ELIGIBLE UNDER THE WOMEN-OWNED SMALL BUSINESS PROGRAM
[ ] EDWOSB
[ ] 8 (A)

NAICS:

SIZE STANDARD:

11. DELIVERY FOR FOB DESTINATION UNLESS BLOCK IS MARKED
[ ] SEE SCHEDULE

12. DISCOUNT TERMS

[ ] 13a. THIS CONTRACT IS A RATED ORDER UNDER DPAS (15 CFR 700)

13b. RATING

14. METHOD OF SOLICITATION
[X] RFQ [ ] IFB [ ] RFP

15. DELIVER TO — CODE

Cartagena, Colombia

16. ADMINISTERED BY — CODE

Same as Block 9

17a. CONTRACTOR/ OFFEROR — CODE — FACILITY CODE

TELEPHONE NO.

[ ] 17b. CHECK IF REMITTANCE IS DIFFERENT AND PUT SUCH ADDRESS IN OFFER

18a. PAYMENT WILL BE MADE BY — CODE

U.S. Embassy Bogota -FMO
Carrera 45 No. 24B-27
Bogota - Colombia

18b. SUBMIT INVOICES TO ADDRESS SHOWN IN BLOCK 18a UNLESS BLOCK BELOW IS CHECKED [X] SEE ADDENDUM

19. ITEM NO.	20. SCHEDULE OF SUPPLIES/SERVICES	21. QUANTITY	22. UNIT	23. UNIT PRICE	24. AMOUNT
	ALL ITEMS- REFER TO SF1449 CONTINUATION PAGES *(Use Reverse and/or Attach Additional Sheets as Necessary)*				

25. ACCOUNTING AND APPROPRIATION DATA

26. TOTAL AWARD AMOUNT *(For Govt. Use Only)*

[X] 27a. SOLICITATION INCORPORATES BY REFERENCE FAR 52.212-1, 52.212-4. FAR 52.212-3 AND 52.212-5 ARE ATTACHED. ADDENDA [X] ARE [ ] ARE NOT ATTACHED

[ ] 27b. CONTRACT/PURCHASE ORDER INCORPORATES BY REFERENCE FAR 52.212-4. FAR 52.212-5 IS ATTACHED. ADDENDA [ ] ARE [ ] ARE NOT ATTACHED

[ ] 28. CONTRACTOR IS REQUIRED TO SIGN THIS DOCUMENT AND RETURN _____ COPIES TO ISSUING OFFICE. CONTRACTOR AGREES TO FURNISH AND DELIVER ALL ITEMS SET FORTH OR OTHERWISE IDENTIFIED ABOVE AND ON ANY ADDITIONAL SHEETS SUBJECT TO THE TERMS AND CONDITIONS SPECIFIED

[ ] 29. AWARD OF CONTRACT: REF. _____ OFFER DATED _____. YOUR OFFER ON SOLICITATION (BLOCK 5), INCLUDING ANY ADDITIONS OR CHANGES WHICH ARE SET FORTH HEREIN, IS ACCEPTED AS TO ITEMS:

30a. SIGNATURE OF OFFEROR/CONTRACTOR

31a. UNITED STATES OF AMERICA *(SIGNATURE OF CONTRACTING OFFICER)*

30b. NAME AND TITLE OF SIGNER *(Type or print)*

30c. DATE SIGNED

31b. NAME OF CONTRACTING OFFICER *(Type or print)*

31c. DATE SIGNED

19. ITEM NO.	20. SCHEDULE OF SUPPLIES/SERVICES	21. QUANTITY	22. UNIT	23. UNIT PRICE	24. AMOUNT

32a. QUANTITY IN COLUMN 21 HAS BEEN

☐ RECEIVED ☐ INSPECTED ☐ ACCEPTED, AND CONFORMS TO THE CONTRACT, EXCEPT AS NOTED: _____

32b. SIGNATURE OF AUTHORIZED GOVERNMENT REPRESENTATIVE	32c. DATE	32d. PRINTED NAME AND TITLE OF AUTHORIZED GOVERNMENT REPRESENTATIVE

32e. MAILING ADDRESS OF AUTHORIZED GOVERNMENT REPRESENTATIVE	32f. TELPHONE NUMBER OF AUTHORZED GOVERNMENT REPRESENTATIVE
	32g. E-MAIL OF AUTHORIZED GOVERNMENT REPRESENTATIVE

33. SHIP NUMBER	34. VOUCHER NUMBER	35. AMOUNT VERIFIED CORRECT FOR	36. PAYMENT	37. CHECK NUMBER
☐ PARTIAL ☐ FINAL			☐ COMPLETE ☐ PARTIAL ☐ FINAL	

38. S/R ACCOUNT NO.	39. S/R VOUCHER NUMBER	40. PAID BY

41a. I CERTIFY THIS ACCOUNT IS CORRECT AND PROPER FOR PAYMENT		42a. RECEIVED BY *(Print)*	
41b. SIGNATURE AND TITLE OF CERTIFYING OFFICER	41c. DATE	42b. RECEIVED AT *(Location)*	
		42c. DATE REC'D *(YY/MM/DD)*	42d. TOTAL CONTAINERS

PR15667572

TABLE OF CONTENTS

Section 1 - The Schedule

- Standard Form 1449 (SF-1449)
- Continuation To SF-1449, RFQ Number PR15667572

Section 2 - Contract Clauses

Section 3 - Solicitation Provisions

Section 4 – Evaluation Factors

Section 5 – Representations and Certifications

Attachments List
(a) Price Schedule (Attachment A).
(b) Statement of Work (Attachment B) - Vendor

All information from the INL Procurement Unit is confidential and should not be shared with third parties or personnel outside of INL Procurement. Proposals submitted to the American Embassy are exclusive, and any disclosure may result in disqualification from the processes. If anyone outside our team requests information, report it immediately. Transparency and ethics are fundamental to our procurement processes, ensuring equal opportunities for all participants.

SECTION 1 – THE SCHEDULE

Continuation to SF-1449, RFQ Number PR15667572, Schedule, Block 11

1.0 TYPE OF CONTRACT

This is a firm-fixed- price (FFP) purchase order payable entirely in Colombian pesos (COP) for Colombian firms and US dollars (USD) for US firms. The price includes all direct and indirect costs, overhead, general, and administrative expenses, profit, shipping/delivery charges, insurance, assembly, etc. The price will not be subject to adjustment after award. No additional sums will be payable for any escalation in the cost of materials, equipment, or labor, or because of the Contractor's failure to properly estimate or accurately predict the cost or difficulty of completing the contract. The Government will not adjust the contract price due to fluctuations in the cost of contract performance or due to fluctuations in exchange rates.

2.0 PRICES

Refer to Attachment A for a complete list of required products. Offerors must complete the pricing template with proposed unit prices. Request the excel version from Arizak@state.gov.

a. **Price Schedule. (Attachment A).**

Fundamental aspects are requested in the excel version **Price Schedule (Attachment A)** and in the **Statement of Work (Attachment B)**; must be provided by the vendor in the quote.

*** * ***

Please request the excel version
of the Price Schedule (Attachment A) from:
Arizak@state.gov
***

<u>NOTE</u> ON SECURITY PROHIBITIONS AND EXCLUSIONS:
Please, per FAR <u>52.240-91</u> and <u>52.240-90</u>, propose other manufacturers than Chinese or related.

3.0 VALUE ADDED TAX.

Value Added Tax (VAT) or Impuesto a las Ventas (IVA)

The Contractor will not be reimbursed VAT or IVA under this contract by the USG, as described in the tax relief procedures as follows:

TAX RELIEF PROCEDURES

(a) General. This clause supplements FAR 52.229-6, Taxes – Foreign Fixed-Price Contracts (Reference 29.402-1(a)). The prices set forth in this contract are exclusive of all taxes and duties from which the U.S. Government is exempt by virtue of agreement between the U.S. Government and the Government of Colombia.

(b)(1) Procedures. The Contractor shall follow the procedures in paragraph (c) of this clause regarding tax relief as provided in the agreement between the U. S. Government and Colombia. The diplomatic tax privilege belongs to the U.S. Government and applies to taxes and duties payable to Colombia that are directly attributable to contract costs identified in paragraph (c) as subject to exemption, e.g., taxes or duties levied by Colombia on labor and materials that are applied to or utilized in performance of this contract.
(2) The procedures in paragraph (c) are based on the current local tax relief agreement between the US Government and Colombia and are subject to change.

(c) The following procedures are included in, or are derived from, the agreement negotiated with Colombia and are hereby incorporated into this clause:

"Any quotation, invoice or bill to be submitted to the USG/INL Colombia for payment of cost incurred under this contract should reflect zero value concerning VAT or IVA (Impuesto a las Ventas). Upon contract award, the Office of INL Bogota will issue an exemption letter (Exención de Impuesto) to the awardee to be presented to the Government of Colombia for any claim that may arise during the performance of this contract. The awardee, not the USG will coordinate directly with the Government of Colombia on any VAT or IVA matter under this contract".

(d) Remedies. The Government may impose the following remedies in the event the Contractor fails to follow the procedures outlined in paragraph (c) of this clause. These actions are in addition to any other remedies available to the Government:
(1) The Contracting Officer may suspend contract payments in accordance with the procedures at FAR 32.503-6(a)(1).
(2) The Contracting Officer may terminate the contract for default in accordance with the procedures at FAR Subpart 49.4.

(3) The Contracting Officer may refer the case to the agency suspension and debarment official, in accordance with agency procedures, pursuant to FAR Subpart 9.4.

(e) Audit. The Contracting Officer shall have the right to examine and audit all records and other evidence regarding the Contractor's compliance with the requirements of this clause.

4.0 REQUIRED PRODUCTS / SERVICES

Refer to the Price Schedule (Attachment A).

5.0 DELIVERY AND MARKING INSTRUCTIONS

Upon award/notice to proceed the vendor shall have no more than 84 days for local vendors and 105 days for vendor outside Colombia to deliver the full order. The items/ services being acquired will be donated to the Government of Colombia.

- US VENDORS:
  - Goldbelt Integrated Logistics Services, LLC (GBILS)
  - 10800 NW 21st Street, Suite 100. Miami, FL 33172.
    - Goods shipped in Goldbelt must be consolidated and delivered in a single package. All Partial deliveries must be previously authorized in writing by the procurement and contracts area.

- LOCAL VENDORS:
  - BODEGA INL. Avenida calle 22 68b-75. Barrio Montevideo. Bogota, Colombia.

The Vendor shall deliver ALL contracted items (as per specifications of section 2 of this document) to INL Bogota-Colombia warehouse at Avenida Calle 22 # 68B – 75, Barrio Montevideo, Centro Empresarial CCL.

The installation, configuration and testing of the equipment as per section 2.4 shall be performed by the contractor at International in Colombia-Cartagena, , once placed at end user's facilities (INL POC will notify it. Movement from INL Warehouse to end user's facilities is reasonability of the

end user.). The contractor shall be responsible for their personnel's logistics expenses such as accommodation, meals, and transportation if any.

All items shall be clearly marked as follows:

EMBAJADA DE ESTADOS UNIDOS DE AMERICA - INL
Bogota, Colombia
Order No. (PR15667572)
Item #__of __(*if applicable*)
ATTN: INL/Colombia

(*Improperly marked shipments may be rejected by the Government*)

6.0 PERIOD OF PERFORMANCE (POP)

The contractor shall deliver contracted items in no more than 40 calendar days after the award of the purchase order. Once delivered, end user will move those items from INL Warehouse to end user's facilities in no more than 14 days. Once placed at end user's facilities, the contractor will have 30 additional calendar days to perform the installation and configuration as per section 3. If delivered to Freight Forwarder in Miami, there will be about 21 more days for shipping and customs processing. So, the max. PoP should be 105 days (see chart below).

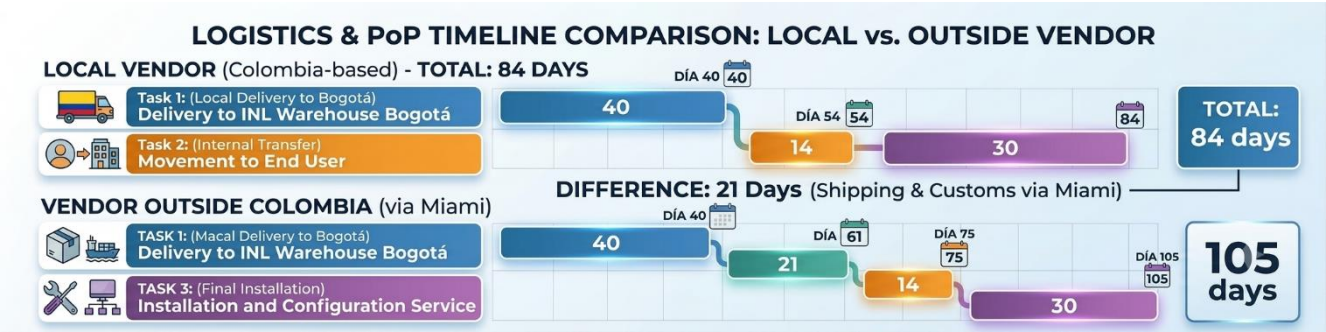

7.0 INVOICING INSTRUCTIONS

Invoices can only be submitted through the Vendor Portal:

- https://mygrants.servicenowservices.com/mygrants
- The Contractor must submit invoice(s) for payment only once product(s) and/ or service(s) are received by Government. **No advance payments are allowed**.
- "Payment Instructions for Submitting Invoices" (video tutorials link included) will be provided along with the Purchase Order.
- Vendors may check Payment Status through the Vendor Portal.
- For Vendor Portal issues, (e.g. account activation, portal questions) please contact BogotaVendorPortal@state.gov.

The Government shall pay the contractor as full compensation for all work required, performed, and accepted under this order 30 days after receipt of the invoice.

The payment term for Vendors delivering to GOLDBELT begins once the goods are reviewed and approved by the US Embassy Bogotá Logistics Unit at Bogotá's INL warehouse. Vendors are advised to keep this process in mind to ensure accurate payment timelines and proper payment control.

Vendors may request a payment status update directly from the Financial Management Center by emailing BogotaPS@state.gov beginning 30 days after submitting an invoice for payment.

A proper invoice must include the following information:

1. Contractor's name and bank account information for payments by wire transfers.
2. Contractor's name, telephone, and mailing address.
3. Invoice date and number.
4. Procurement Request Number (PR).
5. Description, quantity, unit of measure, unit price, and extended price of property delivered, or services performed.
6. Name, title, phone number, and address of person to contact in case of defective invoice.
7. Identification as "Original Invoice." Any copy of an Original Invoice should be marked "Copy of Original Invoice" with a sequential number (1st, 2nd, 3rd, etc.).

Note: If an invoice does not comply with the above requirements, the Embassy reserves the right to reject the invoice as improper and return it to the Contractor within seven (7) calendars days. The Contractor must then resubmit a proper invoice.

We encourage you to subscribe to the myILMS Vendor Portal by sending an email to BogotaVendorPortal@state.gov requesting instructions. If you are already registered, your invoice will only be received by this method. This does not apply to orders approved for credit card payment.

8.0 INSPECTION AND ACCEPTANCE OF SUPPLIES / SERVICES

Unless otherwise specified at the delivery order level, inspection, and acceptance of supplies to be delivered under this contract shall be made at destination by the Contracting Officer (or an authorized representative appointed in accordance with DOSAR 652.242-70).

The vendor is responsible for the delivery of all items listed above under Section 2 (Prices) and Technical Specifications of Items.

The Contractor shall properly pack and consolidate the entire shipment to prevent damage, loss and/or misdirection. The contractor upon notification shall replace any lost or damaged items during shipment.

The items being acquired will be donated to the government of the ultimate destination, Colombia. The contractor shall ensure that all items are prepared for safe shipment and include all necessary export approvals, required material data safety sheet, licenses, and paperwork.

The final inspection and acceptance of ALL items shall be performed upon delivery by the INL delegate. All equipment/item delivered shall conform exactly to or exceed the technical specifications as per section 2.

The payment(s) to the Contractor shall be made following satisfactory inspection and acceptance of contracted items by the INL delegate in Bogotá. Payment process of contracted items delivered to the Freight Forwarder GOLDBELT SECURITY in Miami will initiate only once those items arrive in Bogotá and are satisfactorily inspected and accepted by the INL delegate in Bogotá. If the items or some item does not fulfill contracted technical specifications, INL shall return those items to vendor free of cost. The vendor shall evaluate and replace returned items with no transportation cost to INL.

INL will have 30 calendar days to inspect and accept all items upon delivery.

The designated representative of the INL Bogotá will be responsible for carrying out at least the following checks:

i. Verification of quantities of each contracted item and accessories included.

ii. Compliance with the contracted technical specifications
iii. Correct operation of contracted items once installed

9.0 LAWS AND REGULATIONS

Compliance Required. The Contractor shall, without additional expense to the Government, be responsible for complying with all laws, codes, ordinances, and regulations applicable to the performance of the work, including those of the host country, and with the lawful orders of any governmental authority having jurisdiction. Unless otherwise directed by the Contracting Officer, the Contractor shall comply with the more stringent of the requirements of such laws, regulations, and orders and of the contract. In the event of a conflict between the contract and such laws, regulations and orders, the Contractor shall promptly advise the Contracting Officer of the conflict and of the Contractor's proposed course of action for resolution by the Contracting Officer.

10.0 EXPORT RESTRICTIONS

(a) The Contractor shall comply with all U.S. export control laws and regulations, including but not limited to the International Traffic in Arms Regulations (ITAR), 22 CFR Parts 120 through 130, and the Export Administration Regulations (EAR), 15 CFR Parts 730 through 799, in the performance of this contract.

(b) In the absence of available license exemptions/exceptions, the Contractor shall be responsible for obtaining the appropriate licenses or other approvals, if required, for exports of hardware, technical data, and software, or for the provision of technical assistance.

(c) The Contractor shall be responsible for obtaining export licenses, if required, before utilizing foreign persons in the performance of this order, including instances where the work is to be performed in the US where the foreign person will have access to export-controlled technical data or software.

(d) The Contractor shall be responsible for all regulatory recordkeeping requirements associated with the use of licenses and license exemptions/exceptions.

(e) The Contractor shall be responsible for ensuring that the provisions of this clause apply to its subcontractors.

(f) Nothing in the terms of this contract adds, changes, supersedes, or waives any of the requirements of applicable Federal laws, Executive orders, and regulations.

11.0 INL SOURCE-NATIONALITY RESTRICTIONS

(a) Except as may be specifically approved by the contracting officer, the contractor must procure all commodities (e.g., equipment, materials, vehicles, supplies) and services (including commodity transportation services) in accordance with the requirements at 22 CFR part 228 "Rules on Procurement of Commodities and Services Financed by USAID." Guidance on eligibility of specific goods or services, an applicable INL waivers, may be obtained from the contracting officer.

(b) Restricted goods. The contractor must obtain prior written approval of the contracting officer or comply with required procedures under an applicable waiver as provided by the contracting officer when procuring any of the following goods or services:

(1) Agricultural commodities.
(2) Motor vehicles.
(3) Pharmaceuticals and contraceptive items.
(4) Pesticides.
(5) Fertilizer.
(6) Used equipment; or
(7) U.S. Government-owned excess property.

If the contracting officer determines that the contractor has procured any of these specific restricted goods under this contract without the prior written authorization of the contracting officer or fails to comply with required procedures under an applicable waiver as provided by the contracting officer, and has received payment for such purposes, the contracting officer may require the contractor to refund the entire amount of the purchase.

12.0 NONPAYMENT FOR UNAUTHORIZED WORK

No payments will be made for any unauthorized supplies or services, or for any unauthorized changes to the work specified herein. This includes any services performed by the Contractor of his own volition or at the request of an individual other than a duly appointed Contracting Officer. Only a duly appointed Contracting Officer is authorized to change the specifications, terms, and/or conditions of this contract.

13.0 STANDARDS OF CONDUCT

The Contractor shall be responsible for maintaining satisfactory standards of employee competency, conduct, appearance, and integrity always and shall be responsible for their employee's performance and the quality of the employees' services. Each Contractor employee is expected to adhere to standards of conduct that reflect credit on themselves, their employer, and the U. S. Government. The U.S. Government reserves the right to direct the Contractor to remove an employee from performance under this contract for failure to comply with said standards of conduct. The Contractor shall immediately replace such an employee at no additional cost to the Government.

14.0 CONFIDENTIALITY CLAUSE

The Contractor and its employees shall exercise the utmost discretion concerning all matters relating to their duties and functions. They shall not communicate to any person any information known to them by reason of their performance of services under this contract, which has not been made public, except in the necessary performance of their duties or upon written authorization of the Contracting Officer.

All documents and records (including photographs) generated during the performance of work under this contract shall be for the sole use and become the exclusive property of the Government. Furthermore, no article, book, pamphlet, email, recording, broadcast, speech television appearance, film, or photograph concerning any aspect of work performed under this contract shall be published or disseminated through any media without the prior written authorization of the Contracting Officer. These obligations do not cease upon the expiration or termination of this contract. The Contractor shall include the substance of this provision in all contracts of employment and in all subcontracts hereunder.

Likewise, the CONTRACTOR must be committed under a confidentiality agreement signed with the Colombia National Police, that the information provided may not be partially or totally disclosed to third parties, nor used for purposes other than the development of the contract. Likewise, the CONTRACTOR shall ensure the care, confidentiality and correct use of the information delivered and generated during the execution of the contract, as well as of the elements that the Colombian National Police make available for its execution.

All information resulting from the production of a strategy and a communication plan shall not be disclosed or used by the contracted company. U.S. Embassy Bogota has all rights to any research and final products.

15.0 CONTRACTOR COMMITMENTS, WARRANTIES, AND REPRESENTATIONS

Any written commitment by the Contractor within the scope of this contract shall be binding upon the Contractor. To this clause, a written commitment by the Contractor is limited to the quotation submitted by the Contractor, and to specific written modifications to the quotation. Written commitments by the Contractor are further defined as including (1) any warranty or representation made by the Contractor in a quotation as to hardware or software performance; total systems performance; and other physical, design, or functional characteristics of equipment, software package or system, or installation date; (2) any warranty or representation made by the Contractor concerning the characteristics or items described in (1) above, made in any publications, drawings, or specifications accompanying or referred to in a quotation; and (3) any modification of or affirmation or representation as to the above which is made by the Contractor in or during the course of negotiations, whether or not incorporated into a formal revision to the quotation.

16.0 WARRANTY NOTIFICATION

In accordance with FAR 46.706(b)(5), the Contractor shall stamp or mark the supplies delivered, or otherwise furnish notice with the supplies, of the existence of a warranty, if any. Sufficient information shall be presented for supply personnel and users to identify warranted supplies.

Warranty shall be effective in Colombia. Re-exporting procedures during the warranty period, if requested, shall be covered by the contractor during the term of the same. Warranty, maintenance and support must be provided in country (Colombia).

The vendor must provide quality warranty for at least one (1) year for the above items (referring to tangible elements), or as stated in the technical specifications of each item. If INL receives a warranty claim for any product(s), it will be sent to the vendor's location to perform an evaluation, with no charge to INL, to verify the status of the claim and the product. If the warranty department of the vendor determines that the product has a defect covered under the warranty, vendor must replace it. INL is not responsible for any transportation charges. Replacement products must be in new condition.

The vendor must guarantee, through a certification, that the manufacturer's representative is able to provide support within Colombia, at least in the main cities. During the warranty period, the contractor must respond to any technical requests over the phone or e-mail in a maximum of two hours. During the warranty period, the contractor must repair the equipment and leave it in perfect operating condition at a maximum response time of 48 hours, at the site of the request.

All items shall be brand new (items remanufactured or manufactured with reused materials are NOT acceptable), covered by manufacturer's warranty for each contracted item as per section 2 applicable in Colombia, and procured through a manufacturer approved distribution channel (if requested by the INL delegate, the contractor shall provide certificates to demonstrate the origin of the equipment delivered). The contractor shall use commercially reasonable efforts to correct any substantial nonconformity or manufacturing defect of the contracted items upon delivery and installation during their warranty period and be responsible for repairing them or providing replacement for others of the same or higher technical characteristics and deliver them to the INL warehouse free of charge. Warranty should cover at least hardware defects, component failure and parts/labor for repairs.

17.0 FINAL DATA DELIVERABLES / REPORTS.

As required.

18.0 ORGANIZATIONAL CONFLICT OF INTEREST - GENERAL

(a) The Contractor warrants that, to the best of its knowledge and belief, there are no relevant facts or circumstances which would give rise to an organizational conflict of interest, as defined in FAR Subpart 9.5, or that the Contractor has disclosed all such relevant information.

(b) The Contractor agrees that if an actual or potential organizational conflict of interest is discovered after award, the Contractor will make a full disclosure in writing to the Contracting Officer. This disclosure shall include a description of actions which the Contractor has taken or proposes to take to avoid or mitigate the actual or potential conflict.

(c) If the Contractor was aware of a potential organizational conflict of interest prior to award or discovered an actual or potential conflict after award and did not disclose or misrepresented relevant information to the Contracting Officer, the Government may terminate the contract for default.

(d) The Contractor shall insert the substance of this clause, including this paragraph (d), in all subcontracts.

SECTION 2 - CONTRACT CLAUSES

I. FAR 52.252-2 -- Clauses Incorporated by Reference

As prescribed in 52.107(b), insert the following clause:

CLAUSES INCORPORATED BY REFERENCE (FEB 1998)

This contract incorporates one or more clauses by reference, with the same force and effect as if they were given in full text. Upon request, the Contracting Officer will make their full text available. Also, the full text of a clause may be accessed electronically at this/these address(es):

NUMBER	TITLE	DATE
52.203-12	Limitation on Payments to Influence Certain Federal Transactions	Jun-2020
52.203-17	Contractor Employee Whistleblower Rights.	Nov-2023
52.204-7	System for Award Management – Registration	Nov-2025
52.204-13	System for Award Management – Maintenance	Nov-2025
52.209-2	Prohibition on Contracting with Inverted Domestic Corporations—Representation	Nov-2025
52.209-6	Protecting the Government's Interest When Subcontracting with Contractors Debarred, Suspended, Proposed for Debarment, or Voluntarily Excluded.	Nov-2025
52.209-10	Prohibition on Contracting with Inverted Domestic Corporations	Nov-2025
52.222-19	Child Labor-Cooperation with Authorities and Remedies	Nov-2025
52.222-50	Combating Trafficking in Persons	Nov-2025
52.225-14	Inconsistency Between English Version and Translation of Contract.	Feb-2000
52.226-8	Encouraging Contractor Policies to Ban Text Messaging While Driving	May-2024
52.228-3	"DBA Insurance" – Workers' Compensation Insurance (Defense Base Act).	Jul-2014
52.232-24	Prohibition of Assignment of Claims	May-2014
52.232-33	Payment by Electronic Funds Transfer-System for Award Management	Oct-2018
52.232-40	Providing Accelerated Payments to Small Business Subcontractors	Mar-2023
52.233-3	Protest After Award	Nov-2025
52.233-4	Applicable Law for Breach of Contract Claim	Nov-2025
52.244-6	Subcontracts for Commercial Products and Commercial Services.	Nov-2025
52.249-1	Termination for Convenience of the Government (Fixed-Price) (Short Form)	Apr-1984

NUMBER	TITLE	DATE
52.249-4	Termination for Convenience of the Government (Services) (Short Form)	Apr-1984
652.229-70	Excise Tax Exemption Statement for Contractors Within the United States	Jul-1988
652.229-71	Personal property Disposition at Posts Abroad	Aug-1999
652.242-73	Authorization and Performance	Aug-1999
652.243-70	Notices	Aug-1999
652.247-70	Notice of Shipments	Feb-2015
652.247-71	Shipping Instructions	Feb-2015

II. Applicable Clauses Provided in Full-Text

FAR 52.212-4 Terms and Conditions—Commercial Products and Commercial Services

As prescribed in 12.205(b)(3), insert the following clause:

TERMS AND CONDITIONS—COMMERCIAL PRODUCTS AND COMMERCIAL SERVICES (NOV.2025)

(a) Definitions. The clause at Federal Acquisition Regulation (FAR) 52.202-1, Definitions, is incorporated by reference.

(b) Inspection/Acceptance. The Contractor shall only tender for acceptance those items that conform to the requirements of this contract. The Government reserves the right to inspect or test any supplies or services that have been tendered for acceptance. The Government may require repair or replacement of nonconforming supplies or reperformance of nonconforming services at no increase in contract price. If repair/replacement or reperformance will not correct the defects or is not possible, the Government may seek an equitable price reduction or adequate consideration for acceptance of nonconforming supplies or services. The Government must exercise its post acceptance rights—

(1) Within a reasonable time after the defect was discovered or should have been discovered; and

(2) Before any substantial change occurs in the condition of the item, unless the change is due to the defect in the item.

(c) Assignment. The Contractor or its assignee may assign its rights to receive payment due as a result of performance of this contract to a bank, trust company, or other financing institution, including any Federal lending agency in accordance with the Assignment of Claims Act (31 U.S.C. 3727). However,

when a third party makes payment (e.g., use of the Governmentwide commercial purchase card), the Contractor may not assign its rights to receive payment under this contract.

(d) Changes. Changes in the terms and conditions of this contract may be made only by written agreement of the parties.

(e) Disputes. This contract is subject to 41 U.S.C. chapter 71, Contract Disputes. Failure of the parties to this contract to reach agreement on any request for equitable adjustment, claim, appeal, or action arising under or relating to this contract shall be a dispute to be resolved in accordance with the clause FAR 52.233-1, Disputes, which is incorporated in this contract by reference. The Contractor shall proceed diligently with performance of this contract, pending final resolution of any dispute arising under the contract.

(f) Excusable delays. The Contractor shall be liable for default unless nonperformance is caused by an occurrence beyond the reasonable control of the Contractor and without its fault or negligence. Examples of occurrences include acts of God or the public enemy, acts of the Government in either its sovereign or contractual capacity, fires, floods, epidemics, quarantine restrictions, strikes, unusually severe weather, and delays of common carriers. When an excusable delay occurs, the Contractor shall—

(1) Notify the Contracting Officer in writing as soon as possible.

(2) Remedy the delay as quickly as possible; and

(3) Notify the Contracting Officer when the occurrence is over.

(g) Invoice. The Government will handle invoices according to the Prompt Payment Act (31 U.S.C. 3903) and 5 CFR part 1315. The Contractor shall submit invoices to the address designated in the contract to receive invoices. An invoice must include the information required by 5 CFR part 1315.9(b).

(h) Patent indemnity. The Contractor shall indemnify the Government and its officers, employees, and agents against liability, including costs, for actual or alleged direct or contributory infringement of, or inducement to infringe, any United States or foreign patent, trademark, or copyright, arising out of the performance of this contract, provided the Contractor is reasonably notified of such claims and proceedings.

(i) Payment—

(1) Items accepted. Payment shall be made for items accepted by the Government that have been delivered to the delivery destinations set forth in this contract.

(2) Prompt payment. The Government will make payment in accordance with the Prompt Payment Act (31 U.S.C. 3903) and prompt payment regulations at 5 CFR part 1315.

(3) Discount. In connection with any discount offered for early payment, time shall be computed from the date of the invoice. For the purpose of computing the discount earned, payment shall be considered to have been made on the date that appears on the payment check or the specified payment date if an electronic funds transfer payment is made.

(4) Overpayments. If the Contractor becomes aware of a duplicate contract financing or invoice payment or that the Government has otherwise overpaid on a contract financing or invoice payment, the Contractor shall—

(i) Remit the overpayment amount to the payment office cited in the contract along with a description of the overpayment including the—

(A) Circumstances of the overpayment (e.g., duplicate payment, erroneous payment, liquidation errors, date(s) of overpayment);

(B) Affected contract number and delivery order number, if applicable;

(C) Affected line item or subline item, if applicable;

(D) Contractor point of contact; and

(ii) Provide a copy of the remittance and supporting documentation to the Contracting Officer.

(5) Interest. (i) All amounts that become payable by the Contractor to the Government under this contract shall bear simple interest from the date due until paid unless paid within 30 days of becoming due. The interest rate shall be the interest rate established by the Secretary of the Treasury as provided in 41 U.S.C. 7109, which is applicable to the period in which the amount becomes due, as provided in (i)(6)(v) of this clause, and then at the rate applicable for each six-month period as fixed by the Secretary until the amount is paid.
(ii) The Government may issue a demand for payment to the Contractor upon finding a debt is due under the contract.

(iii) Final decisions. The Contracting Officer will issue a final decision as required by FAR part 33 if–

(A) The Contracting Officer and the Contractor are unable to reach agreement on the existence or amount of a debt within 30 days.

(B) The Contractor fails to liquidate a debt previously demanded by the Contracting Officer within the timeline specified in the demand for payment unless the amounts were not repaid because the Contractor has requested an installment payment agreement; or

(C) The Contractor requests a deferment of collection on a debt previously demanded by the Contracting Officer (see FAR part 32).

(iv) If a demand for payment was previously issued for the debt, the demand for payment included in the final decision shall identify the same due date as the original demand for payment.

(v) Amounts shall be due at the earliest of the following dates:

(A) The date fixed under this contract.

(B) The date of the first written demand for payment, including any demand for payment resulting from a termination for cause.

(vi) The interest charge shall be computed for the actual number of calendar days involved beginning on the due date and ending on-

(A) The date on which the designated office receives payment from the Contractor.

(B) The date of issuance of a government check to the Contractor from which an amount otherwise payable has been withheld as a credit against the contract debt; or

(C) The date on which an amount withheld and applied to the contract debt would otherwise have become payable to the Contractor.

(vii) The interest charge made under this clause may be reduced under the procedures for interest credits prescribed in FAR part 32 in effect on the date of this contract.

(j) Risk of loss. Unless the contract specifically provides otherwise, risk of loss or damage to the supplies provided under this contract shall remain with the Contractor until, and shall pass to the Government upon—

(1) Delivery of the supplies to a carrier, if transportation is f.o.b. origin; or

(2) Delivery of the supplies to the Government at the destination specified in the contract, if transportation is f.o.b. destination.

(k) Taxes. The contract price includes all applicable Federal, State, and local taxes and duties.

(l) Termination for the Government's convenience. The Government reserves the right to terminate this contract, or any part hereof, for its sole convenience. In the event of such termination, the Contractor shall immediately stop all work and shall immediately cause any and all of its suppliers and subcontractors to cease work. Subject to the terms of this contract, the Contractor shall be paid a percentage of the contract price reflecting the percentage of the work performed prior to the notice of termination, plus reasonable charges the Contractor can demonstrate to the satisfaction of the Government using its standard record keeping system, have resulted from the termination. The Contractor shall not be required to comply with the cost accounting standards or contract cost principles for this purpose. This paragraph does not give the Government any right to audit the Contractor's records. The Contractor shall not be paid for any work performed or costs incurred which reasonably could have been avoided.

(m) Termination for cause. The Government may terminate this contract, or any part hereof, for cause in the event of any default by the Contractor, or if the Contractor fails to comply with any contract terms and conditions, or fails to provide the Government, upon request, with adequate assurances of future performance. The Government will send a cure notice to the Contractor, unless the reason for the termination is late delivery. In the event of termination for cause, the Government shall not be liable to the Contractor for any amount for supplies or services not accepted, and the Contractor shall be liable to the Government for any and all rights and remedies provided by law. If it is determined that the Government improperly terminated this contract for default, such termination shall be deemed a termination for convenience.

(n) Title. Unless specified elsewhere in this contract, title to items furnished under this contract shall pass to the Government upon acceptance, regardless of when or where the Government takes physical possession.

(o) Warranty. The Contractor warrants and implies that the items delivered under this contract are merchantable and fit for use for the particular purpose described in this contract.

(p) Limitation of liability. Except as otherwise provided by an express warranty, the Contractor will not be liable to the Government for consequential damages resulting from any defect or deficiencies in accepted items.

(q) Compliance with laws unique to Government contracts. The Contractor agrees to comply with 31 U.S.C. 1352 relating to limitations on the use of appropriated funds to influence certain Federal contracts; 40 U.S.C. chapter 37, Contract Work Hours and Safety Standards; 41 U.S.C. chapter 87, Kickbacks; 49 U.S.C. 40118, Government-financed air transportation; and 41 U.S.C. chapter 21 relating to procurement integrity.

(r) Order of precedence. Any inconsistencies in this solicitation or contract shall be resolved by giving precedence in the following order:

(1) The schedule of supplies/services;

(2) The Disputes, Payments, Invoice, Compliance with Laws Unique to Government Contracts, and Unauthorized Obligations paragraphs of this clause;

(3) Other contract clauses incorporated in the solicitation or contract;

(4) Addenda to this solicitation or contract;

(5) Solicitation provisions incorporated in the solicitation;

(6) Other paragraphs of this clause;

(7) Other documents, exhibits, and attachments; and

(8) The specification.

(s) Unauthorized obligations.

(1) Except as stated in paragraph (s)(2) of this clause, when any supply or service acquired under this contract is subject to any End User License Agreement (EULA), Terms of Service (TOS), or similar legal instrument or agreement, that includes any clause requiring the Government to indemnify the

Contractor or any person or entity for damages, costs, fees, or any other loss or liability that would create an Anti-Deficiency Act violation (31 U.S.C. 1341), the following shall govern:

(i) Any such clause is unenforceable against the Government.

(ii) Neither the Government nor any Government-authorized end user shall be deemed to have agreed to such clause by virtue of it appearing in the EULA, TOS, or similar legal instrument or agreement. If the EULA, TOS, or similar legal instrument or agreement is invoked through an "I agree" click box or other comparable mechanism (e.g., "click-wrap" or "browse-wrap" agreements), execution does not bind the Government or any Government authorized end user to such clause.

(iii) Any such clause is deemed to be stricken from the EULA, TOS, or similar legal instrument or agreement.

(2) Paragraph (s)(1) of this clause does not apply to indemnification by the Government that is expressly authorized by statute and specifically authorized under applicable agency regulations and procedures.

(t) Comptroller General examination of record. This paragraph applies if this contract was awarded using other than sealed bid procedures and is in excess of the simplified acquisition threshold on the date of award of this contract.

(1) The Comptroller General of the United States, or an authorized representative of the Comptroller General, shall have access to and right to examine any of the Contractor's directly pertinent records involving transactions related to this contract.

(2) The Contractor shall make available at its offices, at all reasonable times, the records, materials, and other evidence for examination, audit, or reproduction, until 3 years after final payment under this contract or for any shorter period specified in FAR part 4, longer period required by statute, or periods specified in other clauses of this contract. If this contract is completely or partially terminated, the records relating to the work terminated shall be made available for 3 years after any resulting final termination settlement. Records relating to appeals under the disputes clause or to litigation or the settlement of claims arising under or relating to this contract shall be made available until such appeals, litigation, or claims are finally resolved.

(3) As used in this clause, records include books, documents, accounting procedures and practices, and other data, regardless of type and regardless of form. This clause does not require the Contractor to create or maintain any record that the Contractor does not maintain in the ordinary course of business or pursuant to a provision of law.

(u) Incorporation by reference. The Contractor's representations and certifications, including those completed electronically via the System for Award Management (SAM), are incorporated by reference into the contract.

(End of clause)

NOTE: This acquisition is subject to exemption, therefore the prohibitions in paragraph (c) of FAR 52.240-91 Security Prohibitions and Exclusions do not apply.

FAR 52.240-91 Security Prohibitions and Exclusions.

As prescribed in 40.205(b), insert the following clause:

SECURITY PROHIBITIONS AND EXCLUSIONS (NOV-2025)

(a) Definitions. As used in this clause—

American Security Drone Act-covered foreign entity means an entity included on a list that the Federal Acquisition Security Council (FASC) develops and maintains and publishes in the System for Award Management (SAM) at https://www.sam.gov (section 1822 of Pub. L. 118-31, 41 U.S.C. 3901 note prec.).

Backhaul means intermediate links between the core network, or backbone network, and the small subnetworks at the edge of the network (e.g., connecting cell phones/towers to the core telephone network). Backhaul can be wireless (e.g., microwave) or wired (e.g., fiber optic, coaxial cable, Ethernet).

Covered application means the social networking service TikTok or any successor application or service developed or provided by ByteDance Limited or an entity owned by ByteDance Limited.

Covered article, as defined in 41 U.S.C. 4713(k), means:

(1) Information technology, as defined in 40 U.S.C. 11101, including cloud computing services of all types;

(2) Telecommunications equipment or telecommunications service, as those terms are defined in section 3 of the Communications Act of 1934 (47 U.S.C. 153);

(3) The processing of information on a Federal or non-Federal information system, subject to the requirements of the Controlled Unclassified Information program (see 32 CFR part 2002); or

(4) Hardware, systems, devices, software, or services that include embedded or incidental information technology.

Covered foreign country means The People's Republic of China.

Covered telecommunications equipment or services means—

(1) Telecommunications equipment produced by Huawei Technologies Company or ZTE Corporation (or any subsidiary or affiliate of such entities);

(2) For the purpose of public safety, security of Government facilities, physical security surveillance of critical infrastructure, and other national security purposes, video surveillance and telecommunications equipment produced by Hytera Communications Corporation, Hangzhou Hikvision Digital Technology Company, or Dahua Technology Company (or any subsidiary or affiliate of such entities);

(3) Telecommunications or video surveillance services provided by such entities or using such equipment; or

(4) Telecommunications or video surveillance equipment or services produced or provided by an entity that the Secretary of Defense, in consultation with the Director of National Intelligence or the Director of the Federal Bureau of Investigation, reasonably believes to be an entity owned or controlled by, or otherwise connected to, the government of a covered foreign country.

Critical technology means—

(1) Defense articles or defense services included on the United States Munitions List set forth in the International Traffic in Arms Regulations under subchapter M of chapter I of title 22, Code of Federal Regulations;

(2) Items included on the Commerce Control List set forth in Supplement No. 1 to part 774 of the Export Administration Regulations under subchapter C of chapter VII of title 15, Code of Federal Regulations, and controlled—

(i) Pursuant to multilateral regimes, including for reasons relating to national security, chemical and biological weapons proliferation, nuclear nonproliferation, or missile technology; or

(ii) For reasons relating to regional stability or surreptitious listening;

(3) Specially designed and prepared nuclear equipment, parts and components, materials, software, and technology covered by part 810 of title 10, Code of Federal Regulations (relating to assistance to foreign atomic energy activities);

(4) Nuclear facilities, equipment, and material covered by part 110 of title 10, Code of Federal Regulations (relating to export and import of nuclear equipment and material);

(5) Select agents and toxins covered by part 331 of title 7, Code of Federal Regulations, part 121 of title 9 of such Code, or part 73 of title 42 of such Code; or

(6) Emerging and foundational technologies controlled pursuant to section 1758 of the Export Control Reform Act of 2018 (50 U.S.C. 4817).

FASC-prohibited unmanned aircraft system means an unmanned aircraft system manufactured or assembled by an American Security Drone Act—covered foreign entity.

FASCSA order means any of the following orders issued under the Federal Acquisition Supply Chain Security Act (FASCSA) requiring removing covered articles from executive agency information systems or excluding one or more named sources or named covered articles from executive agency procurement actions, as described in 41 CFR 201-1.303(d) and (e):

(1) The Secretary of Homeland Security may issue FASCSA orders that apply to civilian agencies, to the extent not covered by paragraph (2) or (3) of this definition. This type of FASCSA order may be referred to as a Department of Homeland Security (DHS) FASCSA order.

(2) The Secretary of Defense may issue FASCSA orders that apply to the Department of Defense (DoD) and national security systems other than sensitive compartmented information systems. This type of FASCSA order may be referred to as a DoD FASCSA order.

(3) The Director of National Intelligence (DNI) may issue FASCSA orders that apply to the intelligence community and sensitive compartmented information systems, to the extent not covered by paragraph (2) of this definition. This type of FASCSA order may be referred to as a DNI FASCSA order.

Information technology, as defined in 40 U.S.C. 11101(6)—

(1) Means any equipment or interconnected system or subsystem of equipment, used in the automatic acquisition, storage, analysis, evaluation, manipulation, management, movement, control, display, switching, interchange, transmission, or reception of data or information by the executive agency, if the equipment is used by the executive agency directly or is used by a contractor under a contract with the executive agency that requires the use—

(i) Of that equipment; or

(ii) Of that equipment to a significant extent in the performance of a service or the furnishing of a product;

(2) Includes computers, ancillary equipment (including imaging peripherals, input, output, and storage devices necessary for security and surveillance), peripheral equipment designed to be controlled by the central processing unit of a computer, software, firmware and similar procedures, services (including support services), and related resources; but

(3) Does not include any equipment acquired by a Federal contractor incidental to a Federal contract.

Intelligence community, as defined by 50 U.S.C. 3003(4), means the following—

(1) The Office of the Director of National Intelligence;

(2) The Central Intelligence Agency;

(3) The National Security Agency;

(4) The Defense Intelligence Agency;

(5) The National Geospatial-Intelligence Agency;

(6) The National Reconnaissance Office;

(7) Other offices within the Department of Defense for the collection of specialized national intelligence through reconnaissance programs;

(8) The intelligence elements of the Army, the Navy, the Air Force, the Marine Corps, the Coast Guard, the Federal Bureau of Investigation, the Drug Enforcement Administration, and the Department of Energy;

(9) The Bureau of Intelligence and Research of the Department of State;

(10) The Office of Intelligence and Analysis of the Department of the Treasury;

(11) The Office of Intelligence and Analysis of the Department of Homeland Security; or

(12) Such other elements of any department or agency as may be designated by the President, or designated jointly by the Director of National Intelligence and the head of the department or agency concerned, as an element of the intelligence community.

Interconnection arrangements means arrangements governing the physical connection of two or more networks to allow the use of another's network to hand off traffic where it is ultimately delivered (e.g., connecting a customer of telephone provider A to a customer of telephone company B) or sharing data and other information resources.

Kaspersky Lab-covered article means any hardware, software, or service that—

(1) Is developed or provided by a Kaspersky Lab-covered entity;

(2) Includes any hardware, software, or service developed or provided in whole or in part by a Kaspersky Lab-covered entity; or

(3) Contains components using any hardware or software developed in whole or in part by a Kaspersky Lab-covered entity.

Kaspersky Lab-covered entity means—

(1) Kaspersky Lab;

(2) Any successor entity to Kaspersky Lab, including any change in name, e.g., "Kaspersky";

(3) Any entity that controls, is controlled by, or is under common control with Kaspersky Lab; or

(4) Any entity of which Kaspersky Lab has a majority ownership.

National security system, as defined in 44 U.S.C. 3552, means any information system (including any telecommunications system) used or operated by an agency or by a contractor of an agency, or other organization on behalf of an agency—

(1) The function, operation, or use of which involves intelligence activities; involves cryptologic activities related to national security; involves command and control of military forces; involves equipment that is an integral part of a weapon or weapons system; or is critical to the direct fulfillment of military or intelligence missions, but does not include a system that is to be used for routine administrative and business applications (including payroll, finance, logistics, and personnel management applications); or

(2) Is protected at all times by procedures established for information that have been specifically authorized under criteria established by an Executive order or an Act of Congress to be kept classified in the interest of national defense or foreign policy.

Roaming means cellular communications services (e.g., voice, video, data) received from a visited network when unable to connect to the facilities of the home network either because signal coverage is too weak or because traffic is too high.

Sensitive compartmented information means classified information concerning or derived from intelligence sources, methods, or analytical processes, which is required to be handled within formal access control systems established by the Director of National Intelligence.

Sensitive compartmented information system means a national security system authorized to process or store sensitive compartmented information.

Source means a non-Federal supplier, or potential supplier, of products or services, at any tier.

Subsidiary means an entity in which more than 50 percent of the entity is owned directly by a parent corporation or through another subsidiary of a parent corporation.

Substantial or essential component means any component necessary for the proper function or performance of a piece of equipment, system, or service.

Unmanned aircraft means an aircraft that is operated without the possibility of direct human intervention from within or on the aircraft (49 U.S.C. 44801(11)).

Unmanned aircraft system means an unmanned aircraft and associated elements (including communication links and the components that control the unmanned aircraft) that are required for the operator to operate safely and efficiently in the national airspace system (49 U.S.C. 44801(12)).

(b) Prohibitions on providing or using specific products or services in performance of contract. Unless a waiver or exception applies, the Contractor is prohibited from providing any products or services to the Government or using in the performance of the contract any of the following:

(1) A covered application on any information technology owned or managed by the Government, or on any information technology used or provided by the Contractor under this contract, including equipment provided by the Contractor's employees (section 102 of Division R of the Consolidated Appropriations Act, 2023 (Pub. L. 117-328));

(2) A Kaspersky Lab-covered article (Section 1634 of Division A of the National Defense Authorization Act for Fiscal Year 2018 (Pub. L. 115-91));

(3) Covered telecommunications equipment or services used as a substantial or essential component of any system, or as critical technology as part of any system (paragraphs (a)(1)(A) of section 889 of the John S. McCain National Defense Authorization Act for Fiscal Year 2019 (Pub. L. 115-232)). This does not prohibit contractors from providing—

(i) A service that connects to the facilities of a third-party, such as backhaul, roaming, or interconnection arrangements; or

(ii) Telecommunications equipment that cannot route or redirect user data traffic or cannot permit visibility into any user data or packets that such equipment transmits or otherwise handles.

(c) Prohibition on unmanned aircraft systems manufactured or assembled by American Security Drone Act—covered foreign entities.

(1) Prohibition. The Contractor is prohibited from—

(i) Delivering any FASC-prohibited unmanned aircraft system, which includes unmanned aircraft (i.e., drones) and associated elements (sections 1823 and 1826 of American Security Drone Act of 2023,

within the National Defense Authorization Act for Fiscal Year 2024, Pub. L. 118-31, Div. A, Title XVIII, Subtitle B, 41 U.S.C. 3901 note prec.);

(ii) On or after December 22, 2025, operating a FASC-prohibited unmanned aircraft system in the performance of the contract (section 1824 of Pub. L. 118-31); and

(iii) On or after December 22, 2025, using Federal funds to procure or operate a FASC-prohibited unmanned aircraft system (section 1825 of Pub. L. 118-31).

(2) Procedures. The Contractor shall search SAM for the FASC-maintained list of American Security Drone Act—covered foreign entities before proposing, or using in performance of the contract, any unmanned aircraft system. Also, the Contractor shall ensure any effort or expenditure associated with a FASC-prohibited unmanned aircraft system is consistent with a corresponding exemption, exception, or waiver determination expressly stated in the contract.

(3) Exemptions, exceptions, and waivers. The prohibitions in paragraph (c) of this clause do not apply where the agency has determined an exemption, exception, or waiver applies, and the contract indicates that such a determination has been made. See sections 1823 through 1825 and 1832 of Public Law 118-31 for statutory requirements pertaining to exemptions, exceptions, and waivers.

(d) Prohibition on using or providing specific products or services or conducting certain transactions regardless of connection to contract.

(1) Certain telecommunications and video surveillance equipment, systems, or services.

(i) Unless an applicable waiver has been issued by the Government, the Contractor cannot use any equipment, systems, or services that uses covered telecommunications equipment or services as a substantial or essential component of any system, or as critical technology as part of any system (paragraph (a)(1)(B) of section 889 of the John S. McCain National Defense Authorization Act for Fiscal Year 2019 (Pub. L. 115-232)).

(ii) This prohibition applies to using covered telecommunications equipment or services, regardless of whether that use is in performance of work under a Federal contract. This does not prohibit the contractor from using—

(A) A service that connects to the facilities of a third party, such as backhaul, roaming, or interconnection arrangements; or

(B) Telecommunications equipment that cannot route or redirect user data traffic or cannot permit visibility into any user data or packets that such equipment transmits or otherwise handles.

(2) Office of Foreign Assets Control Restrictions.

(i) Except as authorized by the Office of Foreign Assets Control (OFAC) in the Department of the Treasury, the Contractor shall not acquire, for use in the performance of this contract, any supplies or services if any proclamation, Executive order, or statute administered by OFAC, or if OFAC's implementing regulations at 31 CFR chapter V, would prohibit such a transaction by a person subject to the jurisdiction of the United States.

(ii) Except as authorized by OFAC, most transactions involving Cuba, Iran, and Sudan are prohibited, as are most imports from Burma or North Korea, into the United States or its outlying areas.

(A) For lists of entities and individuals subject to economic sanctions, see OFAC's List of Specially Designated Nationals and Blocked Persons at https://home.treasury.gov/policy-issues/financial-sanctions/specially-designated-nationals-and-blocked-persons-list-sdn-human-readable-lists.

(B) For more information about these restrictions, as well as updates, see OFAC's regulations at 31 CFR chapter V and at https://home.treasury.gov/policy-issues/office-of-foreign-assets-control-sanctions-programs-and-information.

(C) To conduct electronic screens of potential parties to regulated transactions, see the consolidated screening list at https://www.trade.gov/consolidated-screening-list, which consolidates multiple export screening lists of the Departments of Commerce, State, and the Treasury.

(3) Sudan prohibition. The Contractor is prohibited from conducting any restricted business operations in Sudan in accordance with Accountability and Divestment Act of 2007 (Pub. L. 110-174).

(4) Iran prohibitions.

(i) Unless an exception applies according to paragraph (d)(4)(iii) or the Government grants a waiver, the contractor shall not engage in certain activities or transactions relating to Iran (section 6(b)(1)(A) of Iran Sanctions Act (50 U.S.C. 1701 note).

(ii) Unless an exception applies according to paragraph (d)(4)(iii) or the Government grants a waiver, contractor shall not export certain sensitive technology to Iran, as determined by the President, and has an active exclusion in SAM (22 U.S.C. 8515).

(iii) The prohibition in paragraphs (d)(4)(i) and (d)(4)(ii) do not apply if the acquisition is subject to trade agreements and the offeror certifies that all the offered products are designated country end products or designated country construction material (see part 25).

(iv) Unless an exception applies or the Government grants a waiver, contractors are prohibited from knowingly engaging in any significant transaction (i.e., over $15,000) with Iran's Revolutionary Guard Corps or any of its officials, agents, or affiliates, the property and interests in property of which are blocked according to the International Emergency Economic Powers Act (section 6(b)(1)(B) of Iran Sanctions Act (50 U.S.C. 1701 note)).

(e) Governmentwide exclusion and removal orders.

(1) Unless the Government has issued an applicable waiver, contractors shall not provide or use as part of the performance of the contract any covered article, or any products or services produced or provided by a source, if the covered article or the source is prohibited by an applicable FASCSA order as follows:

(i) For solicitations and contracts awarded by a Department of Defense contracting office, DoD FASCSA orders apply.

(ii) For all other solicitations and contracts, DHS FASCSA orders apply.

(2) The Contractor shall search for the phrase "FASCSA order" in the System for Award Management (SAM) at https://www.sam.gov to locate applicable FASCSA orders.

(3) The Government may identify in the solicitation other FASCSA orders that are not in SAM, which are effective and apply to the solicitation and resulting contract.

(4) A FASCSA order issued after the date of solicitation applies to this contract only if added by an amendment to the solicitation or modification to the contract (see FAR 40.204-1(c)).

(f) Reasonable inquiry. The contractor shall conduct a reasonable inquiry to determine if there are any prohibited products or services. The inquiry will look at any information in the entity's possession but does not need to include an internal or third-party audit.

(g) Removal of prohibited products and services. For Federal Supply Schedules, Governmentwide acquisition contracts, multi-agency contracts or any other procurement instrument intended for use by multiple agencies, upon notification from the Contracting Officer, during the performance of the

contract, the Contractor shall promptly make any necessary changes or modifications to remove any product or service produced or provided by a source that this clause prohibits.

(h) General report.

(1) If the Contractor identifies or is notified by any source, (including a subcontractor at any tier), that any product or service provided or used (or to be provided or used) during contract performance does not comply with any prohibition in this clause, then the Contractor shall report the following information, or as much information is known, in writing to the contracting office as identified in paragraph (h)(2) within 72 hours:

(i) Contract number and order number, if applicable;

(ii) The specific prohibition the product or service is not complying with;

(iii) A description of the products or services that the Contractor identifies or has reason to suspect is prohibited (include brand; model number, such as the original equipment manufacturer (OEM) number, manufacturer part number, or wholesaler number; and item description, as applicable);

(iv) The entity that produced the product or service (include entity name, unique entity identifier, Contractor and Government Entity (CAGE) code, facilities responsible for design, fabrication, assembly, packaging, and test of the product, and whether the entity was the OEM or a distributor (provide manufacturer codes and distributor codes used for the product));

(v) Description of the functionality of the product or service and how that functionality impacts the risk to the product or service;

(vi) An explanation of any factors relevant to determining if the product or service should be permitted by an applicable exception, exemption, or waiver (if the contractor would like the Government to consider a waiver, and asks for such a waiver);

(vii) Whether alternative products or services are available that would comply with the prohibition;

(viii) If the product or service is related to item maintenance, include the following information on the item being maintained:

(A) Brand;

(B) Model number, OEM number, manufacturer part number, or wholesaler number; and

(C) Item description, as applicable.

(ix) Any readily available information about mitigation actions implemented or recommended.

(2) If a report must be submitted to a contracting office, the Contractor shall submit the report as follows:

(i) If a Department of Defense contracting office, the Contractor shall report to the website at https://dibnet.dod.mil.

(ii) For all other contracting offices, the Contractor shall report to the Contracting Officer.

(iii) For indefinite delivery contracts, the Contractor shall report to both the contracting office for the indefinite delivery contract and the contracting office for any affected order.

(3) If the report provided does not contain any of the information required by paragraph (h)(1) of this clause, and the contractor later discovers new information that is required by paragraph (h)(1) of this clause, then the contractor shall submit a subsequent report within 72 hours of discovering the new information.

(4) The contractor shall also report the information in paragraph (h)(1) if the contractor wishes to ask for a waiver of the requirements of a new FASCSA order being applied through modification.

(i) New FASCSA orders report.

(1) During contract performance, the Contractor shall review SAM at least once every three months, or as advised by the Contracting Officer, to check for covered articles subject to FASCSA order(s), or for products or services produced by a source subject to FASCSA order(s) not currently identified under paragraph (e) of this clause.

(2) If the Contractor identifies a new FASCSA order(s) that could impact their supply chain, then the Contractor shall conduct a reasonable inquiry to identify whether a covered article or product or service produced or provided by a source subject to the FASCSA order(s) was provided to the Government or used during contract performance. The inquiry will look at any information in the entity's possession but does not need to include an internal or third-party audit.

(3) The Contractor shall submit a report to the contracting office identified in paragraph (h)(2) of this clause if the Contractor identifies, including through any notification by a subcontractor at any tier, that a covered article or product or service produced or provided by a source was provided to the Government or used during contract performance and is subject to a FASCSA order(s). For indefinite delivery contracts, the Contractor shall report to both the contracting office for the indefinite delivery contract and the contracting office for any affected order. The Contractor shall report the following information within 72 hours for each covered article or each product or service produced or provided by a source, where the covered article or source is subject to a FASCSA order:

(i) Contract number and order number, if applicable;

(ii) Name of the covered article or source subject to a FASCSA order;

(iii) The specific FASCSA order the product or service does not comply with;

(iv) The elements of (h)(1)(iii) through (ix) of this clause.

(j) Subcontracts. The Contractor shall insert the substance of this clause, including this paragraph (j) but excluding subparagraphs (d)(1) and (i)(1), in all subcontracts and other contractual instruments, including subcontracts for acquiring commercial products or commercial services.

(End of clause)

SUBCONTRACTING

"The project or purchase order award, will recognize the vendor who is an original manufacturer, representative or approved distributor and who guarantees after-sales service. If the vendor plans to subcontract any of the items or services included in the RFQ. Seller shall provide in its proposal details of its subcontractors, including contacts and references/recommendations. If he is a representative, he must include a letter from the brand company he represents.

The Government will determine vendor responsibility by analyzing whether the apparent awardee meets the requirements of FAR 9.1. Prior to award, the U.S. Government reserves the right to visit the manufacturer's plant or subcontractor's plants to verify that the items or goods and services offered meet the technical requirements of the RFQ and determine appropriate contractor responsibility. “ to

verify that the items or goods and services offered complies with the technical requirements of the RFQ and determine adequate contractor's responsibility"

(End of clause)

FAR 52.242-14 Suspension of Work.

As prescribed in 42.1005(a), insert the following clause:

SUSPENSION OF WORK (APR 1984)

(a) The Contracting Officer may order the Contractor, in writing, to suspend, delay, or interrupt all or any part of the work of this contract for the period of time that the Contracting Officer determines appropriate for the convenience of the Government.

(b) If the performance of all or any part of the work is, for an unreasonable period of time, suspended, delayed, or interrupted (1)by an act of the Contracting Officer in the administration of this contract, or (2)by the Contracting Officer's failure to act within the time specified in this contract (or within a reasonable time if not specified), an adjustment shall be made for any increase in the cost of performance of this contract (excluding profit) necessarily caused by the unreasonable suspension, delay, or interruption, and the contract modified in writing accordingly. However, no adjustment shall be made under this clause for any suspension, delay, or interruption to the extent that performance would have been so suspended, delayed, or interrupted by any other cause, including the fault or negligence of the Contractor, or for which an equitable adjustment is provided for or excluded under any other term or condition of this contract.

(c) A claim under this clause shall not be allowed-

(1) For any costs incurred more than 20 days before the Contractor shall have notified the Contracting Officer in writing of the act or failure to act involved (but this requirement shall not apply as to a claim resulting from a suspension order); and

(2) Unless the claim, in an amount stated, is asserted in writing as soon as practicable after the termination of the suspension, delay, or interruption, but not later than the date of final payment under the contract.

(End of clause)

FAR 52.242-15 Stop-Work Order.

As prescribed in 42.1005(b), insert the following clause:

STOP-WORK ORDER (AUG 1989)

(a) The Contracting Officer may, at any time, by written order to the Contractor, require the Contractor to stop all, or any part, of the work called for by this contract for a period of 90 days after the order is delivered to the Contractor, and for any further period to which the parties may agree. The order shall be specifically identified as a stop-work order issued under this clause. Upon receipt of the order, the Contractor shall immediately comply with its terms and take all reasonable steps to minimize the incurrence of costs allocable to the work covered by the order during the period of work stoppage. Within a period of 90 days after a stop-work order is delivered to the Contractor, or within any extension of that period to which the parties shall have agreed, the Contracting Officer shall either-

(1) Cancel the stop-work order; or

(2) Terminate the work covered by the order as provided in the Default, or the Termination for Convenience of the Government, clause of this contract.

(b) If a stop-work order issued under this clause is canceled or the period of the order or any extension thereof expires, the Contractor shall resume work. The Contracting Officer shall make an equitable adjustment in the delivery schedule or contract price, or both, and the contract shall be modified, in writing, accordingly, if-

(1) The stop-work order results in an increase in the time required for, or in the Contractor's cost properly allocable to, the performance of any part of this contract; and

(2) The Contractor asserts its right to the adjustment within 30 days after the end of the period of work stoppage; provided, that, if the Contracting Officer decides the facts justify the action, the Contracting Officer may receive and act upon a proposal submitted at any time before final payment under this contract.

(c) If a stop-work order is not canceled and the work covered by the order is terminated for the convenience of the Government, the Contracting Officer shall allow reasonable costs resulting from the stop-work order in arriving at the termination settlement.

(d) If a stop-work order is not canceled and the work covered by the order is terminated for default, the Contracting Officer shall allow, by equitable adjustment or otherwise, reasonable costs resulting from the stop-work order.

(End of clause)

DOSAR 652.239-71 Security Requirements for Unclassified Information Technology Resources.

As prescribed in 639.107–70(b), insert the following clause:

SECURITY REQUIREMENTS FOR UNCLASSIFIED INFORMATION TECHNOLOGY RESOURCES (SEP 2007)

(a) General. The Contractor shall be responsible for information technology (IT) security, based on Department of State (DOS) risk assessments, for all systems connected to a Department of State (DOS) network or operated by the Contractor for DOS, regardless of location. This clause is applicable to all or any part of the contract that includes information technology resources or services in which the Contractor has physical or electronic access to DOS's information that directly supports the mission of DOS. The term "information technology", as used in this clause, means any equipment, including telecommunications equipment, that is used in the automatic acquisition, storage, manipulation, management, movement, control, display, switching, interchange, transmission, or reception of data or information. This includes both major applications and general support systems as defined by OMB Circular A–130. Examples of tasks that require security provisions include:

(1) Hosting of DOS e-Government sites or other IT operations.

(2) Acquisition, transmission or analysis of data owned by DOS with significant replacement cost should the Contractor's copy be corrupted; and

(3) Access to DOS general support systems/major applications at a level beyond that granted by the general public, e.g., bypassing a firewall.

(b) IT Security Plan. The Contractor shall develop, provide, implement, and maintain an IT Security Plan. This plan shall describe the processes and procedures that will be followed to ensure appropriate security of IT resources that are developed, processed, or used under this contract. The plan shall describe those parts of the contract to which this clause applies. The Contractor's IT Security Plan shall comply

with applicable Federal laws that include, but are not limited to, 40 U.S.C. 11331, the Federal Information Security Management Act (FISMA) of 2002, and the E-Government Act of 2002. The plan shall meet IT security requirements in accordance with Federal and DOS policies and procedures, as they may be amended from time to time during the term of this contract that include, but are not limited to:

(1) OMB Circular A–130, Management of Federal Information Resources, Appendix III, Security of Federal Automated Information Resources.

(2) National Institute of Standards and Technology (NIST) Guidelines (see NIST Special Publication 800–37, Guide for the Security Certification and Accreditation of Federal Information Technology Systems (http://csrc.nist.gov/publications/nistpubs/800-37/SP800–37-final.pdf)); and

(3) Department of State information security sections of the Foreign Affairs Manual (FAM) and Foreign Affairs Handbook (FAH) (http://foia.state.gov/Regs/Search.asp), specifically:

(i) 12 FAM 230, Personnel Security.

(ii) 12 FAM 500, Information Security (sections 540, 570, and 590);

(iii) 12 FAM 600, Information Security Technology (section 620, and portions of 650);

(iv) 5 FAM 1060, Information Assurance Management; and

(v) 5 FAH 11, Information Assurance Handbook.

(c) Submittal of IT Security Plan. Within 30 days after contract award, the Contractor shall submit the IT Security Plan to the Contracting Officer and Contracting Officer's Representative (COR) for acceptance. This plan shall be consistent with and further detail the approach contained in the contractor's proposal or sealed bid that resulted in the award of this contract and in compliance with the requirements stated in this clause. The plan, as accepted by the Contracting Officer and COR, shall be incorporated into the contract as a compliance document. The Contractor shall comply with the accepted plan.

(d) Accreditation. Within six (6) months after contract award, the Contractor shall submit written proof of IT security accreditation for acceptance by the Contracting Officer. Such written proof may be furnished either by the Contractor or by a third party. Accreditation must be in accordance with NIST Special Publication 800–37. This accreditation will include a final security plan, risk assessment, security test and evaluation, and disaster recovery plan/continuity of operations plan. This accreditation, when accepted by the Contracting Officer, shall be incorporated into the contract as a compliance document, and shall include a final security plan, a risk assessment, security test and evaluation, and disaster

recovery/continuity of operations plan. The Contractor shall comply with the accepted accreditation documentation.

(e) Annual verification. On an annual basis, the Contractor shall submit verification to the Contracting Officer that the IT Security Plan remains valid.

(f) Warning notices. The Contractor shall ensure that the following banners are displayed on all DOS systems (both public and private) operated by the Contractor prior to allowing anyone access to the system:

Government Warning

WARNINGWARNING**WARNING**

Unauthorized access is a violation of U.S. law and Department of State policy and may result in criminal or administrative penalties. Users shall not access other users' or system files without proper authority. Absence of access controls IS NOT authorization for access! DOS information systems and related equipment are intended for communication, transmission, processing and storage of U.S. Government information. These systems and equipment are subject to monitoring by law enforcement and authorized Department officials. Monitoring may result in the acquisition, recording, and analysis of all data being communicated, transmitted, processed or stored in this system by law enforcement and authorized Department officials. Use of this system constitutes consent to such monitoring.

WARNINGWARNING**WARNING**

(g) Privacy Act notification. The Contractor shall ensure that the following banner is displayed on all DOS systems that contain Privacy Act information operated by the Contractor prior to allowing anyone access to the system:

This system contains information protected under the provisions of the Privacy Act of 1974 (Pub. L. 93–579). Any privacy information displayed on the screen or printed shall be protected from unauthorized disclosure. Employees who violate privacy safeguards may be subject to disciplinary actions, a fine of up to $5,000, or both.

(h) Privileged or limited privileged access. Contractor personnel requiring privileged access or limited privileged access to systems operated by the Contractor for DOS or interconnected to a DOS network shall adhere to the specific contract security requirements contained within this contract and/or the Contract Security Classification Specification (DD Form 254).

(i) Training. The Contractor shall ensure that its employees performing under this contract receive annual IT security training in accordance with OMB circular A–130, FISMA, and NIST requirements, as they may be amended from time to time during the term of this contract, with a specific emphasis on rules of behavior.

(j) Government access. The Contractor shall afford the Government access to the Contractor's and subcontractor's facilities, installations, operations, documentation, databases and personnel used in performance of the contract. Access shall be provided to the extent required to carry out a program of IT inspection (to include vulnerability testing), investigation and audit to safeguard against threats and hazards to the integrity, availability and confidentiality of DOS data or to the function of information technology systems operated on behalf of DOS, and to preserve evidence of computer crime.

(k) Subcontracts. The Contractor shall incorporate the substance of this clause in all subcontracts that meet the conditions in paragraph (a) of this clause.

(l) Notification regarding employees. The Contractor shall immediately notify the Contracting Officer when an employee either begins or terminates employment when that employee has access to DOS information systems or data.

(m) Termination. Failure on the part of the Contractor to comply with the terms of this clause may result in termination of this contract.

(End of clause)

DOSAR 652.215-70, Examination of Records

As prescribed in 615.209-70, insert the following clause.

EXAMINATION OF RECORDS

(a) With respect to matters related to this contract or a subcontract hereunder, the Department of State Office of the Inspector General, or an authorized representative, shall have upon request:

(1) Complete, prompt, and free access to all Contractor and Subcontractor files (in any format), documents, records, data, premises, and employees, except as limited by law; and

(2) The right to interview any current Contractor and Subcontractor personnel, individually and directly, with respect to such matters.

(b) This clause may not be construed to require the contractor or any subcontractor to create or maintain any record that the contractor or subcontractor does not maintain in the ordinary course of business or pursuant to a provision of law.

(c) The Contractor shall insert a clause containing all the terms of this clause, including this paragraph (c), in all subcontracts under this contract other than acquisitions described in Federal Acquisition Regulation 15.209(b)(1).

(End of clause)

SECTION 3 - SOLICITATION PROVISIONS

I. FAR 52.252-1 -- Solicitation Provisions Incorporated by Reference (Feb 1998)

This solicitation incorporates one or more solicitation provisions by reference, with the same force and effect as if they were given in full text. Upon request, the Contracting Officer will make their full text available. The offeror is cautioned that the listed provisions may include blocks that must be completed by the offeror and submitted with its quotation or offer. In lieu of submitting the full text of those provisions, the offeror may identify the provision by paragraph identifier and provide the appropriate information with its quotation or offer. Also, the full text of a solicitation provision may be accessed electronically at this/these address(es):

FAR and DOSAR clauses may be accessed at: https://acquisition.gov

NUMBER	TITLE	DATE
52.203-18	Prohibition on Contracting with Entities that Require Certain Internal Confidentiality Agreements or Statements—Representation	Jan-2017
52.204-7	System for Award Management—Registration	Nov.2025
52.214-34	Submission of Offers in the English Language	Apr 1991

II. Applicable Solicitation Provisions Provided in Full-Text

FAR 52.212-1 Instructions to Offerors-Commercial Items.

As prescribed in 12.301(b)(1), insert the following provision:

INSTRUCTIONS TO OFFERORS—COMMERCIAL PRODUCTS AND COMMERCIAL SERVICES (NOV 2025)

(a) Submission of offers. Submit signed and dated offers to the office specified in this solicitation at or before the exact time specified in this solicitation. As a minimum, offers shall include—

(1) The solicitation number;

(2) The name, address, telephone number of the Offeror;

(3) The Offeror's Unique Entity Identifier (UEI) and, if applicable, Electronic Funds Transfer (EFT) indicator;

(4) Information necessary to evaluate the factors contained in the provision at 52.212-2 or as described in the solicitation;

(5) Responses to provisions that require Offeror completion of information, representations, and certifications (other than those collected via the System for Award Management (SAM)); and

(6) A statement specifying the extent of agreement with all terms, conditions, and provisions included in the solicitation and any solicitation amendments.

(b) Period for acceptance of offers. The Offeror agrees to hold the prices in its offer firm for 90 calendar days from the date specified for receipt of offers, unless another time period is specified in an addendum to the solicitation.

(c) Late submissions, modifications, revisions, and withdrawals of offers.

(1) Offerors are responsible for submitting offers and any modifications or revisions to the Government office designated in the solicitation by the time specified in the solicitation.

(2) Any offer, modification, or revision received after the time specified for receipt of offers is "late" and will not be considered unless it is received before award is made and the Contracting Officer determines that accepting the late offer would not unduly delay the acquisition. However, a late modification of an otherwise successful offer that makes its terms more favorable to the Government will be considered at any time it is received and may be accepted.

(3) If an emergency or unanticipated event interrupts normal Government processes so that offers cannot be received at the Government office designated for receipt of offers by the exact time specified in the solicitation, and urgent Government requirements preclude amendment of the solicitation or other notice of an extension of the closing date, the time specified for receipt of offers will be deemed to be extended to the same time of day specified in the solicitation on the first work day on which normal Government processes resume.

(4) Offerors may withdraw their offers by written notice to the Government received at any time before award.

(d) Contract award (not applicable to Invitation for Bids). The Government intends to evaluate offers and award a contract without discussions with Offerors. Therefore, the Offeror's initial offer should contain the Offeror's best terms. However, the Government reserves the right to conduct discussions, if necessary. The Government may reject any or all offers if such action is in the public interest, accept other than the lowest offer, and waive informalities and minor irregularities in offers received.

(e) Debriefings. If a post award debriefing is given to requesting Offerors, the Government will disclose the following information, if applicable:

(1) The agency's evaluation of the significant weak or deficient factors in the debriefed Offeror's offer.

(2) The overall evaluated cost or price and technical rating of the successful Offeror and the debriefed Offeror and past performance information on the debriefed Offeror.

(3) The overall ranking of all Offerors when any ranking was developed by the agency during source selection.

(4) A summary of the rationale for award.

(5) For acquisitions of commercial products, the make and model of the product to be delivered by the successful Offeror.

(6) Reasonable responses to relevant questions posed by the debriefed Offeror as to whether the agency followed source-selection procedures set forth in the solicitation, applicable regulations, and other applicable authorities.

(End of provision)

FAR 52.225-17 -- Evaluation of Foreign Currency Offers

As prescribed in 25.1002-2, insert the following provision:

EVALUATION OF FOREIGN CURRENCY OFFERS (FEB 2000)

If the Government receives offers in more than one currency, the Government will evaluate offers by converting the foreign currency to United States currency using *[Contracting Officer to insert source of rate]* in effect as follows:

(a) For acquisitions conducted using sealed bidding procedures, on the date of bid opening.
(b) For acquisitions conducted using negotiation procedures-
(1) On the date specified for receipt of offers, if award is based on initial offers; otherwise
(2) On the date specified for receipt of proposal revisions.

(End of provision)

III. QUESTIONS REGARDING THIS SOLICITATION

Questions pertaining to this solicitation, if any, must be emailed to Arizak@state.gov and BogotaINLSolicitation@state.gov **no later than 04:00 pm local (Bogota, Colombia) time on June 19, 2026** Questions received after this date and time may not be answered prior to the solicitation closing. All emails must include the following subject line: **"PR15667572 - Questions_Your Company name".**

WARNING: Questions submitted without the required subject line or that are not sent to both email addresses may not be considered / answered.

IV. SUBMISSION OF QUOTATIONS

Quotations must be submitted via email to Arizak@state.gov **AND** BogotaINLSolicitation@state.gov . **Quotations must be received by the Government, at the before-mentioned email addresses, no later than 04:00 pm local (Bogota, Colombia) time on July 10, 2026**. Quotations received after this exact date and time will not be considered for award. No other method of quotation submission is acceptable. Quotations received through other methods will not be considered for award. Include the following subject line on all emails transmitting quotations: "**PR15667572 - Quotation_Your Company Name".**

WARNING: Quotations submitted without the required subject line or that are not sent to both email addresses may not be considered for award.

If your company's quotation (electronic mail) size exceeds 20 Mb, you must send the offer in separate mails. For example:

- PR15667572 - Quotation_Your Company Name (1 of 2)

- PR15667572 - Quotation_Your Company Name (2 of 2)
- Please do not send your offer in compressed file formats (rar, .zip) nor links to shared folders.

V. QUOTE PREPARATION INSTRUCTIONS

To be considered for award, each quote must include:

(a) Completed SF-1449 form (attached) in blocks 17a, 17b, 30a and 30b.

(b) Completed **Price Schedule (Attachment A)**. (Request the excel file to Procurement Agent Arizak@state.gov to obtain the file and submit along with the quotation/offer package - submit the excel file)

(c) Completed National Defense authorization (**NDAA-889**) (Request the pdf template to Arizak@state.gov to obtain the file and submit along with the quotation/offer package)

(d) Include a **statement specifying the extent of agreement with all terms, conditions, and provisions included in the solicitation**. Offers that fail to furnish required representations or information or reject the terms and conditions of the solicitation may be excluded from award consideration.

(e) **Representation and Certifications**: Complete, sign and submit all Representations and Certifications included in **Section 5** of this document (including the ORGANIZATIONAL CONFLICT OF INTEREST CERTIFICATION AND DISCLOSURE)

(f) **Product(s) / Service (s) Description**. The Contracting Officer will evaluate products based on information furnished by the offeror or identified in the quotation and reasonably available to the Contracting Officer. The Contracting Officer is not responsible for locating or obtaining any information not identified in the quotation. Include a technical description of the items being offered in sufficient detail to evaluate compliance with the requirements in the solicitation. This may include product literature, or other documents, if necessary.

(g) **Evidence** that the quoter can provide the necessary personnel, equipment, and financial resources needed to perform the work.

(h) The quoter shall address its plan to obtain all **licenses and permits required** by local law (see DOSAR 652.242-73 in Section 2). If offeror already possesses the locally required licenses and permits, a copy shall be provided.

(i) If insurance is required by the solicitation, a copy of the Certificate of Insurance(s), or a statement that the Contractor will get the **required insurance**, and the name of the insurance provider to be used.

(j) Provide evidence of **active SAM.gov registration.**

(k) Once you send your offer/quote to the designated Procurement Agent (Arizak@state.gov), make sure you receive a **confirmation of receipt** via electronic mail. Otherwise, your offer will not be considered for the current procurement action.

(l) All Quotes must be valid for **90 days** from the closing date for this solicitation. No exceptions or qualifications. New equipment ONLY, NO grey market or refurbished products. Items must be in original packaging, never used, and not altered in any way.

(m)"**DBA Insurance**" – Once the purchase order has been awarded to the winning vendor, the vendor must acquire the DBA insurance and submit the invoice to the designated procurement agent for total reimbursement of the cost. For local vendors, the source of the exchange rate value will be selected using the U.S. Embassy Bogota exchange rate (https://cgfsice.azurewebsites.us/) and the date of the DBA invoice. If required, a modification to the order will be processed.

SECTION 4 - EVALUATION FACTORS

Evaluation shall be made based on the extent to which an offer meets the technical specifications within each unique line item of the requirement. Award will be made based on a Lowest Price Technically Acceptable (LPTA) methodology.

Acquisition Method: The Government is conducting this acquisition using simplified procedures in Part 12 of the Federal Acquisition Regulation (FAR).

- Bear in mind items that proceed from China. Can't be purchased. Please see FAR 52.240-91 and 52.240-90.
- The Government reserves the right to reject quotations that are incomplete, non-compliant with the terms of this solicitation, or that are unreasonably high in price.
- For evaluation purposes, the price will be determined by multiplying the offered prices times the quantities stated in the schedule, and arriving at a grand total, including all options, if any.
- The Government will determine quoter responsibility by analyzing whether the apparent successful quoter complies with the standards of FAR 9.104.
- Unless an exception in FAR 4.203 System for Award Management applies, a quoter must be registered in SAM (www.SAM.gov) to be eligible for award. If the quoter does not become registered in the SAM database in the time prescribed by the Contracting Officer, the Contracting Officer will proceed to award the next otherwise successful registered quoter.
- Compliance with all the specifications listed in this document.
- The Government shall pay the contractor as full compensation for all work or services required, performed, and accepted. 30 days after receiving the invoice. No advance payments are allowed.
- The Government will evaluate the proposed technical specifications, delivery time, and warranty, and will consider past performance.

- Warranty shall be effective in Colombia, if requested, shall be covered by the contractor during the term of the same.
- The Government will only consider for award those companies that the Government determines have a high likelihood of satisfactorily completing the required items based on the proposal.
- Warranties periods and coverage as requested for each item.
- Vendor's experience in previous related requests/projects (the requester may request evidence).
- Proposed delivery timeframe.
- Award will be made to the lowest price, technically acceptable, responsible quoter.
- The Government reserves the right to reject quotations that are incomplete, non-compliant with the terms of this solicitation, or that are unreasonably high in price.
- The Government will only consider for award those companies that the Government determines have a high likelihood of satisfactorily completing the required items based on the proposal.

SECTION 5 - REPRESENTATIONS AND CERTIFICATIONS

52.203-11 Certification and Disclosure Regarding Payments to Influence Certain Federal Transactions.

As prescribed in 3.808(a), insert the following provision:

CERTIFICATION AND DISCLOSURE REGARDING PAYMENTS TO INFLUENCE CERTAIN FEDERAL TRANSACTIONS (SEP 2024)

(a) *Definitions*. As used in this provision-"Lobbying contact" has the meaning provided at 2 U.S.C. 1602(8). The terms "agency," "influencing or attempting to influence," "officer or employee of an agency," "person," "reasonable compensation," and "regularly employed" are defined in the FAR clause of this solicitation entitled "Limitation on Payments to Influence Certain Federal Transactions" (52.203-12).

(b) *Prohibition*. The prohibition and exceptions contained in the FAR clause of this solicitation entitled "Limitation on Payments to Influence Certain Federal Transactions" (52.204-13) are hereby incorporated by reference in this provision.

(c) *Certification*. The offeror, by signing its offer, hereby certifies to the best of its knowledge and belief that no Federal appropriated funds have been paid or will be paid to any person for influencing or attempting to influence an officer or employee of any agency, a Member of Congress, an officer or employee of Congress, or an employee of a Member of Congress on its behalf in connection with the awarding of this contract.

(d) *Disclosure*. If any registrants under the Lobbying Disclosure Act of 1995 have made a lobbying contact on behalf of the offeror with respect to this contract, the offeror shall complete and submit, with its offer, OMB Standard Form LLL, Disclosure of Lobbying Activities, to provide the name of the registrants. The offeror need not report regularly employed officers or employees of the offeror to whom payments of reasonable compensation were made.

(e) *Penalties*. Submission of this certification and disclosure is a prerequisite for making or entering into this contract imposed by 31 U.S.C. 1352. Any person who makes an expenditure prohibited under this provision or who fails to file or amend the disclosure required to be filed or amended by this provision, shall be subject to civil penalties as provided in 31 U.S.C. 1352. An imposition of a civil penalty does not prevent the Government from seeking any other remedy that may be applicable.

(End of provision)

52.222-18 Certification Regarding Knowledge of Child Labor for Listed End Products.
As prescribed in 22.1502-2(a)(1), insert the following provision:

CERTIFICATION REGARDING KNOWLEDGE OF CHILD LABOR FOR LISTED END PRODUCTS (FEB 2021)

(a) *Definition*.

Forced or indentured child labor means all work or service-

(1) Exacted from any person under the age of 18 under the menace of any penalty for its nonperformance and for which the worker does not offer himself voluntarily; or

(2) Performed by any person under the age of 18 pursuant to a contract the enforcement of which can be accomplished by process or penalties.

(b) *Listed end products*. The following end product(s) being acquired under this solicitation is (are) included in the List of Products Requiring Contractor Certification as to Forced or Indentured Child Labor, identified by their country of origin. There is a reasonable basis to believe that listed end products from the listed countries of origin may have been mined, produced, or manufactured by forced or indentured child labor.

Listed End Product	Listed Countries of Origin

(c) *Certification*. The Government will not make award to an offeror unless the offeror, by checking the appropriate block, certifies to either paragraph (c)(1) or paragraph (c)(2) of this provision.

☐ (1) The offeror will not supply any end product listed in paragraph (b) of this provision that was mined, produced, or manufactured in a corresponding country as listed for that end product.

☐ (2) The offeror may supply an end product listed in paragraph (b) of this provision that was mined, produced, or manufactured in the corresponding country as listed for that product. The offeror certifies that it has made a good faith effort to determine whether forced or indentured child labor was used to mine, produce, or manufacture such end product. On the basis of those efforts, the offeror certifies that it is not aware of any such use of child labor.

(End of provision)

NOTE: This acquisition is subject to a waiver/exemption, therefore 52.240-90 (c) Covered telecommunications equipment or services representations do not apply.

52.240-90 Security Prohibitions and Exclusions Representations and Certifications

As prescribed in 40.205(a), insert the following provision:

SECURITY PROHIBITIONS AND EXCLUSIONS REPRESENTATIONS AND CERTIFICATIONS (NOV-2025)

(a) *Definitions.* As used in this provision-—

Backhaul, covered article, covered telecommunications equipment or services, critical technology, FASCSA order, Intelligence community, interconnection arrangements, national security system, roaming, sensitive compartmented information, sensitive compartmented information system, source,

and substantial or essential component have the meanings provided in the clause 52.240-91, Security Prohibitions and Exclusions.

Business operations means engaging in commerce in any form, including by acquiring, developing, maintaining, owning, selling, possessing, leasing, or operating equipment, facilities, personnel, products, services, personal property, real property, or any other apparatus of business or commerce.

Marginalized populations of Sudan means—

(1) Adversely affected groups in regions authorized to receive assistance under section 8(c) of the Darfur Peace and Accountability Act (Pub. L. 109-344) (50 U.S.C. 1701 note); and

(2) Marginalized areas in Northern Sudan described in section 4(9) of such Act.

Restricted business operations means business operations in Sudan that include power production activities, mineral extraction activities, oil-related activities, or the production of military equipment, as those terms are defined in the Sudan Accountability and Divestment Act of 2007 (Pub. L. 110-174). Restricted business operations do not include business operations that the person (as that term is defined in Section 2 of the Sudan Accountability and Divestment Act of 2007) conducting the business can demonstrate—

(1) Are conducted under contract directly and exclusively with the regional government of southern Sudan;

(2) Are conducted under specific authorization from the Office of Foreign Assets Control in the Department of the Treasury, or are expressly exempted under Federal law from the requirement to be conducted under such authorization;

(3) Consist of providing goods or services to marginalized populations of Sudan;

(4) Consist of providing goods or services to an internationally recognized peacekeeping force or humanitarian organization;

(5) Consist of providing goods or services that are used only to promote health or education; or

(6) Have been voluntarily suspended.

Sensitive technology—

(1) Means hardware, software, telecommunications equipment, or any other technology that is to be used specifically—

(i) To restrict the free flow of unbiased information in Iran; or

(ii) To disrupt, monitor, or otherwise restrict speech of the people of Iran; and

(2) Does not include information or informational materials the export of which the President does not have the authority to regulate or prohibit pursuant to section 203(b)(3) of the International Emergency Economic Powers Act (50 U.S.C. 1702(b)(3)).

(b) *Procedures*.

(1) *Covered telecommunications and video surveillance*. The Offeror shall review the list of excluded parties in the System for Award Management (SAM) at https://www.sam.gov for entities excluded from receiving federal awards for "covered telecommunications equipment or services."

(2) *FASCSA Orders*.

(i) The Offeror shall search in SAM for the phrase "FASCSA order" for any covered article, or any products or services produced or provided by a source, if there is an applicable FASCSA order described in paragraph (e) of FAR 52.240-91, Security Prohibitions and Exclusions.

(ii) The Offeror shall review the solicitation for any FASCSA orders that are not in SAM but are effective and apply to the solicitation and resultant contract (see FAR 40.204-1(c)(2)).

(iii) FASCSA orders issued after the date of solicitation do not apply unless added by an amendment to the solicitation.

(c) *Covered telecommunications equipment or services representations*. By submission of its offer, the Offeror represents that, after conducting a reasonable inquiry (that looks at any information in the Offeror's possession but does not need to include an internal or third-party audit)—

(1) It will not provide covered telecommunications equipment or services to the Government in the performance of any contract, subcontract or other contractual instrument resulting from this solicitation, except as waived by the solicitation, or as disclosed in paragraph (g); and

(2) It does not use covered telecommunications equipment or services, or use any equipment, system, or service that uses covered telecommunications equipment or services, except as waived by the solicitation, or as disclosed in paragraph (g).

(d) *FASCSA Representation*. By submission of this offer, the offeror represents that it has conducted a reasonable inquiry, and that the offeror does not propose to provide or use in response to this solicitation any covered article, or any products or services produced or provided by a source, if the covered article or the source is prohibited by an applicable FASCSA order in effect on the date the solicitation was issued, except as waived by the solicitation, or as disclosed in paragraph (g). A reasonable inquiry will look at any information in the offeror's possession but does not need to include an internal or third-party audit.

(e) *Sudan certification*. By submission of its offer, the offeror certifies, after conducting a reasonable inquiry (that looks at any information in the offeror's possession but does not need to include an internal or third-party audit), that the offeror does not conduct any restricted business operations in Sudan.

(f) *Iran Representation and Certifications*.

(1) Except as provided in paragraph (f)(2) of this provision or if a waiver has been granted in accordance with FAR 40.203-3, the offeror, after conducting a reasonable inquiry (that looks at any information in the offeror's possession but does not need to include an internal or third-party audit), by submission of its offer—

(i) Represents, to the best of its knowledge and belief, that the offeror does not export any sensitive technology to the government of Iran or any entities or individuals owned or controlled by, or acting on behalf or at the direction of, the government of Iran;

(ii) Certifies that the offeror, or any person (as defined at section 15 of the Iran Sanctions Act of 1996, Pub. L. 104-172, 50 U.S.C. 1701 note) owned or controlled by the offeror, does not engage in any

activities for which sanctions may be imposed under section 5 of the Act. These sanctioned activities are in the areas of development of the petroleum resources of Iran, production of refined petroleum products in Iran, sale and provision of refined petroleum products to Iran, and contributing to Iran's ability to acquire or develop certain weapons or technologies; and

(iii) Certifies that the offeror, and any person owned or controlled by the offeror, does not knowingly engage in any transaction that exceeds $15,000 with Iran's Revolutionary Guard Corps or any of its officials, agents, or affiliates, the property and interests in property of which are blocked pursuant to the International Emergency Economic Powers Act (50 U.S.C. 1701 et seq.) (see OFAC's Specially Designated Nationals and Blocked Persons List at https://www.treasury.gov/resource-center/sanctions/SDN-List/Pages/default.aspx)

(2) Exception for trade agreements. The representation and certification requirements of paragraph (f)(1) of this provision do not apply if—

(i) This solicitation includes a trade agreements notice or certification (e.g., 52.225-6, Trade Agreements Certificate); and

(ii) The offeror has certified that all the offered products to be supplied are designated country end products or designated country construction material.

(iii) The offeror shall email questions concerning sensitive technology to the Department of State at CISADA106@state.gov.

(g) *Disclosure*.

(1) If the Offeror is not able to represent compliance with the prohibitions in paragraphs (c) or (d), then the Offeror shall disclose within 72 hours to the contracting office identified in paragraph (g)(2) the following information for each product or service not compliant:

(i) Contract number and order number, if applicable;

(ii) Identification of whether this disclosure relates to paragraph (c) on covered telecommunication equipment or services, or to paragraph (d) on FASCSA orders;

(iii) A description of the products or services that the Contractor identifies or has reason to suspect is prohibited (include brand; model number, such as the original equipment manufacturer (OEM) number, manufacturer part number, or wholesaler number; and item description, as applicable);

(iv) The entity that produced the product or service (include entity name, unique entity identifier, Contractor and Government Entity (CAGE) code, facilities responsible for design, fabrication, assembly, packaging, and test of the product, and whether the entity was the OEM or a distributor (provide manufacturer codes and distributor codes used for the product));

(v) Description of the functionality of the product or service and how that functionality impacts the risk to the product or service;

(vi) An explanation of any factors relevant to determining if the product or service should be permitted by an applicable exception, exemption, or waiver (if the offeror would like the Government to consider a waiver);

(vii) Whether alternative products or services are available that would be compliant with the prohibition;

(viii) If the product or service is related to item maintenance, include the following information on the item being maintained:

(A) Brand;

(B) Model number, OEM number, manufacturer part number, or wholesaler number; and

(C) Item description, as applicable.

(ix) Any readily available information about mitigation actions undertaken or recommended.

(2) If a disclosure is required to be submitted to a contracting office, the offeror shall submit the disclosure as follows:

(i) If a Department of Defense contracting office, the offeror shall submit the disclosure to the website at https://dibnet.dod.mil.

(ii) For all other contracting offices, the Offeror shall submit the disclosure to the Contracting Officer.

(3) If the disclosure provided does not contain any of the information required by paragraph (1), and the Offeror later discovers new information that is required by paragraph (1), then the Offeror shall submit a subsequent disclosure within 72 hours of discovering the new information.

(h) *Executive agency review of disclosures*. The Contracting Officer will review disclosures provided in paragraph (g) to determine if any applicable waiver may be sought. The Contracting Officer may choose not to pursue a waiver and may instead make an award to an Offeror that does not require a waiver.

(End of provision)

Subpart 9.5 for ORGANIZATIONAL CONFLICT OF INTEREST CERTIFICATION AND DISCLOSURE

(a) The offeror certifies, to the best of its knowledge and belief, that it [ ] is [ ] is not aware of any information bearing on the existence of any potential organizational conflict of interest, as defined in FAR 9.501, which relates to the work to be performed pursuant to this solicitation. As used herein, "offeror" means the proposer or any of its affiliates or proposed consultants or subcontractors of any tier.

(b) If the offeror is aware of any such information, the offeror shall provide a disclosure statement as part of its proposal which describes in a concise manner all relevant facts concerning any past, present, or planned interest (financial, contractual, organizational, or otherwise) relating to the work to be performed hereunder and bearing on whether the offeror may have a potential organizational conflict of interest with respect to (1) being able to render impartial, technically sound, and objective assistance or advice, or (2) being given an unfair competitive advantage. The offeror may also provide relevant facts that show how its organizational structure and/or management systems limit its knowledge of possible organizational conflicts of interest relating to other divisions or sections of the organization and how that structure or system would avoid or mitigate such organizational conflicts.

(c) The Government will review the statement submitted and may require additional relevant information from the offeror. All such information, and any other relevant information known to the Government, will be used to determine whether an award to the offeror may create an organizational conflict of interest. If an organizational conflict of interest is found to exist, the Government may

(1) impose appropriate conditions which avoid such conflict,

(2) disqualify the offeror, or
(3) determine that it is otherwise in the best interest of the United States to contract with the offeror by including appropriate conditions mitigating such conflict in the resultant contract.

(d) Offerors should refer to FAR Subpart 9.5 for policies and procedures for avoiding, neutralizing, or mitigating organizational conflicts of interest.

(e) If the Contracting Officer determines that a potential conflict exists, the prospective Contractor shall not receive an award unless the conflict can be avoided or otherwise resolved through the inclusion of a special contract clause or other appropriate means. The terms of any special clause are subject to negotiation.

CERTIFICATION
I hereby certify that the responses to the above representations, certifications, and other statements are accurate and complete.

Signature: _____

Your Company name: _____

Typed Name: _____

Title: _____

Date: _____

STATEMENT OF WORK (SOW)

1 BACKGROUND

Reserved

2 TECHNICAL SPECIFICATIONS

	Item	Description/Specifications	Qty
2.1	Mobile marksmanship training simulator // Simulador móvil de entrenamiento de tiro	a. MMTS LaserShot or equal that meets or exceeds the following specifications: b. Multi-functional firearms simulator designed to address both basic and advanced firearms training requirements for both small arms and crew-served weapon systems. c. Plug-and- play solution that is designed specifically for the training needs of military and law enforcement professionals. d. Designed to be placed on the floor. e. Scalable for training in multiples of up to four lanes per screen and networked together for higher training throughput. f. Courseware can be customized to meet specific training requirements with titles that specialize in individual marksmanship training, reflexive fire, use-of- force, immersive collective scenarios, mission rehearsal, and firearms skill building. g. The operator station components can be positioned out of the way to allow shooters more floor space in front of the screen, while all components integrate within the system hardware as a single unit (see picture 1 for reference). h. System hardware (projector, laser-hit detection camera, computers, speakers, networking hardware, surge protection) are mounted in fixed positions inside a rugged portable rolling rack-case for easy setup and operation. Hardware components listed as follows: - 1 (one) Short Throw Projector; Aspect Ratio 16:10; Native Resolution 1920 x 1200 (WUXGA); Brightness 5000 Lumens; Contrast 2000:1; Lens Shift V:0–60%, H: ±10%; Corner Correction built in; Lens 1.8x manual zoom, manual focus.	1

		- 2 (two) Gaming Computer Intel NUC; processor Intel Core i7-1165G7; memory 2 x 8 GB DDR4; GPU RTX2060 + 6GB GDDR6; storage 512GB Optane H10; 2 x USB 4 ports via Type C/Thunderbolt™ (Front and back panel); 6 x USB 3.2 Gen 2 ports (2 front panel and 4 back panel); 1 x USB 3.2 port (via M.2 slot) (wireless keyboard & mouse for each computer, included) - 1 (one) Laser Hit Detection Camera, Optitrack Slim x13; Resolution 1280 x 1024; Max Frame rate (full resolution) 240 Hz; Types of Lasers: Visible / IR / Series 1 (IR-850nm) / Series 2; Number of IDs: 4 (Series 1) / 20 (Series 2); Power Port POE; Data Port GigE (with adjustable ball socket camera mount) - 1 (one) Surround Sound Speaker System. - 1 (one) Ruggedized Shockmount Case. - Networking equipment necessary for the operation of the simulator such as power over Ethernet switch, gigabit network switch and Ethernet cables, included. - 1 (one) Rack-mount surge protection against dangerous surges, spikes and line noise. 6 to 12 NEMA 5-15R outlets. - 1 (one) 25ft HDMI cable. - 1 (one) 22in Monitor, Resolution 1920 x 1080; Aspect Ratio 16:9; Refresh rate 60Hz; Connectivity: HDMI (v1.4) x2, VGA x 1 i. 1 (one) Projection creen included (see picture 2 for reference). Portable projection screen for displaying virtual targetry. Screen Dimensions (in) / (cm): 97” x 168” / 246cm x 426cm. Edgeless. Deployable and storable in protective case for easy transport. Components included: Screen Frame, Screen Leg Left and Right, Screen Surface Cover, Screen Surface, Handy Cranks. j. There must be compatibility between this item, the software of item 2.2 and the simulated recoil training devices of item 2.3. k. 1-year warranty covering at least hardware defects, component failure and parts/labor for repairs.	
2.2	Software package // Paquete de software	a. The package shall include software of the following characteristics: b. 1 (one) Judgment Training Software JTS software to challenge cognition through interactive simulated scenarios designed based on real-life exposure to emergent threats in the law enforcement and military communities. Training scenarios are presented with armed professionals that develop decision making and performance skills associated with use-of-force encounters.	1

		Player with Spanish scenario pack and remote viewer to conduct after-action review without interfering with the firing line. c. 1 (one) Preliminary Marksmanship Instruction, MIL software, designed for small arms development, sustainment, and qualification, while strictly adhering to the doctrines of all services. Warfighters practice grouping and advance to zeroing. When the warfighter achieves an optimum shot group, the zeroing process will walk them through adjusting physical sights on simulated d. 1 (one) Course of Fire software for enabling configuration and execution of doctrinal courses of fire and qualification tables, replicating traditional shooting range experience. e. 1 (one) Skill Drill software to improve timing, accuracy, and decision-making skills with lethal weapons through various training drills. Allows combatants to execute target acquisition exercises using laser inserts, simulated recoil weapons and inert trainers. Each drill features adjustable settings—including number of targets, face time, and speed—enabling instructors to tailor training sessions to individual skill levels from beginner to expert. f. 1 (one) Runningman software to provide moving, man-shaped targets to train engagement of lateral movers, improving target tracking, lead, and trigger control under time pressure. g. 1 (one) Practical Shooting software for practical shooting using scored hit zones (Alpha-Bravo-Charlie-Delta) to train realistic multi-target engagements, balancing speed and precision. h. 1 (one) Known Distance Range software with features such as responsive location of misses and hits indicator that displays instant shot placement without interrupting the sight picture, and visualization of point-of-aim and point-of-impact to help warfighters understand the relationship between weapon aim and bullet impact. Teaches shooters to determine relative target size by distance, make sight adjustments, experience wind and bullet drop effects, and practice accurate shot grouping. i. 1 (one) Steel Challenge software for time-based drills with standardized steel-type target arrays, designed to improve rapid target acquisition, transitions, and controlled, accurate shooting under time constraints. j. All software licensing shall be perpetual.	

		k. There must be compatibility between this item, the hardware of item 2.1 and the simulated recoil training devices of item 2.3.	
2.3	Kit of simulated recoil training devices and accessories // Equipo de dispositivos de entrenamiento con retroceso simulado y accesorios	a. The kit shall include: b. 4 (four) simulated recoil training PX4-reference: with pneumatic recoil kit (refillable system compatible with the CO2 refill station in section **2.3.f**) to simulate blowback whenever a virtual round is fired. Provides realism for virtual training. Infrared lasers are embedded in each weapon to interact with the simulator. c. 4 (four) simulated recoil training M4-reference: with pneumatic recoil. Barrel reservoirs can be filled with a CO2 adapter on a CO2 tank with siphon tube (refillable system compatible with the CO2 refill station in section **2.3.f**). Has true-to-life look, feel, and function to instill unforgettable muscle memory. d. 8 (eight) roundcount magazines, for simulated recoil training M4-reference: capable of adjustable round counts. When the number of shots fired equals the round setting, a bolt stop is actuated to lock the bolt to rear replicating the physical characteristics of an empty weapon and magazine. Each magazine replicates the weight and feels of a real, loaded magazine and feature true-to-life dimensions for seamless loading into tactical gear or duty belts for reload drills. e. 2 (two) counting magazine charging docks, quad. f. 2 (two) CO2 refill stations, adapter with stand. g. 2 (two) purge tools to safely and completely vent remaining pressurized gas. h. Cases as necessary for this kit. i. There must be compatibility between this item, the hardware of item 2.1 and the software of item 2.2. j. 1-year warranty covering at least hardware defects, component failure and parts/labor for repairs.	1
2.4	Installation, configuration and test service, and knowledge transfer // Servicio de instalación, configuración y pruebas, y transferencia de conocimiento	a. Get two technicians to fly down to Colombia-Cartagena (Tv. 52, Isla Manzanillo, International Coastguard School), to assist with new equipment and software installation, configuration, calibration and testing. Notice: the contractor shall be responsible for their technicians' logistics expenses such as accommodation, meals, medical insurance and transportation (both air and land). b. Installation shall include: - Hardware setup	1

		- Portable projection screen assembly - Simulator primary case setup - Connections setup - Simulated recoil training devices and accessories setup c. Configuration shall include: - Image alignment - Audio configuration - Network configuration - Software installation and configuration d. Calibration and testing shall include: - Camera calibration - Simulated recoil training devices tracking test - Full system operational test: running all software listed in section 2.2; all hardware component listed in section 2.1 operational; operator station functionality (instructor screen separate from trainee view); simulated recoil training device PX4 and M4-references tracking mode selected and confirmed; CO_2 recoil systems on all simulated recoil training device PX4 and M4-references; roundcount magazines — bolt-stop function at round depletion; CO_2 refill stations and purge tools operational. e. Knowledge transfer session shall include an on-site detailed explanation in Spanish of the following critical operational areas that end users need to be proficient in: - Hardware operation - Calibration procedures - Software/Courseware specific operation - Simulated recoil training devices operation - User-level maintenance - Basic troubleshooting f. For the knowledge transfer, the contractor shall ensure that at least one of the technicians selected to conduct this service is fully proficient in Spanish. g. Upon service completion, the contractor shall hand over the following documentation: - Simulator user manual - Individual software manuals - Individual simulated recoil training device manuals (PX4 and M4-references)	

		- Simulated recoil training devices interface/calibration user manual - Manufacturer manuals for all hardware components. - Warranty documentation specifying date of activation, duration and coverage. - Technical support contacts such as phone numbers and e-mails. h. The contractor shall ensure their technicians selected to conduct this service are expert, skilled and experienced in the simulator, hardware components, simulated recoil training devices and software provided. i. The contractor shall deliver the installation site in the same condition as found. Any damage caused to walls, paint, floors, ceilings, or surrounding elements during installation shall be repaired by the contractor at their cost. j. The contractor shall submit a final report (in Spanish) once completed this service including all the work conducted, photography record, and a class rooster form with the attendees to the knowledge transfer session.	
2.5	Shipping // Envío	a. Shipping Charges from Vendor to Delivery Location (INL Warehouse in Bogotá or to the Freight Forwarder GOLDBELT SECURITY in Miami)	1
2.6	Insurance // Seguro	a. Defense Base Act DBA, a type of insurance required for certain service contracts performed overseas, providing workers' compensation coverage. In this case, estimation is based on 5% of the total value of the item 2.4.	1

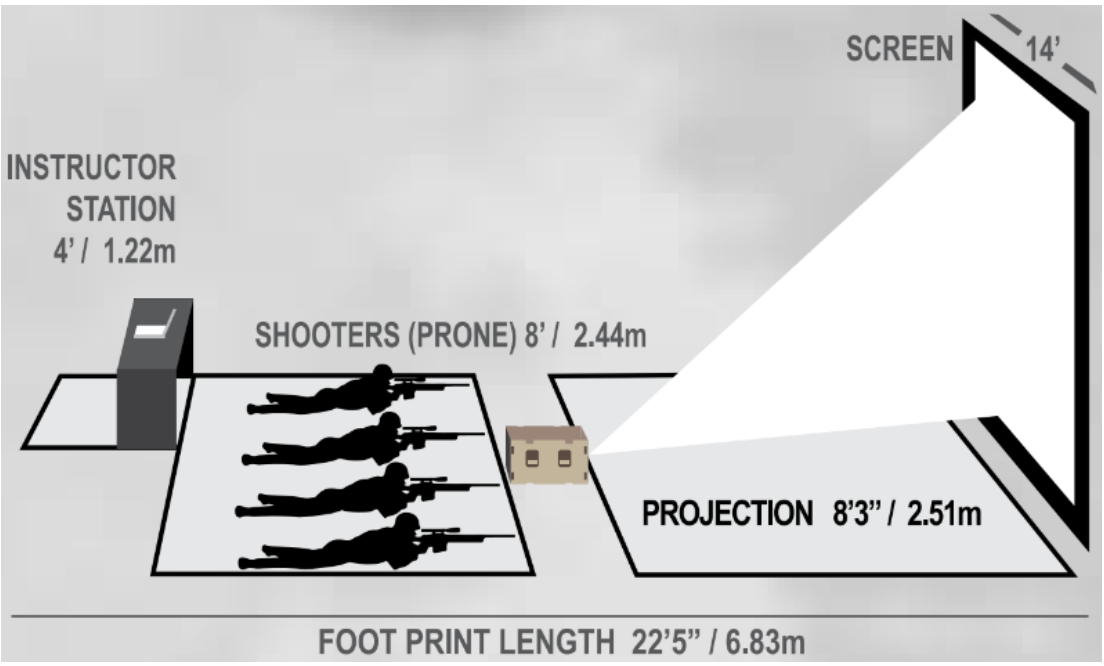

Picture 1. Hardware component setup (LaserShot example)

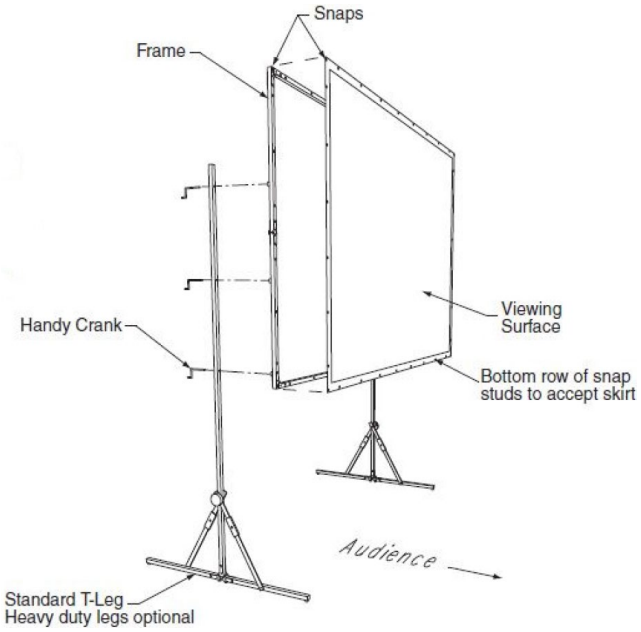

Picture 2: Projection screen assembly (LaserShot example)

Notice:

- Please propose manufacturers other than Chinese/Taiwanese for all requested items.
- The vendor's proposal shall indicate what the manufacturer/model/reference offered for each item requested is and the offered specifications versus each requested specification, in a chart. See example below:

Manufacturer: Dell / OptiPlex 5400 All-in-One

Requested Specifications	Vendor's Proposal
a. Display: 23.8-inch FHD (1920 x 1080), LED IPS or WVA, Anti-Glare, non-touch, narrow bezel, height and tilt adjustable stand.	a. Display: 23.8" FHD Non Touch (1920x1080), Anti-Glare, 65W CPU, FHD Camera, UMA, 160W Bronze PSU and height adjustable stand.
b. Color: black or gray.	b. Color: Black
c. Manufacturing year: 2022.	c. OptiPlex 5400 All-in-One
d. Processor: Launch Date: Q1'22 or later; Clock speed: 3.0GHz; Max Frequency: 4.66GHz; Cache: 18MB; Total Cores: 6; Total Threads: 12; For bussiness environment; OVERLOCKING option must be locked.	d. Processor: 12th Generation Intel Core i5-12600 (6 Cores/18MB/12T/3.3GHz to 4.8GHz/65W)
e. Hard drive: 512GB M.2 PCIe NVMe Solid State Drive.	e. Hard drive: M.2 512GB PCIe NVMe Class 35 Solid State Drive
f. Memory: 16GB (2x8GB), DDR4-2666MHz dual channel.	f. Memory: 16GB 2x8GB 2666MHz DDRa Memory + 16GB Intel Ooptane Memory
g. Graphic card: integrated HD.	g. Graphic card: Intel Integrated Graphics
h. Webcam 1080p FHD.	h. FHD Camera
i. Operating System: Windows 11 Pro 64bit Spanish.	Windows 11 Pro, English, French, Spanish
j. Optical USB mouse (same manufacturer than the AIO)	j. Dell Optical Mouse-Black

3 DELIVERY (SHIPPING AND HANDLING INSTRUCTIONS) AND PLACE OF PERFORMANCE

The Vendor shall deliver ALL contracted items (as per specifications of section 2 of this document) to INL Bogota-Colombia warehouse at Avenida Calle 22 # 68B – 75, Barrio Montevideo, Centro Empresarial CCL.

The installation, configuration and testing of the equipment as per section 2.4 shall be performed by the contractor at International Coastguard School ESCIG of the Colombian Navy COLNAV in Colombia-Cartagena, *Tv. 52, Isla Manzanillo*, once placed at end user's facilities (INL POC will notify it. *Movement from INL Warehouse to end user's facilities is reasonability of the end user.*). The contractor shall be responsible for their personnel's logistics expenses such as accommodation, meals, and transportation if any.

4 WARRANTY

All items shall be brand new (items remanufactured or manufactured with reused materials are NOT acceptable),

covered by manufacturer's warranty for each contracted item as per section 2 applicable in Colombia, and procured through a manufacturer approved distribution channel (if requested by the INL delegate, the contractor shall provide certificates to demonstrate the origin of the equipment delivered). The contractor shall use commercially reasonable efforts to correct any substantial nonconformity or manufacturing defect of the contracted items upon delivery and installation during their warranty period and be responsible for repairing them or providing replacement for others of the same or higher technical characteristics and deliver them to the INL warehouse free of charge. Warranty should cover at least hardware defects, component failure and parts/labor for repairs.

5 CUSTOMS CLEARANCE AND TAX EXEMPTIONS

The Contractor will not be reimbursed VAT or IVA under this contract by the U. S. Government. The prices set forth in this contract are excluded of all taxes and duties from which the U. S. Government is exempt by virtue of agreement between the U. S. Government and the Government of Colombia.

6 INSPECTION AND ACCEPTANCE

The final inspection and acceptance of ALL items shall be performed upon delivery by the INL delegate. All equipment/item delivered shall conform exactly to or exceed the technical specifications as per section 2.

The payment(s) to the Contractor shall be made following satisfactory inspection and acceptance of contracted items by the INL delegate **in Bogotá**. Payment process of contracted items **delivered to the Freight Forwarder GOLDBELT SECURITY in Miami will initiate only once those items arrive in Bogotá and are satisfactorily inspected and accepted by the INL delegate in Bogotá.** If the items or some item does not fulfill contracted technical specifications, INL shall return those items to vendor free of cost. The vendor shall evaluate and replace returned items with no transportation cost to INL.

INL will have 30 calendar days to inspect and accept all items upon delivery.

The designated representative of the INL Bogotá will be responsible for carrying out at least the following checks:

i. Verification of quantities of each contracted item and accessories included.
ii. Compliance with the contracted technical specifications
iii. Correct operation of contracted items once installed

6 PERIOD OF PERFORMANCE (PoP) or ESTIMATED DELIVERY DATE

The contractor shall deliver contracted items in no more than 40 calendar days after the award of the purchase order. Once delivered, end user will move those items from INL Warehouse to end user's facilities in no more than 14 days. Once placed at end user's facilities, the contractor will have 30 additional calendar days to perform the installation and configuration as per section 3. **If delivered to Freight Forwarder in Miami, there will be about 21 more days for shipping and customs processing. So, the max. PoP should be 105 days (see chart below).**

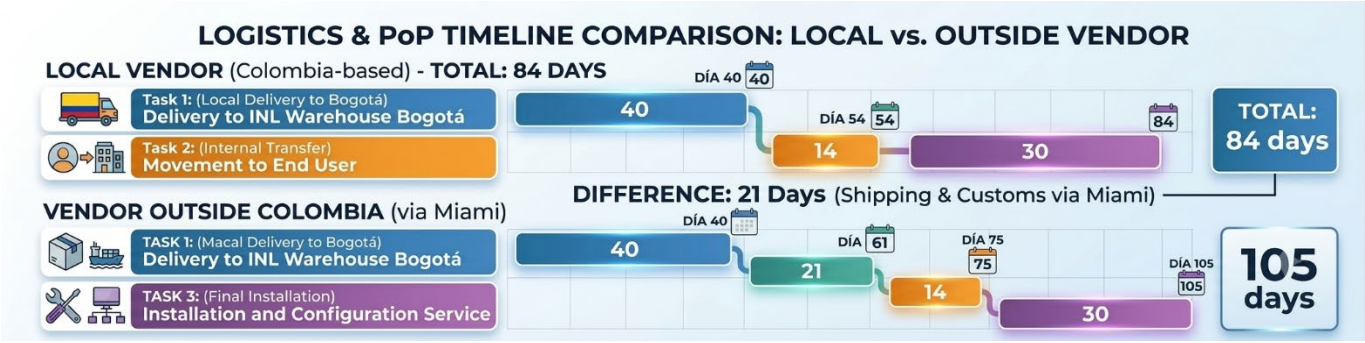

8 MEMBERS FOR THE TECHNICAL EVALUATION PANEL

Reserved

9 EVALUATION FACTORS

- The offeror shall submit a technical proposal that meets or exceeds the specifications as stated in section 2 of this document. This proposal shall be prepared in charts for each requested item (see example in section 2) listing each requested spec versus offeror's proposal. Product datasheets and pictures for each requested item shall be included as attachment.
- Warranties periods and coverage as requested for each item.
- Vendor's experience in previous related requests/projects (the requester may request evidence).
- Proposed delivery timeframe.
- Award will be made to the lowest price, technically acceptable, responsible quoter.
- The Government reserves the right to reject quotations that are incomplete, non-compliant with the terms of this solicitation, or that are unreasonably high in price.
- The Government will only consider for award those companies that the Government determines have a high likelihood of satisfactorily completing the required items based on the proposal.

End of SOW