US Army Corps
of Engineers®
NEW ORLEANS DISTRICT

FRESHWATER BAYOU WATERWAY
FRESHWATER BAYOU LOCK
NEW SHOPS BUILDING
VERMILION PARISH, LOUISIANA

SOLICITATION NO.: W912P8-25-B-A026
CONTRACT NO.: WXXXXX-XX-X-XXX
ISSUE DATE: JULY 2025

THIS PROJECT WAS DESIGNED BY THE NEW ORLEANS DISTRICT CORPS OF ENGINEERS. THE INITIALS OR SIGNATURES AND REGISTRATION DESIGNATIONS OF INDIVIDUALS APPEAR ON THESE PROJECT DOCUMENTS WITHIN THE SCOPE OF THEIR EMPLOYMENT AS REQUIRED BY ER 1110-1-8152. SIGNATURES INDICATE OFFICIAL RECOMMENDATION OF ALL DRAWINGS IN THIS SET.

APPROVED BY:
C.A. Jones P.E. PMP
CULLEN A. JONES, P.E., PMP
Colonel, US Army
District Commander

APPROVAL RECOMMENDED:

CHIEF ENGINEERING DIVISION

TECHNICAL LEAD STRUCTURAL BRANCH

CHIEF STRUCTURAL BRANCH

US Army Corps of Engineers ®

MARK	DESCRIPTION	DATE

DESIGNED BY: DAVID L. GLYNN, P.E.
DRAWN BY: SDB
CHECKED BY: TARRIS GREER, P.E.
SUBMITTED BY: Lauren K. D'Armond, P.E.
SIZE: ANSI D
FILE NAME: HH4860_G-001.dgn
ISSUE DATE: JULY 2025
SOLICITATION NO.: W912P8-25-B-A026
CONTRACT NO.:

US ARMY CORPS OF ENGINEERS

FRESHWATER BAYOU WATERWAY
FRESHWATER BAYOU LOCK
NEW SHOPS BUILDING
VERMILION PARISH, LA

COVER SHEET

SHEET ID
G-001

READY FOR ADVERTISEMENT

LOCATION MAP

SCALE: 1" = 500'

0 500' 1000'

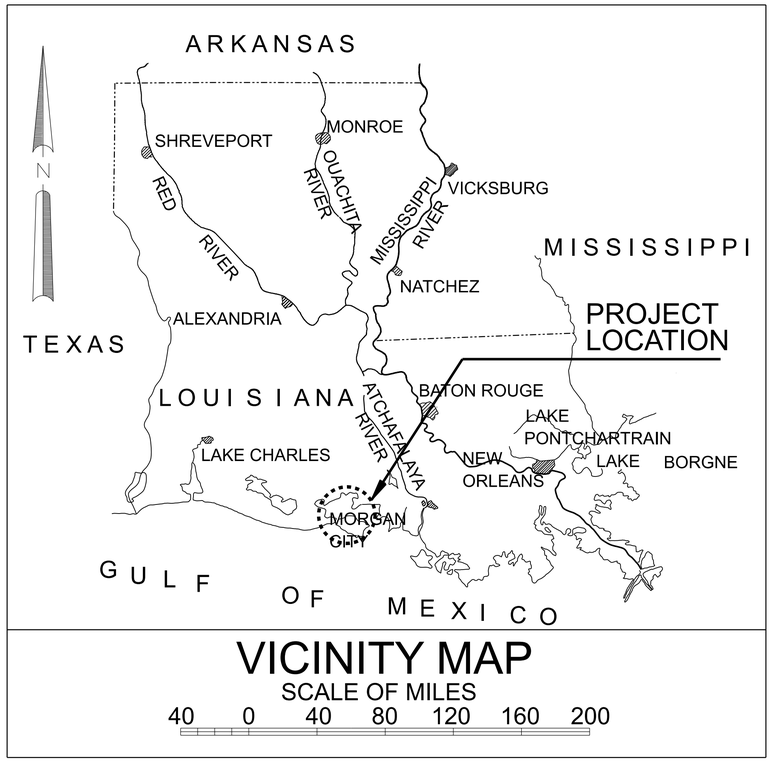

VICINITY MAP

SCALE OF MILES

40 0 40 80 120 160 200

TABULATION OF BENCHMARK (VERTICAL CONTROL)

NAME	DATUM	EPOCH	LATITUDE	LONGITUDE	NORTHING	EASTING	DESCRIPTION
876 6072 C	NAD83	NA2011	29°33'08.62756"	-92°18'19.23211"	384030.940	2971784.480	TO REACH FROM THE INTERSECTION OF STATE HIGHWAYS LA 35 AND 14 IN KAPLAN, PROCEED 27.1 MI (43.6 KM) SOUTHERLY ON LA 35 TO THE FORK INTERSECTION OF CR 3147 (A GRAVEL ROAD) ON THE LEFT, VEER LEFT AND CONTINUE 1.8 MI (2.9 KM) SOUTHERLY ON CR 3147 TO AN INTERSECTION. TURN LEFT AND CONTINUE 8.2 MI (13.2 KM) ON CR 3147 TO THE ACCESS GATE FOR THE CORPS OF ENGINEERS FRESHWATER BAYOU LOCK FACILITY AND A CURVE TO THE RIGHT IN CR 3147, CONTINUE ON AROUND THE CURVE FOR ANOTHER 20 FT (61.0 M) TO A DIRT ROAD TO THE LEFT. GO EAST ON THE DIRT ROAD ALONG THE SOUTH SECURITY FENCE FOR THE LOCK FACILITY TO A WATER ACCESS AREA. THE MARK IS ON THE RIGHT NEAR THE WATERS EDGE. THE MARK IS A FLANGE ENCASED STAINLESS STEEL ROD LOCATED 6.1 FT (20.1 M) SOUTH OF THE SOUTHERN 6 FT (1.8 m) HIGH. HEIGHT = 3.15 (NAVD88 - 2009.55 EPOCH)
V 375	NAD83	NA2011	29°55'01.55056"	-89°58'18.04218"	517907.010	3712188.660	TO REACH THE STATION FROM THE INTERSECTION OF GENERAL DE GAULLE AVENUE AND SULLEN ROAD, NEAR THE BRIDGE OVER INTERCOASTAL WATERWAY, GO NORTH ON SULLEN ROAD TO PATTERSON DRIVE (LEVEE ROAD), TURN RIGHT ON PATTERSON DRIVE AND PROCEED EAST ON PATTERSON FOR 0.9 MILES TO BLYTHE ROAD, TURN RIGHT ON BLYTHE AND GO TO GATE ENTRANCE TO LOCKS, PASSING THROUGH GATE AND MARK ON LEFT NEAR GATE. THE STATION IS 2.6 FT EAST OF CENTERLINE OF ENTRANCE ROAD TO LOCKS, 18.3 FT SOUTHEAST OF THE EAST GATE POST FOR GATE, 107 FT SOUTH OF A LIGHT POLE, 10FT SOUTH OF A WITNESS SIGN. STATION IS A STAINLESS ROD DRIVEN 25.6 M AND STAMPED V 375 1985. HEIGHT = 2.23 (NAVD88 - 2009.55 EPOCH)
W 357	NAD83	NA2011	30°01'31.97724"	-93°15'54.79672"	559937.010	2669514.770	0.8 KM (0.5 MILE) SOUTHEAST ALONG STATE HIGHWAY 384 FROM THE BIG LAKE GOSPEL CHURCH IN GRAND LAKE TO THE MARK ON THE LEFT, ABOUT THE CENTER OF A LONG CURVE, 11.89 M (39.0 FT) NORTHEAST OF THE CENTER LINE OF THE CONCRETE PIPE CULVERT UNDER THE HIGHWAY, AND 0.60 M (2.0 FT) SOUTHWEST OF A RIGHT-OF-WAY FENCE. THE MARK IS 0.37 M NW FROM A WITNESS POST. THE MARK IS 0.3 M BELOW THE HIGHWAY. A 2 FT (0.6 M) BY 4 FT (1.2 M) CONCRETE SLAB WAS POURED AROUND THE MONUMENT. AN EYE ANCHOR BOLT WAS SET INTO THE SLAB FOR LATER LOCK BOX ATTACHMENT. HEIGHT = 2.8 (NAVD88 - 2009.55 EPOCH)

US Army Corps of Engineers ®

MARK	DESCRIPTION	DATE

DESIGNED BY: DAVID L. GLYNN, P.E.
DRAWN BY: SDB
CHECKED BY: TARRIS GREER, P.E.
SUBMITTED BY: Lauren K. DiMond, P.E.
PROJ. FILE NAME: ANSI D
ISSUE DATE: JULY 2025
SOLICITATION NO.: W912P8-25-B-A026
CONTRACT NO.:

US ARMY CORPS OF ENGINEERS

FRESHWATER BAYOU WATERWAY
FRESHWATER BAYOU LOCK
NEW SHOPS BUILDING
VERMILION PARISH, LA

LOCATION AND VICINITY MAP

SHEET ID
G-002

READY FOR ADVERTISEMENT

INDEX TO DRAWINGS	
DWG.	DESCRIPTION
G-001	COVER SHEET
G-002	LOCATION & VICINITY MAP
G-003	DRAWING INDEX AND SYMBOLOGY
G-004	ABBREVIATIONS
C-101	SITE PLAN - EXISTING
C-101A	PARTIAL SITE PLAN
C-102	EXISTING UTILITIES
C-102A	EXISTING UTILITIES DISPOSITION TABLES
C-103	SITE PLAN - PROPOSED
C-104	CONCRETE TRANSITIONAL PAVING PLAN & SECTIONS
S-001	GENERAL NOTES
S-101	OVERALL PILE LAYOUT & PLATFORM FRAMING PLANS
S-102	ENLARGED PLATFORM FRAMING PLAN
S-103	FLOOR PLAN
S-104	SOUTH STAIR PLAN AND SECTION
S-105	NORTH STAIR PLAN AND SECTION
S-201	EAST AND WEST EXTERIOR ELEVATIONS
S-202	NORTH AND SOUTH EXTERIOR ELEVATIONS
S-301	BUILDING AND RAMP CROSS SECTIONS
S-401	PRECAST FRAMING ENLARGED PLANS AND SECTIONS
S-402	PRECAST FRAMING SECTIONS
S-403	PRECAST FRAMING SECTIONS
S-404	STAIR SECTIONS
S-501	DETAILS
S-901	NORTHEAST ISOMETRIC
S-902	SOUTHEAST ISOMETRIC

INDEX TO DRAWINGS	
DWG.	DESCRIPTION
E-001	ELECTRICAL LEGEND
E-100	ELECTRICAL SITE PLAN
E-101	ELECTRICAL PLAN
E-102	LIGHTING PLAN
E-200	EXTERIOR ELEVATIONS
E-300	LIGHTING SCHEDULE
E-301	PANEL SCHEDULE
M-201	MECHANICAL EQUIPMENT EAST AND WEST EXTERIOR ELEVATIONS
M-202	MECHANICAL EQUIPMENT NORTH AND SOUTH EXTERIOR ELEVATIONS
B-101	BORING LOG 1 OF 4
B-102	BORING LOG 2 OF 4
B-103	BORING LOG 3 OF 4
B-104	BORING LOG 4 OF 4
REF-100	REFERENCE SHEET
REF-101	REFERENCE SHEET

GENERAL NOTES:

1. HORIZONTAL DISTANCES ARE MEASURED IN US SURVEY FEET.
2. XY COORDINATES USED IN DRAWINGS REFER TO HORIZONTAL DATUM: NAD 83, STATE PLANE, LA SOUTH, ZONE 1702, US FEET.
3. DIMENSIONS AND/OR ELEVATIONS MARKED PLUS OR MINUS (+/-) ARE APPROXIMATE READING. THE CONTRACTOR SHALL VERIFY ACTUAL DIMENSIONS IN THE FIELD.
4. DRAWINGS ARE GENERALLY TO SCALE, BUT SHOULD NOT BE SCALED. NTS IS SHOWN ONLY WHERE DRAWING IS OBVIOUSLY OUT OF SCALE.
5. ALL ELEVATIONS ARE EXPRESSED IN FEET AND REFER TO NAVD 88 (2009.55), UNLESS OTHERWISE STATED.
6. LOCATION OF EXISTING UTILITIES INDICATED ON THE PLAN SHEETS ARE SHOWN FOR INFORMATIONAL PURPOSES ONLY AND ARE BASED, IN PART, ON INFORMATION PROVIDED BY THE RESPECTIVE UTILITY COMPANIES. IT IS THE CONTRACTOR'S RESPONSIBILITY TO VERIFY ALL EXISTING UTILITY LOCATIONS PRIOR TO CONSTRUCTION. SEE SPECIFICATIONS FOR A LIST OF ALL UTILITY CONTACTS.
7. THE CONTRACTOR IS RESPONSIBLE FOR ANY DAMAGE TO EXISTING UTILITIES IF DAMAGE OCCURS AS A RESULT OF HIS NEGLIGENCE. THE DAMAGE SHALL BE REPAIRED AT THE CONTRACTOR'S EXPENSE.
8. DUST CONTROL - CONTRACTOR SHALL TAKE MEASURES TO PREVENT UNNECESSARY DUST WHILE TRANSPORTING EARTHEN MATERIAL WITHIN THE LEVEE RIGHT-OF-WAY. THE EMBANKMENT SHALL BE KEPT MOIST TO PREVENT BLOWING.
9. CONTRACTOR SHALL VISIT THE SITE OF WORK AND COMPLETELY INFORM HIMSELF RELATIVE TO THE EXISTING CONDITIONS PRIOR TO THE START OF CONSTRUCTION.
10. ALL WORK AROUND HIGH VOLTAGE POWER LINES SHALL BE IN ACCORDANCE WITH OSHA, ENTERGY REQUIREMENTS, AND USACE SAFETY MANUAL "EM-385-1-1"
11. THE CONTRACTOR SHALL MAKE HIS OWN INTERPRETATION OF THE CHARACTER AND CONDITION OF THE MATERIALS WHICH WILL BE ENCOUNTERED BETWEEN THE BORING LOCATIONS. THE CONTRACTOR, AT HIS OWN EXPENSE, MAY MAKE ADDITIONAL SURVEYS AND INVESTIGATIONS AS NECESSARY TO DETERMINE CONDITIONS WHICH WILL AFFECT THE PERFORMANCE OF THE WORK.
12. SPEED LIMIT WITHIN CONSTRUCTION LIMITS IS 10 MPH.
13. THE CONTRACTOR SHALL CLEAN AND REMOVE ALL TRASH IN THE PROJECT LIMIT PRIOR TO END OF CONTRACT.
14. THE CONTRACTOR SHALL KEEP ALL STATE AND FEDERAL HIGHWAYS CLEAN DURING CONSTRUCTION. THE CONTRACTOR SHALL HAVE WASH RACKS, SWEEPERS AND SCRAPERS ONSITE. ALL STREETS AND HIGHWAYS SHALL BE CLEANED DAILY OF MUD, DEBRIS ETC.
15. ALL CONTRACTOR HAULING OPERATIONS SHALL ABIDE BY FEDERAL, STATE, AND LOCAL LAWS AND ORDINANCES INCLUSIVE OF POSTED WEIGHT LIMITS. THE CONTRACTOR,
SUBCONTRACTOR, OR SUPPLIERS SHALL OBSERVE LEGAL ROAD LIMIT, WHEN HAULING EQUIPMENT MATERIALS ON PUBLIC ROAD BEYOND THE PROJECT LIMIT. A SPECIAL PERMIT DOES NOT DECREASE THE CONTRACTOR'S LIABILITY FOR DAMAGE.
16. PRIOR TO FABRICATION AND CONSTRUCTION OF PERMANENT WORK, THE CONTACTOR SHALL VERIFY ALL DIMENSIONS, EVEN WITH GOVERNMENT APPROVAL OF THE PLANS.

GENERAL CROSS-REFERENCING SYMBOLS

A — DETAIL/SECTION — SUPPLEMENTAL INFORMATION — SCALE: — SECTION/DETAIL TITLE ON SAME DRAWING (CENTERED UNDER SECTION/DETAIL)

2 / 99/999 — DETAIL/SECTION — SCALE: — SECTION/DETAIL TITLE ON ANOTHER DRAWING (CENTERED UNDER SECTION/DETAIL)

TOP ELEVATION — FRONT SECTION — SIDE A — VIEW SUBTITLE (CENTERED UNDER EACH VIEW)

2 — SECTION CUT W/ VIEW SHOWN ON SAME DRAWING

2 / 99/999 — SECTION CUT W/ VIEW SHOWN ON ANOTHER DRAWING

A — DETAIL SYMBOL W/ VIEW SHOWN ON SAME DRAWING

DETAIL SYMBOL W/ VIEW SHOWN ON ANOTHER DRAWING

GENERAL LEGEND

- P.I. POINT
- FIRE HYDRANT
- MANHOLE
- CB — CATCHBASIN
- WATER VALVE
- POWER POLE
- S S$_X$ — EXISTING SANITARY SEWER
- S D$_X$ — EXISTING STORM SEWER
- W$_X$ — EXISTING WATERMAIN
- W — NEW WATERMAIN
- E$_X$ — EXISTING OVERHEAD P0WER
- E$_X$ — EXISTING SECONDARY OVERHEAD P0WER
- EXISTING FENCE
- G$_X$ — EXISTING GAS
- C$_X$ — EXISTING COMMUN. LINE (TELEPHONE)
- C T V — EXISTING CABLE (COAXIAL T.V.)
- C P — EXISTING CULVERT PIPE
- 97-41M — UNDISTURB BORING LOCATION
- GENERAL SOIL BORING
- CONE PENETROMETER (CPT)
- SHEETPILE
- SLOPE
- LEVEE
- LIMIT OF CONSTRUCTION
- C/E — TEMPORARY WORK AREA EASEMENT
- PROPERTY LINE (P/L)
- ACCESS ROAD C/L
- STORM MANHOLE
- W — WATER METER
- ROAD SIGN
- ST — STORM SEWER TANK
- CO — CLEAN OUT VALVE
- EM — ELECTRIC METER POLE

US Army Corps of Engineers ®

MARK	DESCRIPTION	DATE

DESIGNED BY: DAVID L GLYNN, P.E.
DRAWN BY: SDB
CHECKED BY: TARRIS GREER, P.E.
SUBMITTED BY: Lauren K. Dartmond, P.E.
SPEC'S: TITLE HERE
ANSI D
ISSUE DATE: JULY 2025
SOLICITATION NO.: W912P8-25-B-A026
CONTRACT NO.:

US ARMY CORPS OF ENGINEERS

FRESHWATER BAYOU WATERWAY
FRESHWATER BAYOU LOCK
NEW SHOPS BUILDING
VERMILION PARISH, LA

DRAWING INDEX AND SYMBOLOGY

SHEET ID
G-003

READY FOR ADVERTISEMENT

ABBREVIATIONS

AB	ANCHOR BOLT
ABV	ABOVE
ADH	ADHESIVE
AFF	ABOVE FINISHED FLOOR
AGGR	AGGREGATE
AHR	ANCHOR
AHU	AIR HANDLING UNIT
AIC	AMPS INTERRUPTING CAPACITY
ALT	ALTERNATE
ALUM	ALUMINUM
AMP	AMPERE
ANSI	AMERICAN NATIONAL STANDARDS INSTITUTE
APPD	APPROVED
APPROX	APPROXIMATE
ASPH	ASPHALT
AUTO	AUTOMATIC
AVG	AVERAGE
AWG	AMERICAN WIRE GAUGE
BL	BUILDING LINE OR BASELINE
BLDG	BUILDING
BLW	BELOW
BM	BENCHMARK
BOC	BACK OF CURB
BOT	BOTTOM
BRCG	BRACING
BRDG	BRIDGING
BRG	BEARING
BRG	BEARING PLATE
BRKT	BRACKET
BS	BOTH SIDES
BTWN	BETWEEN
BW	BOTH WAYS
CAP	CAPACITY
CE	CONSTRUCTION EASEMENT
CB	CATCH BASIN
CFM	CUBIC FEET PER MINUTE
CHFR	CHAMFER
CI	CAST IRON
CIP	CAST-IN-PLACE
CJ	CONTROL JOINT
CJ	CONSTRUCTION JOINT
CKT	CIRCUIT
CKT BRKR	CIRCUIT BREAKER
CL, C/L	CENTER LINE
CLG	CEILING
CLG HT	CEILING HEIGHT
CLKG	CAULKING
CLL	CONTRACT LIMIT LINE
CLOS	CLOSURE
CLR	CLEAR(ANCE)
CMP	CORRUGATED METAL PIPE
CMU	CONCRETE MASONRY UNIT
CND	CONDUIT
CNR	CORNER
COL	COLUMN
COMP	COMPRESSOR
CONC	CONCRETE
CONSTR	CONSTRUCTION
CONT	CONTINUE
CONTR	CONTRACTOR
CRS	CORROSIVE RESISTANT STEEL
CSMT	CASEMENT
CT	CURRENT TRANSFORMER
C TO C	CENTER TO CENTER
CTR	CENTER
CTSK	COUNTERSUNK SCREW
CU	CONDENSING UNIT
CU FT	CUBIC FEET

CU YD	CUBIC YARDS
CW	COLD WATER
DBL	DOUBLE
DCJT	DUMMY CONTROL JOINT
DEG	DEGREE
DEMO	DEMOLITION
DEPT	DEPARTMENT
DET	DETAIL
DIA	DIAMETER
DIAG	DIAGONAL
DIM	DIMENSION
DISC	DISCONNECT
DL	DEAD LOAD
DMPR	DAMPER
DN	DOWN
DR	DOOR
DR	DRAIN
DWG	DRAWING
DWLS	DOWELS
E	EAST
EA	EACH
EF	EACH FACE
EJ	EXPANSION JOINT
EL	ELEVATION - GRADE OR BUILDING
ELEC	ELECTRIC
EMBED	EMBEDMENT
EP	ELECTRIC PANELBOARD
EPY	EPOXY COATING
EQ	EQUAL
EQUIP	EQUIPMENT
EXC	EXCAVATE
EXH	EXHAUST
EXIST	EXISTING
EXP	EXPANSION
EXP	EXPOSED
EXP BT	EXPANSION BOLT
EXT	EXTERIOR
EW	EACH WAY
F	FAHRENHEIT
FBO	FURNISHED BY OTHERS
FCG	FACING
FCJ	FLOOR CONSTRUCTION JOINT
FCU	FAN COIL UNIT
FD	FLOOR DRAIN
FDTN	FOUNDATION
FF	FAR FACE
FIN	FINISH
FIN	FLR FINISH FLOOR
FLR	FLOOR
FLEX	FLEXIBLE
FN	FENCE
FOC	FACE OF CONCRETE
FTG	FOOTING
GALV	GALVANIZE(D)
GEN	GENERATOR
GRAN	GRANULAR
GRTG	GRATING
HNDRL	HANDRAIL
HORIZ	HORIZONTAL
HP	HORSEPOWER
HS	HIGH STRENGTH
HT	HEIGHT
HTG	HEATING
HTR	HEATER
HVAC	HEATING, VENTILATING AND
Hz	HERTZ

ID	INSIDE DIAMETER
IE	INVERT ELEVATION
IF	INSIDE FACE
ILK	INTERLOCK
IN.	INCH
INCL	INCLUDED
INSUL	INSULATION
INTM	INTERMEDIATE
INV	INVERT
IP	IRON PIPE
IPS	IRON PIPE SIZE
J-BOX	JUNCTION BOX
JCT	JUNCTION
JF	JOINT FILLER
JST	JOIST
JT	JOINT
KOP	KNOCKOUT PANEL
KPL	KICK PLATE
kV	KILOVOLTS
kVA	KILOVOLT AMPERES
kW	KILOWATT
KWY	KEYWAY
LAD	LADDER
LB	POUND
LDG	LOADING
LG	LENGTH
LIN	LINEAR
LL	LIVE LOAD
LONG	LONGITUDINAL
LP	LEVEE WORKING POINT
LVR	LOUVER
MATL	MATERIAL(S)
MAX	MAXIMUM
MCC	MOTOR CONTROL CENTER
MECH	MECHANICAL
MED	MEDIUM
MFG	MANUFACTURING
MFR	MANUFACTURER
MG	MOTOR GENERATOR
MH	MANHOLE
MIN	MINIMUM
MIRR	MIRROR
MISC	MISCELLANEOUS
MJ	MONOLITH JOINT
ML	MONOLITHIC
MNIC	MATERIAL NOT IN CONTRACT
MOD.	MODIFIED
MOT	MOTOR
MT	MOUNT
MTL	METAL
N	NORTH
NAVD-88	NORTH AMERICAN VERTICAL DATUM
NEC	NATIONAL ELECTRICAL CODE
NEMA	NATIONAL ELECTRICAL MANUFACTURERS ASSOCIATION
NF	NEAR FACE
NFPA	NATIONAL FIRE PROTECTION ASSOCIATION
NIC	NOT IN CONTRACT
NO	NUMBER
NOM	NOMINAL
N'REQD	NOT REQUIRED
NTS	NOT TO SCALE

OC	ON CENTER
OCEW	ON CENTER EACH WAY
OD	OUTSIDE DIAMETER
OH	OVERHEAD
OPH	OPPOSITE HAND
OPNG	OPENING
OPP	OPPOSITE
PAR	PARALLEL
PCC	PRECAST CONCRETE
PCF	POUNDS PER CUBIC FOOT
PD	PAVEMENT DRAIN
PED	PEDESTAL
PERF	PERFORATE(D)
PERIM	PERIMETER
PH	PHASE
PI	POINT OF INTERSECTION
PIV	POST INDICATING VALVE
PL	PLATE
PL	PROPERTY LINE
PLAT	PLATFORM
PLBG	PLUMBING
PLF	POUNDS PER LINEAR FOOT
PLG	PILING
PNL	PANEL
PORT	PORTABLE
PP	PIPE PILE
PREFIN	PREFINISHED
PREFMD	PREFORMED
PROJ	PROJECT
PRV	PRESSURE-REGULATING VALVE
PS	PIPE SPACE
PS CONC	PRESTRESSED CONCRETE
PSF	POUNDS PER SQUARE FOOT
PSI	POUNDS PER SQUARE INCH
PT.	POINT
PT	CONC POST-TENSIONED CONCRETE
PV	PAVED
PVC	POLYVINYL CHLORIDE
PVMT	PAVEMENT
(+/-)	PLUS OR MINUS
QT.	QUART
QTR	QUARTER
QTY	QUANTITY
R	RADIUS
RA	RETURN AIR
RCP	REINFORCED CONCRETE PIPE
RCB	REINFORCED CONCRETE BOX
RECPT	RECEPTACLE
REF	REFERENCE
REINF	REINFORCE
REQD	REQUIRED
RET	RETURN
REV	REVISION
RGH	ROUGH
RH	RIGHT HAND
RND	ROUND
RO	ROUGH OPENING
RSR	RISER
RVS	REVERSE
R/W	RIGHT OF WAY
S	SOUTH
SA	SUPPLY AIR
SCR	SCREW
SCRN	SCREEN
SECT	SECTION
SEQ	SEQUENCE
SFGL	SAFETY GLASS

SHTHG	SHEATHING
SIM	SIMILAR
SJI	STEEL JOIST INSTITUTE
SLNT	SEALANT
SLV	SLEEVE
SM	SHEET METAL
SOV	SHUT OFF VALVE
SPA	SPACE(S)
SPC	SPACER
SPEC	SPECIFICATION
SQ	SQUARE
SST	STAINLESS STEEL
STAB	STABILIZATION
STA	STATION
STD	STANDARD
STIFF	SIFFENER
STL	STEEL
STN	STONE
STOR	STORAGE
ST PR	STATIC PRESSURE
STRUCT	STRUCTURAL
STWY	STAIRWAY
SURF	SURFACE
SW	SWITCH
SWBD	SWITCHBOARD
SYMM	SYMMETRICAL
SYS	SYSTEM
T	TREAD
T&B	TOP AND BOTTOM
TAN	TANGENT
TEL	TELEPHONE
TEMP	TEMPERATURE
TERM	TERMINAL
THK	THICK(NESS)
THRES	THRESHOLD
TOC	TOP OF CONCRETE
TOG	TOP OF GRATING
TOL	TOLERANCE
TOPO	TOPOGRAPHY
TR	TRANSFORMER
TRANS	TRANSVERSE
TRS	TEMPORARY RETAINING STRUCTURE
TOS	TOP OF SLAB
TOS	TOP OF STEEL
TOW	TOP OF WALL
TSTAT	THERMOSTAT
TYP	TYPICAL
UL	UNDERWRITERS LABORATORIES
UNEX	UNEXCAVATED
UNFIN	UNFINISHED
UPS	UNINTERRUPTABLE POWER SUPPLY
UTIL	UTILITY
UV	UNIT VENTILATOR
V	VOLT
VAB	VAPOR BARRIER
VENT	VENTILATOR(TION)
VERT	VERTICAL
VS	VENT STACK
W	WEST
WTH	WIDTH
W/	WITH
W/L	WALL LINE
WM	WIRE MESH
W/O	WITHOUT
WP	WATERPROOF(ING)

WP	WEATHERPROOF
WP	WORKING POINT
WS	WATERSTOP
WT	WEIGHT
W/W	WALL TO WALL
WWF	WELDED WIRE FABRIC
XFMR	TRANSFORMER
COR	CONTRACTING OFFICERS REPRESENTATIVE
A	AMPERES
AIC	AMPERES INTERRUPTING CAPACITY
ATS	AUTOMATIC TRANSFER SWITCH
BKR	BREAKER
C	CONDUIT
C/C	CENTER-TO-CENTER
CFL	COMPACT FLUORESCENT LAMP
CFCI	CONTRACTOR FURNISHED CONTRACTOR INSTALLED
DB	DIRECT BURIAL
DP	DOUBLE POLE
E	ELECTRICAL LINE, OVER HEAD
EF	EXHAUST FAN
EMT	ELECTRICAL METALLIC TUBING
EX	EXIT/EMERGENCY LIGHTING FIXTURE
FSS	FUSIBLE SAFETY SWITCH
FT	FOOT.FEET
GFCI	GROUND FAULT CIRCUIT INTERRUPTER
GRD, G	GROUND
GRS	GALVANIZED RIGID STEEL CONDUIT
JB	JUNCTION BOX
LFMC	LIQUIDTIGHT FLEXIBLE METAL CONDUIT
LV	MANUALLY OPERATED LOUVER
M	ELECTRIC METER
MDS	MAIN DISCONNECT SWITCH
MH	MOUNTING HEIGHT
MH-2	MANHOLE NO.2 (TYPICAL)
MLO	MAIN LUG ONLY
N	NEUTRAL
NFSS	NON-FUSIBLE SAFETY SWITCH
PB	PULL BOX
PNLB	PANELBOARD
PRI	PRIMARY
R	RELAY CONTRACTOR AND RELAY COIL
RMC	RIGID METAL CONDUIT
S	SINGLE POLE TOGGLE LIGHTING SWITCH
S3	THREE-WAY TOGGLE LIGHTING SWITCH
SEC	SECONDARY
SF	SUPPLY FAN
SM	HORSEPOWER RATED MANUAL TOGGLE SWITCH
SP	SINGLE POLE
SPECS	SPECIFICATIONS
SV	VARIABLE SPEED CONTROL SWITCH
TBM	TEMPORARY BENCH MARK
TVSS	TRANSIENT VOLTAGE SURGE SUPPRESSOR
UE	UNDERGROUND ELECTRIC
WD	WINDOW

NOTE:

1. ALL ABBREVIATIONS SHOWN ON THIS SHEET MAY NOT APPEAR ON THIS SET OF DRAWINGS.

US Army Corps of Engineers ®

MARK	DESCRIPTION	DATE

ISSUE DATE: JULY 2025
SOLICITATION NO.: W912P8-25-B-A026
CONTRACT NO.:

DESIGNED BY:
DRAWN BY: SDB
CHECKED BY:

SUBMITTED BY: Lauren K. Dalmond, P.E.
DATE:
FILE NAME: H448601_G-004.dgn

USARMY CORPS OF ENGINEERS

FRESHWATER BAYOU WATERWAY
FRESHWATER BAYOU LOCK
NEW SHOPS BUILDING
VERMILION PARISH, LA

ABBREVIATIONS

SHEET ID
G-004

READY FOR ADVERTISEMENT

SITE PLAN - EXISTING
SCALE: 1" = 60'

PLAN NORTH

US Army Corps of Engineers ®

MARK	DESCRIPTION	DATE

DESIGNED BY:
DRAWN BY: SDB
CHECKED BY:
ISSUE DATE: JULY 2025
SOLICITATION NO.: W912PR-25-B-A026
CONTRACT NO.:
SUBMITTED BY: Lauren K. D'Armond, P.E.
SIZE: ANSI D
FILE NAME: H44860I_C-101.dgn

US ARMY CORPS OF ENGINEERS

FRESHWATER BAYOU WATERWAY
FRESHWATER BAYOU LOCK
NEW SHOPS BUILDING
VERMILION PARISH, LA

SITE PLAN - EXISTING

SHEET ID
C-101

READY FOR ADVERTISEMENT

GENERAL NOTES

- HORIZONTAL VERTICAL CONTROL POINT
- TEMPORARY CONTROL MARK
- MAJOR CONTOUR LINE
- MINOR CONTOUR LINE
- TOPO BREAKLINE
- DTM BOUNDARY EXTERIOR
- EDGE OF ROAD

PARTIAL SITE PLAN

SCALE: 1" = 20'

PLAN NORTH

US Army Corps of Engineers ®

MARK	DESCRIPTION	DATE

DESIGNED BY:
DRAWN BY: SDB
CHECKED BY:
ISSUE DATE: JULY 2025
SOLICITATION NO.: W912PR-25-B-A026
CONTRACT NO.:
SUBMITTED BY: Lauren K. D'Armond, P.E.
SIZE: ANSI D
FILE NAME: C-101A.dgn

US ARMY CORPS OF ENGINEERS

FRESHWATER BAYOU WATERWAY
FRESHWATER BAYOU LOCK
NEW SHOPS BUILDING
VERMILION PARISH, LA

PARTIAL SITE PLAN

SHEET ID
C-101A

READY FOR ADVERTISEMENT

EXISTING UTILITIES

SCALE: 1" = 20'

PLAN NORTH

GENERAL NOTES

SEE C-102A FOR EXISTING UTILITY DISPOSITION TABLES

LEGEND

- BUILDING OUTLINE
- FENCE LINE
- STRUCTURE OUTLINE
- PB — PULL BOX
- E — ELECTRICAL HANDHOLE
- E — UNDERGROUND ELECTRICAL LINE
- J — COMMUNICATION JUNCTION BOX
- C/F — UNDERGROUND COMMUNICATION LINE
- WVL — WATER VALVE
- W — WATER LINE
- L — SANITARY SEWER LIFT/PUMP STATION
- SS — SANITARY SEWER MAIN LINE
- UNKNOWN UNDERGROUND UTILITY LINE

US Army Corps of Engineers ®

MARK	DESCRIPTION	DATE

DESIGNED BY:
DRAWN BY: SDB
CHECKED BY:
ISSUE DATE: JULY 2025
SOLICITATION NO.: W912PR-25-B-A026
CONTRACT NO.:
SUBMITTED BY: Lauren K. D'Armond, P.E.
SIZE: ANSI D
FILE NAME: H426M_C-102.dgn

US ARMY CORPS OF ENGINEERS

FRESHWATER BAYOU WATERWAY
FRESHWATER BAYOU LOCK
NEW SHOPS BUILDING
VERMILION PARISH, LA

EXISTING UTILITIES

SHEET ID
C-102

READY FOR ADVERTISEMENT

EXISTING STRUCTURES

ITEM NO.	DESCRIPTION	SHEET NO.	OWNER	DISPOSITION
1	EXISTING SHOPS BLDG.	C-102	USACE	DND
2	STORAGE BLDG.	C-102	USACE	DND
3	LOCK	C-102	USACE	DND

EXISTING ELECTRIC UTILITIES - UNDERGROUND

ITEM NO.	DESCRIPTION	SHEET NO.	X	Y	OWNER	DISPOSITION
E1	POWER LINE	C-102	2971649.29	384767.86	USACE	DND
E2	POWER LINE	C-102	2971619.12	384772.89	USACE	DND
E3	POWER LINE	C-102	2971631.90	384851.07	USACE	DND
E4	POWER LINE	C-102	2971863.07	384804.85	USACE	DND
E5	POWER LINE	C-102	2971804.65	384817.90	USACE	DND
E6	POWER LINE	C-102	2971867.47	384799.25	USACE	DND
E7	POWER LINE	C-102	2971828.52	384785.36	USACE	DND
E8	POWER LINE	C-102	2971759.98	384799.41	USACE	DND
E9	POWER LINE	C-102	2971655.18	384767.28	USACE	DND

SEWER LINES

ITEM NO.	DESCRIPTION	SHEET NO.	X	Y	OWNER	DISPOSITION
S1	SEWER LINE	C-102	2971687.02	384764.88	USACE	DND
S2	SEWER LINE	C-102	2971653.16	384765.89	USACE	DND
S3	SEWER LINE	C-102	2971758.42	384799.29	USACE	DND
S4	SEWER LINE	C-102	2971828.15	384784.52	USACE	DND
S5	SEWER LINE	C-102	2971869.05	384799.57	USACE	DND

WATER LINES

ITEM NO.	DESCRIPTION	SHEET NO.	X	Y	OWNER	DISPOSITION
W1	WATER LINE	C-102	2971736.27	384950.42	USACE	DND
W2	WATER LINE	C-102	2971748.20	384974.62	USACE	DND

WATER VALVE

ITEM NO.	DESCRIPTION	SHEET NO.	X	Y	OWNER	DISPOSITION
WVL	WATER VALVE	C-102	2971906.85	384804.77	USACE	DND

US Army Corps of Engineers ®

MARK	DESCRIPTION	DATE

DESIGNED BY:
DRAWN BY: SDB
CHECKED BY:
ISSUE DATE: JULY 2025
SOLICITATION NO.: W912P8-25-B-A026
CONTRACT NO.:
SUBMITTED BY: Lauren K. D'Aimond, P.E.
SIZE: ANSI D
FILE NAME: C-102A.dgn

US ARMY CORPS OF ENGINEERS

FRESHWATER BAYOU WATERWAY
FRESHWATER BAYOU LOCK
NEW SHOPS BUILDING
VERMILION PARISH, LA

EXISTING UTILITIES DISPOSITION TABLES

SHEET ID
C-102A

READY FOR ADVERTISEMENT

LIMITS OF WORK		
PT.	X	Y
1	2971568.76	384359.79
2	2971648.13	384844.98
3	2971694.26	384833.06
4	2971836.21	385152.24
5	2971968.50	385082.68
6	2971838.95	384319.32

STAGING AREA		
PT.	X	Y
A	2971856.75	384851.56
B	2971921.54	384840.56
C	2971946.55	384962.79
D	2971902.95	384966.86
E	2971915.04	384988.18
F	2971950.00	384983.15
G	2971968.50	385082.68
H	2971955.49	385088.69

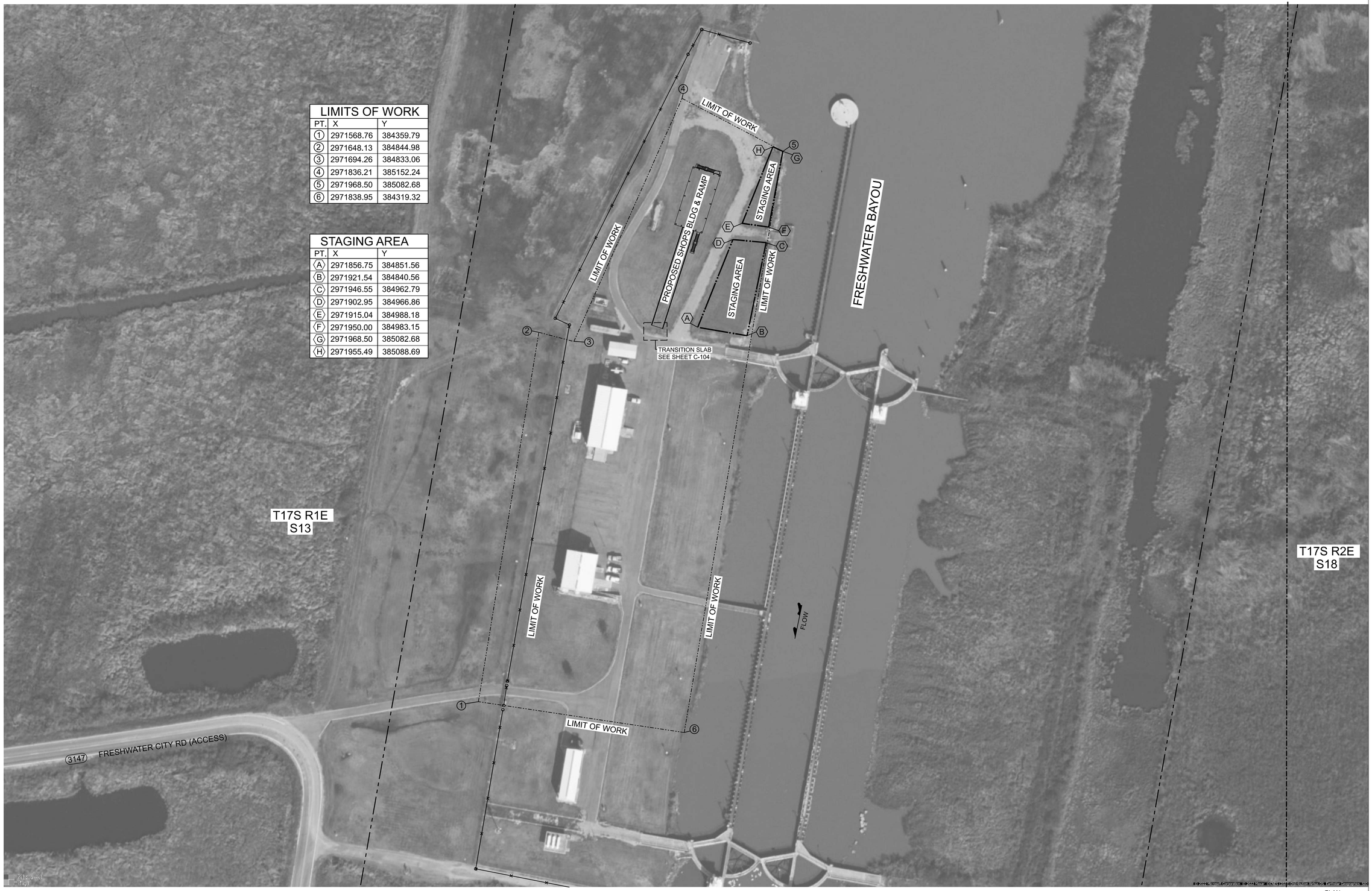

SITE PLAN - PROPOSED
SCALE: 1" = 60'

PLAN NORTH

US Army Corps of Engineers ®

MARK	DESCRIPTION	DATE

DESIGNED BY:
DRAWN BY: SDB
CHECKED BY:
ISSUE DATE: JULY 2025
SOLICITATION NO.: W912P8-25-B-A026
CONTRACT NO.:
SUBMITTED BY: Lauren K. D'Armond, P.E.
SIZE: ANSI D
FILE NAME: H44860I_C-103.dgn

US ARMY CORPS OF ENGINEERS

FRESHWATER BAYOU WATERWAY
FRESHWATER BAYOU LOCK
NEW SHOPS BUILDING
VERMILION PARISH, LA

SITE PLAN - PROPOSED

SHEET ID
C-103

READY FOR ADVERTISEMENT

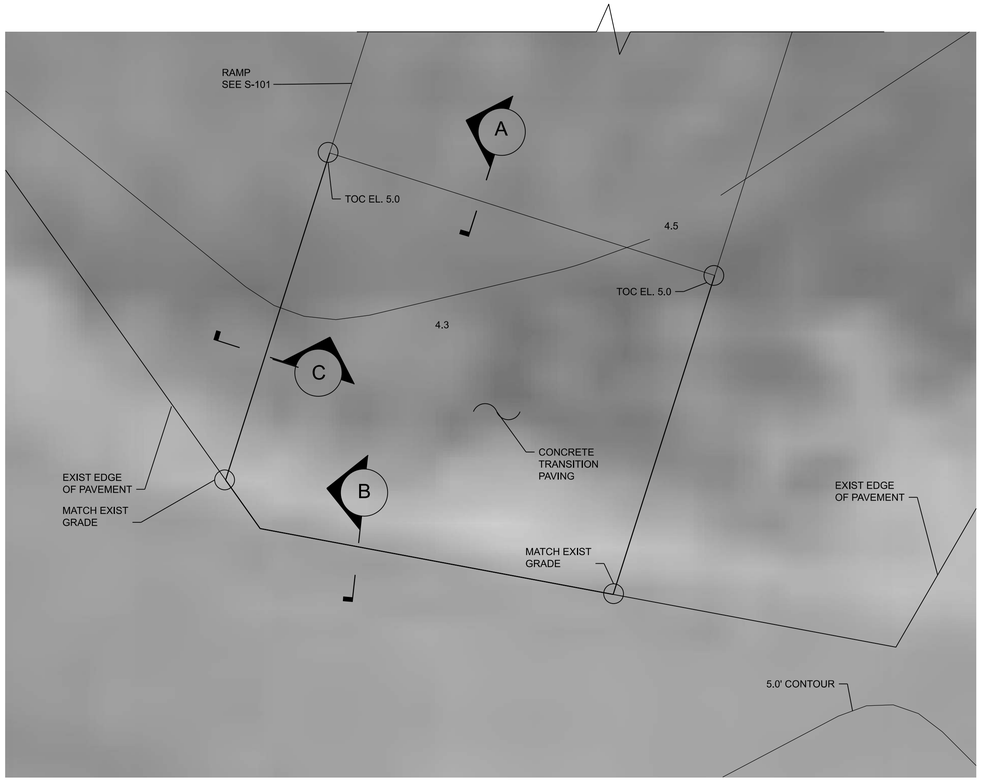

CONCRETE TRANSITION PAVING PLAN

SCALE: 1'=3"

GENERAL NOTES

1. PORTLAND CEMENT CONCRETE PAVEMENT MEETING THE REQUIREMENTS OF LSSRB 601.
2. CONCRETE SHALL BE PORTLAND CEMENT CONCRETE CLASS B MEETING THE REQUIREMENTS OF LSSRB 901.
3. REINFORCING STEEL SHALL BE ASTM A615 AND SHALL COMPLY WITH LSSRB 1009.01.
4. JOINT FILLER SHALL MEET THE REQUIREMENTS OF LSSRB 1005.01.
5. CRUSHED STONE BASE COURSE CLASS II MEETING THE REQUIREMENTS OF LSSRB 302.
6. CURING MATERIALS SHALL COMPLY WITH LSSRB 1011.01.
7. PREPARE SUBGRADE TO MEET THE REQUIREMENTS OF LSSRB 203.08.

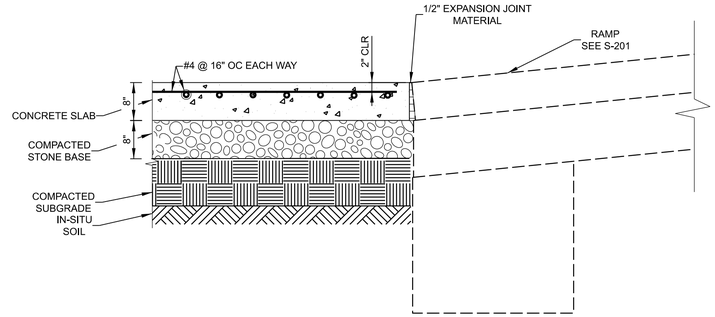

A SECTION

SCALE: 3/4"=1'

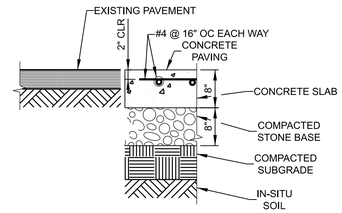

B SECTION

SCALE: 3/4"=1'

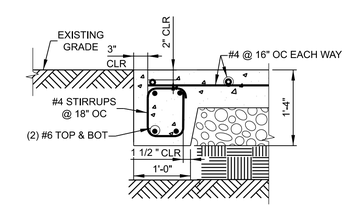

C SECTION

SCALE: 3/4"=1'

US Army Corps of Engineers ®

MARK	DESCRIPTION	DATE

ISSUE DATE: JULY 2025
SOLICITATION NO.: W912P8-25-B-A026
CONTRACT NO.:
DESIGNED BY:
DRAWN BY: SDB
CHECKED BY:
SUBMITTED BY: Lauren K. D'Armond, P.E.
SIZE: ANSI D
FILE NAME: H448601_C-104.dgn

US ARMY CORPS OF ENGINEERS

FRESHWATER BAYOU WATERWAY
FRESHWATER BAYOU LOCK
NEW SHOPS BUILDING
VERMILION PARISH, LA

CONCRETE TRANSITIONAL PAVING PLAN AND SECTIONS

SHEET ID
C-104

READY FOR ADVERTISEMENT

CR - CONTRACTOR RESPONSIBILITIES

1. THE CONTRACTOR SHALL BE RESPONSIBLE FOR COORDINATING THE REQUIRED DESIGNS, MANUFACTURING, AND INSTALLATIONS OF BOTH THE PRECAST FRAMING AND THE METAL BUILDING SYSTEM, AS WELL AS ALL OTHER RELATED COMPONENTS IN ACCORDANCE WITH THE CONTRACT REQUIREMENTS.
2. ALL CONSTRUCTION SHALL BE IN ACCORDANCE WITH THE SPECIFICATION AND STANDARD DETAILS AS SHOWN IN UNIFIED FACILITY CRITERIA (UFC) UFC 1 -200-01 DOD BUILDING CODE DATED 8 OCTOBER 2019 WITH CHANGE 1 DATED 1 OCTOBER 2020 AND THE INTERNATIONAL BUILDING CODE (IBC) 2018.
3. THE CONTRACTOR SHALL MAINTAIN AND ADHERE TO ALL CONSTRUCTION SITE SAFETY IN ACCORDANCE WITH USACE ENGINEERING MANUAL EM 385-1-1 AND UFC SAFETY CRITERIA (UFC 4-020-01).
4. ANY WORK PERFORMED WITHOUT THE APPROVAL OF THE PROJECT ENGINEER AND/OR ALL MATERIAL NOT IN CONFORMANCE WITH THE SPECIFICATION IS SUBJECT TO REMOVAL AND REPLACEMENT AT THE CONTRACTOR'S EXPENSE.
5. THE CONTRACTOR SHALL BE RESPONSIBLE FOR REMOVAL AND DISPOSAL OF EXCESS MATERIALS AND WASTE. SUCH DISPOSAL AND REMOVAL SHALL NOT CREATE A NUISANCE. EARTHWORK MATERIAL SHALL BE REMOVED IMMEDIATELY AND DISPOSED OF AT THE DISCRETION OF THE COR.
6. THE CONTRACTOR SHALL RESTORE ANY DISTURBED AREAS TO EQUAL OR BETTER CONDITION THAN EXISTED BEFORE CONSTRUCTION.
7. ALL PROPRIETARY SYSTEMS AND ACCESSORIES SHALL BE INSTALLED WITH STRICT ADHERENCE TO THE MANUFACTURERS INSTRUCTIONS AND RECOMMENDATIONS.

DC - DESIGN CRITERIA

1. THE STRUCTURES SHALL BE DESIGNED IN ACCORDANCE WITH THE DOD BUILDING CODE UFC 1-200-01, INTERNATIONAL BUILDING CODE (IBC) 2018 EDITION, UFC 3-301-01 STRUCTURAL ENGINEERING, ASCE 7-16, & AASHTO 9TH EDITION.
2. DEAD LOADS:
   A. ROOF: PER PEMB MANUFACTURER
   B. PLATFORM FLOOR: PER PRECAST MANUFACTURER
   C. RAMP FLOOR: PER PRECAST MANUFACTURER
3. COLLATERAL LOADS:
   A. ROOF: 5 PSF (NOT TO BE COMBINED WITH WIND UPLIFT LOAD CASES)
4. UNIFORM LIVE LOADS: (ASCE 7-16)
   A. ROOF: 20 PSF (REDUCIBLE)
   B. PLATFORM FLOOR: 250 PSF IN ADDITION TO PALLET RACK POST LOADS = 10,000 LBS. EACH (SEE S-103 FOR POST LAYOUT)
   C. STAIRS: 100 PSF
5. VEHICULAR LIVE LOADS: (NOT COMBINED WITH UNIFORM LIVE LOAD OR PALLET RACK POST LOADS)
   A. RAMP & PLATFORM FLOOR: H15-44, 15 TON TRUCK WITH A 6 KIP FRONT AXLE & 24 KIP REAR AXLE SPACED 14FT APART.
   B. DESIGN LANE LOAD: 0.64 KLF (COMBINED WITH DESIGN TRUCK)
6. SNOW LOADS: (ASCE 7-16)
   A. ROOF: OMITTED (GROUND SNOW LOAD = 0 PSF)
7. WIND LOADS: (ASCE 7-16)
   A. RISK CATEGORY: IV
   B. BASIC WIND SPEED: 164 MPH
   C. ALLOWABLE STRESS DESIGN WIND SPEED VASD = 127 MPH
   D. EXPOSURE CATEGORY: D
   E. INTERNAL PRESSURE COEFFICIENT: ±0.55 (PARTIALLY ENCLOSED)
   F. THE EAVE HEIGHT USED IN WIND PRESSURE DETERMINATION SHALL ACOUNT FOR THE ELEVATED FINISHED FLOOR AND SHALL BE MEASURED FROM THE GROUND SURFACE.
8. SEISMIC LOADS: (ASCE 7-16)
   A. RISK CATEGORY: IV
   B. SEISMIC IMPORTANCE FACTOR: I_e = 1.50
   C. SITE CLASS: D - DEFAULT
   D. MAPPED SPECTRAL RESPONSE ACCELERATION PARAMETERS: S_S = 0.076g, S_1 = 0.046g
   E. SITE COEFFICIENTS: F_a = 1.6, F_v = 2.4
   F. SITE ADJUSTED SPECTRAL RESPONSE ACCELERATION PARAMETERS: S_{MS} = 0.121g, S_{M1} = 0.110g
   G. DESIGN SPECTRAL RESPONSE ACCELERATION PARAMETERS: S_{DS} = 0.081g, S_{D1} = 0.073g
   H. SEISMIC DESIGN CATEGORY: C
   I. SEISMIC LATERAL FORCE RESISTING SYSTEM:
      1. BUILDING: PER PRE-ENGINEERED METAL BUILDING MANUFACTURER
      2. PLATFORM AND RAMP: NONBUILDING STRUCTURE TYPE ALL OTHER SELF-SUPPORTING STRUCTURES (ASCE 7-16 TABLE 15.4-2).
         a. RESPONSE MODIFICATION FACTOR: R = 1.25
         b. OVERSTRENGTH FACTOR: Ω_o = 2.0
         c. DEFLECTION AMPLIFICATION FACTOR: C_d = 2.5
         d. SEISMIC RESPONSE COEFFICIENT: C_S = 0.097
9. WAVE LOADS: (ASCE 7-16)
   A. FLOOD ZONE: VE
   B. DESIGN FLOOD ELEVATION (DFE): 15.47ft (NAVD88)
10. ROOF RAIN LOADS:
    A. 15-MINUTE PRECIPITATION INTENSITY: 10.22 IN/HR
    B. 60-MINUTE PRECIPITATION INTENSITY: 6.04 IN/HR

SF - SHALLOW FOUNDATIONS:

1. SPREAD FOOTINGS ARE DESIGNED FOR AN ALLOWABLE BEARING PRESSURE OF 1200 PSF.

RS - REINFORCING STEEL:

1. REINFORCING STEEL SHALL CONFORM TO ASTM A615, GRADE 60 .
2. ALL CONTINUOUS REINFORCING STEEL SHALL BE LAPPED USING A CLASS "B" TENSION LAP.
3. ALL REINFORCING STEEL SHALL BE PLACED WITH A MINIMUM OF 2-1/2" OF CLEAR COVER, TYP. U.N.O.

CO - CONCRETE

1. ALL CONCRETE DESIGN AND WORK SHALL CONFORM TO ACI 318-14.
2. ALL CONCRETE SHALL HAVE THE FOLLOWING MINIMUM SPECIFIED 28-DAY COMPRESSIVE STRENGTH:
   A. PRECAST / PRESTRESSED CONCRETE: 6,000 PSI (MINIMUM), W/C RATIO = 0.40 (MAXIMUM)
   B. CAST-IN-PLACE CONCRETE: 5,000 PSI, W/C RATIO = 0.40 (MAXIMUM)
   C. SCOUR PROTECTION SLAB: 2,500 PSI
3. SUBMIT SHOP DRAWINGS WHICH ADEQUATELY DEPICT THE REINFORCING BAR SIZES AND PLACEMENT. WRITTEN DESCRIPTION OF REINFORCEMENT WITHOUT ADEQUATE SECTIONS, ELEVATIONS, AND DETAILS IS NOT PERMITTED.
4. A CHAMFER OF 3/4" SHALL BE MADE AT ALL EXPOSED CORNERS OF CONCRETE MEMBERS.
5. RAMP SLAB PANELS SHALL RECIEVE A TINE FINISH.
6. SHOPS BUILDING SLAB PANELS SHALL RECIEVE A STEEL TROWELLED FINISH.
7. THE PRECAST MANUFACTURER SHALL BE RESPONSIIBLE FOR THE DESIGN OF ALL PRECAST SLABS, CAP BEAMS, STRUTS, AND CONNECTIONS U.N.O.

MB - PRE-ENGINEERED METAL BUILDING

1. ALL STRUCTURAL STEEL, FRAMES, PURLINS, GIRTS, SOFFITS, DECK, WALL SIDING, ETC. SHALL BE DESIGNED AND FABRICATED BY THE METAL BUILDING MANUFACTURER IN ACCORDANCE WITH ALL APPLICABLE CODES.
2. THE CONTRACTOR SHALL BE RESPONSIBLE FOR ALL COORDINATION AND ERECTION OF THE PRE-ENGINEERED METAL BUILDING SUPERSTRUCTURE INCLUDING DIMENSIONAL ACCURACY, COLUMN BASE PLATES AND ANCHORAGE.
3. THE PRIMARY AND SECONDARY PRE-ENGINEERED METAL BUILDING COMPONENTS SHALL BE DESIGNED TO SUPPORT THE LOADS FROM ALL MECHANICAL, ELECTRICAL, AND PLUMBING EQUIPMENT SHOWN IN THE CONTRACT DOCUMENTS.
4. ALL FRAMES, GIRTS, PURLINS, BASE PLATES, ETC. SHALL BE HOT-DIPPED GALVANIZED.
5. THE PEMB MANUFACTURER SHALL PROVIDE COLUMN REACTIONS AND ANCHOR BOLT LAYOUT PRIOR TO FINAL DESIGN AND CASTING OF THE PRECAST CONCRETE SUBSTRUCTURE.

SS - STRUCTURAL STEEL

1. STRUCTURAL STEEL SHALL CONFORM TO FOLLOWING U.N.O.:
   A. ROLLED SHAPES: ASTM A992
   B. PLATES: ASTM A36 (MINIMUM)
   C. ANGLES: ASTM A36 (MINIMUM)
   D. PIPE: ASTM A53, GR. B
   E. HSS: ASTM A500, GR. C
   F. CHANNELS: ASTM A36
2. BOLTS AND ANCHORS:
   A. BOLTED CONNECTIONS SHALL BE BEARING TYPE WITH 3/4" DIAMETER ASTM F3125, GRADE A325 BOLTS, GALVANIZED, U.N.O.
   B. ANCHOR RODS SHALL BE HEADED TYPE CONFORMING TO ASTM F1554-36, GALVANIZED, U.N.O.
3. STRUCTURAL STEEL SHALL BE FABRICATED AND ERECTED ACCORDING TO THE AISC 15TH EDITION STEEL CONSTRUCTION MANUAL.
4. SUBMIT SHOP DRAWINGS WHICH ADEQUATELY DEPICT THE STRUCTURAL ELEMENTS AND CONNECTIONS SHOWN IN THE CONTRACT DOCUMENTS.
5. USE PREQUALIFIED WELDED JOINTS PER AISC AND AWS D1.1 OF THE AMERICAN WELDING SOCIETY. "NON PREQUALIFIED JOINTS" SHALL BE QUALIFIED PRIOR TO FABRICATION.
6. ALL WELDING SHALL BE PERFORMED USING E70XX SERIES LOW HYDROGEN ELECTRODES.
7. HOLES FOR BOLTING SHALL BE SHOP PUNCHED OR FIELD DRILLED. THE MAKING OF HOLES OR ENLARGEMENT OF HOLES BY BURNING WILL NOT BE PERMITTED. ALL HOLES SHALL BE STANDARDIZED, UNLESS NOTED OTHERWISE.
8. ALL STEEL SHALL BE HOT-DIPPED GALVANIZED PER ASTM A123 AND REPAIRED IN THE FIELD AFTER ERECTION AS NECESSARY.
9. ALL WELDING SHALL BE ACCOMPLISHED IN ACCORDANCE TO AWS D1.1 USING COMPATIBLE MATERIALS FOR WELDING GALVANIZED MATERIAL.
10. ALL GROOVE WELDS SHALL BE CJP WELDS, U.N.O.

COMPONENT & CLADDING WIND PRESSURES

ZONE	AREA (SF)	PRESSURE (PSF)
1 & 2e	10	+76, -178
	50	+65, -119
	100	+60, -74
	200	+60, -74
2n, 2r, 3e	10	+76, -247
	50	+65, -178
	100	+60, -148
	200	+60, -118
3r	10	+76, -289
	50	+65, -202
	100	+60, -164
	200	+60, -164
4	10	+108, -115
	50	+100, -107
	100	+96, -103
	200	+92, -99
5	10	+108, -136
	50	+100, -119
	100	+96, -112
	200	+92, -104

NOTES:

1. WIND PRESSURES SHOWN ARE ULTIMATE PRESSURES.
2. PLUS AND MINUS SIGNS SIGNIFY PRESSURES ACTING TOWARD AND AWAY FROM SURFACES, RESPECTIVELY.
3. DISTANCE a = 4 FT.

ABBREVIATIONS:

BRG.	BEARING
BTM.	BOTTOM
C.D.	CONTROL DIMENSION
CJP	COMPLETE JOINT PENETRATION
C.L.	CENTERLINE
CONT.	CONTINUOUS
DFE	DESIGN FLOOD ELEVATION
DIA.	DIAMETER
DIAG.	DIAGONAL
EA.	EACH
FCM	FRACTURE CRITICAL MEMBER
GALV.	GALVANIZED
HORIZ.	HORIZONTAL
HSA	HEADED STUD ANCHOR
MAX.	MAXIMUM
MIN.	MINIMUM
O.F.	OUTSIDE FACE
O.C.	ON-CENTER
PEMB	PRE-ENGINEERED METAL BUILDING
PL.	PLATE
R	RADIUS
SIM.	SIMILAR
SS	STAINLESS STEEL
SQ.	SQUARE
STIFF.	STIFFENER
TYP.	TYPICAL
U.N.O.	UNLESS NOTED OTHERWISE
VERT.	VERTICAL
V.I.F.	VERIFY IN FIELD
W.P.	WORK POINT
@	AT

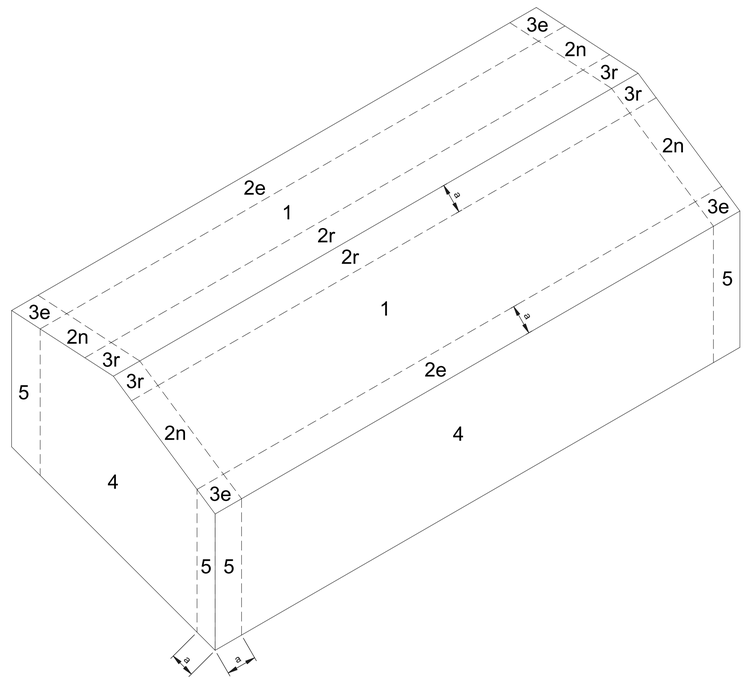

US Army Corps of Engineers ®

MARK	DESCRIPTION	DATE

ISSUE DATE: JUNE 2023
SOLICITATION NO.: W912P8-23-B-0061
CONTRACT NO.: WXXXXX-XX-X-XXXX

DESIGNED BY: ADAM BELEW, PE
DRAWN BY: ADAM BELEW, PE
CHECKED BY: TARRIS GREER, PE
SUBMITTED BY: LAUREN D'ARMOND, PE
ZONE: ANSI D

US ARMY CORPS OF ENGINEERS
NEW ORLEANS DISTRICT
NEW ORLEANS, LA

FRESHWATER BAYOU WATERWAY
FRESHWATER BAYOU LOCK
NEW SHOPS BUILDING
VERMILION PARRISH, LA
GENERAL NOTES

SHEET ID
S-001

READY FOR ADVERTISEMENT

PILE SCHEDULE		
LOCATION	HEAD EL.	TIP EL.
P1	2.25	-53.00
P2	3.60	-53.00
P3	5.27	-53.00
P4	6.95	-53.00
P5	8.63	-53.00
P6	10.30	-53.00
P7	11.98	-53.00
P8	13.65	-53.00
P9	15.30	-53.00
P10 - P18	16.42	-53.00

GENERAL NOTES

1. SEE SPECIFICATION SECTION 31 62 13.20 AND DRAWING S-501 FOR PILES SPECIFCATIONS AND DETAILS.
2. THE DESIGN PILE SERVICE LOAD IS **105 KIPS**.
3. IN ADDITION TO HANDLING STRESSES, DESIGN PILES FOR LRFD FLEXURE AND SHEAR (Mu = 1,635in-k, Vu-20^k)
4. THE TEST PILE INDICATED ON PLAN SHALL BE LOAD TESTED TO 200% OF THE SERVICE LOAD NOTED ABOVE. SEE SPECIFICATION SECTION 31 62 14.00 FOR PILE LOAD TEST REQUIREMENTS.
5. THE PILE HEAD ELEVATION SHOWN IN THE PILE SCHEDULE IS BASED ON THE BOTTOM OF PRECAST CAP BEAM ELEVATION. THE FINAL PILE HEAD ELEVATION SHALL BE COORDINATED WITH THE FINAL PRECAST CAP BEAM DEPTH.

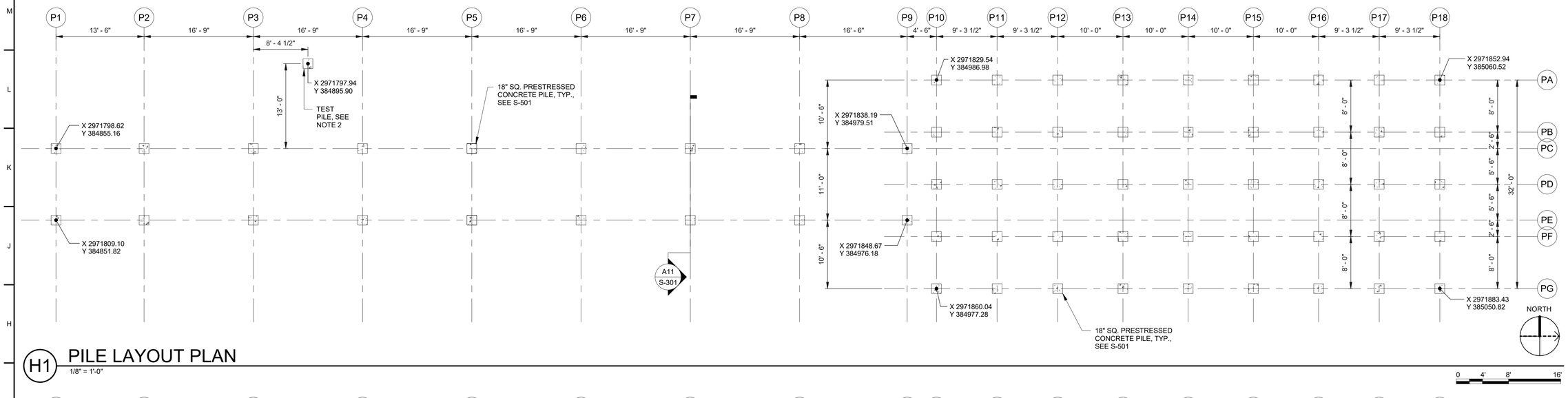

H1 PILE LAYOUT PLAN

1/8" = 1'-0"

0 4' 8' 16'

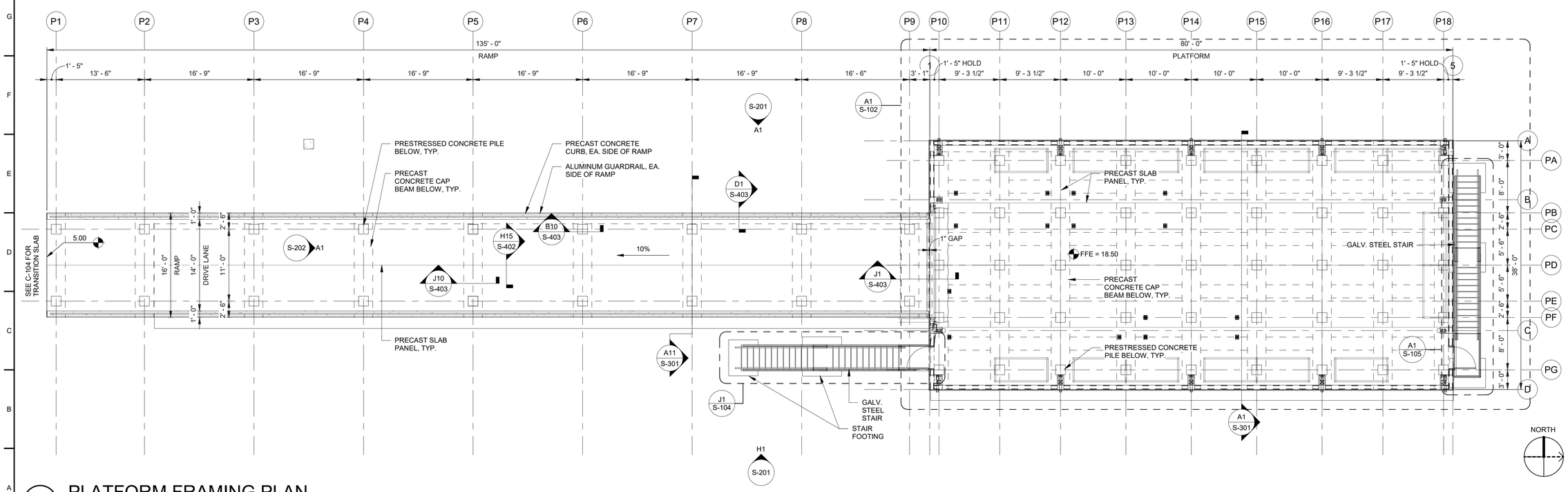

A1 PLATFORM FRAMING PLAN

1/8" = 1'-0"

0 4' 8' 16'

US Army Corps of Engineers ®

MARK	DESCRIPTION	DATE

DESIGNED BY: ADAM BELEW, PE
DRAWN BY: ADAM BELEW, PE
CHECKED BY: TARRIS GREER, PE
SUBMITTED BY: LAUREN DARMOND, PE
ISSUE DATE: JUNE 2023
SOLICITATION NO.: W912P8-23-B-0061
CONTRACT NO.: WXXXXX-XX-X-XXXX
LOA: ANSI D

US ARMY CORPS OF ENGINEERS
NEW ORLEANS DISTRICT
NEW ORLEANS, LA

FRESHWATER BAYOU WATERWAY
FRESHWATER BAYOU LOCK
NEW SHOPS BUILDING
VERMILION PARRISH, LA

OVERALL PILE LAYOUT AND PLATFORM FRAMING PLANS

SHEET ID

S-101

READY FOR ADVERTISEMENT

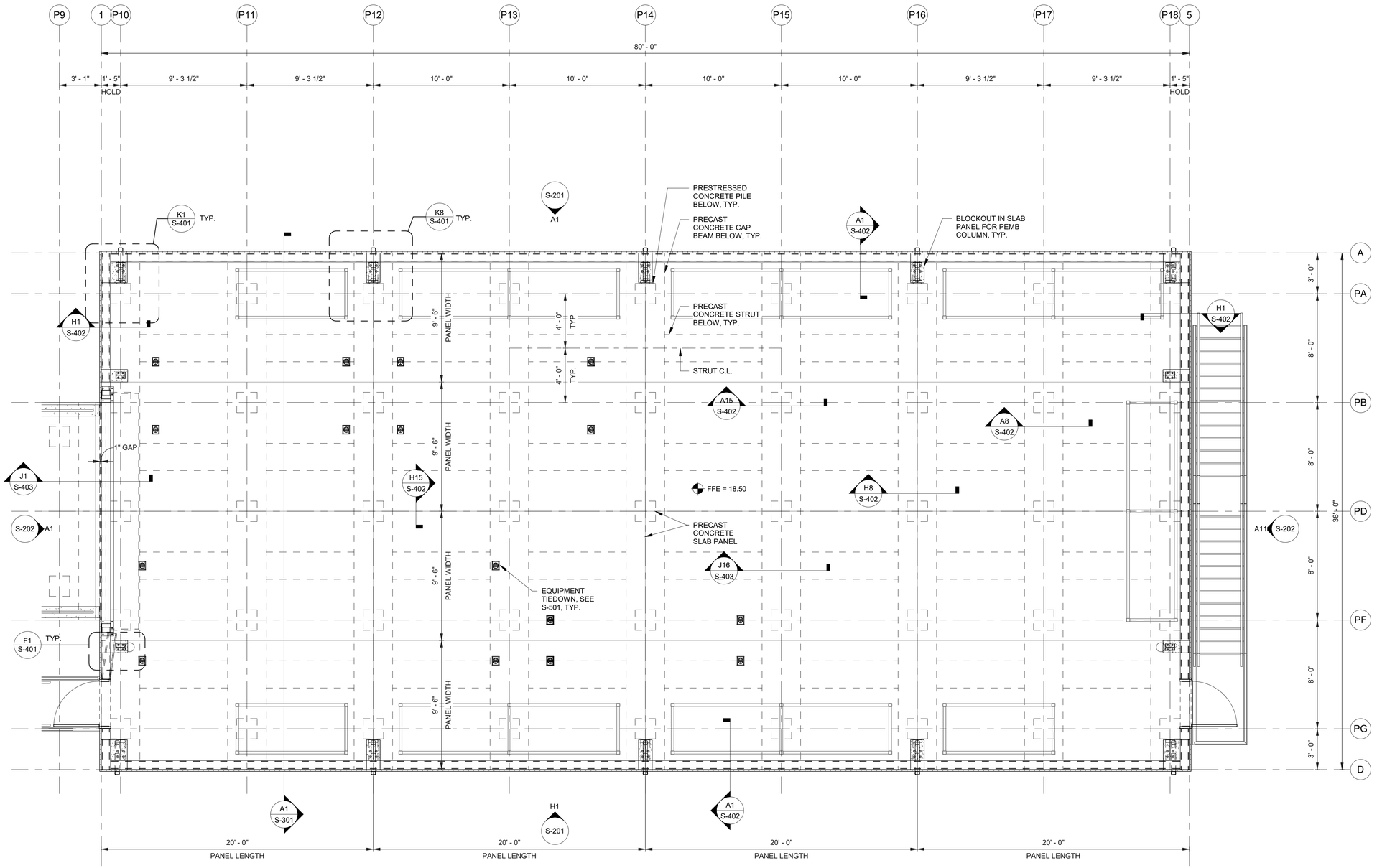

NORTH

0 2' 4' 8'

A1 ENLARGED PLATFORM FRAMING PLAN

1/4" = 1'-0"

US Army Corps of Engineers ®

MARK	DESCRIPTION	DATE

DESIGNED BY: ADAM BELEW, PE
DRAWN BY: ADAM BELEW, PE
CHECKED BY: TARRIS GREER, PE
SUBMITTED BY: LAUREN DARMOND, PE
QA/QC BY: ANSLD
ISSUE DATE: JUNE 2023
SOLICITATION NO.: W912P8-23-B-0061
CONTRACT NO.: WXXXXX-XX-X-XXXX

US ARMY CORPS OF ENGINEERS
NEW ORLEANS DISTRICT
NEW ORLEANS, LA

FRESHWATER BAYOU WATERWAY
FRESHWATER BAYOU LOCK
NEW SHOPS BUILDING
VERMILION PARRISH, LA

ENLARGED PLATFORM FRAMING PLAN

SHEET ID
S-102

READY FOR ADVERTISEMENT

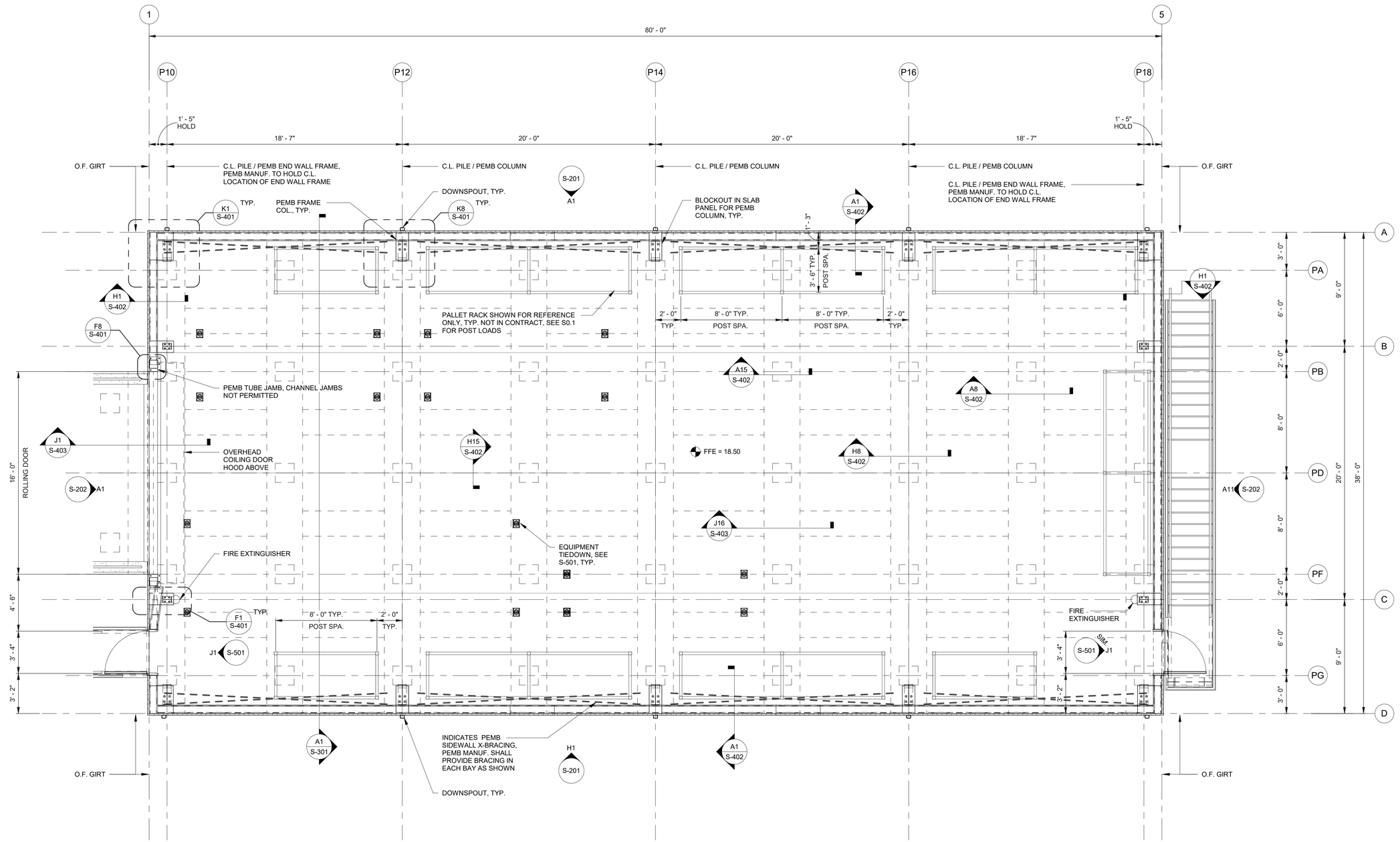

NORTH

0 2' 4' 8'

A1 FLOOR PLAN

1/4" = 1'-0"

US Army Corps of Engineers ®

MARK	DESCRIPTION	DATE

DESIGNED BY: ADAM BELEW, PE
DRAWN BY: ADAM BELEW, PE
CHECKED BY: TARRIS GREER, PE
SUBMITTED BY: LAUREN DARMOND, PE
ZONE: ANSI D
ISSUE DATE: JUNE 2023
SOLICITATION NO.: W912P8-23-B-0061
CONTRACT NO.: WXXXXX-XX-X-XXXX

US ARMY CORPS OF ENGINEERS
NEW ORLEANS DISTRICT
NEW ORLEANS, LA

FRESHWATER BAYOU WATERWAY
FRESHWATER BAYOU LOCK
NEW SHOPS BUILDING
VERMILION PARRISH, LA
FLOOR PLAN

SHEET ID
S-103

READY FOR ADVERTISEMENT

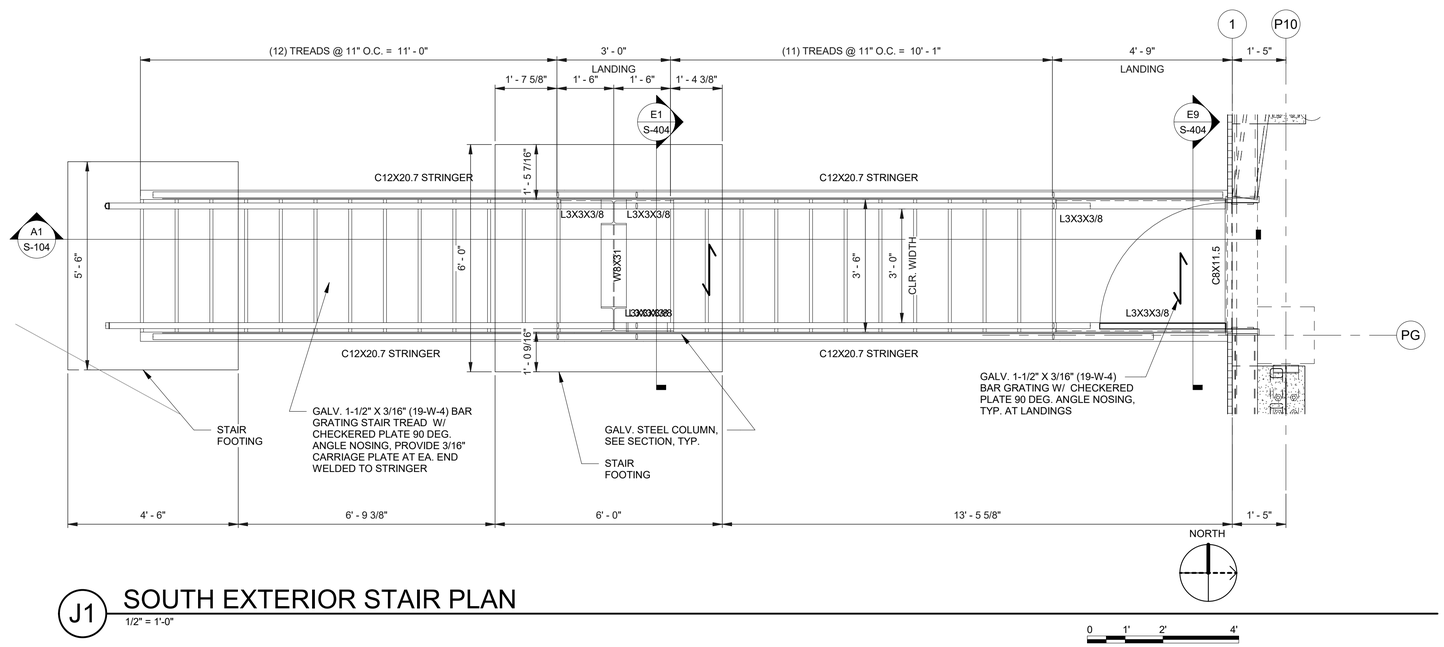

J1 SOUTH EXTERIOR STAIR PLAN

1/2" = 1'-0"

0 1' 2' 4'

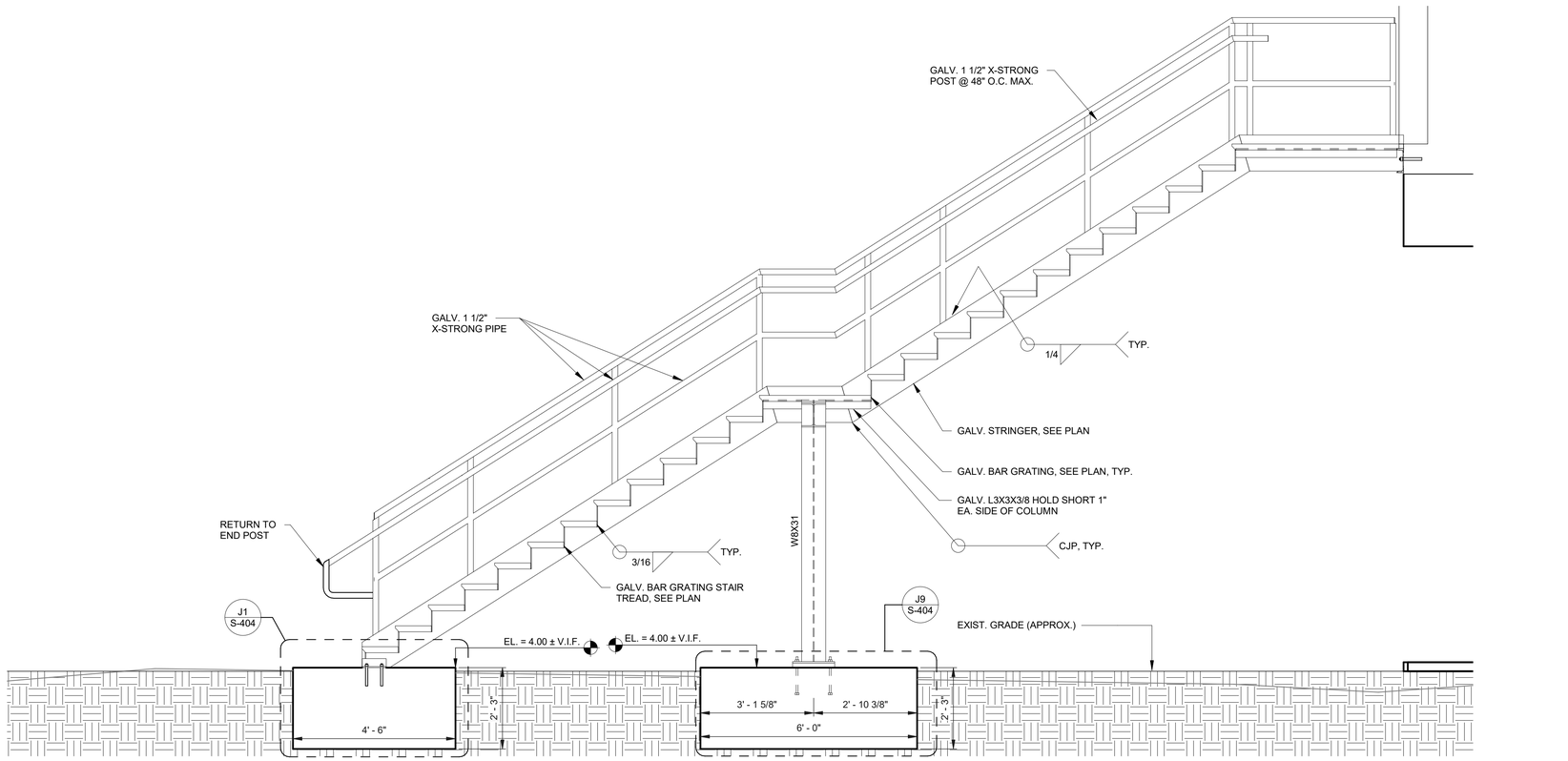

A1 SOUTH STAIR SECTION

1/2" = 1'-0"

0 1' 2' 4'

GENERAL NOTES

1. ALL STAIR FRAMING, GRATING, RAILING, AND HARDWARE SHALL BE HOT DIPPED GALVANIZED.

US Army Corps of Engineers ®

MARK	DESCRIPTION	DATE

DESIGNED BY: ADAM BELEW, PE
DRAWN BY: ADAM BELEW, PE
CHECKED BY: TARRIS GREER, PE
SUBMITTED BY: LAUREN D'ARMOND, PE
SIZE: ANSI D

ISSUE DATE: JUNE 2023
SOLICITATION NO.: W912P8-23-B-0061
CONTRACT NO.: WXXXXX-XX-X-XXXX

US ARMY CORPS OF ENGINEERS
NEW ORLEANS DISTRICT
NEW ORLEANS, LA

FRESHWATER BAYOU WATERWAY
FRESHWATER BAYOU LOCK
NEW SHOPS BUILDING
VERMILION PARRISH, LA

SOUTH STAIR PLAN AND SECTION

SHEET ID
S-104

READY FOR ADVERTISEMENT

GENERAL NOTES

1. ALL STAIR FRAMING, GRATING, RAILING, AND HARDWARE SHALL BE HOT DIPPED GALVANIZED.

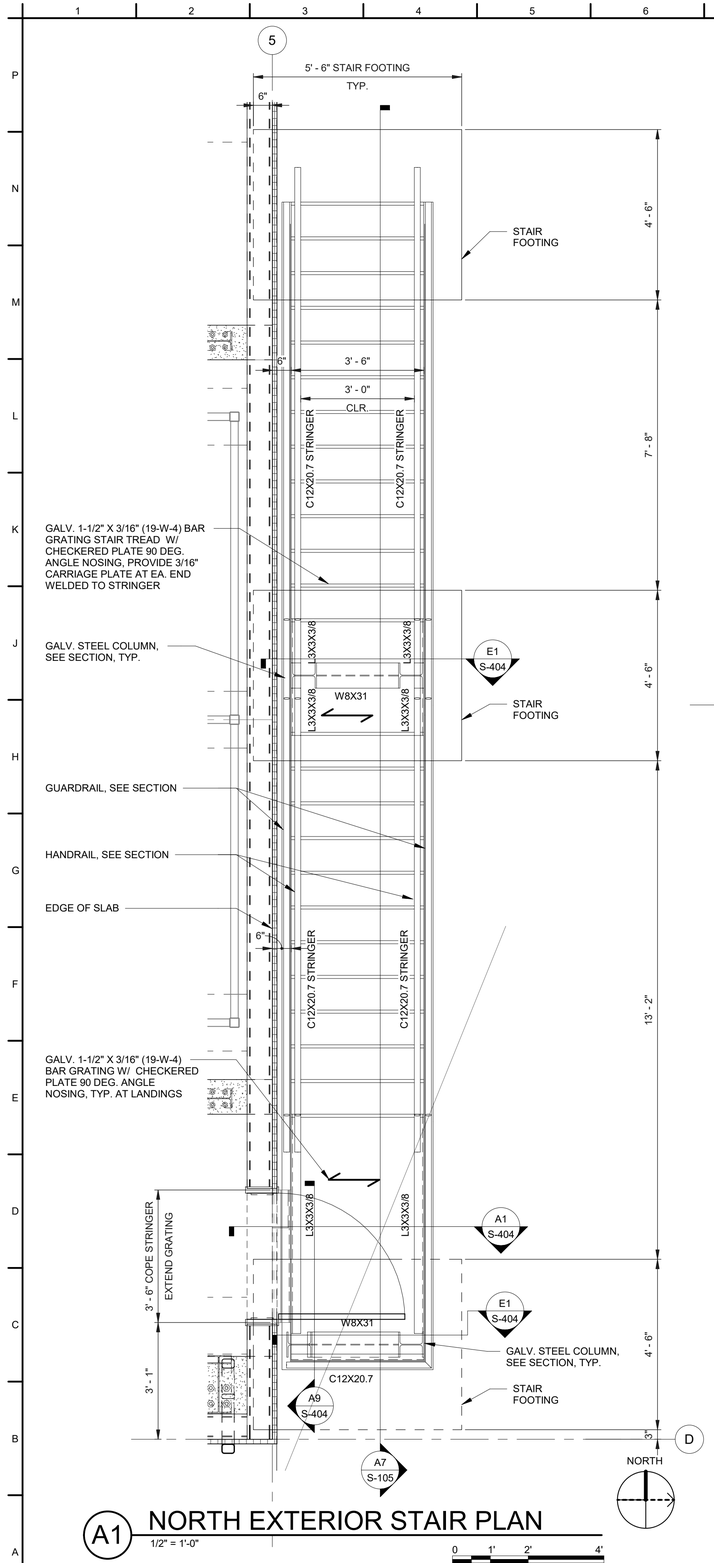

A1 NORTH EXTERIOR STAIR PLAN

1/2" = 1'-0"

0 1' 2' 4'

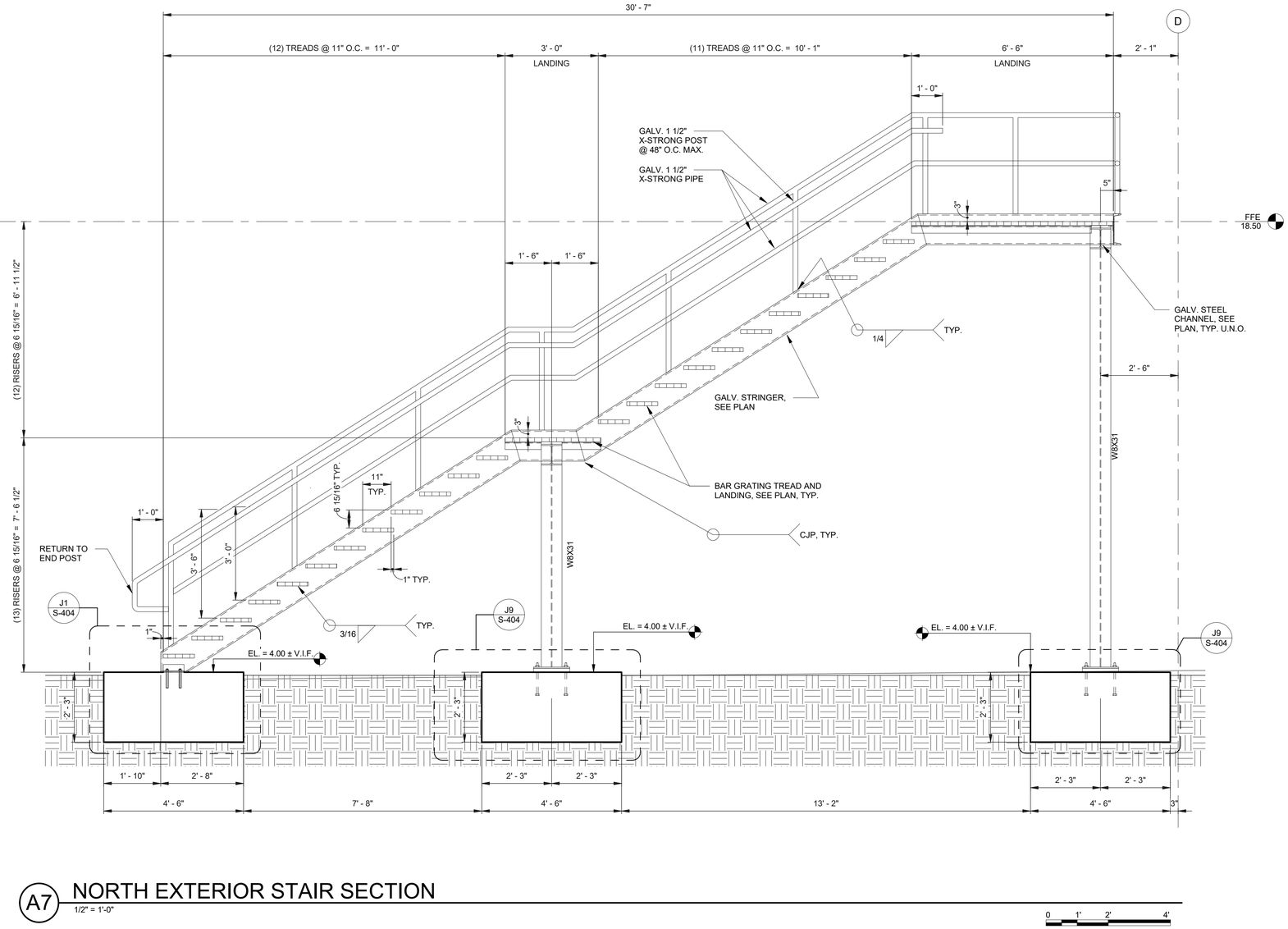

A7 NORTH EXTERIOR STAIR SECTION

1/2" = 1'-0"

0 1' 2' 4'

US Army Corps of Engineers ®

MARK	DESCRIPTION	DATE

ISSUE DATE:	JUNE 2023
SOLICITATION NO.:	W912P8-23-B-0061
CONTRACT NO.:	WXXXXX-XX-X-XXXX
DESIGNED BY:	ADAM BELEW, PE
DRAWN BY:	ADAM BELEW, PE
CHECKED BY:	TARRIS GREER, PE
SUBMITTED BY:	LAUREN DARMOND, PE
SIZE:	ANSI D

US ARMY CORPS OF ENGINEERS
NEW ORLEANS DISTRICT
NEW ORLEANS, LA

FRESHWATER BAYOU WATERWAY
FRESHWATER BAYOU LOCK
NEW SHOPS BUILDING
VERMILION PARRISH, LA

NORTH STAIR PLAN AND SECTION

SHEET ID

S-105

READY FOR ADVERTISEMENT

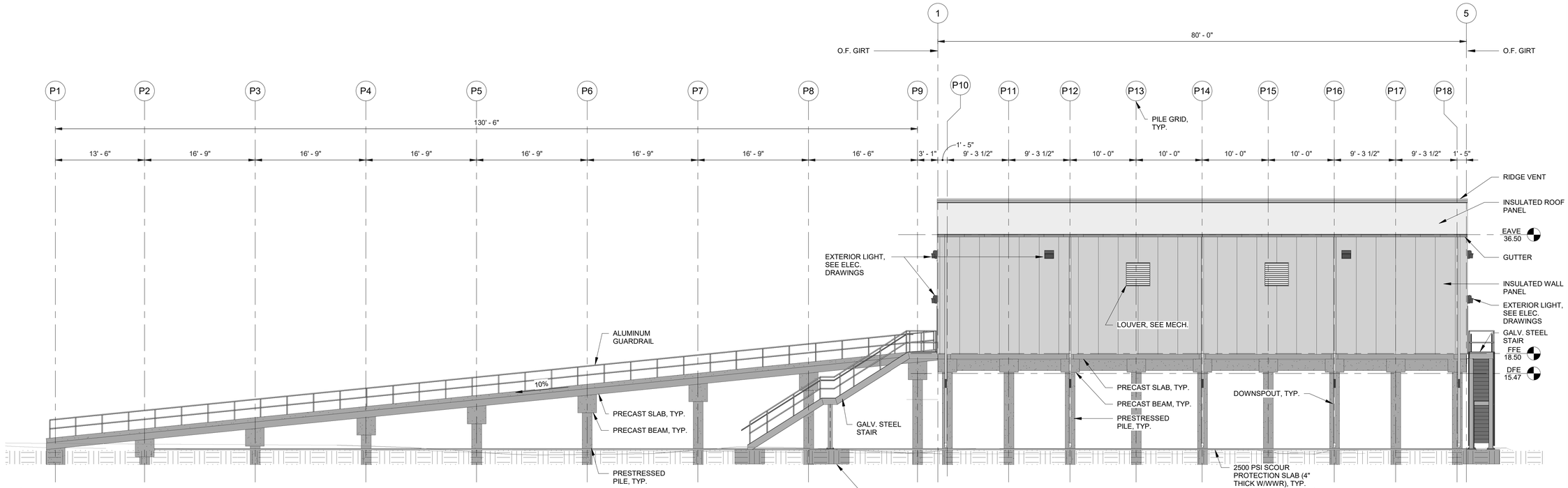

H1 EAST EXTERIOR ELEVATION

1/8" = 1'-0"

0 4' 8' 16'

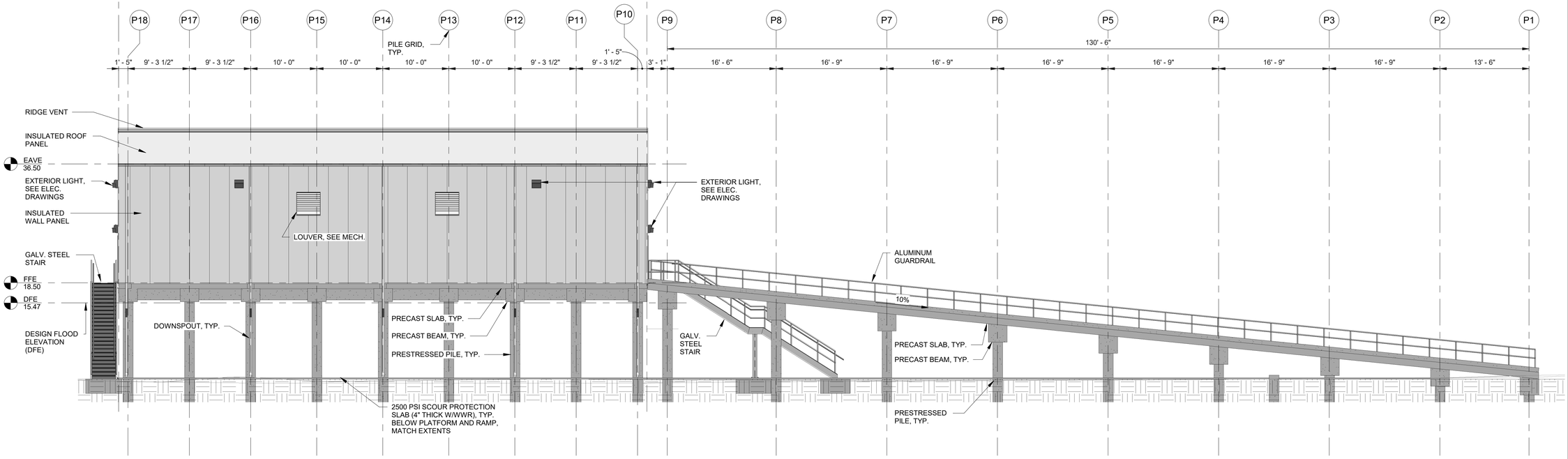

A1 WEST EXTERIOR ELEVATION

1/8" = 1'-0"

0 4' 8' 16'

US Army Corps of Engineers ®

MARK	DESCRIPTION	DATE

DESIGNED BY: ADAM BELEW, PE
DRAWN BY: ADAM BELEW, PE
CHECKED BY: TARRIS GREER, PE
SUBMITTED BY: LAUREN DARMOND, PE
SIZE: ANSI D
ISSUE DATE: JUNE 2023
SOLICITATION NO.: W912P6-23-B-0061
CONTRACT NO.: WXXXXX-XX-X-XXXX

US ARMY CORPS OF ENGINEERS
NEW ORLEANS DISTRICT
NEW ORLEANS, LA

FRESHWATER BAYOU WATERWAY
FRESHWATER BAYOU LOCK
NEW SHOPS BUILDING
VERMILION PARRISH, LA

EAST AND WEST EXTERIOR ELEVATIONS

SHEET ID

S-201

READY FOR ADVERTISEMENT

GENERAL NOTES

1. OVERHEAD COILING DOOR SHALL BE TESTED IN ACCORDANCE WITH ANSI/DASMA 108, STANDARD METHOD FOR TESTING SECTIONAL GARAGE DOORS AND ROLLING DOORS. SEE SPECIFICATION SECTION 08 33 23.

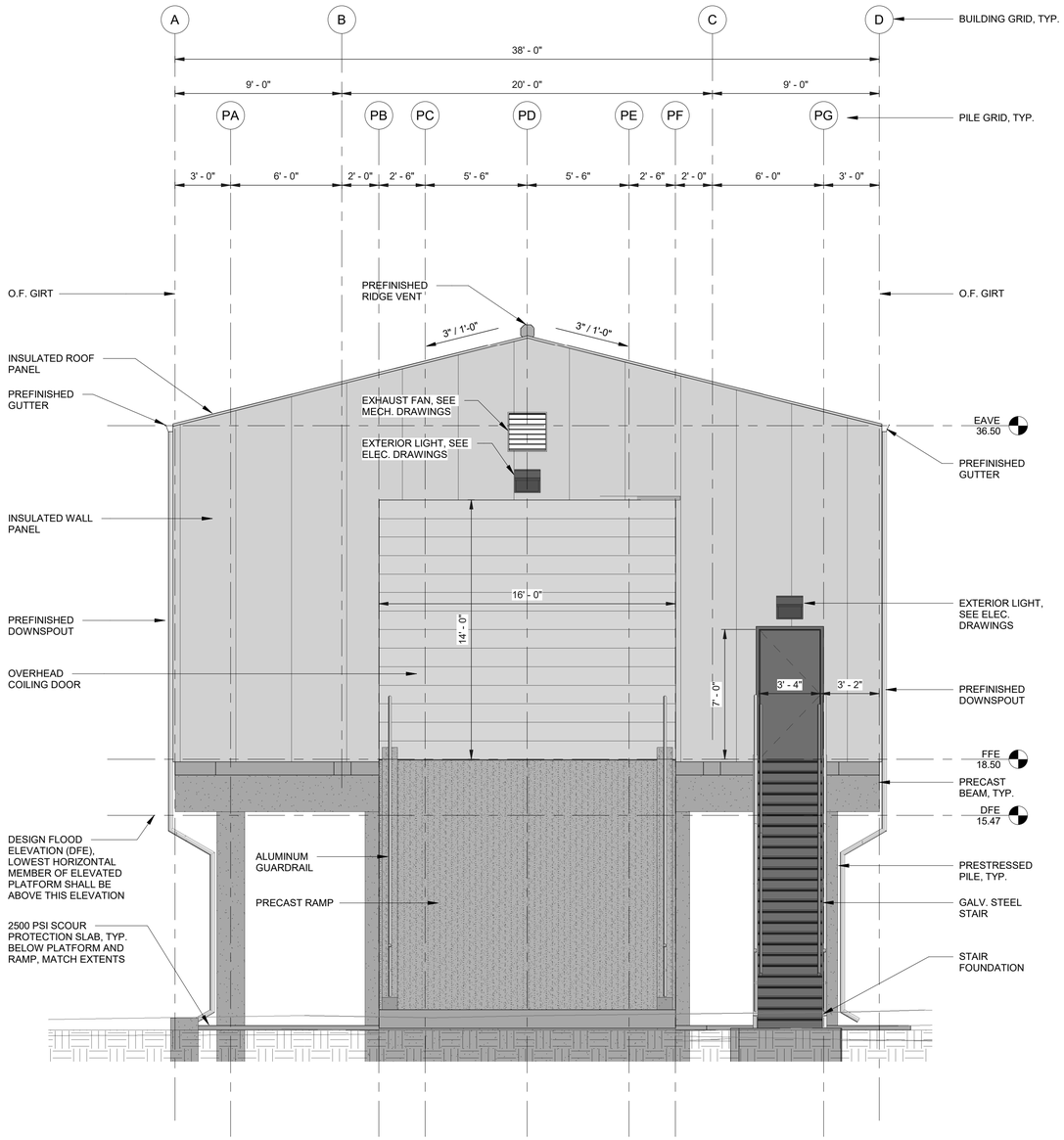

A1 SOUTH EXTERIOR ELEVATION

1/4" = 1'-0"

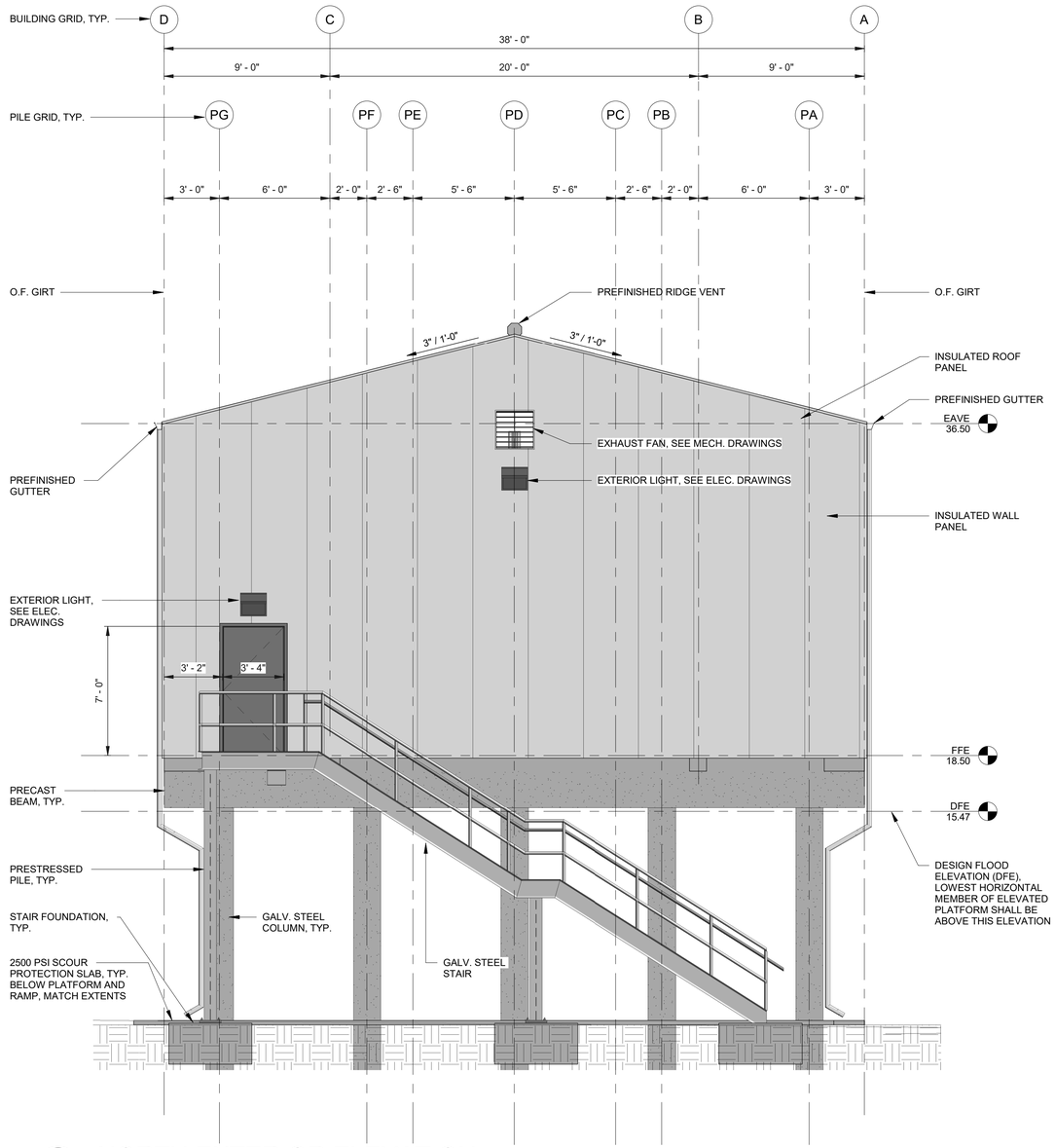

A11 NORTH EXTERIOR ELEVATION

1/4" = 1'-0"

US Army Corps of Engineers ®

MARK	DESCRIPTION	DATE

DESIGNED BY: ADAM BELEW, PE
DRAWN BY: ADAM BELEW, PE
CHECKED BY: TARRIS GREER, PE
SUBMITTED BY: LAUREN DARMOND, PE
ISSUE DATE: JUNE 2023
SOLICITATION NO.: W912P8-23-B-0061
CONTRACT NO.: WXXXXX-XX-X-XXXX
LEVEL OF DETAIL: ANSI D

US ARMY CORPS OF ENGINEERS
NEW ORLEANS DISTRICT
NEW ORLEANS, LA

FRESHWATER BAYOU WATERWAY
FRESHWATER BAYOU LOCK
NEW SHOPS BUILDING
VERMILION PARRISH, LA

NORTH AND SOUTH EXTERIOR ELEVATIONS

SHEET ID

S-202

READY FOR ADVERTISEMENT

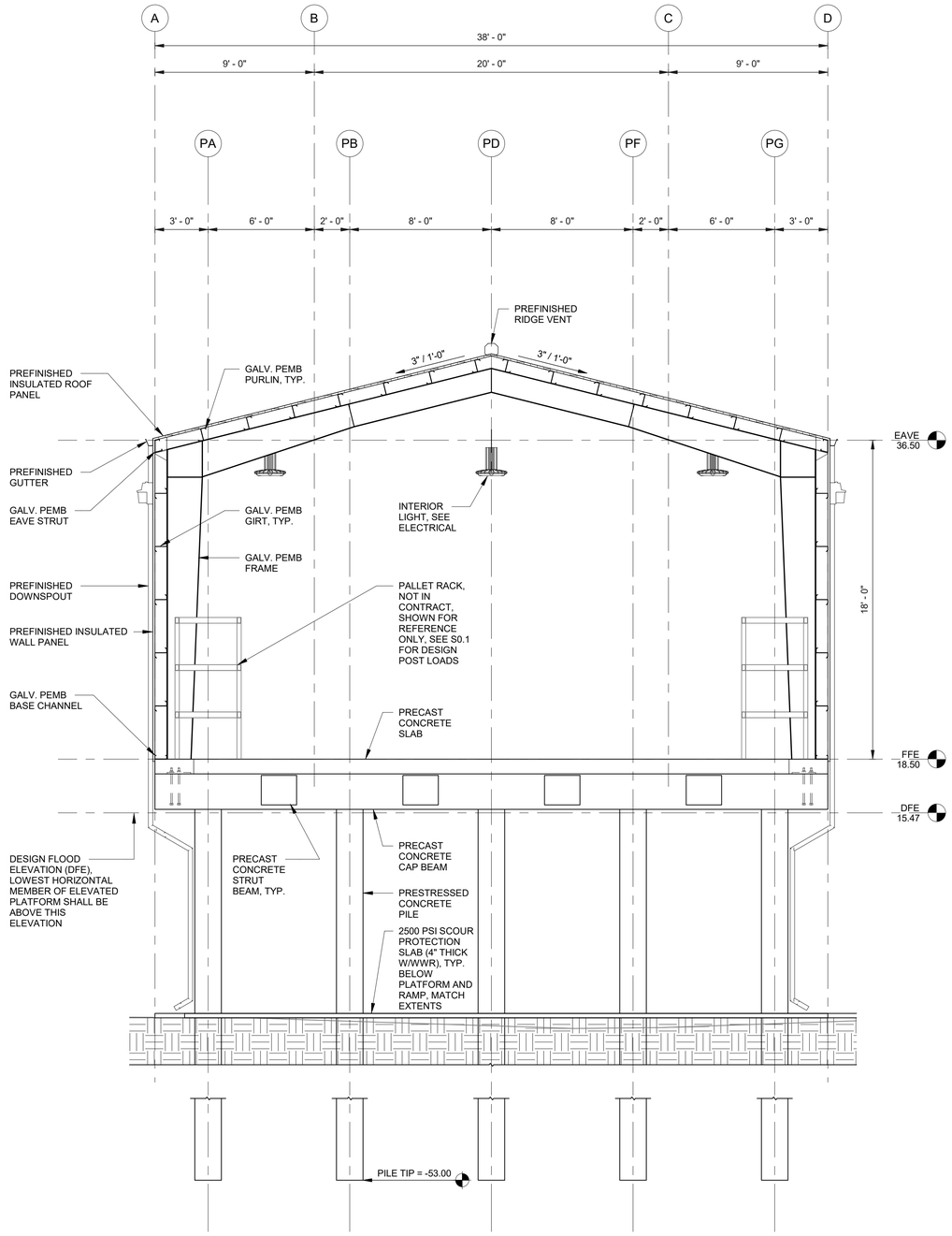

A1 BUILDING CROSS SECTION

1/4" = 1'-0"

0 2' 4' 8'

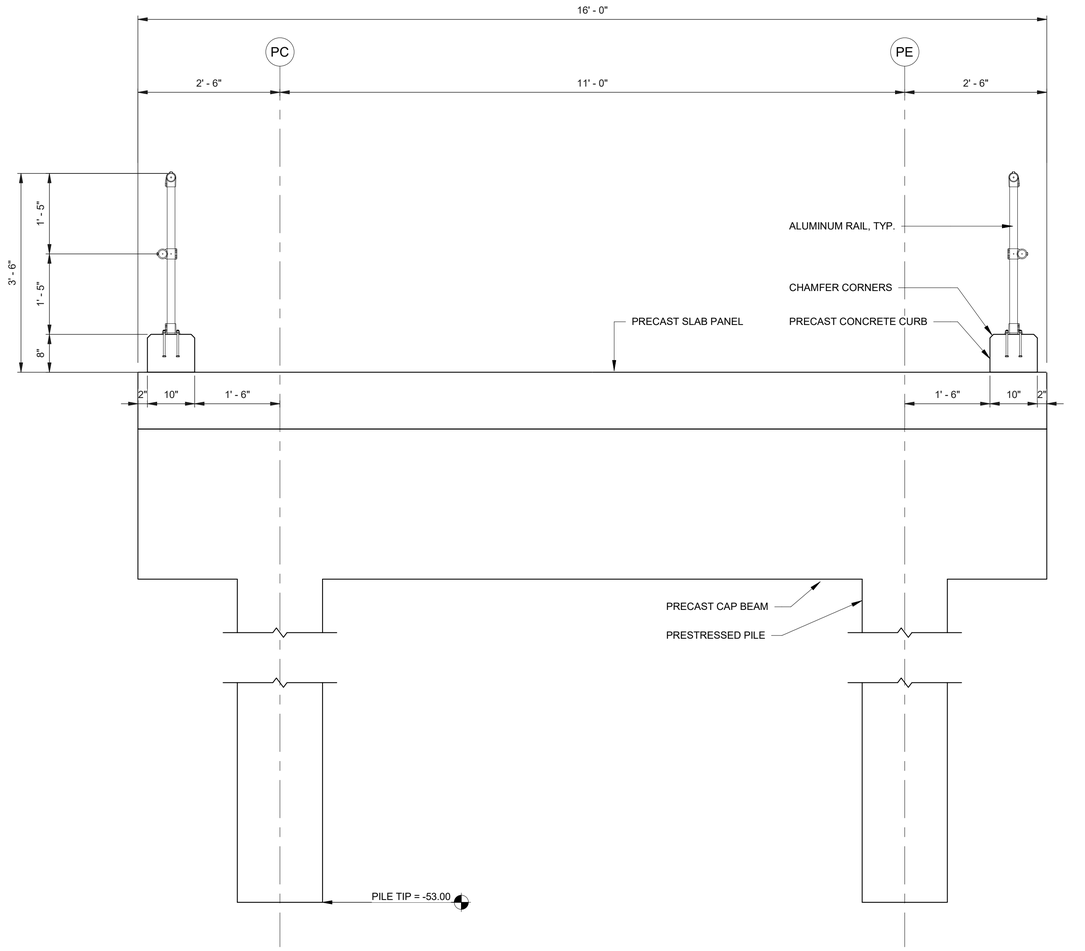

A11 RAMP CROSS SECTION

3/4" = 1'-0"

0 0.5' 1' 2' 3'

US Army Corps of Engineers ®

MARK	DESCRIPTION	DATE

ISSUE DATE:	JUNE 2023
SOLICITATION NO.:	W912P8-23-B-0061
CONTRACT NO.:	WXXXXX-XX-X-XXXX
DESIGNED BY:	ADAM BELEW, PE
DRAWN BY:	ADAM BELEW, PE
CHECKED BY:	TARRIS GREER, PE
SUBMITTED BY:	LAUREN D'ARMOND, PE
SIZE:	ANSI D

US ARMY CORPS OF ENGINEERS
NEW ORLEANS DISTRICT
NEW ORLEANS, LA

FRESHWATER BAYOU WATERWAY
FRESHWATER BAYOU LOCK
NEW SHOPS BUILDING
VERMILION PARRISH, LA

BUILDING AND RAMP CROSS SECTIONS

SHEET ID

S-301

READY FOR ADVERTISEMENT

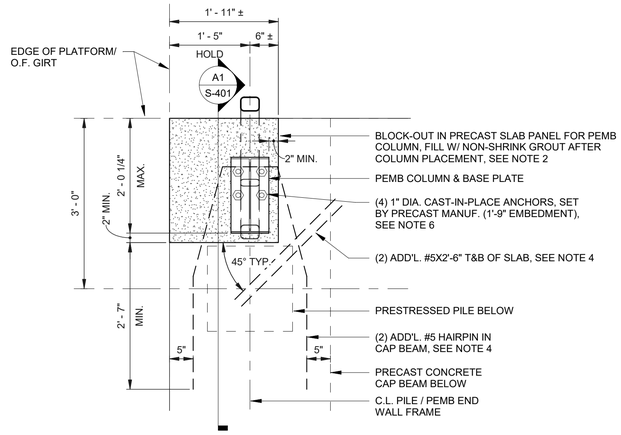

K1 ENLARGED PLAN AT PLATFORM CORNER COLUMN

3/4" = 1'-0"

0 0.5' 1' 2' 3'

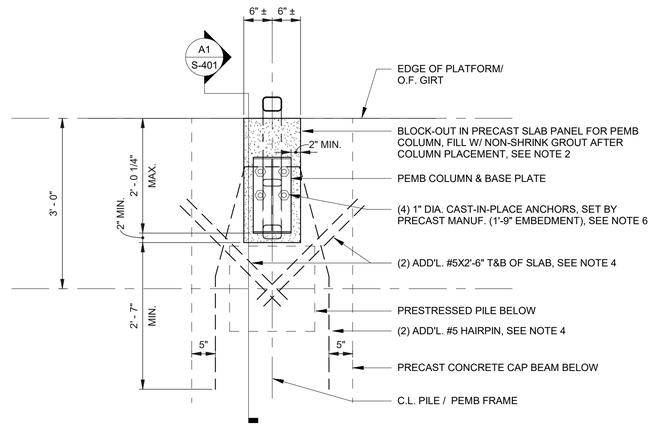

K8 ENLARGED PLAN AT PLATFORM SIDEWALL COLUMN

3/4" = 1'-0"

0 0.5' 1' 2' 3'

F1 ENLARGED PLAN AT PLATFORM ENDWALL COLUMN

3/4" = 1'-0"

0 0.5' 1' 2' 3'

F8 ENLARGED PLAN AT JAMB COLUMN

3/4" = 1'-0"

0 0.5' 1' 2' 3'

A1 SECTION AT PEMB FRAME COLUMN

3/4" = 1'-0"

0 0.5' 1' 2' 3'

A8 SECTION AT ENDWALL COLUMN

3/4" = 1'-0"

0 0.5' 1' 2' 3'

GENERAL NOTES

1. PRIOR TO CONSTRUCTION THE CONTRACTOR SHALL SUBMIT THE PRE-ENGINEERING METAL BUILDING (PEMB) SYSTEM SHOP DRAWINGS, INCLUDING ANCHOR BOLT LAYOUT AND COLUMN BASE REACTIONS, FOR APPROVAL BY THE COR. THE CONTRACTOR SHALL PROVIDE THE COR APPROVED PEMB SYSTEM SUBMITTAL TO THE PRECAST MANUFACTURER PRIOR TO THEIR DESIGN / SUBMITTAL OF THE PRECAST ELEVATED PLATFORM FRAMING. SUBMISSION OF THE PRECAST ELEVATED PLATFORM FRAMING PRIOR TO COR APPROVAL OF THE PEMB SYSTEM IS NOT PERMITTED. THE CONTRACTOR IS RESPONSIBLE FOR COORDINATION BETWEEN THE PEMB MANUFACTURER AND THE PRECAST MANUFACTURER.
2. BLOCKOUTS ARE REQUIRED IN THE PRECAST SLAB PANELS TO ALLOW FOR THE PEMB COLUMNS TO BEAR AND ANCHOR TO THE TOP OF THE PRECAST CAP BEAMS. THE SIZE OF THE BLOCKOUTS SHOWN ARE EXPECTED SIZES AND ARE DEPENDENT ON THE FINAL PEMB COLUMN BASE PLATE SIZE. THE PRECAST MANUFACTURER SHALL COORDINATED THE REQUIRED BLOCKOUT SIZE WITH THE APPROVED PEMB SUBMITTAL PRIOR TO SUBMITTING SHOP DRAWINGS. THE BLOCKOUT SHALL BE OFFSET FROM THE PEMB COLUMN BASE PLATE 2" MIN AS SHOWN IN THE DETAILS ON THIS SHEET.
3. THE PRECAST MANUFACTURER SHALL DESIGN THE CAP BEAMS FOR THE EXPECTED PEMB COLUMN REACTIONS SHOWN IN THE TABLE BELOW IN ADDITION TO THE LOADS SHOWN ON DRAWING S-001. THE REACTIONS SHOWN ARE ESTIMATED AND ARE FOR ESTIMATING PURPOSES ONLY. FINAL COLUMN REACTIONS SHALL BE PROVIDED BY THE PEMB MANUFACTURER. SEE NOTE 10 FOR EXPECTED MAXIMUM CAP BEAM DESIGN MOMENT AND SHEAR.
4. PRECAST ELEMENTS, INCLUDING REINFORCEMENT AND CONNECTIONS, NOT SPECIFCALLY DESIGNED AND DETAILED ARE TO BE DESIGNED BY THE PRECAST MANUFACTURER . WHERE ADDITIONAL (ADD'L.) REINFORCEMENT IS NOTED IN THE PRECAST ELEMENTS, THE PRECAST MANUFACTURER SHALL PROVIDE THE SPECIFIED REINFORCEMENT IN ADDITION TO THE REINFORCEMENT REQUIRED BY THEIR DESIGN.
5. THE FINISHED FLOOR ELEVATION OF THE ELEVATED PLATFORM = EL. 18.50. THE BOTTOM OF THE PEMB COLUMN BASE PLATE IS AT EL. 17.67 U.N.O.
6. COLUMN ANCHORAGE EMBEDMENT SHOWN IS BASED ON THE EXPECTED PEMB REACTIONS AND IS FOR ESTIMATING PURPOSES ONLY. REVISIONS TO ANCHORAGE EMBEDMENT WILL BE PROVIDED BY THE COR AS NECESSARY AFTER APPROVAL OF THE PEMB SUBMITTAL.
7. ALL COLUMN ANCHOR BOLTS SHALL BE CAST-IN-PLACE AND SET BY THE PRECAST MANUFACTURER, U.N.O. ANCHOR BOLTS SHALL BE ASTM F1554 GR. 36 WITH A HEAVY HEX HEAD ON THE EMBEDDED END. SECURE THE COLUMN BASE PLATE TO THE ANCHOR BOLTS WITH (1) FLAT WASHER AND (1) HEX NUT. ANCHOR BOLTS SHALL BE GALVANIZED.
8. ALL REINFORCEMENT SHALL HAVE 2-1/2" OF CLEAR COVER, TYP. U.N.O.
9. DIMENSIONS TAGGED WITH "HOLD" ARE INTENDED TO BE WITHOUT VARIATION IN BOTH PREACST AND PEMB VENDOR DESIGNS. VARIATION FROM THESE "HOLD" DIMENSIONS MAY BE SUBMITTED FOR APPROVAL IN WHICH CASE BOTH PRECAST AND PEMB VENDOR DESIGNS MUST BE COORDINATED FOR RESOLUTION OF DIMENSIONS TO BE USED IN CONSTRUCTION AND TO ACHIEVE FINAL APPROVED SUBMITTALS.
10. EXPECTED MINIMUM REQUIRED CAPACITY OF THE PRECAST CAP BEAMS (LRFD):

    FLEXURE: **± 225 KIP-FT**
    SHEAR: **85 KIP**

ESTIMATED COLUMN REACTION SUMMARY

COLUMN LOCATION	LOAD	FX (KIPS)	FY (KIPS)	FZ (KIPS)
FRAME LINES: P10 & P18 GRIDS: A & D	DL	-	2.6	0.1
	DL_C	-	0.2	0.1
	RLL	-	0.4	0.1
	WL	± 7.1	± 20.8	± 14.0
	EL	± 2.6	± 5.6	± 2.2
FRAME LINES: P12, P14, P16 GRIDS: A & D	DL	-	6.1	0.9
	DL_C	-	2.0	0.6
	RLL	-	4.8	1.3
	WL	± 3.6	14.1 -52.5	± 20.5
	EL	± 2.6	± 1.7	± 2.3
END WALL COLUMNS: P10 & P18 GRIDS: B & C	DL	-	3.7	-
	DL_C	-	1.0	-
	RLL	-	3.0	-
	WL	± 11.5	18.5 -29.5	-
	EL	± 0.1	± 5.8	-

NOTES:
1. REACTIONS SHOWN ARE FOR ESTIMATING PURPOSES ONLY. FINAL REACTIONS SHALL BE PROVIDED BY THE PEMB MANUFACTURER PRIOR TO CONSTRUCTION.
2. FX REACTION IS HORIZONTAL AND ACTS PARALLEL TO THE ROOF RIDGE.
3. FY REACTION IS VERTICAL. MINUS SIGN INDICATES UPLIFT.
4. FZ REACTION IS HORIZONTAL AND ACTS NORMAL TO THE ROOF RIDGE. MINUS SIGN INDICATES DIRECTION TOWARD THE ROOF RIDGE.
5. REACTIONS SHOWN ABOVE ARE UNFACTORED.
6. DL = DEAD LOAD, DL_C = COLLATERAL DEAD LOAD, RLL = ROOF LIVE LOAD, WL = WIND LOAD, E = EARTHQUAKE LOAD. COLLATERAL DEAD LOAD SHALL NOT BE USED TO RESIST WIND UPLIFT FORCES.

US Army Corps of Engineers ®

MARK	DESCRIPTION	DATE

DESIGNED BY: ADAM BELEW, PE
DRAWN BY: ADAM BELEW, PE
CHECKED BY: TARRIS GREER, PE
SUBMITTED BY: LAUREN D'ARMOND, PE
ISSUE DATE: JUNE 2023
SOLICITATION NO.: W912P8-23-B-0061
CONTRACT NO.: WXXXXX-XX-X-XXXX
SIZE: ANSI D

US ARMY CORPS OF ENGINEERS
NEW ORLEANS DISTRICT
NEW ORLEANS, LA

FRESHWATER BAYOU WATERWAY
FRESHWATER BAYOU LOCK
NEW SHOPS BUILDING
VERMILION PARRISH, LA

PRECAST FRAMING ENLARGED PLANS AND SECTIONS

SHEET ID
S-401

READY FOR ADVERTISEMENT

GENERAL NOTES

1. PRECAST CONNECTION DETAILS AND REINFORCEMENT ARE SHOWN TO INDICATE THE EXPECTED DESIGN. FINAL DESIGN OF THE PRECAST ELEMENTS AND CONNECTIONS SHALL BE BY THE PRECAST MANUFACTURER, TYP. U.N.O. WHERE ADDITIONAL (ADD'L) REINFORCEMENT IS NOTED IN THE PRECAST CAP BEAMS, THE PRECAST MANUFACTURER SHALL PROVIDE THE SPECIFIED REINFORCEMENT IN ADDITION TO THE REINFORCEMENT REQUIRED BY DESIGN.
2. ALL REINFORCEMENT SHALL HAVE 2-1/2" OF CLEAR COVER, TYP. U.N.O.

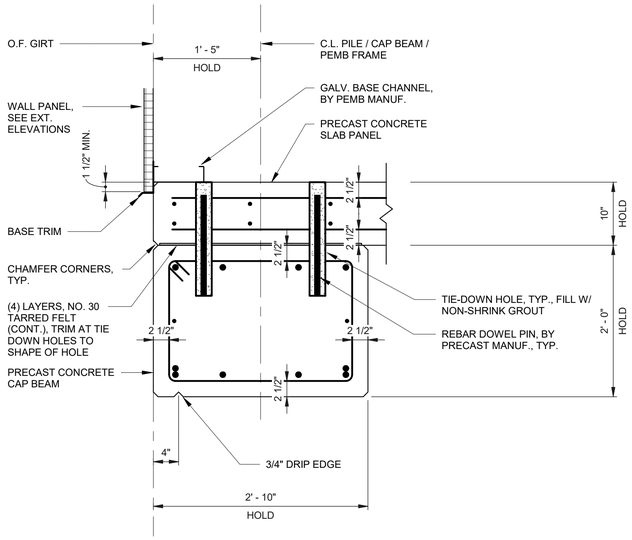

H1 WALL BASE DETAIL AT END WALL

1" = 1'-0"

0 0.5' 1' 2'

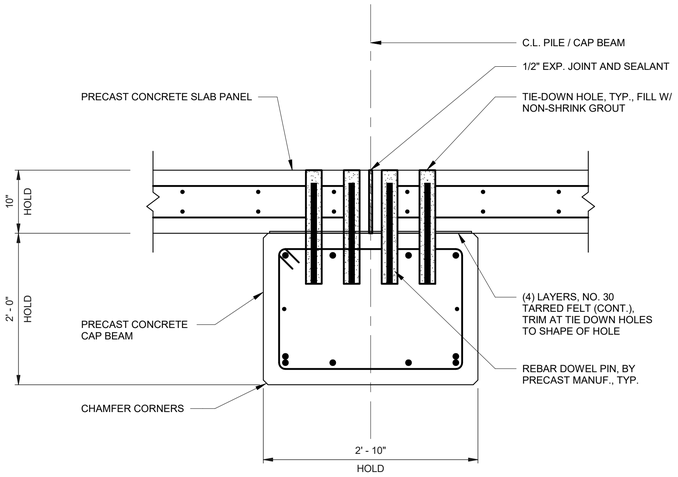

H8 SLAB TO CAP BEAM CONNECTION DETAIL

1" = 1'-0"

0 0.5' 1' 2'

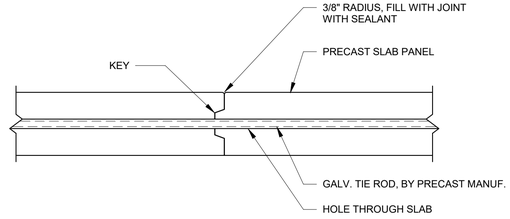

H15 SECTION AT LONGITUDINAL SLAB JOINT

1" = 1'-0"

0 0.5' 1' 2'

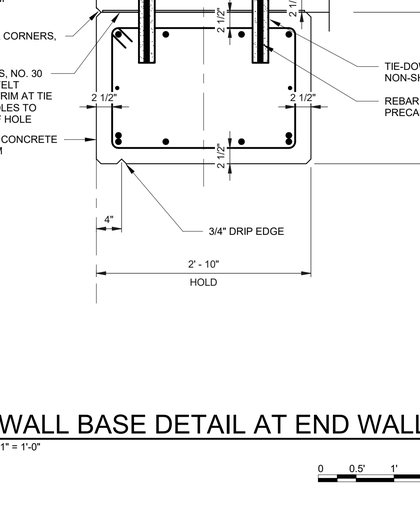

A1 WALL BASE DETAIL AT SIDE WALL

1" = 1'-0"

0 0.5' 1' 2'

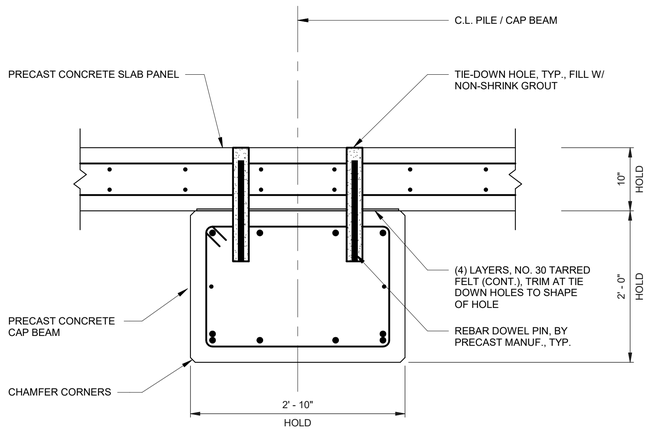

A8 SLAB PANEL TO CAP BEAM CONNECTION DETAIL

1" = 1'-0"

0 0.5' 1' 2'

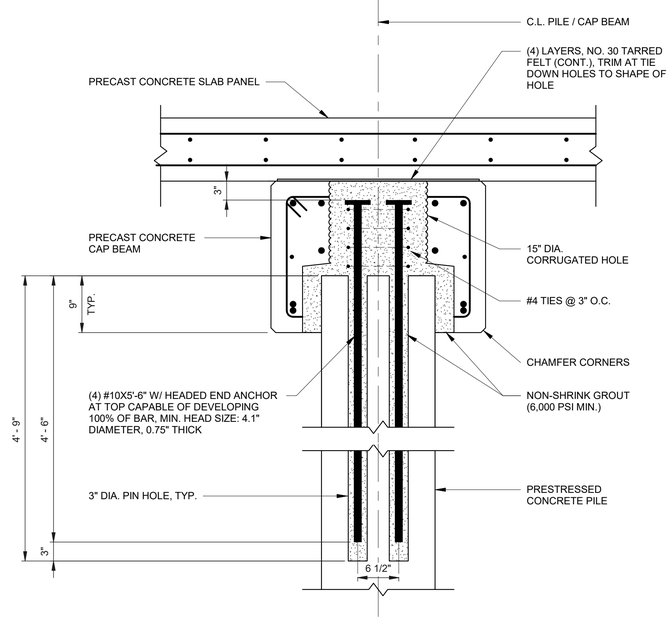

A15 PILE TO CAP BEAM CONNECTION DETAIL

1" = 1'-0"

0 0.5' 1' 2'

US Army Corps of Engineers ®

MARK	DESCRIPTION	DATE

DESIGNED BY: ADAM BELEW, PE
DRAWN BY: ADAM BELEW, PE
CHECKED BY: TARRIS GREER, PE
SUBMITTED BY: LAUREN D'ARMOND, PE
SIZE: ANSI D
ISSUE DATE: JUNE 2023
SOLICITATION NO.: W912P8-23-B-0061
CONTRACT NO.: WXXXXX-XX-X-XXXX

US ARMY CORPS OF ENGINEERS
NEW ORLEANS DISTRICT
NEW ORLEANS, LA

FRESHWATER BAYOU WATERWAY
FRESHWATER BAYOU LOCK
NEW SHOPS BUILDING
VERMILION PARRISH, LA

PRECAST FRAMING SECTIONS

SHEET ID
S-402

READY FOR ADVERTISEMENT

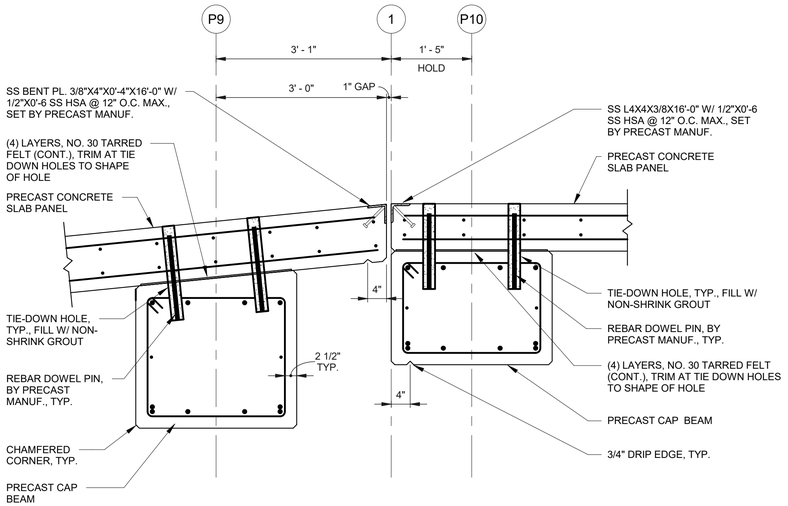

J1 SECTION AT PLATFORM AND RAMP

3/4" = 1'-0"

0 0.5' 1' 2' 3'

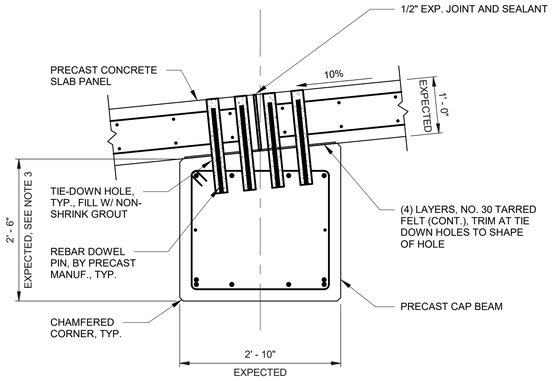

J10 SECTION AT SLAB TO CAP BEAM AT JOINT

3/4" = 1'-0"

0 0.5' 1' 2' 3'

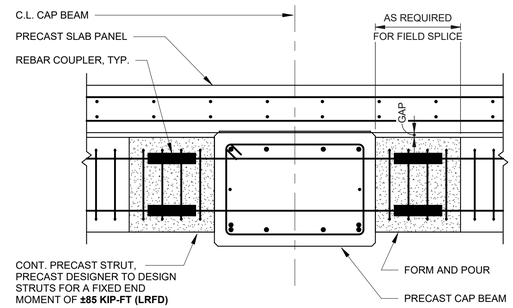

J16 SECTION AT STRUT AND CAP BEAM

3/4" = 1'-0"

0 0.5' 1' 2' 3'

GENERAL NOTES

1. PRECAST CONNECTION DETAILS AND REINFORCEMENT ARE SHOWN TO INDICATE THE EXPECTED DESIGN. FINAL DESIGN OF THE PRECAST ELEMENTS AND CONNECTIONS SHALL BE BY THE PRECAST MANUFACTURER, TYP. U.N.O. WHERE ADDITIONAL (ADD'L) REINFORCEMENT IS NOTED IN THE PRECAST CAP BEAMS, THE PRECAST MANUFACTURER SHALL PROVIDE THE SPECIFIED REINFORCEMENT IN ADDITION TO THE REINFORCEMENT REQUIRED BY DESIGN.
2. ALL REINFORCEMENT SHALL HAVE 2-1/2" OF CLEAR COVER, TYP. U.N.O.
3. THE PRECAST DIMENSIONS SHOWN IN DETAIL J10 MARKED "EXPECTED" ARE THE TYPICAL ANTICIPATED PRECAST MEMBER WIDTHS AND DEPTHS FOR THE RAMP. THE PILE HEAD ELEVATIONS SHOWN ON DRAWINGS S-101 ARE BASED ON THESE DIMENSIONS.

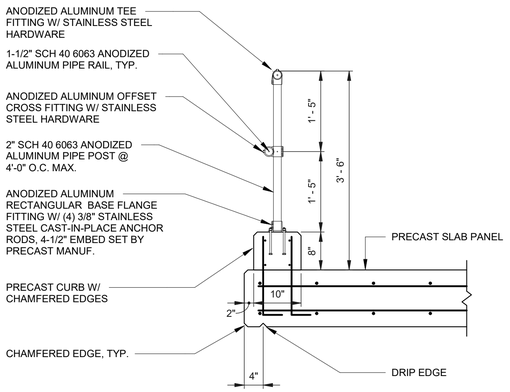

D1 SECTION AT RAMP SLAB EDGE

3/4" = 1'-0"

0 0.5' 1' 2' 3'

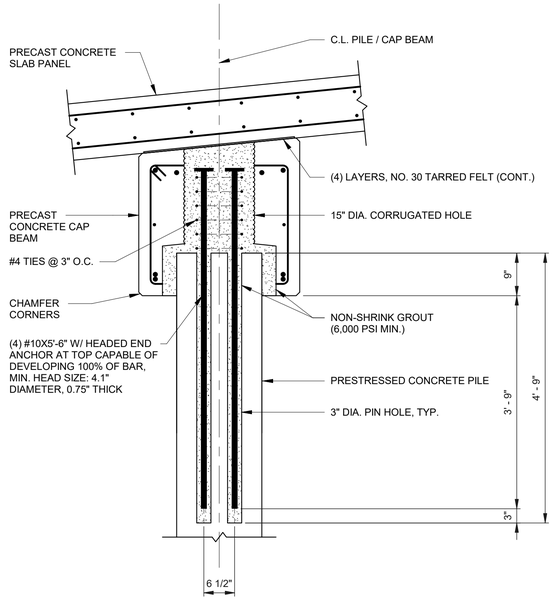

B10 SECTION AT RAMP PILE TO CAP BEAM

3/4" = 1'-0"

0 0.5' 1' 2' 3'

US Army Corps of Engineers ®

MARK	DESCRIPTION	DATE

DESIGNED BY: ADAM BELEW, PE	ISSUE DATE: JUNE 2023
DRAWN BY: ADAM BELEW, PE	SOLICITATION NO.: W912P8-23-B-0061
CHECKED BY: TARRIS GREER, PE	CONTRACT NO.: WXXXXX-XX-X-XXXX
SUBMITTED BY: LAUREN DARMOND, PE	
SIZE: ANSI D	

US ARMY CORPS OF ENGINEERS
NEW ORLEANS DISTRICT
NEW ORLEANS, LA

FRESHWATER BAYOU WATERWAY
FRESHWATER BAYOU LOCK
NEW SHOPS BUILDING
VERMILION PARRISH, LA
PRECAST FRAMING SECTIONS

SHEET ID

S-403

READY FOR ADVERTISEMENT

GENERAL NOTES

1. SEE SPECIFICATION 05 05 20 FOR POST-INSTALLED ADHESIVE ANCHOR REQUIREMENTS.

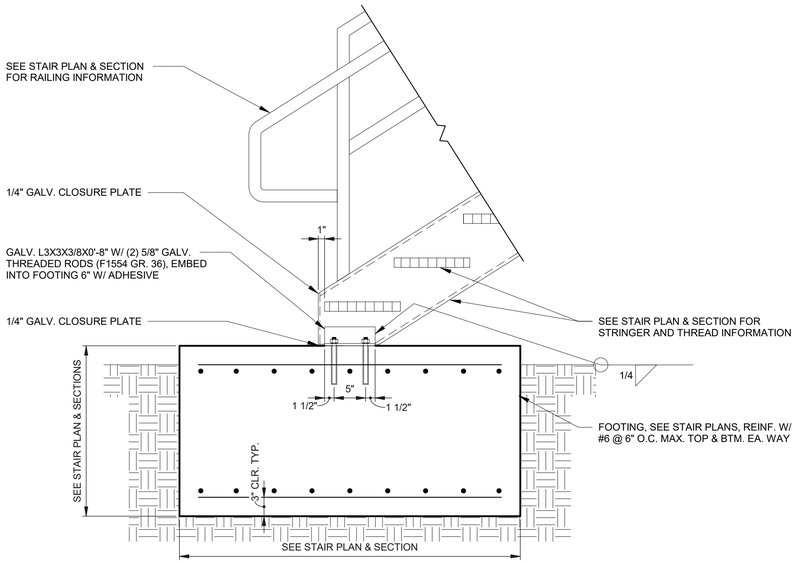

J1 BOTTOM OF STRINGER CONNECTION DETAIL

1" = 1'-0"

0 0.5' 1' 2'

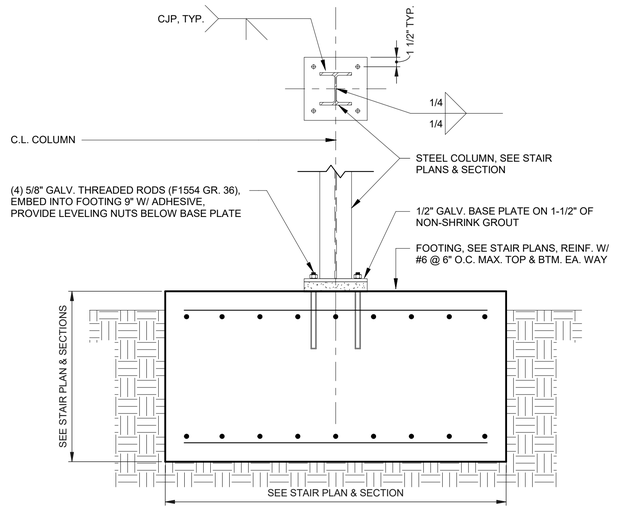

J9 STAIR COLUMN BASE ANCHORAGE DETAIL

1" = 1'-0"

0 0.5' 1' 2'

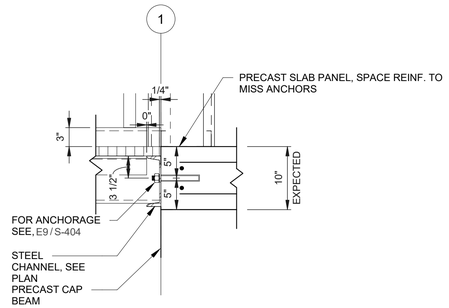

J16 TOP OF STRINGER CON. DETAIL

1" = 1'-0"

0 0.5' 1' 2'

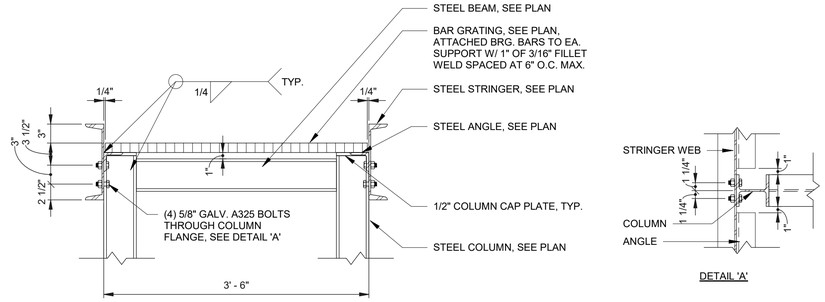

E1 STAIR SECTION AT INTERMEDIATE LANDING

1" = 1'-0"

0 0.5' 1' 2'

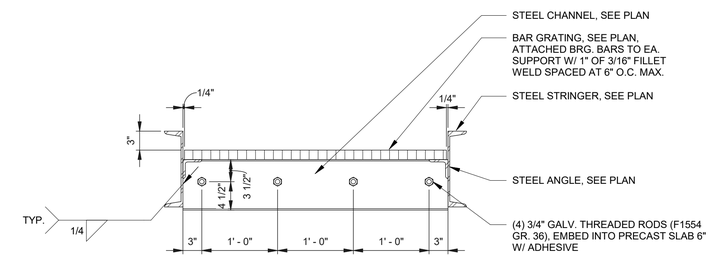

E9 SOUTH STAIR TOP OF STRINGER CON. DETAIL

1" = 1'-0"

0 0.5' 1' 2'

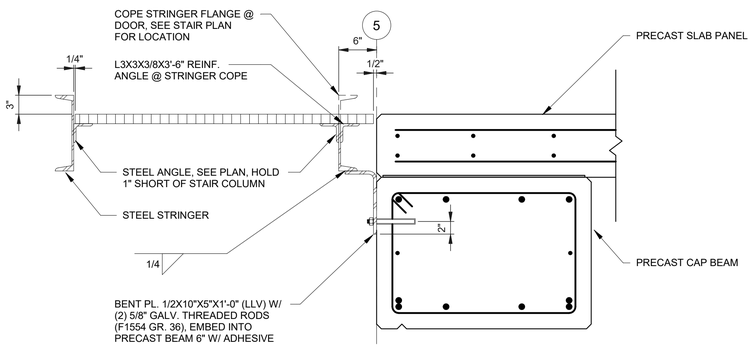

A1 STAIR SECTION AT DOOR OPENING

1" = 1'-0"

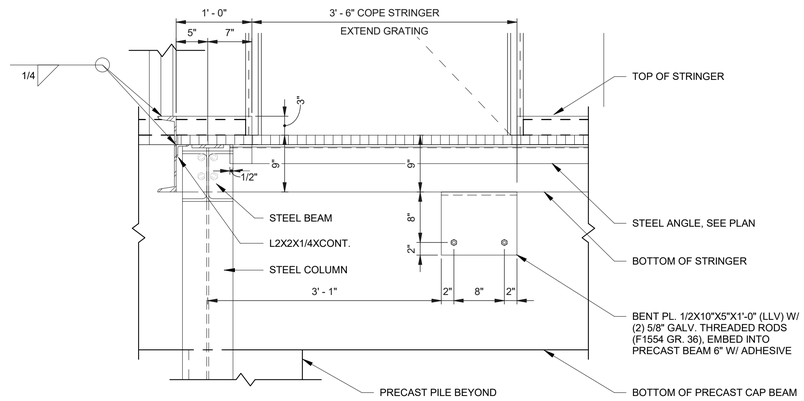

A9 STAIR SECTION AT TOP LANDING AND DOOR

1" = 1'-0"

US Army Corps of Engineers ®

MARK	DESCRIPTION	DATE

DESIGNED BY: ADAM BELEW, PE	ISSUE DATE: JUNE 2023
DRAWN BY: ADAM BELEW, PE	SOLICITATION NO.: W912P8-23-B-0061
CHECKED BY: TARRIS GREER, PE	CONTRACT NO.: WXXXXX-XX-X-XXXX
SUBMITTED BY: LAUREN D'ARMOND, PE	
SIZE: ANSI D	

US ARMY CORPS OF ENGINEERS
NEW ORLEANS DISTRICT
NEW ORLEANS, LA

FRESHWATER BAYOU WATERWAY
FRESHWATER BAYOU LOCK
NEW SHOPS BUILDING
VERMILION PARRISH, LA
STAIR SECTIONS

SHEET ID
S-404

READY FOR ADVERTISEMENT

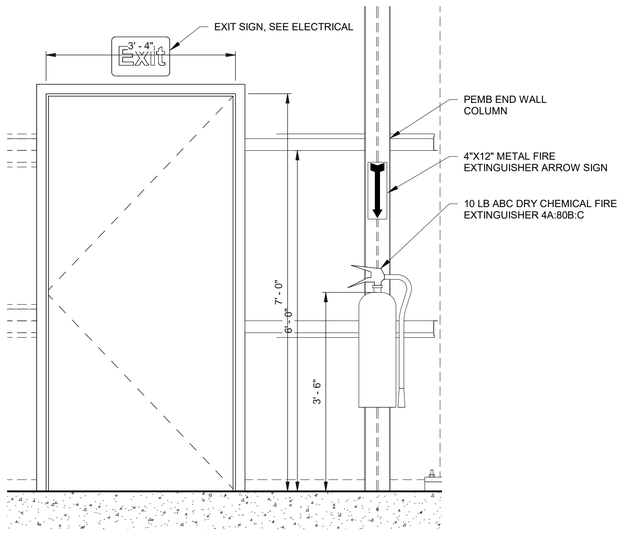

OPPOSITE HAND @ SIM.

J1 INTERIOR ELEVATION AT MAN DOOR

3/4" = 1'-0"

0 0.5' 1' 2' 3'

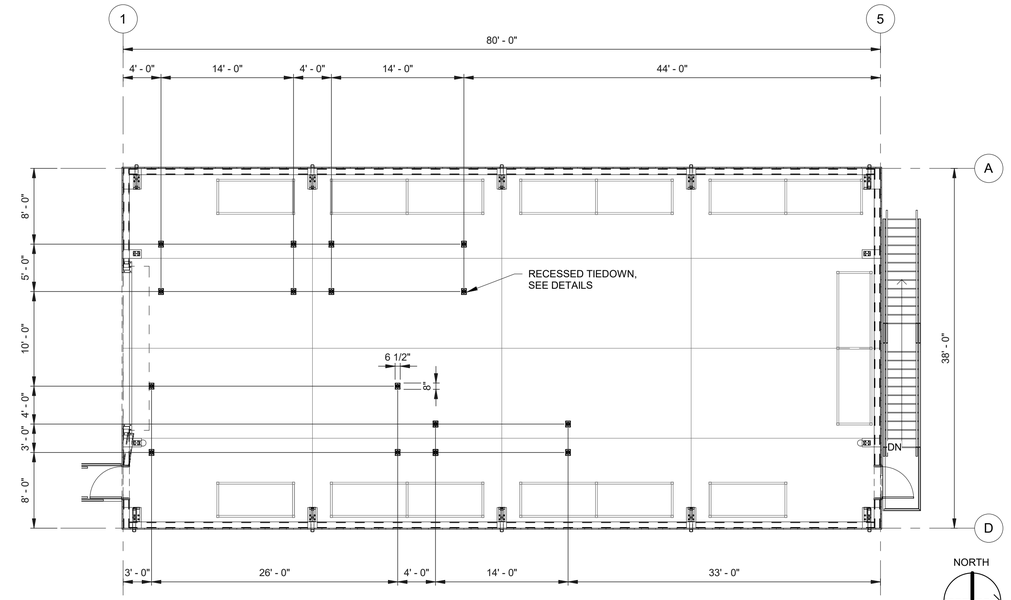

J9 EQUIPMENT TIEDOWN LAYOUT

1/8" = 1'-0"

0 4' 8' 16'

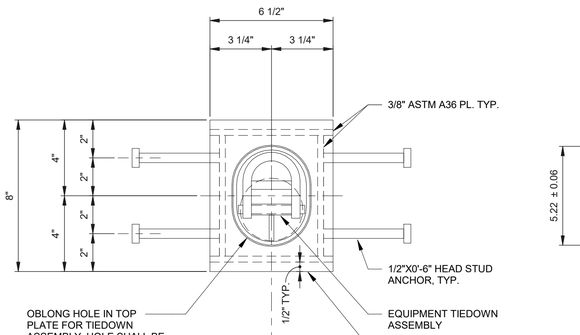

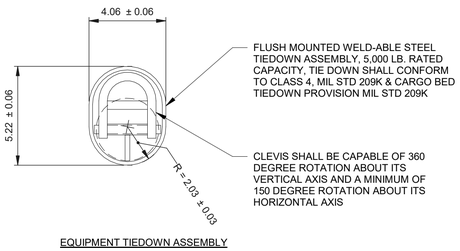

EQUIPMENT TIEDOWN ASSEMBLY

A1 RECESSED EQUIPMENT TIEDOWN DETAILS

3" = 1'-0"

0 0.125' 0.25' 0.5' 0.75'

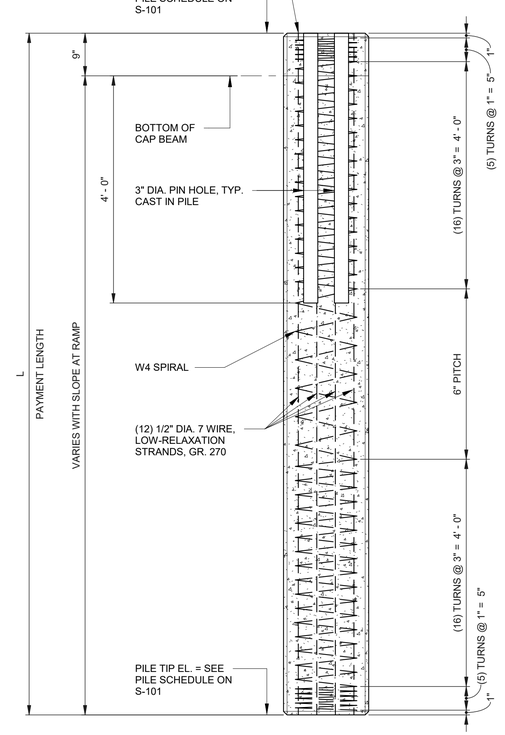

A11 PRESTRESSED CONCRETE PILE DETAIL

3/4" = 1'-0"

0 4' 8' 16'

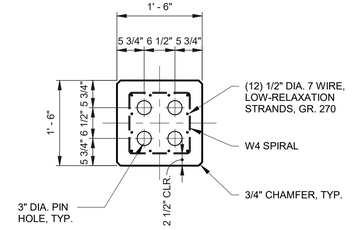

SECTION AT PILE HEAD

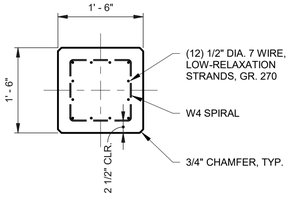

TYPICAL PILE SECTION

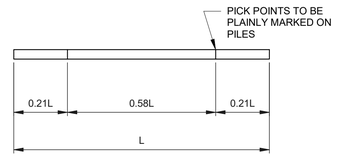

PICK POINT DETAIL

US Army Corps of Engineers ®

MARK	DESCRIPTION	DATE

ISSUE DATE:	JUNE 2023
SOLICITATION NO.:	W912P8-23-B-0061
CONTRACT NO.:	WXXXXX-XX-X-XXXX
DESIGNED BY:	ADAM BELEW, PE
DRAWN BY:	ADAM BELEW, PE
CHECKED BY:	TARRIS GREER, PE
SUBMITTED BY:	LAUREN DARMOND, PE
SIZE:	ANSI D

US ARMY CORPS OF ENGINEERS
NEW ORLEANS DISTRICT
NEW ORLEANS, LA

FRESHWATER BAYOU WATERWAY
FRESHWATER BAYOU LOCK
NEW SHOPS BUILDING
VERMILION PARRISH, LA

DETAILS

SHEET ID

S-501

READY FOR ADVERTISEMENT

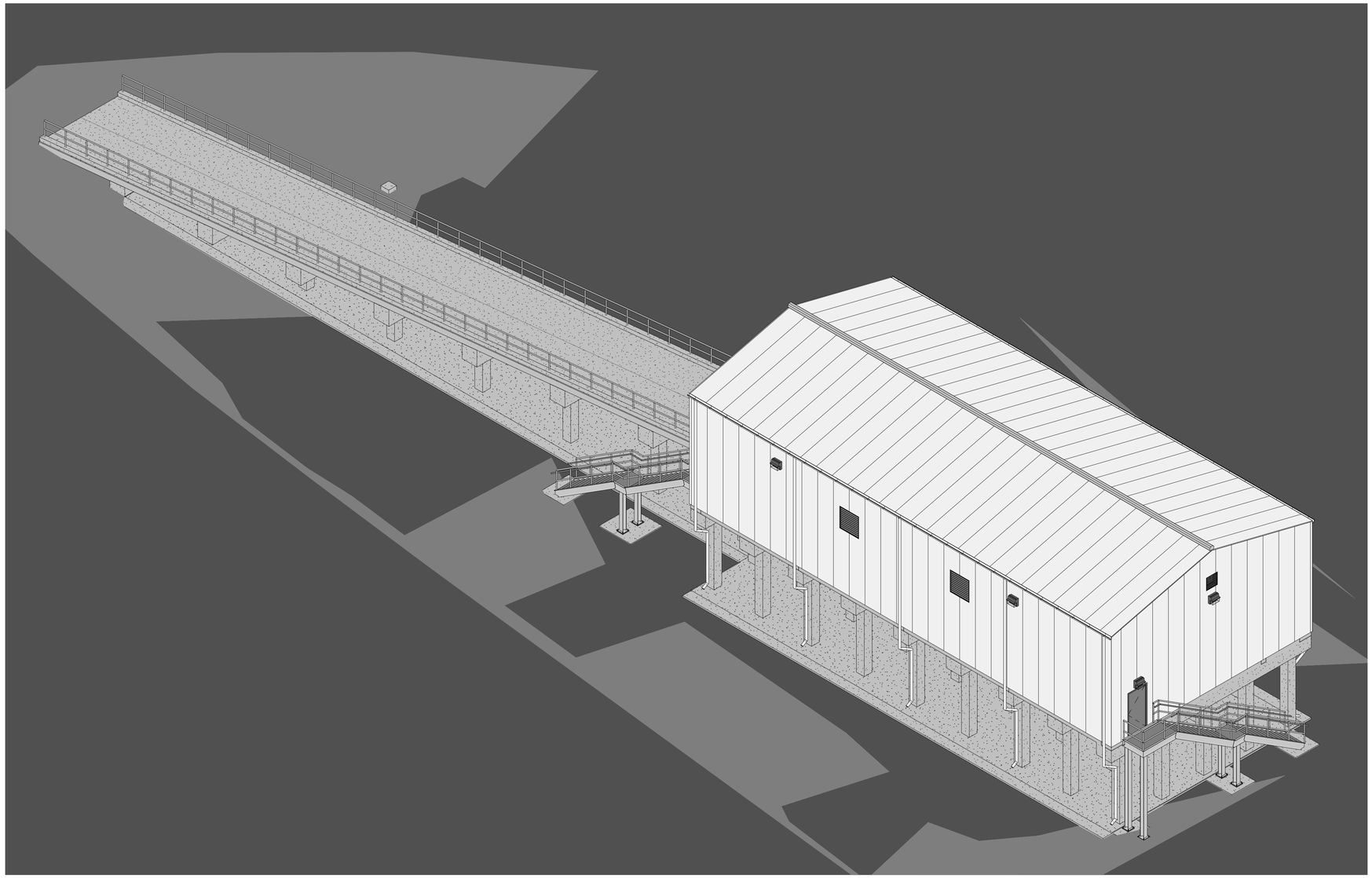

A1 NORTHEAST ISOMETRIC

US Army Corps of Engineers ®

MARK	DESCRIPTION	DATE

DESIGNED BY: ADAM BELEW, PE
DRAWN BY: ADAM BELEW, PE
CHECKED BY: TARRIS GREER, PE
SUBMITTED BY: LAUREN D'ARMOND, PE
SIZE: ANSI D
ISSUE DATE: JUNE 2023
SOLICITATION NO.: W912P8-23-B-0061
CONTRACT NO.: WXXXXX-XX-X-XXXX

US ARMY CORPS OF ENGINEERS
NEW ORLEANS DISTRICT
NEW ORLEANS, LA

FRESHWATER BAYOU WATERWAY
FRESHWATER BAYOU LOCK
NEW SHOPS BUILDING
VERMILION PARRISH, LA
NORTHEAST ISOMETRIC

SHEET ID
S-901

READY FOR ADVERTISEMENT

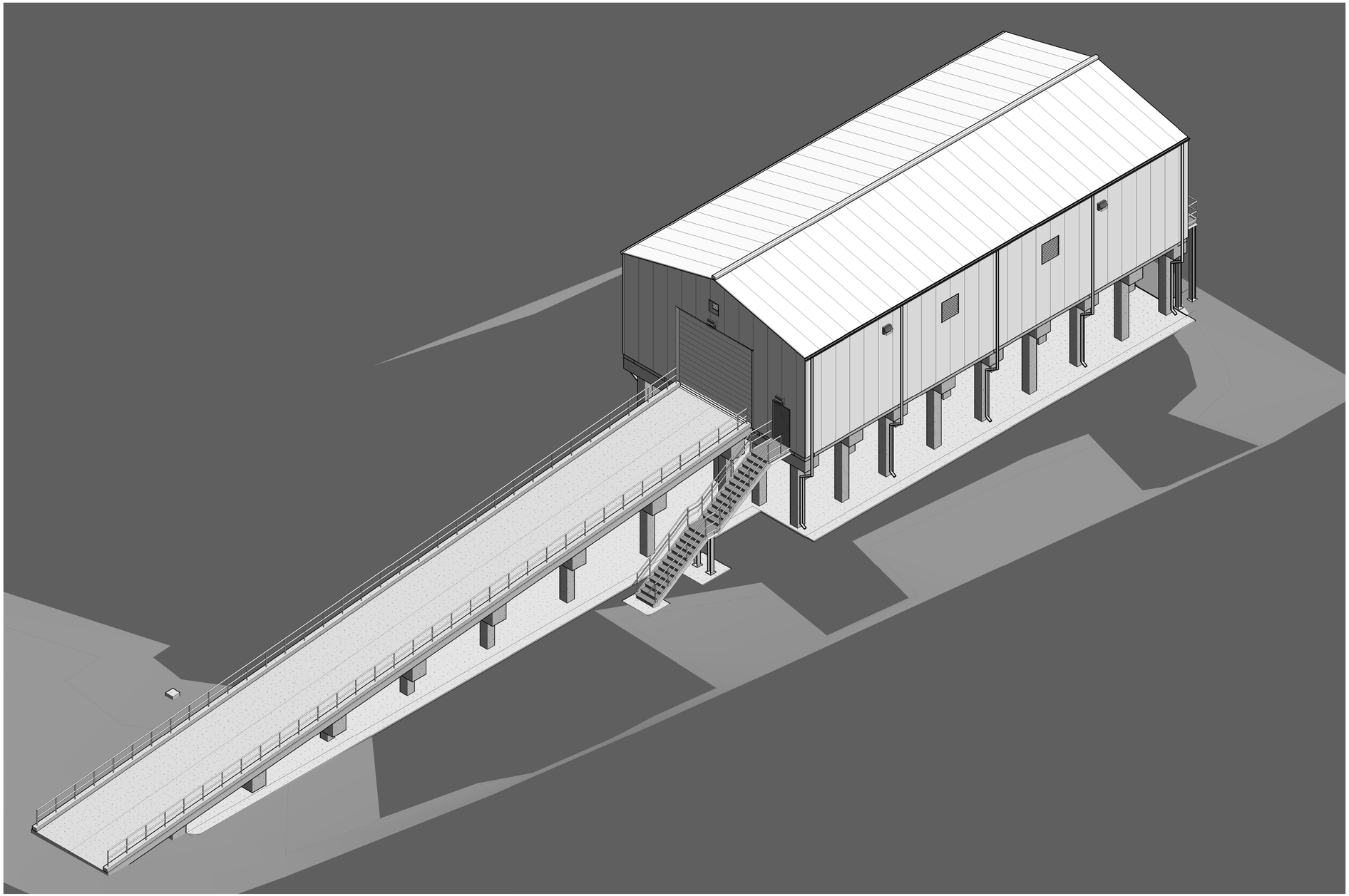

A1 SOUTHEAST ISOMETRIC

US Army Corps of Engineers ®

MARK	DESCRIPTION	DATE

US ARMY CORPS OF ENGINEERS
NEW ORLEANS DISTRICT
NEW ORLEANS, LA

DESIGNED BY:
ADAM BELEW, PE
DRAWN BY:
ADAM BELEW, PE
CHECKED BY:
TARRIS GREER, PE
SUBMITTED BY:
LAUREN D'ARMOND, PE
SIZE:
ANSI D

ISSUE DATE:
JUNE 2023
SOLICITATION NO.:
W912P8-23-B-0061
CONTRACT NO.:
WXXXXX-XX-X-XXXX

FRESHWATER BAYOU WATERWAY
FRESHWATER BAYOU LOCK
NEW SHOPS BUILDING
VERMILION PARRISH, LA
SOUTHEAST ISOMETRIC

SHEET ID
S-902

READY FOR ADVERTISEMENT

ELECTRICAL LEGENDS:

	LIGHTING FIXTURE - LED - WALL MOUNT
	LIGHTING FIXTURE F1 - LED - PENDANT MOUNT
	LIGHTING FIXTURE F2 - LED WITH EMERGENCY BATTERY PACK- PENDANT MOUNT
	EXIT SIGN - WALL MOUNT
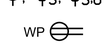	S = SWITCH - SINGLE POLE, S3 = THREE-WAY SWITCH WITH OCCUPANCY SENSOR, MH = 48" AFF
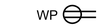	DUPLEX RECEPTACLE - 20A - 120V (WP= WEATHERPROOF)
	QUADRUPLEX RECEPTACLE - 20A - 120V
	POWER RECEPTACLE, 2-POLE W/ GRD - 30A, 208V, NEMA 6-50R, UNLESS NOTED OTHERWISE
	JUNCTION BOX
	LIGHTING PANEL (P3) - 208/120V, 3-PHASE, 4-WIRE, NEMA 12
	HORSEPOWER RATED MANUAL TOGGLE SWITCH, 208V, WALL MOUNT AT 4FT AFF
	HOMERUN TO PANEL P3 - CIRCUIT # 4 IN 3/4"C UNLESS NOTED OTHERWISE
	LIGHTING PANEL CIRCUIT BREAKER (GFCI= GROUND FAULT CIRCUIT INTERRUPTING BREAKER)
	HAND-OFF-AUTO SELECTOR SWITCH, WALL MOUNT AT 4FT AFF
	UNIVERSAL SWITCHING RELAY, WALL MOUNT AT 4FT AFF
	DRAWING NOTE
	CABLE NAME
	UNDERGROUND CONDUIT
	RELAY CONTACTOR, NORMALLY OPENED
	MANUAL STARTER HORSEPOWER RATED TOGGLE SWITCH
	VARIABLE SPEED CONTROL SWITCH FOR EXHAUST FAN
	HAND-OFF-AUTO SELECTOR SWITCH
	THERMOSTAT, WALL MOUNT AT 4FT AFF
	SUPPLY FAN
	MANUALLY OPERATED EXHAUST/INTAKE LOUVER
	MOTOR
	MECHANICAL HEAT DETECTOR COMBINATION FIXED TEMPERATURE/RATE-OF-RISE
	LIGHTNING PROTECTION SYSTEM EQUIPMENT LISTED ITEM NO.1 (TYP)
	LIGHTNING PROTECTION SYSTEM AIR TERMINAL, COPPER, SIZE AS INDICATED
	GROUND ROD, COPPER CLAD, SIZE AS INDICATED
3/C#12 W/GRD, 3/4"C	MULTI-CONDUCTOR CABLE (3 CONDUCTORS) WITH GROUND IN 3/4" DIA. CONDUIT (TYPICAL)
2#12, #12GRD, 3/4"C	2 SINGLE CONDUCTORS #12 AND 1 GROUND #12 IN 3/4" DIA. CONDUIT (TYPICAL)

GENERAL NOTES:

1. ALL ELECTRICAL WORK SHALL BE DONE IN COMPLIANCE WITH THE LATEST ISSUE OF THE NATIONAL ELECTRICAL CODE-NFPA 70 AS WELL AS STATE AND LOCAL ELECTRICAL CODES.
2. THE INTENT OF THESE DRAWINGS IS TO DEFINE THE CONCEPTUAL SCOPE OF WORK. IT IS THE CONTRACTOR'S RESPONSIBILITY TO SUPPLY ALL NECESSARY MATERIAL AND LABOR TO FURNISH A COMPLETE AND OPERABLE ELECTRICAL SYSTEM.

US Army Corps of Engineers ®

MARK	DESCRIPTION	DATE

DESIGNED BY: Timothy W. Horton
DRAWN BY: SDB
CHECKED BY: Jabeen Pasha, E.I.
SUBMITTED BY: Lauren D'Amond, P.E.
SIZE: ANSI D
ISSUE DATE: JULY 2025
SOLICITATION NO.: W912P8-25-B-A026
CONTRACT NO.:

US ARMY CORPS OF ENGINEERS

FRESHWATER BAYOU WATERWAY
FRESHWATER BAYOU LOCK
NEW SHOPS BUILDING
VERMILION PARISH, LA

ELECTRICAL LEGEND

SHEET ID
E-001

READY FOR ADVERTISEMENT

GENERAL NOTES

1. POWER FOR THE NEW SHOPS BLDG SHALL BE FED FROM PANEL P1 IN EXISTING SHOPS BUILDING. THE CONTRACTOR SHALL INSTALL 60A, 3-POLE BREAKER IN EXISTING PANEL P1 FOR NEW SHOPS BLDG. RUN FOUR (4) #2 AWG W/ #8 AWG GRD TO NEW DISCONNECT FOR NEW SHOPS BLDG.
2. FEED FOR NEW SHOPS BLDG SHALL BE CONTINUOUS AND TERMINATED AT THE NEW DISCONNECT. SPLICING THE FEEDER IN ANY PB IS NOT PERMITTED.
3. ALL NEW UNDERGROUND CONDUIT SHALL BE SCHEDULE 80 PVC AND ENCASED IN A CONCRETE DUCT BANK. SEE SHEET E-300 FOR TRENCH DETAIL.
4. ALL CONDUIT RISES OUT OF GROUND SHALL BE PVC COATED RIGID GALVANIZED STEEL AND STUBBED UP THROUGH SLAB TO DISCONNECT. PROVIDE GALVANIZED STEEL EXPANSION FITTING AT TRANSITION FROM GROUND TO STRUCTURE. EXPANSION FITTING SHALL ALLOW 4" OF SETTLEMENT. SECURE CONDUIT TO STRUCTURAL PILE WITH RIGID CONDUIT CLAMPS.
5. INSTALL NEW PB TO AVOID STRUCTURAL PILES.
6. LENGTH OF NEW FEED IS ESTIMATED. THE CONTRACTOR SHALL VERIFY ACTUAL DIMENSIONS IN THE FIELD.

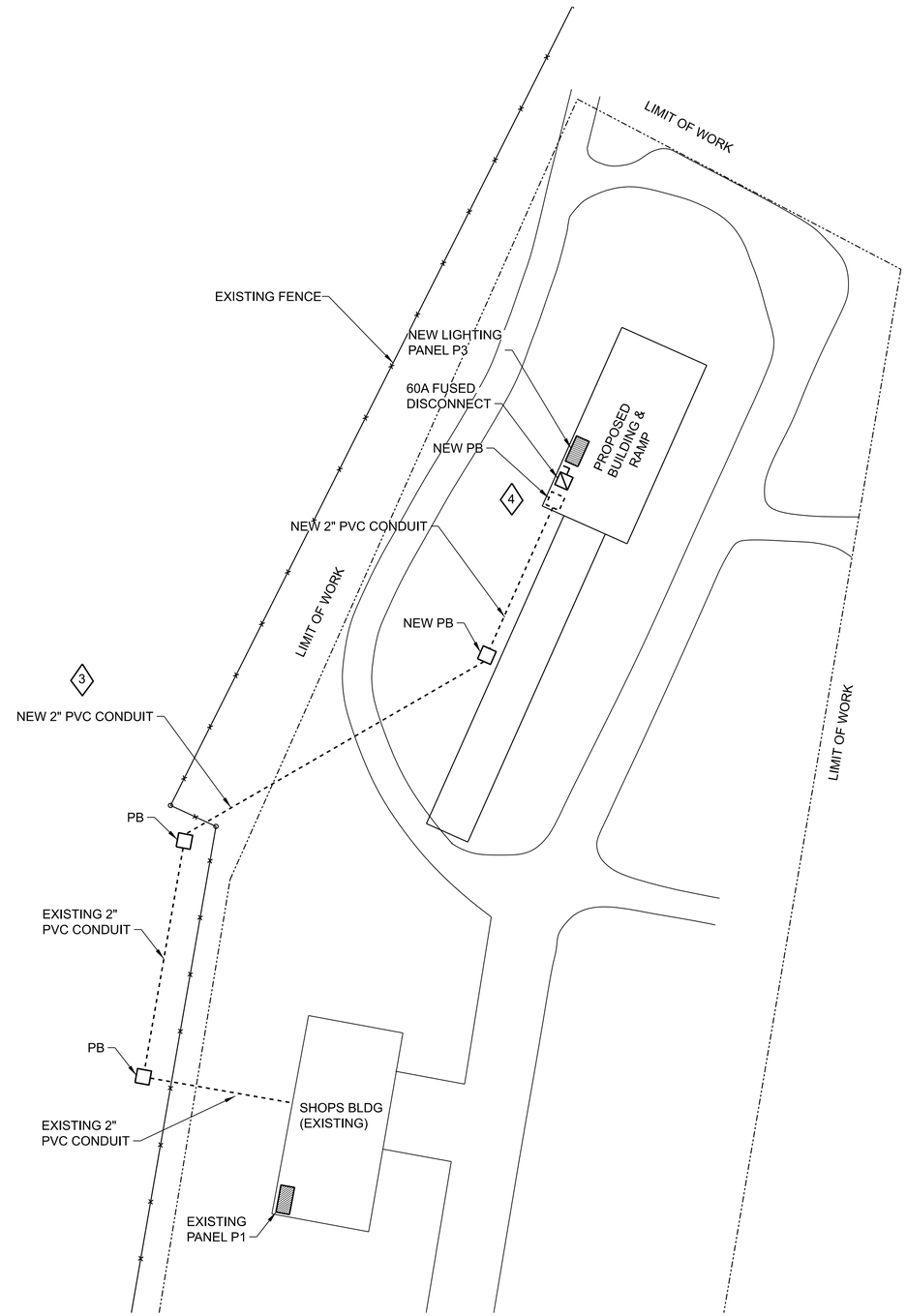

SITE PLAN - ELECTRICAL
SCALE: 1" = 30'

PLAN NORTH

US Army Corps of Engineers ®

MARK	DESCRIPTION	DATE

DESIGNED BY: Timothy W. Horton	ISSUE DATE: JULY 2025
DRAWN BY: SDB	SOLICITATION NO.: W912P8-25-B-A026
CHECKED BY: Jabeen Pasha, E.I.	CONTRACT NO.:
SUBMITTED BY: Lauren D'Armond, P.E.	
SIZE: ANSI D	

US ARMY CORPS OF ENGINEERS

H448601_C-102.dgn

FRESHWATER BAYOU WATERWAY
FRESHWATER BAYOU LOCK
NEW SHOPS BUILDING
VERMILION PARISH, LA

ELECTRICAL SITE PLAN

SHEET ID
E-100

READY FOR ADVERTISEMENT

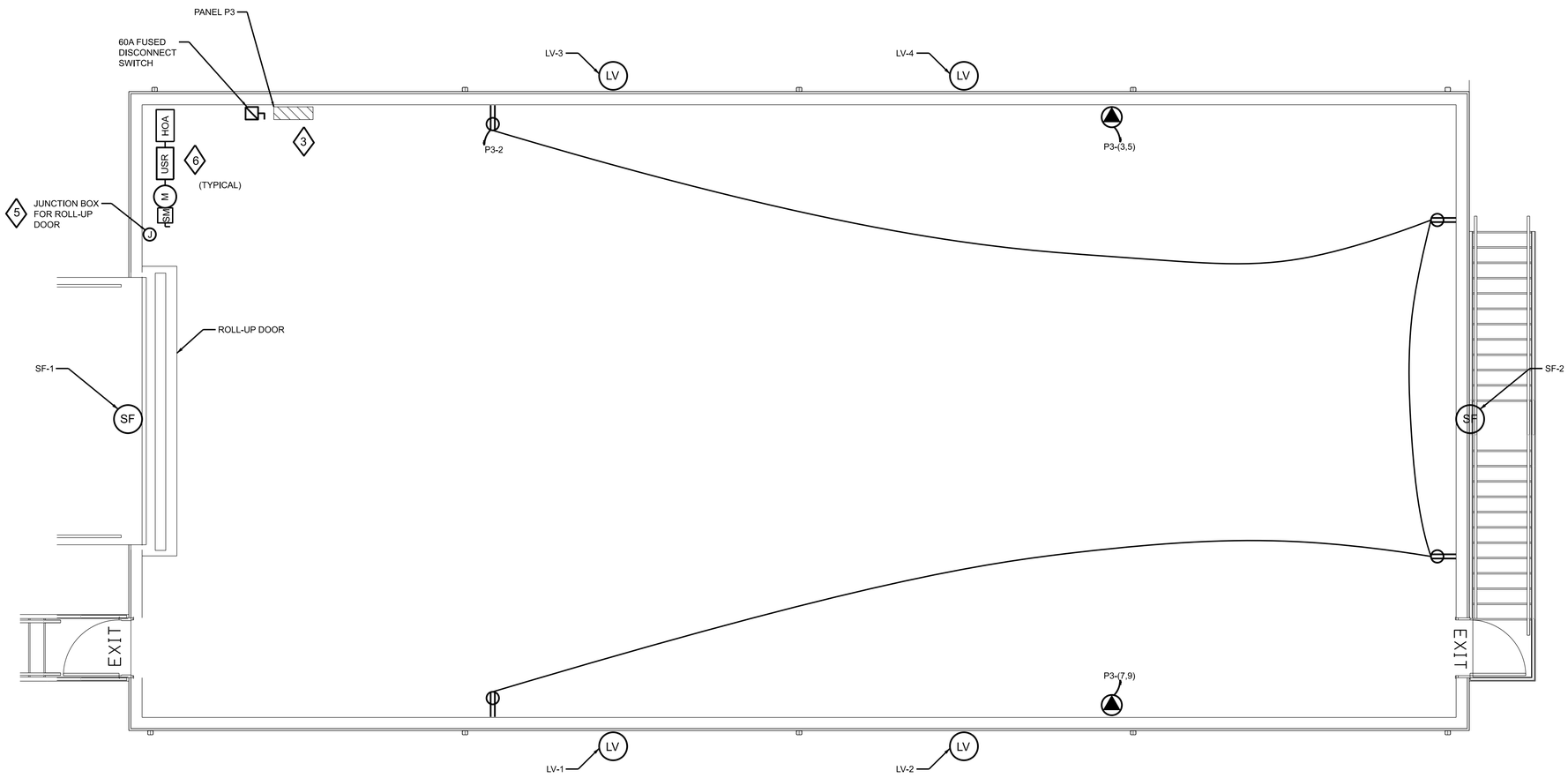

1 ELECTRICAL PLAN

SCALE: 1/4"=1'-0"

GENERAL NOTES

1. ALL OUTLET AND JUNCTION BOXES SHALL BE CAST ALUMINUM WITH GASKETED COVER. RECEPTACLES SHALL BE WALL MOUNTED AT 4 FT AFF.
2. ALL EXPOSED CONDUIT SHALL BE RIGID GALVANIZED STEEL.
3. THE CONTRACTOR SHALL FURNISH A 208/120V, 3 PHASE, 16 CKT LOAD CENTER IN NEMA 12 ENCLOSURE FOR LIGHTING AND OTHER LOADS. SEE SHEET E-300 FOR PANEL SCHEDULE.
4. ALL CONDUCTORS SHALL BE COPPER. BRANCH CIRCUITS LONGER THAN 100 FT SHALL USE #10 AWG CONDUCTORS. BRANCH CIRCUITS SHORTER THAN 100 FT SHALL USE #12 AWG CONDUCTORS. CONDUITS SHALL BE SIZED PER NEC.
5. PROVIDE AND INSTALL 4" ELECTRICAL BOX AND COVER WITH KNOCKOUTS TO SPLICE POWER CONDUCTORS FOR NEW ROLL-UP DOOR MOTOR.
6. SUPPLY FANS ARE TO BE SEPARATELY CONTROLLED VIA LOW VOLTAGE THERMOSTATS (LOCATED IN GENERAL VICINITY OF FANS) IN EITHER MANUAL OR AUTO MODE WITH HAND-OFF-AUTO SWITCH. PROVIDE 12-HOUR SPRING WOUND DIAL TIMER SWITCHES CONNECTED IN PARALLEL WITH THERMOSTATS FOR MANUAL CONTROL OF SUPPLY FANS. POWER TO SUPPLY FANS ARE TO BE SUPPLIED FROM A MANUAL STARTER TOGGLE SWITCH MOUNTED 4FT AFF.

US Army Corps of Engineers ®

MARK	DESCRIPTION	DATE

DESIGNED BY: Timothy W. Horton
DRAWN BY: SDB
CHECKED BY: Jabeen Pasha, E.I.
SUBMITTED BY: Lauren D'Amond, P.E.
SIZE: ANSI D
ISSUE DATE: JULY 2025
SOLICITATION NO.: W912PB-25-B-A026
CONTRACT NO.:

US ARMY CORPS OF ENGINEERS

H448901_G-001.dgn

FRESHWATER BAYOU WATERWAY
FRESHWATER BAYOU LOCK
NEW SHOPS BUILDING
VERMILION PARISH, LA

ELECTRICAL PLAN

SHEET ID
E-101

READY FOR ADVERTISEMENT

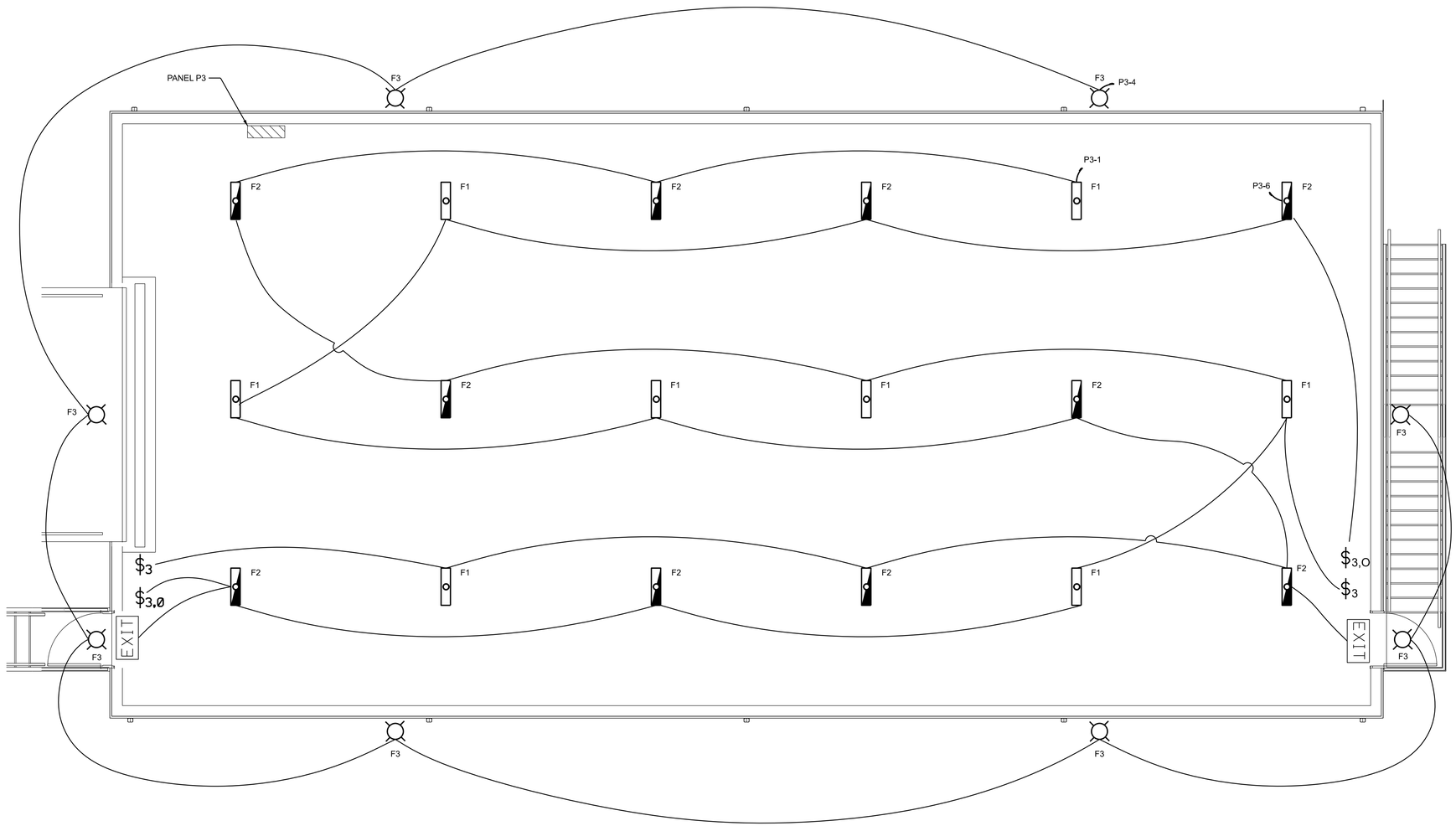

GENERAL NOTES

NOTES:

1. ALL CONDUCTORS SHALL BE COPPER AND MINIMUM #12 AWG. CONDUITS SHALL BE SIZED 3/8" MINIMUM.
2. ALL EXPOSED CONDUIT SHALL BE RIGID GALVANIZED STEEL.
3. BRANCH CIRCUITS LONGER THAN 100 FT SHALL USE #10 AWG CONDUCTORS. BRANCH CIRCUITS SHORTER THAN 100 FT SHALL USE #12 AWG CONDUCTORS. CONDUITS SHALL BE SIZED PER NEC.
4. SEE SHEET E-300 FOR LIGHTING SCHEDULE.
5. EXIT SIGNS AND LED LIGHT FIXTURES WITH BATTERY BACK-UP SHALL BE CONNECTED AHEAD OF ASSOCIATED LIGHT SWITCH.
6. PROVIDE OCCUPANCY SENSORS CONNECTED TO ASSOCIATED LIGHT SWITCH SO THAT THE INTERIOR LIGHTS WILL TURN OFF WITHIN 15 MINUTES OF SENSING VACANCY. FIELD LOCATE OCCUPANCY SENSORS ON NORTH AND SOUTH WALL AT MINIMUM 8 FT AFF.

2 LIGHTING PLAN

SCALE: 1"=1" FULL SIZE

US Army Corps of Engineers ®

MARK	DESCRIPTION	DATE

ISSUE DATE: JULY 2025
SOLICITATION NO.: W912PB-25-B-A026
CONTRACT NO.:

DESIGNED BY: Timothy W. Horton
DRAWN BY: SDB
CHECKED BY: Jabeen Pasha, E.I.
SUBMITTED BY: Lauren D'Armond, P.E.
SIZE: ANSI D

US ARMY CORPS OF ENGINEERS

H448601_G-001.dgn

FRESHWATER BAYOU WATERWAY
FRESHWATER BAYOU LOCK
NEW SHOPS BUILDING
VERMILION PARISH, LA

LIGHTING PLAN

SHEET ID
E-102

READY FOR ADVERTISEMENT

GENERAL NOTES

1. SEE SHEET E-300 FOR LIGHTING SCHEDULE.
2. THE CONTRACTOR SHALL INSTALL A LIGHTNING PROTECTION SYSTEM PER SPEC SECTION 26 41 00. STANDARD LIGHTNING PROTECTION COMPONENTS ARE SHOWN ON THIS DRAWING.
3. ALL CONDUIT RISES OUT OF GROUND SHALL BE PVC COATED RIGID GALVANIZED STEEL AND STUBBED UP THROUGH SLAB TO NEW DISCONNECT. PROVIDE GALVANIZED STEEL EXPANSION FITTING AT TRANSITION FROM GROUND TO STRUCTURE. EXPANSION FITTING SHALL ALLOW 4" OF SETTLEMENT. SECURE CONDUIT TO STRUCTURAL PILE WITH RIGID CONDUIT CLAMPS.
4. INSTALL NEW PB TO AVOID STRUCTURAL PILES.
5. DOWN CONDUCTORS SHALL BE CONNECTED TO 10 FT LONG COPPER CLAD GROUND ROD WITH MINIMUM 3/4" DIAMETER.
6. PROVIDE DOWN CONDUCTORS IN PVC COATED RIGID GALVANIZED STEEL CONDUIT AND PROPERLY CLAMP TO STRUCTURE WITH RIGID CLAMPS.

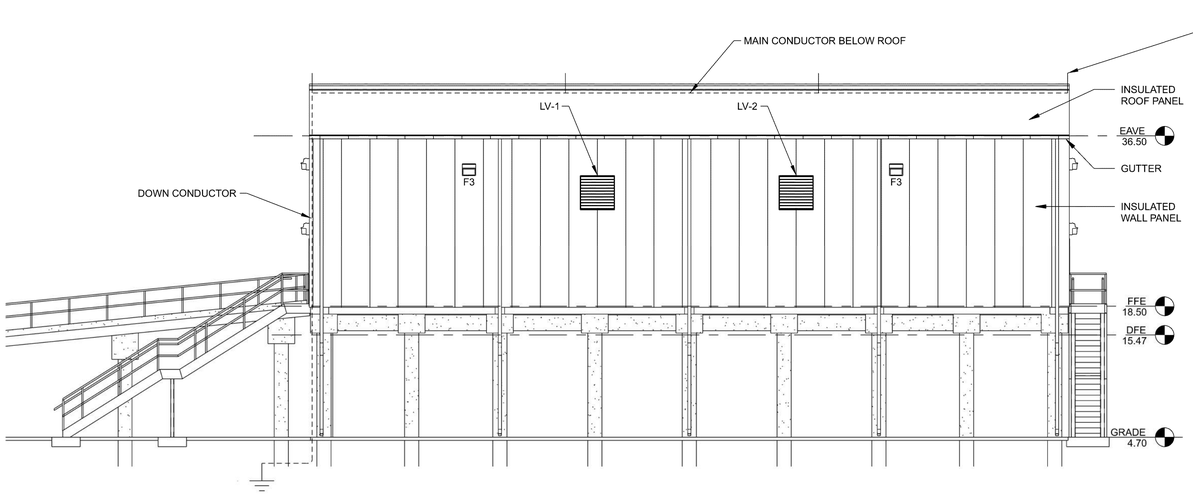

H1 EAST EXTERIOR ELEVATION

1/8" = 1'-0"

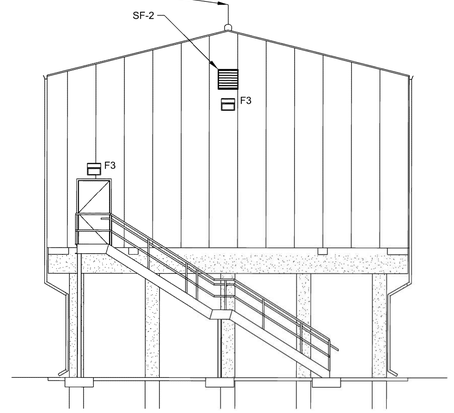

3 NORTH EXTERIOR ELEVATION

1/8" = 1'-0"

0 4' 8' 16'

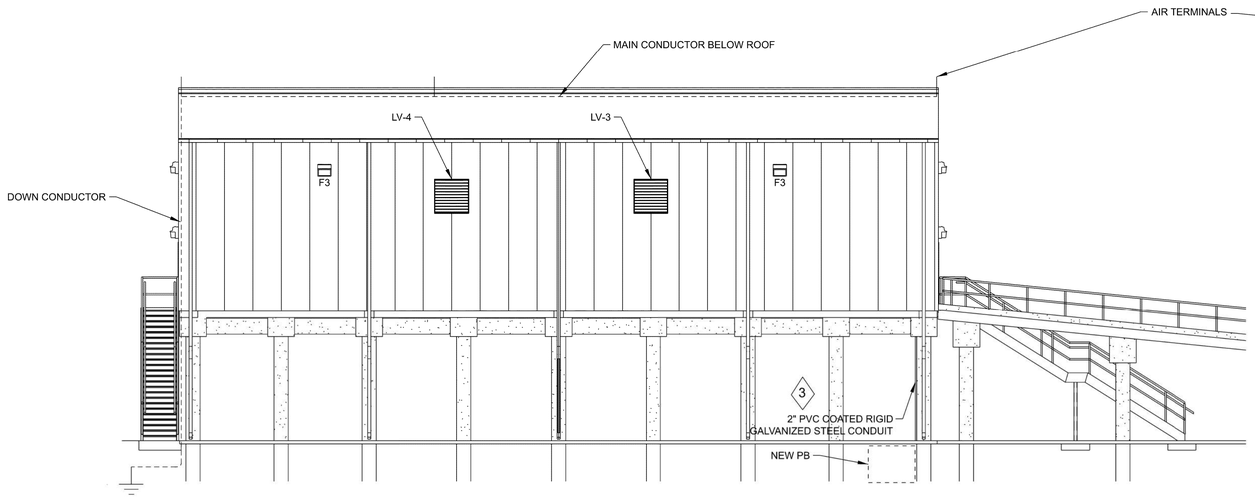

A1 WEST EXTERIOR ELEVATION

1/8" = 1'-0"

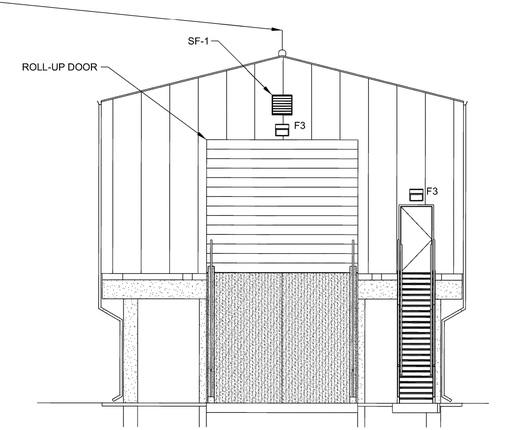

4 SOUTH EXTERIOR ELEVATION

1/8" = 1'-0"

0 4' 8' 16'

US Army Corps of Engineers ®

MARK	DESCRIPTION	DATE

DESIGNED BY: A. BELEW
DRAWN BY: A. BELEW
CHECKED BY: M. RICHARD
SUBMITTED BY:
ISSUE DATE: JULY 2025
SOLICITATION NO.: W912PB-25-B-A026
CONTRACT NO.: WXXXXX-XX-X-XXXX
SIZE: ANSI D

US ARMY CORPS OF ENGINEERS
NEW ORLEANS DISTRICT
NEW ORLEANS, LA

FRESHWATER BAYOU WATERWAY
FRESHWATER BAYOU LOCK
NEW SHOPS BUILDING
VERMILION PARISH, LA

EXTERIOR ELEVATIONS

SHEET ID

E-200

READY FOR ADVERTISEMENT

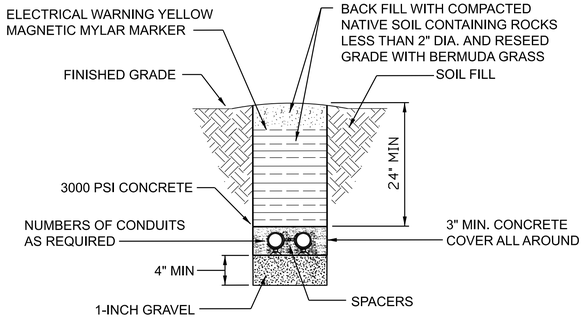

ELECTRICAL TRENCH DETAIL

NO SCALE

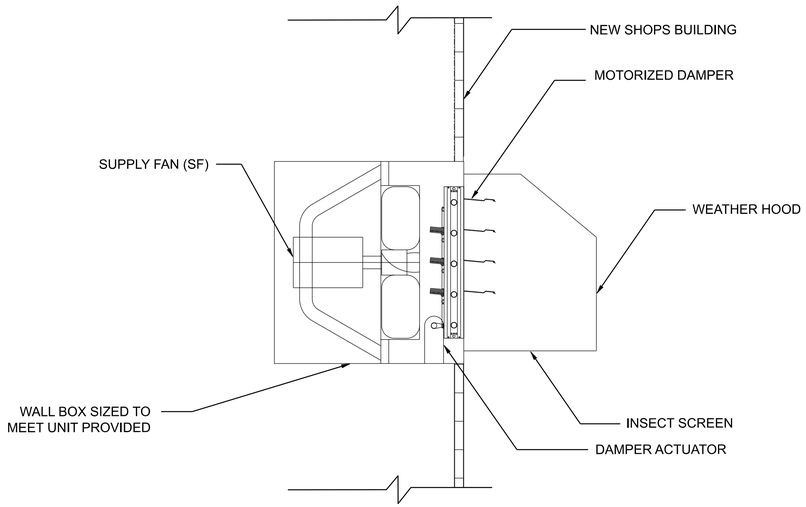

SUPPLY FAN MOUNTING DETAIL

NO SCALE

LIGHTING SCHEDULE			
SYMBOL	VOLT	DESCRIPTION	MOUNTING HEIGHT
F1	120	LED LAMP, ALUMINUM HOUSING WITH POLYESTER POWDER COATING, CLEAR GLASS LENS, 5000 LUMENS, 50K COLOR TEMPERATURE, CORROSION RESISTANT, SUITABLE FOR WET LOCATIONS	PENDANT MOUNTED 16 FT AFF
F2	120	LED LAMP, ALUMINUM HOUSING WITH POLYESTER POWDER COATING, CLEAR GLASS LENS, 5000 LUMENS, 50K COLOR TEMPERATURE, CORROSION RESISTANT, SUITABLE FOR WET LOCATIONS, WITH BATTERY BACKUP	PENDANT MOUNTED 16 FT AFF
F3	120	LED FIXTURE, RUGGED CAST ALUMINUM HOUSING WITH BRONZE POLYESTER POWDER PAINT, PRISMATIC GLASS LENS WALLPACK, UL LISTED, WITH PHOTOCELL CONTROL, SUITABLE FOR WET LOCATIONS	WALL MOUNTED 15 FT AFF AND ABOVE PERSONNEL DOOR
EXIT	120	EXIT SIGN WITH LONG-LIFE LED LAMPS, LETTER COLOR RED, WHITE THERMOPLASTIC HOUSING	WALL MOUNTED ABOVE PERSONNEL DOOR

1 LIGHTING SCHEDULE

SCALE: FULL SIZE 1 = 1

GENERAL NOTES

NOTES:

1. CONDUITS IN DUCT BANK SHALL BE PVC SCHEDULE 80.
2. SEPARATION OF CONDUITS IN DUCT BANKS SHALL BE UNIFORM USING SNAP-LOCK SPACERS. HORIZONTAL OR VERTICAL SEPARATION BETWEEN THE DUCTS SHALL BE MAINTAINED BY INSTALLING HIGH IMPACT SPACERS WITH HORIZONTAL AND LOCKING INTERVALS OF 10 FT. TYPICAL FOR ALL DUCT BANKS.

US Army Corps of Engineers ®

MARK	DESCRIPTION	DATE

DESIGNED BY: Timothy W. Horton
DRAWN BY: SDB
CHECKED BY: Jabeen Pasha, E.I.
SUBMITTED BY: Lauren D'Amond, P.E.
SIZE: ANSI D
ISSUE DATE: JULY 2025
SOLICITATION NO.: W912PB-25-B-A026
CONTRACT NO.:

US ARMY CORPS OF ENGINEERS

H448601_G-001.dgn

FRESHWATER BAYOU WATERWAY
FRESHWATER BAYOU LOCK
NEW SHOPS BUILDING
VERMILION PARISH, LA

LIGHTING SCHEDULE

SHEET ID
E-300

READY FOR ADVERTISEMENT

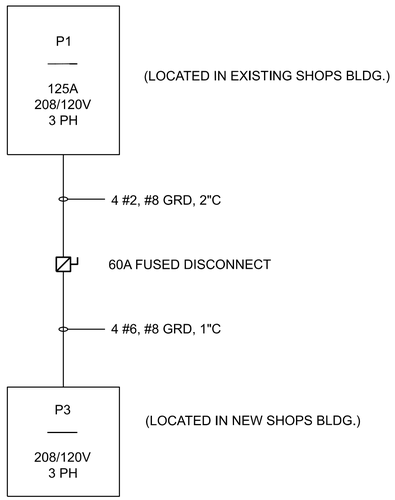

1 ONE-LINE DIAGRAM
SCALE: FULL SIZE 1 = 1

LIGHTING PANEL P3

VOLTAGE:	208/120	**BUS RATING (A):**	100	**ENCLOSURE:**	NEMA 12
PHASE:	3	**MAIN OC DEVICE (A/PHASE):**	MAIN LUG ONLY	**MOUNTING:**	SUFACE
WIRE:	4+GND	**INTERRUPTING RATING (KA):**	10	**LOCATION:**	NEW SHOPS BLDG

CKT NO.	DESCRIPTION	CONNECTED LOAD (VA) LTS	REC	MECH	MISC	OCP AMPS	P		OCP AMPS	P	CONNECTED LOAD (VA) LTS	REC	MECH	MISC	DESCRIPTION	CKT NO.
1	INTERIOR LIGHTING	380				20	1	A	20	1		720			RECEPTACLES	2
3	EAST POWER RECEPTACLE		360			30	2	B	20	1	320				EXTERIOR LIGHTING	4
5								C	20	1	380				INTERIOR LIGHTING	6
7	WEST POWER RECEPTACLE		360			30	2	A	20	1		414			ROLL-UP DOOR	8
9								B	20	1			560		SOUTH SUPPLY FAN	10
11	NORTH SUPPLY FAN			560		20	1	C	20	1					SPARE	12
13								A	20							14
15								B	20							16

LOAD SUMMARY

	LTS	REC	MECH	MISC	SPARE	TOTAL				PHASE BALANCE	
CONNECTED LOAD (KVA)	1.1	1.9	1.1	0.0	---	4.1		208	LINE-TO-LINE VOLTS	PHASE A (KVA)	2
DEMAND FACTOR	1.25	NEC	1.00	1.00	20%	---		11	CONNECTED AMPS	PHASE B (KVA)	1
DESIGN LOAD (KVA)	1.4	1.9	1.1	0.0	0.8	5.1		14	DESIGN AMPS	PHASE C (KVA)	1

2 PANEL P3 SCHEDULE
SCALE: FULL SIZE 1 = 1

US Army Corps of Engineers ®

MARK	DESCRIPTION	DATE

DESIGNED BY: Timothy W. Horton
DRAWN BY: SDB
CHECKED BY: Jabeen Pasha, E.I.
SUBMITTED BY: Lauren D'Amond, P.E.
ISSUE DATE: JULY 2025
SOLICITATION NO.: W912P8-25-B-A026
CONTRACT NO.:
SCALE: ANSI D

US ARMY CORPS OF ENGINEERS

H448601_G-001.dgn

FRESHWATER BAYOU WATERWAY
FRESHWATER BAYOU LOCK
NEW SHOPS BUILDING
VERMILION PARISH, LA

PANEL SCHEDULE

SHEET ID
E-301

READY FOR ADVERTISEMENT

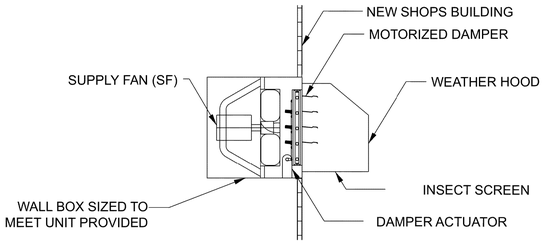

VENTILATION EQUIPMENT SECTION VIEW

1/2" = 1'-0"

0 1' 2' 4'

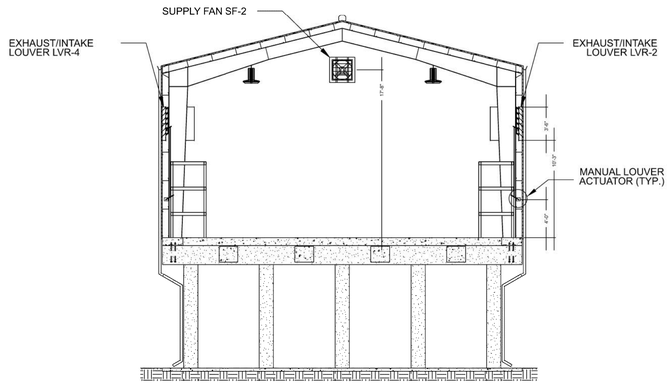

EQUIPMENT SCHEDULE

NAMES	DESCRIPTION (MANUFACTURER'S CATALOG AS A BASIS OF DESIGN)	REMARK
ROLLING DOOR (RUD)	ROLL-UP DOOR OPERATOR DESIGN BASIS ASSUMED 0.5 HP. OPERATOR SHALL INCORPORATE A LOCKABLE MANUAL CHAIN WHEEL OPERATOR INTERNAL TO THE BUILDING.	WALL MOUNTED
SUPPLY FANS (SF)	2 SUPPLY FANS, WALL-MOUNTED DIRECT DRIVE TYPE WITH COLLAR AND MOTORIZED DAMPERS (N.C.) AND WEATHER HOODS, SF-1 & SF-2 CONTROLLED VIA LOW-VOLTAGE THERMOSTAT 24VAC IN EITHER AUTO OR MANUAL MODE. THERMOSTATS SET TEMPERATURES TO BE FIELD ADJUSTABLE, WITH EACH THERMOSTAT TO BE WALL MOUNTED LOCATED 48-60" ABOVE FINISHED FLOOR LEVEL IN GENERAL VICINITY OF THE CONTROLLED FAN. PROVIDE FOR MANUAL CONTROL WALL-MOUNTED 12 HOUR SPRING WOUND DIAL TIMER SWITCHES.	WALL MOUNTED
OPERABLE EXHAUST/INTAKE LOUVER (LV)	4 MANUALLY OPERATED LOUVERS, ORIENTED FOR EXHAUST ON OPERATION OF SUPPLY FANS, PROVIDING INTAKE AIR IN CONJUNCTION WITH RIDGE VENT WHEN FANS NOT OPERATING. HIGH FREE AREA, RESISTANCE TO RAIN, HEAVY GAUGE EXTRUDED 6063-T5 ALUMINUM, SIZED 42"(H)X42"(W) AND INSIDE MOUNT INSECT SCREEN IN REMOVABLE ALUMINUM FRAME, OPERATED WITH EXTENSION MOUNTED 48" ABOVE FLOOR LVL.	MANUAL OPERATOR

FAN NO.	RPM	CFM	DRIVE	MOTOR			
				MAX HP	VOLT	PH-CY	MAX SONES @ FREE AIR
SF-1, SF-2	850-900	6000 @ 3.75 IN. WG	DIRECT	3/4	120	1-60	30
*DESIGN BASIS ASSUMES NOMINAL 30 INCH DIA. FAN SIZE, MINOR VARIATIONS MAY BE ACCEPTABLE UPON REVIEW.							

VENTILATION EQUIPMENT SECTION VIEW

A

1/8" = 1'-0"

0 4' 8' 16'

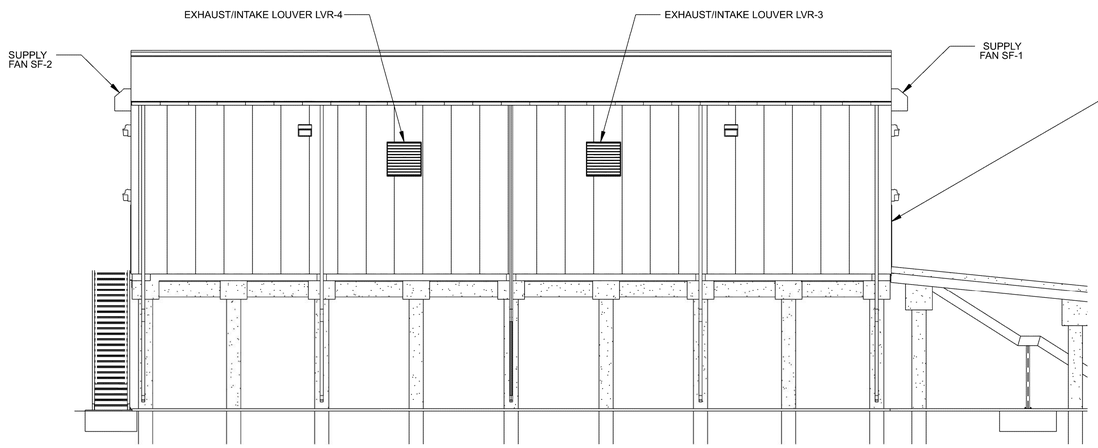

WEST EXTERIOR ELEVATION

1/8" = 1'-0"

0 4' 8' 16'

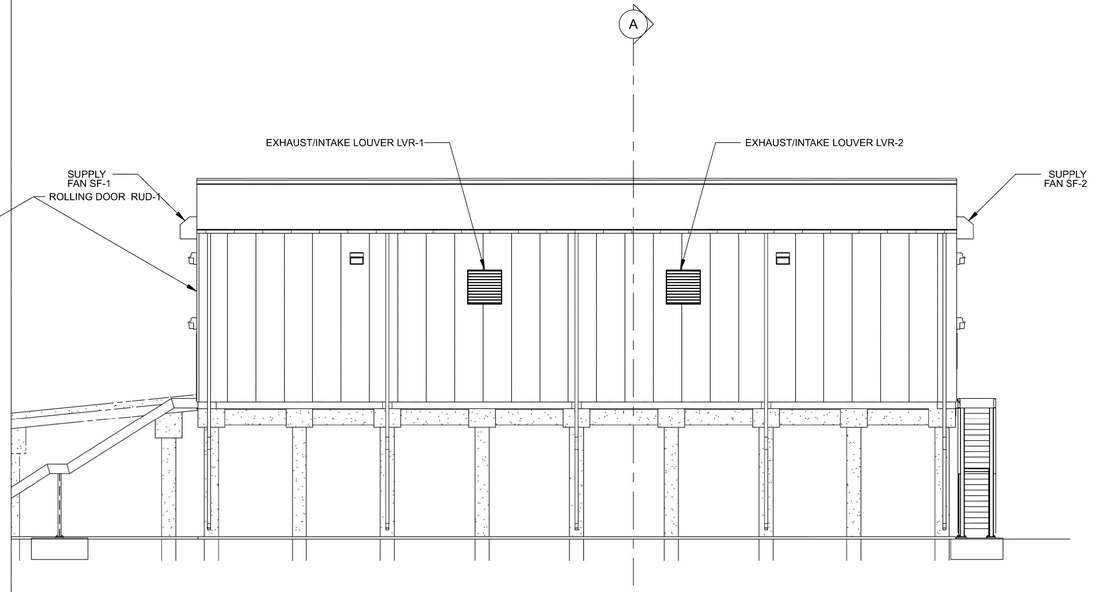

EAST EXTERIOR ELEVATION

1/8" = 1'-0"

0 4' 8' 16'

US Army Corps of Engineers ®

MARK	DESCRIPTION	DATE

DESIGNED BY: Lexsani Orth
DRAWN BY: SDB
CHECKED BY: Wayne Duplantier, E.I.
SUBMITTED BY: Lauren D'Armond, P.E.
SIZE: ANSI D
ISSUE DATE: JULY 2025
SOLICITATION NO.: W912P8-25-B-A026
CONTRACT NO.: WXXXXX-XX-X-XXXX

US ARMY CORPS OF ENGINEERS
NEW ORLEANS DISTRICT
NEW ORLEANS, LA

FRESHWATER BAYOU WATERWAY
FRESHWATER BAYOU LOCK
NEW SHOPS BUILDING
VERMILION PARISH, LA

MECHANICAL EQUIPMENT
EAST AND WEST EXTERIOR ELEVATIONS

SHEET ID

M-201

READY FOR ADVERTISEMENT

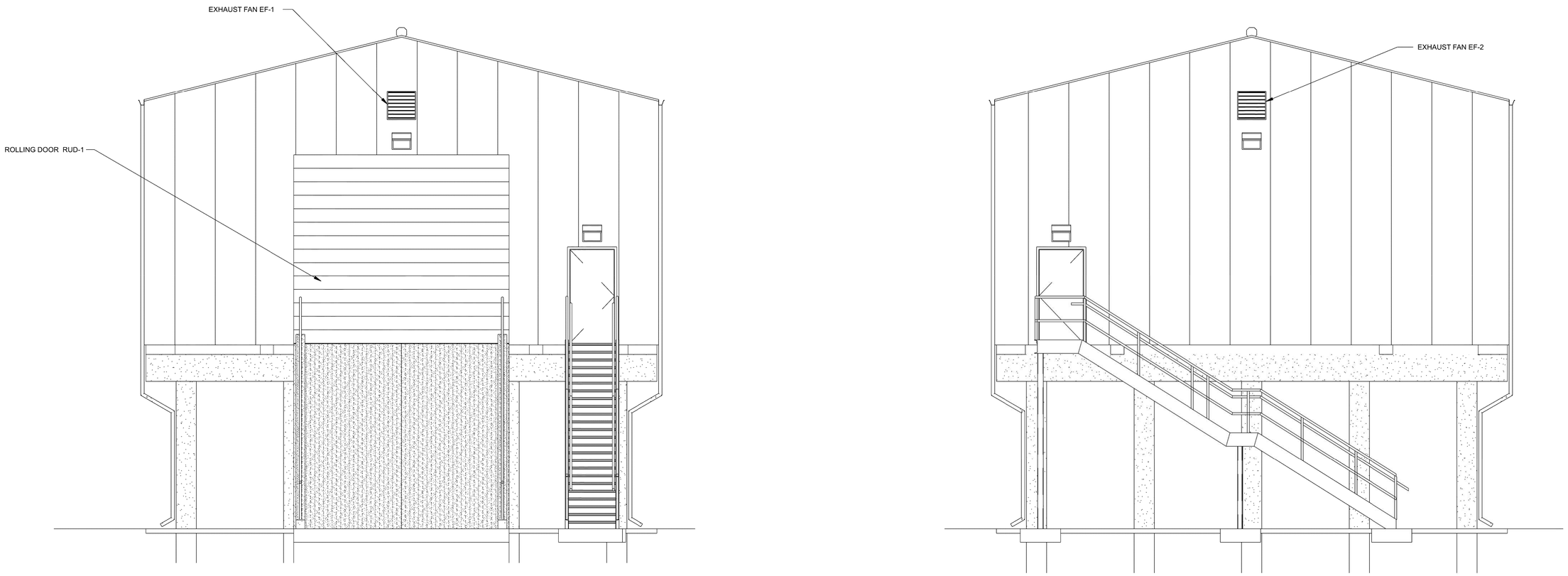

US Army Corps of Engineers ®

MARK	DESCRIPTION	DATE

US ARMY CORPS OF ENGINEERS

DESIGNED BY: LEONARD ORTH, E.I.
DRAWN BY: SDB
CHECKED BY: WAYNE DUPLANTIER, E.I.
SUBMITTED BY: Lauren K. D'Armond, P.E.
SIZE: ANSI D
FILE NAME: H448601_M-202.dgn
ISSUE DATE: JULY 2025
SOLICITATION NO.: W912P8-25-B-A026
CONTRACT NO.:

FRESHWATER BAYOU WATERWAY
FRESHWATER BAYOU LOCK
NEW SHOPS BUILDING
VERMILION PARISH, LA

FRAMING ELEVATIONS

SHEET ID
M-202

READY FOR ADVERTISEMENT

Cone Penetration Test — FBL-1C

Freshwater Bayou Locks
Project No: FBL

Date: Aug. 8, 2022
Operator: Lewis
Drilling Agency:

Probe ID/Net Area Ratio: DDG1431 / 0.8

Elevation: 4.7
Water Depth: 0
Total Depth: 120.3 ft

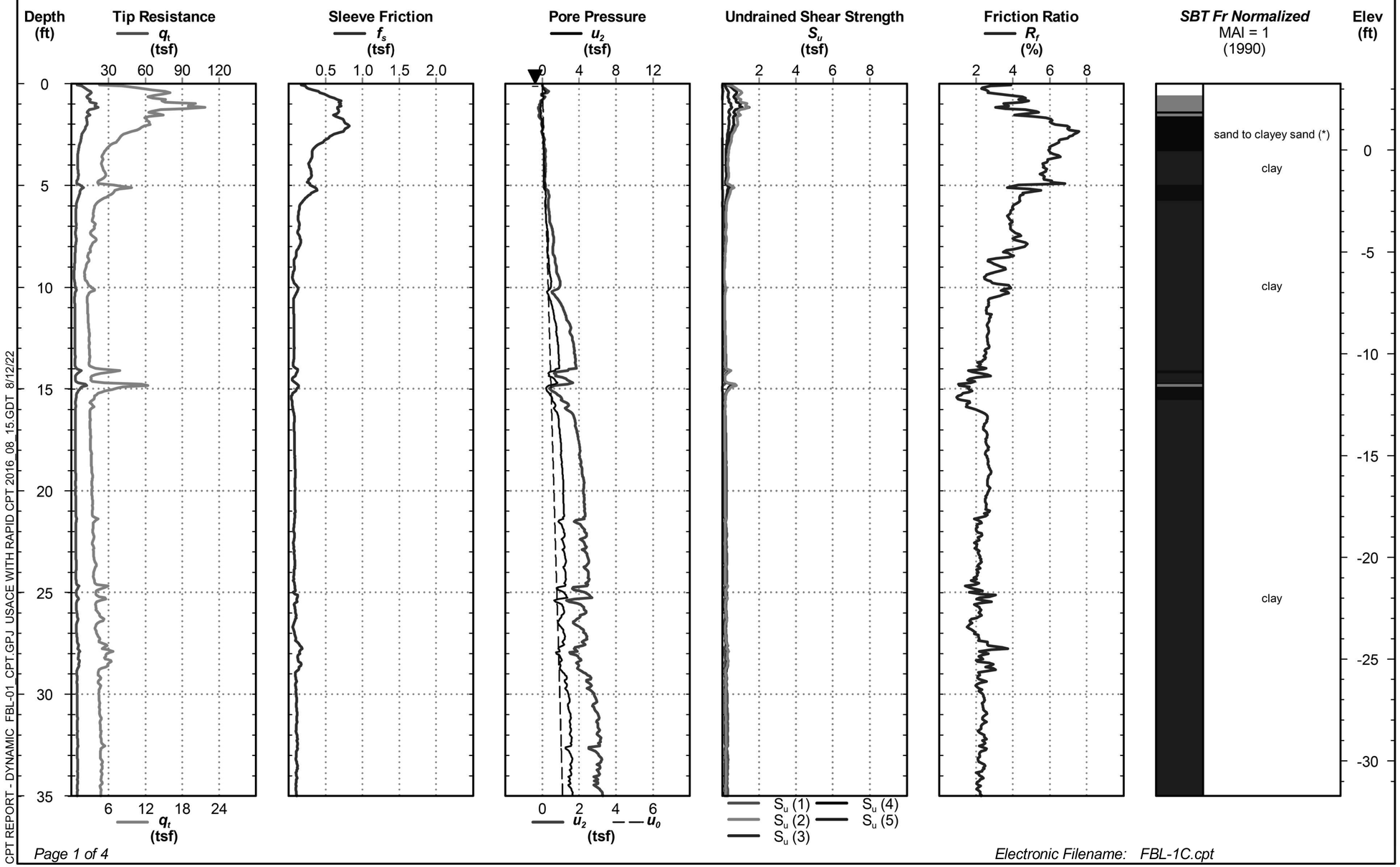

CPT REPORT - DYNAMIC FBL-01_CPT.GPJ USACE WITH RAPID.CPT 2016_08_15.GDT 8/12/22

Electronic Filename: FBL-1C.cpt

US Army Corps of Engineers ®

MARK	DESCRIPTION	DATE

DESIGNED BY:
DRAWN BY: SDB
CHECKED BY:
ISSUE DATE: JULY 2025
SOLICITATION NO.: W912P8-25-B-A026
CONTRACT NO.:
SUBMITTED BY: Lauren K. D'Armond, P.E.
DATE:
ANSI D
FILE NAME: H448601_B-101.dgn

US ARMY CORPS OF ENGINEERS

FRESHWATER BAYOU WATERWAY
FRESHWATER BAYOU LOCK
NEW SHOPS BUILDING
VERMILION PARISH, LA

BORING LOG 1 OF 4

SHEET ID
B-101

READY FOR ADVERTISEMENT

Cone Penetration Test

FBL-1C

Freshwater Bayou Locks
Project No: FBL

Date: Aug. 8, 2022
Operator: Lewis
Drilling Agency:

Probe ID/Net Area Ratio: DDG1431 / 0.8

Elevation: 4.7
Water Depth: 0
Total Depth: 120.3 ft

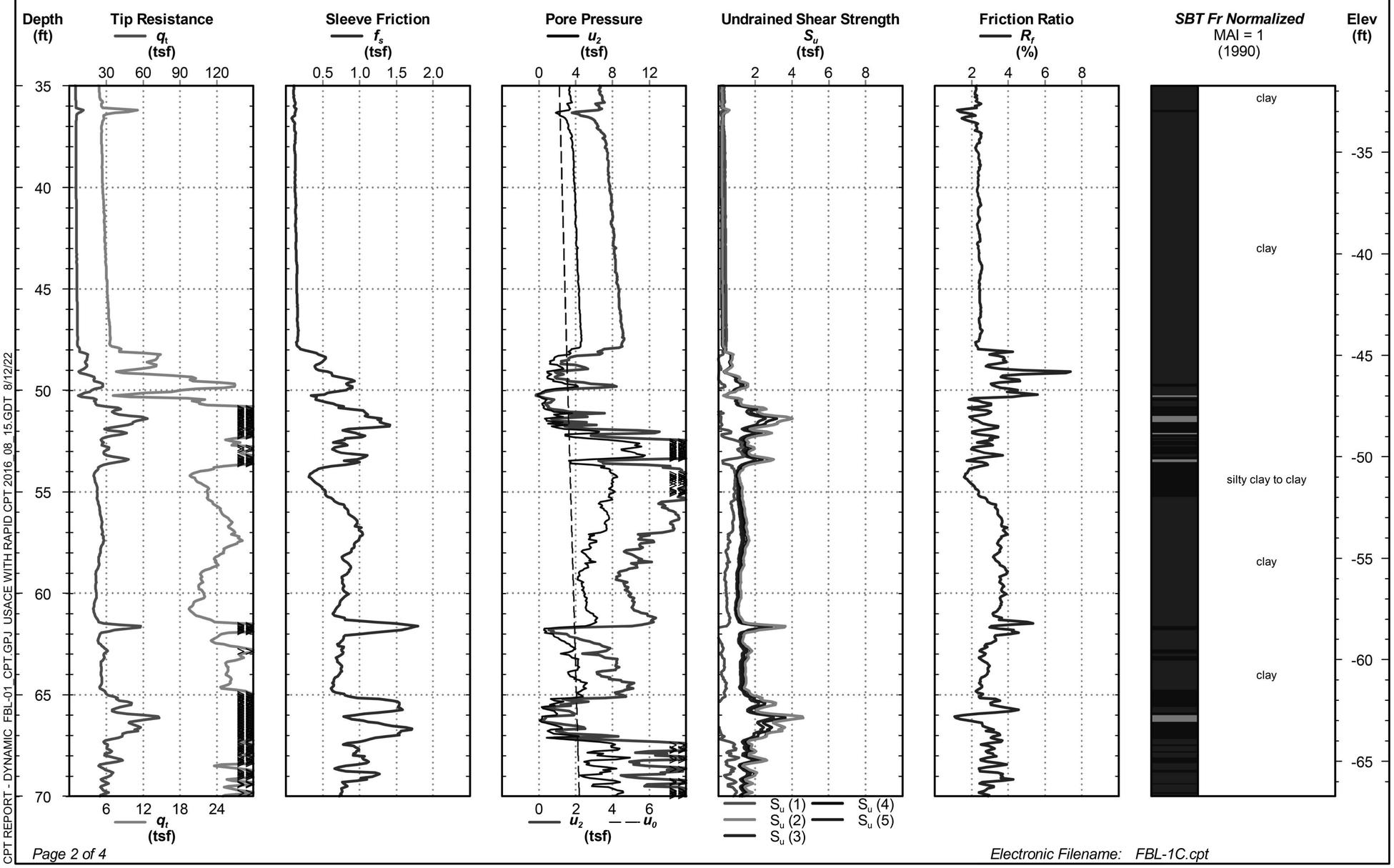

CPT REPORT - DYNAMIC FBL-01_CPT.GPJ USACE WITH RAPID CPT 2016_08_15.GDT 8/12/22

Page 2 of 4

Electronic Filename: FBL-1C.cpt

US Army Corps of Engineers ®

MARK	DESCRIPTION	DATE

DESIGNED BY:
DRAWN BY: SDB
CHECKED BY:
ISSUE DATE: JULY 2025
SOLICITATION NO.: W912P8-25-B-A026
CONTRACT NO.:
SUBMITTED BY: Lauren K. D'Armond, P.E.
SIZE: ANSI D
FILE NAME:

US ARMY CORPS OF ENGINEERS

FRESHWATER BAYOU WATERWAY
FRESHWATER BAYOU LOCK
NEW SHOPS BUILDING
VERMILION PARISH, LA

BORING LOG 2 OF 4

H448991_B-102.dgn

SHEET ID
B-102

READY FOR ADVERTISEMENT

Cone Penetration Test

FBL-1C

Freshwater Bayou Locks
Project No: FBL

Date: Aug. 8, 2022
Operator: Lewis
Drilling Agency:

Probe ID/Net Area Ratio: DDG1431 / 0.8

Elevation: 4.7
Water Depth: 0
Total Depth: 120.3 ft

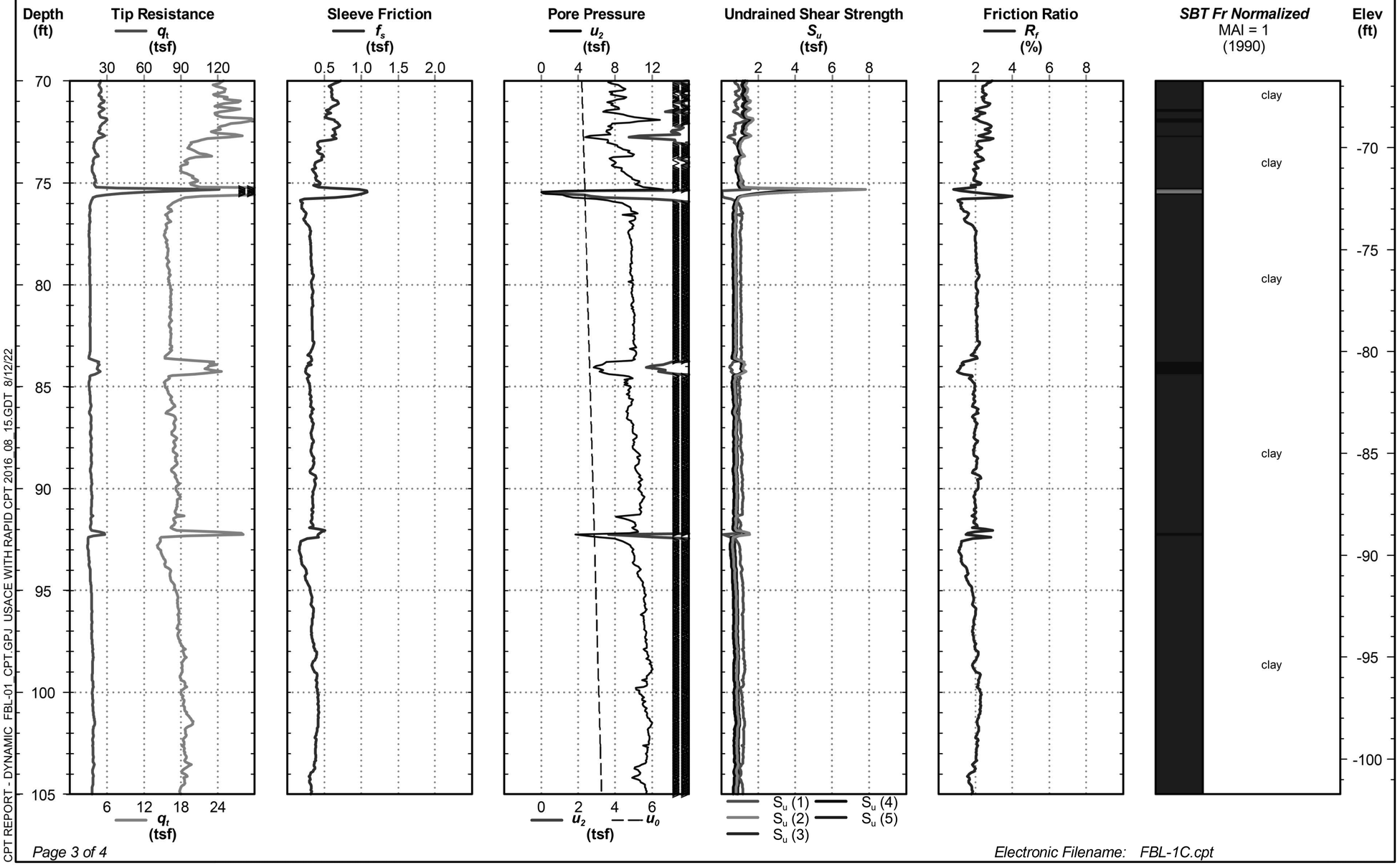

Page 3 of 4

Electronic Filename: FBL-1C.cpt

CPT REPORT - DYNAMIC FBL-01 CPT.GPJ USACE WITH RAPID CPT 2016_08_15.GDT 8/12/22

US Army Corps of Engineers ®

MARK	DESCRIPTION	DATE

DESIGNED BY:
DRAWN BY: SDB
CHECKED BY:
ISSUE DATE: JULY 2025
SOLICITATION NO.: W912P8-25-B-A026
CONTRACT NO.:
SUBMITTED BY: Lauren K. D'Armond, P.E.
SIGNATURE
ANSI D
FILE NAME:

US ARMY CORPS OF ENGINEERS

H44560 I_B-103.dgn

FRESHWATER BAYOU WATERWAY
FRESHWATER BAYOU LOCK
NEW SHOPS BUILDING
VERMILION PARISH, LA

BORING LOG 3 OF 4

SHEET ID
B-103

READY FOR ADVERTISEMENT

Cone Penetration Test — FBL-1C

Freshwater Bayou Locks
Project No: FBL

Date: Aug. 8, 2022
Operator: Lewis
Drilling Agency:

Probe ID/Net Area Ratio: DDG1431 / 0.8

Elevation: 4.7
Water Depth: 0
Total Depth: 120.3 ft

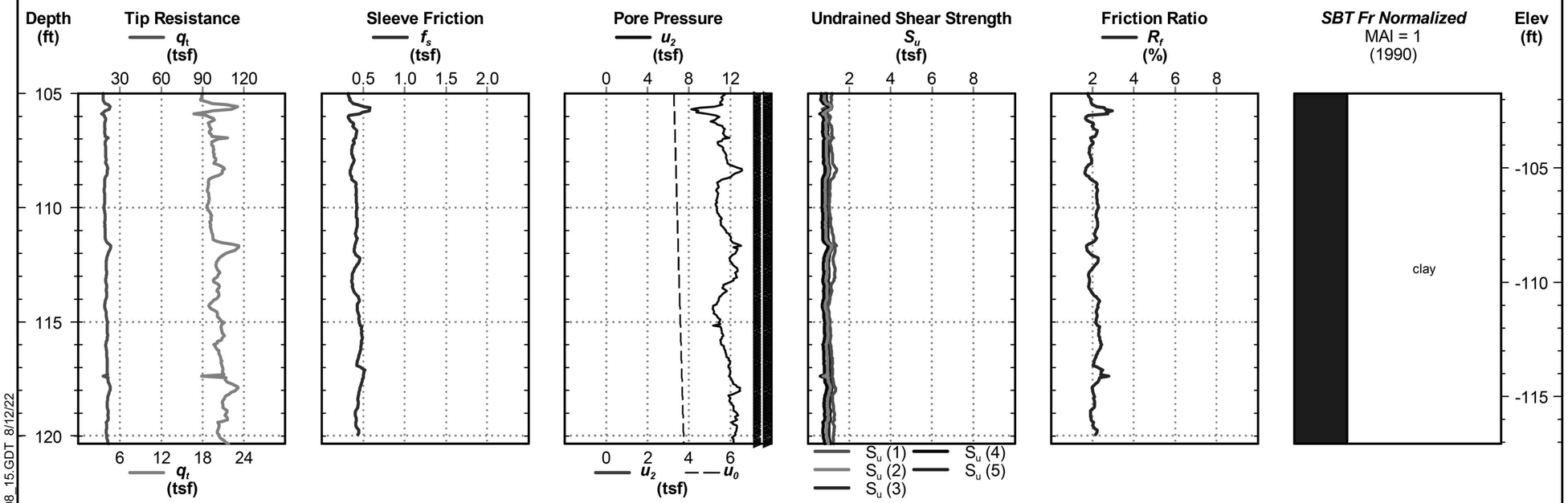

Electronic Filename: FBL-1C.cpt

CPT REPORT - DYNAMIC FBL-01_CPT.GPJ USACE WITH RAPID CPT 2016_08_15.GDT 8/12/22

US Army Corps of Engineers ®

MARK	DESCRIPTION	DATE

DESIGNED BY:
DRAWN BY: SDB
CHECKED BY:
ISSUE DATE: JULY 2025
SOLICITATION NO.: W912P8-25-B-A026
CONTRACT NO.:
SUBMITTED BY: Lauren K. D'Armond, P.E.
SIZE: ANSI D
FILE NAME: H448601_B-104.dgn

US ARMY CORPS OF ENGINEERS

FRESHWATER BAYOU WATERWAY
FRESHWATER BAYOU LOCK
NEW SHOPS BUILDING
VERMILION PARISH, LA

BORING LOG 4 OF 4

SHEET ID
B-104

READY FOR ADVERTISEMENT

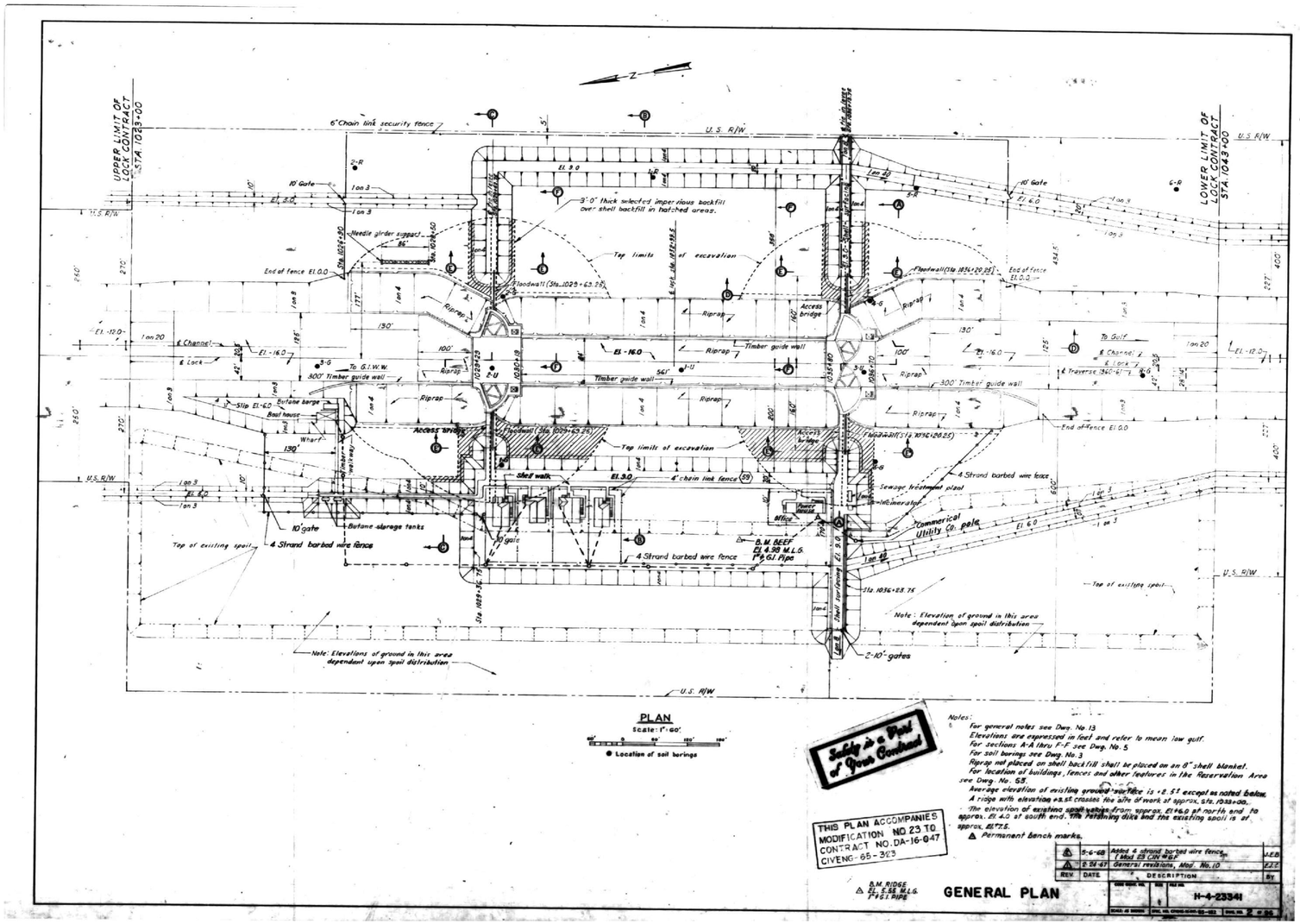

US Army Corps of Engineers ®

MARK	DESCRIPTION	DATE

DESIGNED BY:
DRAWN BY: SDB
CHECKED BY:
ISSUE DATE: JULY 2025
SOLICITATION NO.: W912P8-25-B-A026
CONTRACT NO.:
SUBMITTED BY: Lauren K. D'Amond, P.E.
SIZE: ANSI D
FILE NAME:

US ARMY CORPS OF ENGINEERS

FRESHWATER BAYOU WATERWAY
FRESHWATER BAYOU LOCK
NEW SHOPS BUILDING
VERMILION PARISH, LA

REFERENCE SHEET

SHEET ID
REF-100

READY FOR ADVERTISEMENT

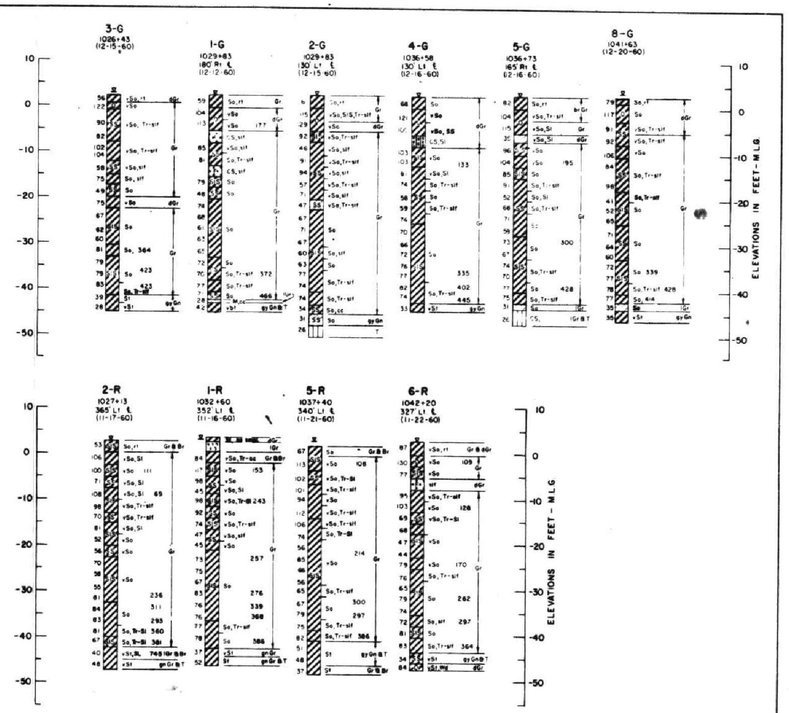

GENERAL TYPE BORINGS

LEGEND

- • Unconfined Compression Shear Test
- x $\frac{3}{4}$"X1$\frac{3}{4}$" Laboratory Vane Shear Test
- Ⓒ 2$\frac{1}{2}$"diameter X 1" Consolidation Test
- C' 4.25" diameter X 1.2" Consolidation Test
- Ⓤ 1.4"x 1.4"x 3" (UU) Triaxial Shear Test
- Ⓒ 1.4"x 1.4"x 3" (CU) Triaxial Shear Test
- Ⓢ 2.7"x 2.7" (CD) Direct Shear Test
- Ⓣ C'Q, R & S Test Series
- RX Remolded Vane Shear Test
- R-C Remolded Consolidation Test
- Pc Approximate Preconsolidation Pressure
- Ō Effective Normal Stress
- Pv Effective Overburden Pressure
- δ' Unit Weight of Soil-Water System
- ▼ Mean Low Water Table

NOTES:

For location of borings see Plate 2
For soil boring legend see Plate A
General type soil samples were taken with a 1-7/8" I.D. core barrel sampler
Undisturbed soil samples were taken with a 5" I.D. steel tube piston-type sampler

FRESHWATER BAYOU L.A.
FRESHWATER BAYOU LOCK

LOGS OF BORINGS

US Army Corps of Engineers ®

MARK	DESCRIPTION	DATE

DESIGNED BY:
DRAWN BY: SDB
CHECKED BY:
SUBMITTED BY: Lauren K. DiArmond, P.E.
ANSI D
ISSUE DATE: JULY 2025
SOLICITATION NO.: W912P8-25-B-A026
CONTRACT NO.:
SCALE:
FILE NAME:

US ARMY CORPS OF ENGINEERS

FRESHWATER BAYOU WATERWAY
FRESHWATER BAYOU LOCK
NEW SHOPS BUILDING
VERMILION PARISH, LA

REFERENCE SHEET

SHEET ID
REF-101

READY FOR ADVERTISEMENT