PAFI-MTP-002 Rev B

FAA Piston Aviation Fuels Initiative (PAFI) Materials Compatibility Test Plan

Federal Aviation Administration
William J. Hughes Technical Center for Advanced Aerospace
Aviation Research Division
Atlantic City International Airport
New Jersey 08405

Rev: B

Date: February 15, 2026

U.S. Department of Transportation
Federal Aviation Administration

Contents

1 Introduction 2

2 Scope 2

2.1. Provisos 4

3 Objectives 4

4 PAFI materials test plan 7

5 Applicable MIL, FAA, SAE & ASTM requirements 9

5.1. Military handbooks & standards 9

5.2. FAA advisory circulars & orders 10

5.3. Federal test methods 10

5.4. SAE standards 10

5.5. ASTM guidance & practices 11

6 Description of test articles 13

6.1. MIL-DTL-6000 hose – aircraft hose 13

6.2. MIL-DTL-5593 hose – aircraft hose 13

6.3. Fuel bladders AKA fuel cells 14

6.4. Polysulfide sealants and Buna-N topcoat testing 14

6.5. Additional materials; nitrile, fluorosilicone, and fluorocarbon O-rings 15

6.6. Paint test 15

6.7. Fabric test 16

6.8. Distribution hoses 16

6.9. Composite resins, adhesives, and fabric 17

6.10. Distribution filters and water separators 17

6.11. Vendor supplied materials 17

6.12. Wing fuel tanks 18

6.13. AMS-G-6032 gasoline and oil resistance grease 18

7 Conformity 18

7.1. Test fuels 18
7.2. Samples 18
7.3. Specimens 18
8 Safety procedures 19
8.1. Sample fill (reference ASTM D4057, Section 5.2) 19
8.2. Static charge (reference ASTM D4057) 19
8.2.1. Grounding (D4057-12, Section 5.4.1) 19
8.2.2. Personal attire (D4057, Section 4.5.2) 20
8.3. Vapor hazards 20
8.4. Personal protective equipment 20
8.5. Hydrostatic testing equipment 20
9 Pre-test requirements 21
9.1. Specimen identification 21
9.2. Pre-exposure baseline data 21
9.3. Pre-exposure photographs 23
9.4. Laboratory notebook 24
10 Test facility & equipment 24
10.1. Temperature controlled areas 24
10.1.1. Elevated temperature-controlled areas – ovens 24
10.2. Access controlled area 25
10.2.1. Access control 25
10.2.2. Controlled access space 25
10.3. Tensiometer with extensometers 25
10.4. Calibrated / validated laboratory measuring equipment 25
10.5. Sample jars 26
10.6. Hose stand rig 27
10.7. ASTM D381 air jet evaporator 27
10.8. Muffle furnace 27

10.9. Bladder (fuel cell) exposure rigs 27
10.9.1. Simulated stand rig 27
10.10. Flow sheet manufacture 27
10.11. ASTM D395 compression blocks 28
10.12. Industry standard fabric test frames 28
10.13. Hydrostatic testing equipment 30
10.14. Composite manufacturing equipment 30
10.15. Glass transition measurement equipment 31
10.16. Facility for distribution filter systems 31
10.17. Centrifuge 32
10.18. Shaker table 32
11 Test witnessing 32
11.1. FAA 32
12 Test procedure – Task 1, MIL-DTL-6000 and MIL-DTL-5593 hose 33
12.1. Hose property testing 33
12.1.1. Materials 33
12.1.2. Specimen preparation 33
12.1.3. Exposure 34
12.1.4. Post exposure measurements 34
12.1.5. Calculations 35
12.2. Hose internal soak testing 36
12.2.1. Materials 36
12.2.2. Specimen preparation 36
12.2.3. Exposure 37
12.2.4. Post exposure measurements 38
12.2.5. Calculations 39
13 Test procedure – Task 2 bladder testing per TSO-C80 39
13.1. General materials 39

13.2. Simulated stand test 40
13.2.1. Test specific materials 40
13.2.2. Specimen preparation 40
13.2.3. Exposure 40
13.2.4. Post test measurements 41
13.2.5. Calculations 42
13.3. Volume swell 43
13.3.1. Test specific materials 43
13.3.2. Specimen Preparation 43
13.3.3. Exposure 43
13.3.4. Post test measurements 43
13.3.5. Calculations 43
14 Test procedure – Task 3 polysulfide tank sealants and Buna-N topcoat testing 44
14.1. Materials 44
14.2. Physical properties changes 45
14.2.1. Specimen preparation 45
14.2.2. Exposure 45
14.2.3. Post test measurements 47
14.2.4. Volume change 47
14.2.5. Tensile/elongation 47
14.2.6. Hardness 47
14.2.7. Calculations 48
14.2.8. Volume change 48
14.2.9. Tensile/elongation change 48
14.2.10. Hardness change 49
14.3. Peel strength testing (sealants 1-7, 9) 49
14.3.1. Specimen preparation 49
14.3.2. Exposure 53

14.3.3. Class A and B sealants (Sealants 1-7 and 9, Appendix D) 53
14.3.4. Post test measurements.....54
14.3.5. Calculations.....56
14.4. Buna-N topcoat peel strength (sealant 10).....56
14.4.1. Specimen preparation.....56
14.4.2. Exposure.....57
14.4.3. Post test measurements.....57
14.4.4. Calculations.....57
14.5. Buna-N topcoat non-volatile content.....57
14.5.1. Specimen preparation.....57
14.5.2. Exposure.....57
14.5.3. Post test measurements.....58
14.5.4. Calculations.....59
15 Test procedure – Task 4 additional elastomer testing.....59
15.1. Compression set.....59
15.1.1. Materials.....59
15.1.2. Specimen preparation.....60
15.1.3. Exposure testing.....60
15.1.4. Post test measurements.....61
15.1.5. Calculations.....61
15.2. Tensile/elongation and hardness.....61
15.2.1. Materials.....61
15.2.2. Specimen preparation.....62
15.2.3. Exposure testing.....62
15.2.4. Post exposure measurements.....62
15.2.5. Calculations.....63
16 Test procedure – Task 5 paint staining and adhesion testing.....64
16.1. Staining and adhesion tests.....64

16.1.1. Materials 64
16.1.2. Specimen preparation 65
16.2. Adhesion exposure testing 65
16.2.1. Post exposure measurements 66
16.2.2. Calculations 67
16.3. Paint staining exposure testing 67
16.3.1. Post exposure measurements 69
16.3.2. Calculations 69
17 Test procedure – Task 6 fabric testing 69
17.1. Fabric sample construction 69
17.1.1. Materials 69
17.1.2. Specimen preparation 71
17.2. Test execution 76
17.2.1. Materials 76
17.2.2. Specimen preparation 76
17.2.3. Exposure 78
17.2.4. Post exposure measurements 79
17.2.5. Calculations 80
18 Test procedure – Task 7 distribution hose testing 80
18.1. Physical properties and adhesion 80
18.1.1. Materials 80
18.1.2. Specimen preparation 81
18.1.3. Physical properties (density, volume, and hardness) 81
18.1.4. Inner liner adhesion testing 81
18.1.5. Exposure 82
18.1.6. Post exposure measurements 82
18.1.7. Calculations 84
18.2. 16 week static exposure and proof pressure testing 85

18.2.1. Materials 85
18.2.2. Specimen preparation 85
18.2.3. Exposure 86
18.2.4. Post exposure measurements 86
18.2.5. Visual inspections 86
18.2.6. Perform hydrostatic proof pressure testing 87
19 Test procedure – Task 8 composite testing 87
19.1. Composite resin screening test 88
19.1.1. Materials 89
19.1.2. Specimen preparation 89
19.1.3. Exposure 90
19.1.4. Post exposure measurements 90
19.2. Properties testing – finished composites 90
19.2.1. Materials 90
19.2.2. Specimen preparation 91
19.2.3. Test panels lay-up 91
19.2.4. Laminating resin coupon construction 93
19.2.5. Prepreg coupon construction 93
19.2.6. Adhesive joint coupon construction 93
19.2.7. Surface preparation 94
19.2.8. Adhesive preparation 94
19.2.9. Apply adhesive 95
19.2.10. Cutting laminates into specimens 97
19.2.11. Labeling specimens 98
19.2.12. Adding bonded tabs to specimens 98
19.2.13. Traveler coupons 100
19.2.14. Rectangular tensile coupons 100
19.2.15. Short beam cantilever specimens 101

19.2.16. V-notch shear specimens 103
19.2.17. Adhesive joint samples 104
19.2.18. Pre-exposure measurements 104
19.2.19. Dimensions 104
19.2.20. Density 104
19.2.21. Hardness 105
19.2.22. Photographic/visual documentation 106
19.2.23. Tensile, strain, and modulus 106
19.2.24. Calculating test results 107
19.2.25. Short beam cantilever 108
19.2.26. Calculating test results 109
19.2.27. V-notch shear strength 110
19.2.28. Calculating test results 113
19.2.29. Adhesion strength (lap shear) 114
19.3. Exposure 114
19.4. Post test exposure 114
20 Distribution filter, coalescer, & tank coatings 115
20.1. General materials 115
20.2. Pleated filter test 115
20.2.1. Test specific materials 115
20.2.2. Specimen preparation 116
20.2.3. Exposure 116
20.2.4. Post test measurements 116
20.2.5. Calculations 116
20.3. Water coalescer test 116
20.3.1. Test specific materials 117
20.3.2. Specimen preparation 117
20.3.3. Exposure 117

20.3.4. Post test measurements 117
20.3.5. Calculations 118
20.4. Water reaction testing 118
20.5. Interfacial tension (surface tension) 118
20.5.1. Calculations 119
20.6. Material migration by vacuum filtration 119
20.6.1. Calculations 121
20.7. Distribution tank coatings 121
20.7.1. Test specific materials 121
20.7.2. Specimen preparation 121
20.7.3. Exposure 122
20.7.4. Post test measurements 122
20.7.5. Calculations 122
21 Vendor supplied materials 122
21.1. General materials 122
21.2. Flat stock 123
21.3. Tensile/elongation, hardness, density, and volume 123
21.3.1. Materials 123
21.3.2. Specimen preparation 123
21.3.3. Exposure testing 124
21.3.4. Post exposure measurements 124
21.3.5. Calculations 125
21.4. Shaped specimens 126
21.4.1. Materials 126
21.4.2. Specimen preparation 126
21.4.3. Exposure testing 127
21.4.4. Post exposure measurements 127
21.4.5. Calculations 128

22 Manufacturer controlled wing test 128

22.1. Test specific materials.....128

22.2. Specimen preparation.....129

22.3. Exposure 129

22.4. Post test measurements.....129

23 Grease resistance testing.....130

23.1. Grease solubility 130

23.1.1. Materials.....130

23.1.2. Specimen preparation.....130

23.1.3. Post exposure measurements.....131

23.1.4. Calculations.....131

23.2. Grease condition.....131

23.2.1. Materials.....131

23.2.2. Specimen preparation.....132

23.2.3. Exposure testing 132

23.2.4. Post exposure measurements.....132

23.2.5. Calculations.....132

24 Pass/fail criteria 132

24.1. Task 1 – MIL-DTL-6000 hose test.....133

24.1.1. Hose property testing 133

24.1.2. Hose internal soak testing 133

24.2. Task 2 – Bladder 133

24.3. Task 3 – Polysulfide testing.....133

24.4. 140

24.5. Task 4 – Elastomeric testing (o-rings).....141

24.6. Task 5 – Paint testing.....142

24.7. Task 6 – Fabric testing 142

24.8. Task 7 – Distribution hose testing 142

24.9. Task 8 – Composite resin and fabric 143

24.9.1. Initial screening test of neat resin and adhesives 143

24.9.2. Physical property testing of finished composites 143

24.10. Task 9 – Distribution fuel filters/coalescers 143

24.10.1. Housings 143

24.10.2. Filter cartridges 143

24.10.3. Coalescer cartridges 144

24.11. Task 10 – Vendor supplied materials 144

24.12. Task 11 – Wing tank testing 144

24.13. Task 12 – Grease resistance 144

24.13.1. Grease solubility 144

24.13.2. Grease condition 144

25 Test personnel 144

26 Test results report 145

27 References 145

28 Appendices 146

Table of appendices

Appendix A – Test Fuel CoA Requirements 144

Appendix B – Flow Path Of Testing Requirements 146

Appendix C – Production of AS5127/1C Flow Sheets 149

Appendix D – Integral Fuel Tank Sealants 151

Appendix E – Additional Materials as O-rings 158

Appendix F – Paint Systems 162

Appendix G – Fabric Systems 167

Appendix H - Large Distribution Hoses 170

Appendix I – Composites Materials 174

Appendix J – Distribution Filters/Coalescers and Tank Coatings 182

Appendix K – Vendor Supplied Materials 187

Table of figures

Figure 1 - Fabric Frame Construction Drawing 29
Figure 2 - Finished Fabric Frame 30
Figure 3 - AS5127/1C Figure 22 - Five Inch Peel Specimen Configuration 53
Figure 4 - AS5127/1C Figure 23 - Four Inch Peel Specimen Configuration 53
Figure 5 - AS5127/1C Figure 24 - Peel Strength Test 56
Figure 6 - Example of Panel in a Jar 66
Figure 7 - Example Fuel Dripping Rig for Paint Staining Test 68
Figure 8 - Preparing Frame for Fabric Assembly 71
Figure 9 - Laying Fabric Over Frame with Overlap for Seam 72
Figure 10 - Example Showing the Glued (bottom) and Unglued (top) Seams 74
Figure 11 - Example of Finished Fabric System Frame (Poly-Fiber) 76
Figure 12 - Layout of Tensile Strips 77
Figure 13 - Tensile Strip with Glued Support 77
Figure 14 - Wrapping Tensile Strips on Pins for Tensile Testing (ASTM D5035-11, Figure 1). 79
Figure 15 - Set up of Adhesion Test in Grips 83

Figure 16 - Example of fitting and cap 85
Figure 17 - Standard Adhesive Test Panel (ASTM D3163-01, Figure 1) 96
Figure 18 - Example of Edges Needing Surface Grinding 98
Figure 19 - Example of a Tabbed Tensile Coupon (ASTM D3039-17, Figure 2)..... 99
Figure 20 - Example of a Tabbed V-Notch Coupon (ASTM D5379-19, Figure 8) 99
Figure 21 - Engineering Drawing of Tensile Coupons (ASTM D3039-17, Figure 2) 101
Figure 22 - Engineering Drawing of Short Beam Cantilever Coupons (ASTM D2344-22, Figure 2) 102
Figure 23 - Engineering Drawing of V-Notched Test Coupon (ASTM D5379-19, Figure 2) ... 103
Figure 24 - Example of a Water Displacement Density Measurement 105
Figure 25 - Example of a Barcol Impressor Hardness Tester 106
Figure 26 - Short Beam Test Specimen Inserted for Test (ASTM D2344-22, Figure 6) 109
Figure 27 - Placement of Strain Gages on V-Notch Coupons (ASTM D5379-19, Figure 6)..... 110
Figure 28 - V-Notched Beam Test Fixture Schematic (ASTM D5379-19, Figure 3) 111
Figure 29 - Specimen Placement in the Fixture (ASTM D5379-19, Figure 10) 112
Figure 30 - Pleated Paper Filter 115
Figure 31 – Velcon OS 51288 Coalescer/Separator Cartridge 117

Table of tables

Table 1 – Calibration and Validation References 26
Table 2 – Pass/Fail Criteria of Fuel Tank Sealants 135
Table 3 – Pass/Fail Criteria of Buna-N Topcoat 140
Table 4 – Pass/Fail Criteria of Elastomeric O-Rings 141

Glossary

Definitions, terminology and abbreviations specific to this document and to FAA nomenclature are summarized in the following table.

Term	Definition
Calibration	Calibration is a set of actions that establishes that the instrument being calibrated is equal to or reports values equal to a standard. The unknown, the instrument being calibrated, will be checked against a known, the standard, at several different points and adjustments made to the unknown to bring it into alignment with the standard.
Composite	Within this testing, the following concept is meant by the term "composite". Composite structures are formed by combining disparate materials together to form an overall structure with properties different from the individual materials used to construct the final structure. For example, a "fiberglass aircraft" is made of a glass fiber encapsulated in a resin matrix, creating a composition material or composite. Composite does not refer to the chemistry of the resin or fabric.
Exposure	Within this document, the term exposure is the placement of specimens in a test fluid at a given temperature for a given amount of time. Exposure also includes the application of test fluid to the surface of the fabric systems using a fuel reservoir and a cotton cloth.
Sample	Within this document the following concept is meant by the term "sample". A sample is the specific material to be prepared as specimens and exposed to test fluids. For example, Manganese-cured polysulfide is a sample, and dichromate-cured polysulfide is a second sample.
Sample set	A sample set is all of the individual specimens and all of the test fluids comprising a set of samples to generate a set of data. For example, five nitrile O-rings and five nitrile dimension change specimens in 100LL and five nitrile O-rings and five nitrile dimension change specimens in an experimental test fuel comprise the "Nitrile Sample Set."
Specimen	Within this document the following concept is meant by the term "specimen". Specimens are the individual pieces prepared from the sample material, i.e., the five individual test pieces prepared from the MIL-DTL-6000 hose or the single test panel cut from a Meggitt bladder are the test specimens.
Validation	As opposed to Calibration, validation is the act of documenting that an instrument will actually and consistently give expected results. This may be done by measuring a specimen with a known value and confirming the instrument reports that value within the repeatability of the instrument. If the expected value does not result, validation has failed, and some additional action must be taken to repair or adjust (calibrate) the instrument.

Executive summary

PAFI-MTP-002 is furnished for the purpose of public use.

A high aromatic ASTM D-910 fuel formulation is required for the screening tests.

This test plan reflects aviation industry best practice for materials test plans with format and content structured accordingly. Processes & procedures reflect industry practices for generating qualification data.

This test plan specifies the requirements for conducting comparative materials compatibility screening tests for a proposed alternative formulation for a fuel sufficient to be an alternative to ASTM D-910.

Successful completion of this test plan provides data supporting FAA Fleet Authorization(s).

The material in this document provides a reference for use in the preparation of test plans for the development of alternative aviation fuels. This document is derived from extensive FAA and industry experience and best practices for evaluating the suitability of aviation fuels for use in the piston powered general aviation fleet. This document is used by the FAA to compare and evaluate new aviation fuels relative to the performance of 100LL aviation gasoline that meets ASTM D910. This document is not intended to provide a method to obtain data to serve as a showing of compliance to regulatory requirements for the certification of aircraft or aircraft engines.

The material in this document does not change or permit deviations from existing regulatory requirements. This material is neither mandatory nor regulatory in nature. Use of this document or any derivative, in an attempt to obtain an FAA authorization of an alternative aviation fuel, should be pre-coordinated and approved by the appropriate FAA office(s) as part of an approved qualification program.

1 Introduction

This test plan specifies the requirements and procedures for conducting comparative compatibility testing of materials, required for participating in the FAA Piston Aviation Fuels Initiative (PAFI) test program.

This data will be used for the evaluation of an unleaded fuel being tested in the PAFI test program. The data will be used as part of the final evaluation of data for fleet authorization(s). Use of this test plan generates data meeting the applicable requirements of [FAA 14 CFR Parts 23 and 33] or ASTM D7826 for material compatibility.

2 Scope

Specific objectives of this plan are stated as follows. Specified materials lists are located in Appendices at the end of this document.

1) Execute compatibility screening of MIL-DTL-6000 Hose, Rubber, Aircraft, Fuel, Oil, Coolant, Water, And Alcohol, and MIL-DTL-5593 Hose, Aircraft, Low Pressure Air and Vacuum, Flexible, related to determining swell characteristics, and changes tensile/elongation properties following fuel exposure.

2) Execute compatibility screening of specified fuel bladder construction related to degradation and delamination of the internal lining following fuel exposure in compliance with applicable parts of FAA TSO-C80 and ASTM D7826.

3) Execute compatibility screening of specified integral fuel tank sealants related to changes to tensile/elongation, volume swell and peel strength properties following fuel exposure. Specified materials are provided in Appendix D.

    a. The list of integral fuel tank sealants includes a low strength access panel sealant and a liquid Buna-N topcoat which have material specific variations to the described required testing. Differences are provided.

4) Execute compatibility screening of specified nitrile, fluorosilicone, and fluorocarbon elastomers in the form of O-rings, related to changes in hardness, tensile/elongation, volume change and compression set following fuel exposure. These materials are in addition to the full materials list specified in ASTM D7826. Specified materials are provided in Appendix E.

5) Execute comparison testing of paint staining and adhesion impacts of a specified matrix of paint systems following fuel exposure. Specified materials are provided in Appendix F.

6) Execute comparison testing of fabric tensile/elongation of specified fabric systems following fuel exposure. Specified materials are provided in Appendix G.

7) Execute comparison testing of physical properties and long-term fill impacts of specified manufacturers of large distribution hoses. Specified materials are provided in Appendix H.

8) Execute comparison testing of specified resins, adhesives, foam cores, and fabrics used for composite structure construction. Specified materials are provided in Appendix I.

9) Execute comparison testing of filter elements, coalescer elements, and housings, and fuel tank coatings used in distribution systems. Specified materials are provided in Appendix J.

10) Execute comparison testing of vendor supplied materials used by original equipment manufacturers. Specified materials are provided in Appendix K.

11) Execute grease resistance to fuel exposure testing. Specified materials are provided in Appendix L.

The following test plan includes the requirements for confirming baseline properties, test set-up, instrumentation, and supporting documentation such as material and fuel certification documents as prerequisites to the testing identified. This test plan is used in conjunction with ASTM D7826 to prepare data packages for review of a fuel for fleet authorization(s).

Comparative testing of materials for screening purposes is executed at specified temperatures and durations which may be modifications from existing industry standards. The modifications have been selected by industry representatives as providing the desired screening data sufficient for consideration of a proposed unleaded fuel for acceptance into the FAA PAFI fuel testing program.

This PAFI Materials Test Plan consists of tasks executed in addition to ASTM D7826 materials compatibility testing to document physical changes in materials as compared to those changes experienced by a D910 compliant 100LL aviation gasoline produced with a high aromatic content. Although Specification D910 does not include an explicit maximum aromatic limit, other specification limits effectively restrict the aromatic content of aviation gasolines. For this testing, the high aromatic ASTM D910 compliant test fuel shall be fuel produced with 15% (-0%/+3%) toluene by volume per ASTM D3606. All other Table 1 properties shall be D910 compliant. In addition, the unleaded fuel shall be a “worst case” fuel for material compatibility testing. Worst case is defined as a fuel blended with the maximum amounts of reactive components permitted by the offered fuel’s standard. Reactive

components include, but are not limited to, aromatics, alcohols, ethers, amines, and other chemicals not traditionally used in aviation gasoline. Maximum amounts are defined by the maximum amounts permitted in the fuel by the respective fuel standard, be that an industry standard, company standard, or other controlling document . While this blend should be compliant to the target standard, it is recognized that the blending of the fuel to have this maximum content may not produce an "optimum fuel" for performance and operation. Data from both the unleaded test fuel and the high aromatic content 100LL aviation gasoline exposure will be further compared to the existing pass/fail criteria developed for material certification. In cases where the 100LL does not meet the pass/fail criteria provided, the resulting 100LL data will be used as a measure of minimum performance.

Requirements for confirming test equipment configuration, test instrumentation, and supporting documentation such as fuel certification are pre-requisites to the testing identified.

It is known under certain conditions, exposure to light can cause precipitation of the tetraethyl lead and fading of the dye in 100LL fuels. In order to avoid confounding of the test data, all fuel shall be stored in a manner which will minimize exposure to light, particularly sunlight. This includes bulk samples, such as 5-gallon specimens, laboratory specimens, and specimens during testing. Where possible, the fuel shall be stored in metal cans, brown borosilicate laboratory bottles, or containers wrapped in foil. Alternatively, fuel may be stored in clear laboratory glassware with the expectation it will be stored in low/no light locations such as a flammables cabinet or during oven testing.

2.1. Provisos

The following identifies significant assumptions, requirements, and provisions associated with the testing prescribed within this test plan. Testing performed pursuant to this test plan provides data supporting FAA fleet authorization(s) for PAFI unleaded fuels. Testing performed to this test plan must be witnessed by an identified designated representative of the FAA. This may be achieved through the use of a Designated Engineering Representative (DER), or another representative approved by the AIR-650 or PAFI Advisory Committee prior to executing testing.

All the results of the testing performed, and the associated data collected under the following test plan are considered competition sensitive and proprietary by the fuel offeror and are subject to NDA between the FAA and the Fuel Offeror.

3 Objectives

The objectives of this document are in addition to the materials compatibility testing of ASTM D7826. The specified materials for testing covered by this document are referenced in separate appendices at

the end of this document. The objectives of the PAFI Materials Test Plan comparative materials compatibility tests are defined as follows.

1) Demonstrate changes in tensile/elongation and changes in volume swell within specified limits or no greater than that experienced with 100LL when MIL-DTL-6000 nitrile hose is exposed to fuel at 21-27 °C)70 – 80 °F) for 48 and 24 hours respectively.

2) Demonstrate swelling within specified limits or no greater than that experienced with 100LL when MIL-DTL-6000 nitrile hose and MIL-DTL-5593 are exposed serially to fuel at room temperature and fresh fuel at 71 °C (160 °F) for 30 days at each temperature.

3) Demonstrate no cracking, blistering, delamination or other visual surface degradation of the internal surface of fuel bladder sheets following exposure to the fuel at 60 °C (140 °F) for 42 days (~1000 hours).

4) Demonstrate non-volatile gum residues from fuel exposed to a standard fuel bladder panel within specified limits when tested in compliance with the modified TSO-C80 simulated stand test.

5) Demonstrate swelling, changes in tensile/elongation, and changes in hardness of specified internal tank sealants prepared in compliance to SAE AS5127, Section 7.7 is within specified limits or no greater than 100LL when exposed to fuel at 60 +3/ -0 °C (140 +5/ -0 °F) for 42 days (~1000 hours). Testing will include fresh fuel exchange at day 14 and 28. The tensile/elongation and hardness changes shall be stabilized to within 10% of the day 14 value to assure an endpoint in fuel property changes. See Appendix D for materials.

6) Demonstrate changes in peel strength of specified internal tank sealants prepared in compliance with ASE AS5127, Section 8.0 are within specified limits or no greater than that experienced with 100LL when exposed to fuel at 60 +2/-0 °C (140 +5/-0 °F) after 42 days with fresh fuel changes at day 14, and 28. See Appendix D for materials.

7) Demonstrate changes in peel strength of specified internal tank sealants prepared in compliance with ASE AS5127, Section 8.0 are within specified limits or no greater than that experienced with 100LL when exposed to 100LL at 60 +2/-0 °C (140 +5/-0 °F) for 70 days followed by exposure to either 100LL (baseline) or test fuel for 70 days at 60 +2/-0 °C (140 +5/-0 °F)

8) Demonstrate changes in peel strength of PR-1005-L Buna-N slosh coating prepared in compliance with AMS-S-4383, 4.6.8 are within specified limits or no greater than that

experience with 100LL when exposed for 48 hours at 25 ° ± 1 °C (77 ° ± 2) following 72 hours of air cure and 24 hours at 49 °C (120 °F).

9) Demonstrate changes in extracted gum residues from Buna-N topcoat sealant is less than 20 mg/ 100 mL or no greater than that experienced with 100LL when exposed to fuel at room temperature for 48 hours.

10) Demonstrate swelling, and changes to tensile/elongation, hardness, and compression set within specified limits or no greater than that experienced with 100LL when specified nitrile, fluorosilicone and fluorocarbon (Viton™) O-rings are exposed to fuel at 71 ±3 °C (160 ±5 °F) for 42 days. Testing will include fresh fuel exchange at day 14 and 28. The tensile/elongation and hardness changes shall be stabilized to within 10% of the day 14 value to assure an endpoint in fuel property changes. See Appendix E for materials.

11) Demonstrate that a matrix of paint systems does not experience staining, change in hardness, or loss of adhesion greater than that experienced with 100LL when exposed to fuel at room temperature for 28 days with a fuel change and visual inspection at day 14. See Appendix F for materials.

12) Demonstrate that a matrix of paint systems does not experience staining or removal when exposed to fuel at room temperature as a drip to the surface under controlled conditions of rate and volume. See Appendix F for materials.

13) Demonstrate that a matrix of specified fabric systems does not experience a loss of tensile/elongation, adhesion, or cross-linking (blistering, bubbling, removal, etc.) greater than that experienced with 100LL when exposed to fuel at room temperature for 48 hours. Visual inspection and maintenance of a fuel reservoir will be done after 30 minutes, 1 hour, 4 hours, 8 hours, 24 hours, and 48 hours. Frequency of maintaining the fuel reservoir will be dictated by the volatility of the test fuel. See Appendix G for materials.

14) Demonstrate that changes in hardness, volume, and density of specified large distribution hoses is no greater than that experienced with 100LL when exposed to fuel at 71 °C (160 °F) for 28 days. See Appendix H for materials.

15) Demonstrate that changes in permeation, performance, and hydrostatic proof pressure of specified large distribution hoses are no greater than that experienced with 100LL when exposed to fuel at ambient conditions for 16 weeks. See Appendix H for materials.

16) Demonstrate that changes in weight gain, tensile/elongation, and break strength of specified composite matrices are no greater than those experienced with 100LL when exposed to fuel at ambient conditions for 28 days. See Appendix I for materials.

17) Demonstrate that changes in housing condition are no greater than those experienced with 100LL when exposed to fuel at ambient conditions for 500 hours. See Appendix J for materials.

18) Demonstrate that changes in filter cartridge dimensions and condition are no greater than those experienced with 100LL when exposed to fuel at ambient conditions for 500 hours. See Appendix J for materials.

19) Demonstrate that changes in filter coalescer condition are no greater than those experienced with 100LL when exposed to fuel at ambient conditions for 500 hours. See Appendix J for materials.

20) Demonstrate that changes in fuel water reaction, surface tension, and material migration are no greater than those experienced with 100LL when exposed to fuel at ambient conditions for 500 hours. See Appendix J for materials.

21) Demonstrate that changes in vendor supplied materials are no greater than those observed in 100LL baseline fuel. See Appendix K for materials.

22) Individual airframe manufacturers may select aircraft for further testing of fuel tank performance. This includes but is not limited to identifying aircraft with “wet wings” and performing testing as determined by the manufacturer. This testing will be for evaluating compatibility and functionality of the sealants following exposure to test fuels. Testing will be done at the manufacturers, or at their designated location with aircraft owned by or designated by the manufacturer.

23) Demonstrate that changes to the resistance of AMS-G-6032 to fuel is no greater than experienced with 100LL when exposed at ambient conditions for 8 hours, or after drying for 24 hours.

4 PAFI materials test plan

This test plan provides materials and test procedures which are in addition to those presented in ASTM D7826. ASTM D7826 is a guidance document which includes material compatibility testing on metallic and non-metallic materials and the testing to be performed. All of the materials compatibility testing in ASTM D7826 are to be completed. The following test plan includes materials or procedures

which are not currently included in ASTM D7826, or which are deviations from ASTM D7826. In cases where materials or tests are in both ASTM D7826 and this document, this document shall take precedence.

NOTE: ASTM D7826 includes HYSOL EA9628 structural metal bonding adhesive in the materials list. It does not, however, clearly indicate that the use of Solvay BR-127 epoxy primer is required for test panel construction. Furthermore, due to the difficulty in procuring the EA9628 adhesive, it is recommended the offeror work with the FAA and Piper to procure finished panels for the testing. This update is intended to be added to ASTM D7826 in a future revision, but at this time is not explained in D7826.

NOTE: ASTM D7826 does not currently include acetal resin (Delrin) or Tygon® F-4040-A tubing in the materials list. Testing of Delrin and Tygon® F-4040-A shall be added to the materials list of ASTMD7826. All non-metallic test protocols found in D7826 shall be performed on acetal resin and Tygon® tubing, and tested for changes in hardness, density, and volume. Materials shall be tested at room temperature and 71°C (Delrin) or 60 °C (Tygon). These materials are intended to be added to ASTM D7826 in a future revision.

The individual tasks encompassed in the PAFI Materials Test Plan are presented in the following sections of this document. Each test follows a common format with general procedures, processes, and test instrumentation common to each test. See referenced Appendices for specific materials lists.

1) MIL-DTL-6000/MIL-DTL-5593 Hose Test
2) Bladder (Fuel Cell) simulated stand test on sheets
3) Integral tank sealant (Polysulfide) Screening Tests
4) Additional Elastomeric Material (O-ring) Testing
5) Paint Staining and Adhesion Testing
6) Fabric Strength and Cross-Linking Testing
7) Large Distribution Fuel Hose Physical Properties and Performance Testing
8) Composite Resin and Fabric Screening Testing
9) Distribution System Filtration/ Coalescence Element Compatibility and Fuel Tank Coating Testing
10) Vendor Supplied Materials

The test plans may be executed by a third-party organization contracted by the fuel formulator in order to generate and collect the specified data. Integral fuel tank sealants test protocols are designed to be executed with participation of the product OEM's or other AS 9100 approved test facilities. All testing must be witnessed by a designated representative of the FAA. This data is considered acceptable for inclusion into the final FAA assessment for fleet authorization.

To be considered for fleet authorization, the test plans prepared to support the FAA PAFI Materials Test Plan for unleaded fuels are subjected to the following review and approval protocol.

1) The FAA test plans follow a format and content consistent with established practices.
2) Draft test plans are furnished to the FAA AIR600 office for review and approval. These test plans shall include, at a minimum, the location of testing, the specific materials and equipment to be used, and the plans for test witnessing by an FAA designated representative.
3) Upon concurrence from AIR600 Alternative Fuel Program Staff (AFPS),
4) A final test plan will be released incorporating changes resulting from AIR600 review.
5) All changes and referrals to this test plan should reference the latest revision level and date.

5 Applicable MIL, FAA, SAE & ASTM requirements

The following is a listing of the applicable FAA, SAE, and ASTM documents which contain information relevant to the testing specified by this test plan. The latest revision number should be used unless otherwise indicated. The revision number used for testing shall be recorded.

5.1. Military handbooks & standards

Military reference material and standards applicable to the testing identified are listed as follows.

1) MIL-HDBK-510-1D "Department of Defense Handbook, Aerospace Fuels Certification"
2) MIL-DTL-5593 "Hose, Aircraft, Low Pressure Air and Vacuum, Flexible"
3) MIL-DTL-6000 "Hose, Rubber, Aircraft, Fuel, Oil, Coolant, Water, And Alcohol"
4) MIL-PRF-6855 "Rubber, Synthetic, Sheets, Strips, Molded or Extruded Shapes, General Specification For"
5) MIL-DTL-25988 "Rubber, Fluorosilicone Elastomer, Oil– And Fuel–Resistant, Sheets, Strips, Molded Parts, And Extruded Shapes" (Supersedes SAE-AMS-R-25988)

6) CCC-C-432 “Cloth, Sheeting, Cotton, (Unbleached, Bleached, and Dyed) (Supersedes Fed. Spec. CCC-C-432) Inactivated 11 April 2002

5.2. FAA advisory circulars & orders

1) FAA Advisory Circular 33.19-1,” Guidance Material for 14 CFR §33.19 Durability for Reciprocating Engine Redesigned Parts”
2) FAA Advisory Circular AC33.4-1,” Instructions for Continued Airworthiness”
3) FAA Order 8110.4C, “Type Certification Process”

FAA guidance and reference material applicable to Part 33 reciprocating engines are listed as follows.

1) FAA Advisory Circular 33.19-1,” Guidance Material for 14 CFR §33.19 Durability for Reciprocating Engine Redesigned Parts”
2) FAA Advisory Circular AC33.4-1,” Instructions for Continued Airworthiness”
3) FAA Order 8110.4C, “Type Certification Process”
4) FAA Technical Order C80, “Subject: TSO-C80, Flexible and Oil Cell Material”

5.3. Federal test methods

1) Federal Test Method Standard No. 601, April 12, 1955, “Rubber: Sampling and Testing”, Method 4111, “Tensile Strength.”
2) Federal Standard 791, November 6, 2007, “Testing Method of Lubricants, Liquid Fuels, and Related Products”, Method 5414.4, “Resistance of Grease to Fuel.”

5.4. SAE standards

SAE standards applicable to the testing identified are listed as follows.

1) SAE AS5127 “Aerospace Standard Test Methods for Aerospace Sealants Two-Component Synthetic Rubber Compounds”
2) SAE AMS3276 “Sealing Compound, Integral Fuel Tanks and General Purpose, Intermittent Use to 360 °F (182 °C)”
3) SAE AMS3277 “Sealing Compound, Polythioether Rubber Fast Curing for Integral Fuel Tanks & General Purpose, Intermittent Use to 360°F (182°C)”

4) SAE AMS3281 “Sealing Compound, Polysulfide (T) Synthetic Rubber for Integral Fuel Tank and Fuel Cell Cavities Low Density for Intermittent Use to 360 °F (182 °C)”

5) SAE AMS3284 “Sealing Compound, Low Adhesion, for Removable Panels and Fuel Tank Inspection Plates”

6) SAE AMS-S-4383 “Sealing Compound, Topcoat, Fuel Tank, Buna-N Type”

7) SAE AMS-P-5315 “Acrylonitrile-butadiene (NBR) Rubber For Fuel-Resistant Seals 60 to 70”

8) SAE AMS-7276 “Rubber: Fluorocarbon (FKM) High-Temperature-Fluid Resistant Low Compression Set For Seals In Fuel Systems and Specific Engine Oil Systems”

9) SAE AMS7379 “Rubber: Fluorocarbon Elastomer (FKM) Low Temperature Sealing Tg -40 °F (-40 °C) 70 to 80 Type ‘A’ Hardness For Elastomeric Seals in Aircraft Engine Oil, Fuel and Hydraulics Systems”

10) SAE AMS7287 “Fluorocarbon Elastomer (FKM) High Temperature / HTS Oil Resistant / Fuel Resistant Low Compression Set / 70 to 80 Hardness, Low Temperature Tg -22 °F (-30 °C) For Seals in Oil / Fuel / Specific Hydraulic Systems” – Replaces SAE AMS-R-83485, Type 1

11) SAE AMS-S-8802 “Sealing Compound, Fuel Resistant, Integral Fuel Tanks and Fuel Cell Cavities”

12) SAE-AMS-R-25988, “Rubber, Fluorosilicone Elastomer, Oil-and-Fuel-Resistant, Sheets, Strips, Molded Parts, and Extruded Shapes” – Cancelled, Superseded by MIL-DTL-25988

13) SAE-AMS-R-83485 “Rubber, Fluorocarbon Elastomer, Improved Performance at Low Temperatures”–Cancelled, Type 1 replaced by AMS7287

14) AMS-QQ-A-250/5B “Aluminum Alloy Alclad 2024, Plate and Sheet”

15) SAE J905 SEP2009 Fuel Filter Test Methods

5.5. ASTM guidance & practices

ASTM guidance and standards applicable to the testing identified are listed as follows. Data provided by this test plan will support development of an ASTM production specification for each of the unleaded fuels. Within this document, references to content may be revision specific, for example section references, however use of the most current version of the standards are permissible. STM is “Standard Test Method”

1) ASTM D380 “STMs for Rubber Hose”
2) ASTM D381 “STM for Gum Content in Fuels by Jet Evaporation”
3) ASTM D395 “STMs for Rubber Property—Compression Set”
4) ASTM D412 “STMs for Vulcanized Rubber and Thermoplastic Elastomers—Tension”
5) ASTM D413 “STMs for Rubber Property – Adhesion to Flexible Substrate”
6) ASTM D471 “STM for Rubber Property—Effect of Liquids”
7) ASTM D1094 “STM for Water Reaction of Test Fuels”
8) ASTM D1331 “STM for Surface and Interfacial Tension of Solutions of Paints, Solvents, Solutions of Surface-Active Agents, and Related Materials”
9) ASTM D1414 “STMs for Rubber O-Rings”
10) ASTM D2240 “STM for Rubber Property—Durometer Hardness”
11) ASTM D2276 “STM for Particulate Contaminant in Aviation Fuel by Line Sampling”
12) ASTM D2344 “STM for Short-Beam Strength of Polymer Matrix Composite Materials and Their Laminates”
13) ASTM D2583 “STM for Indentation Hardness of Rigid Plastics by Means of a Barcol Impressor”
14) ASTM D3039 “STM for Tensile Properties of Polymer Matrix Composite Materials
15) ASTM D3163 “STM for Determining Strength of Adhesively Bonded Rigid Plastic Lap-Shear Joints in Shear by Tension Loading”
16) ASTM D3359 “STM for Measuring Adhesion by Tape Test”
17) ASTM D3363 “STM for Film Hardness by Pencil Test”
18) ASTM D3505 “STM for Density or Relative Density of Pure Liquid Chemicals”
19) ASTM D5035 “STM for Breaking Force and Elongation of Textile Fabrics (Strip Method)”
20) ASTM D5379 “STM for Shear Properties of Composite Materials by the V-Notched Beam Method”

21) ASTM D7826 “Standard Guide for Evaluation of New Aviation Gasolines and New Aviation Gasoline Additives”

6 Description of test articles

This test plan covers the screening materials compatibility of multiple test articles. Multiple test articles may be required within each individual task. Details in this section are in addition to or in lieu of materials described in ASTM D7826.

6.1. MIL-DTL-6000 hose – aircraft hose

In order to complete the hose testing, two sizes of MIL-DTL-6000 compliant hoses are required.

1) 3/8” or -6 hose in 12-to-15-inch sections; a total of a minimum of 10 continuous feet. In order to perform the necessary fuel gum testing, four 12-to-15-inch specimens per tested fuel are required. A total of eight specimens is required per fuel set (four for experimental fuel and four for 100LL aviation gasoline). This hose is used to prepare the diameter swell testing.

2) 2” (-32) hose minimum up to 2 ½” (-40); a total of 9 feet. This size hose is used for tensile/elongation and volume change testing and will be used to prepare ASTM D412, Die C tensile strips and 1”x2” volume change specimens. The hose must be a minimum diameter of 2” to provide sufficient length for Die C tensile strips. Due to manufacturing schedules, availability of large diameter hose may require the purchase of larger diameter MIL-DTL-6000 hose up to 2 ½”. This is permissible as long as the hose is not reinforced, i.e., with metal braid.

3) Hose ends and AN fittings used to cap and seal the hose specimens. These fittings shall be installed into the -6 hose using industry standard assembly processes.

6.2. MIL-DTL-5593 hose – aircraft hose

In order to complete the hose testing, length(s) of hose must be procured from Piper (P/N 187-058 Bulk Hose). The military specification is insufficient in specifying the material and construction of the hose specific to use by Piper.

1) 3/8” or -6 hose in 12-to-15-inch sections; a total of a minimum of 10 continuous feet. In order to perform the necessary fuel gum testing, four 12 to 15” specimens per tested fuel are required. A minimum of eight specimens is required per fuel set (four for the experimental fuel and four for the 100LL aviation gasoline). This hose is used to prepare the diameter swell testing.

2) Hose ends and AN fittings used to cap and seal the hose specimens. These fittings shall be installed into the -6 hose using industry standard assembly processes.

6.3. Fuel bladders AKA fuel cells

In order to complete the Simulated Stand testing, samples from multiple manufacturers are required. The samples are prepared from fully constructed bladder including an airworthy patch and a seam in the form of panels. The sheets may be cut from finished, purchased fuel cells.

The fully constructed panel for the simulated stand test can be achieved by cutting the panels from fuel cells manufactured under either FAA-PMA or an original equipment product and supplied with an FAA Form 8130-3. The specimens shall be cut from the fuel bladder in a manner to include a flat area across which there is a seam. The airworthy patch may be prepared prior to cutting the specimens or after the specimens have been prepared. Patching shall be in accordance with applicable ICA's (Instructions for Continued Airworthiness).

Specimens to be used for the simulated stand test will be cut from an open area to produce a set of panels of sufficient size to fit the chosen exposure test rig (See Section 10.9). Panel shall be flat without corners or mounting hardware.

Fuel cell part numbers which have been identified as acceptable include:

1) 2F1-6-32514-17

2) 2F1-6-37819-18

6.4. Polysulfide sealants and Buna-N topcoat testing

The integral tank sealants must be prepared as cured flow sheets as described in AS5127, Section 7.7 Tensile Strength and Elongation, see Appendix D for sealant descriptions. The sealants, except for AMS 3284 Low Adhesion Sealing Compound, and AMS-S-4383 Buna-N Topcoat must also be prepared for peel testing as described in AS5127, Section 8. Additionally, AMS 3281 sealant is also to be tested applied to BT250/eglass fiber reinforced composite panels.

One way tank sealants are procured is in a Semkit® package which is a complete, multi-component plastic cartridge assembly which stores, mixes, and applies multiple component sealants. Sufficient Semkits® must be procured to produce flow sheets sufficient to prepare the ASTM D412 Die C tensile strips and the ASTM D471 dimension change specimens, and to prepare the peel strength specimens. The number of Semkits® required is determined by the size of the flow sheets, the number of specimens required, and the number of peel strength specimens.

Sealants shall be specified as being produced from the same lot of sealants. If multiple lots of material must be used, all specimens within a type, for example the flow sheets, shall be from the same lot. The goal is to assure that the specimens exposed to the baseline 100LL fuel are from the same lot as those exposed to the test fuel.

This test protocol requires the procurement of integral tank sealants and one type of Buna-N topcoat (Slosh Coat). Example source and part numbers are provided in Appendix D. For exact source/part numbers see PAFI Materials Test Matrix. Each material tested must be from the same lot and Certificates of Conformance should be included in the test report. In addition to the full material compatibility testing on the materials listed in Appendix D, Table 1, validation testing must be performed on specified sealants by the listed manufacturers and part numbers in Appendix D, Table 2.

6.5. Additional materials; nitrile, fluorosilicone, and fluorocarbon O-rings

In order to provide initial screening information related to elastomeric compatibility, materials in the form of O-rings are to be tested. This testing is in addition to the materials compatibility provided in ASTM D7826 and is useful for pre-screening. This testing also provides data related to actual form and function.

In order to facilitate the tests, each O-ring may be procured in two sizes. For example, each O-ring may be procured as a -210 (1" OD) for use in compression set testing and as a -226 (2 ¼" OD) for use in tensile/elongation and hardness testing. O-rings in these two sizes provide for acceptable repeatability from the specified test methods. Certificates of Quality, Certificates of Conformance or other documentations containing Lot information are to be requested and provided in final report. Materials specified are provided in Appendix E.

6.6. Paint test

In order to provide information on the propensity of a fuel to cause staining or loss of adhesion, a matrix of paint systems prepared to airworthy standards are required. For proper application and adhesion, paints are described as systems, which may include any or all of the following: a surface treatment, a primer, a base coat, and a clear coat. In a system, the different materials are not automatically interchangeable. Using unmatched components often invalidates the manufacturer's warrantees or guarantees. To assure proper application of the systems, a professional facility capable of applying paint is recommended.

The paint systems as specified by the test plan are shown in Appendix F. Note that for the paint systems provided, the paint manufacturer listed is part of the requirements of the Material Test Plan. Each paint system is to be applied to 0.040" 2024-T3 aluminum per AMS-QQ-A-250/5B. The aluminum shall be sheared into 5.08 cm x 10.16 cm (2" x 4" squares) prior to painting to avoid edge effects and damage to the paint by the shearing process.

In addition to the aircraft paint systems, compatibility of the coatings used on distribution fuel tanks must be considered. The coating systems are applied and tested in the same manner as aircraft paint systems. The distribution coating systems are provided in Appendix J.

6.7. Fabric test

In order to provide information on the propensity of a fuel to cause loss of crosslinking, a loss of adhesion, or a loss of tensile strength, a matrix of fabric systems prepared to airworthy standards is required. For proper application and adhesion, fabrics are described as systems, which may include any or all of the following: the fabric, a surface treatment, a cement, and a coating. In a system, the different materials are not automatically interchangeable. Using unmatched components often invalidates the manufacturer's warrantees or guarantees. To assure testing of the fabric system specifically, the test articles do not include a final paint layer. This provides testing of the fabric system itself and is indicative of unpainted regions, such as interior surfaces.

The fabric systems as specified by the test plan are shown in Appendix G. Note that for the fabric systems provided, the manufacturer listed is part of the requirements of the Material Test Plan. Each fabric system is to be prepared by construction on an industry standard wooden test frame described below and shall include a seam both attached and unattached to a support structure. The system shall be prepared to airworthy standards. None of the systems include any form of final paint which would confound the collection of structural data.

6.8. Distribution hoses

In order to provide initial screening information related to elastomeric compatibility of airport distribution hose, materials in the form of large diameter distribution hose are required. Hose testing is designed to provide information on the propensity of a fuel to cause changes in physical response of the material to the fuel which is significantly different that that experienced when exposed to conventional ASTM D910 100LL aviation gasoline.

The hoses are procured as a 1 ½" minimum diameter hose. Either a regular or a defueling/Jac Riser hose may be used. The primary difference is the use of steel wire helix on the defueling hose; thus, a

regular hose is preferred for the preparation of specimens. The hoses specified are provided in Appendix H.

6.9. Composite resins, adhesives, and fabric

In order to provide information related to the material compatibility of the resin systems used in general aviation aircraft, common resins, prepregs, adhesives, structural foam core, and fabrics are required. The list of materials is provided in Appendix I.

Composite testing is designed to provide information on the general compatibility of the composite systems but not specific material systems. The results can provide information on the propensity of a fuel to cause changes in structural properties which are significantly different than when exposed to conventional ASTM D910 100LL aviation gasoline.

6.10. Distribution filters and water separators

In order to provide information related to the compatibility of distribution system fuel filters and water separators, housings and cartridges representative of those in use are required. Filter/separator testing is designed to provide information on the propensity of the fuel to cause issues in the compatibility of the hardware; both the housings and the consumable cartridges, but not to assess the functionality of the hardware with the fuel. Any assessment of the ability of the hardware to provide adequate functionality is beyond the scope of this effort.

The hardware is procured in the form of systems; a single element housing and the concomitant filter/separator cartridge. At the time of this writing, water monitors comprised of super absorbing polymers have been removed from the market and are in the process of being replaced throughout the industry. Thus, water monitors are not specified in this document. Systems specified are shown in Appendix J.

6.11. Vendor supplied materials

In order to provide information related to the compatibility of individual materials specific to, and potentially proprietary to individual original equipment manufacturers (OEMs), testing of vendor supplied materials is desired. The parts include both sheet material and finished parts.

The vendor supplied materials are identified by and procured from the OEMs. Materials are listed in Appendix K.

6.12. Wing fuel tanks

In order to provide information related to the compatibility of wing tanks, particularly “wet wings”, representative of the tank sealants in use by airframe manufacturers, testing of assembled wings is desired. Wing tank testing is at the discretion of and under the purview of individual airframe manufacturers.

The hardware is identified by and procured by the airframe manufacturers. No attempt to identify specific hardware is made within this guide.

6.13. AMS-G-6032 gasoline and oil resistance grease

In order to provide information related to the compatibility of assembly grease(s) such as AMS-G-6032, a representative grease resistance is desired. A list of representative compliant grease(s) is provided in Appendix L.

7 Conformity

7.1. Test fuels

A plan for verifying fuel conformity, including independent sampling and analysis of fuel used during testing, must be approved by the AFPO prior to execution of testing under this Test Plan.

7.2. Samples

Each sample material shall be shown to conform to its respective specification or qualification as documented by a certificate of quality, certificate of conformance, FAA form 8130, or other provided documentation. Samples comprised of multiple pieces, sheets, or other units shall be purchased from single lots. Where practical, samples shall be purchased in single units, i.e., a single length of hose, for preparation into specimens. Lot information, certificates of quality, certificates of conformances, or other identifying documentation shall be included in the test results reports.

7.3. Specimens

Specimens shall be prepared from single lots of materials. Where it is not possible to procure sample materials from single lots, specimens prepared from each lot shall be distributed uniformly across sample sets. For example, the O-rings are supplied in two lots. O-rings from both lots shall be combined to prepare a sample set for each fluid to be tested. Do not use one lot for one fuel and one lot for the other fuel.

For specimens prepared from larger sample materials, each individual specimen shall be inspected for quality, suitability, and where specified by standard, compliance to the standard requirements. Considerations include but are not limited to specimen orientation uniformity, cut quality, minimization or elimination of voids, inclusions, or other discontinuities, and successful preparation to industry quality standards. Where material limitations or sample condition require the use of lesser quality specimens, distribution of the specimens shall be uniform across the sample sets.

8 Safety procedures

This document does not purport to address all safety considerations. This document does not replace or supersede individual instrument documentation, Federal, State and local regulations, site procedures, or general industry practices. Appropriate safety precautions are the responsibility of the Test Facility conducting the test. The Test Facility shall establish and ensure compliance with the applicable safety and health standards. Prior to initiation of test, each test set-up shall be inspected for safe practices. Consideration for personal protective gear (PPE) is the responsibility of the Test Facility.

8.1. Sample fill (reference ASTM D4057, Section 5.2)

A safe fill of jars, cans, and closed beakers between 70 and 85 vol. % is recommended unless otherwise instructed. Do not fill over 85% of the container volume unless specifically instructed to do so. Containers, including glass, which are used for testing at elevated temperatures, are recommended to be filled at least 70% to prevent excessive fluid volatilization.

8.2. Static charge (reference ASTM D4057)

8.2.1. Grounding (D4057-12, Section 5.4.1)

Fires and explosions have occurred as a result of hydrocarbon vapors being ignited by static electricity. If electrical charges are not grounded, they are unable to dissipate and become “static.” This static electric charge can accumulate and freely migrate to a single point on the sample container by a difference in electrical potential, then jump off as a high-energy spark discharge to a nearby less charged surface. The spark may be hot and prolonged enough to ignite nearby hydrocarbon vapors present above the lower explosive limit (LEL). This potential shall be managed by safely dissipating static charges, and through proper grounding, when handling flammable products.

8.2.2. Personal attire (D4057, Section 4.5.2)

Footwear or clothing, capable of causing sparks, should not be worn during fuel handling activities in which flammable vapors are likely to be present. Sampling should not be carried out during periods of atmospheric electric disturbance or hailstorms. To ground any static charge on their body, the individual performing the handling should touch a grounded structure prior to handling fuel.

8.3. Vapor Hazards

All testing must be done in compliance with Federal, State, local and site fire safety protocols as well as applicable NFPA codes and regulations. The following are considerations for safe handling of flammable test fluids but do not replace or supersede local fire protection protocols and regulations.

1) While quart canning jars and foil have been successfully used for turbine fuel and aviation gasoline testing, fuel formulas with significant volatility differences in components may experience unacceptable separation due to more volatile components preferentially volatilizing and escaping from the canning jars. This results in not only a potentially flammable outgassing but also potential concentration of the remaining components. Alternative containers with more positive sealing and vented safety containment structures are recommended.

2) The presence of volatile vapors in an environment with an elevated temperature can create a flammable condition. Remote heating sources, removal of ignition sources, and proper grounding shall be used when exposing sample sets to elevated temperatures.

8.4. Personal protective equipment

This document does not replace or supersede any Federal, State, local or site-specific requirements related to personal protective equipment. Technicians and test engineers are advised to familiarize themselves with the safety data sheets (SDS) for all of the fluids under test. Recognize that exposure at elevated temperatures may result in the concentration of blend components and applicable PPE should be considered. Individuals are recommended to use at a minimum safety glasses or goggles, petroleum resistant gloves, and lab coats or aprons. **NOTE: Fire rated lab coats may NOT also be chemical resistant.** Closed toed, non-charge isolating footwear is also recommended.

8.5. Hydrostatic testing equipment

This document does not replace or supersede any site-specific requirements related to the necessary containment apparatus sufficient for the pressurization of large diameter distribution hoses to a proof pressure of 600 psi. Technicians and test engineers are advised to familiarize themselves with the

dangers of rubber hoses under pressure, as well as the support equipment to apply and hold the proof pressure. The most common risk is from "sudden energy release". This is generally caused by either a failure of the part under test, or of a failure in the connections between the pressure source and the part under test. At minimum, a check list for pre-test inspections, and separation of the personnel from the article under test is recommended.

9 Pre-test requirements

9.1. Specimen identification

All of the individual specimens in a sample set must be permanently marked with a unique individual identification such that pre and post exposure data can be positively connected. Means of marking must not introduce potential confounding data such as degradation. Individual specimens are recommended to be marked at edges outside of areas of interest, for example the grip region of a Die C tensile strip. Means of marking specimens that have proven successful include silver ink pens and silver paint pens (black specimens) and permanent markers (i.e., Sharpies™) or standard ink pens (light colored specimens). Specimens not conducive to full ID marking have been successfully identified using a symbol marking corresponding to a specimen ID, for example one, two, and three, etc. dots along an O-ring surface.

Bladder sheets shall be marked to indicate the inner and outer surfaces in additional to a specimen identification marking.

9.2. Pre-exposure baseline data

Each individual task has specific pre-exposure data to be collected. This includes:

1) Hardness (**NOTE: The use of "Shore" is historical but common**.)
    a. Shore A per ASTM D2240, Type A for flat stock
    b. Shore M per ASTM D2240, Type M, Type 3 for O-rings
    c. "H" hardness per ASTM D3363 for paint
    d. Barcol per ASTM D2583 for composites
2) Tensile/elongation
    a. ASTM D412, §12, Die C for flat stock

b. ASTM D3039, finished composites

c. ASTM D1414, §8, O-rings

d. ASTM D5035, fabric strips

3) Dimension

a. ASTM D471, §13, thickness and length

b. ASTM D3767, §9.1 Procedure A, micrometer on O-rings

4) Outer and Inner Diameter for hoses

a. Calipers, micrometers

b. Calibrated inspection balls (option)

5) Weight (mass)

a. ASTM D471, §12.1, air and water weights

6) Density of solids

a. ASTM D792 (option)

7) Non-volatile Gum Content on neat fuel

a. ASTM D381

8) Density on neat fuel

a. ASTM D3505

9) Internal Tank Sealant Peel Strength

a. SAE AS5127, Section 8

10) Paint Adhesion

a. ASTM D3359

11) Shear Properties of Composite Materials

a. V-Notched Beam, ASTM D5379

b. Short-Beam Strength, ASTM D2344

c. Adhesively Bonded Lap-Shear Joints, ASTM D3163

12) Fuel Water Reaction, ASTM D1094

13) Fuel Surface Tension, ASTM D1331

14) Material migration, ASTM D2276

15) Grease percent solubility, Fed-Std-791, Method 5414.4

9.3. Pre-exposure photographs

Each sample shall have a representative pre-exposure photograph taken. It is recommended that the set up for photographs include a repeatable backdrop/surface (white or blue), repeatable lighting, and the ability to repeat camera location. It is recommended that a printed identification label be included in the photo that includes sample, that it is pre-exposure, and if appropriate, individual specimen identification. In addition to a general photographic requirement, specific photographs are also required related to the specimens for a given task.

For Task 1 hoses, all the individual hoses, including the open ends and then the capped ends shall be photographed.

For Task 2 bladders, all the individual bladder sheets both the interior and external surfaces shall be photographed. Photos taken directly on (perpendicular to the surface) and at an oblique angle are recommended.

Photos of the finished bladders shall include the manufacturer identification stamps displaying bladder type (BTC-99 or BTC-101).

For Task 3, sealants, in addition to representative specimen photographs, representative photographs of the peel strength panels shall be taken.

Task 4 O-rings, all individual O-rings shall be photographed.

For Task 5 paint, each individual specimen shall be photographed after being cut with an “X” for the adhesion testing. Because of the requirement for evaluating discoloration/staining, the use of a lightbox or similar structure is recommended to assure repeatable lighting of the specimen.

Photograph tank coating panels as received and after cutting “X” for adhesion testing.

For Task 6, fabric, each individual frame shall be photographed as an overall, as well as focused photos of the seam regions, and the open area on both sides of the center seam. Photographs shall be taken at each step of the construction of the fabric system (laying the fabric, cementing the seam, stretching fabric, etc.)

For Task 7, Distribution Hose, each individual cut hose specimen shall be photographed. Representative photos of both ends with fittings, and open hose areas prior to dusting with talc shall be taken.

For Task 8, Composite testing, representative photos of individual specimen type and construction.

For Task 9, Filter and Coalescer testing, representative photos of each individual housing: seals, interior, exterior; each individual filter cartridge: end caps, adhesive joints, filter pleats; and each individual filter coalescer; end caps, exterior. These photos will be used for comparative inspection and must be sufficient for inspecting the condition of major components post exposure.

9.4. Laboratory notebook

Either a bound notebook or digital notebook shall be maintained for any exposure testing. Technicians shall record each individual specimen's unique identification, any lot or certification information, and all corresponding pre-exposure data. Each test and test method, as well as any equipment identification shall be recorded. The test results report shall document the manufacturer and model of any analytical equipment used. Information related to the instrument calibration or validation shall be recorded.

This notebook shall also be used to record any start times and dates, test conditions such as temperature, times and dates of any fuel exchanges, visual observations, and the time and date of test terminations.

Anomalies, issues, troubleshooting, unplanned events, and any other observations shall be recorded in the notebook. Final test data shall be recorded and positively connected to the appropriate pre-exposure data.

10Test facility & equipment

10.1. Temperature controlled areas

The tests in this document require temperature-controlled environments capable of maintaining temperatures up to ±3 °C or as specified. The temperature measurement precision shall be ±1 °C/F where specified.

10.1.1. Elevated temperature-controlled areas – ovens

Any ovens used for heating samples shall not have exposed heating elements or ignition sources. Considerations shall include ventilation of hazardous or flammable vapors. Temperature recorders are not required but a means of monitoring actual temperatures through a test is required.

Local fire safety regulations may limit the total volume of flammable liquids that may be stored in a space, especially at elevated temperatures or in personnel occupied spaces. Task 2 requires approximately five gallons total volume of fuel to be heated.

10.2. Access controlled area

10.2.1. Access control

In order to assure control of the samples throughout the testing, access control either through limited access rooms, equipment locks, or other positive control means is recommended.

10.2.2. Controlled access space

Fabric testing and large hose exposure will be conducted in an enclosed, weather-tight, space such as a hanger, warehouse, or similar controlled space. The space will have ambient temperatures of 20 ±5 °C. Space must be acceptable for the presence of fuel vapors. There must be sufficient space to permit accessing exposure cans (sample reservoirs) for the fabric exposure.

10.3. Tensiometer with extensometers

The tensiometer shall include extensometers capable of collecting elongation data and grips appropriate to the test specimen. Flat stock in Die C tensile strips requires clamps with sufficient clamping force and sufficient surface area to prevent slippage without crushing the grip region. In order to test uncut O-rings, the use of ball-bearing spool grips is recommended. Extensometers that clip on to the specimen with a fixed gap are recommended for measuring elongation.

Short beam test fixture for composite testing.

Shear test fixture for v-Notch composite testing.

10.4. Calibrated / validated laboratory measuring equipment

Testing and measuring require standard laboratory equipment which has been calibrated or validated as appropriate. This list of equipment does not exclude others. Any equipment which has calibration shall have the date of the latest calibration recorded. For instruments using validation measurements, the results of the validation shall be recorded and the means of rectifying any non-compliant equipment documented.

Table 1 – Calibration and Validation References

Instrument	**Report**	**Reference**
Shore A durometer	Validation	ASTM D2240
Shore M durometer	Validation	ASTM D2240
Barcol Indentor	Validation	ASTM D2583
Analytical balance, capacity 0.001g	Calibration	-
Calipers	Validate	-
Micrometers	Validate	-
ID dimension measurement device	Certificate of Conformance	-
ASTM Die C tensile	Calibration	ASTM D-412
ASTM 1” x 2” die	Calibration	-

10.5. Sample jars

For fuel samples requiring one liter or less of fuel for specimen exposure, a container comprised of heavy weight, borosilicate or Pyrex glass (heat resistant) with a heat resistant lid, for example Green Thermoset, with foil or PTFE (Teflon™) liner is recommended. Alternatively, stainless steel pressure vessels may be used as long as the vessels are thoroughly cleaned following ASTM or similar protocols (see ASTM D4306). Actual selection of sample jars is at the discretion of the location performing the test.

Some exposure tests will require larger containers to accept larger test fixtures, for example the compression set block. Selection of a larger container should take into account the size of the testing fixture, sufficient volume of fuel to adequately expose the test specimens, and the volume of fuel to be heated. Reusable vessels must be thoroughly cleaned following ASTM or similar protocols (see ASTM D4306).

10.6. Hose stand rig

A rig of sufficient space to permit vertical hanging of 12-to-15-inch hose lengths is required for Task 1. This rig should also provide spill containment sufficient for the fuel inside the hose specimens should a hose fail.

10.7. ASTM D381 air jet evaporator

Task 1, Task 2, and Task 3 require the measurement of the existent gum content of the fuel samples. The testing is to be done in compliance with ASTM D381, §8 in revision -16, Air Jet method. Aviation gasoline may not be tested using the Steam Evaporation method.

10.8. Muffle furnace

Task 2 and Task 3 require the determination of stoved gum residue. In order to execute this analysis, the specimens must be heated to 300 ± 5 °C (572 ± 9 °F). One means of achieving this is the use of a muffle furnace.

10.9. Bladder (fuel cell) exposure rigs

10.9.1. Simulated stand rig

Task 2 requires a rig capable of sealing a bladder panel of 12” x 12” or similar size over a reservoir of test fuel. The reservoir shall be comprised of non-reactive material such as stainless steel or polytetrafluoroethylene (Teflon™). A means of clamping the test panel over the reservoir in a manner that prevents leakage is also required.

10.10. Flow sheet manufacture

A 0.125 inch ± 0.015 inch (3.18 mm ± 0.4 mm) thick sheet of sealing compound shall be prepared by pressing freshly mixed sealing compound between two release sheets or plates (e.g., low density polyethylene, Teflon, release paper, or metal panels), by injecting into a closed mold, or by an alternate method as specified in the applicable material specification. Critical to any method is avoiding air entrapment or voids which later compromise specimen integrity. The sealing compound shall be cured at standard conditions in accordance with AS5127 (4), for the time defined in the applicable material specification. The use of a facility familiar with the preparation of polysulfide sealant sheets and AS 9100 approved is required.

Furthermore, because of the sensitivity of the AMS-3277 Type 2, Class B-2 polythioether sealant to correct mixing for proper cure, it is recommended the sealant manufacturer, PPG, be contracted to prepare the required flow sheets from the PPG PR2001. Assistance in access to PPG may be requested from the FAA AIR 650 office.

10.11. ASTM D395 compression blocks

Compression blocks and shims in compliance with ASTM D1414's callout for ASTM D395.

10.12. Industry standard fabric test frames

Task 6 requires test frames onto which the subject fabric system is built. The frame is based on standard industry fabric test frames and can be constructed from higher quality commercial lumber. It is important that all edges and surfaces be smooth, and free from rough edges, joints, or protrusions. Figure 1 shows a mechanical drawing of the frame. The frames will be under pressure from the tightened fabric and as such must be constructed in such a way and from such materials to withstand the forces applied. The cross member is a part of the test articles and will be removed during testing. It will be necessary to cut the cross member, while remaining attached to the fabric, without damaging the fabric. Soft pine or balsa is recommended for the construction of the cross member. The flat surface over which the fabric is stretched must be smooth, without sharp edges. This requires a finishing technique be used at the joints (see Figure 2).

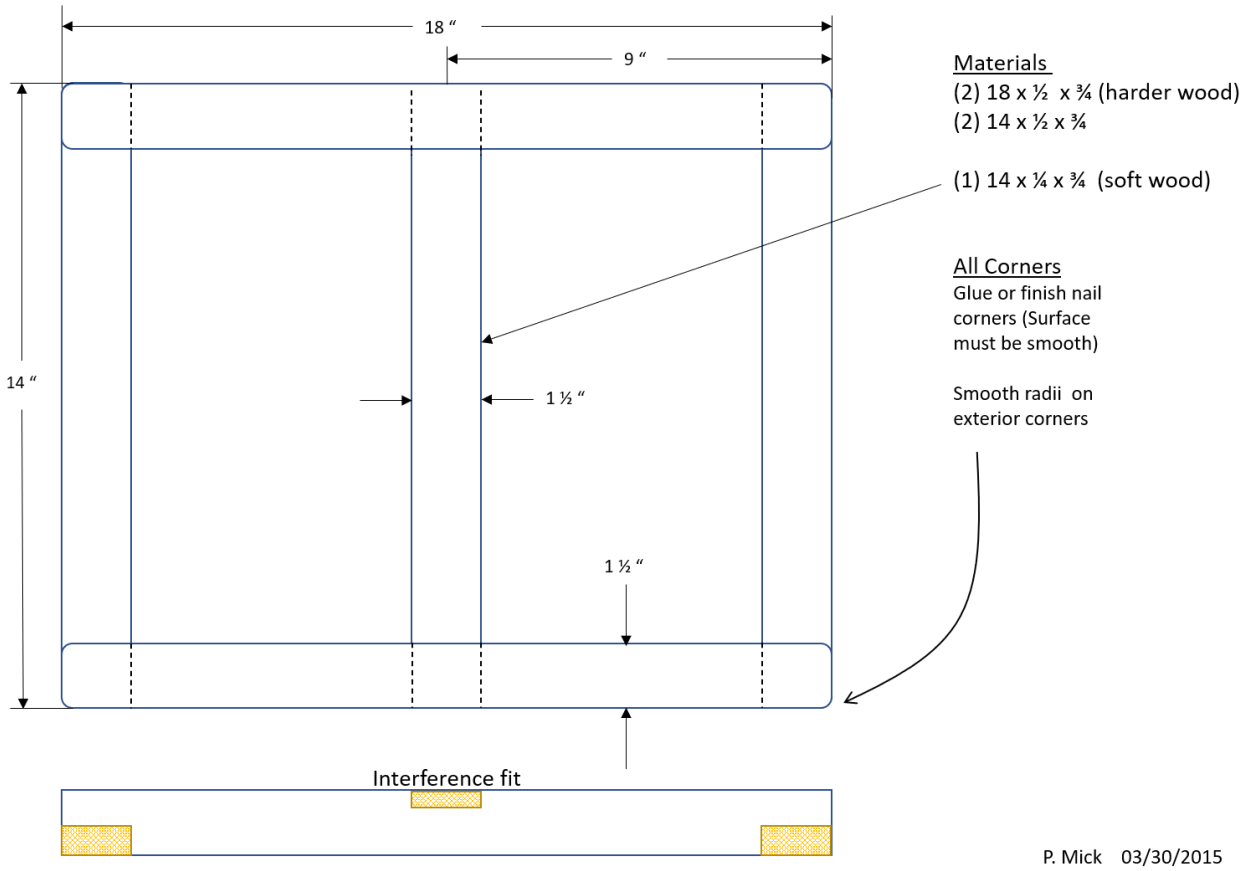

Figure 1 - Fabric Frame Construction Drawing

Figure 2 - Finished Fabric Frame

10.13. Hydrostatic testing equipment

In order to execute the distribution hose testing, equipment capable of performing proof pressure testing is required. Testing may be performed either hydrostatically per ASTM D380, §15.1 (preferred) or pneumatically per ASTM D380 §15.2. To perform hydrostatic testing, a means of applying 600 psi of pressure to a fluid filled specimen at 1000 psi/min is required and be able to monitor the applied pressure for a minimum of 10 minutes. The use of a calibrated pressure gauge is recommended. The equipment should be able to withstand the energy of a burst hose and contain the hose fittings in case of a fitting failure.

10.14. Composite manufacturing equipment

While this document provides general guidance on the production and testing of samples specific to this project, it is assumed that the researcher is familiar with or has access to experts in the preparation, execution, and finishing of composite systems. The researcher should have a location suitable for the preparation and curing of composite structures, including space, access to materials, and control of airborne particulates. While this document will provide information specific to the building of the test articles for this test protocol, it will not provide step by step instructions in the individual systems.

ASTM D5687, Preparation of Flat Composite Panels with Processing Guidelines for Specimen Preparation may be used as a guide. All processes and procedures employed for the production of an airworthy composite structure are assumed in the production of the following test articles. Make sure to use all necessary personal protective equipment during the preparation. The area in which the samples are to be built does not need to be of a clean room designation; however it is expected that the room will be clean enough to provide a dust-free area for lay-up and that the build-up area will be free of residue dust and debris.

Equipment to consider:

1) Space and equipment for resin mixing and application
2) Location and means for vacuum-bagging
3) Location and means for prepreg and fabric cutting
4) Plates/dams for panel construction
5) Means of cutting individual specimens and to prepare them per industry standards for testing, i.e. water jet saw
6) Autoclave
7) Cold storage for prepreg

10.15. Glass transition measurement equipment

While the determination of glass transition temperature (T_g) can be determined with multiple types of equipment, for the testing being performed for this program, the use of Dynamic Mechanical Analysis (DMA) is recommended. While the production of specimens and test times are longer than those involved with Thermal Mechanical Analysis (TMA-Flex), the results from DMA are more repeatable. While differential scanning calorimetry is used in industry for the determination of T_g, for this testing it is not considered sensitive enough to observe differences between exposed specimens and the repeatability is noticeably lower.

10.16. Facility for distribution filter systems

In order to execute the Distribution Filter systems, it is necessary to have a space conducive to the installation of the filters and coalescers within their respective housings. While no connections to the housings are required, the housings are to be installed in orientations typical of use. One means of

compliance is to use vertical mounting boards that can be exposed to ambient testing. Filled housings will have noticeable mass, so consideration for stability is required. Access control is expected.

10.17. Centrifuge

In order to execute the grease resistance testing, a centrifuge of 650 rpm and 40 cm swing diameter, or equivalent, is required. The Federal Standard 791, Method 5414.4 provides calculations to demonstrate equivalency.

10.18. Shaker table

In order to execute the grease resistance testing, a shaker table of 3.8 cm (1 ½ “) stroke and 1350 rpm, or equivalent, is required.

11 Test witnessing

11.1. FAA

Test witnessing is required for the collection and reporting of data collected in compliance with this test plan. This data is to be used by the FAA as part of their evaluation for fleet authorization(s). Fuel formulators shall submit a test plan for approval by the FAA before executing testing. Part of the submitted test plan must be a means of test witnessing by an FAA authorized representative.

Testing performed in accordance with an approved test plan shall be witnessed by a representative of FAA AIR600 or their designated representative. The extent of witnessing is at the discretion of the FAA; however, at a minimum the representative shall verify and witness the following segments.

1) Verify certificates of analysis are available for supporting samples as appropriate and for all test fuels
2) Verify instrument calibration/validation as appropriate
3) Inspect test set up (jars, specimen arrays, rigs, ovens, etc.
4) Verify pre-exposure data, record keeping and specimen control
5) Review test plan with test personnel
6) Witness test initiation
7) Witness fuel exchanges at the FAA’s discretion and as appropriate

8) Witness test conclusion

9) Witness post exposure testing at the FAA's discretion and as appropriate

10) Verify testing in accordance with test plan

12Test procedure – Task 1, MIL-DTL-6000 and MIL-DTL-5593 hose

12.1. Hose property testing

12.1.1. Materials

1) MIL-DTL-6000-32 Hose (2" OD) minimum

2) ASTM D910 compliant aviation gasoline produced with maximum limit aromatics

3) Reference Fuel B: Isooctane 70 vol % and Toluene 30 vol % (per ASTM D471, Table 4 in revision-16a

4) Candidate fuel(s)

12.1.2. Specimen preparation

In order to produce test specimens from the hose, a length of hose is cut open length-wise to create a flat slab approximately 6 ¼" wide. Circumference "C" = 2πR, where R = the hose radius = ~1. C = 2 x 3.14 x 1 = 6.28". Die C is 5" long.

1) Lay resulting slab stock flat and using an ASTM D412, Die C, cut tensile strips from the hose per ASTM D471, §13. All specimens shall be cut with the same specimen orientation and in a single cut.

2) Cut volume change specimens using a 1" x 2" die from the hose slab per ASTM D380-94 (2012), §22. All specimens shall be cut with the same orientation. Photograph exemplar specimen.

3) Label each individual specimen with a unique identification.

4) Collect pre-exposure data. Measure the length, width, and thickness of each 1" x 2" specimen and weigh each specimen in air and in water. Photograph exemplar specimen.

5) Collect pre-exposure tensile/elongation data.

12.1.3. Exposure

1) Five each tensile strips and five each volume change specimens are arrayed in separate jars in such a way as to avoid specimen to specimen contact of the test regions. Three sample jars will be prepared for each sample; one filled to ~85% volume fill with Reference Fuel B, one with the 100LL, and one with the test fuel. Additional jars containing additional candidate fuels may be included in the sample set. The lid shall be tightened sufficiently to seal but not so tight there is a risk of cracking the lid. Each jar shall be clearly labelled with the sample identification. An example of exposing specimens to test fluids is shown in Figure 1, of ASTM D471-16a.

2) Place the sample jars in any required safety containment, vent evolved vapors as required by local regulations, and place the sample into the test chamber stabilized at 21 – 27.2 °C (70 – 80 °F).

3) Expose the volume change sample set for 24 hours.

4) Expose the tensile/elongation sample set for 48 hours.

5) Confirm the exposure temperature remains within the desired ranged for the duration of testing.

12.1.4. Post exposure measurements

1) The volume change specimens are removed from the test fluid, rinsed with acetone, ethanol, or methanol, and blotted dry with lint free cloth.

2) Measure the width, length, and thickness of each specimen within 30 seconds of removing from the fluid.

3) Measure the weight in air and the weight in water of each specimen within five minutes of removing the specimens from the test fluid. **NOTE**: **Due to continued outgassing of absorbed fuel, specimens may be observed to continue to lose weight. Record the maximum value observed as soon as the balance has stabilized.**

4) Photograph representative specimens under the same conditions as pre-exposure.

5) The tensile/elongation specimens are removed from the test fluid, rinsed with acetone, and then blotted dry with a lint free cloth. Care must be taken to avoid damaging or stretching the test region of the tensile strips when removing them from the jar and while rinsing them.

6) Install individual test specimens into the grips of the tensiometer per ASTM D412, §12 of revision 06a. Adjust the specimen symmetrically to distribute tension uniformly. Install extensometer centered in the test region.

7) Execute tensile test. Grip separation speed shall be 500 ±50 mm/min (20 ±2 in/min).

8) Record the tensile stress, tensile strength, yield point, and elongation.

12.1.5. Calculations

1) Change in volume is calculated preferably by ASTM D471 §18.2 in revision 16a, based on the change in mass, or by ASTM D471, §13.3 based on dimension.

$$\Delta V, \% = \frac{(M3 - M1)}{d(M1 - M2)} * 100, \qquad where\ d = density\ of\ the\ immersion\ liquid$$

Or

$$\Delta V, \% = \frac{(M3 - M4) - (M1 - M2)}{(M1 - M2)}\ x\ 100$$

Equation 1 – Determining Volume Change by Mass

Where: M1 = initial mass in air

M2 = initial mass in water

M3 = mass in air after exposure

M4 = mass in water after exposure

If determining the volume change by change in dimension, determine the percent change based on the formula

$$\Delta V, \% = \frac{V - Vo}{Vo} * 100$$

Equation 2 – Determining Volume Change by Dimension

Where: V=L x W x T and Vo is the original volume

1) Tensile and elongation calculations are performed using ASTM D412, §13 in revision 16 formulas and the original unexposed cross-sectional area. Elongation is calculated by the equation

$$E = 100 * \frac{[L\ - Lo]}{Lo}$$

Equation 3 – Determining Elongation

Where: Lo is the original spacing between the benchmarks and

L is the spacing at final extension

1) Test results shall be reported as the average values of the specimens. All of the measured values shall be used unless a specific, definable reason for excluding a value is identified and documented.

12.2. Hose internal soak testing

12.2.1. Materials

1) MIL-DTL-6000-6 Hose
2) MIL-DTL-5593 -6 Hose
3) ASTM D910 compliant aviation gasoline produced with the high aromatic content
4) Candidate fuel(s)

12.2.2. Specimen preparation

The FAA Materials Test Plan requires three 12-to-15-inch specimens per sample set for each test fluid, one for the room temperature testing, one for the 71 C, and one as a spare. Volume "V" = $\pi R^2 h$. Assuming 12" length, and a measured ID of 0.372", then 3.14 * $(0.186")^2$ * 12" = 1.30 in^3. The volume, 1.30 in^3 = approximately 21 mL volume. Therefore, a minimum of three 12" hoses is required to provide sufficient fuel for testing. In order to have sufficient fuel for the required gum content analysis at the end of the 71 °C exposure using 12 – 15 inch hoses, a minimum of **four** hoses is required.

The use of four,12 - 15" hoses is one means of compliance. Using three, longer hoses, i.e., 30" lengths, to generate the required fuel volume is permissible as long as the testing requirements, such as hanging unkinked, are still met. Volume = 3.14 * $(0.186)^2$ * 30 = 3.26 in^3 or 50 mL volume per hose. Similarly, more shorter hoses may also be used but as the number of hoses increases, the potential for leaks, cracked fittings, etc. will also increase.

1) After hose segments have been cut, label each individual specimen with a unique identification.
2) Collect pre-exposure data, by measuring every individual specimen for weight, inner diameter and outer diameter.

Inner diameter measurements may be measured in any of several manners, including but not limited to shadowgraph, microscopes, or calibrated sizing ball bearings. The method used shall be reported and shall be used for all subsequent measurements.

1) Photograph with controlled identification, each hose, overall and both hose ends prior to capping the hoses.

2) Air dry the hose length for 24 hours. Use of dry nitrogen at less than 1psig may be used.

3) Install endcaps using industry installation practices and aircraft fittings.

4) Photograph installed fittings with visible specimen identification.

5) Measure the baseline gum content per ASTM D381 on the high aromatic 100LL and the candidate fuel(s).

12.2.3. Exposure

1) Fill the hose specimens with the target test fuel in a manner that assures the hoses are completely full of fuel but do not overfill. Any spillage shall be immediately wiped off external surfaces. The hoses must also be filled such that excessive hydraulic pressure is not generated during the capping process.

2) Hang the hoses vertically, without kinks over a fuel-proof containment basin. Method should permit periodic inspection and additional fill if necessary, during the exposure.

3) Take photographs of each hose at the test start after hanging the hoses vertically. Photographs shall include the hanging mechanism and the caps ends. Photos shall include visible specimen identification.

4) Visually inspect the exterior surfaces, end fittings, and hanging mechanism daily. Visual inspection includes inspections for splitting, leakage, or other signs of degradation.

5) If leakage is observed, determine the source and if possible, remediate.

    a) If leakage is from a fitting, tighten or replace.

    b) If leakage is from the hose itself, as a permeation, attempt to maintain the fill volume during the test duration.

    c) If the leakage is from a physical failure of the hose, such as a crack or pin hole, discard the specimen.

    d) Take photos of any leaks.

6) Open and inspect the fluid fill in each hose over the course of the exposure test. Note that it is probable the hoses will experience fuel loss throughout the testing due to permeability through the hose. This is not fuel loss due to leakage or hose failure but rather to fuel permeation. In similar tests, as much as 5 mL were required every five to seven days during the room temperature exposure and every one to three days during the elevated tests.

a) Open the top of the hose.

b) Inspect the fluid level using an LED flashlight.

c) Fuel shall be added to each hose to maintain the fuel fill throughout the testing as required in a manner which does not contaminate the fuel and does not cause fuel spillage on the hose exterior. Wipe any fuel spillage from the hose surfaces.

d) Note the amount of fuel added.

7) At the end of 30 days, drain and collect the fuel from all the hoses. This fuel will be used to measure the gum content, so care must be taken to avoid contaminating the fuel during the collection process. This includes avoiding contact with the hose exterior, using clean sample containers, and avoiding contact with unprotected skin.

8) Remove the end caps from the sacrificial hose sample and perform post exposure measurements.

9) Refill the remaining specimens with fresh test fuels as previously.

10) Photograph the remaining specimens per item 3.

11) Rehang the hoses per item 2.

12) Put the rig into a test chamber maintained at 71 °C ±3 °C (160 ±5 °F)

13) Visually inspect the specimens daily as per item 4 for the first week. After the first week, inspections may be extended to every 2 – 3 days.

14) At the end of 30 days at 71°C (160 °F), collect the remaining fuel (item 6).

12.2.4. Post exposure measurements

1) Measure the existing gum content of the fuel samples per ASTM D381, using the air jet method provided in § 8.

2) Duplicate all the same original photographs, taken under the same lighting conditions and angles as the pre-exposure photographs.

3) Within one hour after draining the fuel from the hose, the test specimens shall have their endcaps removed and hose weight measured. The O.D. Shall be measured at least 2” from the hose ends to avoid effects from the hose ends. If necessary, after weighing, the hose end may be cut to remove the deformations from the supported ends. The ID shall be measured in the same manner as pre-exposure.

12.2.5. Calculations

No special calculations for hose dimension change are required. All data is reported as comparative differences.

Calculate the existent gum content of aviation fuels per ASTM D381 §12.1 as follows:

$$A = 2000\ (B - D + X - Y)$$

Equation 4 - Nonvolatile Gum Content

Where:

A = the nonvolatile (existent) gum content in mg/100 mL

B = mass of the beaker plus residue

D = mass of the empty beaker

X = mass of the tare beaker, pre-exposure

Y = mass of the tare beaker, post exposure

13Test procedure – Task 2 bladder testing per TSO-C80

Testing of the fuel bladders is comprised of two individual tests after a single exposure. Each individual test is presented in the following sections. The simulated stand test has been modified from TSO-C80, paragraph 8.0.

13.1. General materials

1) A panel cut from finished bladder, so that it includes a finished seam and an airworthy patch
2) A custom cut Viton™ gasket for each test rig
3) Laboratory grade talc
4) ASTM D910 compliant AvGas produced with high aromatic content
5) Candidate fuel(s)
6) Test fluid ASTM D471, §6.1.2, Reference Fuel B (70% iso-octane: 30% toluene by volume).

13.2. Simulated stand test

The simulated stand test is modified from Paragraph 8.0 of TSO-C80. The major differences are the test is run using a panel of fully constructed bladder material in the form of a panel instead of a fuel cube, and the test is run for 42 days without fuel change, at 60 °C (140 °F) instead of 90 days at ambient temperature.

13.2.1. Test specific materials

1) Fuel Bladder Sheets, See Section 6.3. Final size is determined by the selected test rig. Confirm bladder sheet is large enough to extend beyond the edges of the clamping rig.

13.2.2. Specimen preparation

1) Specimens may be procured as finished panels or may be cut from procured FAA approved finished bladders, see Section 6.3. The panels cut from finished bladders are cut to fit the test rig. One bladder sheet is required per test fluid. All sheets should be cut from the same finished bladder.
2) Label each individual specimen with a unique identification.
3) Photograph each bladder specimen internal and external surface, directly and at an oblique angle with sufficient lighting to document the surface.
4) If desired, the test fluids may be dyed.

13.2.3. Exposure

1) Depending on the rig chosen for testing, fill the rig pan to at least 2” depth with the test fluid.
2) Assemble test rig with the inner surface of the panel towards the fuel. The use of a Viton™ gasket is recommended. Place the gasket between the pan and the bladder specimen.
3) After assembly, dust exterior surface with a light coating of laboratory grade talc to facilitate inspections for leaks.
4) Allow test rig to sit upright at test temperature of 60 °C +3/-0 °C (140 °F +5/-0 °F) for one hour.
5) Invert test rig over catch basin.
6) Inspect immediately for leaks. If leaks are observed, identify the source, and if possible, remediate cause. The most common remediation is to tighten the clamps holding the panel to

the rig pan. Care must be taken to avoid over-tightening or damage to the sealing edge of the rig may result.

7) Repeat visual inspection for leaks every 30 to 60 minutes until no further leaks are observed or test is determined failed to seal and is terminated.

8) Once no further leaks are observed, allow the test rig to remain inverted and undisturbed for 14 days.

13.2.4. Post test measurements

1) At the end of 42 days, return the test rig to upright and photograph the surface prior to disassembly. Specifically note any indications of leaks or degradation.

2) Release the bladder specimen from the exposure rig and immediately photograph the interior surface in the same manner as was done pre-test including straight on and at an oblique angle. Specifically note any blisters, bubbles, delamination's, cracks, or other signs of degradation.

    e) Collect fuel for non-volatile residue (gum) testing

3) After the test specimen has dried, re-inspect the interior and external surfaces and note any appearances of degradation not visible while wet.

Test the fluid samples for Nonvolatile Gum Residue in compliance with ASTM D381.

1) Obtain three beakers that have been thoroughly cleaned with gum solvent, rinsed with water and then cleaned in mildly alkaline or neutral pH detergent and dried (see ASTM D381, §11.1.1-2).

2) Heat the air-jet bath to 160 – 165 °C (320 – 330 °F) (See ASTM D381, Table 1 Aviation and motor gasoline). Adjust air flow to 600 mL⁄s 6 ± 90 mL⁄s for the outlet under test (See ASTM D381, §8.1).

3) Weigh the test beakers, D, and tare beaker, X, to the nearest 0.1mg. The unexposed test samples will be D_u and X_u.

4) Add 50 mL ±0.5mL of the appropriate test fluid to each beaker using a clean graduated cylinder. The tare beaker will be empty.

5) Using forceps or tongs, introduce the beaker into the sample well on the Air-Jet equipment.

6) Using forceps or tongs, center the conical air jet over the beaker. Care must be taken to make sure when the air is introduced, the fluid is not splashed from the beaker.

7) Start the air flow and allow the samples to evaporate for 45 minutes ±0.5 minutes.

8) After 45 minutes, move the air jet out of the way with forceps and remove the beakers to a cooling vessel, such as a desiccator that does not contain desiccant. Using desiccant has been shown to cause incorrect results.

9) Allow to cool for at least 2 hours.

10) Reweigh the beakers. These values, B and Y, will be used to calculate Non-volatile Gum Content. The unexposed test samples will be B_u and Y_u.

Test the samples for Stoved Gum Residue

11) After the beakers have been weighed, reheat the beakers in a temperature bath at 300 ±5 °C (572 ±9 °F) for 30 minutes. A muffle furnace may be used.

12) After 30 minutes, remove the beakers to a cooling vessel, such as a desiccator.

13) After the beakers have cooled, reweigh the beakers, B_g and Y_g. The unexposed test samples will be B_{gu} and Y_{gu}.

14) Repeat steps 1 – 13 with samples of the test fluids which have NOT been exposed to bladder material. These beakers will be used to correct the stoved gum values.

13.2.5. Calculations

No special calculations for simulated bladders are required. All data is reported as comparative differences.

Calculate the existent gum content of aviation fuels per ASTM D381 §12.1 as follows:

$$A = 2000\ (B - D + X - Y)$$

Equation 5 Nonvolatile Gum Content

Where:

A = the nonvolatile (existent) gum content in mg/100 mL

B = mass of the beaker plus residue

D = mass of the empty beaker

X = mass of the tare beaker, pre-exposure

Y = mass of the tare beaker, post exposure

13.3. Volume swell

Volume swell testing will be performed in compliance with ASTM D471

13.3.1. Test specific materials

1) Fuel Bladder material

13.3.2. Specimen Preparation

1) Cut volume change specimens using a 1” x 2” die from the panel. All specimens shall be cut with the same orientation.
2) Label each individual specimen with a unique identification.
3) Collect pre-exposure data. Measure the length, width, and thickness of each 1” x 2” specimen and weigh each specimen in air and in water.

13.3.3. Exposure

1) Place five specimens in each of three jars. Arrange them so they do not lay on the bottom of the jar or against each other.
2) Fill each jar with one of the three test fluids: 100LL, test fuel(s), and Reference fuel B.
3) Expose samples for 72 hours at 25 ±3 °C (77 ±5 °F).

13.3.4. Post test measurements

1) The volume change specimens are removed from the test fluid and rinsed with acetone, ethanol, or methanol, and blotted dry with lint free cloth.
2) Measure the width, length, and thickness of each specimen within 30 seconds of removing from the fluid.
3) Measure the weight in air and the weight in water of each specimen within 5 minutes of removing the specimens from the test fluid.
4) Photograph exemplars of each sample set.

13.3.5. Calculations

1) Change in volume is calculated preferably by ASTM D471 §18.2 of revision16a, based on the change in mass, or by ASTM D471, §13.3 based on change in dimension.

$$\Delta V, \% = \frac{(M3 - M1)}{d(M1 - M2)} * 100, \qquad where\ d = density\ of\ the\ immersion\ liquid$$

Or

$$\Delta V, \% = \frac{(M3 - M4) - (M1 - M2)}{(M1 - M2)}\ x\ 100$$

Equation 6 - Determining Volume Change by Mass

Where: M1 = initial mass in air

M2 = initial mass in water

M3 = mass in air after exposure

M4 = mass in water after exposure

If determining the volume change by change in dimension, determine the percent change based on the formula

$$\Delta V, \% = \frac{V - Vo}{Vo} * 100, \quad where\ V = L\ x\ W\ x\ T\ and\ Vo\ is\ the\ original\ volume$$

Equation 7 - Determining Volume Change by Mass

14Test procedure – Task 3 polysulfide tank sealants and Buna-N topcoat testing

Integral tank sealant testing is comprised of two tests: physical properties changes, and peel strength changes. Note that the low adhesion polysulfide sealant, AMS-3284, Type 2, does not require peel strength testing. In addition to the physical properties and the peel strength tests, the Buna-N topcoat also is tested for non-volatile gum extraction.

14.1. Materials

1) Internal sulfide tank sealants, See Appendix D, Tables 1 and 2. **NOTE: Sealant specimens made with SAE 3277 polythioether sealant are recommended by the manufacturer to be produced by the manufacturer. Coordinate with the FAA to procure.**

2) ASTM D910 compliant AvGas produced with high aromatic content.

3) ASTM D910 of typical aromatics (standard FBO procured 100LL) used for exposing the FRC prepared specimens with AMS 3281 Type 2 sealants.

4) Candidate fuel(s)

5) ASTM Reference Fuel B

14.2. Physical properties changes

14.2.1. Specimen preparation

1) Prior to preparing specimens, each sealant must be prepared as a flow sheet constructed in accordance with SAE AS 5127/1C, Section 7.7. Note this includes the preparation of the AMS-3277 polythioether flow sheets by the manufacturer.

2) Using an ASTM D412, Die C, cut tensile strips from the flow sheets. All specimens shall be cut with the same specimen orientation and in a single cut. Avoid obvious voids or discontinuities in the flow sheet.

3) Inspect each tensile strip for large voids, especially within the test region. Depending on the sealant and the flow sheet production process, some porosity is expected. Best attempts to product specimens with uniform and fine porosity shall be made.

4) Using a 1" x 2" die, cut volume change specimens from the flow sheets. All specimens shall be cut in the same orientation and in a single cut.

5) Label each individual specimen with a unique identifier.

6) Collect pre-exposure data. The preferred method for collecting volume change data is to measure the mass of a specimen in air and in water prior to exposure, see ASTM D471, §12. Alternatively, measure each specimens' length, width, and thickness, see ASTM D471, §13.

7) Measure the Shore A durometer per ASTM D2240. Depending on the thickness of the flow sheets, it may be necessary to stack multiple layers of sealant material to obtain the recommended specimen thickness for determining durometer. **NOTE: Depending on the specimen tackiness, this may cause the specimens to stick together. If they are too tacky, then do not stack the specimens and note the deviation.**

8) Measure pre-exposure tensile/elongation.

14.2.2. Exposure

For the full testing of the base polysulfide sealant materials listed in Table D-1, enough specimens for a full 42-day exposure with fuel swaps and the peel strength testing. Additional samples for a fuel type

swap are also required. For the brand name validation testing of the materials listed in Table D-2, only sufficient samples for a 28-day exposure with one fuel swap and no peel strength testing are required.

For the full compatibility testing of the materials from Table D-1, enough specimens for testing every fourteen days are required. To array a sufficient number of specimens in a manner preventing contact of the test regions, it may be necessary to use multiple sample jars for a single sample set. All jars shall be of the same type and construction and shall be loaded, filled, and handled in the same manner. One way to do this is to place five tensile strips in each of three jars (total of 15 tensile strips) and five volume change specimens in each of three jars (total of 15 specimens) for a total of six jars per test fluid. This is one way to achieve the exposure, not the only way. Any method which assures lack of contact between specimens and allows removal of sets of specimens for testing during the course of the testing is permissible. While the sample handling and exposure methods are the same for the full compatibility testing of the materials in Table D-1, there are modifications for the validation testing of the brand specific materials listed in Table D-2, see below.

Each sample container shall be filled to approximately 85% full with the test fluids.

1) Label each container in a manner to assure permanence throughout the test.
2) Place the sample jars in any required safety containment, vent evolved vapors as required by local regulations, and place the samples into a test chamber that has been stabilized to the test temperature of 60 °C +3/-0 °C (140 °F +5/-0 °F).
3) Expose the samples per ASTM D471.
4) After 14 days, remove all sample jars from the test chamber and allow to cool enough for safe handling.
5) Remove a set of specimens for testing (5 tensile and 5 volume change). See testing below.
6) Exchange the test fluid in the remaining samples with fresh test fluid and return the samples to the test chamber.
7) Repeat steps 4 and 5 at 28 days, retaining one set of specimens for testing, exchanging the fuel and returning the remaining samples to the test chamber for an additional 14 days.
8) At the end of 42 days, remove the last set of samples for testing.

Note: For the validation testing of materials in Table D-2, the exposure testing is for a total of 28 days at both room temperature and 60 °C. The fluids are changed at Day 14, but testing is only required on Day 28.

14.2.3. Post test measurements

14.2.4. Volume change

1) The volume change specimens are removed from the test fluid and rinsed with acetone, ethanol, or methanol, and blotted dry with lint free cloth. **NOTE: If specimens are tacky, avoid blotting.**

2) Measure the width, length, and thickness of each specimen within 30 seconds of removing from the fluid.

3) Measure the weight in air and in water of each specimen within five minutes of removing the specimens from the test fluid. **NOTE: Due to continued outgassing of absorbed fluid, the specimens may continue to lose weight. Record the maximum observed weight once the balance has stabilized.**

14.2.5. Tensile/elongation

1) The tensile/elongation specimens are removed from the test fluid, rinsed with acetone, and then blotted dry with a lint free cloth. **NOTE: If specimens are tacky, avoid blotting. Care must be taken to avoid damaging or stretching the test region of the tensile strips when removing them from the jar and while rinsing them.**

2) Install individual test specimens into the grips of the tensiometer per ASTM D412, §12. Adjust the specimen symmetrically to distribute tension uniformly. Install extensometer centered in the test region. The sealants, especially following exposure, may be soft and easily damaged. Care shall be taken when closing grips to avoid crushing the grip region of the sealant tensile strips.

3) Execute tensile test. Grip separation speed shall be 500 ±50 mm/min (20 ±2 in/min).

4) Record the tensile stress, tensile strength, yield point, and elongation.

14.2.6. Hardness

1) It is recommended Shore A durometer be performed on specimens after measurements for volume change have been completed. If specimens were stacked to determine the pre-exposure hardness, the same stacking shall be done for post exposure measurements. The sealants, especially following exposure, may be soft and sticky, and following durometer measurements, be difficult to unstack. All other measurements and photographs should be completed in case of specimen damage.

14.2.7. Calculations

14.2.8. Volume change

1) Change in volume is calculated preferably by ASTM D471 §18.2 in revision16a, based on the change in mass, or by ASTM D471, §13.3 based on change in dimension.

$$\Delta V, \% = \frac{(M3 - M1)}{d(M1 - M2)} * 100, \qquad where\ d = density\ of\ the\ immersion\ liquid$$

Or

$$\Delta V, \% = \frac{(M3 - M4) - (M1 - M2)}{(M1 - M2)}\ x\ 100$$

Equation 8 - Volume Change by Mass

Where: M1 = initial mass in air

M2 = initial mass in water

M3 = mass in air after exposure

M4 = mass in water after exposure

If determining the volume change by change in dimension, determine the percent change based on the formula

$$\Delta V, \% = \frac{V - Vo}{Vo} * 100$$

Equation 9 - Volume Change by Dimension

Where: V=L x W x T and Vo is the original volume

14.2.9. Tensile/elongation change

1) Tensile and elongation calculations are performed using ASTM D412, §13 formulas and the original unexposed cross-sectional area. Elongation is calculated by the equation

$$E = 100 * \frac{[L\ - Lo]}{Lo}$$

Equation 10 - Elongation Calculation

Where: Lo is the original spacing between the benchmarks and

L is the spacing at final extension

14.2.10. Hardness change

1) Change in hardness is calculated by the equation

$$\Delta H\ \% = \frac{(H - H_o)}{H_o} * 100$$

Where H_o = original hardness

H = hardness after immersion

1) Test results shall be reported as the average values of the specimens. All of the measured values shall be used unless a specific, definable reason for excluding a value is identified and documented.

14.3. Peel strength testing (sealants 1-7, 9, Table D-1)

Material compatibility testing is performed in compliance with SAE AS5127. The exposure times and temperatures are as developed for PAFI Material Test Plan and may not reflect industry standard test protocols.

14.3.1. Specimen preparation

Peel strength panels shall be prepared in compliance with SAE AS5127/1, §8. Section 8 indicates the substrate and substrate surface will be specified in the individual sealant specifications.

In addition to the aluminum panels specified in each of the SAE AS standards, an additional test matrix for the AMS 3281 Type 2, B2 sealant shall be tested using the fiber reinforced composite (FRC), Toray Advanced Composites BT250E-1 prepreg on E-glass. The panels should be the same size and shape as the specified aluminum panels and peel strength test specimens prepared in the same manner. Standard surface bond preparation is acceptable, i.e., grit blast (aluminum oxide) and/or abrasion with aluminum oxide sandpaper. It is recommended these panels be produced at the same time as the composite test specimen are prepared. See Section 19.2.5.

There are two exposure tests for peel strength. A standard 42-day exposure with peel strength tests at day 14, 28, and 42. Additionally, a peel strength test is executed following an exposure in 100LL for 70 days followed by the test fuel for 70 days. Sufficient panels from the same lot of sealant are required to perform all of the tests. Assuming two test fluids, one 100LL and one test fuel, a minimum of 12 specimens per sealant are required. It is recommended that additional specimens be prepared so that if there is a problem with a panel during the course of testing, a spare is available.

Preparation by Class

1) Prepare the panels per sealant Class

Class B sealants (Sealants 1-4, Appendix D)

- See AS5127 §8.1.1

a) Peel strength test panel materials described in the applicable material specification shall be prepared and cleaned in accordance with AS5127 (6).

   i. AMS-8802 (Type 1 and Type 2) – 2 aluminum panels (each), AMS4045, sulfuric acid anodized in accordance with AS5127 (6.3) and coated with AMS-C-27725 Type 2.

   ii. AMS-3276 – 2 Aluminum panels, AMS4045, sulfuric acid anodized in accordance with AS5127 (6.3) and coated with AMS-C-27725 Type 2.

   iii. AMS-3277 – 2 Aluminum alloy, AMS4045, panels, sulfuric acid anodized in accordance with AS5127 (6.3) and coated with AMS-C-27725.

b) Panel dimensions shall be as shown in Figure 22 of AS5127/1 (see Figure 3 below).

c) Panel test surfaces shall be coated with sealing compound as shown in Figure 22 of AS5127/1 (see Figure 3 below) to a total sealant thickness of 0.125 inch (3.18 mm) covering approximately 5 inches (127 mm) from one end of the test panel.

Class B-1/2 (Sealant 5-6, Appendix D)

- See AS5127, §8.1.3

a) Peel strength panel materials described in the applicable material specification shall be prepared and cleaned in accordance with AS5127 (6).

   i. AMS-3281 – Two AMS4045 aluminum test panels chemically treated according to AS5127 (6.2) shall be used. After conversion coating, the sealing compound shall be applied to the peel strength test panels as described in AS5127/1 (8.1.1).

   ii. AMS-3281 – Two FRC (Toray Advanced Composites BT250E-1/E-glass) test panels shall be grit blasted with aluminum oxide and/or abrasion with aluminum oxide sandpaper. After abrading the surfaces, the sealing compound

shall be applied to the peel strength test panels as described in AS5127/1 (8.1.1).

Class B-1/6 (Sealant 8, Appendix D)

- See AS5127, §8.1.3

a) Peel strength panel materials described in the applicable material specification shall be prepared and cleaned in accordance with AS5127 (6).

   i. AMS-83318 – Two AMS4045 aluminum test panels chemically treated according to AS5127 (6.2) shall be used. After conversion coating, the sealing compound shall be applied to the peel strength test panels as described in AS5127/1 (8.1.1).

Class A (Sealant 9, Appendix D)

- See AS5127 §8.1.1

a) Peel strength test panel fabrication using Classes A sealing compounds shall be accomplished as in 8.1.1, except that the initial 0.125 inch (3.18 mm) thick layer of sealing compounds shall be constructed in thin layers, allowing each layer to flash off solvent before adding to the thickness. The completed assembly shall be fully cured at standard conditions in accordance with AS5127 (4), for the time defined in the applicable material specification.

Building Specimens

1) A reinforcing material shall be used in the construction of the 180-degree peel strength test panels. A 20 to 40 mesh screen of aluminum, stainless steel or Monel metal shall be used as the reinforcement. Mesh shall be cleaned in accordance with AS5127 (6) and may be primed with an adhesion promoter as recommended by the sealing compound manufacturer.

   a) A 2.75 inch wide x 12 inch long (69.9 x 305 mm) strip of reinforcing material shall be impregnated with sealing compound so that approximately 5 inches (127 mm) from one end of the reinforcement is completely covered. Two each 1.0 inch wide x 12 inches long (25.4 x 305 mm) strips of reinforcing material may be used in place of the 2.75 inch (69.9 mm) wide strip. Sealing compound must be worked into the screen, working both sides of the material with sealant.

2) The sealing compound coated end of the reinforcement shall be placed on the sealing compound coated panel and smoothed to the 0.125 inch (3.18 mm) thick layer of sealing compound, ensuring that no air is trapped between the reinforcement and the sealing compound. An additional coating of sealing compound shall then be applied over the reinforcement to approximately 0.031-inch (0.79 mm) thickness. The complete assembly depicted in either Figure 22 (Figure 3) or 23 (Figure 4) shall be cured at standard conditions in accordance with AS5127 (4), for the time defined in the applicable material specification.

   a) AMS-S-8802 – Sealant shall be cured for 72 hours at Standard Conditions.

   b) AMS-3276 – Sealant shall be cured for 14 days at Standard Conditions. Sealant may be given an accelerated cured for 48 hours at Standard Conditions followed by 24 hours at 60 °C (140°F).

   c) AMS-3277 – Sealant shall be cured for 7 days at Standard Conditions. An accelerated cure of 24 hours at standard conditions (4.5.2) plus 24 hours at 140 °F (60 °C) may be used.

   d) AMS-3281 - The peel strength test specimens shall be cured for 10 hours at Standard Conditions in accordance with AS5127 (4), followed immediately by immersion.

   e) AMS-83318 - The peel strength test specimens shall be cured for 10 hours at standard conditions in accordance with AS5127 (4), followed immediately by immersion.

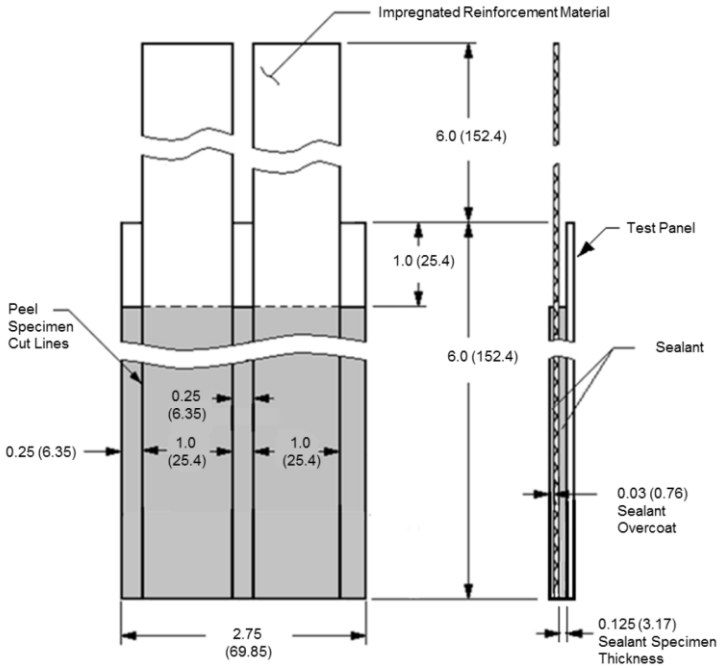

Note: Dimensions in inches (millimeters)

Figure 3 - AS5127/1C Figure 22 - Five Inch Peel Specimen Configuration

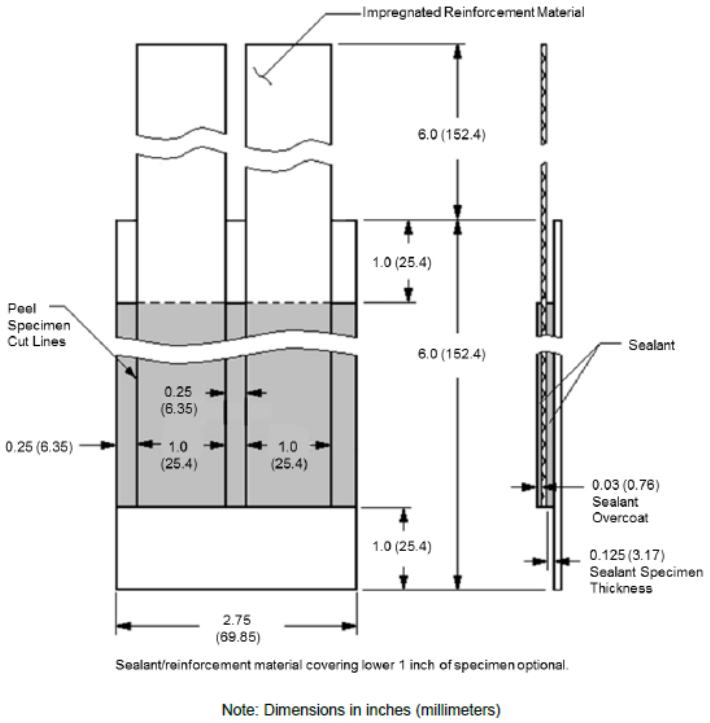

Figure 4 - AS5127/1C Figure 23 - Four Inch Peel Specimen Configuration

14.3.2. Exposure

14.3.3. Class A and B sealants (Sealants 1-7 and 9, Appendix D, Table 1)

1) Immediately after cure, panels will be immersed in the respective test fluids; 100LL high aromatic and test fuel(s).

NOTE: Sealant AMS 3281 Type 2 (sealant 6) on the fiber reinforced composite panel shall **also** be exposed to a typical 100LL with reported aromatic content.

   a) Sufficient specimens shall be placed in the 100LL high aromatic, that at the end of 70 days, a specimen(s) exposed to 100LL can be moved to an additional exposure of 70 days in the test fuel(s).

2) All specimens shall be started in their respective test fluids and exposed for a total of 42 days at 60 +3/-0 °C (140 +5/-0 °F).

b) A specimen shall be removed for testing and the fluid exchanged for fresh every 14 days (day 14, 28).

c) The remainder of the specimens will be returned to the fresh test fluid.

3) After day 42, the remaining specimens (minimum of two) will continue to be exposed to the 100LL at 60 +3/-0 °C (140 +5/-0 °F) for a total of 70 days.

d) The fluid will continue to be exchanged for fresh fuel every 14 days (day 42 and day 56), but no specimens will be removed.

4) After day 70, a minimum of one specimen will be removed from the 100LL and transferred to a container with the test fuel(s).

5) Exposure of the specimens in their respective fuel (100LL and test fuel) will continue for an additional 70 days at 60 +3/-0 °C (140 +5/-0 °F).

e) The respective test fluids will be exchanged for fresh test fluid every 14 days through the duration of the second 70-day exposure.

14.3.4. Post test measurements

1) At the end of the respective exposures, a test panel will be removed for peel strength testing per SAE AS5127/1.

2) Two 25 mm (1 inch) wide strips shall be cut through the reinforcement and sealing compound to the metal surface of the test panel and extended the full length of the wire screen.

3) The test panel shall be installed in a tensile test machine. A plate may be fastened or clamped to the back of the panel to help support the substrate during test and to keep the panel parallel to the peel direction. The upper jaw (or the moving jaw for a horizontal tensile test machine) shall be clamped to the test panel, and the lower jaw shall hold the cloth or screen reinforcement as shown in AS5127/1 Figure 24 (see Figure 5 below). Note that after the specified exposures in fluids, the panels shall remain in the respective fluid until the fluid is at standard conditions in accordance with AS5127 (4). The peel strength testing process (removing the fluid from gripped area, cutting the 1-inch strips, and the beginning of the testing of the panel) must be started within 5 minutes after panel removal from the test fluid.

4) The specimens shall be stripped back at an angle of 180 degrees as shown in Figure 5 below to the metal panel in a suitable tensile testing machine having a jaw separation rate of 51 mm (2 inches) per minute. Make an initial cut through the sealing compound to the substrate panel.

a) During the peel strength testing, a minimum of three additional cuts shall be made through the sealing compound to the substrate panel in an attempt to promote adhesive failure between the sealing compound and the substrate.

   i. Should adhesive failure between the sealing compound and the reinforcing material begin, another cut should be made immediately, and the data shall be excluded.

   ii. The intent is to create a minimum of three sections approximately 25 mm (1 inch) long; a minimum of two cuts shall be made for each layer of immersion fluid.

   iii. The results shall be the numerical average of the peak loads during cohesive failure within the sealing compound, not including the load due to cutting the specimen.

5) The averaged value of peak peel strength loads, and percent cohesive failure of the peel strength specimens shall be checked for conformance to the provided pass/fail criteria (See Section 24.3). Bubbles, knife cuts, failure of the sealant to the reinforcing material, failure of a substrate's coating to the substrate, or other causes that are obviously not the fault of the sealing compound shall not count as failure.

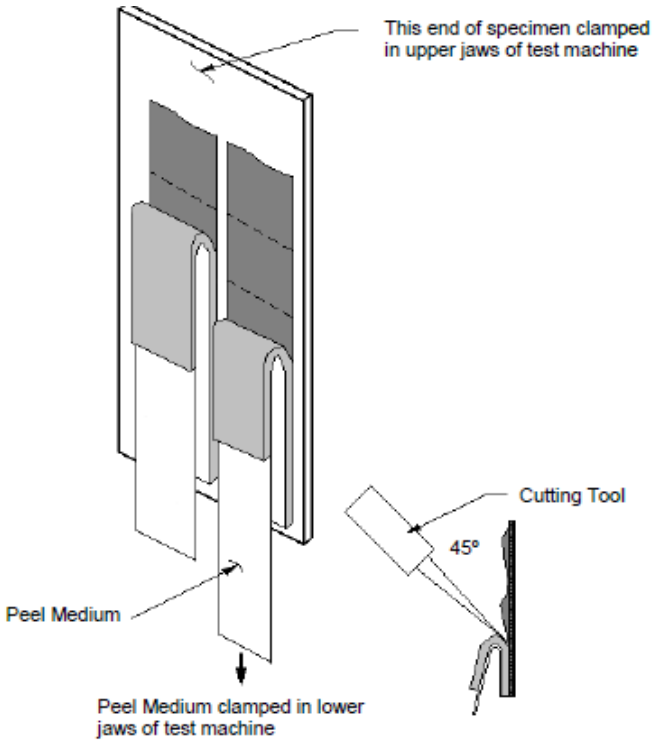

Figure 5 - AS5127/1C Figure 24 - Peel Strength Test

14.3.5. Calculations

No special calculations required.

14.4. Buna-N topcoat peel strength (sealant 10)

Sealant 10, Buna-N Topcoat, Appendix D.

14.4.1. Specimen preparation

Material compatibility testing is performed in compliance with SAE AS5127. The exposure times and temperatures are as developed for PAFI Material Test Plan and may not reflect industry standard test protocols.

- See AMS-S-4383, §4.6.8

  a) Peel strength panel materials described in AMS-3284 shall be prepared and cleaned in accordance with AMS-S-4383.

     i. Three AMS-QQ-A-250 alcad aluminum panels, measuring 0.8 x 76 x 152 mm (0.032 x 3 x 6 inches), shall be used for this test. Two of the panels shall be coated with 0.125 inch (3.2 mm) thick polysulfide sealing compound qualified to AMS-S-8802 and cured in accordance with manufacturer's instructions.

     ii. Cut three 76 x 305 mm (3 x 12 inch) strips of clean cotton sheeting conforming to CCC-C-432.

     iii. Wipe the surfaces of the polysulfide sealant lightly with methyl ethyl ketone.

     iv. The test panels shall then be given three brush coats of topcoat compound, allowing 30 minutes of air drying between coats.

     v. Five minutes after application of the third coat, the fabric strips shall be coated on one side with the topcoat compound and placed, coated side down, on the test panels, followed by a final heavy coat of the topcoat compound brushed on the topside of the fabric. Work out any bubbles of air existing between the applied fabric and the other surfaces.

vi. Air-dry the topcoat compound for 30 minutes followed by one more heavy brush coat. After air-drying for 72 hours at standard conditions (AS5127 (4)) followed by heating for 24 hours at 49 °C (120 °F), the panels shall be immersed in test fluid.

14.4.2. Exposure

a. Following the last specimen preparation step of heating for 24 hours at 49 °C (120 °F), the panels shall be immersed in test fluids for 7 days at 60 °C (140 °F).

14.4.3. Post test measurements

b. After immersion, cut 2.5 cm (1 inch) wide strips into the test panel and test in accordance with AS5127/1 (see Section 14.3.4 above). The peel strength shall be the force required to separate the topcoat compound from either the metal surface or from the polysulfide sealant. Report location of separation.

14.4.4. Calculations

No special calculations required.

14.5. Buna-N topcoat non-volatile content

14.5.1. Specimen preparation

Three AMS4049 aluminum panel, measuring 0.032 x 1 x 5 inches (0.8 x 25 x 126 mm), shall be coated and cured by the following procedure.

1) The test panels shall be given a single dipcoat of the topcoat compound to produce a film having a thickness of 0.0005 to 0.0030 inch (0.013 to 0.076 mm) when cured.

2) The coated panels shall be cured by suspending or placing vertically for a period of 48 hours at standard conditions (20 – 25 °C and RH 30 – 50%) in a draft-free enclosure such as a ventilated unheated laboratory oven to reduce the tendency of blister formation.

14.5.2. Exposure

1) Immerse a single test panel in a flask containing 250 mL of each test fluid; 100LL, UL100, and Reference Fuel B conforming to ASTM D471, for 48 hours at room conditions.

14.5.3. Post test measurements

Test the fluid samples for Nonvolatile Gum Residue per ASTM D381.

1) Obtain three beakers that have been thoroughly cleaned with gum solvent, rinsed with water and then cleaned in mildly alkaline or neutral pH detergent and dried (see ASTM D381, §11.1.1-2).

2) Heat the air-jet bath to 160 – 165 °C (320 – 330 °F) (See ASTM D381, Table 1 Aviation and motor gasoline). Adjust air flow to 600 mL⁄s 6 ± 90 mL⁄s for the outlet under test (See ASTM D381, §8.1).

3) Weigh the test beakers, D, and tare beaker, X, to the nearest 0.1mg. The unexposed test samples will be D_u and X_u.

4) Add 50 mL ±0.5mL of the appropriate test fluid to each beaker using a clean graduated cylinder. The tare beaker will be empty.

5) Using forceps or tongs, introduce the beaker into the sample well on the Air-Jet equipment.

6) Using forceps or tongs, center the conical air jet over the beaker. Care must be taken to make sure when the air is introduced, the fluid is not splashed from the beaker.

7) Start the air flow and allow the samples to evaporate for 45 ±0.5 minutes.

8) After 45 minutes, move the air jet out of the way with forceps and remove the beakers to a cooling vessel, such as a desiccator that does not contain desiccant. Using desiccant has been shown to cause incorrect results.

9) Allow to cool for at least 2 hours.

10) Reweigh the beakers. These values, B and Y, will be used to calculate Non-volatile Gum Content. The unexposed test samples will be B_u and Y_u.

Test the samples for Stoved Gum Residue

11) After the beakers have been weighed, reheat the beakers in a temperature bath at 300 ±5 °C (572 ±9 °F) for 30 minutes. A muffle furnace may be used.

12) After 30 minutes, remove the beakers to a cooling vessel, such as a desiccator.

13) After the beakers have cooled, reweigh the beakers, B_g and Y_g. The unexposed test samples will be B_{gu} and Y_{gu}.

14) Repeat steps 1 – 13 with samples of the test fluids which have NOT been exposed to bladder material. These beakers will be used to correct the stoved gum values.

14.5.4. Calculations

Calculate the existent gum content of aviation fuels per ASTM D381 §12.1 as follows:

$$A = 2000\ (B - D + X - Y)$$

Equation 11 Nonvolatile Gum Content

Where:

A = the nonvolatile (existent) gum content in mg/100 mL

B = mass of the beaker plus residue

D = mass of the empty beaker

X = mass of the tare beaker, pre-exposure

Y = mass of the tare beaker, post exposure

Calculate the stoved gum residue by subtracting the final residual weight of the non-exposed fuel samples, B_{gu} from the final residual weight of the exposed fuel samples, B_g. This removes any residue related to the fuel alone from the final result, determining the residue related to extractables from the bladder material.

$$Stoved\ Gum = B_g - B_{gu}$$

Equation 12 - Correcting Stoved Gum

15Test procedure – Task 4 additional elastomer testing

15.1. Compression set

15.1.1. Materials

1) SAE-AMS-P-5315-210, 1” Nitrile O-ring, see Section 6.5
2) MIL-DTL25988-210 (AMS-R-25988), 1” Fluorosilicone O-ring, see Section 6.5
3) SAE-AMS-7379-210, 1” Fluorocarbon O-ring, see Section 6.5

4) SAE-AMS-7276-210, 1” Fluorocarbon O-ring, see Section 6.5

5) SAE AMS-7287-210 (supersedes AMS-R-83485), 1” Fluorocarbon O-ring, see Section 6.5

6) ASTM D910 compliant aviation gasoline produced with the high aromatic content

7) Candidate fuel(s)

15.1.2. Specimen preparation

1) Label each individual specimen with a unique identification. It has been found useful to use a series of symbols, for example a number of dots, to tell small specimens apart.

2) Photograph representative specimens of each type of O-ring.

3) Measure the thickness of the O-ring in compliance with ASTM D3767, Procedure A. Take four measurements equidistance apart.

4) Compression testing shall be performed in compliance with ASTM D1414, Sections 10 and 11. Specimens are prepared by cutting the O-ring so that it is a continuous tube as opposed to a finished O-ring. This is to remove errors due to captured air.

5) Calculate a spacer distance that is 75% of the measured thickness of the O-ring to within 0.025 mm (0.001 inch). Insert spacers on either side of the specimens and close the compression plates. A sufficient number of compression plates shall be available to permit five specimens to be removed and tested at days 14 and 28 without disturbing the compression of other specimens.

15.1.3. Exposure testing

1) Close O-ring specimens into the compression plates to a thickness of 75%. Place the closed plates into a container filled with the test fluid sufficient to completely cover the compression rigs and close the container.

2) Expose the samples at 71 °C (160 °F) per ASTM D1414, Section 11 for a total of 42 days (~1000 hrs.), with specimen removal and fuel swap at day 14 and 28.

3) After 14 days remove the sample containers and refill each container with fresh fuel, retaining one sample set for testing. Return the containers to the sample test chamber.

4) Release the compression of the set of specimens to be tested and allow them to cool for 30 minutes in fresh, room temperature test fluid.

5) Repeat step 3 and 4 on day 28.

6) Remove final set of specimens on day 42.

15.1.4. Post test measurements

1) Measure the individual specimens' thickness after cooling at four locations per ASTM D3767, Procedure A and record the values matched to the pre-exposure values.

15.1.5. Calculations

Compression set is determined in compliance with ASTM D395, Section 14.

$$C = \left[\frac{(t_o - t_i)}{(t_o - t_n)}\right] * 100$$

Equation 13 - Compression Set

Where t_o = original thickness

t_i = initial thickness

t_n = thickness of the spacer

Test results shall be reported as the average values of the specimens. All of the measured values shall be used unless a specific, definable reason for excluding a value is identified and documented.

15.2. Tensile/elongation and hardness

15.2.1. Materials

8) SAE-AMS-P-5315-226, 2 ¼" Nitrile O-ring, see Section 6.5

9) MIL-DTL25988-226 (AMS-R-25988), 2 ¼" Fluorosilicone O-ring, see Section 6.5

10) SAE-AMS-7379-226, 2 ¼" Fluorocarbon O-ring, see Section 6.5

11) SAE-AMS-7276-226, 2 ¼" Fluorocarbon O-ring, see Section 6.5

12) SAE AMS-7287-226 (supersedes AMS-R-83485), 2 ¼" Fluorocarbon O-ring, see Section 6.5

13) ASTM D910 compliant aviation gasoline produced with the high aromatic content

14) Candidate fuel(s)

15.2.2. Specimen preparation

1) Label each individual specimen with a unique identification. It has been found useful to use a series of symbols, for example dots, to tell small specimens apart.

2) Measure O-ring thickness in compliance with ASTM D3767 Procedure A.

3) Measure the Shore M durometer in compliance with ASTM 2240. Select a pressure foot based on the O-ring thickness.

4) Photograph examples of each O-ring type.

5) Determine pre-exposure tensile/elongation values. Testing shall be in compliance with ASTM D1414, Section 8.

15.2.3. Exposure testing

1) Hang a minimum of four, preferably six, uncut O-ring specimens on non-reactive hangers such that specimens do not interfere with each other, and all O-rings are hung at the same level. The height of the hanging rack shall be sufficiently tall that O-rings hang freely and do not kink at the bottom or rest on the floor of the container. One O-ring will be used for measuring hardness and dimensions after exposure. See ASTM D1414, §14.

2) Expose the samples at 71 °C (160 °F) per ASTM D1414, §11 for a total of 42 days (~1000 hrs.), with specimen removal and fuel swap at day 14 and 28.

3) After 14 days remove the sample containers and refill each container with fresh fuel, retaining one sample set for testing. Return the containers to the sample test chamber.

4) Allow the set of specimens to be tested to cool for 30 minutes in fresh, room temperature test fluid.

5) Repeat step 3 and 4 on day 28.

6) Remove final set of specimens on day 42.

15.2.4. Post exposure measurements

1) Remove one O-ring and measure the thickness of the O-ring in compliance with ASTM D3767 Procedure A.

2) Measure the Shore M durometer in compliance with ASTM 2240. Select a pressure foot based on the O-ring thickness.

3) Tensile/elongation testing shall be performed in compliance with ASTM D1414, §8. The use of ball-bearing spools at least 9 mm (0.35 in.) in diameter and being capable of being brought within 19 mm (0.75 in.) center-to-center distance at closest approach.

4) Bring the tensiometer grips close enough together the O-rings can be installed without stretching. Grip separation speed shall be 500 ± 50 mm/min (20 ± 2 in/min).

5) Record the breaking force F at rupture, and the center-to-center distance D, between the spools at rupture to the nearest 2.5 mm (0.1 in.).

15.2.5. Calculations

1) Change in hardness is calculated by the equation

$$\Delta H\ \% = \frac{(H - H_o)}{H_o} * 100$$

Equation 14 - Change in Hardness

Where H_o = original hardness

H = hardness after immersion

2) Test results shall be reported as the average values of the specimens. All of the measured values shall be used unless a specific, definable reason for excluding a value is identified and documented.

3) Tensile/Elongation when using spool grips is calculated per the process provided in ASTM D1414, §8.4.1.1. For tensile strength,

$$T = F/A$$

Equation 15 - Tensile Strength

where: T = tensile strength,

F = breaking force, and

A = twice the cross-sectional area calculated from axial thickness, W, as follows:

$$A = \frac{\pi W^2}{2} = 1.57W^2$$

Equation 16 - Axial Thickness

therefore:

$$T = F/1.57W^2$$

Equation 17 - Tensile Strength of O-rings with Axial Thickness

Calculate Ultimate Elongation as follows and provided in ASTM D1414, §8.4.2.1:

$$Ultimate\ elongation, \% = \left[\frac{2D + G - C}{C}\right] * 100$$

Equation 18 - Ultimate Elongation of O-rings

where D = distance between centers of the spool grips at the time of rupture

G = circumference of one spool (spool diameter × 3.14),

C = inside circumference of the specimen (or inside diameter × 3.14).

4) Test results shall be reported as the average values of the specimens. All of the measured values shall be used unless a specific, definable reason for excluding a value is identified and documented.

16Test procedure – Task 5 paint staining and adhesion testing

16.1. Staining and adhesion tests

16.1.1. Materials

Assuming one test fuel and one 100LL

1) Minimum of ten 2” x 4” panels with Axalta/Imron AF400 system
2) Minimum of ten 2” x 4” panels with AN 10P8-11/Imron AF400 system
3) Minimum of ten 2”x4” panels with Axalta/Imron AF700/Imron AF740 system
4) Minimum of ten 2”x4” panels with AN 10P8-11/ Imron AF700/Imron AF740 system

5) Minimum of ten 2” x 4” panels with Axalta/Imron 3500 system

6) Minimum of ten 2” x 4” panels with AN 10P8-11/Imron 3500 system

7) Minimum of ten 2” x 4” panels with Axalta/Centari 5.10 system

8) Minimum of ten 2” x 4” panels with Sherwin Williams CM0483787/Jet Glo Express 840 system

9) Minimum of ten 2” x 4” panels with AkzoNobel 10P30-5Y fuel tank primer

10) Minimum of ten 2” x 4” panels with ANAC 454-4-1 fuel tank primer

11) ASTM D910 compliant aviation gasoline produced with the high aromatic content **that is fully dyed.**

12) Candidate fuel(s)

16.1.2. Specimen preparation

1) Photograph each panel under controlled lighting and camera settings.

2) Test the sample paint hardness per ASTM D3363 using hardness levels H through 3H.

    a. Avoid testing in the area where the adhesion “X” is to be inscribed.

    b. Any specimen not meeting the hardness may be insufficiently cured and should not be used.

16.2. Adhesion exposure testing

1) For adhesion testing, cut an “X” into the surface of the panel per ASTM D3359. This “X” is the industry standard adhesion test and can be related to a scratch in an aircraft painted surface. Avoid the area where the hardness test was performed.

    a. Note that specimens coated with 10P30-5Y and ANAC 454-4-1 primer have a coating thickness below the minimum for “X” adhesion testing. These panels must be cut per ASTM D3359, Test Method B, Cross-Cut Tape Test. The use of a cross-hatch cutting tool is recommended. Per ASTM D3359, §13.2.2, make six cuts, two millimeters apart.

2) Determine pre-exposure adhesion test per ASTM D3359 on an unexposed panel.

3) Immerse panels in test fluid leaving at least one inch of test panel above fluid level, submerging the “X”, to a level near or just at the tape, or as defined by the fill and angle method.

a. Fill all jars with the same volume of test fluid. Allow the panels to rest at an angle in the jar so that a fixed, repeatable submersion depth above the "X" is achieved. This separation will be used to evaluate color changes within a specimen and must be repeatable.

b. Alternatively, mark each panel horizontally, above the "X", with a strip of masking tape.

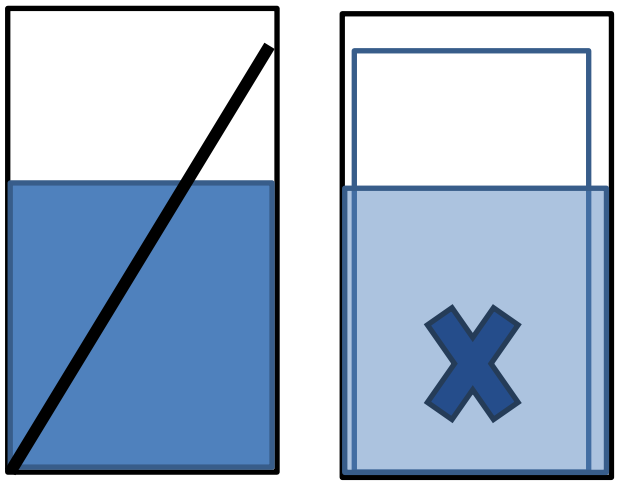

Repeatable fuel

Figure 6 - Example of Panel in a Jar

4) Place a "traveler" specimen into a container but do not add any fluid. Treat this sample the same as the two fluid samples.

5) Expose panels for 28 days at room temperature. Visually inspect at 14 days and note any obvious changes.

   a. No fuel change is required, but if fluid level has fallen below the tape, add additional fuel and note the addition in the lab notes.

16.2.1. Post exposure measurements

1) At the end of the 28-day exposure, rinse the specimens with isopropanol and allow to dry.

2) Perform adhesion test per ASTM D3359 first and **then** perform the visual inspection.

   a) Report results comparative to the 100LL exposed panels and to the unexposed traveler panel.

3) **After** adhesion testing, remove the protective tape if used, and perform a visual inspection comparing the exposed portion of the panel to the unexposed portion of the panel.

4) Place panels in the controlled lighting environment and photograph using the same camera settings.

a) Visually compare the protected portion of the specimen to the exposed specimen and compare the exposed section to the exposed traveler. Report observed color changes comparative to the 100LL exposed panels.

5) Measure coating hardness.

16.2.2. Calculations

No special calculations are required.

16.3. Paint staining exposure testing

A second set of specimens are required for the paint staining testing, but the set is comprised of the same materials, and the same coupon construction is used (see Appendix F).

The purpose of this testing is to permit the fuel to drip onto the painted surface and then allowed to evaporate between drips. The following is one means of compliance.

1) Set up the drip rig in a hood or other area suitable for the presence of flammable liquids and vapors.

2) Using a lab stand or other suitably stable platform, place/suspend the test specimen above any fluid capture container to avoid the specimen soaking in the fluid after it has run off the specimen surface. Metal, glass, Teflon™ or other materials are acceptable for this container assuming material compatibility. Depending on the size of the catch container and the rate of evaporation of the fluid under test, it may be necessary to empty this container during the course of the test.

3) Cut an "X" into the paint through to bare metal, such as would be done for the adhesion test. The "X" should be in the upper 20% of the specimen.

4) Place a paint panel specimen with the painted side up such that it is held at a maximum 10 ° minimum 2 ° angle as measured from the tabletop (See Figure 7). Affix the panel at top and bottom to assure stability.

5) Set up a means of dripping fuel at a rate of two (2) drops per five (5) seconds (approximately 0.02 mL per drop). It is not required to measure the volume of the drop. The goal is to have a volume which is large enough to prevent evaporation at the dropping tip. At this flow rate or less, repeatable test results have been successfully achieved.

a. One means of supplying the fuel drip is a periastaltic pump such as is used with an HPLC.

b. The rig is easiest to set up if the exit line from the pump is an aluminum line. Soft lines will require additional fixturing to hold the tip over the surface of the paint specimen and to avoid tube deformation over the length of the test.

c. The exit tip needs to be close enough to the specimen surface to allow the droplet to impact the surface of the paint specimen. A distance of 2.5 to 3.6 cm (1 to 1.5 inches) is reasonable.

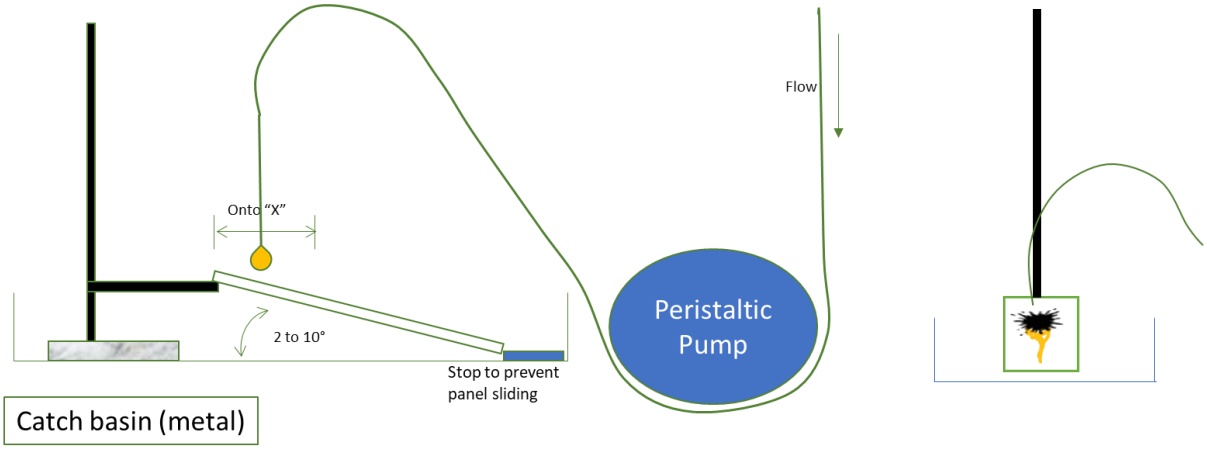

Figure 7 - Example Fuel Dripping Rig for Paint Staining Test

6) The length of the test shall be driven by the volume of test fuel. The exposure volume is to be 11.4 L (3 gallons). Insert the input line to the pump into a closed container of test fluid. A metal can or glass bottle with a hole drilled through the lid through which the supply line can be introduced is one way to do this.

a. Make sure the supply line reaches to the bottom of the supply container. Alternatively, make sure that there is enough fluid above the supply line to provide the 11.4 L of test fluid.

b. If available space or other condition restricts the available volume size to less than 11.4 L (3 gallons), a second container or a means of refilling the source volume mid-test must be considered.

7) Begin dripping fuel onto the surface of the paint specimen. Assure the drips are not evaporating before leaving the exit, are hitting in the upper 20% of the panel, are landing in the "X", and are experiencing evaporation. Fuel running down the panel is acceptable.

8) Allow dripping to continue until 11.4 L (3 gal) of test fluid have impinged on the surface.

    a. At 0.5 mL / minute, this will take approximately 16 days.

16.3.1. Post exposure measurements

1) Immediately at the end of the exposure perform a visual inspection.

    a) Report results comparative to the 100LL exposed panels.

    b) Look for color changes, bubbling of the surface, paint removal, etc.

    c) Note the size and shape of any staining patterns.

    d) Inspect the edges and backs of the panels and comment on any changes due to edge effects.

2) After visual inspection, photograph the specimens

    a) Gently rinse the specimens with fluid under test, isopropyl alcohol, or as instructed by the test fuel manufacturer. Because of potential damage in the paint surface at the "X" incision, do not attempt to manually dry the paint specimen. Allow the specimens to air dry.

    b) Place panels in the same controlled lighting environment and photograph using the same camera settings as used pre-exposure.

16.3.2. Calculations

No special calculations are required.

17Test procedure – Task 6 fabric testing

17.1. Fabric sample construction

17.1.1. Materials

See Appendix F for materials. Assuming one test fuel and one 100LL

1) A minimum of 15 wooden frames as described in Section 0. Three each of each system is required.

2) Poly-Fiber Fabric System
    a. Poly-Fiber Polyester fabric, Medium
    b. Poly-Tak cement
    c. Poly-Bruch Vinyl coating
3) Ceconite/Randolph Fabric System – Non-Tautening Butyrate
    a. Ceconite 102 polyester fabric
    b. Ceconite Super Seam cement
    c. A-1690 Clear Nitrate Dope
4) Ceconite/Randolph Fabric System – Non-Tautening Nitrate
    a. Ceconite 102 polyester fabric
    b. Ceconite Super Seam cement
    c. E-4964 Clear Butyrate Dope
5) Superflite Fabric System
    a. Superflite Fabric VI
    b. Superflite U500 cement
    c. Superflite Fabric Primer Catalyst
    d. Superflite 2-part urethane coating
6) Stewart Systems Fabric System
    a. Superflite Fabric VI
    b. EkoBond Glue
    c. Ekofill coating
    d. Stewart Systems Cleaner
7) Wax paper or other non-stick material
8) Hobby iron or other iron calibrated to temperature
9) Methyl ethyl ketone (MEK)

17.1.2. Specimen preparation

All construction shall be performed to airworthy standards following specific instructions provided by each systems' manufacturer. Proper construction is critical to the testing. It is recommended that a professional with experience in aircraft fabric construction be employed to construct or to inspect the systems.

1) Preparing the frame

Prepare the frame, both the outer edge and one half of the cross member using recommended practices for each of the five systems with the appropriate surface treatment. The choice of material for the cross member is at the discretion of the researcher, but should be conducive to sectioning after the fabric system has been constructed.

- Poly-fiber – Poly-Tak will be applied at the time of assembly
- Ceconite/Randolph – Treat the surface with the nitrate dope for both the nitrate dope system and the butyrate dope system
- Superflite – U500-01 will be applied at the time of assembly
- Stewart Systems – Treat surface with a thin coat of EkoBond Cement and let dry

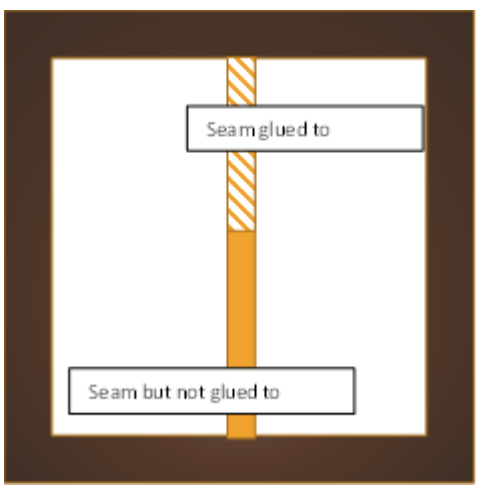

Figure 8 - Preparing Frame for Fabric Assembly

2) Fabric Panels

Because the most important part of the aircraft fabric covering system are the seams and joints, the test panels will be manufactured to include a seam and glue joint along the center of the test article. One half of the cross member in the frame will be a glued structure and one half will be a seam in the fabric but not glued to the cross member.

Using standard industry methods, cut sufficient fabric such that the wooden frame can be covered completely, including the wrap around the wooden frame and an overlap seam along the center support beam. The resulting seam overlap should be a minimum of approximately ½ inch.

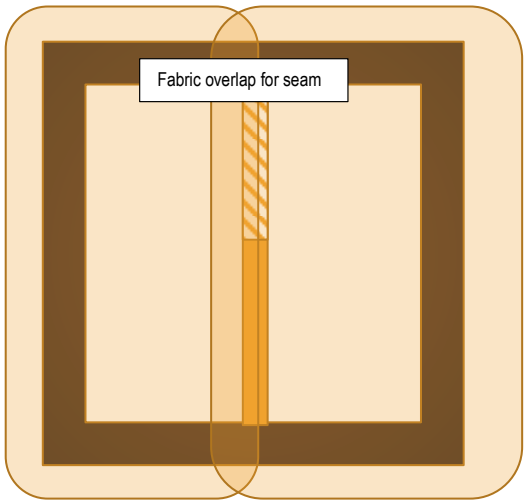

Figure 9 - Laying Fabric Over Frame with Overlap for Seam

3) Affixing Fabric

The following is a summary of the preparation. Be sure to follow recommended practices for the five systems.

- Poly-fiber is attached using a methyl ethyl ketone thinned vinyl adhesive, PolyTak. It evaporates quickly so work quickly to maximize the adhesion. Do not coat more of an area than you can get the fabric in place before it dries.
- Ceconite/Randolph – For both dope systems, using a 1" brush, liberally apply New Super Seam Fabric cement over the first area where fabric is to be attached. Apply the cement to small areas at a time. The cement will dry rapidly. Press the fabric into the wet cement being sure that it squeezes up through the weave of the fabric. Thoroughly work the cement into the fabric using your brush. Remember to only apply cement to as much an area as you can cover before it dries. The cement must be wet when you press the fabric into it.
- Superflite – Treat per manufacturer's instructions
- Stewart Systems – Lay the fabric over the dried adhesive, lightly rub the fabric into the dried adhesive, and use a 250° F iron run lightly over the adhesive areas, not to shrink or adhere the fabric, but just to hold the fabric in place.

4) Creating Seams

Place the non-stick material between where the seam is to be constructed but NOT stuck to the cross member. When constructing the seams the fabric should overlap across the cross member. Typically this results in a minimum of approximately ½ inch overlap.

- Poly-fiber, and Ceconite/Randolph - Liberally coat the two pieces of fabric that will be joined with cement only on the area where they are to be joined. Allow the cement to become a bit tacky to the touch. Next press the top piece of fabric into the bottom piece of fabric and work them into each other with a brush and your fingers.
- Superflite – Create seam per manufacturer's instructions.
- Stewart Systems - Brush a layer of adhesive over the top of the fabric that is going to be bottom layer of the seam. Make sure that there is sufficient glue to soak the fabric and let the glue dry.

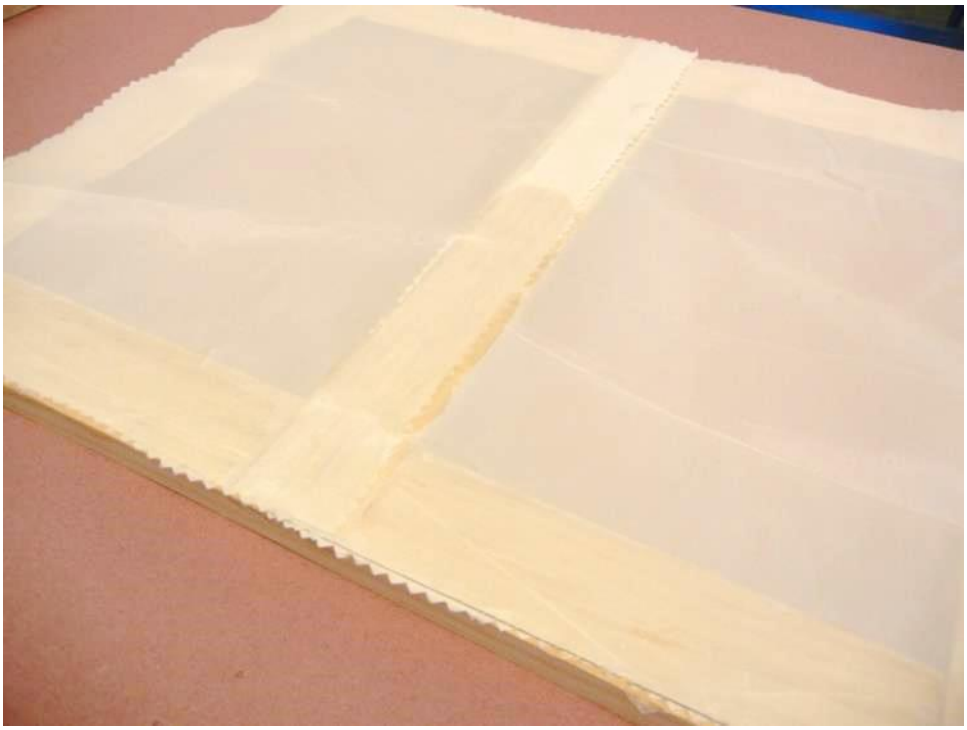

Figure 10 - Example Showing the Glued (bottom) and Unglued (top) Seams

5) Tautening the System

The following is a summary of the process. Once the glue joints have dried, the fabric systems are tautened. Be sure to follow recommended practices for the five systems.

- Poly-Fiber – Using an iron set to **350° F**, iron over the entire surface, EXCEPT the seams to tauten the surface. Wipe the entire surface with MEK to seal the weave of the fabric and let dry completely.
- Ceconite/Randolph – Using an iron set to **250°F**, iron over the entire surface, EXCEPT the seams to tauten the surface.
- Superflite – Using an iron set to **350° F**, iron over the entire surface to tauten the surface.
- Stewart Systems – Using an iron set to **250° F**, iron over the entire surface. Increase the iron to 300° F and iron over the entire surface. *Increase* the iron to **350° F** and repeat ironing again.

6) Sealing the System

Follow recommended practices for each of the five systems. Make sure to use all required personal protective equipment dictated for each system, up to and including the use of respirators and fresh air breathers.

Note that for the preparation of the test panels, no reinforcing tape will be installed on the seams. No paint system will be applied to the panels.

- Poly-Fiber – Brush on the first coat of Poly-Brush so that it is absorbed into the fabric but not so much it comes through. Allow to dry. Apply a total of **three** coats.
- Ceconite/Randolph – <u>Nitrate Dope</u>: Thin the dope 50-50 using nitrate thinner to assure it will penetrate the fabric. Use a high-quality bristle brush and brush on the first coat to totally encapsulate the fabric. Allow each coat to dry at least 30 minutes before applying succeeding coats. Apply **three** coats of nitrate dope.
- Ceconite/Randolph – <u>Butyrate Dope</u>: Thin the butyrate dope with butyrate thinner at a ratio of 1 part of thinner to 1 part of butyrate dope. Spray the first coat of butyrate on a full cross coat (2 coats) of thinned, non-tautening butyrate dope. After the first coat of butyrate dope has dried for at least 1 hour (this will depend upon temperature), spray on another coat of butyrate dope. Again, allow this coat to dry for at least 1 hour and then apply a **third** coat.
- Superflite – Prepare the two-part coating per manufacturer's instructions. Spray two cross coats onto the surface and allow to dry.
- Stewart Systems – Wipe down the surface of the fabric with cleaner followed by a rinse with clean water. Thoroughly mix the EkoFill and filter through a paint filter. Seal the fabric using EkoFill applied with a foam brush in one direction just to fill the weave. Allow to dry and

repeat with a second coat of EkoFill. Lightly sand the surface with 320 grit paper, blow off the surface, and spray a **third** coat of EkoFill.

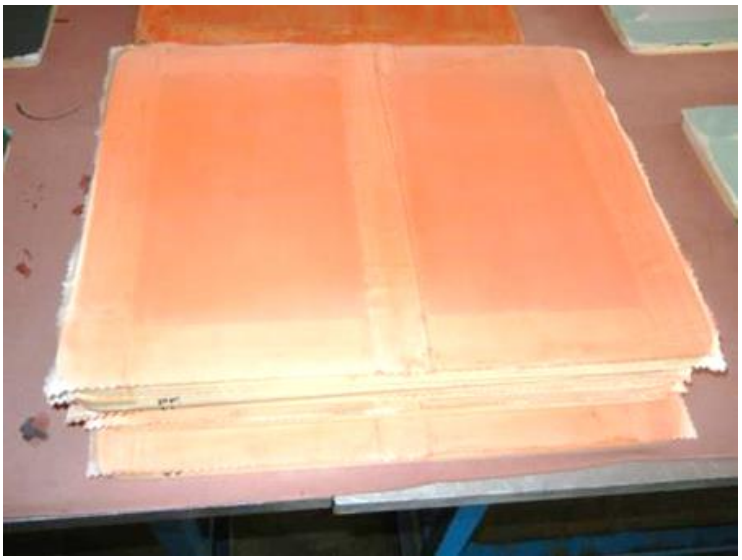

Figure 11 - Example of Finished Fabric System Frame (Poly-Fiber)

17.2. Test execution

17.2.1. Materials

1) Two each of each fabric system panels
2) Fuel reservoir, i.e., 1-pint metal cans with a narrow mouth
3) Cotton cloths
4) Vibrating cutter or other means of cutting the wooden support structure without damaging attached seam
5) Scalpel or other sharp blade for cutting out tensile strips

17.2.2. Specimen preparation

1) Clearly identify each sample frame as to system and fuel type. This identification should be visible after the test is underway.
2) After the test articles have thoroughly dried and cured, take one frame from each of the five systems and prepare tensile strips from the surface. Tensile strips should be cut from each of three regions; the open area, the seam area glued to the support structure, and the seam area not

glued to the support structure. Specimens should all be cut from the panel in the same direction. The seam should be roughly centered in the specimen. See Figure 12.

Cut the fabric free of the frame and carefully cut the support piece free, maintaining the adhesion between the seam and the cross support. Where the fabric/seam has been glued to the cross member, the cross member will be a part of the sample. Cut 1” x 6” strips parallel to the grain of the fabric and perpendicular to the manufactured seam, taking care not to unravel the edges. Cut through the support piece so that the glued structure remains attached (See Figure 13). This process will be repeated after testing on the exposed specimens.

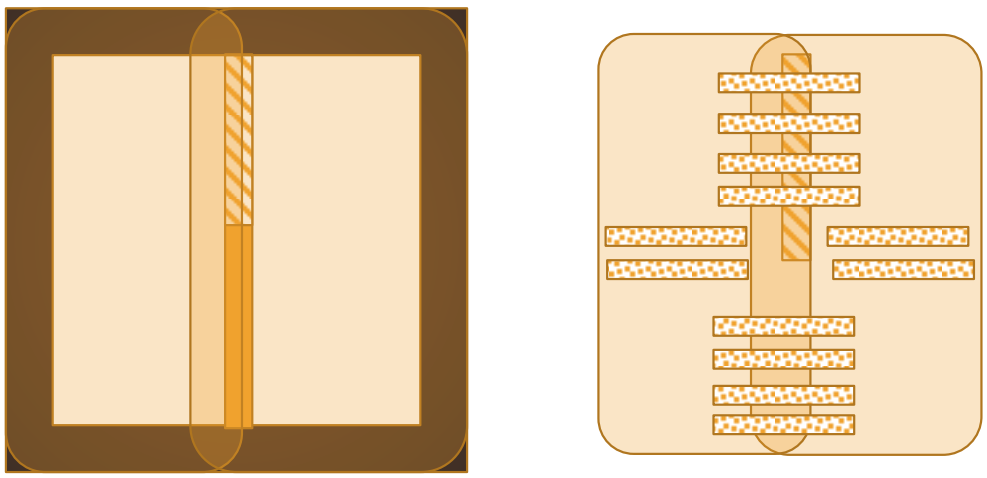

Figure 12 - Layout of Tensile Strips

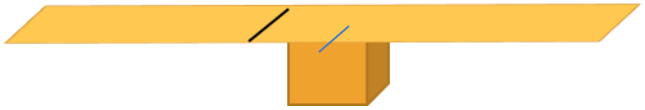

Figure 13 - Tensile Strip with Glued Support

3) Place each frame into the testing location in such a way as that the coated surface is horizontal and as much as possible, level.

    a. Space should be fitted with a means of collecting any spilled fuels

    b. Set up must allow access to the surface with the inverted fuel reservoir and cotton applicator towel without exposing non-target areas. There must be enough space to get the can and the towel onto the target test space without spilling fuel all over the sample surface. This will have to be done multiple times throughout the exposure.

17.2.3. Exposure

The following test method is developed from industry processes. No specification is available. For each fabric system, a series of pint cans, approximately ¼ to ½ full is inverted over a thickly folded, disposable cotton cloth. The can becomes a reservoir for the fluid and the cloth the means of continuously applying liquid to the surface of the fabric system without soaking the test article. Multiple cans will be inverted over multiple cloths to assure uniform exposure across the test surface. Make sure to have contact on the seam at both the glued and unglued region as well as the open spaces on both sides of the seam.

1) Exposing the Surface

    a. Fold a cotton towel in such a way as it is ¾ to an inch thick and approximately 3" x 3" in size. While this absolute size is not important, the size must be small enough that the area covered by the cotton cloth does not overlap adjacent test areas.

    b. Place the towel over the opening in the can, with the opening basically centered on the cloth.

    c. With the can/cloth over the target area, hold the cloth tightly to the opening, and in as close to a single motion as possible, invert the can and place it on the target area. Care must be taken to avoid spilling the can or splashing from the towel.

There are three target areas, an open area, away from the seam, the seam where it is glued to the frame, and the seam where it is not glued to the frame.

    d. At designated timed intervals, carefully lift the can/cloths from the surface of the frame and inspect.

2) Testing Crosslinking

Cross link testing involves taking the cotton cloth and rubbing the surface.

    a. Inspect both the cloth for removal of material and inspect the surface for bubbling, cracking or other delamination.

    b. Photograph the system and any observations at each inspection.

    c. Inspections are to be performed at 30 minutes, 60 minutes, 4 hours, 8 hours, 24 hours and 48 hours. **NOTE: Depending on the fuel volatility, it may be necessary to refill reservoirs more often than the inspection periods. The goal is to maintain a wetted surface throughout the testing.**

d. Return the cans and cloths after each inspection. If necessary, add additional test fluid to the can to maintain a liquid reservoir.

17.2.4. Post exposure measurements

Using the same procedure as provided in Section 17.2.2 to cut sets of 1” x 6” tensile strips from the frame, with the exception that three (minimum) strips are cut from BOTH open areas in addition to the two seam areas. The open area specimens will form **two** sets of samples: open area-exposed and open area-unexposed.

1) Tensile/elongation testing (both pre and post exposure)

Tensile testing is performed using a standard tensiometer. All of the tensile testing is done in English units (i.e., pounds force, inches). Set tensiometer cross head speed to 12” per minute.

Mount the specimen securely in the clamp of the testing machine. Take care that the specimen is centrally located and that the long dimension is as nearly parallel as possible to the direction of force application. Be sure that the tension on the specimen is uniform across the clamped width. If the fabric cannot be satisfactorily held in clamps, place each specimen around the pins and between the jaws as illustrated in, using jaw padding if necessary. Tighten the clamps to distribute the holding pressure along the clamping surface of the top jaw.

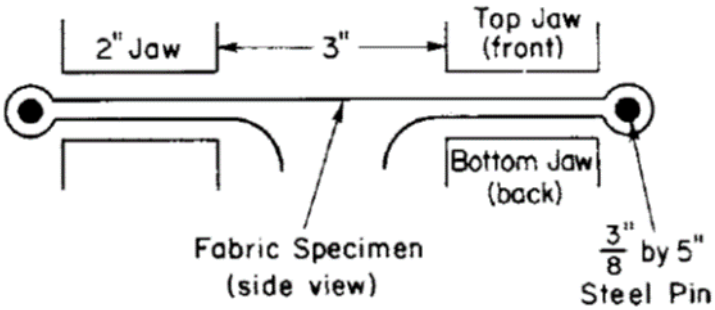

[1]Figure 14 - Wrapping Tensile Strips on Pins for Tensile Testing (ASTM D5035-11, Figure 1)

Elongation depends on the initial specimen length which is affected by any pretension applied in mounting the specimen in the testing machine. Mount the specimen in the upper clamp of the machine, and apply a uniform pretension, not to exceed 0.5 % of the full-scale force, to the bottom end of the specimen before gripping the specimen in the lower clamp.

---

[1] Reprinted, with permission, from ASTM D5035-11(2019), Standard Test Method for Breaking Force and Elongation of Textile Fabrics (Strip Method), copyright ASTM International. A copy of the complete standard may be obtained from www.astm.org

Mark across the specimen at the front inner edge of each jaw to check for specimen slippage. When slippage occurs, the mark will move away from the jaw edge. Operate the machine and break the specimen. If a specimen slips in the jaws or breaks at the edge of or in the jaws, or if for any reason the result falls markedly below the average of the set of specimens, discard the result and take another specimen. In the absence of other criteria for rejecting a jaw break, any break occurring within 5 mm (0.25 in.) of the jaws which results in a value below 50 % of the average of all the other breaks should be discarded. No other break should be discarded unless it is known to be faulty.

17.2.5. Calculations

Breaking Force—For each laboratory sample and testing condition, calculate the average of the breaking force observed for all acceptable specimens, that is, the maximum force exerted on the specimen as read directly from the testing machine indicating mechanism as pounds force.

Apparent Elongation—Measure the apparent elongation of acceptable specimens at the breaking force. Measure the increase in length from the start of the force-extension curve to a point corresponding with the breaking force, or other specified force, as shown on the autographic record. Calculate the apparent elongation as the percentage increase in length based on the gage length. Use of an extensiometer is acceptable.

$$Relative\ Elongation\ =\ ((Dt + Gage)/Gage) \times 100$$

Data is reported as a percent change between original values and final values for all of the measured data. All of the data is compared as a direct comparison of (post exposure value – original value) divided by original value, the quantity multiplied by 100.

18Test procedure – Task 7 distribution hose testing

18.1. Physical properties and adhesion

18.1.1. Materials

1) Five types of large distribution hoses, See Section 6.8.
2) ASTM D910 compliant aviation gasoline produced with high aromatic content
3) Candidate fuel(s)

18.1.2. Specimen preparation

18.1.3. Physical properties (density, volume, and hardness)

1) Prior to testing, ideally sections of inner liner material are removed by mechanically removing the inner liner layer from the hose carcass. This may be difficult to accomplish. One means is to slice sections of hose as narrow "donuts", cut down one side to generate a flat piece, and then filet the inner liner from the carcass with a sharp knife or razor, making every possible effort to procure a uniform specimen. Maintaining a uniform thickness should be attempted, however, small inconsistencies are acceptable. The goal is to generate test specimens ~1" x 1".

   By removing inner liner material, confounding of the physical properties, especially the density change by the other hose layers can be minimized. It is recognized that depending on the hose construction, removal of the inner liner layer may not be possible without unreasonable damage to the inner liner material. If it is not possible to prepare test specimens of reasonable size, specimens may be cut from fully constructed hose and used. Small specimens will be removed from the inner liner after exposure for density testing.

2) A minimum of three specimens per fuel type per hose type is required.

3) Label individual specimens with a unique identifier.

4) Photograph specimen sets.

5) Collect pre-exposure data. Measure length, width, and thickness of each individual specimen. If procurement of appropriate 1" x 1" specimens of inner liner only material proved problematic, measure the entire hose specimen thickness AND representative thickness of just the visible inner liner using a micrometer.

6) Measure the unexposed hardness. If a finished hose is being used, measure the hardness from the inner liner side.

7) Weigh each specimen in air and in water.

8) If finished hose specimens are to be used for testing, cut a small piece of inner liner only from an extraneous piece of hose. Use this inner liner only to determine the pre-exposure density.

18.1.4. Inner liner adhesion testing

1) Cut the hose into 1" wide sections, creating 'donuts.'

2) Cut each donut down the side, generating strips 1” wide. Each strip is a specimen. See ASTM D413 Type A.

3) A minimum of three specimens per fuel type per hose type, plus three additional specimens for baseline measurements are required.

4) Label individual specimens with a unique identifier.

5) Photograph specimen sets.

6) Collect pre-exposure adhesion data.

18.1.5. Exposure

1) Array the specimens in sample jars in a manner that avoids specimen to specimen contact of the test regions. All specimens may be placed in a single jar, or the property change specimens and the adhesion test specimens may be placed into separate jars as space permits. It is also permissible to test physical property changes and adhesion changes as entirely separate experiments.

Two jars will be prepared for each hose type, one with 100LL and one the test fuel. Each additional test fuel will be an additional jar.

2) Fill the jars to ~85% volume fill and seal.

3) Place jars in any required safety containment, vent evolved vapors as required by local regulations, and place the samples into the test chamber, stabilized at 71 °C (160 °F).

4) Expose the specimens at temperature for 28 days. Periodically confirm sample jar fill and top off as necessary. No fuel swaps are required during the 28 days.

18.1.6. Post exposure measurements

1) The volume change specimens are removed from the test fluid, rinsed with acetone, ethanol, or methanol if necessary, and blotted dry with a lint free cloth.

2) Measure the width, length, and thickness of each specimen. If the specimen is a finished hose, also measure the thickness of the inner liner only layer with a micrometer.

3) Weigh each specimen in air and in water. **NOTE: The weight may continue to change as fuel evaporates from the interior of the specimen. Record the highest weight as soon as the weight stabilizes enough to read.**

4) Measure the hardness from the inner liner side.

5) If necessary, cut a piece from the inner liner only and determine the inner liner density. Do not remove material until AFTER weighing the specimens.

6) Photograph specimens under the same conditions as the pre-exposure photographs.

7) The adhesion specimens are removed from the test fluid and rinsed with acetone if necessary. Blot dry with a lint-free cloth.

8) Adhesion of the inner liner is determined using ASTM D413. Measure the width of the strip to the nearest 0.01" (0.2mm) and record. During the test, there needs to be enough of the ply separated from the hose assembly to provide enough material to be gripped reliably in the tensiometer grip. All of the layers of the specimen except the inner liner layer must be placed into upper grip in such a way that the entire end is held squarely and there is no uneven stress applied to the specimen when force is applied. The inner liner ply that is separated from the hose assembly is inserted into the lower grip, making sure that it is gripped evenly. Confirm that there is no twisting to any of the layers and it is gripped in such a way that when the force is applied it is done so evenly and at 180° to the layers (See

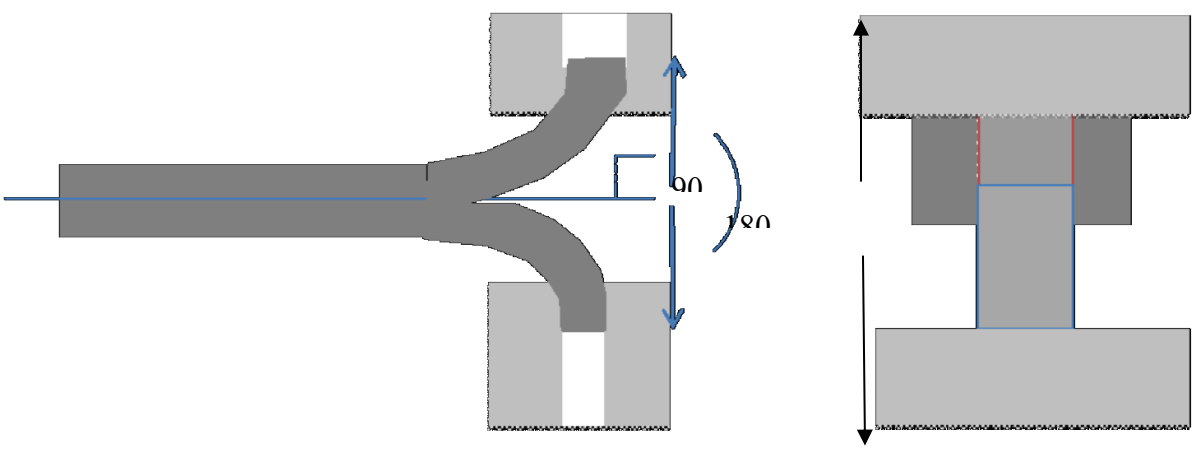

Figure 15 - Set up of Adhesion Test in Grips

9) The crosshead speed for the test is 2"/min (0.8 mm/s) see D413, §8.2.5.

10) If one of the substrate rubbers repeatedly tears instead of separating from the substrate, the average load at which the tearing of the rubber occurs is taken as the result.

18.1.7. Calculations

1) Change in volume is calculated preferably by ASTM D471 §18.2 in revision16a, based on the change in mass, or by ASTM D471, §13.3 based on change in dimension.

$$\Delta V, \% = \frac{(M3 - M1)}{d(M1 - M2)} * 100, where\ d = density\ of\ the\ immersion\ liquid$$

Or

$$\Delta V, \% = \frac{(M3 - M4) - (M1 - M2)}{(M1 - M2)}\ x\ 100$$

Equation 19 – Determining Volume Change by Mass

Where: M1 = initial mass in air

M2 = initial mass in water

M3 = mass in air after exposure

M4 = mass in water after exposure

If determining the volume change by change in dimension, determine the percent change based on the formula

$$\Delta V, \% = \frac{V - Vo}{Vo} * 100, \quad where\ V = L\ x\ W\ x\ T\ and\ Vo\ is\ the\ original\ volume$$

Equation 20 – Determining Volume Change by Mass

2) Change in hardness is calculated by the equation

$$\Delta H\ \% = \frac{(H - H_o)}{H_o} * 100$$

Where H_o = original hardness

H = hardness after immersion

Similarly, change in weight and change in density are calculated the same way, replacing density or weight for hardness in the above equation.

Test results shall be reported as the average values of the specimens. All of the measured values shall be used unless a specific, definable reason for excluding a value is identified and documented.

3) Adhesion strength is the average between the minimum and maximum force value indicated. The force so indicated, expressed in pounds force per inch is divided by the width measured.

$$Adhesion\ strength = \frac{N}{M}\left(\frac{lbF}{in}\right) = \frac{force}{actual\ width}$$

Equation 21 Determining Adhesion Strength

18.2. 16 week static exposure and proof pressure testing

18.2.1. Materials

1) Five types of large distribution hoses see Section 6.8, at least 2' in length and fitted with appropriate end fittings and caps, appropriate for sealing the hose, and for attaching pressure connections during proof pressure testing.

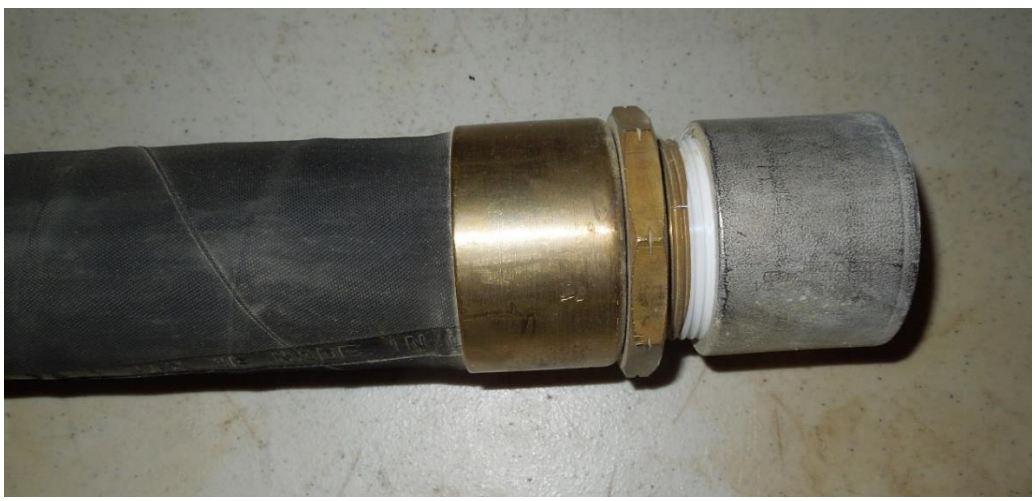

Figure 16 - Example of fitting and cap

2) ASTM D910 compliant aviation gasoline produced with high aromatic content

3) Candidate fuel(s)

18.2.2. Specimen preparation

1) Each individual hose specimen shall be fitted with appropriate fittings installed to industry accepted quality. These fittings must provide positive seal and leak proof closure for the 16 weeks of testing and the proof pressure testing at the conclusion of the test. One hose per fuel per hose type is required.

2) Label each individual hose specimen with a unique identifier.

3) Photograph each hose, each end and a representative of the hose surface.

4) No other pre-exposure data is required.

18.2.3. Exposure

1) Confirm one end of the hose is fully closed.
2) Fill the hose to the base of the hose fitting, being careful to avoid spilling fuel on the hose exterior. Confirm that the hose is fuel and there are no air bubbles trapped inside the hose specimen.
3) Cap and seal the hose.
4) Wipe down the surface of any spilled fuel.
5) Apply a layer of talc or other leak indicating material to the entire surface of the hose.
6) Weigh each filled hose.
7) Hang hoses in such a manner as they are not kinked or otherwise distorted and are hanging over a catch basin which permits visual inspection for leaks. A layer of talc has proven successful in providing visual indications of leaking, even if the leaked fuel has evaporated.
8) Store at ambient temperature for 16 weeks.
    a. Inspect the specimens every 24 -48 hours for signs of leakage or other forms of failure. **NOTE: It is permissible to tighten fittings during the first 24 hours should leaks be identified due to the caps and continue testing. If leaks from the caps/fittings do not respond to mechanical adjustments, the hose specimen shall be replaced.**
    b. Once per week confirm continued fuel fill by heft/weight. If necessary, refill the hoses as above and note the amount of fuel required to top off the hoses.
    c. Record any observations such as leaks, weeps, permeation, softening/stickiness to the hose surface. Photograph any obvious leaks or other probative events.

18.2.4. Post exposure measurements

18.2.5. Visual inspections

1) After 16 weeks, photograph each hose.
2) Wipe any dirt, debris, or other surface materials away from the hose end.
3) Open the hose end and collect the fluid remaining in the hose into a clean, labeled sample container. Note any observations related to color, odor change, observation of debris, etc.

4) Inspect the hoses, specifically the interior and the fittings for evidence of fluid attack. Indications include but are not limited to delamination of the rubber interior/exterior, cracking, corrosion to fittings, attack of the gaskets/seals in the fitting, distortion of the hose, a relative increase/decrease in hose flexibility and hardness, and appearance of changes to the inner diameter of the hose.

18.2.6. Perform hydrostatic proof pressure testing

Each hose is to be hydrostatically proof pressure tested per ASTM D380, §14. In general, the following process is used. All testing must be in compliance with local and site safety regulations. Large hoses when pressurized can become destructive in the case of a hose failure. Use of hydrostatic testing helps reduce the risk.

1) Mark each hose with markings or tapes per ASTM D380. Use of masking tape around the end just at the fitting and at regular intervals along the hose, facilitates observing fitting slippage, hose expansion, or other deformations during the proof pressure test.
2) Fill each hose specimen with water, confirming all air is removed.
3) Connect the hose to a pneumatic pressure line, with an isolation valve between the hydraulic and pneumatic sections of the hose.
4) The pneumatic pressurizing section shall include a calibrated pressure regulator and a pressure bleed valve to restrict the flow output of the regulator in the event of hose failure.
5) Pressurize the hose to 600 psi at approximately 1000 psi/minute.
6) Once the proof pressure is reached, allow the hose to hold at this pressure for 10 minutes.
7) Record indications of leaks, deformations, bursting, or other forms of failure.
8) At the end of 10 minutes, release the pressure, remove the hose from the test fixture, and inspect for leaks, seeps, slippage of the ends, and internal condition of the hoses. Photograph any indications of issues.

19Test procedure – Task 8 composite testing

Unlike most aviation metals, there are few standard composite material formulations. Composites can vary in fiber type, fiber sizing, core material, resin type, curing agents, toughening agents, fillers, and other modifiers. There are literally thousands of composite materials in use, and their resistance to a particular chemical can vary greatly among them. It is impractical to evaluate each proposed fuel

against every composite material combination, so a smaller test group of representative materials is used.

The resins and not the fiber is the primary concern for fuel compatibility. The most commonly used aviation fibers are E-glass (electrical glass), S-glass (higher silica content than E-glass), and carbon fiber. While some fibers have surface treatments to modify the bonding of the resin to the fiber, these surface modifiers are also not being specifically evaluated as they are company specific, often proprietary, and are considered subordinate to the resin systems themselves.

Because the production of finished composite structures is a specialized skill, and resource intensive activity, the testing is presented as a two-step process. Neat resins and prepregs are prepared for initial screening using changes in weight, density, and glass transition temperature. Observations of statistically different responses between materials exposed to 100LL, Reference Fuel B, and the test fuel(s) may be used to identify obvious incompatibility, thus minimizing further testing before expending the effort to prepare finished composite specimens. Only those materials which fail will be required to move on to finished composite structure testing.

Within the list of materials found in Appendix I, there are generally three types of major types of resins, Bis-phenol A epoxy, Bis-phenol F epoxy, and vinyl epoxy. Other specialty resins such as vinyl ester identified by individual manufacturers have also been considered and where practical are included. It is recognized that individual manufacturers have proprietary differences in the specific formulations of the resins within a group. If the performance of all resins within a type of resin are statistically similar, then only one of each, denoted by green highlighting will require additional constructed testing. If, however, one of the formulas within a type is statistically less resistant than the green materials and greater than 10% degradation, that individual resin will also move to full structural testing.

Following the screening tests of the neat resins and adhesives, structural testing of finished composites is required. Specimens prepared to airworthy standards are tested for changes in weight, hardness, tensile/elongation, V-notch shear strength, and short beam strength. Adhesives are prepared for lap-shear joint strength using finished composite laminates.

19.1. Composite resin screening test

This document provides general guidance on the execution of screening testing using neat resins and prepregs, prepared for determination of glass transition temperature. It is assumed that the researcher is or has access to experts in the preparation of samples for T_g testing. The use of dynamic mechanical analysis (DMA) is recommended due to its sensitivity and repeatability, both important to the evaluation of the screening data. In general, testing has successfully been done with these materials

using 1 hertz, and a heat ramp of 2 to 5°K (°C)/min. Specimens of 1.5 to 2 mm thick are common. The range of T_g observed for these materials are from 65 to 210 °C.

19.1.1. Materials

1) Resin materials as described in Appendix I
2) Prepreg materials as described in Appendix I
3) ASTM D910 compliant aviation gasoline produced with the high aromatic content
4) Candidate fuel(s)
5) Reference Fuel B conforming to ASTM D471

19.1.2. Specimen preparation

1) Prepare test coupons appropriate in size and shape for the test equipment being used.
    a. Mix resins per manufacturer's instructions.
    b. Cure materials (neat resins and prepregs) per manufacturer's instruction. **NOTE: Temperature and relative humidity impact the physical properties of composite resins. Different materials will have different recommended cures, post-cures, and conditioning. All specimens within a sample set shall be handled in the exact same manner to minimize data variability.** It is recommended that specimens be stored in a controlled location, such as a desiccator, prior to fluid exposure. The baseline, unexposed data shall be collected on specimens handled and stored under the same conditions as those exposed to the test fluids.
    c. Sample sets shall be comprised of a minimum of three individual specimens. If practical, sample sets of five are preferable.
    d. When preparing specimens, also prepare sufficient specimens of a 1"x1" or similar, to permit determining weight and density change IMMEDIATELY after removal from the test fluid. Minimizing time between exposure end and test execution makes the use of the DMA specimens for weight/density change problematic.
2) Photograph specimens.
3) Array specimens into sample jars in such a way as to minimize specimen to specimen contact.

19.1.3. Exposure

Expose individual sample sets to Reference Fuel B, 100LL, test fuel(s), and air (unexposed specimens) for five (5) days at 60 °C (140 °F).

19.1.4. Post exposure measurements

1) Immediately after removal from the test fluid, reweigh, determine change in density, and measure T_g.
2) Visually inspect specimens for changes and differences.
3) Compare the amount of change in properties from unexposed between the three fluid exposures.
4) If the median amount of change in properties, between the sample sets is statistically different and greater than exposure to 100LL, the test material is considered compromised, and further testing is required.
    a. If results from exposure to 100LL is greater than 10% and test fluid results are comparable to the 100LL results, accept 100LL values as acceptable and do not consider the material compromised..
    b. Within a class of resin types, i.e., Bis A, or Bis F, for results that are less than 10% (not compromised), compare the results to Hexion MGS (Bis A), or Hexion 8014 and Derakane (Bis F).
        i. If the results in the test fluid are less than 10% (not compromised) but more than the Hexion/Derakane results, the resin with the greatest amount of change will require finished composite testing. Only the "worst" **un**compromised resin as compared to Hexion/Derakane needs finished composite testing.
        ii. Hexion L285 with H285, Hexion L285 with H285, Hexion 8014 with TETA, and Dow Derakane 470-350 SHALL have finished composite testing.

19.2. Properties testing – finished composites

19.2.1. Materials

1) Any of the resin materials which were compromised during the screening testing AND:
    a. Hexion L285 with H285
    b. Hexion L285 with H285

c. Hexion 8014 with TETA

d. Dow Derakane 470-350

e. Worst performing, **un**compromised resin from both classes (Bis A, Bis F). If the worst performing resin is a -d above, there will be four resin systems. There could be up to six.

2) E-glass fiberglass fabric sufficient for production of test specimens from the remaining resins and the non-toughened prepreg (if compromised in screening testing)

3) Carbon fiber fabric sufficient for production of test specimens prepared from toughened prepreg (if compromised in screening testing)

4) ASTM D910 compliant aviation gasoline produced with the high aromatic content

5) Candidate fuel(s)

6) Sufficient Toray Advanced Composites BT250E-1 prepreg on E-glass to produce test panels for use in sealant peel testing (see Section 14.3.1)

19.2.2. Specimen preparation

While this document provides general guidance on the production and testing of samples specific to this project, it is assumed that the researcher is familiar with or has access to experts in the preparation, execution, and finishing of composite systems. The researcher should have a location suitable for the preparation and curing of composite structures, including space, access to materials and control of airborne particulates. While this document will provide information specific to the building of the test articles for this test protocol, it will not provide step by step instructions in the individual systems. ASTM D5687, Preparation of Flat Composite Panels with Processing Guidelines for Specimen Preparation may be used as a guide. All processes and procedures employed for the production of an airworthy composite structure are assumed in the production of the following test articles. Make sure to use all necessary personal protective equipment.

19.2.3. Test panels lay-up

The area in which the samples are to be built does not need to be of a clean room designation; however it is expected that the room will be clean enough to provide a dust-free area for lay-up and that the build-up area will be free of residue dust and debris. Similarly, care must be taken to avoid contamination of the surfaces via handling, i.e., by hand cream, dusted gloves, fabric softeners, etc.

When laying out the laminate, provide sufficient excess (15mm works well) around the edges for removal. This helps assure the test specimens are of a uniform matrix/fiber ratio that may not be represented closer to the edges. Also consider the material which will be lost during the machining to remove the edges and to cut the specimens apart. It is also important to consider the limitations of other equipment to be used such as the oven or autoclave when laying out the dimensions of each laminate. Ideally, all specimens for a single test should be prepared from one laminate; however, if this is not possible, make multiple laminates from the same batches of material at the same time to minimize variables in the final specimens and randomize the specimens across the multiple laminates.

For wet lay-ups, prepare the fabric by cutting to size in such a way as to minimize pulling or distortion of the fabric. It is permissible to stack oversized pieces into a ply stack and then trim the ply stack to size. Follow standard industry practices for aligning the fibers, setting up for joints, and for assuring alignment during stacking. Avoid causing bubbles between plies. A roller or spatula may be used to get good contact between the plies. Place identification on the ply stack after stacking is complete. One way to do this is to scribe the identification on a piece of aluminum tape or foil placed on the corner of the stack. Protect surfaces from contamination and dust between operations.

As the laminate thickness increases, the laminate should be debulked at least once for every 2.5mm of thickness. Standard industry practices for the control of matrix flow in both the vertical and lateral directions are expected to be employed and may include dams, control cloths, bleeders, and vacuum bagging. Remember that any cloths placed on the surface will create a texture, so must be applied evenly to avoid variations in the thickness of the laminate.

During the laminate consolidation, the recommended conditions will be those provided by the manufacturers of each of the target systems. This information includes data on any pressure that is necessary, vacuum and heat that needs to be applied, etc. The researcher should keep records on the specific conditions employed for each system. Pressure platens should be parallel to a sufficient tolerance to produce satisfactory laminates. Pressure application should occur within ½ minute of the time indicated by a particular consolidation cycle and remain within 5% of the indicated pressure throughout the cycle.

For laminates requiring a temperature cure, the temperature should be measured at or near the laminate. The temperature tolerance should be +/-2° C. Autoclaves should not be opened above 90° C. Vacuum is not required but if it is used, vacuum integrity should be monitored and considered compromised if the vacuum during a hold step declines more than 3.5 kPa in any 5-minute period.

19.2.4. Laminating resin coupon construction

It is expected the researcher has expertise or access to experts in the standard wet lay-up processes. The researcher is expected to provide a full description of the method to be used including but not limited to the number of plies, the method of debulking, cure times and temperatures, any vacuum bagging, ply orientation, and any release treatments or plies.

Coupons for all tests except lap shear adhesion must be constructed from each of the following laminate systems:

- Hexion MGS 285 on E-glass using a fast cure
- Hexion MGS 285 on E-glass using a slow cure
- Hexion Formulation 8014 on E-glass
- Derakane 470-350 on E-glass
- Any additional resin systems identified during the pre-screening as being less resistant than the above systems by not clearly compromised, prepared on E-glass

19.2.5. Prepreg coupon construction

It is expected the researcher has expertise or access to experts in the standard prepreg construction process. The researcher is expected to provide a full description of the method to be used including but not limited to the number of plies, cure times and temperatures, any vacuum bagging, ply orientation, and any release agents.

For prepreg failing screening testing, coupons for all tests including lap shear adhesion, must be constructed from each of the following laminate systems. It is also necessary to produce panels from the Toray Advanced Composites BT250E-1 on E-glass for use in Section 14.3, Sealant testing. For prepregs passing screening testing, only lap shear adhesion specimens are required.

- Toray Advanced Composites BT250E-1 prepreg on E-Glass
- ACG MTM 45-1 prepreg on Carbon
- Toray Advanced 2510 Prepreg (unidirectional) on E-glass

19.2.6. Adhesive joint coupon construction

Adherend thicknesses and joint overlaps must be chosen so that failure occurs preferentially in the joint and not in the substrate. Thicker adherends allow the stress on the bonded area to be increased, before either tensile failure or yield occurs in the adherend. Recognize, however, that depending on the surface

treatment and adhesive used, the bond strength may often be greater than the tensile yield strength of the adherend.

For these tests, prepare the systems as follows:

- Hysol EA 9360 adhesive samples using laminates constructed from ACG MTM 45-1 carbon prepreg
- PTM-W ES6292 adhesive samples using laminates constructed from Toray Advanced Composites BT250E-1 E-glass prepreg

19.2.7. Surface preparation

The surface preparation used on the adherend depends on the laminate adherend. Use the following surface treatments to prepare the bonding areas of plastic adherends for adhesive test specimens.

Solvent Wiping— Wipe the bonding surface of each adherend with three successive portions of a clean solvent dampened cloth. Use a fresh portion of cloth and fresh solvent for each wipe. Do not dampen the cloth by placing it in contact with the mouth of the bottle, but by pouring a small amount of solvent onto the cloth. Allow the adherends to stand in a clean, dust-free area with bonding surfaces upwards for 20 min to allow evaporation of solvents or condensed humidity.

Sanding—Sand the bonding surfaces of the adherends with fine-grit sandpaper or emery cloth until no evidence of surface gloss is visible. Sanding is desirable in many instances to remove the surface of plastic that may have contaminants, i.e., mold release. Roughing due to sanding may also increase the effective bonding area. Wipe with a clean dry cloth to remove particles from the sanding. Bond the surface as soon after preparation as possible.

19.2.8. Adhesive preparation

To prepare the adhesives, place an empty mixing cup on the balance and tare. Dispense approximate amount needed of part of base resin (part A) into mixing cup. Weigh and calculate amount of curing agent (part B) and either set balance to that amount or calculate the final balance value that achieves this (Resin + required Curing agent = target mass). Add appropriate amount of curing agent to mixing cup. Remove cup from balance and mix thoroughly by hand. Mix until a homogeneous appearance is achieved and no swirls or contrasting colors or consistency are visible or present in the cup. This is usually achieved after 3-4 minutes of mixing. Pay special attention to the sidewalls and bottom of cup. A flat utensil is recommended for mixing.

Dispense mixture into a new mixing cup by thoroughly scraping the adhesive mass from the cup with the mixing spatula and continue mixing with a new utensil. This is commonly called double-cupping

and aids in the mixing of any residual base constituents left on the walls of the first mixing cup. Mixing is complete after this step. Confirm there is a homogeneous appearance. Fully mixed adhesive should have no swirls or color variations.

Adhesive should be applied within 30-45 minutes after mixing is complete. Because pot life differs from adhesive to adhesive, consult the manufacturer's specification concerning usable pot life of adhesive after mixing.

Hysol EA 9360

Hysol EA 9360 is a two-component mixed adhesive. Just prior to application, combine the two parts by weight (100 parts resin to 43 parts curing agent) and mix thoroughly. There will be heat build-up during the blending which may continue after mixing is complete. Because of this heat build-up, do not mix in quantities greater than 450 grams, as dangerous heat build-up can cause uncontrolled thermal decomposition of the adhesive. This decomposition will generate **TOXIC FUMES**. Pot life for 200 grams is approximately 50 minutes at 77°F (25° C)

Note that the product is available in dual cartridge packaging.

PTM-W ES6292

PTM-W ES6292 is a two-component mixed adhesive. Just prior to application, combine the two parts by weight (100 parts base resin to 31.5 parts curing agent) and mix thoroughly. Pot life is approximately 40 minutes at 77°F (25° C).

19.2.9. Apply adhesive

It is recommended that test specimens be made up from a single laminate in multiples of at least five specimens, and then cut into individual test specimens. Cut sheets of the laminates to suitable size. All edges of the panels and specimens which will be within (or which will bound) the lap joints shall be machined true (without burrs or bevels and at right angles to faces) and smooth before the panels are surface-treated and bonded. Clean and dry the sheets carefully, according to the procedure prescribed by the manufacturer of the adhesive and assemble in pairs. Prepare and apply the adhesive according to the recommendations of the manufacturer of the adhesive.

Apply the adhesive to a sufficient length in the area across the end of one or both metal sheets so that the adhesive will cover a space approximately 6 mm (1⁄4 in.) longer than the ½" overlap. Assemble the sheets so that they will be held rigidly so that the length of the overlap will be controlled, within 0.25 mm (+/- 0.01 in.), and the adhesive allowed to cure as prescribed by the manufacturer of the adhesive.

Hysol EA 6390 is applied, and parts held in contact 24 hours at 77°F (25° C). Curing will continue 5 to 7 days at 77°F to normal performance. Area clean up: Hysol EA 6390 must be cleaned before it hardens. The uncured adhesive can be removed with denatured alcohol or MEK.

PTM-W ES6292 is applied, and the parts held in contact for 4 to 12 hours at 77°F (25° C). Cure time at 77°F is 18-24 hours. Area clean up: PTM-W ES6292 must be cleaned before it hardens. The uncured adhesive can be removed with denatured alcohol or MEK.

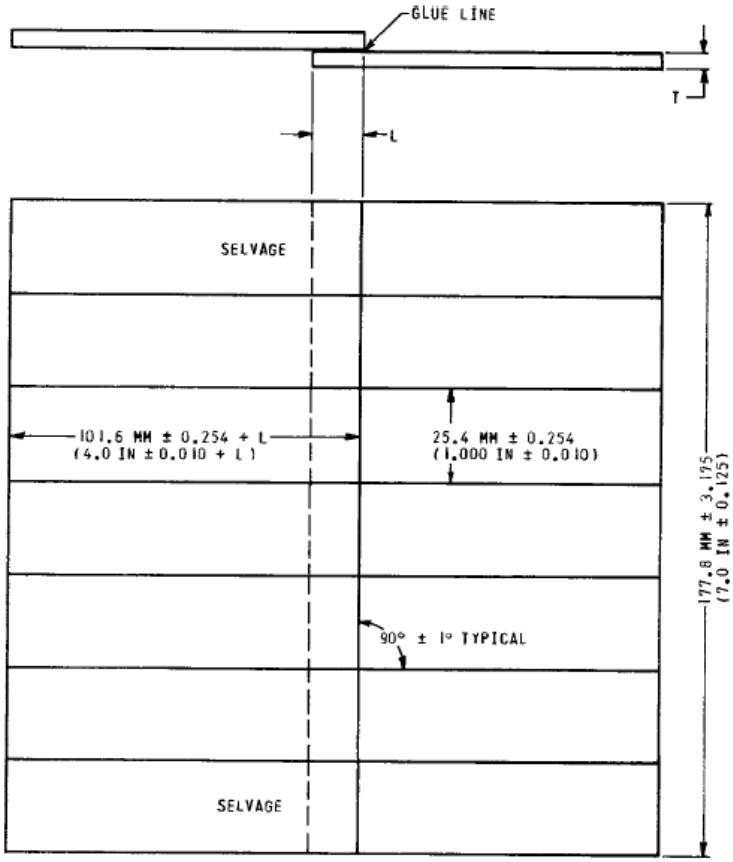

FIG. 1 Standard Test Panel and Specimen Configuration

[2]Figure 17 - Standard Adhesive Test Panel (ASTM D3163-01, Figure 1)

[2] Reprinted, with permission, from ASTM D3163-01(2023), Standard Test Method for Determining Strength of Adhesively Bonded Rigid Plastic Lap-Shear Joints in Shear by Tension Loading, copyright ASTM International. A copy of the complete standard may be obtained from www.astm.org

19.2.10. Cutting laminates into specimens

When cutting the specimens from the laminate, it is recommended that the outer ½" edges be machined off the laminate to remove non-representative material. The fiber orientation of the specimens needs to be maintained so orientation should be marked or otherwise maintained as it was during the preparation of the laminate. Initial cutting of laminates is typically done using a rough-cut abrasive grit band saw, a water jet, or a fluid cooled diamond saw. If the cut edge tapers more than 0.015m/m of specimen length or shows more than 0.2 cracks/mm at a magnification of 50x, subsequent surface preparation will be necessary. Specimens prepared from carbon fiber should be sandwiched between two layers of Plexiglas during the machining step.

For this program the specimens required are shown below. Suggested coupon count assuming serial testing of fluid samples is shown in parentheses. See below for test specific information on size and shape of samples.

- ASTM D3039 Straight-sided rectangular tensile coupons, including tabs as necessary (25 specimens)
- ASTM D2344 Short-Beam Strength of Polymer Matrix Composite Materials and Their Laminates (25 specimens)
- D5379 Shear Properties of Composite Materials by the V-Notched Beam Method (25 specimens)
- ASTM D3163 Determining Strength of Adhesively Bonded Rigid Plastic Lap-Shear Joints in Shear by Tension Loading (25 specimens)
- Traveler coupons (10 specimens)

General guidelines for the final machining of the specimens: The tool should have a fine grit, be hardened, be run at a high tool speed without wobble and be able to slowly move across or through the laminate. A single pass of the blade through the cut may be required due to the following conditions:

- the laminate shows greater than 0.025 mm taper of the cut edge through the thickness of the laminate.
- the laminate has an unsupported section (such as a tabbed tensile panel) which tends to bend to the table during cutting.

If the edges of the specimens show tapering [greater than 8mm taper per 1m of edge length] i.e., the edge is crooked, fiber pullout i.e., there are small holes where fibers are gone or little fibers sticking

out of the edge, or there is microcracking along the edge, then surface grinding should be the final surface edge preparation.

Figure 18 - Example of Edges Needing Surface Grinding

19.2.11. Labeling specimens

During the production of the specimens, make sure to mark each individual coupon with the appropriate notation of orientation as well as the part identification. Whatever method is used, make sure it does not affect or otherwise influence the subsequent testing and that it is not removed by exposure testing.

19.2.12. Adding bonded tabs to specimens

To apply tabs to the specimens, the cure of the adhesive should be evaluated to determine if it is compatible with the composite system and the tab material (if different). The pressures and temperatures used during the adhesive cure should be controlled to within 5% and +/- 2° C. If possible, the adhesive cure temperature should not exceed 80% of the laminate matrix glass transition temperature (T_g) for thermosets and should not further cure the specimen unless that is one of the goals.

It is recommended that adhesive and tabbing material shear strength be such that the shear failure load of the tab exceeds the specimen failure load. This may determine the tabbing area and the gripping apparatus required. If during test there are frequent failures, then the tabbing or adhesive material strength must be improved. Machining of the tab is permitted to obtain the necessary geometry for the test.

The adhesive needs to make thorough contact with the specimen and tab. This can be improved with appropriate surface preparation. The surface needs to be rough enough to support adhesive bonding without interfering with the contact between the two surfaces. Using a peel ply during the laminate preparation will provide a surface texture conducive to adhesive bonding with no further preparation. To protect the surface from contamination, do not remove the peel ply until ready to bond the tabs. Otherwise use a fine grit to abrade the surface, taking care not to damage the laminate reinforcement. If you see a color change in the dust, you have probably gone too far. After abrading the surface, the laminate should be cleaned with solvent such as MEK that removes particulates but does not affect the laminate surface.

A chemical surface treatment can be used to facilitate bonding as long as the laminate structure is not affected.

If tabs are made from a different material (including weave) than the laminate, care should be taken that the thermal expansion difference between the materials does not introduce stress concentrations during the adhesive cure. It is permissible for adhesive to be in the specimen gage area, but it must not affect the test.

Ideally the tabbed specimens should show symmetry (thickness of one side being within 0.5 mm of the other side) through the mid-ply of the specimen.

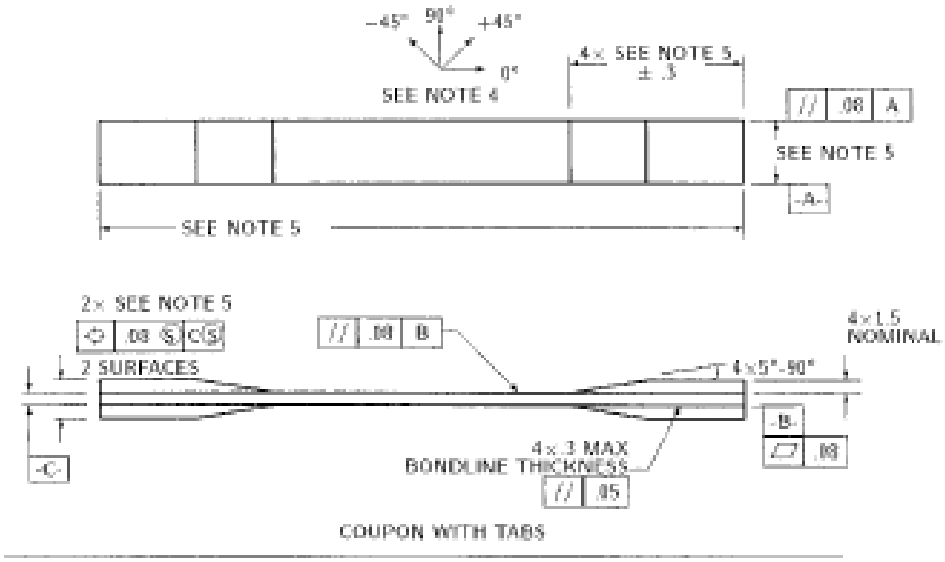

[3]Figure 19 - Example of a Tabbed Tensile Coupon (ASTM D3039-17, Figure 2)

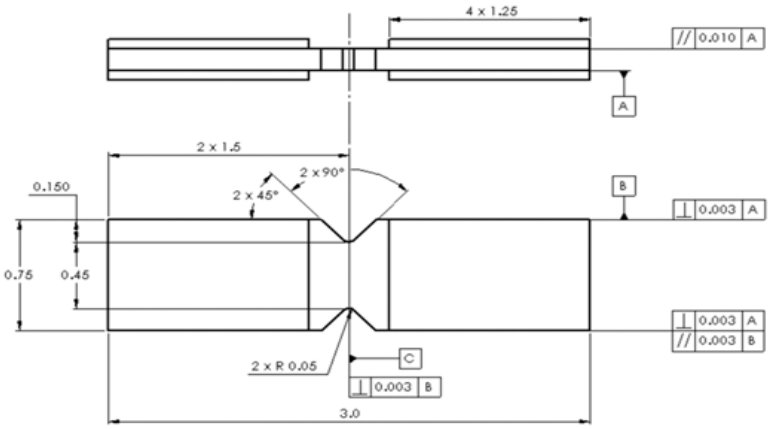

[4]Figure 20 - Example of a Tabbed V-Notch Coupon (ASTM D5379-19, Figure 8)

---

[3] Reprinted, with permission, from ASTM D3039-17, Standard Test Method for Tensile Properties of Polymer Matrix Composite Materials, copyright ASTM International. A copy of the complete standard may be obtained from www.astm.org

[4] Reprinted, with permission from ASTM D5379-19, Standard Test Method for Shear Properties of Composite Materials by the V-Notched Beam Method, copyright ASTM International. A copy of the complete standard may be obtained from www.astm.org

19.2.13. Traveler coupons

In addition to the specimen coupons described below, it is recommended a number of "traveler" coupons be prepared which can be used for dimensional change analysis, weight change, density, and hardness measurements. These coupons should be 1" x 3". Three per exposure test are recommended; 40 specimens for serial testing.

19.2.14. Rectangular tensile coupons

The required specimens for the tensile test consist of a rectangular coupon, 2.54 cm x 25.4 cm (1" x 10") with bonded tabs to facilitate testing. ASTM D3039 may be used as a guide for proper construction and assembly. See Figure 21, an example engineering drawing reproduced from ASTM D3039.

Five test coupons are required for each test fluid and corresponding baseline (ten per set if run serially) plus a minimum of five for baseline property determination.

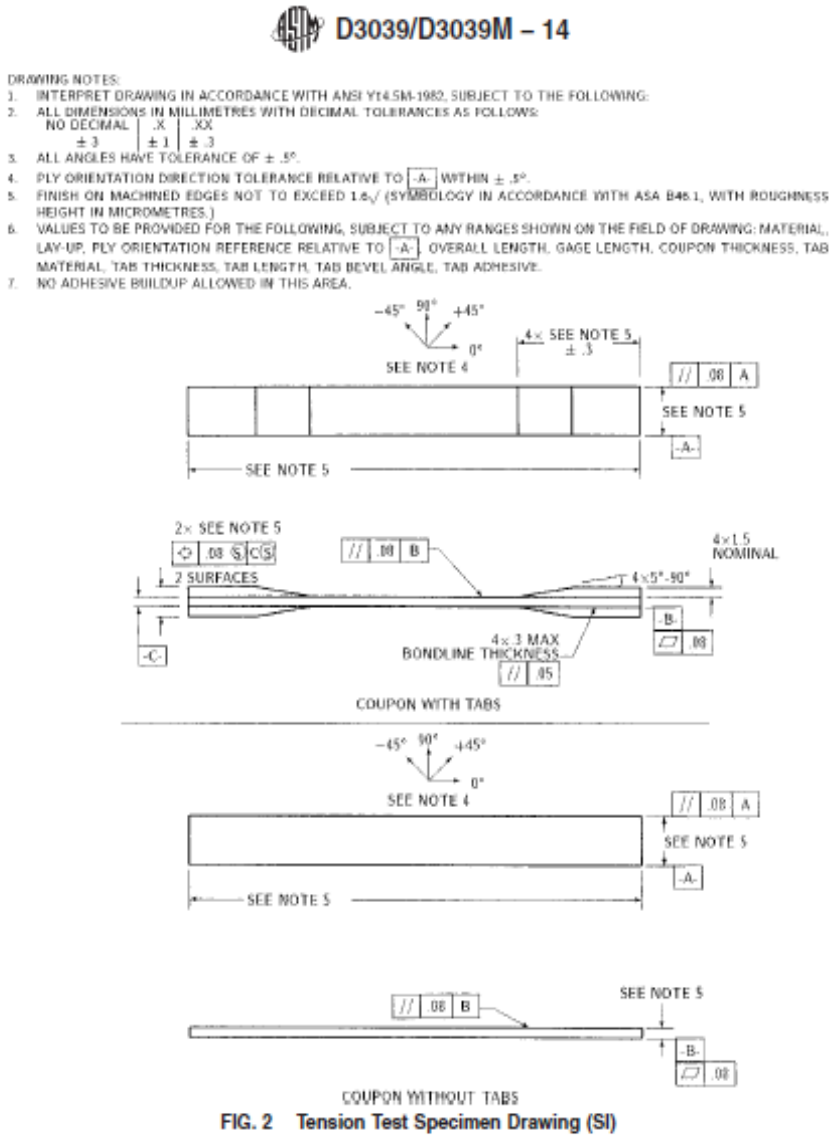

[5]Figure 21 - Engineering Drawing of Tensile Coupons (ASTM D3039-17, Figure 2)

19.2.15. Short beam cantilever specimens

The required specimens for the short beam cantilever test are 1 ½” x ½” and are oriented with the fibers (see ASTM D2344). ASTM D2234 should be used as a guide for proper construction and assembly. See Figure 22, an example engineering drawing reproduced from ASTM 2234.

[5] Reprinted, with permission, from ASTM D3039-17, Standard Test Method for Tensile Properties of Polymer Matrix Composite Materials, copyright ASTM International. A copy of the complete standard may be obtained from www.astm.org

Five test coupons are required for each test fluid and corresponding baseline (ten per set if run serially) plus a minimum of five for baseline property determination.

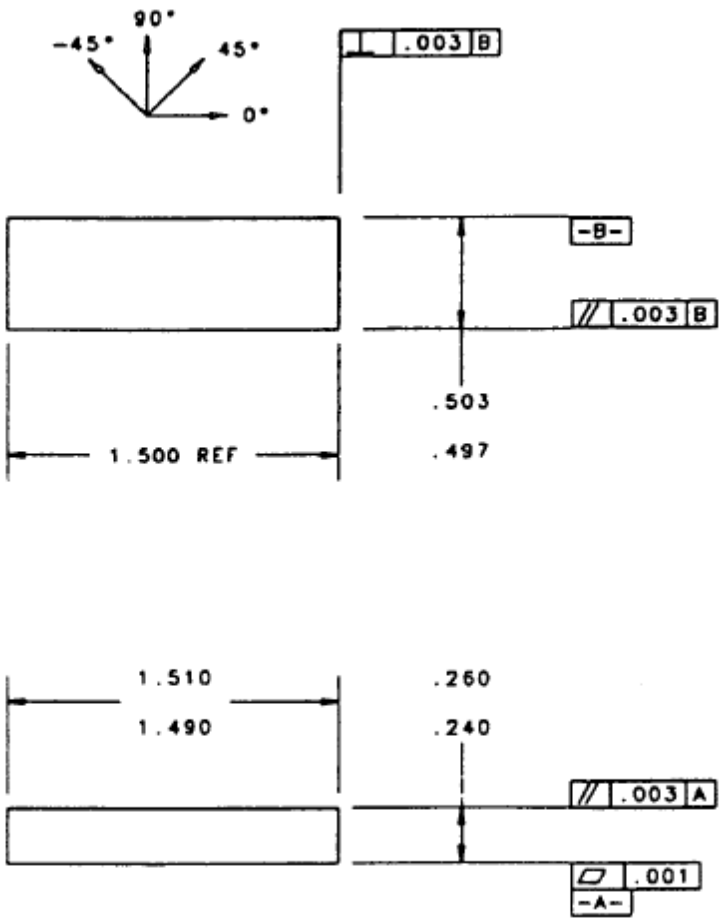

NOTE 1—Drawing interpretation per ANSI Y14.5-1982 and ANSI/ASME B46.1-1986.

NOTE 2—Ply orientation tolerance ±0.5° relative to –B–.

FIG. 2 Flat Specimen Configuration (Inch Pound)

[6]Figure 22 - Engineering Drawing of Short Beam Cantilever Coupons (ASTM D2344-22, Figure 2)

[6] Reprinted, with permission, from ASTM D2344-22, Standard Test Method for Short-Beam Strength of Polymer Matrix Composite Materials and Their Laminates, copyright ASTM International. A copy of the complete standard may be obtained from www.astm.org

19.2.16. V-notch shear specimens

The required specimens for the V-Notch shear test are 3” x ¾” rectangular coupons. A V-notch 0.15” deep and 90° is cut into the center on both sides (See Figure 23). ASTM D5379 should be used as a guide for proper construction and assembly. Note the selected material orientation used when preparing the coupons.

Notch Preparation—Take care to avoid delaminating specimens during notch machining. Stacking and clamping of the specimens in a vise, with a dummy specimen on the back side, has been found to be an effective method of preventing delamination during machining. Machining methods that have worked well for notch preparation include precision grinding and precision milling.

Five test coupons are required for each test fluid and corresponding baseline (ten per set if run serially) plus a minimum of five for baseline property determination.

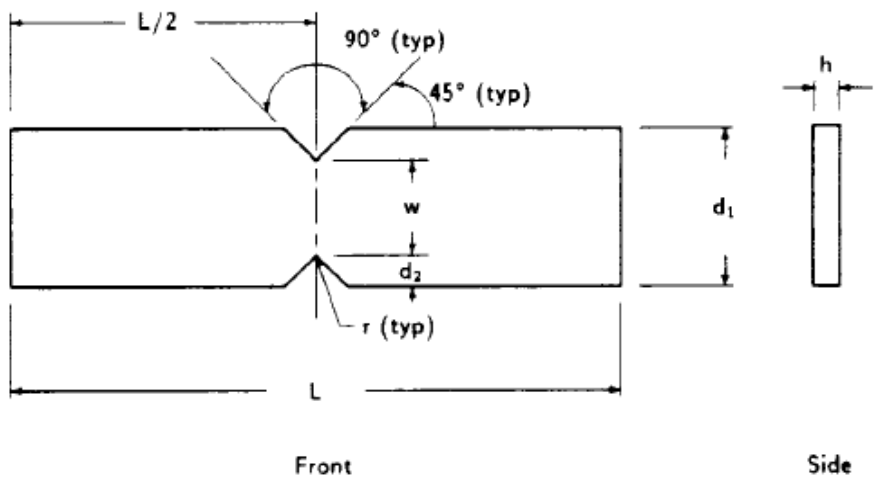

Nominal Specimen Dimensions

d_1	=	19 mm [0.75 in.]
d_2	=	3.8 mm [0.15 in.]
h	=	as required
L	=	76 mm [3.0 in.]
r	=	1.3 mm [0.05 in.]
w	=	11.4 mm [0.45 in.]

FIG. 2 V-Notched Beam Test Coupon Schematic

[7]Figure 23 - Engineering Drawing of V-Notched Test Coupon (ASTM D5379-19, Figure 2)

[7] Reprinted, with permission, from ASTM D5379-19, Standard Method for Shear Properties of Composite Materials by the V-Notched Beam Method, copyright ASTM International. A copy of the complete standard may be obtained from www.astm.org

19.2.17. Adhesive joint samples

Cut test specimens from the bonded panels pictured in Figure 17. Cut the specimens without overheating or otherwise physically damaging the adherend or bonded interface.

Five test coupons are required for each test fluid and corresponding baseline (ten per set if run serially) plus a minimum of five for baseline property determination.

19.2.18. Pre-exposure measurements

19.2.19. Dimensions

The length and width of the traveler coupons are measured using either a digital or manual caliper. The measurements should be recorded to the nearest 0.001 cm. The thickness should be measured using a micrometer. The thickness should also be recorded to the nearest 0.001 cm. Whatever method is used should be used across all the specimens both pre and posttest. In addition to the traveler coupon, the length, width and thickness of the tensile, short beam cantilever, and v-notch coupons should be measured and recorded at this time.

Each traveler coupon should be weighed on a digital balance and the weight recorded to the nearest 0.001 gram. Weights should be taken after all cutting, adhesive bonding, and marking is completed, and no further change should be made to the specimen. This is because the part will be weighed again after exposure and compared to the initial weight, so no change can be made to the specimens which will impact the weight.

19.2.20. Density

Density is determined on the laminate using a displacement method, see ASTM D792. The density can be determined using the density kit for the electronic balance (sometimes referred to as a Jolie balance). The method takes the weight in air and the weight in water and determines density through displacement. Distilled water is used as the displacement liquid. If an automated calculation is not available, the density is determined by calculating the specific gravity of the specimen at 23° C. If the water is not at 23° C, then a correction of the calculation to 23° C is required. See ASTM D792 for full instruction on correction.

$$SpGr\ 23°C = a/(a + w + b)$$

where:

a = apparent mass of specimen, without wire or sinker, in air,

b = apparent mass of specimen (and of sinker, if used) completely immersed and of the wire partially immersed in liquid, and

w = apparent mass of totally immersed sinker (if used) and of partially immersed wire.

The density (ρ) of the specimen in g/cc is then calculated as follows:

$$\rho^{23C} = SpGr\ 23°C\ x\ 997.5$$

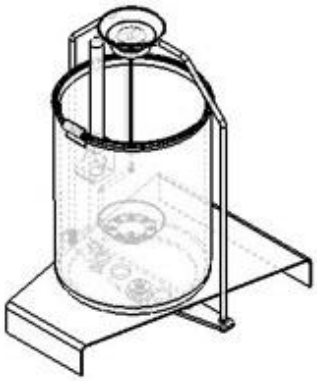

Figure 24 - Example of a Water Displacement Density Measurement

The density is taken using a small piece of the laminate taken from a representative area (not from one of the specimens). The resultant reported density is recorded.

19.2.21. Hardness

The hardness of composite material is measured using a Barcol Indentor as found in ASTM D2583. The model of indentor is determined by the actual hardness of the laminate. The instrument should be calibrated before use. The specimens used for this initial testing must not be coupons that will be used in subsequent testing but should be from the same laminate.

Figure 25 - Example of a Barcol Impressor Hardness Tester

The following is a summary of the procedure as presented in ASTM D2583. Place the Impressor and the material to be tested on a solidly supported, flat, hard, firm surface such as stone, metal, or ceramic. If softer supporting surfaces are used, a false low instrument reading may occur. Set the point sleeve on the surface to be tested. Set the legs on the same surface or on solid material of the same thickness, so that the indentor is perpendicular to the surface being tested. Grasp the instrument firmly between the legs and point sleeve. Apply a uniform downward force quickly, by hand, increasing the force on the case until the dial indication reaches a maximum. Take care to avoid sliding or scraping while the indentor is in contact with the surface being tested. Record the maximum reading. Take a minimum of 10 readings. Be aware that due to the reinforced nature of the composite laminates, there may be observable variations caused by differences in readings primarily attributed to the resin matrix and readings attributed to the reinforcing fibers.

19.2.22. Photographic/visual documentation

A representative sample of each system should be photographed prior to any testing. Place the specimen, a label or other means of identification and a size indicator such as a dime or a steel rule onto a light blue background. Photograph with and without flash to determine the best contrast for the sample. Pay particular attention to documenting any visual observation which is non-standard or may contribute to behavior in subsequent testing, i.e., voids in materials, seams, etc.

19.2.23. Tensile, strain, and modulus

After preparing the tensile bars for test (addition of tabs, mounting of strain gages, etc.), determine the cross-sectional area (width x thickness) of the test gage of the parts in three locations. The cross section

for determining the tensile will be the average of the three measurements. Unless otherwise directed, set the strain rate to 0.01 per minute or a constant head speed of 2 mm/min.

Place the specimen in the grips of the testing machine, aligning the long axis of the gripped specimen with the test direction. Tighten the grips, recording the pressure used on pressure controllable (hydraulic or pneumatic) grips. The ends of the grip jaws on wedge-type grips should be even with each other following insertion to avoid inducing a bending moment that results in premature failure of the specimen at the grip. When using un-tabbed specimens, a folded strip of medium grade (80 to 150 grit) emery cloth between the specimen faces and the grip jaws (grit-side toward specimen) provides a nonslip grip on the specimen without jaw serration damage to the surface of the specimen. When using tabbed specimens, insert the coupon so that the grip jaws extend approximately 10 to 15 mm [0.5 in.] past the beginning of the tapered portion of the tab. Coupons having tabs that extend beyond the grips are prone to failure at the tab ends because of excessive interlaminar stresses.

Start the test at the chosen loading and run until part failure. Record the force versus crosshead displacement, and the force versus strain. If data collection is digital, the sampling rate should be 2 to 3 recordings per second with a goal of a minimum of 100 data points per test. Note the method used to determine failure (visual, sound, etc.) Use this same method for all tests. Record the failure mode using a standardized reporting structure such as the one shown in ASTM D3039.

19.2.24. Calculating test results

Tensile Stress/Tensile Strength—Calculate the ultimate tensile strength, F^{tu} and report the results to three significant figures. If the tensile modulus is to be calculated, determine the tensile stress, σ_i, at each required data point.

$$F^{tu} = P^{max}/A$$

$$\sigma_i = P_i/A$$

where:

F^{tu} = ultimate tensile strength, MPa [psi];

P^{max} = maximum force before failure, N [lbf];

σ_i = tensile stress at ith data point, MPa [psi];

P_i = force at ith data point, N [lbf]; and

A = average cross-sectional area, mm2 [in.2].

Tensile Strain/Ultimate Tensile Strain—If tensile modulus or ultimate tensile strain is to be calculated, and material response is being determined by an extensometer, determine the tensile strain from the indicated displacement at each required data point and report the results to three significant figures.

$$\varepsilon_i = \delta_i / L_g$$

where:

ε_i = tensile strain at ith data point, με;

δ_i = extensometer displacement at ith data point, mm [in.];

L_g = extensometer gage length, mm [in.].

Tensile Modulus of Elasticity - To minimize potential effects of bending it is recommended that the strain data used for modulus of elasticity determination be the average of the indicated strains from each side of the specimen. In summary, if the percent bending is greater than 3 %, average the strains from the back-to-back gages of a like kind.

$$B_y = \frac{|\varepsilon_f - \varepsilon_b|}{|\varepsilon_f + \varepsilon_b|}$$

where:

ε_f = indicated strain from front transducer, με;

ε_b = indicated strain from back transducer, με; and

B_y = percent bending in specimen.

19.2.25. Short beam cantilever

The testing equipment crosshead speed should be set at 1.0 mm/min (0.05”/min) unless otherwise instructed. Record the diameter and material of the nose and side supports. Insert the specimen into the test area by aligning and centering the specimen so that its longitudinal axis is perpendicular to the loading nose and side supports (see Figure 26). Adjust the span such that the span-to-measured thickness ratio is 4.0 +/-0.3 mm (0.012”). The loading nose should be centered between the side supports within +/- 0.3 mm. Both the loading nose and the side supports should overhang the specimen width by at least 2 mm at each side or at least the specimen thickness.

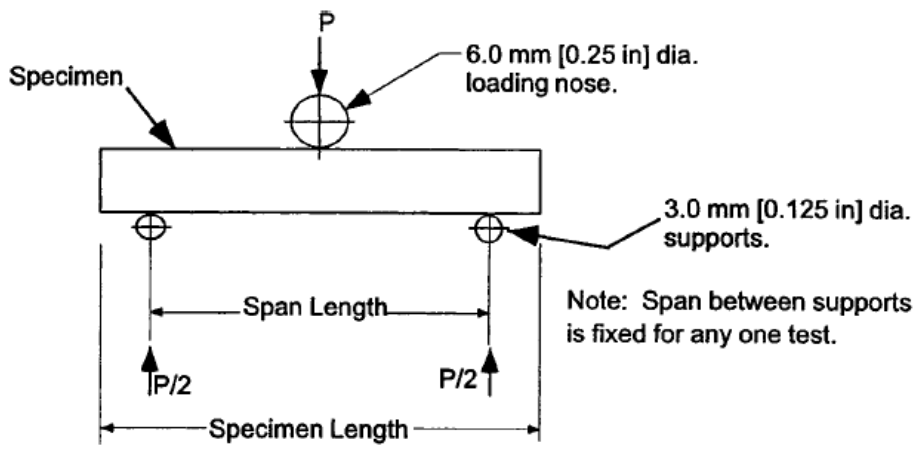

FIG. 6 Horizontal Shear Load Diagram (Flat Laminate)

[8]Figure 26 - Short Beam Test Specimen Inserted for Test (ASTM D2344-22, Figure 6)

Apply the load to the specimen and record the data until the load drops off by 30%, the specimen fails, or the head travel exceeds the specimen thickness.

Visually inspect the sample and record the failure mode. Photograph the specimens, including an identifying label. Examples of typical failure modes are presented in ASTM D2234. Report the maximum load observed, the load-displacement curve, and the observed failure mode.

19.2.26. Calculating test results

Short beam strength is calculated as follows:

$$F^{sbs} = 0.75\ x\ \frac{P_m}{b\ x\ h}$$

where:

F^{sbs} = short-beam strength, MPa (psi);

P_m = maximum load observed during the test, N (lbf);

b = measured specimen width, mm (in.), and

h = measured specimen thickness, mm (in.)

[8] Reprinted, with permission, from ASTM D2344 – 22, Standard Test Method for Short-Beam Strength of Polymer Matrix Composite Materials and Their Laminates, copyright ASTM International. A copy of the complete standard may be obtained from www.astm.org

19.2.27. V-notch shear strength

An active gage length of 1.5 mm [0.062 in.] is recommended for most materials, although larger sizes may be more suitable for some woven fabrics. The active gage section area should not be so large as to extend significantly beyond the area in which shear strain is relatively uniform. Strain gages with a minimum normal strain range of approximately 3 % (yielding 6 % engineering shear strain) are recommended. The strain gages should be placed centered around the loading axis in the gage section of the specimen and mounted at +45° and -45° to the loading axis. If twisting becomes a problem, then mount gages on both sides of the specimen.

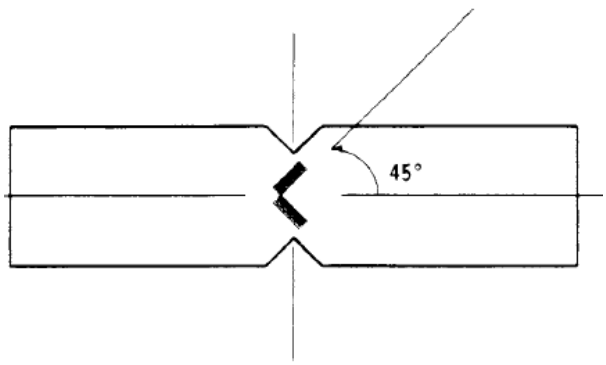

[9]Figure 27 - Placement of Strain Gages on V-Notch Coupons (ASTM D5379-19, Figure 6)

Measure the width across the notch, w, to the nearest 0.001" (25 µm) and the specimen thickness at the notch, h, to the nearest 0.0001" (2.5 µm). Calculate the area; A = w x h. Confirm the angle, depth, and radius of the notch meet specification (See ASTM D5379).

V-notch shear strength testing requires the use of a specialized fixture. See ASTM D5379 for full description and Figure 28 below, taken from D5379.

[9] Reprinted, with permission, from ASTM D5379-19, Standard Test Method for Shear Properties of Composite Materials by the V-Notched Beam Method, copyright ASTM International. A copy of the complete standard may be obtained from www.astm.org

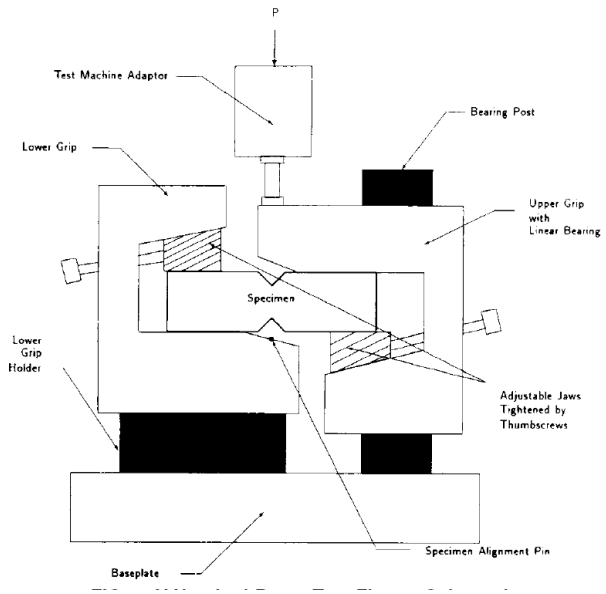

[10]Figure 28 - V-Notched Beam Test Fixture Schematic (ASTM D5379-19, Figure 3)

Test speed should be set to affect a nearly constant strain rate in the gage section of the specimen. A shear strain rate of 0.01 per minute and a standard head displacement rate of 2 mm/min are suggested as standard. The specialized grip fixture is installed into the calibrated test machine and the grips aligned. This is done by moving the two grips of the fixture until the back-wall of the fixture lower grip is co-planar with the back wall of the upper grip.

Connect the strain gages to the data collection system and calibrate as necessary.

Zero the force system. Loosen the fixture jaws enough the sample can be inserted into the grips. Install an alignment tool into the lower jaw. Place the specimen loosely into both grips and adjust strain-gauge lead wires. Press the back side of the specimen flat against the back wall or shims. Pull the specimen alignment tool vertically up into the notch to center the specimen v-notch relative to the fixture in accordance with Figure 29.

[10] Reprinted, with permission, from ASTM D5379-19, Standard Test Method for Shear Properties of Composite Materials by the V-Notched Beam Method, copyright of ASTM International. A copy of the complete standard may be obtained from www.astm.org

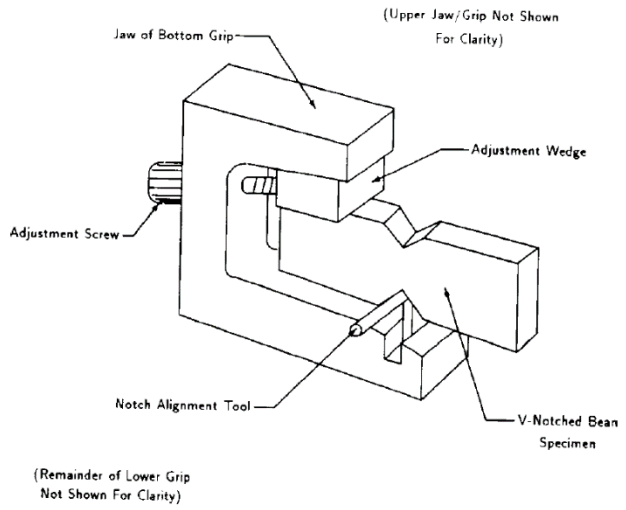

[11]Figure 29 - Specimen Placement in the Fixture (ASTM D5379-19, Figure 10)

While keeping the specimen centered, lightly tighten the left-hand-side jaw (on the lower grip) to fix the specimen. DO NOT OVERTIGHTEN THE JAW; over tightening induces undesirable preload and may damage some materials. There should now be some clearance between the specimen and the upper grip and no force showing on the test machine. If there is no clearance, or if force on the specimen is indicated, adjust either the head, or the jaw of the upper grip, or both, until there is both clearance and zero force. Recheck the specimen placement in the lower grip. Repeat if necessary.

Move the testing machine head until the upper surface of the upper grip just contacts the upper surface of the right-hand side of the specimen, without loading it. Zero the strain gage instrumentation. Lightly tighten the jaw of the upper, right-hand, grip onto the right-hand side of the specimen. DO NOT OVERTIGHTEN THE JAW; over tightening induces undesirable preload and may damage some materials. Preload should be minimized; however, a small amount of preload (40 to 80 N [10 to 20 lbf]) may be unavoidable in a given application.

The specimen should now be centered in the fixture so that the line of action of the force acts directly through the center of the notch on the coupon. Both jaws have been lightly tightened so that the specimen is contacting the upper and lower grip surfaces on both left- and right-hand sides and is lightly supported on the back side away from the gage section. Instrumentation checks are complete, and the specimen is now ready to complete the test.

---

[11] Reprinted, with permission, from ASTM D5379-19, Standard Test Method for Shear Properties of Composite Materials by the V-Notched Beam Method, copyright ASTM International. A copy of the complete standard may be obtained from www.astm.org

Apply the force to the specimen at the specified rate until failure, while recording force versus strain or displacement. If using a digital data collection, use a sampling rate of 2 to 3 data points per second and target 100 data points per test. Record the force, strain and mode of damage if initial ply failures are noted. Record the maximum force of part failure, and the strain at point of failure.

19.2.28. Calculating test results

Visually inspect the part and record the mode and location of the specimen failure. A standardized failure mode tool is found in ASTM D5379.

The ultimate shear stress/ultimate strength is calculated to three significant digits as follows:

$$F^u = \frac{P^u}{A}$$

The shear modulus is calculated by determining the shear stress at each data point as follows:

$$\tau_i = \frac{P_u}{A}$$

where:

F^u = ultimate strength, MPa [psi];

P^u = the lower of ultimate or force at 5 % engineering shear strain, N [lbf];

T_i = shear stress at ith data point, MPa [psi];

P_i = force at ith data point, N [lbf];

A = cross-sectional area, mm2 [in.2]

The Shear Strain is calculated from the normal strains at +45° and -45° as follows:

$$\gamma_i = |\varepsilon_{+45}| + |\varepsilon_{-45}|$$

and ultimate strain is calculated as follows:

$$\gamma^a = \min\begin{cases} 5\% \\ \gamma \ at \ ultimate \ load \end{cases}$$

where:

γ_i = engineering shear strain at ith data point, με;

ε_{+45} = + 45° normal strain at ith data point, με;

ε_{-45} = −45° normal strain at ith data point, με;

γ^a = ultimate engineering shear strain, με.

19.2.29. Adhesion strength (lap shear)

To test the adhesive strength, the force required to break the adhesive bond is measured using ASTM D3163. The goal is to break the specimens at the glue joint, not in the laminate itself.

To test the specimens, place the specimens in the grips of the testing machine so that the outer 25 mm (1 in.) of each end are in contact with the jaws and so that the long axis of the test specimen coincides with the direction of applied pull through the center line of the grip assembly. Apply the loading immediately to the specimen at the rate of 80 to 100 kg/cm2 (1200 to 1400 psi) of the shear area per min. Continue loading to failure. This rate of loading will be approximated by a free crosshead speed of 1.3 mm (0.05 in.)/min. Record the load at failure and the nature and amount of this failure (cohesion in adhesive or laminate, or adhesion) for each specimen. Express all failing loads in pounds per square inch of shear area, calculated to the nearest 0.01 in^2. By bonding a ½" region on each coupon, the test area is one square inch, making the measured force, force / in^2.

19.3. Exposure

Materials are exposed to the fuel in separate jars, generally a one quart. For example, the Bis A slow cure specimens are aged in a separate jar from the Bis A fast cure specimens. Specimens of different materials are not aged in the same container because it is possible that components may leach out into the fuel and react with other material specimens or components. Different style test coupons of the same material may be aged in the same jar. Test specimens should be suspended or otherwise supported in the test fluid and not just laid in the bottom of the jar. This can be done by using a rack and wires to hang the specimens and then place in the jar. The fill level for each jar should be noted; this is facilitated by filling each jar to the same mark.

The jars should be stored at room temperature in an approved flammables storage location or cabinet. Assure all sample jars are thoroughly labeled in accordance with local regulations. Jar should be visually checked on a regular basis to confirm the presence of fluid sufficient to cover the samples continues to remain in the jars. Top off the jars as necessary to maintain fluid levels. No fluid exchanges are required.

Test duration is 4 weeks (28 days).

19.4. Post test exposure

Repeat all pre-exposure testing on specimens (See Section Pre-exposure measurements). Record all data and determine the amount of change between pre-exposed median values and post-exposure

median values. Compare the amount of change between exposure fluids and determine if there are any statistically significant differences.

20Distribution filter, coalescer, & tank coatings

20.1. General materials

In order to provide information on the compatibility of the filter/coalescer housings with the fuel, it is necessary to procure housings representative of those typically used in industry. See Appendix J for test materials.

In order to be used as a test vessel, it is necessary to install plugs in all ports/connections to provide sealing of the housing during the exposure testing.

In addition to the filtration system, the coatings used on the interior of distribution storage tanks must be procured. These may be prepared by a tank manufacturer, for example the standard QC test coupons, or self-prepared using cold steel.

20.2. Pleated filter test

Filter functionality can only be demonstrated on a flowing rig. No functionality testing will be done.

20.2.1. Test specific materials

Fuel filters comprised of a pleated cellulosic paper media are used to remove dirt and particulates from the fuel. They are comprised of an element that has a pleated paper element that is glued together. It is held within a cartridge that has a rubber seal on the end. See Appendix J for a materials list.

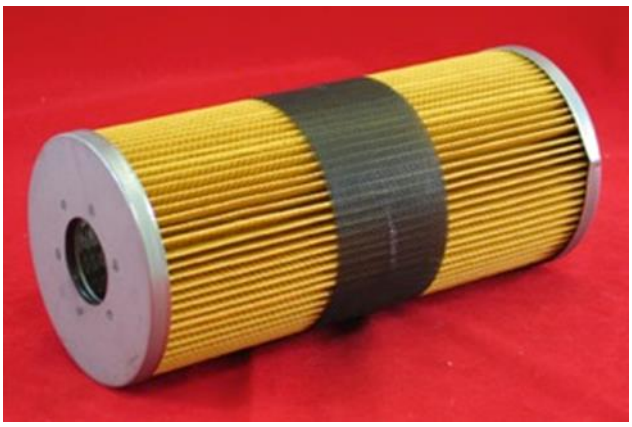

Figure 30 - Pleated Paper Filter

20.2.2. Specimen preparation

The purpose of filter material compatibility (see SAE J905 SEP2009 Fuel Filter Test Methods) is to confirm the filter's ability to maintain structural integrity without affecting the physical properties of the fuel. Measure the dimensions of the filter (circumference, length, thickness of the pleat). Place a filter cartridge, as received, in a housing per manufacturer's procedures.

20.2.3. Exposure

Fill the container with the test fluid to saturate and reasonably cover the cartridge (approximately one gallon). Seal the housing or container. Repeat with the reference fluid. If re-using the housing, note which housing was the test and which the reference. Maintain this orientation when reusing the housing. Also note the fuel sample identification and do not cross contaminate the test fluids between housings.

Place the container in a room temperature storage area appropriate for the storage of flammable liquids. The temperature should be maintained at approximately 70 °F to 77 °F (21 °C to 25 °C) for the duration of the test. Allow test to run 500 hours (21 days).

20.2.4. Post test measurements

At the end of the 500 hours, visually inspect the housing, particularly any elastomeric seals, paint staining, or corrosion. Open the container and lift the filter from the fluid. Visually evaluate the fuel and filter. Note color changes to the fuel, distortions to the filter, and deposits. Allow the fluid to drain back into the container and retain the sample for subsequent testing.

After draining the filter, evaluate the filter for any physical changes or any disintegration of the end caps, sealing adhesive or media. Measure the circumference, length, and thickness of the pleat for comparison. For filters which incorporate a support screen, it is necessary to cut the support material from the filter cartridge to facilitate inspection of the pleated filter material.

Test the fuel samples for Water Reaction, Surface Tension and Material migrations (methods below).

20.2.5. Calculations

No calculations related to the housing or filter cartridge are required.

20.3. Water coalescer test

Coalescer functionality or confirmation the media has not been disarmed can only be demonstrated on a flowing rig. No functionality testing will be done.

20.3.1. Test specific materials

Filter separator/coalescers work by providing a matrix onto which the water in the fuel will coalesce. This matrix is comprised of a network of fiberglass strands and a pleated media. The media is a phenolic resin impregnated fiberglass, held within a cartridge that has an aluminum core and a Buna-N gasket on the end.

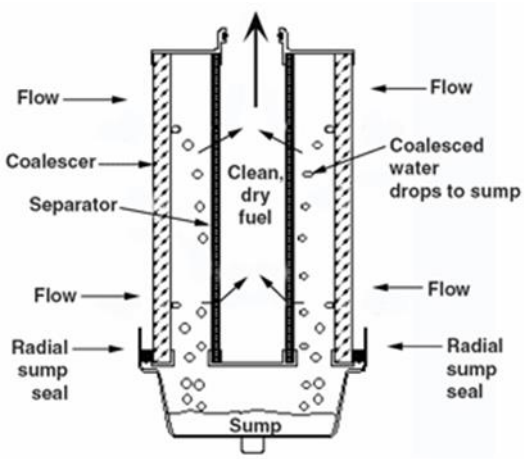

Figure 31 – Velcon OS 51288 Coalescer/Separator Cartridge

20.3.2. Specimen preparation

Coalescers are self-contained units which do not require further preparation beyond inspection of the gasket on the end of the unit. Place an element, as received, in a housing per manufacturer's procedures.

20.3.3. Exposure

Fill the container with the test fluid to saturate and reasonably cover the element (approximately one gallon). Seal the housing or container. Repeat with the reference fluid. If re-using the housing, note which housing was the test and which the reference. Maintain this orientation when reusing the housing. Also note the fuel sample identification and do not cross contaminate the test fluids between housings.

Place the container in a room temperature storage area appropriate for the storage of flammable liquids. The temperature should be maintained at approximately 70 °F to 77 °F (21 °C to 25 °C) for the duration of the test. Allow test to run 500 hours (21 days).

20.3.4. Post test measurements

At the end of the 500 hours, visually inspect the housing, particularly any elastomeric seals, paint staining, or corrosion. Open the housing and lift the element from the fluid and allow the fluid to drain

back into the container. Visually evaluate the fuel and coalescer. Note color changes to the fuel, and deposits. Retain this fluid for subsequent tests.

After draining the element, evaluate the specimen for any physical changes or any disintegration of the end caps, sealing adhesive or media.

Test the fuel samples for Water Reaction, Surface Tension and Material migrations (methods below).

20.3.5. Calculations

No calculations related to the housing or cartridge are required.

20.4. Water reaction testing

To determine the presence of water-soluble contaminants in the sample that may have been leached from the filter media, the fuel should be tested for its water reaction per ASTM D1094.

5) Prepare a 100 ml graduated cylinder and stopper that has been cleaned to remove all traces of oil. This can be done either by flushing with n-hexane followed by cleaning with a non-ionic glass cleaning solution or chromate glass cleaning solution. Following the cleaning with the glass cleaning solution, rinse the cylinder and stopper with distilled water and then with phosphate buffer solution. Allow cylinder and stopper to drain.

6) Measure 20 ml of phosphate buffer at room temperature into the cylinder and record the volume to the nearest 0.5 ml. Add 80 ml of the fuel to be tested, also at room temperature. Stopper the cylinder. Shake, not swirl, the sample for 2 minutes to create an emulsion. Place the cylinder on a vibration free surface and allow to settle undisturbed for 5 minutes.

7) Without picking up the cylinder, view the cylinder in diffused light for the change in volume of the aqueous layer to the nearest 0.5 ml, the degree of separation of the two phases, and the condition of the interface layer in accordance with ASTM D1094 Table 2.

20.5. Interfacial tension (surface tension)

To evaluate impact on the ability of the fluid samples to shed water caused by leaching materials from the cartridges, the fuel should be tested for changes in surface tension per ASTM D1331. This is only a test of the fuel and not a test of the continued functionality of the hardware.

1) All glassware used requires cleaning with a non-ionic glass cleaning solution or a chromate glass cleaning solution, followed by a thorough rinsing with distilled water. The platinum ring

from the surface tensiometer should also be cleaned with a suitable solvent and rinsed with distilled water. Allow to dry and then heat ring to white hot in a gas flame.

2) Calibrate the tensiometer prior to use per the instrument instructions. Make sure the instrument is level during the calibration and any subsequent tests. An example calibration procedure is included in D1331 if none is provided with the individual tensiometer.

3) After the unit is calibrated, confirm the unit is level and install the cleaned platinum ring. Check the plane of the ring and set the dial and Vernier at zero. Adjust the rear adjusting screw so that the index level of the arm is opposite the reference mark on the mirror. Place the test solution in a clean vessel and place the vessel on the sample platform. Raise the sample platform so that the ring is just submerged.

4) Lower the platform slowly, at the same time applying torsion to the wire by means of the dial adjusting screw. The goal is to keep the ring at the zero position. The surface tension is the dial reading when the ring breaks the surface. Make at least three measurements. Record and report the temperature of the fluid and the time it took to make the measurement.

20.5.1. Calculations

Because the supplied fluids are unknowns, their values for correction (F) are not currently available, therefore, report the surface tension as an uncorrected value in grams/centimeter with a notation.

20.6. Material migration by vacuum filtration

In order to determine whether degradation sufficient enough to cause filter breakdown has occurred either due to adhesive failure, extraction from seals and gaskets, or removal of material from the filter media, the relative amount of contaminant that is present in the fuel after exposure testing is determined. This is done using a standard laboratory vacuum filtration. One such method is described in ASTM D2276. A known volume of fluid is filtered through a pre-weighed membrane filter and the increase in mass is determined. This change in mass is compared to the change in mass of a reference membrane filter that is located under the test filter and the actual contaminant mass determined.

1) Either prepare matched weight membrane filters or procure membrane filters in matched weight sets.

2) All glassware used in this method must be cleaned by washing with non-ionic glass cleaning solution, rinsing with distilled water, rinsing with <u>filtered</u> isopropanol, and rinsing with filtered flushing fluid. Allow to dry.

3) To prepare matched weight filters, use forceps to place the test and control membranes side by side on clean glass support rods in a clean petri dish. Cover with clean lids, slightly ajar, and place the petri dish and membranes in a 90 °C (200 °F) oven for 30 minutes. Remove from the oven, still covered but ajar and allow to cool and equilibrate to ambient conditions for 30 minutes. Using forceps and only handling the by the edge, take the control filter and weigh on an analytical balance. Return the membrane to the petri dish. Repeat with the test membrane filter. Record the membrane masses.

4) Flush the membrane support pad with the flushing fluid and install into the filter flask.

5) Using clean forceps, place the weighed control membrane and the weighed test membrane on the support pad of the filter assembly. Assemble the flask. Make sure a clean ground wire has been installed in the flask to mitigate static charge build up.

6) Turn on the vacuum.

7) Take the container of fluid to which the filter has been exposed and shake thoroughly to assure all contamination has been suspended in the liquid.

8) Without permitting the sample to settle, pour a 100 ml sample of fluid into a clean graduated cylinder and immediately pour this sample into the top of filtration apparatus with the vacuum running.

9) With the vacuum still running, introduce approximately 250 ml of the <u>filtered</u> flushing fluid into the filter apparatus making sure to flush down the sides.

10) After all observable fluid has been drawn through the filter membranes, slowly release the vacuum.

    a. Note: if the vacuum is released too quickly, any deposits on the filter may be blown off.

11) Remove the filter assembly from above the membrane filters and support. Carefully remove the test and control filters and place them back onto the clean supports in the clean petri dish.

12) Dry the filters in a 90 °C (200 °F) oven for 30 minutes and reweigh, being careful not to disturb any contamination that may be on the filter surface.

20.6.1. Calculations

To determine the mass of contaminant present:

$$\frac{\left((W2 - W1) - (W4 - W3)\right)}{Sample\ Volume}$$

Equation 22 - Mass of Contaminant

Where:

W1 = initial mass of the test membrane

W2 = final mass of the test membrane

W3 = initial mass of the control membrane

W4 = final mass of the control membrane

Sample volume = 100 ml (unless other volume used)

20.7. Distribution tank coatings

20.7.1. Test specific materials

Test panels of a minimum of 2" x 2" are recommended. Test panels should be constructed of cold steel and the specified coating systems applied. It is acceptable to procure QC test panels from a fuel tank manufacturer. Panels must be fully identified by the manufacturer as to system identification. See Appendix J for required systems. A traveler specimen, a panel which is handled in the same manner as the test specimens, but not exposed to fuel shall also be prepared.

20.7.2. Specimen preparation

1) Photograph each panel under controlled lighting and camera settings.
2) Test the sample paint Rockwell hardness per ASTM E-18 with a HR15XW type indentor.
    a. Alternatively, hardness may be measured per ASTM D2240, Shore D.
3) Take three pre-exposure readings were taken on the left side of each test panel. Three readings, post-exposure will be taken on the right side of the same surface.
    b. Avoid testing in the area where the adhesion has is to be inscribed.
    c. Any specimen not meeting the hardness may be insufficiently cured and should not be used.

4) Cut an “X” into the surface of the panel per ASTM D3359. This “X” is the industry standard adhesion test and can be related to a scratch in an aircraft painted surface. Avoid the area where the hardness test was performed.

5) Determine pre-exposure adhesion test per ASTM D3359.

20.7.3. Exposure

Tank coating specimens with the ASTM D3359 “X” cuts are placed into a test container and covered with fuel. The test surface on panels shall not be in contact with other specimens or with the exposure container.

Expose specimens for 28 days without fuel change at 71 °C (160 °F). Routinely inspect the containers to confirm fuel fill and add fuel if necessary. Continued fuel loss of more than 5 mL over a 7-day period indicates insufficient sealing and shall be corrected.

20.7.4. Post test measurements

1) At the end of the 28-day exposure, rinse the specimens with isopropanol and allow to dry.

2) Perform adhesion test per ASTM D3359.

a) Report results comparative to the 100LL exposed panels and to the unexposed traveler panel.

3) Measure coating hardness per ASTM E-18. Measurements will be taken on the right side of the same surface as the pre-exposure specimens.

b) If ASTM D2240, Shore D was done pre-exposure, repeat post-exposure.

20.7.5. Calculations

No special calculations are required.

21Vendor supplied materials

21.1. General materials

In order to provide information on the compatibility of materials with the fuel which are specific to, and/or proprietary to individual original equipment manufacturers (OEM), it is necessary to procure materials directly from the OEMs. This includes instances where the provided military or industry specification covers a variety of formulations or constructions, or which do not provide enough specificity to be used to procure materials comparable to those used by the OEM. In other cases, there

is only an OEM part number, and no further information on the material is available. In those instances it is necessary to procure the specific material used by the OEM, directly from the OEM See Appendix K for test materials.

21.2. Flat stock

Materials which are procured as flat stock are used to produce items such as gaskets. These materials may be tested using standard industry practices; specifically tensile/elongation, density, volume change, and hardness.

21.3. Tensile/elongation, hardness, density, and volume

21.3.1. Materials

1) MIL-PRF-6855, Piper P/N 187-433 Synthetic Rubber Sheet
2) Fairprene, Lycoming P/N BN-0002.05
3) ASTM D910 compliant aviation gasoline produced with the high aromatic content
4) Candidate fuel(s)

21.3.2. Specimen preparation

1) Cut ASTM D471 1” x 2” volume change specimens.
2) Cut ASTM D412 Die C tensile/elongation “dog bone” specimens.
3) Label each individual specimen with a unique identification.
4) Measure material thickness in compliance with ASTM D412, Section 6.3.
5) Measure the Shore A durometer in compliance with ASTM D 2240.
6) Measure the unexposed density in compliance with D471.
7) Determine pre-exposure tensile/elongation values. Testing shall be in compliance with ASTM D412, Section 12.
8) Photograph examples of each specimen type.

21.3.3. Exposure testing

1) Hang a minimum of four dog bone specimens on non-reactive hangers such that specimens do not interfere with each other. The height of the hanging rack shall be sufficiently tall that specimens hang freely and do not kink at the bottom or rest on the floor of the container.

2) Place a minimum of three volume change specimens in such a way they do not lay flat on the bottom of the container and do not interfere with each other. If using the same container as the tensile specimens, confirm the volume change specimens are not interfering with the dog bone specimens.

3) Expose the samples at room temperature and the elevated temperature specified in Appendix K, per ASTM D471 for a total of 28 days with a fuel change at day 14.

4) After 14 days remove the sample containers and refill each container with fresh fuel. Return the containers to the sample test chamber.

21.3.4. Post exposure measurements

1) Photograph and visually inspect each specimen immediately after removing specimens from the test fluid.

2) Measure each dimension specimen in the same manner as initially. Record the specific specimen identifier and the measurements.

3) Weigh each dimension specimen in the same manner as initially. For parts whose weight does not stabilize, that is they continue to lose weight as they sit on the balance, record the initial weight observed. Also make note that the part is continuing to lose weight. Record the specific specimen identifier and the measurements

4) Determine the post exposure density

5) Using the same method as initially, determine the tensile and elongation values for the post exposure specimens.

21.3.5. Calculations

1) For tensile strength,

$$T = F/A$$

Equation 23 - Tensile Strength

where:

T = tensile strength,

F = breaking force, and

A = the cross-sectional area

$$TS_s = \frac{F}{A(1 + \frac{\Delta V}{100})^{2/3}}$$

Equation 24 Tensile Strength after Exposure

where:

TS_s = tensile stress based on swollen unstretched cross-sectional area

F = observed force

A = original unstretched cross-sectional area

ΔV = volume swell after immersion, %

2) For elongation,

$$E = \frac{100\ (L - L_o)}{L_o}$$

where:

E = elongation in percent

L = distance between bench marks after extension

L_o = original distance between bench marks

3) To express all properties after immersion as a percentage change from the original properties (hardness, mass, density, volume, etc.), use the following formula:

$$\Delta \boldsymbol{P}, \% = \frac{\boldsymbol{P_i} - \boldsymbol{P_o}}{\boldsymbol{P_o}} * \mathbf{100}$$

Equation 25 Change in Properties after Exposure

where:

ΔP = The change in a given property (length, thickness, hardness, elongation, etc.)

P_i = property value after immersion

P_o = original property value

4) Test results shall be reported as the average values of the specimens. All of the measured values shall be used unless a specific, definable reason for excluding a value is identified and documented.

21.4. Shaped specimens

21.4.1. Materials

1) Piper 462-049 Gasket
2) Piper 462-056 Gasket
3) Piper 106927-001 Duckbill Check Valve
4) ASTM D910 compliant aviation gasoline produced with the high aromatic content
5) Candidate fuel(s)

21.4.2. Specimen preparation

1) Volume/density change specimens.
    a. Depending on the shape and size of the supplied gaskets, it is unlikely that 1" x 2" specimens can be prepared. Specimens of a size and shape that is conducive to pre and post property measurements is recommended. The larger the piece, the more sensitive to changes the specimen will be. The more complex the shape, the more difficult the determination of volume will be.
    b. Finished parts such as the duckbill check valve will not be conducive to volume change measurements. Measure only the density.

2) Label each individual specimen with a unique identification.

3) Measure the unexposed density in compliance with D471

4) Measure material thickness in compliance with ASTM D412, Section 6.3.

    a. For finished shaped parts, identify a conducive location for measuring thickness. Note the location and repeat the measurement in the same location post exposure.

5) Measure the Shore A durometer in compliance with ASTM D 2240.

    a. For finished shaped parts, it may not be possible to identify a location for measuring Shore A durometer. Alternatively, attempt to determine Shore M durometer using a pressure foot conducive to an available area on the part. If it is not possible to determine the durometer, note this and continue with testing.

6) Photograph examples of each specimen type.

21.4.3. Exposure testing

1) Hang a minimum of four specimens on non-reactive hangers such that specimens do not interfere with each. The height of the hanging rack shall be sufficiently tall that specimens hang freely and do not kink at the bottom or rest on the floor of the container.

2) Expose the samples at room temperature and the elevated temperature specified in Appendix K, per ASTM D471 for a total of 28 days with a fuel change at day 14.

3) After 14 days remove the sample containers and refill each container with fresh fuel. Return the containers to the sample test chamber.

21.4.4. Post exposure measurements

1) Photograph and visually inspect each specimen immediately after removing specimens from the test fluid.

2) Measure each dimension specimen in the same manner as initially. Record the specific specimen identifier and the measurements.

3) Weigh each dimension specimen in the same manner as initially. For parts whose weight does not stabilize, that is they continue to lose weight as they sit on the balance, record the initial weight observed. Also make note that the part is continuing to lose weight. Record the specific specimen identifier and the measurements

4) Determine the post exposure density

5) Measure the durometer in the same manner as initially.

6) Compare flexibility of the check valve pre and post exposure. Qualitatively comment on any changes in flexibility, appearance of cracking, or other observed changes. Compare differences between the 100LL and test fuel exposed parts.

21.4.5. Calculations

1) To express all properties after immersion as a percentage change from the original properties (hardness, mass, density, volume, etc.), use the following formula:

$$\Delta \boldsymbol{P}, \% = \frac{\boldsymbol{P_i} - \boldsymbol{P_o}}{\boldsymbol{P_o}} * \mathbf{100}$$

Equation 26 Change in Properties after Exposure

where:

ΔP = The change in a given property (length, thickness, hardness, elongation, etc.)

P_i = property value after immersion

P_o = original property value

2) Test results shall be reported as the average values of the specimens. All of the measured values shall be used unless a specific, definable reason for excluding a value is identified and documented.

22Manufacturer controlled wing test

22.1. Test specific materials

Test equipment shall be designated by individual airframe manufacturers, including but not exclusive Piper, Cirrus, and Cessna. Each manufacturer is responsible for identifying desired aircraft for testing, and determining the state and type of sealant used in the “wet wing” production

22.2. Specimen preparation

The following information provides guidance on one means of preparation, but not the only means. Specific preparation will be at the discretion of the individual airframe manufacturer.

1) Identify the type of sealant currently in the test article. This includes but is not limited to the sealant producer, sealant type, and sealant class.
2) Identify the state/condition of the sealant. This includes information related to the date of installation, flight hours since installation, and any other information related to the age and exposure conditions experienced by the aircraft since sealant installation.
3) Photograph the condition of the sealant at multiple locations prior to test.
4) If practical, confirm the condition of the low point drain and any fuel filters.

22.3. Exposure

Exposure conditions are at the discretion of the airframe manufacturer. The choice of exposure shall be fully documented, including but not limited to:

1) Duration of exposure on a given test fuel; 100LL, unleaded fuel, other
    a. Document whether the exposure was 100% on one fuel, or if there was a fuel swap. If there was a swap, how long was each exposure and other pertinent information on fuel switching
2) Temperature profile of exposure; ambient, flight envelope, elevated, etc.
3) Document the volume of fuel used throughout the exposure and whether the consumption of the fuel was due to flight test or physical exchange (drain and refill).
4) Test duration is at the discretion of the airframe manufacturer.

22.4. Post test measurements

The following information provides guidance on one means of post test evaluation, but not the only means. Specific preparation will be at the discretion of the individual airframe manufacturer.

1) Visually inspect the condition of the sealant after exposure. Note and photograph any observed anomalies, paying particular attention to areas documented prior to the exposure.

2) Visually inspect and document the condition of the fuel in the low point drain and in any fuel filters. Pay particular attention to the presence of debris related to the wing tank sealant.

23 Grease resistance testing

23.1. Grease solubility

23.1.1. Materials

1) AMS-G-6032 Grease, plug valve, gasoline and oil resistant, see Section 5.13.
2) ASTM D910 compliant gasoline produced with high aromatic content
3) Candidate fuel(s)
4) Standard test fluid, Hydrocarbon Fluid Type III; (60:25:15 isooctane:toluene:xylene)

23.1.2. Specimen preparation

Each test fluid shall be run as a minimum in triplicate, resulting in a minimum of six test tubes.

1) Clean and dry a set of centrifuge tubes for each test fluid (a minimum of three sets).
2) Weigh each test tube to within 0.2 mg and record weight.
3) Using a clean spoon spatula or similar tool, spread ~2 grams of grease in a thin film on the inside of each centrifuge tube.
4) Re-weigh each filled tube within 0.2 mg and record. This weight minus the original tube weight will be the original grease weight.
5) Fill each tube with 100 mL of the respective test fuels and stopper the tube.
6) Using the mechanical shaker, agitate the filled tubes until the grease is thoroughly dispersed, approximately 30 minutes.
7) Centrifuge the filled tubes until the fluid and sample are completely separated, as indicated by the fluid portion being clear/transparent.
8) Weigh a clean, dry evaporation dish to within 0.2 mg for each specimen.
9) Pipet 50 mL of the clear fluid into an evaporation dish. Be careful not to disturb the sediment layer.

10) Place the evaporation dish and specimen on a steam bath or other suitable evaporation table until the liquid is evaporated.

11) Dry the dish in an oven for 30 minutes at 100 °C (212 °F).

23.1.3. Post exposure measurements

1) Remove the dish from the oven using tongs or cotton gloves and re-weigh the evaporation dish within 0.2 mg.

23.1.4. Calculations

Calculate the Weight of Sample (mg) after Drying

A = (Evaporation dish + specimen) – Evaporation dish

Calculate the original weight of sample (mg)

B = (Centrifuge tube + specimen) – Centrifuge tube

Calculate the percent solubility of sample in test fluid

$$\text{Percent solubility} = \frac{200 * A}{B}$$

Where A = weight of sample (mg) after drying

B = weight of original sample

23.2. Grease condition

23.2.1. Materials

1) AMS-G-6032 Grease, plug valve, gasoline and oil resistant, see Section 5.13.

2) ASTM D910 compliant gasoline produced with high aromatic content

3) Candidate fuel(s)

4) Standard test fluid, Hydrocarbon Fluid Type III; (60:25:15 isooctane:toluene:xylene)

5) ASTM B209 Aluminum strips, 5.08 x 1.3 x 0.04 cm (2 x 0.5 x 0.02 inches)

6) 3” x ½ “ O.D. test tubes with stoppers (7.5 cm x 1.5 cm O.D)

23.2.2. Specimen preparation

Each test fluid shall be run as a minimum in triplicate, resulting in a minimum of six test tubes and six aluminum strips. Prior to starting testing, confirm the aluminum test strips will fit in the test tubes.

1) Fill clean 3” x ½” O.D glass test tubes to a depth of 2.5 cm (1”) with test fluid.
2) Spread a thin, even layer of grease on both sides of the aluminum strip.

23.2.3. Exposure testing

1) Place a coated test strip into the fluid in the test tube so that the specimen is halfway submerged.
2) Stopper the tube and allow to stand undisturbed for 8 hours at ambient temperature (~25 °C).
3) After 8 hours, remove the test strip, being careful not to disturb the sample.
4) Dip the specimen once into a tube/container of fresh test fluid.
5) While wet, visually inspect the grease surface for indication of swelling, loss of adhesion to the aluminum, blistering, cracking, deterioration, or other visual indications of attack. Record observations.
6) Allow the strip to dry for 24 hours at ambient temperature (~25 °C) and re-examine for signs of deterioration. Record observations.

23.2.4. Post exposure measurements

None other than visual inspections

23.2.5. Calculations

No calculations required.

24Pass/fail criteria

The following pass/fail criteria have been identified for the PAFI Materials Test Plan. Pass/fail criteria may have been developed from quality control and material validation testing and as such may not be comparable for fluid exposure testing results.

The following pass/fail criteria will be used to determine performance unless the final results for the D910 compliant 100LL aviation gasoline do not meet the presented criteria. In the case the 100LL values do not meet the criteria the measured results for the 100LL shall be used as the pass/fail value.

Where the original, unexposed materials do not meet the specified values, this value shall be used as the baseline and the deviation noted.

24.1. Task 1 – MIL-DTL-6000 hose test

24.1.1. Hose property testing

1) Per MIL-DTL-6000, §3.5.8.3, the increase in specimen volume shall not be greater than 85%.

2) Per MIL-DTL-6000, §3.5.9, the original tensile strength of the unexposed hose shall be greater than 6.9 MPa (1,000 psi). Following the fuel exposure, the tensile strength shall not be less than 45% of the original tensile strength §3.5.9.1.

3) Per MIL-DTL-6000, §3.5.10, the original ultimate elongation of the unexposed hose shall not be less than 250%. Following the fuel exposure, the ultimate elongation shall not be less than 50% of the original elongation per §3.5.10.3.

24.1.2. Hose internal soak testing

1) The increase in the inner diameter shall not be greater than 25% of the original outside diameter value and shall not be less than 75% of the original inside diameter value.

24.2. Task 2 – Bladder

1) Per FAA TSO-C80, Paragraph 12.1, following testing, the non-volatile gum residue shall be less than 60 mg/ 100 mL.

2) Per FAA TSO-C80, Paragraph 12.1.1, following testing, the stoved gum residue shall be less than 20 mg / 100 mL.

3) Per FAA TSO-C80, Paragraph 8, following exposure, the bladder sheet shall show no leakage or staining from the bladder, and no delamination, cracking, blistering, or other indications of degradation of the exposed surface.

24.3. Task 3 – Polysulfide testing

Evaluation of the sealants shall be performed in accordance with MIL-HDBK-510, Appendix D, §D.5.10.2. This evaluation requirement is based on variations of a test fuel from a baseline fuel. Allowable variations are based on the standard deviation of the test methods. The pass/fail criteria provided in MIL-HDBK-510 are taken from the material specifications where applicable. When

specification limits were not available, requirements were taken from similar materials in other programs.

It is recognized that the pass/fail criteria, developed from the sealant specifications are a compromise between the criteria provided following exposure with test fuel which has similarities to aviation gasoline, and the exposure temperatures and times. All of the provided pass/fail criteria have been subjected to sealant manufacturer review and have been accepted. Ultimately, in the case where resulting values when exposed to 100LL do not comply with the pass/fail criteria provided, these actual values will be used for the comparative analysis.

1) Each sealant's values measured on day 28 and 42 shall be stabilized within 10% of the 14-day values for each property; Hardness, Tensile, Elongation, and Volume Swell. The purpose of this requirement is to assure the effect of the exposure fluid on the sealant does not continue to change over time.

    a. It is recognized the absolute measured values are small enough that the 10% change value may be less than the repeatability of the test. This should be noted in the final report.

2) Specific pass/fail criteria for each of the sealants are provided in the following table.

3) The results from the AMS3281 on the fiber reinforced composite shall be a report only of the results. The results shall include the unexposed peel strength, the 100LL high aromatic exposed peel strength, the typical 100LL exposed peel strength, and the test fuel exposed peel strength at each exposure duration.

4) The Buna-N Topcoat, "Slosh Coat" evaluation is performed in accordance with SAE AMS-S-4383. This evaluation is also based on variation of a test fuel from a baseline fuel. The pass/fail criteria, developed from the sealant specification is also a compromise between the criteria provided. The specific pass/fail criteria for the topcoat are provided below.

Table 2 – Pass/Fail Criteria of Fuel Tank Sealants

Description	Spec/Product	Test	Test Procedure	Evaluation Criteria	
				Test Requirements @ 42 Days	Test Requirement @ 70 Days
Polysulfide Dichromate Cured	SAE-AMS-8802 Type 1, Class B-2	Peel Strength	SAE AS5127/1	>20 lbin / 100% cohesion	>7 lbin / 100% cohesion
		Hardness, Shore A	ASTM D2240 or SAE AS5127/1	> 35 pts	
		Tensile Strength	ASTM D412 or SAE AS5127/1	> 50 psi	
		Elongation	ASTM D412 or SAE AS5127/1	> 200%	
		Volume Swell	ASTM D471 or SAE AS5127/1	-10% to 10%	
Polysulfide Manganese Cured	SAE-AMS-8802 Type 2, Class B-2	Peel Strength	SAE AS5127/1	>20 lbin / 100% cohesion	>7 lbin / 100% cohesion
		Hardness, Shore A	ASTM D2240 or SAE AS5127/1	> 35 pts	

Description	Spec/Product	Test	Test Procedure	Evaluation Criteria	
				Test Requirements @ 42 Days	Test Requirement @ 70 Days
		Tensile Strength	ASTM D412 or SAE AS5127/1	> 50 psi	
		Elongation	ASTM D412 or SAE AS5127/1	> 200%	
		Volume Swell	ASTM D471 or SAE AS5127/1	-10% to 10%	
Polysulfide	SAE-AMS-3276 Type 2, Class B-2	Peel Strength	SAE AS5127/1	>20 lbin / 100% cohesion	>20 lbin / 100% cohesion
		Hardness, Shore A	ASTM D2240 or SAE AS5127/1	> 35 pts	
		Tensile Strength	ASTM D412 or SAE AS5127/1	> 125 psi	
		Elongation	ASTM D412 or SAE AS5127/1	> 100%	
		Volume Swell	ASTM D471 or SAE AS5127/1	≤15%	

Description	Spec/Product	Test	Test Procedure	Evaluation Criteria	
				Test Requirements @ 42 Days	Test Requirement @ 70 Days
Polythioether	SAE-AMS-3277 Type 2, Class B-2	Peel Strength	SAE AS5127/1	>20 lbin / 100% cohesion	>20 lbin / 100% cohesion
		Hardness, Shore A	ASTM D2240 or SAE AS5127/1	> 30 pts	
		Tensile Strength	ASTM D412 or SAE AS5127/1	> 125 psi	
		Elongation	ASTM D412 or SAE AS5127/1	> 100%	
		Volume Swell	ASTM D471 or SAE AS5127/1	≤25%	
Polysulfide, Lightweight	SAE-AMS-3281 Type 1, Class B-1/2	Peel Strength	SAE AS5127/1	>20 lbin / 100% cohesion	>20 lbin / 100% cohesion
		Hardness, Shore A	ASTM D2240 or SAE AS5127/1	> 35 pts	
		Tensile Strength	ASTM D412 or SAE AS5127/1	> 125 psi	

Description	Spec/Product	Test	Test Procedure	Evaluation Criteria	
				Test Requirements @ 42 Days	Test Requirement @ 70 Days
		Elongation	ASTM D412 or SAE AS5127/1	> 100%	
		Volume Swell	ASTM D471 or SAE AS5127/1	≤20%	
Polysulfide, Lightweight	SAE-AMS-3281 Type 2, Class B-1/2	Peel Strength	SAE AS5127/1	>20 lbin / 100% cohesion	>20 lbin / 100% cohesion
		Hardness, Shore A	ASTM D2240 or SAE AS5127/1	> 35 pts	
		Tensile Strength	ASTM D412 or SAE AS5127/1	> 125 psi	
		Elongation	ASTM D412 or SAE AS5127/1	> 100%	
		Volume Swell	ASTM D471 or SAE AS5127/1	≤20%	
Polysulfide, Low	SAE-AMS-83318 Class B-1/6	Peel Strength	SAE AS5127/1	>10 lbin / 100% cohesion	>10 lbin / 100% cohesion

Description	Spec/Product	Test	Test Procedure	Evaluation Criteria	
				Test Requirements @ 42 Days	Test Requirement @ 70 Days
Temperature Curing		Hardness, Shore A	ASTM D2240 or SAE AS5127/1	> 35 pts	
		Tensile Strength	ASTM D412 or SAE AS5127/1	> 180 psi	
		Elongation	ASTM D412 or SAE AS5127/1	> 100%	
		Volume Swell	ASTM D471 or SAE AS5127/1	Report Change	
Polysulfide, Low Adhesion	SAE-AMS-3284 Type 2, Class B-2	Hardness, Shore A	ASTM D2240	Report Change	
		Tensile Strength	ASTM D412	Report Change	
		Elongation	ASTM D412	Report Change	
		Volume Swell	ASTM D471	Report Change	
Polysulfide Manganese Cured	SAE-AMS-8802 Type 2, Class A-2	Peel Strength	SAE AS5127/1	>20 lbin / 100% cohesion	>7 lbin / 100% cohesion
		Hardness, Shore A	ASTM D2240 or	> 35 pts	

Description	Spec/Product	Test	Test Procedure	Evaluation Criteria	
				Test Requirements @ 42 Days	Test Requirement @ 70 Days
			SAE AS5127/1		
		Tensile Strength	ASTM D412 or SAE AS5127/1	> 50 psi	
		Elongation	ASTM D412 or SAE AS5127/1	> 200%	
		Volume Swell	ASTM D471 or SAE AS5127/1	-10% to 10%	

Table 3 – Pass/Fail Criteria of Buna-N Topcoat

Description	Spec/Product	Test	Test Procedure	Evaluation Criteria
				7 days @ 60 °C (140 °F)
Sealing Compound Topcoat "Slosh Coat"	SAE-AMS-4383	Peel Strength	AMS-S-4383 4.6.8	22 psi from the MIL-S-8802 layer
				30 psi from the aluminum

24.4. Task 4 – Elastomeric testing (o-rings)

Table 4 – Pass/Fail Criteria of Elastomeric O-Rings

Spec	Test	Evaluation Criteria Test Requirements
SAE-AMS-P-5315	Hardness, Shore M	± 10 pts from unaged
	Tensile Strength	> 1000 psi
	Elongation	> 200%
	Compression Set	< 50%
	Volume Swell	0% to 15%
SAE-AMS-R- 25988, Type I, Class 1, Grade 70	Hardness, Shore M	- 20 pts from unaged
	Tensile Strength	> 500 psi
	Elongation	> 125%
	Compression Set	< 50%
	Volume Swell	0% to 15%
SAE-AMS-7379	Hardness, Shore M	± 5%
	Tensile Strength	> 1000 psi
	Elongation	> 155%
	Compression Set	< 50%
	Volume Swell	0% to 10%
SAE-AMS-7276	Hardness, Shore M	± 5 pts from unaged
	Tensile Strength	> 1000 psi
	Elongation	> 150%
	Compression Set	< 50%
	Volume Swell	0% to 10%
SAE-AMS-R- 83485 Type I	Hardness, Shore M	± 5 pts from unaged
	Tensile Strength	> 1000 psi
	Elongation	> 150%
	Compression Set	< 40%
	Volume Swell	0% to 10%

24.5. Task 5 – Paint testing

1) No loss of adhesion greater than that of the 100LL exposed panel when tested in compliance with ASTM D3359 with the exception of cutting the "X" before exposure rather than after. This is comparable to a scratch in the paint.

2) No staining greater than that of the 100LL. Staining determined to be greater than 100LL will be reviewed by the TAC for degree of concern.

24.6. Task 6 – Fabric testing

Due to the structural requirements of a fabric covered structure, any loss of fabric system integrity is critical and unacceptable.

1) No loss of tensile strength greater than that of the 100LL exposed fabric when tested in accordance with ASTM D5035. This includes the attached seam, the unattached seam, and the open area.

2) No loss of adhesion greater than that of the 100LL exposed seam, either at the seam glued to the support structure or at the unsupported seam.

3) No loss of cross-linking greater than that of the 100LL exposed fabric. Loss of cross-linking may be indicated by removal of the coating when rubbed with a cotton cloth, or by cracking, bubbling, or other visible damage to the coating.

24.7. Task 7 – Distribution hose testing

1) All results are reported comparatively. Changes in volume, density, weight, and hardness should be within 10 % of the 100LL results or the repeatability of the test, whichever is larger. Results greater than 10% shall be noted for evaluation.

2) No loss of adhesion greater than that of the 100LL exposed specimens when tested in compliance with ASTM D413.

3) After 16 weeks, any propensity for permeation of the fuel through the hose surface observed as fluid loss without leakage, should be equivalent to or less than 100LL losses.

4) During proof testing, there should be no leakage, distortion of the hose, loss of fittings, or other indication of structural failure.

24.8. Task 8 – Composite resin and fabric

24.8.1. Initial screening test of neat resin and adhesives

For initial screening testing of neat resin and adhesive, changes in weight, density, and glass transition temperature before and after fluid exposure shall be compared. If the amount of change in a property is statistically different and greater than 10%, from the 100LL exposed specimens, especially when data is reviewed as a group, the material shall be considered compromised and considered a fail.

24.8.2. Physical property testing of finished composites

For materials tested as finished composite systems, changes in median hardness, tensile/elongation, v-notch, or short beam properties that are statistically different and greater than 10%, from the 100LL exposed specimens, shall be considered a fail.

24.9. Task 9 – Distribution fuel filters/coalescers

24.9.1. Housings

Housings should show no more response to the condition of the seals, paint, and metal housing than that caused by 100LL. Staining is of concern due to the possibility of interpreting the condition as corrosion (rust). Removal or lifting of paint is of concern related to a loss of surface protection to the housing.

24.9.2. Filter cartridges

Filter cartridges shall show no greater response related to changes in dimension, distortion of filter media, or changes in seal condition than that experienced by 100LL exposure. Distortion may cause cartridges to “jam” in the filter housing, bursting of the cartridge, or a loss of filtration capability. Losses in adhesion of the filter media adhesives may result in failure of the pleated filter structure, resulting in a loss of filtration capability.

Changes in the water reaction or surface tension of the fuel following exposure that are greater than those experienced when exposed to 100LL suggest extraction of materials from the filter cartridge which may indicate incompatibility of the materials and/or loss of filtration capability.

Greater filter material migration following exposure to the test fuel as compared to those exposed to 100LL suggests media incompatibility of the materials and/or loss of filtration capability.

24.9.3. Coalescer cartridges

Coalescer cartridges shall show no greater response related to seal condition than that experienced by 100LL exposure.

Changes in the water reaction or surface tension of the fuel following exposure that are greater than those experienced when exposed to 100LL suggest extraction of materials from the filter cartridge which may indicate incompatibility of the materials and/or loss of coalescence capability.

Greater material migration following exposure to the test fuel as compared to 100LL suggests media incompatibility of the materials.

24.10. Task 10 – Vendor supplied materials

No pass fail criteria are provided. Evaluation and assessment are under the purview of the individual equipment manufacturers.

24.11. Task 11 – Wing tank testing

No pass fail criteria are provided. Evaluation and assessment are under the purview of the individual airframe manufacturers.

24.12. Task 12 – Grease resistance

24.12.1. Grease solubility

Grease exposed to Test Fluid III shall have a solubility percent by weight maximum of 20 %. If the average solubility of the 100LL is greater than 20%, the average test fluid results may be greater than 20% but shall be less than the 100LL solubility.

24.12.2. Grease condition

The grease shall demonstrate no degradation following fluid exposure. The adhesion of the grease to the aluminum shall not be weakened.

25Test personnel

The testing source shall identify a single POC for conduct of this testing. This POC shall be equivalent to a Test Director who shall have the authority for oversight and supervision of those conducting the test. The identified POC shall have responsibility during the test for decisions regarding executing and integrity of the test. This local POC for the testing shall have the FAA point of contact clearly identified and contact information available.

The local designated POC is not a FAA designated representative and does not have authority to witness testing for the FAA. While the FAA may choose to identify this person as a designated representative, this identification as such is solely at the discretion of the FAA. Any identification of the POC as the designated FAA representative for the purposes of witnessing tests must be made prior to any testing occurring.

26 Test results report

Objective of the testing specified is to generate data supporting a fuel formulator's participation in the FAA PAFI testing program with the intent of demonstration that the compatibility of materials deemed sensitive to fuel formulations remain within acceptable limits for the use of the offered fuels. The report documenting the test results pursuant to this Test Plan shall include the supporting data, observations, test articles, and fuel certifications. It shall also include the identification of test equipment used, and evidence of equipment calibration or validation as appropriate. A table showing graphically the test results, compliance to the pass/fail criteria, and the actual test results shall be provided.

27 References

In addition to the reference material of Section 5`, the following references are related to the testing described.

1) ASTM D910, "Standard Specification for Aviation Gasoline"
2) ASTM D4306 "Standard Practice for Aviation Fuel Sample Containers for Tests Affected by Trace Contaminants"
3) ASTM D5687 "Standard Guide for Preparation of Flat Composite Panels with Processing Guidelines for Specimen Preparation"
4) PAFI-FSP-001 "PAFI Phase II Fuel Sampling Plan"
5) FAA UAT ARC Final Report, dated 17 February 2012.

http://www.faa.gov/about/initiatives/avgas/archive/2012-10-05

6) EI-1550 "Handbook on equipment used for the maintenance and delivery of clean aviation fuel"
7) EI-1581 "Specifications and laboratory qualification procedures for aviation fuel filter/water separators"

24) – END OF TEXT –

28 Appendices

A Appendix A – Test fuel CoA requirements

FOR REFERENCE ONLY. PER THE SOW, FAA IS RESPONSIBLE FOR ALL FUEL ANALYSIS

Note that this information is required for the candidate fuel, as well as for any MS100LL and FBO100LL fuels that are used during the testing except as noted.

Property	Test Method	Comment
MON	D2700	
SC PN	D909	100LL only
Lead Content	D5059	For leaded fuels and for unleaded fuels to demonstrate the fuel is in fact unleaded
Density	D4052	
Distillation Curve	D86	
Vapor Pressure	D5191	
Freeze Point	D2386	
Sulfur Content	D2622 or D5453	
Net Heat of Combustion	D4809	
Hydrogen Content	D7171 or D5291	
Oxygen Content	D5622	If fuel contains oxygen.
Corrosion, Copper Strip	D130	
Oxidation	D873	
Water Reaction	D1094	

Property	Test Method	Comment
Electrical Conductivity	D2624	
Water Content	D6304	
Acid Number	D974	
Base Number	D2896	
Existent Gum	D381	
Viscosity	D445	
Manganese Content	D5059	Any manganese containing fuel.
Benzene, Toluene	D3606	Report in mass and volume %
Composition, mass %	D6733	

B Appendix B – Flow path of testing requirements

Within the specified test methods and pass/fail criteria, there is a flow down of requirements through a series of documents. The following is an attempt to provide the document user with an understanding of these requirements.

MIL-DTL-6000

§3.5.8.3 →	§4.8.3.3, ΔVol →	ASTM D380 →	§22 →	ASTM D471 →	§12 or §13
Pass/fail ≤85%	Testing req'ts	Hose Testing	ΔV	Fluid Exposure	Calc's
§3.5.9.1 →	§4.8.9.1,ΔTensile →	ASTM D471 →	§16 →	ASTM D412 →	§12
Pass/fail ≥45%	Fuel B, test req'ts	Fluid Exposure	ΔTen	Tensile test	Calc's
§3.5.10.3 →	§4.8.10.3,ΔElong →	ASTM D471 →	§16 →	ASTM D412 →	§12
Pass/fail ≥50%	Fuel B, test req'ts	Fluid Exposure	ΔE	Elong test	Calc's

O-ring testing – MIL-HDBK-510

MIL-HDBK-510A, Part 2, Table DII

Test exposure requirements modified by this Test Plan

O-ring ΔDurometer → ASTM D2240, Shore M, Type 3

Testing req'ts

O-ring ΔTensile →	ASTM D1414 →	§8.3 →	ASTM D412	§8.4.2.1
Testing req'ts	Rubber O-rings	ΔT	Tensile tester	Calc's
O-ring ΔElong →	ASTM D1414 →	§8.3 →	ASTM D412	§8.4.2.2
Testing req'ts	Rubber O-rings	ΔE	Tensile tester	Calc's
O-ring Compression →	ASTM D1414 →	§10, §11 →	ASTM D395,Method B	§12
Testing req'ts	Rubber O-rings		Compression set	
		§7	ASTM D3767,Proc A	§9.1
			Measure Dimensions	O-ring
		§14	ASTM D471,	
			Fluid Exposure	

Sealants

All the sealant standards specify the following test methods for determining measured values.

Test exposure requirements modified by PAFI Materials Test Plan

Hardness	see	ASTM D2240
Tensile/Elongation	see	ASTM D412, §12
Volume Swell	see	ASTM D471, §12 or §13

C Appendix C – Production of AS5127 flow sheets

The following is extracted from AS5127/1C, Aerospace Standard Test Methods for Aerospace Sealants, Two-Component Synthetic Rubber Compounds. Section 7.7 Tensile Strength and Elongation states the following:

"A 0.125 inch ± 0.015 inch (3.18 mm ± 0.4 mm) thick sheet of sealing compound shall be prepared by pressing freshly mixed sealing compound between two release sheets or plates (e.g., low density polyethylene, Teflon, release paper, or metal panels), by injecting into a closed mold, or by an alternate method as specified in the applicable material specification. Critical to any method is avoiding air entrapment or voids which later compromise specimen integrity. The sealing compound shall be cured at standard conditions in accordance with AS5127 (4), for the time defined in the applicable material specification."

Any flow sheets prepared to meet these criteria are acceptable for use as flow sheets for the production of tensile/elongation specimens and for the preparation of specimens to be used for measuring volume swell.

D Appendix D – Integral fuel tank sealants

Testing involves representatives from the following ten types of sealants. Specific materials which have been identified for testing to each specification are provided in the PAFI Materials Test Matrix – Contract version.

D-1 Full Compatibility Materials

1) SAE-AMS-S-8802 Type 1, Class B-2

   Dichromate cured polysulfide

   - PPG PR1422

2) SAE-AMS-S-8802 Type 2, Class B-2

   Manganese cured polysulfide

   - PPG PR1440

   - Royal WS-8020RC B-2

3) SAE-AMS-3276 Type 2, Class B-2

   Polysulfide

   - Royal WS-8020RC B-2

4) SAE-AMS-3277 Type 2, Class B-2

   Polythioether

   - PPG PR2001 B-2

5) SAE-AMS-3281 Type **1**, **Class B-1/2**

Lightweight polysulfide

   - PPG PR1776M B-1/2

   - Royal WS-8030 B-1/2

6) SAE-AMS 3281, Type **2**, Class B-1/2

   Lightweight Polysulfide

   - PPG PR2007, Class B-1/2

- Royal WS-8032, Class B-1/2

7) SAE-AMS-3284 Type 2, Class B2

   Low Adhesion polysulfide

   - PPG PR-1773 Class B2

8) SAE-AMS-83318, [No Type], Class B-1/6

   Low temperature curing, quick repair polysulfide

   - PPG PS860 B-1/6
   - 3M AC-250 B1/6

9) AMS S-8802, Type 2, Class A2

   Polysulfide

   - PPG P/S 890 A-2

10) SAE-AMS-3284 Type 2, Class B2

    Buna-N fuel tank topcoat; “Slosh Coat”

    - PPG PR-1005-L

Table D-1: Polysulfide Sealant Test Matrix (reference only, see PAFI Materials Test Matrix – Contract version for final list)

Description	Sample Size	Number of Samples	Temp.(°C)	Duration (Days)	Test	Test Method	Test Plan/ ASTM Standard No.
Polysulfide Sealants							
PR-1773 B-2 Polysulfide AMS 3284	Flow Sheet, Dumbbell D412, Die C	5	60	42	Soak→ Tensile/elongation	D412, Section 12	PAFI-MTP-002
	Flow Sheet, 1" X 2"	5	60	42	Soak→ Durometer—Shore A	D2240	PAFI-MTP-002
					Soak→ Density change	D471	PAFI-MTP-002
					Soak→ Volume swell/dimensional change	D471	PAFI-MTP-002
					Soak→ Visual inspection	None	PAFI-MTP-002
P/S 890 A-2 Polysulfide, AMS 8802	Flow Sheet, Dumbbell D412, Die C	5	60	42	Soak→ Tensile/elongation	D412, Section 12	D7826-22, PAFI-MTP-002
	Flow Sheet, 1" X 2"	5	60	42	Soak→ Durometer—Shore A	D2240	D7826-22, PAFI-MTP-002
					Soak→ Density change	D471	D7826-22, PAFI-MTP-002
					Soak→ Volume swell/dimensional change	D471	D7826-22, PAFI-MTP-002
					Soak→ Visual inspection	None	D7826-22, PAFI-MTP-002
P/S 890 A-2 Polysulfide, AMS 8802, 2 aluminum panels (each), AMS4045, sulfuric acid anodized in accordance with AS5127 (6.3) and coated with AMS-C-27725 Type 2.	Sample Size per PAFI-MTP-002, Section 14.3.	12	60	14, 28, 42, 70	Soak→ Peel Strength, Note two exposure tests for peel strength. A standard 42-day exposure with peel strength tests at day 14, 28, and 42. Additionally, a peel strength test following an exposure in both 100LL for 70 days and the test fuel for 70 days.	SAE AS5127/1	D7826-22, PAFI-MTP-002
PR 1422 Polysulfide AMS-S-8802 Type 1, Class B-2,	Flow Sheet, Dumbbell D412, Die C	5	60	42	Soak→ Tensile/elongation	D412, Section 12	PAFI-MTP-002
	Flow Sheet, 1" X 2"	5	60	42	Soak→ Durometer—Shore A	D2240	PAFI-MTP-002
					Soak→ Density change	D471	PAFI-MTP-002
					Soak→ Volume swell/dimensional change	D471	PAFI-MTP-002
					Soak→ Visual inspection	None	PAFI-MTP-002

Description	Sample Size	Number of Samples	Temp.(°C)	Duration (Days)	Test	Test Method	Test Plan/ ASTM Standard No.
PR 1422 Polysulfide AMS-S-8802 Type 1, Class B-2, See AS5127 §8.1.1	Sample Size per PAFI-MTP-002, Section 14.3.	12	60	14, 28, 42, 70	Soak→ Peel Strength, Note two exposure tests for peel strength. A standard 42-day exposure with peel strength tests at day 14, 28, and 42. Additionally, a peel strength test following an exposure in both 100LL for 70 days and the test fuel for 70 days.	SAE AS5127/1	PAFI-MTP-002
PR-1440B Polysulfide AMS-S-8802 Type 2, Class B-2	Flow Sheet, Dumbbell D412, Die C	5	60	42	Soak→ Tensile/elongation	D412, Section 12	PAFI-MTP-002
	Flow Sheet, 1" X 2"	5	60	42	Soak→ Durometer—Shore A	D2240	PAFI-MTP-002
					Soak→ Density change	D471	PAFI-MTP-002
					Soak→ Volume swell/dimensional change	D471	PAFI-MTP-002
					Soak→ Visual inspection	None	PAFI-MTP-002
PR-1440B Polysulfide AMS-S-8802 Type 2, Class B-2, 2 aluminum panels (each), AMS4045, sulfuric acid anodized in accordance with AS5127 (6.3) and coated with AMS-C-27725 Type 2.	Sample Size per PAFI-MTP-002, Section 14.3.	12	60	14, 28, 42, 70	Soak→ Peel Strength, Note two exposure tests for peel strength. A standard 42-day exposure with peel strength tests at day 14, 28, and 42. Additionally, a peel strength test following an exposure in both 100LL for 70 days and the test fuel for 70 days.	SAE AS5127/1	PAFI-MTP-002
PR-2001B Polythioether AMS-3277 Type 2, Class B-2	Flow Sheet, Dumbbell D412, Die C	5	60	42	Soak→ Tensile/elongation	D412, Section 12	PAFI-MTP-002
	Flow Sheet, 1" X 2"	5	60	42	Soak→ Durometer—Shore A	D2240	PAFI-MTP-002
					Soak→ Density change	D471	PAFI-MTP-002
					Soak→ Volume swell/dimensional change	D471	PAFI-MTP-002
					Soak→ Visual inspection	None	PAFI-MTP-002
PR-2001B Polythioether AMS-3277 Type 2, Class B-2, 2 Aluminum alloy, AMS4045, panels, sulfuric acid anodized in accordance with AS5127 (6.3) and coated with AMS-C-27725.	Sample Size per PAFI-MTP-002, Section 14.3.	12	60	14, 28, 42, 70	Soak→ Peel Strength, Note two exposure tests for peel strength. A standard 42-day exposure with peel strength tests at day 14, 28, and 42. Additionally, a peel strength test following an exposure in both 100LL for 70 days and the test fuel for 70 days.	SAE AS5127/1	PAFI-MTP-002
Aerospace Sealant AC-350 Polysulfide, AMS 3276 Type 2, Class B-2	Flow Sheet, Dumbbell D412, Die C	5	60	42	Soak→ Tensile/elongation	D412, Section 12	PAFI-MTP-002

Description	Sample Size	Number of Samples	Temp.(°C)	Duration (Days)	Test	Test Method	Test Plan/ ASTM Standard No.
	Flow Sheet, 1" X 2"	5	60	42	Soak→ Durometer—Shore A	D2240	PAFI-MTP-002
					Soak→ Density change	D471	PAFI-MTP-002
					Soak→ Volume swell/dimensional change	D471	PAFI-MTP-002
					Soak→ Visual inspection	None	PAFI-MTP-002
Aerospace Sealant AC-350 Polysulfide, AMS 3276 Type 2, Class B-2, 2 Aluminum panels, AMS4045, sulfuric acid anodized in accordance with AS5127 (6.3) and coated with AMS-C-27725 Type 2.	Sample Size per PAFI-MTP-002, Section 14.3.	12	60	14, 28, 42, 70	Soak→ Peel Strength, Note two exposure tests for peel strength. A standard 42-day exposure with peel strength tests at day 14, 28, and 42. Additionally, a peel strength test following an exposure in both 100LL for 70 days and the test fuel for 70 days.	SAE AS5127/1	PAFI-MTP-002
PR1776M or AC-370 B-1/2 Polysulfide, AMS-3281 Type 1, Class B-1/2	Flow Sheet, Dumbbell D412, Die C	5	60	42	Soak→ Tensile/elongation	D412, Section 12	PAFI-MTP-002
	Flow Sheet, 1" X 2"	5	60	42	Soak→ Durometer—Shore A	D2240	PAFI-MTP-002
					Soak→ Density change	D471	PAFI-MTP-002
					Soak→ Volume swell/dimensional change	D471	PAFI-MTP-002
					Soak→ Visual inspection	None	PAFI-MTP-002
PR1776M or AC-370 B-1/2 Polysulfide, AMS-3281 Type 1, Class B-1/2, 2 aluminum test panels chemically treated according to AS5127 (6.2) shall be used. After conversion coating, the sealing compound shall be applied to the peel strength test panels as described in AS5127/1 (8.1.1).	Sample Size per PAFI-MTP-002, Section 14.3.	12	60	14, 28, 42, 70	Soak→ Peel Strength, Note two exposure tests for peel strength. A standard 42-day exposure with peel strength tests at day 14, 28, and 42. Additionally, a peel strength test following an exposure in both 100LL for 70 days and the test fuel for 70 days.	SAE AS5127/1	PAFI-MTP-002
PR1776M or AC-370 B-1/2 Polysulfide, AMS-3281 Type 1, Class B-1/2, 2 FRC (Toray Advanced Composites BT250E-1/E-glass) test panels shall be grit blasted with aluminum oxide and/or abrasion with aluminum oxide sand paper. After abrading the surfaces, the sealing compound shall be applied to the peel strength test panels as described in AS5127/1 (8.1.1).	Sample Size per PAFI-MTP-002, Section 14.3.	12	60	14, 28, 42, 70	Soak→ Peel Strength, Note two exposure tests for peel strength. A standard 42-day exposure with peel strength tests at day 14, 28, and 42. Additionally, a peel strength test following an exposure in both 100LL for 70 days and the test fuel for 70 days.	SAE AS5127/1	PAFI-MTP-002

Description	Sample Size	Number of Samples	Temp.(°C)	Duration (Days)	Test	Test Method	Test Plan/ ASTM Standard No.
PR-1005-L Buna-N fuel tank topcoat; "Slosh Coat", AMS-S-4383	AMS-QQ-A-250 Aluminum panel, 0.032" x 3" x 6", with 0.125" thick polysulfide sealing compound qualified to AMS-S-8802, 3 brush coats of top coat followed by 1 heavy brush coat	3	60	7	Soak→ Peel Strength	AMS-S-4383 4.6.8	PAFI-MTP-002
	AMS4059 Aluminum panel, 0.032" X 1" X 5" with top coat film thickness of 0.0005" to 0.0030".	3	25	2	Soak→ Non-volatile gum content→ Stoved gum residue	D381, Air-Jet, PAFI-MTP-002 Section 14.5.3	PAFI-MTP-002
AMS-S-83318 Class B (3M AC-250 or PPG PS860)	Flow Sheet, Dumbbell D412, Die C	5	60	42	Soak→ Tensile/elongation	D412, Section 12	PAFI-MTP-002
	Flow Sheet, 1" X 2"	5	60	42	Soak→ Durometer—Shore A	D2240	PAFI-MTP-002
					Soak→ Density change	D471	PAFI-MTP-002
					Soak→ Volume swell/dimensional change	D471	PAFI-MTP-002
					Soak→ Visual inspection	None	PAFI-MTP-002
AMS-S-83318 Class B (3M AC-250 or PPG PS860), 2 AMS4045 aluminum test panels chemically treated according to AS5127 (6.2) shall be used. After conversion coating, the sealing compound shall be applied to the peel strength test panels as described in AS5127/1 (8.1.1).	Sample Size per PAFI-MTP-002, Section 14.3.	12	60	14, 28, 42, 70	Soak→ Peel Strength, Note two exposure tests for peel strength. A standard 42-day exposure with peel strength tests at day 14, 28, and 42. Additionally, a peel strength test following an exposure in both 100LL for 70 days and the test fuel for 70 days.	SAE AS5127/1	PAFI-MTP-002

Table D-2 Brand Name Validation Materials (reference only, see PAFI Materials Test Matrix – Contract version for final list)

1. Flamemaster 135
2. Flamemaster 3330
3. Flamemaster CS 135
4. Flamemaster CS 3204
5. Flamemaster CS-5500
6. Chemetal MC-780
7. PPG P/S 881
8. PPG PR 1426
9. PPG PR 1750
10. PPG PR 1773
11. PPG PR 1776
12. PPG PR 1776M Low weight
13. PPG PR 1828
14. RoyalWS8010
15. RoyalWS8020 RC
16. RoyalWS8032

Table D-2: Polysulfide Sealant Validation Test Matrix (reference only, see PAFI Materials Test Matrix – Contract version for final list)

Description	Sample Size	Number of Samples	Temp.(°C)	Duration (Days)	Test	Test Method
Polysulfide Sealants – Brand Name Validation List						
Flamemaster CS135	Flow Sheet, Dumbbell D412, Die C	1	25, 60	28	Soak→ Tensile/elongation	D412, Section 12
	Flow Sheet, 1" X 2"	1	25, 60	28	Soak→ Durometer—Shore A	D2240
					Soak→ Density change	D471
					Soak→ Volume swell/dimensional change	D471
					Soak→ Visual inspection	None
Flamemaster 3330	Flow Sheet, Dumbbell D412, Die C	1	25, 60	28	Soak→ Tensile/elongation	D412, Section 12
	Flow Sheet, 1" X 2"	1	25, 60	28	Soak→ Durometer—Shore A	D2240
					Soak→ Density change	D471
					Soak→ Volume swell/dimensional change	D471
					Soak→ Visual inspection	None
Flamemaster CS500	Flow Sheet, Dumbbell D412, Die C	1	25, 60	28	Soak→ Tensile/elongation	D412, Section 12
	Flow Sheet, 1" X 2"	1	25, 60	28	Soak→ Durometer—Shore A	D2240
					Soak→ Density change	D471
					Soak→ Volume swell/dimensional change	D471
					Soak→ Visual inspection	None
Chemetal MC-780	Flow Sheet, Dumbbell D412, Die C	1	25, 60	28	Soak→ Tensile/elongation	D412, Section 12
	Flow Sheet, 1" X 2"	1	25, 60	28	Soak→ Durometer—Shore A	D2240
					Soak→ Density change	D471
					Soak→ Volume swell/dimensional change	D471
					Soak→ Visual inspection	None
PPG P/S 881	Flow Sheet, Dumbbell D412, Die C	1	25, 60	28	Soak→ Tensile/elongation	D412, Section 12

	Flow Sheet, 1" X 2"	1	25, 60	28	Soak→ Durometer—Shore A	D2240
					Soak→ Density change	D471
					Soak→ Volume swell/dimensional change	D471
					Soak→ Visual inspection	None
PPG PR 1426	Flow Sheet, Dumbbell D412, Die C	1	25, 60	28	Soak→ Tensile/elongation	D412, Section 12
	Flow Sheet, 1" X 2"	1	25, 60	28	Soak→ Durometer—Shore A	D2240
					Soak→ Density change	D471
					Soak→ Volume swell/dimensional change	D471
					Soak→ Visual inspection	None
PPF PR 1750	Flow Sheet, Dumbbell D412, Die C	1	25, 60	28	Soak→ Tensile/elongation	D412, Section 12
	Flow Sheet, 1" X 2"	1	25, 60	28	Soak→ Durometer—Shore A	D2240
					Soak→ Density change	D471
					Soak→ Volume swell/dimensional change	D471
					Soak→ Visual inspection	None
PPG PR 1773	Flow Sheet, Dumbbell D412, Die C	1	25, 60	28	Soak→ Tensile/elongation	D412, Section 12
	Flow Sheet, 1" X 2"	1	25, 60	28	Soak→ Durometer—Shore A	D2240
					Soak→ Density change	D471
					Soak→ Volume swell/dimensional change	D471
					Soak→ Visual inspection	None
PPG PR 1776	Flow Sheet, Dumbbell D412, Die C	1	25, 60	28	Soak→ Tensile/elongation	D412, Section 12
	Flow Sheet, 1" X 2"	1	25, 60	28	Soak→ Durometer—Shore A	D2240
					Soak→ Density change	D471
					Soak→ Volume swell/dimensional change	D471
					Soak→ Visual inspection	None
PPG PR 1776 M	Flow Sheet, Dumbbell D412, Die C	1	25, 60	28	Soak→ Tensile/elongation	D412, Section 12
	Flow Sheet, 1" X 2"	1	25, 60	28	Soak→ Durometer—Shore A	D2240
					Soak→ Density change	D471
					Soak→ Volume swell/dimensional change	D471
					Soak→ Visual inspection	None

PPG PR1828	Flow Sheet, Dumbbell D412, Die C	1	25, 60	28	Soak→ Tensile/elongation	D412, Section 12
	Flow Sheet, 1" X 2"	1	25, 60	28	Soak→ Durometer—Shore A	D2240
					Soak→ Density change	D471
					Soak→ Volume swell/dimensional change	D471
					Soak→ Visual inspection	None
Royal WS8010	Flow Sheet, Dumbbell D412, Die C	1	25, 60	28	Soak→ Tensile/elongation	D412, Section 12
	Flow Sheet, 1" X 2"	1	25, 60	28	Soak→ Durometer—Shore A	D2240
					Soak→ Density change	D471
					Soak→ Volume swell/dimensional change	D471
					Soak→ Visual inspection	None
Royal WS 8020 RC	Flow Sheet, Dumbbell D412, Die C	1	25, 60	28	Soak→ Tensile/elongation	D412, Section 12
	Flow Sheet, 1" X 2"	1	25, 60	28	Soak→ Durometer—Shore A	D2240
					Soak→ Density change	D471
					Soak→ Volume swell/dimensional change	D471
					Soak→ Visual inspection	None
Royal WS8032	Flow Sheet, Dumbbell D412, Die C	1	25, 60	28	Soak→ Tensile/elongation	D412, Section 12
	Flow Sheet, 1" X 2"	1	25, 60	28	Soak→ Durometer—Shore A	D2240
					Soak→ Density change	D471
					Soak→ Volume swell/dimensional change	D471
					Soak→ Visual inspection	None

E Appendix E – Additional materials as O-rings

O-rings need to be purchased to a specified durometer. The required durometer is listed below for each type of O-ring.

1) SAE O-ring Standard: AS29513C, Packing, Preformed, Hydrocarbon Fuel Resistant "O" Ring
   O-ring Material: AMS-P-5315, Rubber: Acrylonitrile-Butadiene (NBR) Fuel Resistant 60 – 70 Type A Hardness

   <u>65A durometer</u>

   - SAE O-ring P/N: AS29513-210, MS29513-210
     - Example Manufacturer P/N: Marco Rubber P/N M1002-210
   - SAE O-ring P/N: AS29513-226, MS29513-226
     - Example Manufacturer P/N: Marco Rubber P/N M1002-226

2) SAE O-ring Standard: AS3209C, Packing, Preformed – AMS7276 "O" Ring O-ring Material: AMS7276J, Rubber: Fluorocarbon (FKM) High Temperature – Fluid resistant Low Compression Set / 70 to 80 Type A Hardness for Seals in Fuel Systems and Specific Engine Oil Systems

   75A durometer

   - SAE O-ring P/N: AS3209-210
     - Example Manufacturer P/N: Marco Rubber P/N V1002-210
   - SAE O-ring P/N: AS3209-226;
     - Example Manufacturer P/N: Marco Rubber P/N V1002-226

3) SAE O-ring Standard: AS5729B, O-Ring Molded from AMS7379 Fluorocarbon (FKM) Material
   O-ring Material: AMS7379A, Rubber: Fluorocarbon Elastomer (FKM) Low Temperature Sealing Tg -40 °F (-40 °C) 70 to 80 Type 'A' Hardness for Elastomeric Seals in Aircraft Engine Oil, Fuel and Hydraulics Systems

   75A durometer

   - SAE O-ring P/N: AS5729-210
     - Example Manufacturer P/N: Marco Rubber P/N V1163-210
   - SAE O-ring P/N: AS5729-226

        - Example Manufacturer P/N: Marco Rubber P/N V1163-226

4) SAE O-ring Standard: AS83485B, O-Ring Molded from AMS7287 Material Material: Fluorocarbon Elastomer (FKM) High Temperature/HTS Oil Resistant/Fuel Resistant Low Compression Set/70 to 80 Hardness, Low Temperature Tg -22 °F (-30 °C), for Seals in Oil/Fuel/Specific Hydraulic Systems (Supersedes AMS-R-83485 Type I), AKA Viton GTL™

   75A durometer

   - SAE O-ring P/N: M83485/1-210
     - Example Manufacturer P/N: Marco Rubber P/N V1005-210
   - SAE O-ring P/N: M83485/1-226
     - Example Manufacturer P/N: Marco Rubber P/N V1005-226

5) O-ring Standard: MIL-DTL-25988/1B, Rubber, Fluorosilicone Elastomer, Oil- and Fuel-Resistant, O-Rings, Class 1, Grade 70

   70A durometer, blue

   - SAE O-ring P/N: M25988/1-210
     - Example Manufacturer P/N: Marco Rubber P/N F1001-210
   - SAE O-ring P/N: M25988/1-226
     - Example Manufacturer P/N: Marco Rubber P/N F1001-226

The O-ring size selection is explained in Section 6.5. These sizes provide O-rings in support of testing in Section 15.

Table E-1: O-ring Test Matrix

Description	Sample Size	Number of Samples	Temp.(°C)	Duration (Days)	Test	Test Method	Test Plan/ ASTM Standard No.
O-Rings							
BunaN (Nitrile) SAE-AMS-P-5315	O-Ring (2 1/4" OD)	5	71	14, 28, 42	Soak→ Tensile/elongation	D1414	PAFI-MTP-002
			71	14, 28, 42	Soak→ Durometer—Shore M	D2240	PAFI-MTP-002
			71	14, 28, 42	Soak→ Density change	D471	PAFI-MTP-002
			71	14, 28, 42	Soak→ Volume swell/dimensional change	D471	PAFI-MTP-002
			71	14, 28, 42	Soak→ Visual inspection	None	PAFI-MTP-002
	O- Ring (1" OD)	3	71	14, 28, 42	Soak→ Compression Set	D395	PAFI-MTP-002
Fluorocarbon SAE-AMS-7276	O-Ring (2 1/4" OD)	5	71	14, 28, 42	Soak→ Tensile/elongation	D1414	PAFI-MTP-002

Description	Sample Size	Number of Samples	Temp.(°C)	Duration (Days)	Test	Test Method	Test Plan/ ASTM Standard No.
			71	14, 28, 42	Soak→ Durometer—Shore M	D2240	PAFI-MTP-002
			71	14, 28, 42	Soak→ Density change	D471	PAFI-MTP-002
			71	14, 28, 42	Soak→ Volume swell/dimensional change	D471	PAFI-MTP-002
			71	14, 28, 42	Soak→ Visual inspection	None	PAFI-MTP-002
	O- Ring (1" OD)	3	71	14, 28, 42	Soak→ Compression Set	D395	PAFI-MTP-002
Fluorosilicone SAE-AMS-R- 25988, Type I	O-Ring (2 1/4" OD)	5	71	14, 28, 42	Soak→ Tensile/elongation	D1414	PAFI-MTP-002
			71	14, 28, 42	Soak→ Durometer—Shore M	D2240	PAFI-MTP-002
			71	14, 28, 42	Soak→ Density change	D471	PAFI-MTP-002

Description	Sample Size	Number of Samples	Temp.(°C)	Duration (Days)	Test	Test Method	Test Plan/ ASTM Standard No.
			71	14, 28, 42	Soak→ Volume swell/dimensional change	D471	PAFI-MTP-002
			71	14, 28, 42	Soak→ Visual inspection	None	PAFI-MTP-002
	O- Ring (1" OD)	3	71	14, 28, 42	Soak→ Compression Set	D395	PAFI-MTP-002
Fluorocarbon SAE-AMS-7379	O-Ring (2 1/4" OD)	5	71	14, 28, 42	Soak→ Tensile/elongation	D1414	PAFI-MTP-002
			71	14, 28, 42	Soak→ Durometer—Shore M	D2240	PAFI-MTP-002
			71	14, 28, 42	Soak→ Density change	D471	PAFI-MTP-002
			71	14, 28, 42	Soak→ Volume swell/dimensional change	D471	PAFI-MTP-002
			71	14, 28, 42	Soak→ Visual inspection	None	PAFI-MTP-002

Description	Sample Size	Number of Samples	Temp.(°C)	Duration (Days)	Test	Test Method	Test Plan/ ASTM Standard No.
	O- Ring (1" OD)	3	71	14, 28, 42	Soak→ Compression Set	D395	PAFI-MTP-002
Fluorocarbon SAE-AMS-7287	O-Ring (2 1/4" OD)	5	71	14, 28, 42	Soak→ Tensile/elongation	D1414	PAFI-MTP-002
			71	14, 28, 42	Soak→ Durometer—Shore M	D2240	PAFI-MTP-002
			71	14, 28, 42	Soak→ Density change	D471	PAFI-MTP-002
			71	14, 28, 42	Soak→ Volume swell/dimensional change	D471	PAFI-MTP-002
			71	14, 28, 42	Soak→ Visual inspection	None	PAFI-MTP-002
	O- Ring (1" OD)	3	71	14, 28, 42	Soak→ Compression Set	D395	PAFI-MTP-002

F Appendix F – Paint systems

Table F-1: Paint Systems

Primer	Base Coat	Clear Coat	Manufacturer (s)
1A) Axalta Corlar 13580s Epoxy	Imron AF400	NA	Axalta (Imron)
1B) AN 10P8-11 VOC compliant Epoxy Primer	Imron AF400	NA	AkzoNobel and Axalta (Imron)
2A) Axalta Corlar 13580s Epoxy	Imron AF700	AF740	Axalta (Imron)
2B) AN 10P8-11 VOC compliant Epoxy Primer	Imron AF700	AF740	AkzoNobel and Axalta (Imron)
3A) Axalta Corlar 13580s Epoxy	Imron AF3500	NA	Axalta (Imron)
3B) AN 10P8-11 VOC compliant Epoxy Primer	Imron AF3501	NA	AkzoNobel and Axalta (Imron)
4) Axalta Corlar 13580s Epoxy	Centari 5.10	NA	Axalta
5) High Solids Chrome Hazard Free Epoxy Primer (CM0483787)	Jet Glo Express 840		Sherwin-Williams
6) 10P30-5Y	NA	NA	AkzoNobel
7) 454-4-1 [Fuel tank coating, not paint primer]	NA	NA	ANAC Advanced Coatings

Corlar is the epoxy primer that is part of the Imron recommended system

AN 10P8-11 is the epoxy primer, produced by AkzoNobel and called out by the MTAC materials list

All paint systems to be aviation white

Table F-2: Paint Systems Test Matrix

Description	Sample Size	Number of Samples	Temp.(°C)	Duration	Test	Test Method	Test Plan/ ASTM Standard No.
Paint Systems							
Primer: Axalta Corlar 13580s Epoxy, Base Coat: Imron AF400, 0.040" 2024-T3 aluminum per AMS-QQ-A-250/5B	2" X 4"	5	25	28 Days	Soak→ Adhesion	D3359	PAFI-MTP-002
					Soak→ Hardness	D3363	PAFI-MTP-002
					Soak→ Visual inspection at 14 days and 28 days	None	PAFI-MTP-002
		5		~ 6 Hours	Fuel Drip (per PAFI-MTP-002 Section 16.3) → Visual Inspection	None	PAFI-MTP-002
Primer: AN 10P8-11 VOC compliant Epoxy Primer, Base Coat: Imron AF400, 0.040" 2024-T3 aluminum per AMS-QQ-A-250/5B	2" X 4"	5	25	28 Days	Soak→ Adhesion	D3359	PAFI-MTP-002
					Soak→ Hardness	D3363	PAFI-MTP-002
					Soak→ Visual inspection at 14 days and 28 days	None	PAFI-MTP-002

Description	Sample Size	Number of Samples	Temp.(°C)	Duration	Test	Test Method	Test Plan/ ASTM Standard No.
		5		~ 6 Hours	Fuel Drip (per PAFI-MTP-002 Section 16.3) → Visual Inspection	None	PAFI-MTP-002
Primer: Axalta Corlar 13580s Epoxy, Base Coat: Imron AF700, Clear Coat: AF740, 0.040" 2024-T3 aluminum per AMS-QQ-A-250/5B	2" X 4"	5	25	28 Days	Soak→ Adhesion	D3359	PAFI-MTP-002
					Soak→ Hardness	D3363	PAFI-MTP-002
					Soak→ Visual inspection at 14 days and 28 days	None	PAFI-MTP-002
		5		~ 6 Hours	Fuel Drip (per PAFI-MTP-002 Section 16.3) → Visual Inspection	None	PAFI-MTP-002
Primer: AN 10P8-11 VOC compliant Epoxy Primer, Base Coat: Imron AF700, Clear Coat: AF 740, 0.040" 2024-T3 aluminum per AMS-QQ-A-250/5B	2" X 4"	5	25	28 Days	Soak→ Adhesion	D3359	PAFI-MTP-002
					Soak→ Hardness	D3363	PAFI-MTP-002
					Soak→ Visual inspection at 14 days and 28 days	None	PAFI-MTP-002

Description	Sample Size	Number of Samples	Temp.(°C)	Duration	Test	Test Method	Test Plan/ ASTM Standard No.
		5		~ 6 Hours	Fuel Drip (per PAFI-MTP-002 Section 16.3) → Visual Inspection	None	PAFI-MTP-002
Primer: Axalta Corlar 13580s Epoxy, Base Coat: Imron AF3500, 0.040" 2024-T3 aluminum per AMS-QQ-A-250/5B	2" X 4"	5	25	28 Days	Soak→ Adhesion	D3359	PAFI-MTP-002
					Soak→ Hardness	D3363	PAFI-MTP-002
					Soak→ Visual inspection at 14 days and 28 days	None	PAFI-MTP-002
		5		~ 6 Hours	Fuel Drip (per PAFI-MTP-002 Section 16.3) → Visual Inspection	None	PAFI-MTP-002
Primer: AN 10P8-11 VOC compliant Epoxy Primer, Base Coat: Imron AF3500, 0.040" 2024-T3 aluminum per AMS-QQ-A-250/5B	2" X 4"	5	25	28 Days	Soak→ Adhesion	D3359	PAFI-MTP-002
					Soak→ Hardness	D3363	PAFI-MTP-002
					Soak→ Visual inspection at 14 days and 28 days	None	PAFI-MTP-002

Description	Sample Size	Number of Samples	Temp.(°C)	Duration	Test	Test Method	Test Plan/ ASTM Standard No.
		5		~ 6 Hours	Fuel Drip (per PAFI-MTP-002 Section 16.3) → Visual Inspection	None	PAFI-MTP-002
Primer: Axalta Corlar 13580s Epoxy, Base Coat: Centari 5.10, 0.040" 2024-T3 aluminum per AMS-QQ-A-250/5B	2" X 4"	5	25	28 Days	Soak→ Adhesion	D3359	PAFI-MTP-002
					Soak→ Hardness	D3363	PAFI-MTP-002
					Soak→ Visual inspection at 14 days and 28 days	None	PAFI-MTP-002
		5		~ 6 Hours	Fuel Drip (per PAFI-MTP-002 Section 16.3) → Visual Inspection	None	PAFI-MTP-002
Primer: High Solids Epoxy Primer (CM0483787), Base Coat: Jet Glo Express 840, 0.040" 2024-T3 aluminum per AMS-QQ-A-250/5B	2" X 4"	5	25	28 Days	Soak→ Adhesion	D3359	PAFI-MTP-002
					Soak→ Hardness	D3363	PAFI-MTP-002
					Soak→ Visual inspection at 14 days and 28 days	None	PAFI-MTP-002

Description	Sample Size	Number of Samples	Temp.(°C)	Duration	Test	Test Method	Test Plan/ ASTM Standard No.
		5		~ 6 Hours	Fuel Drip (per PAFI-MTP-002 Section 16.3) → Visual Inspection	None	PAFI-MTP-002
Primer: 10P30-5Y [Fuel tank coating], Base Coat: NA, 0.040" 2024-T3 aluminum per AMS-QQ-A-250/5B	2" X 4"	5	25	28 Days	Soak→ Adhesion	D3359	PAFI-MTP-002
					Soak→ Hardness	D3363	PAFI-MTP-002
					Soak→ Visual inspection at 14 days and 28 days	None	PAFI-MTP-002
		5		~ 6 Hours	Fuel Drip (per PAFI-MTP-002 Section 16.3) → Visual Inspection	None	PAFI-MTP-002
Primer: 454-4-1 [Fuel tank coating], Base Coat: NA, 0.040" 2024-T3 aluminum per AMS-QQ-A-250/5B	2" X 4"	5	25	28 Days	Soak→ Adhesion	D3359	PAFI-MTP-002
					Soak→ Hardness	D3363	PAFI-MTP-002
					Soak→ Visual inspection at 14 days and 28 days	None	PAFI-MTP-002

Description	Sample Size	Number of Samples	Temp.(°C)	Duration	Test	Test Method	Test Plan/ ASTM Standard No.
		5		~ 6 Hours	Fuel Drip (per PAFI-MTP-002 Section 16.3) → Visual Inspection	None	PAFI-MTP-002

G Appendix G – Fabric systems

Table G-1: Fabric Systems

Vendor	Material	P/N	
Poly-Fiber Poly-Fiber Poly-Fiber	Fabric - Polyester Cement Coating - Vinyl	Poly-Fiber Medium Poly Tak Poly-Brush	Stearman approved
Ceconite/Randolph Ceconite/Randolph Ceconite/Randolph	Fabric - Polyester Cement * Coating - Butyrate Dope	Ceconite 102 Ceconite Super Seam A-1690 Clear	Non-Tautening Butyrate
Ceconite/Randolph	* Coating - Nitrate Dope	E-4964 Clear	Non-Tautening Nitrate
Aircraft Spruce Aircraft Spruce Aircraft Spruce Aircraft Spruce	Superflite Fabric VI - Superflite U500 cement Coating - 2-part Urethane - Fabric Primer Catalyst	09-01600 903233 01-01257 09-03247	
Stewart Systems Stewart Systems Aircraft Spruce Stewart Systems	EkoBond Glue EkoFill Superflite Fabric VI Cleaner	SKU: E610 SKU: E620 09-01600 SKU: E670	

* Ceconite/Randolf is constructed using the butyrate dope as one system and the nitrate dope as a second system

Table G-2: Fabric Systems Test Matrix

Description	Sample Size	Number of Samples	Temp.(°C)	Duration (Days)	Test	Test Method	Test Plan/ ASTM Standard No.
Fabric Systems							
Poly-Fiber, Fabric- Polyester, Cement, Coating- Vinyl	1" X 6" specimens, cut from 18" X 14" frame	1 frame, minimum of 3 specimens from 4 regions	25	2	Tensile/ elongation	ASTM D5035	PAFI-MTP-002
					Adhesion and Cross-linking	PAFI MTP-002, Section 17.2.3	PAFI-MTP-002
					Visual Inspection	None	PAFI-MTP-002
Ceconite/Randolph, Fabric-Polyester, Cement, Coating-Butyrate Dope	1" X 6" specimens, cut from 18" X 14" frame	1 frame, minimum of 3 specimens from 4 regions	25	2	Tensile/ elongation	ASTM D5035	PAFI-MTP-002
					Adhesion and Cross-linking	PAFI MTP-002, Section 17.2.3	PAFI-MTP-002

Description	Sample Size	Number of Samples	Temp.(°C)	Duration (Days)	Test	Test Method	Test Plan/ ASTM Standard No.
					Visual Inspection	None	PAFI-MTP-002
Ceconite/Randolph, Fabric-Polyester, Cement, Coating- Nitrate Dope	1" X 6" specimens, cut from 18" X 14" frame	1 frame, minimum of 3 specimens from 4 regions	25	2	Tensile/ elongation	ASTM D5035	PAFI-MTP-002
					Adhesion and Cross-linking	PAFI MTP-002, Section 17.2.3	PAFI-MTP-002
					Visual Inspection	None	PAFI-MTP-002
Aircraft Spruce, Fabric- Superflite Fabric VI, Superflite U500 Cement, Coating 2 part Urethane Fabric Primer Catalyst	1" X 6" specimens, cut from 18" X 14" frame	1 frame, minimum of 3 specimens from 4 regions	25	2	Tensile/ elongation	ASTM D5035	PAFI-MTP-002
					Adhesion and Cross-linking	PAFI MTP-002, Section 17.2.3	PAFI-MTP-002

Description	Sample Size	Number of Samples	Temp.(°C)	Duration (Days)	Test	Test Method	Test Plan/ ASTM Standard No.
					Visual Inspection	None	PAFI-MTP-002
Stewart Systems, Ecobond Glue, Ekofill, Superflight Fabric VI (Aircraft Spruce), Cleaner	1" X 6" specimens, cut from 18" X 14" frame	1 frame, minimum of 3 specimens from 4 regions	25	2	Tensile/ elongation	ASTM D5035	PAFI-MTP-002
					Adhesion and Cross-linking	PAFI MTP-002, Section 17.2.3	PAFI-MTP-002
					Visual Inspection	None	PAFI-MTP-002

H Appendix H – Large distribution hoses

1) Continental Wingcraft
2) Aeropal OR Elaflex OR Trelleborg Aerokler C
3) Hewitt Husky 4113 permanent aviation hose,
    a. Inner liner is NBR, exterior cover is neoprene
4) Goodyear Advantage Petroleum Aircraft Fueling hose
    a. Inner liner NBR, exterior cover Wingprene ™ synthetic rubber
5) Parker Gold Label Aircraft Fueling Hose Series 7776 CT (cold temperature)
    a. Inner liner is NBR, exterior cover is conductive nitrile
    b. NOTE: Parker is out of the market for build but is available through hose distributors and is still present in the field
6) Continental Arctic Wingcraft (low temperature)
7) Aeropal LT OR Elaflex LT OR Trelleborg Aerokler CT (low temperature)

Table H-1: Large Distribution Hoses

Description	Sample Size	Number of Samples	Temp.(°C)	Duration (Days)	Test	Test Method	Test Plan/ ASTM Standard No.
Distribution Hoses							
Continental Wingcraft	1 1/2" minimum dia. Hose, 1" X 1"	3	71	28	Soak→ Durometer—Shore A	D2240	PAFI-MTP-002
					Soak→ Density change	D471	PAFI-MTP-002
					Soak→ Volume swell/dimensional change	D471	PAFI-MTP-002
					Soak→ Visual inspection	None	PAFI-MTP-002
		3	71	28	Soak→ Inner Liner Adhesion Testing	D413	PAFI-MTP-002
	At least 2' in length and fitted with appropriate end fittings and caps, appropriate for sealing the hose, and for attaching pressure connections during proof pressure testing.	1	25	112	16 Week Static Exposure→ Visual inspection→ Proof Pressure Test	PAFI-MTP-002, Section 18.2,D380	PAFI-MTP-002

Description	Sample Size	Number of Samples	Temp.(°C)	Duration (Days)	Test	Test Method	Test Plan/ ASTM Standard No.
Aeropal OR Elaflex OR Trelleborg Aerokler C	1 1/2" minimum dia. Hose, 1" X 1"	3	71	28	Soak→ Durometer—Shore A	D2240	PAFI-MTP-002
					Soak→ Density change	D471	PAFI-MTP-002
					Soak→ Volume swell/dimensional change	D471	PAFI-MTP-002
					Soak→ Visual inspection	None	PAFI-MTP-002
		3	71	28	Soak→ Inner Liner Adhesion Testing	D413	PAFI-MTP-002
	At least 2' in length and fitted with appropriate end fittings and caps, appropriate for sealing the hose, and for attaching pressure connections during proof pressure testing.	1	25	112	16 Week Static Exposure→ Visual inspection→ Proof Pressure Test	PAFI-MTP-002, Section 18.2,D380	PAFI-MTP-002
Hewitt Husky 4113 permanent aviation hose, Inner liner is NBR, exterior	1 1/2" minimum dia. Hose, 1" X 1"	3	71	28	Soak→ Durometer—Shore A	D2240	PAFI-MTP-002
					Soak→ Density change	D471	PAFI-MTP-002
					Soak→ Volume swell/dimensional change	D471	PAFI-MTP-002

Description	Sample Size	Number of Samples	Temp.(°C)	Duration (Days)	Test	Test Method	Test Plan/ ASTM Standard No.
cover is neoprene					Soak→ Visual inspection	None	PAFI-MTP-002
		3	71	28	Soak→ Inner Liner Adhesion Testing	D413	PAFI-MTP-002
	At least 2' in length and fitted with appropriate end fittings and caps, appropriate for sealing the hose, and for attaching pressure connections during proof pressure testing.	1	25	112	16 Week Static Exposure→ Visual inspection→ Proof Pressure Test	PAFI-MTP-002, Section 18.2,D380	PAFI-MTP-002
Goodyear Advantage Petroleum Aircraft Fueling hose, Inner liner NBR, exterior cover Wingprene ™ synthetic rubber	1 1/2" minimum dia. Hose, 1" X 1"	3	71	28	Soak→ Durometer—Shore A	D2240	PAFI-MTP-002
					Soak→ Density change	D471	PAFI-MTP-002
					Soak→ Volume swell/dimensional change	D471	PAFI-MTP-002
					Soak→ Visual inspection	None	PAFI-MTP-002
		3	71	28	Soak→ Inner Liner Adhesion Testing	D413	PAFI-MTP-002

Description	Sample Size	Number of Samples	Temp.(°C)	Duration (Days)	Test	Test Method	Test Plan/ ASTM Standard No.
	At least 2' in length and fitted with appropriate end fittings and caps, appropriate for sealing the hose, and for attaching pressure connections during proof pressure testing.	1	25	112	16 Week Static Exposure→ Visual inspection→ Proof Pressure Test	PAFI-MTP-002, Section 18.2,D380	PAFI-MTP-002
Parker Gold Label Aircraft Fueling Hose Series 7776 CT (cold temperature), Inner liner is NBR, exterior cover is conductive nitrile (Note: Parker is out of the market for build but is available through hose	1 1/2" minimum dia. Hose, 1" X 1"	3	71	28	Soak→ Durometer—Shore A	D2240	PAFI-MTP-002
					Soak→ Density change	D471	PAFI-MTP-002
					Soak→ Volume swell/dimensional change	D471	PAFI-MTP-002
					Soak→ Visual inspection	None	PAFI-MTP-002
		3	71	28	Soak→ Inner Liner Adhesion Testing	D413	PAFI-MTP-002
	At least 2' in length and fitted with appropriate end fittings and caps, appropriate for sealing the hose, and for	1	25	112	16 Week Static Exposure→ Visual inspection→ Proof Pressure Test	PAFI-MTP-002, Section 18.2,D380	PAFI-MTP-002

Description	Sample Size	Number of Samples	Temp.(°C)	Duration (Days)	Test	Test Method	Test Plan/ ASTM Standard No.
distributors and is still present in the field)	attaching pressure connections during proof pressure testing.						

I Appendix I – Composite materials

Resins: Parts A and B

Bis A

Brand	Part A	Part B - Slow	Part B - XFast
EZ-Poxy (produced by Composite Polymer Design)	EZ10A	EZ87B	
PTM&W Aeropoxy	PR2032	PH3660	
Hexion MGS	L285	H287	H285
Hexion MGS <German FAA Approved>	L335	H338, H340	
ProSet (post 2013)	LAM-125	LAM-229	

Bis F (Vinyl)

Brand	Part A	Part B - Slow	Part B - XFast
West System	105	209 (Xslow)	
DPL862	DPL862		TETA
JEFFCO 9700	Now RHINO 9700A	9700B (TETA 30%)	
Hexion	8014		TETA
Dow	Derakane 470-350	MEKP Catalyst	
Derakane Signa	INEOS DERAKANE SIGNIA 411-350	MEKP Catalyst	

Resins highlighted in green will be subjected to full testing regardless of pre-screening performance. Other resins will only require full testing following a failure during pre-screening.

Prepregs

Non-toughened prepreg – Toray Advanced Composites BT250 E1

Toughened Prepreg – ACG MTM 45-1

Epoxy Resin Prepreg – Toray Advanced Composites 2510

Adhesives Low temperature cure epoxy paste adhesive – PTM-W ES6292

Low temperature cure epoxy adhesive – Hysol EA9360

Foam Cores

Polyvinyl chloride (PVC) structural foam – Diab Divinycell HT 61™

Polyurethane structural foam – General Plastics FR-3700 Last-A-Foam™

Fabrics

E-glass (fiberglass) fabric

Carbon fiber fabric

Toray T700G carbon fabric, unidirectional

Table I-1: Composite Materials

Description	Sample Size	Number of Samples	Temp. (°C)	Duration (Days)	Test	Test Method	Test Plan/ ASTM Standard No.
Resin Pre-Screening							
Bis A Epoxy with Slow Cure - EZ-Poxy EZ10A resin with EZ87B curative without fiber	Sized appropriately for the test equipment used	5	60	5	Soak→ Weight	PAFI-MTP-002, Section 19.1	PAFI-MTP-002
					Soak→ Density Change	D471	PAFI-MTP-002
					Soak→ Glass Transition Temperature (T_g)	PAFI-MTP-002, Section 19.1	PAFI-MTP-002
Bis A Epoxy with Slow Cure - PTM&W Aeropoxy PR 2032 resin with PH3660 curative without fiber	Sized appropriately for the test equipment used	5	60	5	Soak→ Weight	PAFI-MTP-002, Section 19.1	PAFI-MTP-002
					Soak→ Density Change	D471	PAFI-MTP-002
					Soak→ Glass Transition Temperature (T_g)	PAFI-MTP-002, Section 19.1	PAFI-MTP-002
*Bis A Epoxy with fast cure – Hexion MGS 285 with	Sized appropriately	5	60	5	Soak→ Weight	PAFI-MTP-002, Section 19.1	PAFI-MTP-002

Description	Sample Size	Number of Samples	Temp. (°C)	Duration (Days)	Test	Test Method	Test Plan/ ASTM Standard No.
cycloaliphatic amine H287 curative without fiber	for the test equipment used				Soak→ Density Change	D471	PAFI-MTP-002
					Soak→ Glass Transition Temperature (T_g)	PAFI-MTP-002, Section 19.1	PAFI-MTP-002
*Bis A Epoxy with slow cure - Hexion MGS 285 with cycloaliphatic amine H285 curative without fiber	Sized appropriately for the test equipment used	5	60	5	Soak→ Weight	PAFI-MTP-002, Section 19.1	PAFI-MTP-002
					Soak→ Density Change	D471	PAFI-MTP-002
					Soak→ Glass Transition Temperature (T_g)	PAFI-MTP-002, Section 19.1	PAFI-MTP-002
Bis A Epoxy with slow cure - Hexion L 335 with cycloaliphatic amine H338 or H340 curative without fiber	Sized appropriately for the test equipment used	5	60	5	Soak→ Weight	PAFI-MTP-002, Section 19.1	PAFI-MTP-002
					Soak→ Density Change	D471	PAFI-MTP-002
					Soak→ Glass Transition Temperature (T_g)	PAFI-MTP-002, Section 19.1	PAFI-MTP-002
	Sized appropriately	5	60	5	Soak→ Weight	PAFI-MTP-002, Section 19.1	PAFI-MTP-002

Description	Sample Size	Number of Samples	Temp. (°C)	Duration (Days)	Test	Test Method	Test Plan/ ASTM Standard No.
Bis A Epoxy with slow cure-LAM-125 with LAM-229 curative without fiber	for the test equipment used				Soak→ Density Change	D471	PAFI-MTP-002
					Soak→ Glass Transition Temperature (T_g)	PAFI-MTP-002, Section 19.1	PAFI-MTP-002
Bis F Vinyl – West System 105 with slow primary amine curative 209 without fiber	Sized appropriately for the test equipment used	5	60	5	Soak→ Weight	PAFI-MTP-002, Section 19.1	PAFI-MTP-002
					Soak→ Density Change	D471	PAFI-MTP-002
					Soak→ Glass Transition Temperature (T_g)	PAFI-MTP-002, Section 19.1	PAFI-MTP-002
Bis F Vinyl – DPL 862 with TETA curative without fiber	Sized appropriately for the test equipment used	5	60	5	Soak→ Weight	PAFI-MTP-002, Section 19.1	PAFI-MTP-002
					Soak→ Density Change	D471	PAFI-MTP-002
					Soak→ Glass Transition Temperature (T_g)	PAFI-MTP-002, Section 19.1	PAFI-MTP-002
	Sized appropriately	5	60	5	Soak→ Weight	PAFI-MTP-002, Section 19.1	PAFI-MTP-002

Description	Sample Size	Number of Samples	Temp. (°C)	Duration (Days)	Test	Test Method	Test Plan/ ASTM Standard No.
Bis F Vinyl - RHINO 9700A with 9700B 30% TETA curative without fiber	for the test equipment used				Soak→ Density Change	D471	PAFI-MTP-002
					Soak→ Glass Transition Temperature (T_g)	PAFI-MTP-002, Section 19.1	PAFI-MTP-002
Bis F Vinyl with fast primary amine curative – Hexion 8014 with TETA curative without fiber	Sized appropriately for the test equipment used	5	60	5	Soak→ Weight	PAFI-MTP-002, Section 19.1	PAFI-MTP-002
					Soak→ Density Change	D471	PAFI-MTP-002
					Soak→ Glass Transition Temperature (T_g)	PAFI-MTP-002, Section 19.1	PAFI-MTP-002
*Vinyl Ester – Derakane 470 with MEKP catalyst without fiber	Sized appropriately for the test equipment used	5	60	5	Soak→ Weight	PAFI-MTP-002, Section 19.1	PAFI-MTP-002
					Soak→ Density Change	D471	PAFI-MTP-002
					Soak→ Glass Transition Temperature (T_g)	PAFI-MTP-002, Section 19.1	PAFI-MTP-002
	Sized appropriately	5	60	5	Soak→ Weight	PAFI-MTP-002, Section 19.1	PAFI-MTP-002

Description	Sample Size	Number of Samples	Temp. (°C)	Duration (Days)	Test	Test Method	Test Plan/ ASTM Standard No.
Vinyl Ester – Derakane Signia 411-350 with MEKP catalyst without fiber	for the test equipment used				Soak→ Density Change	D471	PAFI-MTP-002
					Soak→ Glass Transition Temperature (T_g)	PAFI-MTP-002, Section 19.1	PAFI-MTP-002
Epoxy – Toray Advanced 2510 Prepreg, unidirectional (on T700G carbon fabric, unidirectional)	Sized appropriately for the test equipment used	5	60	5	Soak→ Weight	PAFI-MTP-002, Section 19.1	PAFI-MTP-002
					Soak→ Density Change	D471	PAFI-MTP-002
					Soak→ Glass Transition Temperature (T_g)	PAFI-MTP-002, Section 19.1	PAFI-MTP-002
Non-toughened pre-preg – Toray Advanced Composites BT250 E1 on E-glass (fiberglass) fabric	Sized appropriately for the test equipment used	5	60	5	Soak→ Weight	PAFI-MTP-002, Section 19.1	PAFI-MTP-002
					Soak→ Density Change	D471	PAFI-MTP-002
					Soak→ Glass Transition Temperature (T_g)	PAFI-MTP-002, Section 19.1	PAFI-MTP-002
PTM-W ES6292 adhesive samples using laminates constructed from	Sized appropriately	5	60	5	Soak→ Weight	PAFI-MTP-002, Section 19.1	PAFI-MTP-002

Description	Sample Size	Number of Samples	Temp. (°C)	Duration (Days)	Test	Test Method	Test Plan/ ASTM Standard No.
Toray Advanced Composites BT250E-1 E-glass prepreg	for the test equipment used				Soak→ Density Change	D471	PAFI-MTP-002
					Soak→ Glass Transition Temperature (T_g)	PAFI-MTP-002, Section 19.1	PAFI-MTP-002
Toughened Pre-preg – ACG MTM 45-1 on Carbon Fiber Fabric	Sized appropriately for the test equipment used	5	60	5	Soak→ Weight	PAFI-MTP-002, Section 19.1	PAFI-MTP-002
					Soak→ Density Change	D471	PAFI-MTP-002
					Soak→ Glass Transition Temperature (T_g)	PAFI-MTP-002, Section 19.1	PAFI-MTP-002
Hysol EA 9360 low temperature cure epoxy adhesive samples using laminates constructed from ACG MTM 45-1 toughened pre-preg	Sized appropriately for the test equipment used	5	60	5	Soak→ Weight	PAFI-MTP-002, Section 19.1	PAFI-MTP-002
					Soak→ Density Change	D471	PAFI-MTP-002
					Soak→ Glass Transition Temperature (T_g)	PAFI-MTP-002, Section 19.1	PAFI-MTP-002
Finished Composites- Property Testing. Performed only on resins that were unacceptable performance during pre-screening.							

Description	Sample Size	Number of Samples	Temp. (°C)	Duration (Days)	Test	Test Method	Test Plan/ ASTM Standard No.
Any of the above systems not marked with an * which have failed the pre-screening above: Built up on E-glass fiber	1" X 3"	6	25	28	Soak→ Dimensional Change	PAFI-MTP-002 Section 19.2.19	PAFI-MTP-002
					Soak→ Hardness	D2583	PAFI-MTP-002
					Soak→ Density	D792	PAFI-MTP-002
					Soak→ Visual Inspection	None	PAFI-MTP-002
	1" X 10" with bonded tabs to facilitate testing	10			Soak→ Tensile, Strain and Modulus	D3039	PAFI-MTP-002
	1 1/2" X 1/2"	10			Soak→ Short Beam Cantilever	D2344	PAFI-MTP-002
	3” x ¾” rectangular coupons. A V-notch 0.15” deep and 90° is cut into the	10			Soak→ V-Notch Shear Strength	D5379	PAFI-MTP-002

Description	Sample Size	Number of Samples	Temp. (°C)	Duration (Days)	Test	Test Method	Test Plan/ ASTM Standard No.
	center on both sides						
Bis A Epoxy with fast cure – Hexion MGS 285 with cycloaliphatic amine H287 curative on E-glass (fiberglass) fabric	1" X 3"	6	25	28	Soak→ Dimensional Change	PAFI-MTP-002 Section 19.2.19	PAFI-MTP-002
					Soak→ Hardness	D2583	PAFI-MTP-002
					Soak→ Density	D792	PAFI-MTP-002
					Soak→ Visual Inspection	None	PAFI-MTP-002
	1" X 10" with bonded tabs to facilitate testing	10			Soak→ Tensile, Strain and Modulus	D3039	PAFI-MTP-002
	1 1/2" X 1/2"	10			Soak→ Short Beam Cantilever	D2344	PAFI-MTP-002
	3" x ¾" rectangular coupons. A V-notch 0.15"	10			Soak→ V-Notch Shear Strength	D5379	PAFI-MTP-002

Description	Sample Size	Number of Samples	Temp. (°C)	Duration (Days)	Test	Test Method	Test Plan/ ASTM Standard No.
	deep and 90° is cut into the center on both sides						
Bis A Epoxy with slow cure - Hexion MGS 285 with cycloaliphatic amine H285 curative on E-glass (fiberglass) fabric	1" X 3"	6	25	28	Soak→ Dimensional Change	PAFI-MTP-002 Section 19.2.19	PAFI-MTP-002
					Soak→ Hardness	D2583	PAFI-MTP-002
					Soak→ Density	D792	PAFI-MTP-002
					Soak→ Visual Inspection	None	PAFI-MTP-002
	1" X 10" with bonded tabs to facilitate testing	10			Soak→ Tensile, Strain and Modulus	D3039	PAFI-MTP-002
	1 1/2" X 1/2"	10			Soak→ Short Beam Cantilever	D2344	PAFI-MTP-002

Description	Sample Size	Number of Samples	Temp. (°C)	Duration (Days)	Test	Test Method	Test Plan/ ASTM Standard No.
	3” x ¾” rectangular coupons. A V-notch 0.15” deep and 90° is cut into the center on both sides	10			Soak→ V-Notch Shear Strength	D5379	PAFI-MTP-002
Bis F Epoxy with fast primary amine curative – Hexion 8014 with TETA curative on E-glass (fiberglass) fabric	1" X 3"	6	25	28	Soak→ Dimensional Change	PAFI-MTP-002 Section 19.2.19	PAFI-MTP-002
					Soak→ Hardness	D2583	PAFI-MTP-002
					Soak→ Density	D792	PAFI-MTP-002
					Soak→ Visual Inspection	None	PAFI-MTP-002
	1" X 10" with bonded tabs to facilitate testing	10			Soak→ Tensile, Strain and Modulus	D3039	PAFI-MTP-002

Description	Sample Size	Number of Samples	Temp. (°C)	Duration (Days)	Test	Test Method	Test Plan/ ASTM Standard No.
	1 1/2" X 1/2"	10			Soak→ Short Beam Cantilever	D2344	PAFI-MTP-002
	3” x ¾” rectangular coupons. A V-notch 0.15” deep and 90° is cut into the center on both sides	10			Soak→ V-Notch Shear Strength	D5379	PAFI-MTP-002
Vinyl Ester – Derakane 470 on E-glass (fiberglass) fabric	1" X 3"	6	25	28	Soak→ Dimensional Change	PAFI-MTP-002 Section 19.2.19	PAFI-MTP-002
					Soak→ Hardness	D2583	PAFI-MTP-002
					Soak→ Density	D792	PAFI-MTP-002
					Soak→ Visual Inspection	None	PAFI-MTP-002

Description	Sample Size	Number of Samples	Temp. (°C)	Duration (Days)	Test	Test Method	Test Plan/ ASTM Standard No.
	1" X 10" with bonded tabs to facilitate testing	10			Soak→ Tensile, Strain and Modulus	D3039	PAFI-MTP-002
	1 1/2" X 1/2"	10			Soak→ Short Beam Cantilever	D2344	PAFI-MTP-002
	3" x ¾" rectangular coupons. A V-notch 0.15" deep and 90° is cut into the center on both sides	10			Soak→ V-Notch Shear Strength	D5379	PAFI-MTP-002
Hysol EA 9360 low temperature cure epoxy adhesive samples using laminates constructed from ACG MTM 45-1 toughened pre-preg	per D3163	10	25	28	Soak→ Adhesion Strength Lap shear	D3163	PAFI-MTP-002

Description	Sample Size	Number of Samples	Temp. (°C)	Duration (Days)	Test	Test Method	Test Plan/ ASTM Standard No.
PTM-W ES6292 low temperature cure epoxy paste adhesive samples using laminates constructed from Toray Advanced Composites BT250E-1 E-glass prepreg	per D3163	10	25	28	Soak→ Adhesion Strength Lap shear	D3163	PAFI-MTP-002
PVC Structural Foam (Diab Divinycell HT 61—Trademarked)	1" X 3"	10	25	20.8	Soak→ Weight	500 h soak measuring change in mass to 0.001 g	D7826-22
					Soak→ Dimensional change	500 h soak measuring dimensional change to 0.02 mm	D7826-22
					Soak→ Visual inspection	500 h soak noting color and surface change using 50× magnification	D7826-22
					Soak→ Core composition	D1621	D7826-22

Description	Sample Size	Number of Samples	Temp. (°C)	Duration (Days)	Test	Test Method	Test Plan/ ASTM Standard No.
Rigid Polyurethane Foam (General Plastics FR-3700 Last-A-Foam—Trademarked)	1" X 3"	10	25	20.8	Soak→ Weight	500 h soak measuring change in mass to 0.001 g	D7826-22
					Soak→ Dimensional change	500 h soak measuring dimensional change to 0.02 mm	D7826-22
					Soak→ Visual inspection	500 h soak noting color and surface change using 50× magnification	D7826-22
					Soak→ Core composition	D1621	D7826-22

J Appendix J – Distribution system linings, filter/coalescers

Table J-1: Linings, Filters/Coalescers

Description	Sample Size	Number of Samples	Temp.(°C)	Duration (Days)	Test	Test Method	Test Plan/ ASTM Standard No.
Distribution Hoses							
Continental Wingcraft	1 1/2" minimum dia. Hose, 1" X 1"	3	71	28	Soak→ Durometer— Shore A	D2240	PAFI-MTP-002
					Soak→ Density change	D471	PAFI-MTP-002
					Soak→ Volume swell/dimensional change	D471	PAFI-MTP-002
					Soak→ Visual inspection	None	PAFI-MTP-002
		3	71	28	Soak→ Inner Liner Adhesion Testing	D413	PAFI-MTP-002
	At least 2' in length and fitted with appropriate end fittings and caps, appropriate for sealing the hose, and for attaching pressure connections during proof pressure testing.	1	25	112	16 Week Static Exposure→ Visual inspection→ Proof Pressure Test	PAFI-MTP-002, Section 18.2,D380	PAFI-MTP-002

Description	Sample Size	Number of Samples	Temp.(°C)	Duration (Days)	Test	Test Method	Test Plan/ ASTM Standard No.
Aeropal OR Elaflex OR Trelleborg Aerokler C	1 1/2" minimum dia. Hose, 1" X 1"	3	71	28	Soak→ Durometer— Shore A	D2240	PAFI-MTP-002
					Soak→ Density change	D471	PAFI-MTP-002
					Soak→ Volume swell/dimensional change	D471	PAFI-MTP-002
					Soak→ Visual inspection	None	PAFI-MTP-002
		3	71	28	Soak→ Inner Liner Adhesion Testing	D413	PAFI-MTP-002
	At least 2' in length and fitted with appropriate end fittings and caps, appropriate for sealing the hose, and for attaching pressure connections during proof pressure testing.	1	25	112	16 Week Static Exposure→ Visual inspection→ Proof Pressure Test	PAFI-MTP-002, Section 18.2,D380	PAFI-MTP-002
Hewitt Husky 4113 permanent aviation hose, Inner	1 1/2" minimum dia. Hose, 1" X 1"	3	71	28	Soak→ Durometer— Shore A	D2240	PAFI-MTP-002
					Soak→ Density change	D471	PAFI-MTP-002

Description	Sample Size	Number of Samples	Temp.(°C)	Duration (Days)	Test	Test Method	Test Plan/ ASTM Standard No.
liner is NBR, exterior cover is neoprene					Soak→ Volume swell/dimensional change	D471	PAFI-MTP-002
					Soak→ Visual inspection	None	PAFI-MTP-002
		3	71	28	Soak→ Inner Liner Adhesion Testing	D413	PAFI-MTP-002
	At least 2' in length and fitted with appropriate end fittings and caps, appropriate for sealing the hose, and for attaching pressure connections during proof pressure testing.	1	25	112	16 Week Static Exposure→ Visual inspection→ Proof Pressure Test	PAFI-MTP-002, Section 18.2,D380	PAFI-MTP-002
Goodyear Advantage Petroleum Aircraft Fueling hose, Inner liner NBR, exterior cover Wingprene	1 1/2" minimum dia. Hose, 1" X 1"	3	71	28	Soak→ Durometer—Shore A	D2240	PAFI-MTP-002
					Soak→ Density change	D471	PAFI-MTP-002
					Soak→ Volume swell/dimensional change	D471	PAFI-MTP-002
					Soak→ Visual inspection	None	PAFI-MTP-002

Description	Sample Size	Number of Samples	Temp.(°C)	Duration (Days)	Test	Test Method	Test Plan/ ASTM Standard No.
™ synthetic rubber		3	71	28	Soak→ Inner Liner Adhesion Testing	D413	PAFI-MTP-002
	At least 2' in length and fitted with appropriate end fittings and caps, appropriate for sealing the hose, and for attaching pressure connections during proof pressure testing.	1	25	112	16 Week Static Exposure→ Visual inspection→ Proof Pressure Test	PAFI-MTP-002, Section 18.2,D380	PAFI-MTP-002
Parker Gold Label Aircraft Fueling Hose Series 7776 CT (cold temperature), Inner liner is NBR, exterior cover is conductive nitrile (Note: Parker is out of the market for build but is available	1 1/2" minimum dia. Hose, 1" X 1"	3	71	28	Soak→ Durometer— Shore A	D2240	PAFI-MTP-002
					Soak→ Density change	D471	PAFI-MTP-002
					Soak→ Volume swell/dimensional change	D471	PAFI-MTP-002
					Soak→ Visual inspection	None	PAFI-MTP-002
		3	71	28	Soak→ Inner Liner Adhesion Testing	D413	PAFI-MTP-002
	At least 2' in length and fitted with appropriate end fittings and caps, appropriate for sealing	1	25	112	16 Week Static Exposure→ Visual inspection→	PAFI-MTP-002, Section 18.2,D380	PAFI-MTP-002

Description	Sample Size	Number of Samples	Temp.(°C)	Duration (Days)	Test	Test Method	Test Plan/ ASTM Standard No.
through hose distributors and is still present in the field)	the hose, and for attaching pressure connections during proof pressure testing.				Proof Pressure Test		
Continental Arctic Wingcraft (low temperature)	1 1/2" minimum dia. Hose, 1" X 1"	3	71	28	Soak→ Durometer— Shore A	D2240	PAFI-MTP-002
					Soak→ Density change	D471	PAFI-MTP-002
					Soak→ Volume swell/dimensional change	D471	PAFI-MTP-002
					Soak→ Visual inspection	None	PAFI-MTP-002
		3	71	28	Soak→ Inner Liner Adhesion Testing	D413	PAFI-MTP-002
	At least 2' in length and fitted with appropriate end fittings and caps, appropriate for sealing the hose, and for attaching pressure connections during proof pressure testing.	1	25	112	16 Week Static Exposure→ Visual inspection→ Proof Pressure Test	PAFI-MTP-002, Section 18.2,D380	PAFI-MTP-002

Description	Sample Size	Number of Samples	Temp.(°C)	Duration (Days)	Test	Test Method	Test Plan/ ASTM Standard No.
Aeropal LT OR Elaflex LT OR Trelleborg Aerokler CT (low temperature)	1 1/2" minimum dia. Hose, 1" X 1"	3	71	28	Soak→ Durometer— Shore A	D2240	PAFI-MTP-002
					Soak→ Density change	D471	PAFI-MTP-002
					Soak→ Volume swell/dimensional change	D471	PAFI-MTP-002
					Soak→ Visual inspection	None	PAFI-MTP-002
		3	71	28	Soak→ Inner Liner Adhesion Testing	D413	PAFI-MTP-002
	At least 2' in length and fitted with appropriate end fittings and caps, appropriate for sealing the hose, and for attaching pressure connections during proof pressure testing.	1	25	112	16 Week Static Exposure→ Visual inspection→ Proof Pressure Test	PAFI-MTP-002, Section 18.2,D380	PAFI-MTP-002
Lining							
Chemliner 4000, High Solid,	2" X 2" with coating thickness of 5 mil or less	3	25	28	Soak→ Adhesion	D3359, Method B	PAFI-MTP-002
					Soak→ Hardness	E-18	PAFI-MTP-002

Description	Sample Size	Number of Samples	Temp.(°C)	Duration (Days)	Test	Test Method	Test Plan/ ASTM Standard No.
Novolac Epoxy Lining Coated Sheet of 1018 Low Carbon Steel					Soak→ Visual inspection at 14 days and 28 days	None	PAFI-MTP-002
					Soak→ Pull-Off Strength	D4541	PAFI-MTP-002
Chemthane 4200PW, Solvent-Free Two Component Polyurethane Coated Sheet of 1018 Low Carbon Steel	2" X 2" with coating thickness of 5 mil or less	3	25	28	Soak→ Adhesion	D3359, Method B	PAFI-MTP-002
					Soak→ Hardness	E-18	PAFI-MTP-002
					Soak→ Visual inspection at 14 days and 28 days	None	PAFI-MTP-002
					Soak→ Pull-Off Strength	D4541	PAFI-MTP-002
Filters/Coalescers							
Paper Pleated Fuel Filter, Facet Fuel-Gard,	Filter Cartridge (as received) in housing or	3	71	21	Soak→ Visual inspection for physical changes or disintegration	None.	PAFI-MTP-002

Description	Sample Size	Number of Samples	Temp.(°C)	Duration (Days)	Test	Test Method	Test Plan/ ASTM Standard No.
VF-21SB, Filter Cartridge P/N: CF-609-2PLO, CF-609-5PLO	container of sufficient size.				of the end caps, sealing adhesive or media.→ Dimensional (circumference, length, pleat thickness)		
					Soak Fuel Filter→ Retain Fluid→ Water Reaction	D1094	PAFI-MTP-002
					Soak Fuel Filter→ Retain Fluid→ Surface Tension	D1331	PAFI-MTP-002
					Soak Fuel Filter→ Retain Fluid→ Media Migrations	D2276	PAFI-MTP-002
Paper Pleated Fuel Filter for Velcon VF-	Filter Cartridge (as received) in housing or	3	71	21	Soak→ Visual inspection for physical changes or disintegration	None.	PAFI-MTP-002

Description	Sample Size	Number of Samples	Temp.(°C)	Duration (Days)	Test	Test Method	Test Plan/ ASTM Standard No.
61 Housing, P/N; FO512PL-05	container of sufficient size.				of the end caps, sealing adhesive or media.→ Dimensional (circumference, length, pleat thickness)		
					Soak Fuel Filter→ Retain Fluid→ Water Reaction	D1094	PAFI-MTP-002
					Soak Fuel Filter→ Retain Fluid→ Surface Tension	D1331	PAFI-MTP-002
					Soak Fuel Filter→ Retain Fluid→ Media Migrations	D2276	PAFI-MTP-002
Coalescer/ Separator Cartridge, Facet Fuel	Coalescer/ Separator Cartridge (as received)	3	71	21	Soak→ Visual inspection for physical changes or disintegration	None.	PAFI-MTP-002

Description	Sample Size	Number of Samples	Temp.(°C)	Duration (Days)	Test	Test Method	Test Plan/ ASTM Standard No.
Guard, VF-21SB, P/N: CC-21-7	in housing or container of sufficient size.				of the end caps, sealing adhesive or media.→ Dimensional (circumference, length, pleat thickness)		
					Soak Coalescer/ Separator→ Retain Fluid→ Water Reaction	D1094	PAFI-MTP-002
					Soak Coalescer/ Separator→ Retain Fluid→ Surface Tension	D1331	PAFI-MTP-002
					Soak Coalescer/ Separator→ Retain Fluid→ Media Migrations	D2276	PAFI-MTP-002

Description	Sample Size	Number of Samples	Temp.(°C)	Duration (Days)	Test	Test Method	Test Plan/ ASTM Standard No.
Coalescer/ Separator Cartridge, Velcon ,P/N: OS-51288	Coalescer/ Separator Cartridge (as received) in housing or container of sufficient size.	3	71	21	Soak→ Visual inspection for physical changes or disintegration of the end caps, sealing adhesive or media.→ Dimensional (circumference, length, pleat thickness)	None.	PAFI-MTP-002
					Soak Coalescer/ Separator→ Retain Fluid→ Water Reaction	D1094	PAFI-MTP-002
					Soak Coalescer/ Separator→ Retain Fluid→ Surface Tension	D1331	PAFI-MTP-002

Description	Sample Size	Number of Samples	Temp.(°C)	Duration (Days)	Test	Test Method	Test Plan/ ASTM Standard No.
					Soak Coalescer/ Separator→ Retain Fluid→ Media Migrations	D2276	PAFI-MTP-002
Housing, Velcon ,P/N: VF-61	Housing in container of sufficient size.	2	71	21	Soak→ Visual inspection for physical changes (staining, corrosion or damage of the housing and inspection of seals.)	None.	PAFI-MTP-002
Housing, Facet Fuel Gard Series	Housing in container of sufficient size.	2	71	21	Soak→ Visual inspection for physical changes (staining, corrosion or damage of the housing and	None.	PAFI-MTP-002

Description	Sample Size	Number of Samples	Temp.(°C)	Duration (Days)	Test	Test Method	Test Plan/ ASTM Standard No.
					inspection of seals.)		

K Appendix K – Vendor supplied materials

1) Piper 187-433 Synthetic Rubber Sheet (MIL-PRF-6855); 2’ x 2’ sheet
    a. Exposure temperature Room Temp and 71 °C
2) Piper 462-049 Gaskets (ASTM D2000); 10 each
    a. Exposure temperature Room Temp and 71 °C
3) Piper 462-056 Gaskets (ASTM D2000); 10 each
    a. Exposure temperature Room Temp and 71 °C
4) Piper 106927-001Duckbill Check Valve (ASTM D2000); 10 each
    a. Exposure temperature Room Temp and 93 °C
5) Lycoming BN-0002.05 Fairprene Sheet; 2’ x 2’ sheet
    a. Exposure temperature Room Temp and 93 °C

Table K-1: Vendor Supplied Material Tests

Description	Sample Size	Number of Samples	Temp.(°C)	Duration (Days)	Test	Test Method	Test Plan/ ASTM Standard No.
Vendor Supplied Material Tests							
MIL-PRF-6855, Piper P/N 187-433 Synthetic Rubber Sheet	Dumbbell D412 Die C	4	25	28	Soak→ Tensile/elongation	D412, Section 12	PAFI-MTP-002
	1" × 2",	3	25	28	Soak→ Durometer—Shore A	D2240	PAFI-MTP-002
					Soak→ Density change	D471	PAFI-MTP-002
					Soak→ Volume swell/dimensional change	D471	PAFI-MTP-002
					Soak→ Visual inspection	None	PAFI-MTP-002
	Dumbbell D412 Die C	4	71	28	Soak→ Tensile/elongation	D412, Section 12	PAFI-MTP-002
	1" × 2"	3	71	28	Soak→ Durometer—Shore A	D2240	PAFI-MTP-002
					Soak→ Density change	D471	PAFI-MTP-002

Description	Sample Size	Number of Samples	Temp.(°C)	Duration (Days)	Test	Test Method	Test Plan/ ASTM Standard No.
					Soak→ Volume swell/dimensional change	D471	PAFI-MTP-002
					Soak→ Visual inspection	None	PAFI-MTP-002
Fairprene, Lycoming P/N BN-0002.05	0.05", Dumbbell D412 Die C	4	25	28	Soak→ Tensile/elongation	D412, Section 12	PAFI-MTP-002
	0.05", 1" × 2"	3	25	28	Soak→ Durometer—Shore A	D2240	PAFI-MTP-002
					Soak→ Density change	D471	PAFI-MTP-002
					Soak→ Volume swell/dimensional change	D471	PAFI-MTP-002
					Soak→ Visual inspection	None	PAFI-MTP-002
	0 .05", Dumbbell D412 Die C	4	93	28	Soak→ Tensile/elongation	D412, Section 12	PAFI-MTP-002

Description	Sample Size	Number of Samples	Temp.(°C)	Duration (Days)	Test	Test Method	Test Plan/ ASTM Standard No.
	0.05", 1" × 2"	3	93	28	Soak→ Durometer—Shore A	D2240	PAFI-MTP-002
					Soak→ Density change	D471	PAFI-MTP-002
					Soak→ Volume swell/dimensional change	D471	PAFI-MTP-002
					Soak→ Visual inspection	None	PAFI-MTP-002
Piper 462-049 Gasket	1" × 2"	3	25	28	Soak→ Durometer—Shore A	D2240	PAFI-MTP-002
					Soak→ Density change	D471	PAFI-MTP-002
					Soak→ Volume swell/dimensional change	D471	PAFI-MTP-002
					Soak→ Visual inspection	None	PAFI-MTP-002
	1" × 2"	3	71	28	Soak→ Durometer—Shore A	D2240	PAFI-MTP-002
					Soak→ Density change	D471	PAFI-MTP-002

Description	Sample Size	Number of Samples	Temp.(°C)	Duration (Days)	Test	Test Method	Test Plan/ ASTM Standard No.
					Soak→ Volume swell/dimensional change	D471	PAFI-MTP-002
					Soak→ Visual inspection	None	PAFI-MTP-002
Piper 462-056 Gasket	1" × 2"	3	25	28	Soak→ Durometer—Shore A	D2240	PAFI-MTP-002
					Soak→ Density change	D471	PAFI-MTP-002
					Soak→ Volume swell/dimensional change	D471	PAFI-MTP-002
					Soak→ Visual inspection	None	PAFI-MTP-002
	1" × 2"	3	71	28	Soak→ Durometer—Shore A	D2240	PAFI-MTP-002
					Soak→ Density change	D471	PAFI-MTP-002
					Soak→ Volume swell/dimensional change	D471	PAFI-MTP-002
					Soak→ Visual inspection	None	PAFI-MTP-002
	1" × 2"	3	25	28	Soak→ Density change	D471	PAFI-MTP-002

Description	Sample Size	Number of Samples	Temp.(°C)	Duration (Days)	Test	Test Method	Test Plan/ ASTM Standard No.
Piper 106927-001 Duckbill Check Valve					Soak→ Durometer—Shore A (or Shore M)	D2240	PAFI-MTP-002
					Soak→ Visual inspection	None	PAFI-MTP-002
	1" × 2"	3	93	28	Soak→ Density change	D471	PAFI-MTP-002
					Soak→ Durometer—Shore A (or Shore M)	D2240	PAFI-MTP-002
					Soak→ Visual inspection	None	PAFI-MTP-002

L Appendix L – AMS-G-6032 grease, fuel and oil resistant

1) United Erie “EZ Turn Lubricant

– END OF APPENDICES –