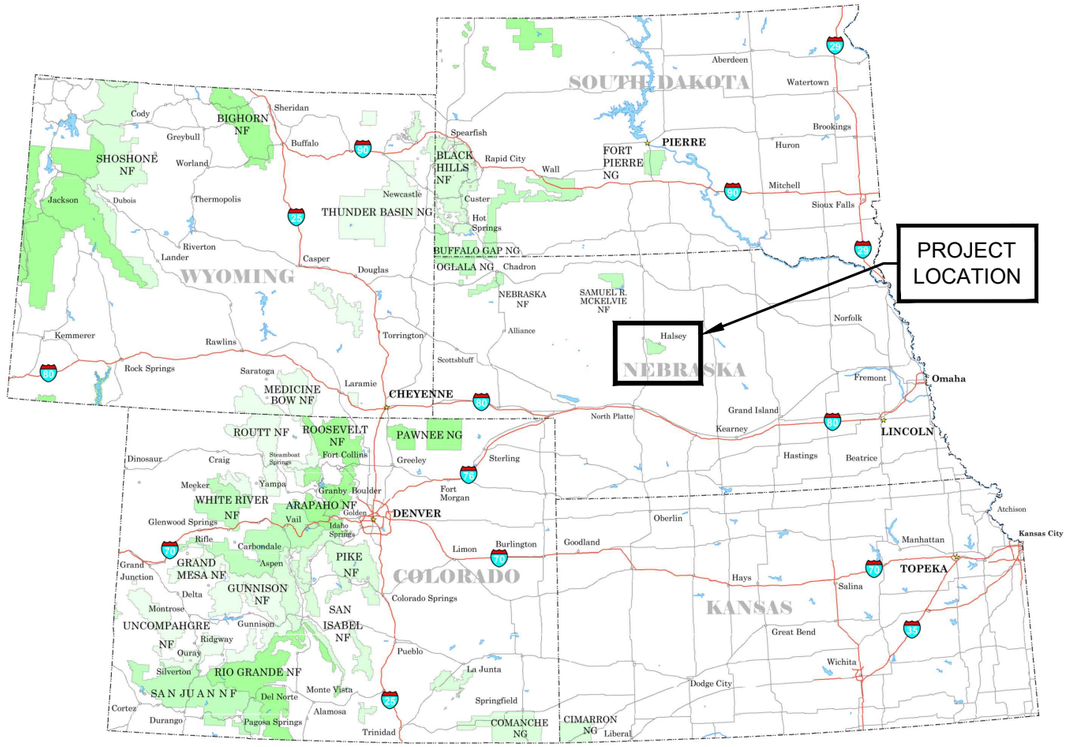


ROCKY MOUNTAIN REGION

# UNITED STATES DEPARTMENT OF AGRICULTURE
# FOREST SERVICE

ROCKY MOUNTAIN REGION

NEBRASKA NATIONAL FORESTS & GRASSLANDS

BESSEY RANGER DISTRICT
HALSEY, NEBRASKA

# BESSEY RECREATION SITE IRRIGATION IMPROVEMENTS FINAL

UNITED STATES DEPARTMENT OF AGRICULTURE
FOREST SERVICE
**R2**
**ROCKY MOUNTAIN REGION**

STAMPS, LOGOS, AND SEALS

| NO. | REVISION / ISSUE | DATE |
|---|---|---|
| 3 | | |
| 2 | | |
| 1 | | |

PROJECT NAME
**BESSEY RECREATION SITE - IRRIGATION IMPROVEMENTS**
**NEBRASKA NATIONAL FOREST & GRASSLANDS**
**BESSEY RANGER DISTRICT**

DRAWING TITLE
TITLE SHEET

## INDEX


| SHEET | SUB SHEET | TITLE OF SHEET |
|---|---|---|
| 1. | G1.0 | TITLE SHEET |
| 2. | G2.0 | SYMBOLS, ABBREVIATIONS & GENERAL NOTES |
| 3. | D1.0 | DEMOLITION PLAN - DAY-USE SITE |
| 4. | D1.1 | DEMOLITION PLAN - GROUP SITE |
| 5. | D1.2 | DEMOLITION PLAN - VALVE BOX & WELL DETAILS |
| 6. | U1.0 | EXISTING UTILITY PLAN - DAY-USE AREA |
| 7. | U1.1 | EXISTING UTILITY PLAN - GROUP-SITE AREA |
| 8. | L1.0 | IRRIGATION SITE PLAN - OVERVIEW |
| 9. | L1.1 | IRRIGATION SITE PLAN - DAY-USE AREA OVERVIEW |
| 10. | L1.2 | IRRIGATION SITE PLAN - NORTH - ZONES #1 - 2 |
| 11. | L1.3 | IRRIGATION SITE PLAN - SOUTH - ZONES #3 - 6 |
| 12. | L1.4 | IRRIGATION SITE PLAN - CENTRAL - ZONES #7 - 9 |
| 13. | L1.5 | IRRIGATION SITE PLAN - EAST - ZONES #10 - 11(OPTION BID ITEM) |
| 14. | L1.6 | IRRIGATION SITE PLAN - SOUTH-WEST - ZONES #12 - 13 (OPTION BID ITEM) |
| 15. | L1.7 | IRRIGATION SITE PLAN - NORTH-WEST - ZONES #14 (OPTION BID ITEM) |
| 16. | L1.8 | IRRIGATION SITE PLAN - GROUP SITE (OPTIONAL ITEM) |
| 17. | L2.0 | TYPICAL WELL DETAILS |
| 18. | L2.1 | TYPICAL VALVE & SPRINKLER HEAD DETAILS |
| 19. | L2.2 | TYPICAL TRENCHING DETAILS |
| 20. | L2.3 | CONTROLS, TANK, AND VALVE PLAN DETAILS - DAY-USE |
| 21. | L2.4 | CONTROLS, TANK, AND VALVE PLAN DETAILS - GROUP SITE |
| 22. | L2.5 | IRRIGATION TANK, CONTROLLER & ELECTRICAL DETAILS |
| 23. | L2.6 | IRRIGATION TANK, CONTROLLER, ELECTRICAL & STORAGE SHED DETAILS |
| 24. | L3.0 | TEMPORARY EROSION CONTROL DETAILS |


I HAVE REVIEWED THE TECHNICAL ASPECTS OF THESE DRAWINGS:

PROJECT MANAGER — DATE

FOREST ENGINEER — DATE

THESE DRAWINGS COMPLY WITH THE FOREST PLAN AND PROJECT SPECIFIC NEPA DOCUMENTATION:

DISTRICT RANGER — DATE

FOREST SUPERVISOR — DATE

RECOMMENDED BY:

ENGINEERING/REGIONAL SPECIALIST [FSP MANAGER] — DATE

APPROVED BY:

REGIONAL ENGINEER — DATE

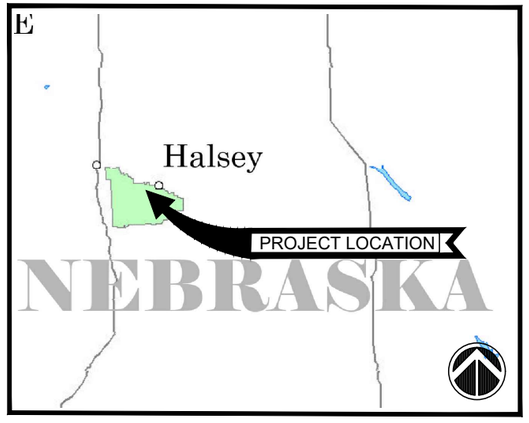


## PROJECT LOCATION

PROJECT ADDRESS
40637 RIVER LOOP, HALSEY, NE 69142

LATITUDE: 41°54'02.64"N
LONGITUDE: 100°17'54.43"W

ARCHIVE NO.

DESIGNER: J.SMITH
CHECKED:
DATE: 05/2024
SUB SHEET NO.: G1.0
SHEET: 01 OF 24

5/28/24 09:11 JAREDASMITH C:\USERS\JAREDASMITH\DOCUMENTS\AUTOCAD__PROJECTS\NEBRASKANF\BESSEY\BESSEY_COVER.DWG;

## GENERAL NOTES

1. ALL WORK TO CONFORM TO FOREST SERVICE, STATE, AND COUNTY CODES, LAWS, AND REGULATIONS.
2. CONTRACTOR SHALL COORDINATE ACTIVITIES WITH AFFECTED UTILITY COMPANIES AND SHALL NOTIFY THE UTILITY NOTIFICATION CENTER (811) AT LEAST 48 HOURS PRIOR TO THE START OF CONSTRUCTION ACTIVITIES.
3. ALL CONSTRUCTION ACTIVITIES SHALL BE IN COMPLIANCE WITH CURRENT INTERNATIONAL BUILDING CODES AND STATE OF NEBRASKA ON-SITE WASTEWATER REGULATIONS.
4. CONTRACTOR IS RESPONSIBLE FOR NOTIFYING CONTRACTING OFFICER (CO) 72 BUSINESS HOURS IN ADVANCE OF ANY POTENTIAL DISRUPTIONS TO UTILITY SERVICES OR PROGRAMMED VISITOR ACTIVITIES.
5. CONTRACTOR SHALL TAKE ALL REQUIRED AND NECESSARY PRECAUTIONS TO PROTECT ADJACENT PUBLIC AND PRIVATE LANDS FROM STORM WATER RUN-OFF OR DEBRIS AND EXCESSIVE DUST.
6. CONTRACTOR SHALL REMOVE ANY MUD OR CONSTRUCTION DEBRIS TRACKED ONTO TRAILS, PARKING LOTS OR ROADWAYS WITHIN 24 HOURS.
7. LAYOUT AND ALIGNMENT OF ALL IRRIGATION ALIGNMENTS TO BE FIELD STAKED BY CONTRACTOR, UNLESS OTHERWISE NOTED, AND APPROVED BY CO PRIOR TO INSTALLATION.
8. CONTRACTOR TO PROVIDE ALL TEMPORARY BRACING, SUPPORTS, SHORING, ETC. AS NEEDED FOR CONSTRUCTION AND PER ALL LOCAL CODES.
9. DO NOT SCALE OR DIGITIZE FROM HARD COPY DRAWINGS.
10. CONTRACTOR TO VERIFY ALL QUANTITIES AND DIMENSIONS.
11. GRADES OF REVEGETATED AREAS TO PROVIDE SMOOTH SLOPE TRANSITIONS AS INDICATED. NOTIFY CO OF ANY CONFLICTS IMMEDIATELY.
12. ALL ROUTES SHALL ADHERE TO ALL FEDERAL ACCESSIBILITY GUIDELINES (FSORAG, ABA, ETC.)

## DEMOLITION NOTES

1. CONTRACTOR IS RESPONSIBLE FOR VERIFYING SITE CONDITIONS PRIOR TO COMMENCING DEMOLITION. NOTIFY CONTRACTING OFFICER (CO) IMMEDIATELY OF ANY CONFLICTS OR CONDITIONS THAT VARY FROM THE INFORMATION PROVIDED.
2. CONTRACTOR SHALL PROTECT ALL EXISTING FEATURES THAT ARE NOT TO BE REMOVED ADJACENT TO THE CONSTRUCTION AREA INCLUDING, BUT NOT LIMITED TO, ADJACENT BUILDINGS, FOUNDATIONS WALLS, CURBS, AND ABOVE AND BELOW GROUND UTILITIES. ANY DAMAGE TO FINISH OR FOOTINGS TO BE REPAIRED BY CONTRACTOR AT CONTRACTOR'S EXPENSE.
3. EXISTING TREES TO REMAIN UNLESS OTHERWISE INDICATED, REPORT CONFLICTS TO CO IMMEDIATELY.
4. MITIGATION FOR ANY DAMAGED EXISTING TREES TO BE MITIGATED PER SPECIFICATIONS.
5. TREE PROTECTION MEASURES TO BE IN PLACE PRIOR TO COMMENCING DEMOLITION.
6. WITHIN THE DRIP LINE OR ZONE OF ANY PROTECTED EXISTING TREE, THERE SHALL BE NO CUT OR FILL OVER FOUR-INCH DEPTH.
7. NO TREE DAMAGING ATTACHMENTS, WIRES, SIGNS, OR PERMITS MAY BE FASTENED TO ANY TREE.
8. CONTRACTOR IS RESPONSIBLE FOR REMOVAL OF ALL EXCESS MATERIALS.
9. FOR EXCAVATION/DEMOLITION OCCURRING DIRECTLY ADJACENT TO ANY FOOTINGS, CONTRACTOR TO SHORE OR SECURE FOOTINGS TO PREVENT EROSION OF SUB-GRADE MATERIAL.
10. UPON REMOVAL OF ALL ITEMS, ALL IMPACTED AREAS TO BE FILLED, AMENDED AND COMPACTED AS REQUIRED BY EACH TYPE OF NEW CONSTRUCTION.
11. DEMOLITION LIMITS SHOWN ARE APPROXIMATE AND ARE FOR GENERAL REFERENCE ONLY. UTILITIES MAY EXTEND BEYOND LIMIT. SEE UTILITY PLANS OR SITE PLANS FOR EXACT OR APPROXIMATE LOCATIONS.
12. CONTRACTOR IS RESPONSIBLE FOR ANY DAMAGE TO ANY ON-SITE, OFF-SITE, PUBLIC OR PRIVATE FACILITY OR FEATURE AS A RESULT OF THE CONSTRUCTION PROCESS FOR THIS PROJECT.
13. TEMPORARY FENCING SHOWN IN RECOMMENDED LOCATIONS ONLY. CONTRACTOR TO PROVIDE PROPOSED TEMPORARY FENCING PLAN TO PROVIDE SUFFICIENT SPACE FOR CONSTRUCTION OPERATIONS WHILE MAINTAINING SAFE ACCESS TO OTHER NATIONAL FOREST USE AREAS.

## TYPICAL SYMBOLS & INDICATORS

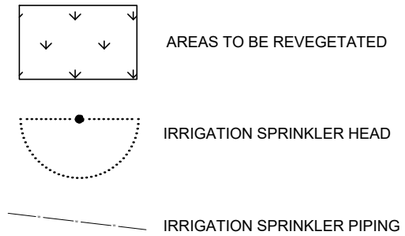


## REFERENCES

SECTION / ELEVATION

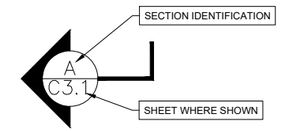


DETAIL

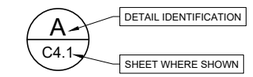


## ABBREVIATIONS

| | |
|---|---|
| & | AND |
| @ | AT |
| ℄ | CENTERLINE |
| Ø | DIAMETER |
| # | POUND OR NUMBER |
| AB | ANCHOR BOLT |
| AD | AREA DRAIN |
| ADDM | ADDENDUM |
| ADJ | ADJUSTABLE |
| AGG | AGGREGATE |
| ALUM | ALUMINUM |
| ALT | ALTERNATE |
| APPROX. | APPROXIMATE |
| ASPH | ASPHALT |
| ARCH | ARCHITECT(URAL) |
| BOC | BOTTOM OF CURB |
| BOW | BOTTOM OF WALL |
| BOS | BOTTOM OF STAIR |
| BEV | BEVEL |
| BITUM | BITUMINOUS |
| BLDG | BUILDING |
| BM | BENCHMARK |
| BRKT | BRACKET |
| BOT | BOTTOM |
| BSMT | BASEMENT |
| BTWN | BETWEEN |
| BRLP | BURLAP |
| CB | CATCH BASIN |
| CF | CUBIC FOOT |
| CHAM | CHAMFER |
| CIP | CAST-IN-PLACE |
| CJ | CONTROL JOINT |
| CL | CENTERLINE |
| CMU | CONCRETE MASON UNIT |
| CO | CONTRACTING OFFICER |
| COL | COLUMN |
| COMP | COMPACTED |
| CONC | CONCRETE |
| COND | CONDITION |
| CONSTR | CONSTRUCTION |
| CONT | CONTINUOUS |
| CONTR | CONTRACTOR |
| CTR | CENTER |
| CY | CUBIC YARD |
| DPTH | DEPTH (DEEP) |
| DBL | DOUBLE |
| DEMO | DEMOLISH/DEMOLITION |
| DEP | DEPRESSED |
| DEPT | DEPARTMENT |
| DET | DETAIL |
| DIA | DIAMETER |
| DIM | DIMENSIONS |
| DN | DOWN |
| DR | DOOR |
| DWG | DRAWING |
| E | EAST |
| EA | EACH |
| EJ | EXPANSION JOINT |
| ELEV | ELEVATION |
| ELEC | ELECTRICAL |
| ENCL | ENCLOSURE |
| EQ | EQUAL |
| EW | EACH WAY |
| EQUIV | EQUIVALENT |
| EXIST/EX | EXISTING |
| FD | FLOOR DRAIN |
| FND | FOUNDATION |
| FF | FACE FOOT |
| FFE | FINISHED FLOOR ELEVATION |
| FIN | FINISHED |
| FG | FINISHED GRADE |
| FL | FLOOR |
| FLASH | FLASHING |
| FT | FOOT/FEET |
| FTG | FOOTING |
| GA | GAUGE |
| GALV | GALVANIZED |
| GC | GENERAL CONTRACTOR |
| GLULAM | GLUE LAMINATED |
| GND | GROUND |
| GR | GRADE |
| HT | HEIGHT |
| HORIZ | HORIZONTAL |
| HP | HIGH POINT |
| INSUL | INSULATION |
| INT | INTEGRAL |
| INV | INVERT |
| JST | JOIST |
| JNT | JOINT |
| KJ | KEYED JOINT |
| LP | LOW POINT |
| LF | LINEAL FOOT |
| LBS | POUNDS |
| MAX | MAXIMUM |
| ME | MATCH EXISTING |
| MECH | MECHANICAL |
| MEMB | MEMBRANE |
| MED | MEDIUM |
| MET | METAL |
| MFG | MANUFACTURER |
| MH | MANHOLE |
| MID | MIDDLE |
| MIN | MINIMUM |
| MIR | MIRROR |
| MISC | MISCELLANEOUS |
| MTD | MOUNTED |
| MTG | MOUNTING |
| N | NORTH |
| NIC | NOT IN CONTRACT |
| NO | NUMBER |
| NOM | NOMINAL |
| NTS | NOT TO SCALE |
| OA | OVERALL |
| OC | ON CENTER |
| OPP | OPPOSITE |
| OH | OVERHEAD |
| PA | PLANTING AREA |
| PC | PIECE |
| PL | PROPERTY LINE |
| PLMB | PLUMBING |
| PNL | PANEL |
| POL | POLISHED |
| PR | PAIR |
| PRCST | PRE-CAST |
| PT | POINT OF TANGENCY |
| PTD | PAINTED |
| PVC | POLYVINYL CHLORIDE |
| PVMT | PAVEMENT |
| RAD | RADIUS |
| REF | REFERENCE |
| REINF | REINFORCING |
| REQ | REQUIRED |
| RESIL | RESILIENT |
| S | SOUTH |
| SC | SCALE |
| SCHD | SCHEDULE |
| SCRN | SCREEN |
| SECT | SECTION |
| SF | SQUARE FOOT |
| SHT | SHEET |
| SQ | SQUARE |
| SST | STAINLESS STEEL |
| STA | STATION |
| STD | STANDARD |
| STL | STEEL |
| STRC | STRUCTURAL |
| SYM | SYMMETRICAL |
| TOC | TOP OF CURB |
| TOS | TOP OF SLOPE |
| TOW | TOP OF WALL |
| TYP | TYPICAL |
| VAR | VARIES |
| VERT | VERTICAL |
| W | WEST |
| W/ | WITH |
| WID | WIDTH |
| WL | WATER LEVEL |
| W/O | WITHOUT |
| WT | WEIGHT |
| WWM | WELDED WIRE MESH |

UNITED STATES DEPARTMENT OF AGRICULTURE

FOREST SERVICE

**R2**

**ROCKY MOUNTAIN REGION**

STAMPS, LOGOS, AND SEALS

Rocky Mountain Region CENTER for DESIGN & INTERPRETATION CDI

| NO. | REVISION / ISSUE | DATE |
|---|---|---|
| 3 | | |
| 2 | | |
| 1 | | |

PROJECT NAME

**BESSEY RECREATION SITE - IRRIGATION IMPROVEMENTS**

**NEBRASKA NATIONAL FOREST & GRASSLANDS**

**BESSEY RANGER DISTRICT**

DRAWING TITLE

SYMBOLS, ABBREVIATIONS, & NOTES

ARCHIVE NO.

DESIGNER J. SMITH

CHECKED

SUB SHEET NO. G2.0

DATE 05/2024

SHEET 02 OF 24

5/17/24 14:29 JAREDASMITH C:\USERS\JAREDASMITH\DOCUMENTS\AUTOCAD_PROJECTS\NEBRASKANF\BESSEY\TYP_SYM&ABBREV&NOTES.DWG;

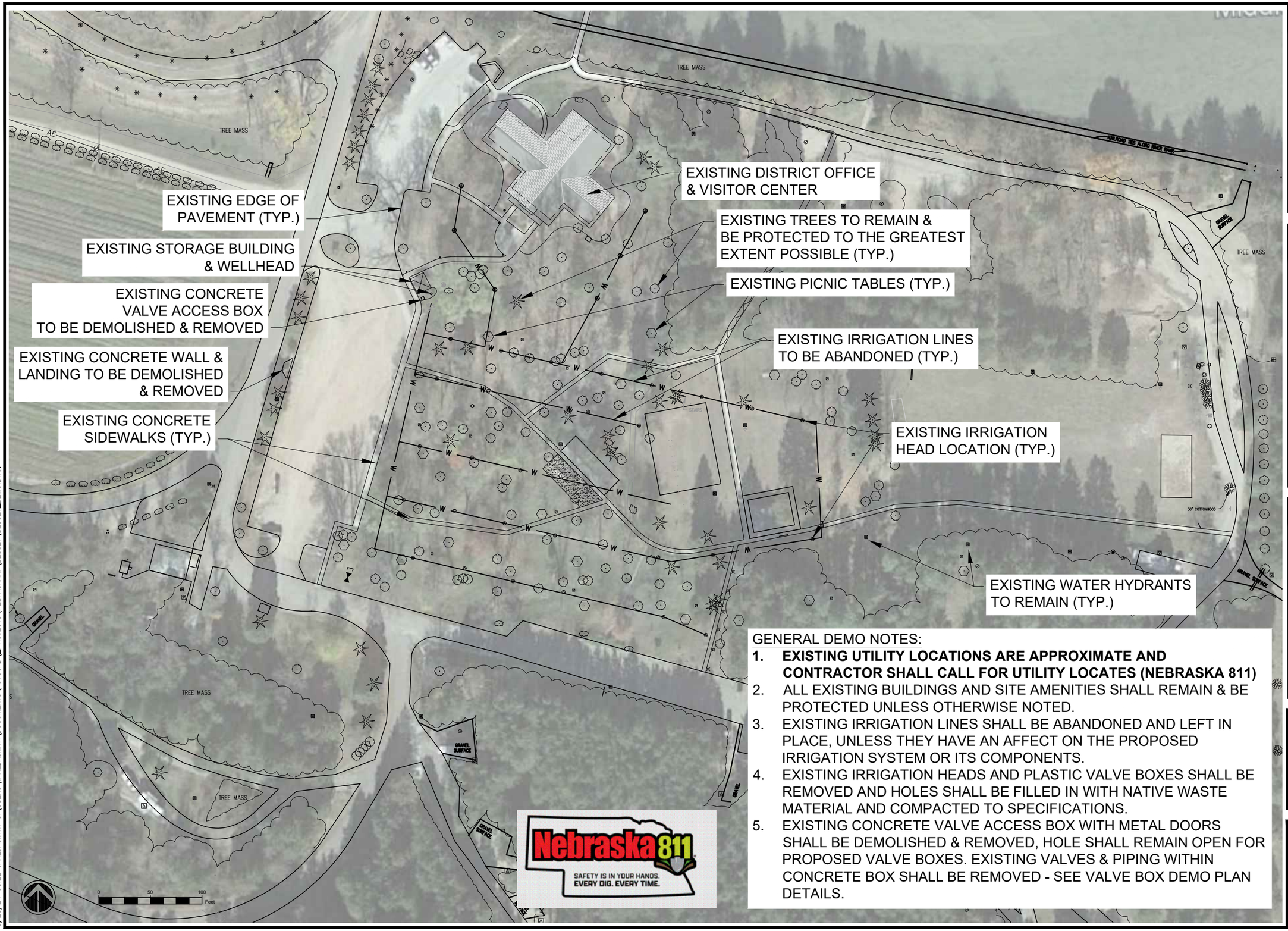


GENERAL DEMO NOTES:

1. **EXISTING UTILITY LOCATIONS ARE APPROXIMATE AND CONTRACTOR SHALL CALL FOR UTILITY LOCATES (NEBRASKA 811)**
2. ALL EXISTING BUILDINGS AND SITE AMENITIES SHALL REMAIN & BE PROTECTED UNLESS OTHERWISE NOTED.
3. EXISTING IRRIGATION LINES SHALL BE ABANDONED AND LEFT IN PLACE, UNLESS THEY HAVE AN AFFECT ON THE PROPOSED IRRIGATION SYSTEM OR ITS COMPONENTS.
4. EXISTING IRRIGATION HEADS AND PLASTIC VALVE BOXES SHALL BE REMOVED AND HOLES SHALL BE FILLED IN WITH NATIVE WASTE MATERIAL AND COMPACTED TO SPECIFICATIONS.
5. EXISTING CONCRETE VALVE ACCESS BOX WITH METAL DOORS SHALL BE DEMOLISHED & REMOVED, HOLE SHALL REMAIN OPEN FOR PROPOSED VALVE BOXES. EXISTING VALVES & PIPING WITHIN CONCRETE BOX SHALL BE REMOVED - SEE VALVE BOX DEMO PLAN DETAILS.

Nebraska 811
SAFETY IS IN YOUR HANDS. EVERY DIG. EVERY TIME.

UNITED STATES DEPARTMENT OF AGRICULTURE

FOREST SERVICE

**R2**

**ROCKY MOUNTAIN REGION**

STAMPS, LOGOS, AND SEALS

Rocky Mountain Region CENTER for DESIGN & INTERPRETATION CDI

| NO. | REVISION / ISSUE | DATE |
|---|---|---|
| 3 | | |
| 2 | | |
| 1 | | |

PROJECT NAME

**BESSEY RECREATION SITE - IRRIGATION IMPROVEMENTS**

**NEBRASKA NATIONAL FOREST & GRASSLANDS**

**BESSEY RANGER DISTRICT**

DRAWING TITLE

DEMOLITION PLAN - DAY-USE

ARCHIVE NO.

DESIGNER J.SMITH

CHECKED

SUB SHEET NO. D1.0

DATE 05/2024

SHEET 03 OF 25

5/28/24 08:22 JAREDASMITH C:\USERS\JAREDASMITH\DOCUMENTS\AUTOCAD__PROJECTS\NEBRASKANF\BESSEY\BESSEY_DEMO.DWG;

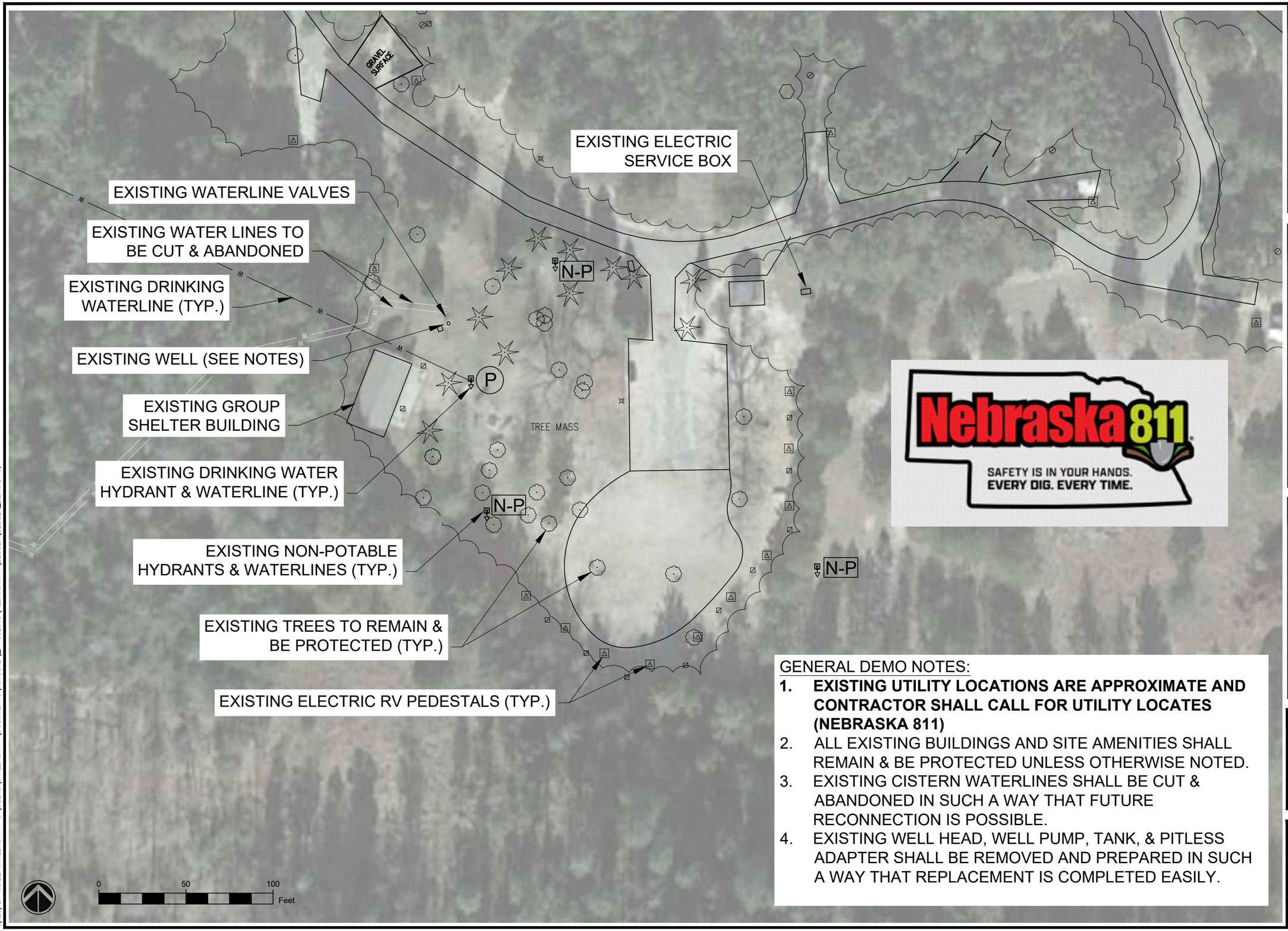


GENERAL DEMO NOTES:

1. **EXISTING UTILITY LOCATIONS ARE APPROXIMATE AND CONTRACTOR SHALL CALL FOR UTILITY LOCATES (NEBRASKA 811)**
2. ALL EXISTING BUILDINGS AND SITE AMENITIES SHALL REMAIN & BE PROTECTED UNLESS OTHERWISE NOTED.
3. EXISTING CISTERN WATERLINES SHALL BE CUT & ABANDONED IN SUCH A WAY THAT FUTURE RECONNECTION IS POSSIBLE.
4. EXISTING WELL HEAD, WELL PUMP, TANK, & PITLESS ADAPTER SHALL BE REMOVED AND PREPARED IN SUCH A WAY THAT REPLACEMENT IS COMPLETED EASILY.

Nebraska 811
SAFETY IS IN YOUR HANDS.
EVERY DIG. EVERY TIME.

UNITED STATES DEPARTMENT OF AGRICULTURE

FOREST SERVICE

**R2**

**ROCKY MOUNTAIN REGION**

STAMPS, LOGOS, AND SEALS

Rocky Mountain Region CENTER for DESIGN & INTERPRETATION CDI

| NO. | REVISION / ISSUE | DATE |
|---|---|---|
| 3 | | |
| 2 | | |
| 1 | | |

PROJECT NAME

**BESSEY RECREATION SITE - IRRIGATION IMPROVEMENTS**

**NEBRASKA NATIONAL FOREST & GRASSLANDS**

**BESSEY RANGER DISTRICT**

DRAWING TITLE

DEMOLITION PLAN - GROUP SITE

ARCHIVE NO.

DESIGNER J.SMITH

CHECKED

SUB SHEET NO. D1.1

DATE 05/2024

SHEET 04 OF 25

5/28/24 08:22 JAREDASMITH C:\USERS\JAREDASMITH\DOCUMENTS\AUTOCAD__PROJECTS\NEBRASKANF\BESSEY\BESSEY_DEMO.DWG;

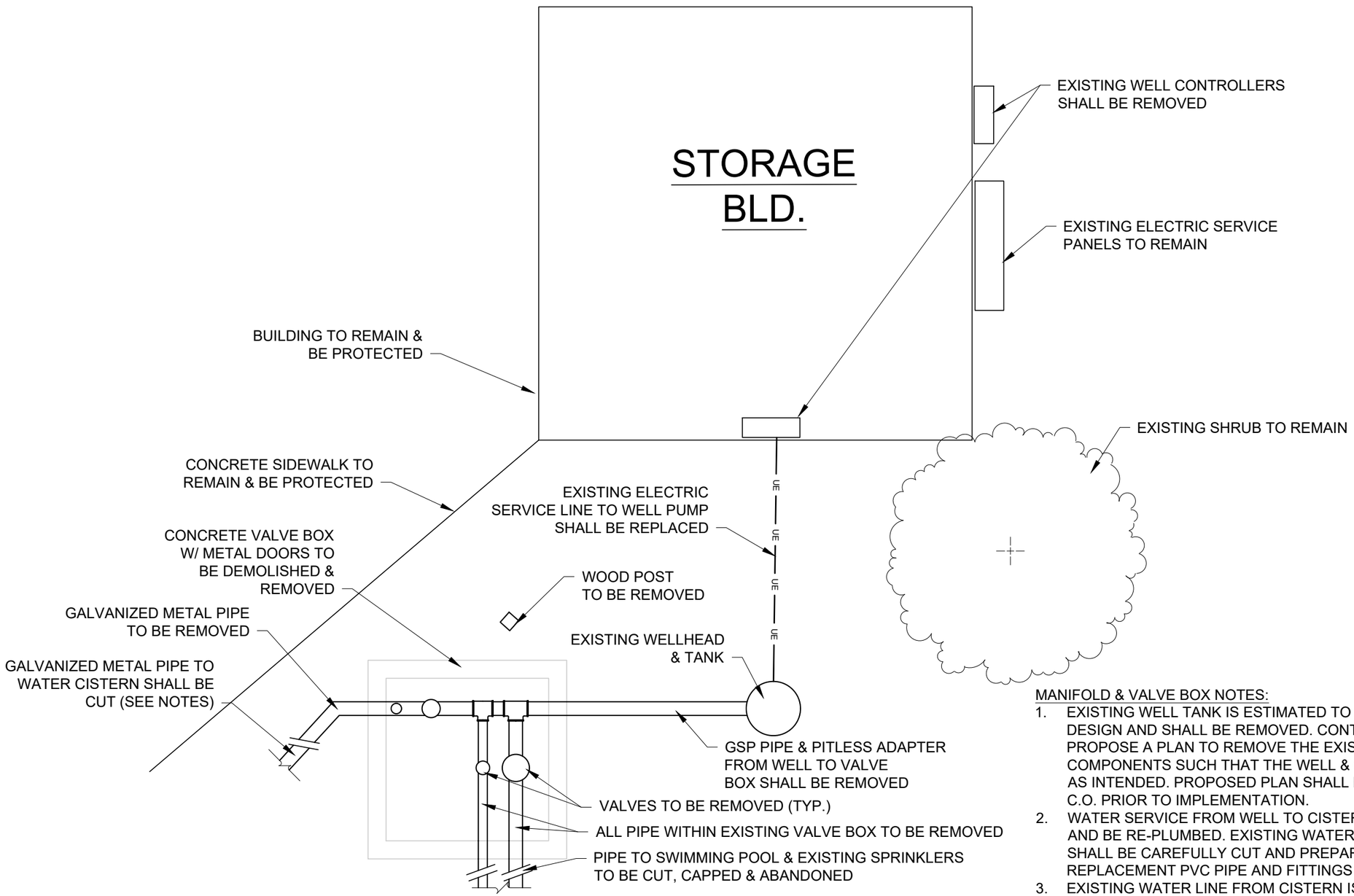


A / D1.2 VALVE BOX & VALVE DEMOLITION DETAIL

NO SCALE

MANIFOLD & VALVE BOX NOTES:

1. EXISTING WELL TANK IS ESTIMATED TO BE A STACKED-BOWL DESIGN AND SHALL BE REMOVED. CONTRACTOR SHALL PROPOSE A PLAN TO REMOVE THE EXISTING TANK & COMPONENTS SUCH THAT THE WELL & CASING FUNCTION AS INTENDED. PROPOSED PLAN SHALL BE APPROVED BY C.O. PRIOR TO IMPLEMENTATION.
2. WATER SERVICE FROM WELL TO CISTERN SHALL REMAIN AND BE RE-PLUMBED. EXISTING WATER LINE TO CISTERN SHALL BE CAREFULLY CUT AND PREPARED SUCH THAT REPLACEMENT PVC PIPE AND FITTINGS CAN BE ATTACHED.
3. EXISTING WATER LINE FROM CISTERN IS LIKELY TO BE GALVANIZED STEEL PIPING. CONTRACTOR SHALL CONFIRM.
4. CONCRETE VALVE BOX WITH METAL DOORS SHALL BE DEMOLISHED AND REMOVED.
5. EXISTING ELECTRIC WIRE FROM PUMP CONTROLLER TO WELL PUMP SHALL BE REMOVED.
6. ALL MATERIALS TO BE REMOVED MUST BE DISPOSED OF OFF NATIONAL FOREST SERVICE LANDS AT AN APPROVED FACILITY BY THE CONTRACTOR.

UNITED STATES DEPARTMENT OF AGRICULTURE

FOREST SERVICE

**R2**

**ROCKY MOUNTAIN REGION**

STAMPS, LOGOS, AND SEALS

Rocky Mountain Region CENTER for DESIGN & INTERPRETATION CDI

| NO. | REVISION / ISSUE | DATE |
|---|---|---|
| 3 | | |
| 2 | | |
| 1 | | |

PROJECT NAME

**BESSEY RECREATION SITE - IRRIGATION IMPROVEMENTS**

**NEBRASKA NATIONAL FOREST & GRASSLANDS**

**BESSEY RANGER DISTRICT**

DRAWING TITLE

DEMOLITION PLAN - VALVE BOX & WELL DETAILS

ARCHIVE NO.

DESIGNER J.SMITH

CHECKED

SUB SHEET NO. D1.2

DATE 05/2024

SHEET 05 OF 25

5/28/24 08:22 JAREDASMITH C:\USERS\JAREDASMITH\DOCUMENTS\AUTOCAD_PROJECTS\NEBRASKANF\BESSEY\BESSEY_DEMO.DWG;

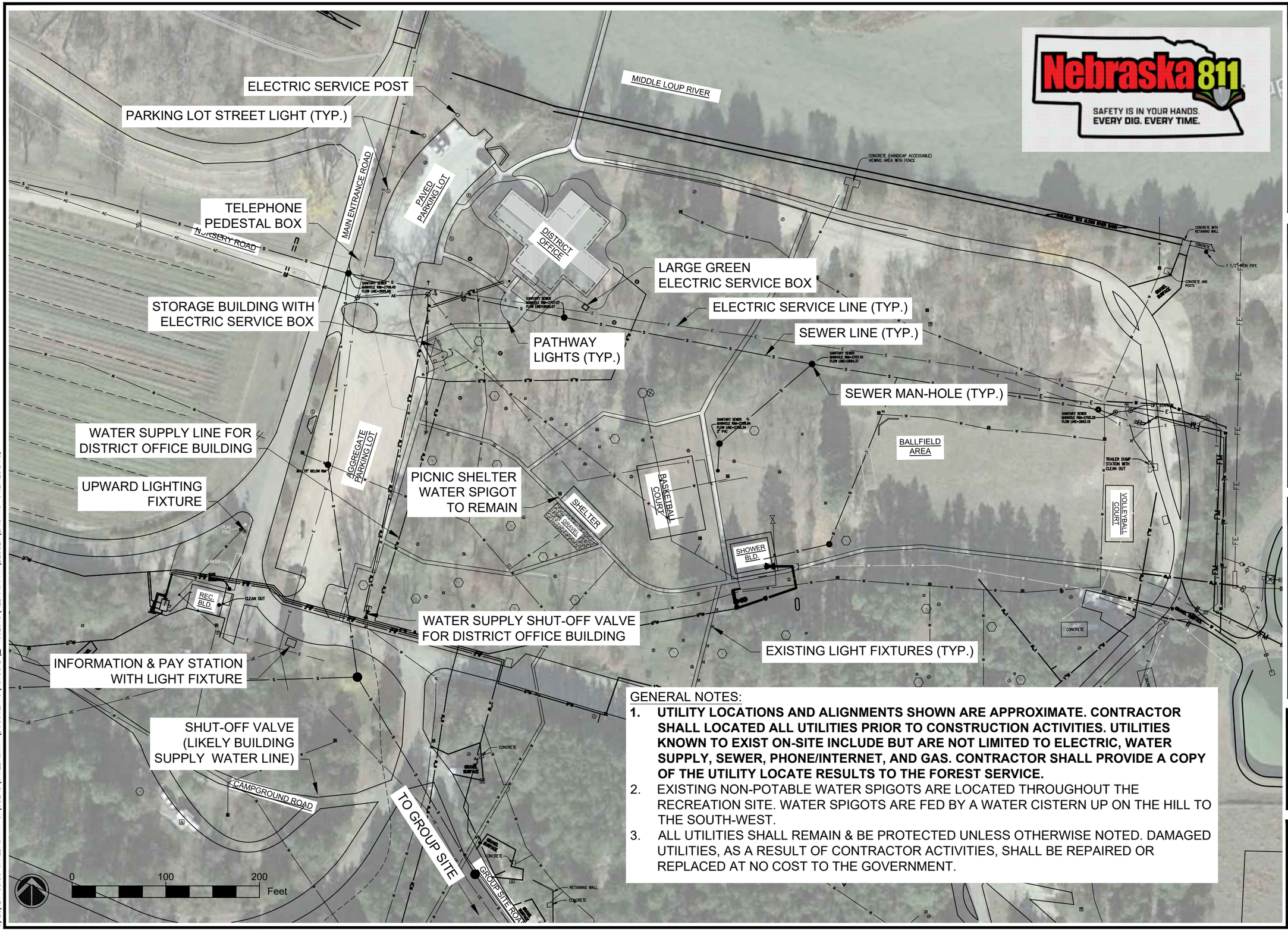


GENERAL NOTES:

1. **UTILITY LOCATIONS AND ALIGNMENTS SHOWN ARE APPROXIMATE. CONTRACTOR SHALL LOCATED ALL UTILITIES PRIOR TO CONSTRUCTION ACTIVITIES. UTILITIES KNOWN TO EXIST ON-SITE INCLUDE BUT ARE NOT LIMITED TO ELECTRIC, WATER SUPPLY, SEWER, PHONE/INTERNET, AND GAS. CONTRACTOR SHALL PROVIDE A COPY OF THE UTILITY LOCATE RESULTS TO THE FOREST SERVICE.**
2. EXISTING NON-POTABLE WATER SPIGOTS ARE LOCATED THROUGHOUT THE RECREATION SITE. WATER SPIGOTS ARE FED BY A WATER CISTERN UP ON THE HILL TO THE SOUTH-WEST.
3. ALL UTILITIES SHALL REMAIN & BE PROTECTED UNLESS OTHERWISE NOTED. DAMAGED UTILITIES, AS A RESULT OF CONTRACTOR ACTIVITIES, SHALL BE REPAIRED OR REPLACED AT NO COST TO THE GOVERNMENT.

UNITED STATES DEPARTMENT OF AGRICULTURE

FOREST SERVICE

**R2**

**ROCKY MOUNTAIN REGION**

STAMPS, LOGOS, AND SEALS

| NO. | REVISION / ISSUE | DATE |
|---|---|---|
| 3 | | |
| 2 | | |
| 1 | | |

PROJECT NAME

**BESSEY RECREATION SITE - IRRIGATION IMPROVEMENTS**

**NEBRASKA NATIONAL FOREST & GRASSLANDS**

**BESSEY RANGER DISTRICT**

DRAWING TITLE

EXISTING UTILITY PLAN DAY-USE AREA

ARCHIVE NO.

DESIGNER J.SMITH

CHECKED

DATE **05/2024**

SUB SHEET NO. **U1.0**

SHEET 06 OF **24**

5/28/24 08:30 JAREDASMITH C:\USERS\JAREDASMITH\DOCUMENTS\AUTOCAD__PROJECTS\NEBRASKANF\BESSEY\EXISTING-UTILITIES.DWG;

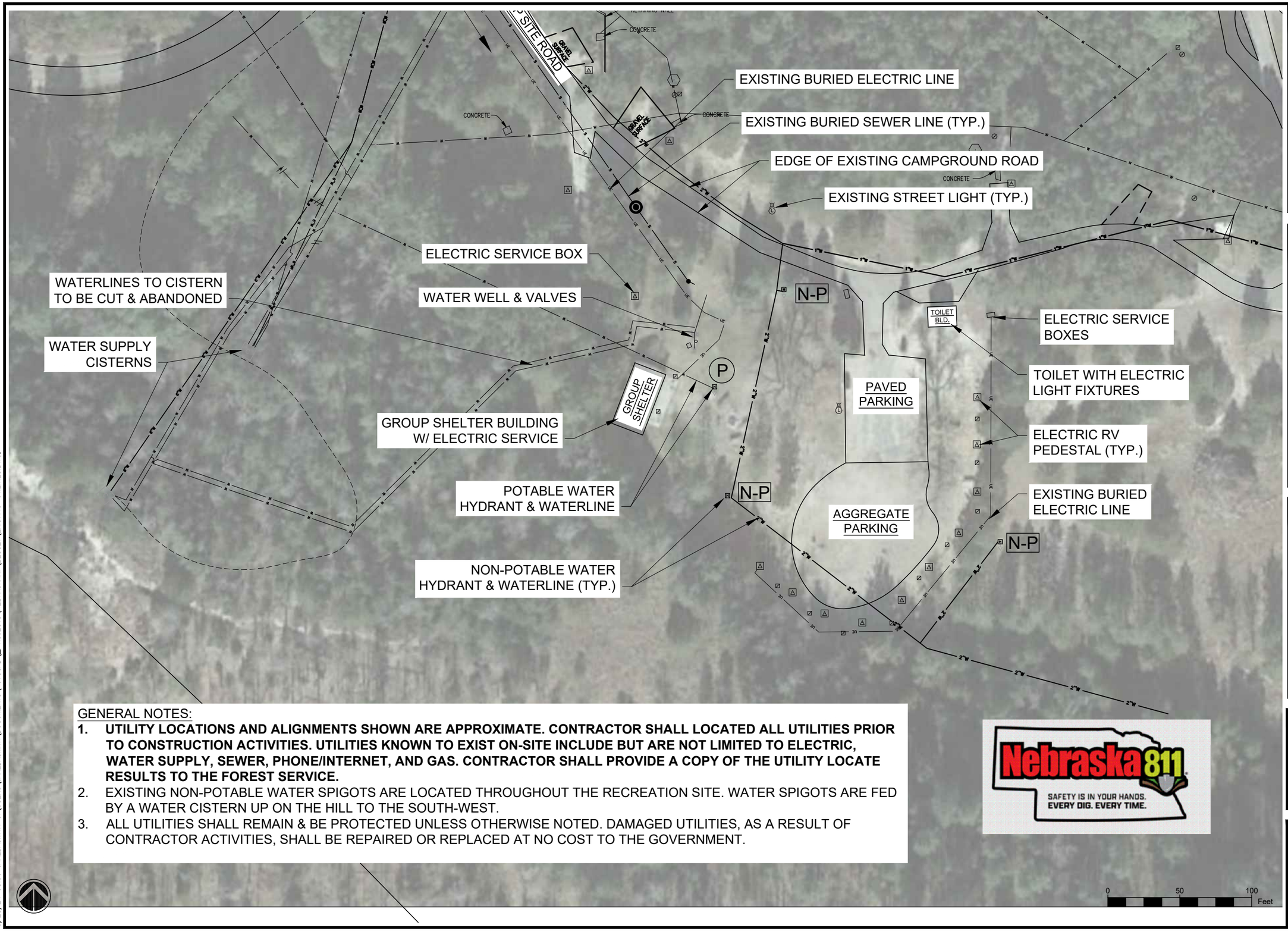


GENERAL NOTES:

1. **UTILITY LOCATIONS AND ALIGNMENTS SHOWN ARE APPROXIMATE. CONTRACTOR SHALL LOCATED ALL UTILITIES PRIOR TO CONSTRUCTION ACTIVITIES. UTILITIES KNOWN TO EXIST ON-SITE INCLUDE BUT ARE NOT LIMITED TO ELECTRIC, WATER SUPPLY, SEWER, PHONE/INTERNET, AND GAS. CONTRACTOR SHALL PROVIDE A COPY OF THE UTILITY LOCATE RESULTS TO THE FOREST SERVICE.**
2. EXISTING NON-POTABLE WATER SPIGOTS ARE LOCATED THROUGHOUT THE RECREATION SITE. WATER SPIGOTS ARE FED BY A WATER CISTERN UP ON THE HILL TO THE SOUTH-WEST.
3. ALL UTILITIES SHALL REMAIN & BE PROTECTED UNLESS OTHERWISE NOTED. DAMAGED UTILITIES, AS A RESULT OF CONTRACTOR ACTIVITIES, SHALL BE REPAIRED OR REPLACED AT NO COST TO THE GOVERNMENT.

Nebraska811
SAFETY IS IN YOUR HANDS. EVERY DIG. EVERY TIME.

UNITED STATES DEPARTMENT OF AGRICULTURE

FOREST SERVICE

**R2**

**ROCKY MOUNTAIN REGION**

STAMPS, LOGOS, AND SEALS

| NO. | REVISION / ISSUE | DATE |
|---|---|---|
| 3 | | |
| 2 | | |
| 1 | | |

PROJECT NAME

**BESSEY RECREATION SITE - IRRIGATION IMPROVEMENTS**

**NEBRASKA NATIONAL FOREST & GRASSLANDS**

**BESSEY RANGER DISTRICT**

DRAWING TITLE

EXISTING UTILITY PLAN GROUP-SITE AREA

ARCHIVE NO.

DESIGNER J.SMITH

CHECKED

DATE **05/2024**

SUB SHEET NO. U1.1

SHEET 07 OF 24

5/28/24 08:30 JAREDASMITH C:\USERS\JAREDASMITH\DOCUMENTS\AUTOCAD_PROJECTS\NEBRASKANF\BESSEY\EXISTING-UTILITIES.DWG;

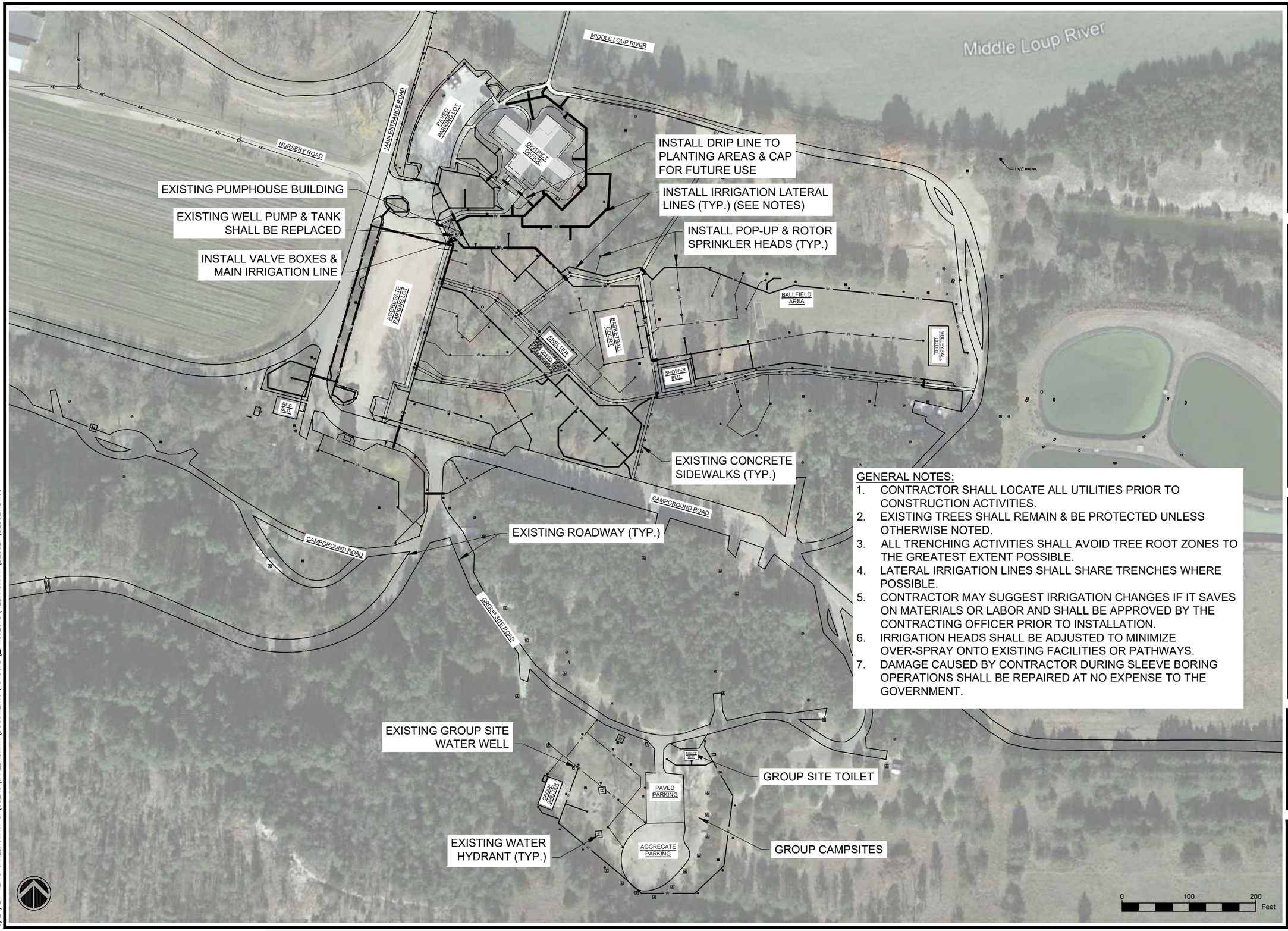


GENERAL NOTES:

1. CONTRACTOR SHALL LOCATE ALL UTILITIES PRIOR TO CONSTRUCTION ACTIVITIES.
2. EXISTING TREES SHALL REMAIN & BE PROTECTED UNLESS OTHERWISE NOTED.
3. ALL TRENCHING ACTIVITIES SHALL AVOID TREE ROOT ZONES TO THE GREATEST EXTENT POSSIBLE.
4. LATERAL IRRIGATION LINES SHALL SHARE TRENCHES WHERE POSSIBLE.
5. CONTRACTOR MAY SUGGEST IRRIGATION CHANGES IF IT SAVES ON MATERIALS OR LABOR AND SHALL BE APPROVED BY THE CONTRACTING OFFICER PRIOR TO INSTALLATION.
6. IRRIGATION HEADS SHALL BE ADJUSTED TO MINIMIZE OVER-SPRAY ONTO EXISTING FACILITIES OR PATHWAYS.
7. DAMAGE CAUSED BY CONTRACTOR DURING SLEEVE BORING OPERATIONS SHALL BE REPAIRED AT NO EXPENSE TO THE GOVERNMENT.

UNITED STATES DEPARTMENT OF AGRICULTURE

FOREST SERVICE

**R2**

**ROCKY MOUNTAIN REGION**

STAMPS, LOGOS, AND SEALS

| NO. | REVISION / ISSUE | DATE |
|---|---|---|
| 3 | | |
| 2 | | |
| 1 | | |

PROJECT NAME

**BESSEY RECREATION SITE - IRRIGATION IMPROVEMENTS**

**NEBRASKA NATIONAL FOREST & GRASSLANDS**

**BESSEY RANGER DISTRICT**

DRAWING TITLE

IRRIGATION SITE PLAN - OVERVIEW

ARCHIVE NO.

DESIGNER J.SMITH

CHECKED

DATE 05/2024

SUB SHEET NO. L1.0

SHEET 08 OF 24

5/24/24 12:13 JAREDASMITH C:\USERS\JAREDASMITH\DOCUMENTS\AUTOCAD__PROJECTS\NEBRASKANF\BESSEY\BESSEY.DWG;

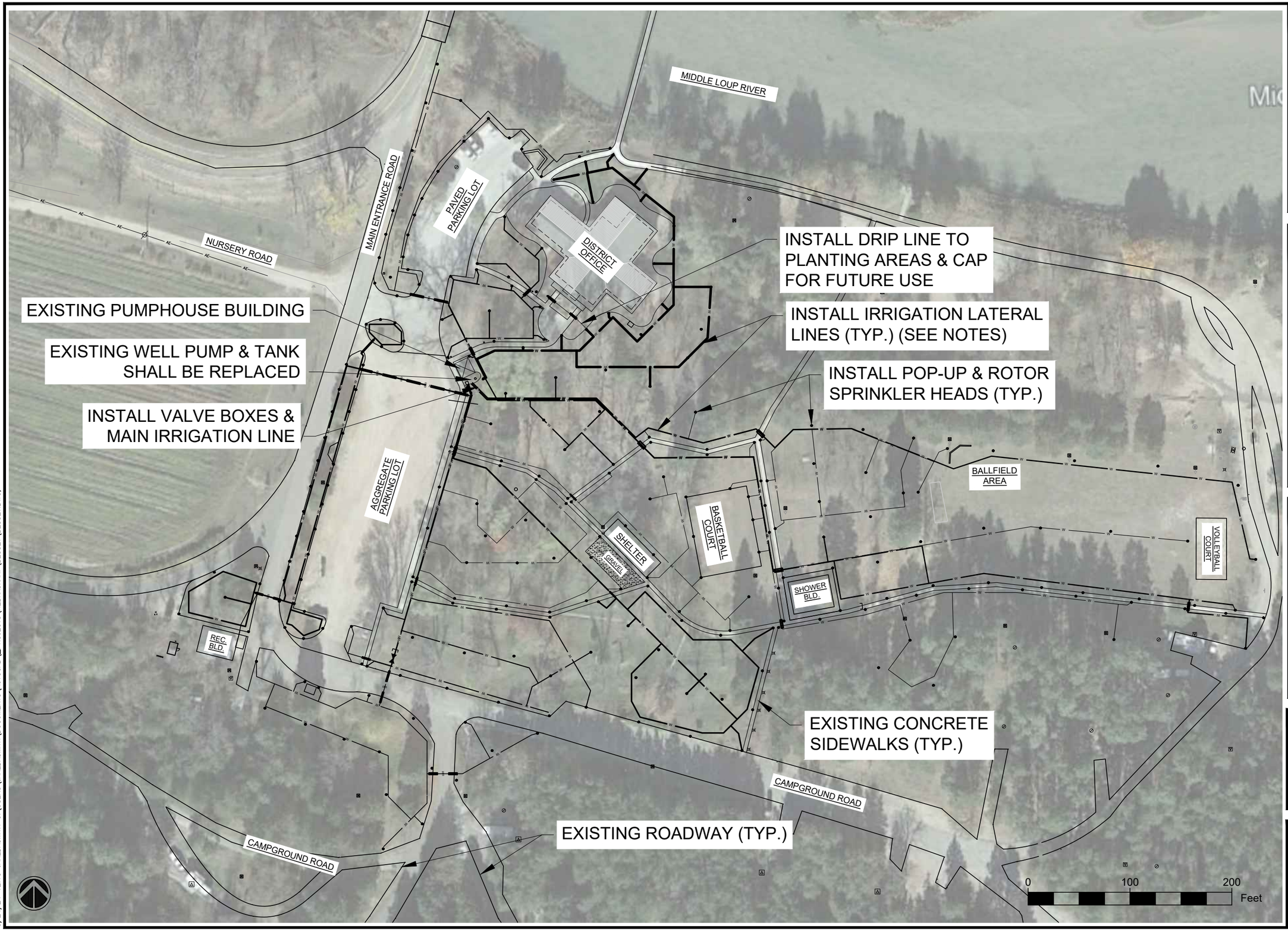


5/24/24 12:13 JAREDASMITH C:\USERS\JAREDASMITH\DOCUMENTS\AUTOCAD__PROJECTS\NEBRASKANF\BESSEY\BESSEY.DWG;

UNITED STATES DEPARTMENT OF AGRICULTURE

FOREST SERVICE

**R2**

**ROCKY MOUNTAIN REGION**

STAMPS, LOGOS, AND SEALS

| NO. | REVISION / ISSUE | DATE |
|---|---|---|
| 3 | | |
| 2 | | |
| 1 | | |

PROJECT NAME

**BESSEY RECREATION SITE - IRRIGATION IMPROVEMENTS**

**NEBRASKA NATIONAL FOREST & GRASSLANDS**

**BESSEY RANGER DISTRICT**

DRAWING TITLE

IRRIGATION SITE PLAN - DAY-USE AREA OVERVIEW

ARCHIVE NO.

DESIGNER J.SMITH

CHECKED

DATE 05/2024

SUB SHEET NO. L1.1

SHEET 09 OF 24

GENERAL NOTES:

1. LATERAL IRRIGATION LINES SHALL SHARE TRENCHES WHERE POSSIBLE.
2. IRRIGATION HEADS SHALL BE ADJUSTED TO MINIMIZE OVER-SPRAY ONTO EXISTING FACILITIES, ROADS OR PATHWAYS.
3. INSTALL SLEEVES AT 18" DEPTH MIN. FOR IRRIGATION PIPING UNDER ALL PAVEMENT.
4. DAMAGE CAUSED BY CONTRACTOR DURING SLEEVE BORING OPERATIONS SHALL BE REPAIRED AT NO EXPENSE TO THE GOVERNMENT.
5. ZONE NUMBERING IS FOR REFERENCE ONLY, CONTRACTOR SHALL DETERMINE FINAL ZONE NUMBER & LAYOUT.

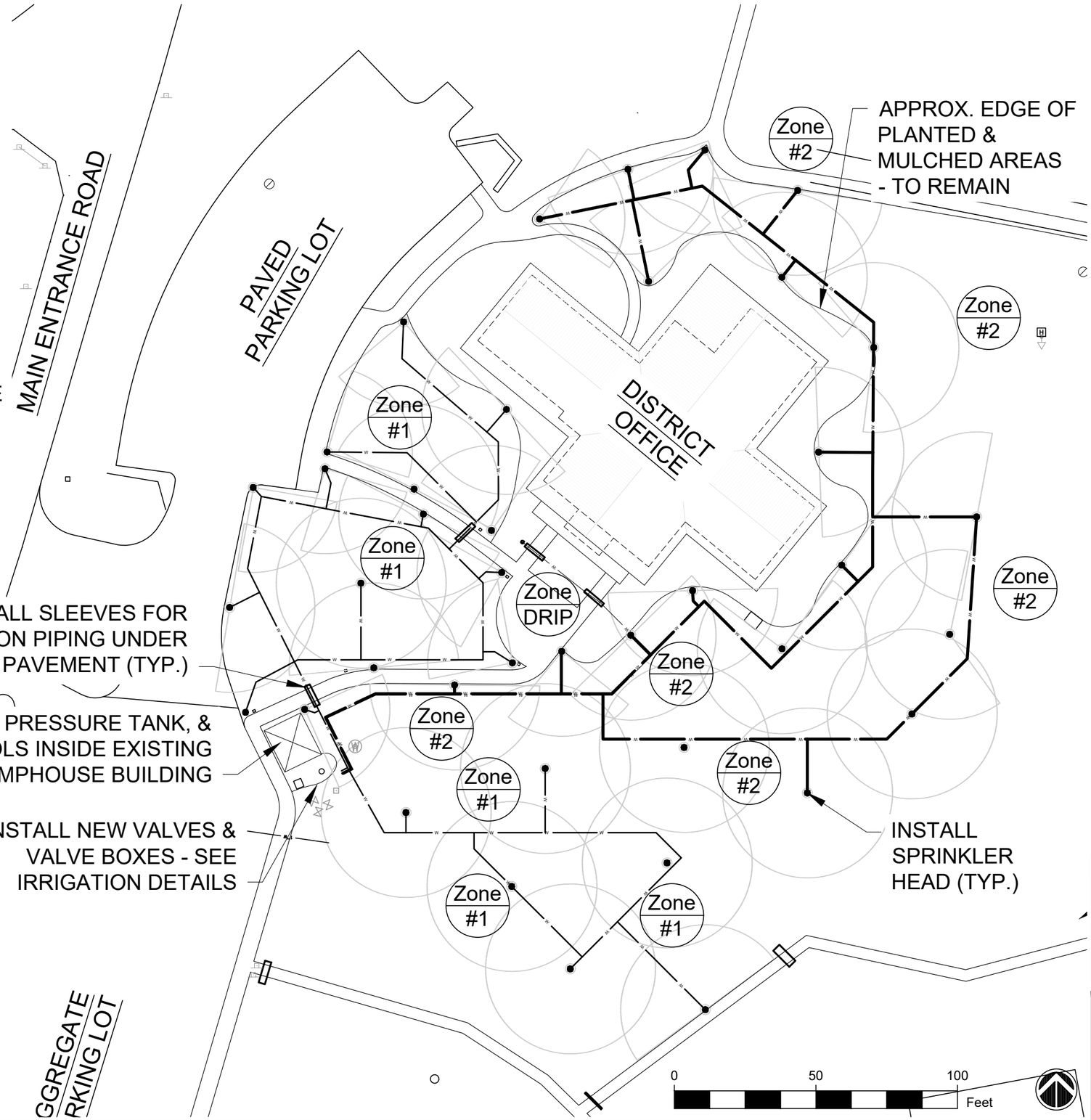


| Nozzle Schedule | MP 1000 Nozzles | | MP 3000 Nozzles | | | PGP Rotors |
|---|---|---|---|---|---|---|
| Zone # | 90° | 360° | 90° | 210° | 360° | Adj. Arc |
| 1 | - | - | 14 | - | 6 | - |
| 2 | - | - | 13 | 3 | 3 | - |
| 3 | - | - | 14 | 2 | 4 | - |
| 4 | - | - | 10 | - | 6 | - |
| 5 | - | - | 12 | 2 | 5 | - |
| 6 | - | - | 10 | - | 6 | - |
| 7 | - | - | 10 | 1 | 5 | - |
| 8 | 6 | - | 17 | 1 | 2 | - |
| 9 | - | - | 14 | 2 | 3 | - |
| TOTALS | 6 | - | 114 | 11 | 40 | - |
| Option Items | | | | | | |
| 10 | - | - | - | - | - | 5 |
| 11 | - | - | - | - | - | 4 |
| 12 | - | - | 12 | 2 | 5 | - |
| 13 | 31 | - | 4 | - | 1 | - |
| 14 | 12 | 1 | 16 | 1 | 1 | - |
| TOTALS | 43 | 1 | 32 | 3 | 7 | 9 |

UNITED STATES DEPARTMENT OF AGRICULTURE

FOREST SERVICE

**R2**

**ROCKY MOUNTAIN REGION**

STAMPS, LOGOS, AND SEALS

| NO. | REVISION / ISSUE | DATE |
|---|---|---|
| 3 | | |
| 2 | | |
| 1 | | |

PROJECT NAME

**BESSEY RECREATION SITE - IRRIGATION IMPROVEMENTS**

**NEBRASKA NATIONAL FOREST & GRASSLANDS**

**BESSEY RANGER DISTRICT**

DRAWING TITLE

IRRIGATION SITE PLAN - NORTH ZONES #1 - 2

ARCHIVE NO.

DESIGNER J.SMITH

CHECKED

DATE 05/2024

SUB SHEET NO. L1.2

SHEET 10 OF 24

5/24/24 12:13 JAREDASMITH C:\USERS\JAREDASMITH\DOCUMENTS\AUTOCAD__PROJECTS\NEBRASKANF\BESSEY\BESSEY.DWG;

GENERAL NOTES:

1. LATERAL IRRIGATION LINES SHALL SHARE TRENCHES WHERE POSSIBLE.
2. IRRIGATION HEADS SHALL BE ADJUSTED TO MINIMIZE OVER-SPRAY ONTO EXISTING FACILITIES, ROADS OR PATHWAYS.
3. DAMAGE CAUSED BY CONTRACTOR DURING SLEEVE BORING OPERATIONS SHALL BE REPLACED AT NO EXPENSE TO THE GOVERNMENT.
4. ZONE NUMBERING IS FOR REFERENCE ONLY, CONTRACTOR SHALL DETERMINE FINAL ZONE NUMBER & LAYOUT.

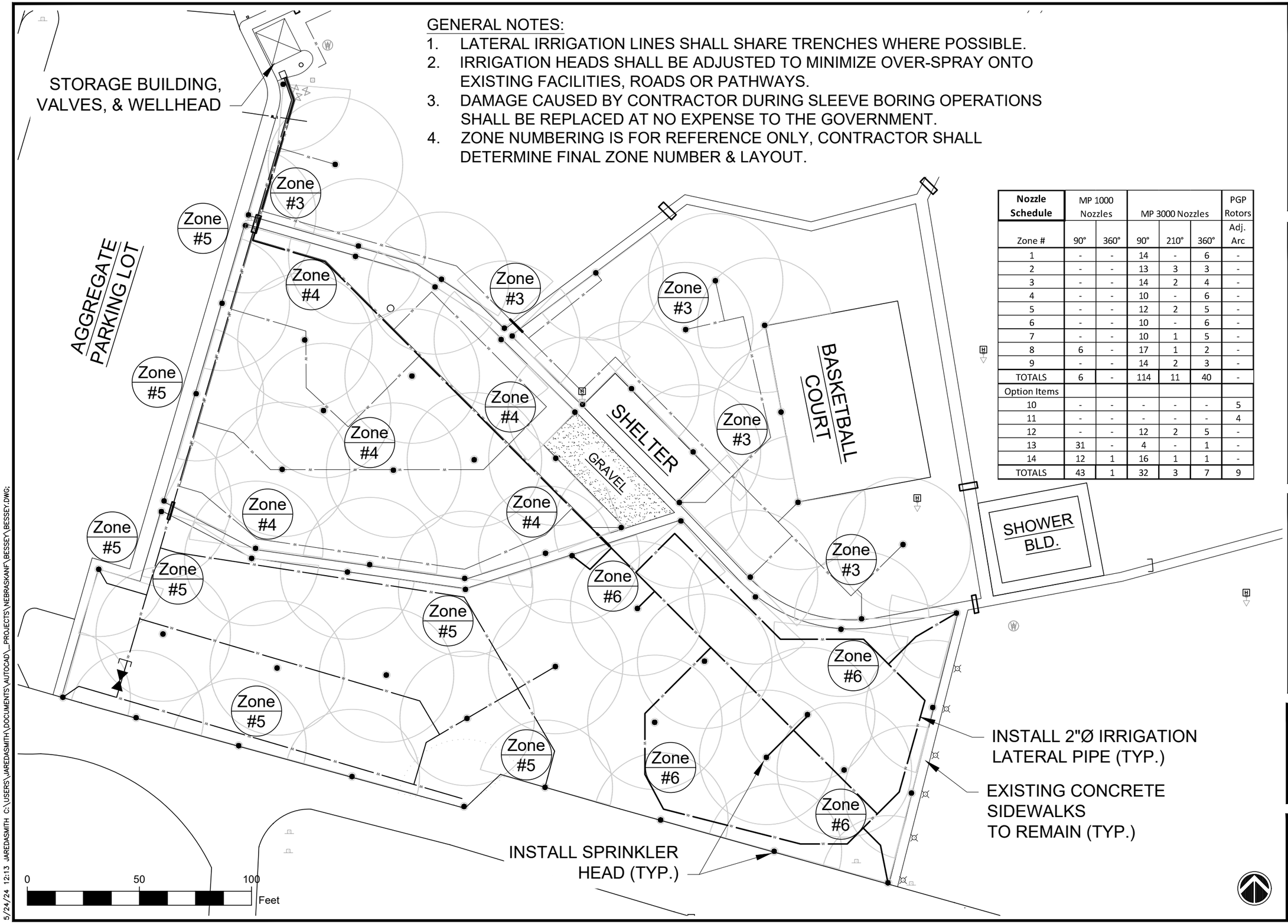


| Nozzle Schedule | MP 1000 Nozzles | | MP 3000 Nozzles | | | PGP Rotors |
|---|---|---|---|---|---|---|
| Zone # | 90° | 360° | 90° | 210° | 360° | Adj. Arc |
| 1 | - | - | 14 | - | 6 | - |
| 2 | - | - | 13 | 3 | 3 | - |
| 3 | - | - | 14 | 2 | 4 | - |
| 4 | - | - | 10 | - | 6 | - |
| 5 | - | - | 12 | 2 | 5 | - |
| 6 | - | - | 10 | - | 6 | - |
| 7 | - | - | 10 | 1 | 5 | - |
| 8 | 6 | - | 17 | 1 | 2 | - |
| 9 | - | - | 14 | 2 | 3 | - |
| TOTALS | 6 | - | 114 | 11 | 40 | - |
| Option Items | | | | | | |
| 10 | - | - | - | - | - | 5 |
| 11 | - | - | - | - | - | 4 |
| 12 | - | - | 12 | 2 | 5 | - |
| 13 | 31 | - | 4 | - | 1 | - |
| 14 | 12 | 1 | 16 | 1 | 1 | - |
| TOTALS | 43 | 1 | 32 | 3 | 7 | 9 |

UNITED STATES DEPARTMENT OF AGRICULTURE

FOREST SERVICE

**R2**

**ROCKY MOUNTAIN REGION**

STAMPS, LOGOS, AND SEALS

| NO. | REVISION / ISSUE | DATE |
|---|---|---|
| 3 | | |
| 2 | | |
| 1 | | |

PROJECT NAME

**BESSEY RECREATION SITE - IRRIGATION IMPROVEMENTS**

**NEBRASKA NATIONAL FOREST & GRASSLANDS**

**BESSEY RANGER DISTRICT**

DRAWING TITLE

IRRIGATION SITE PLAN - SOUTH ZONES #3 - 6

ARCHIVE NO.

DESIGNER J.SMITH

CHECKED

DATE 05/2024

SUB SHEET NO. L1.3

SHEET 11 OF 24

5/24/24 12:13 JAREDASMITH C:\USERS\JAREDASMITH\DOCUMENTS\AUTOCAD__PROJECTS\NEBRASKANF\BESSEY\BESSEY.DWG;

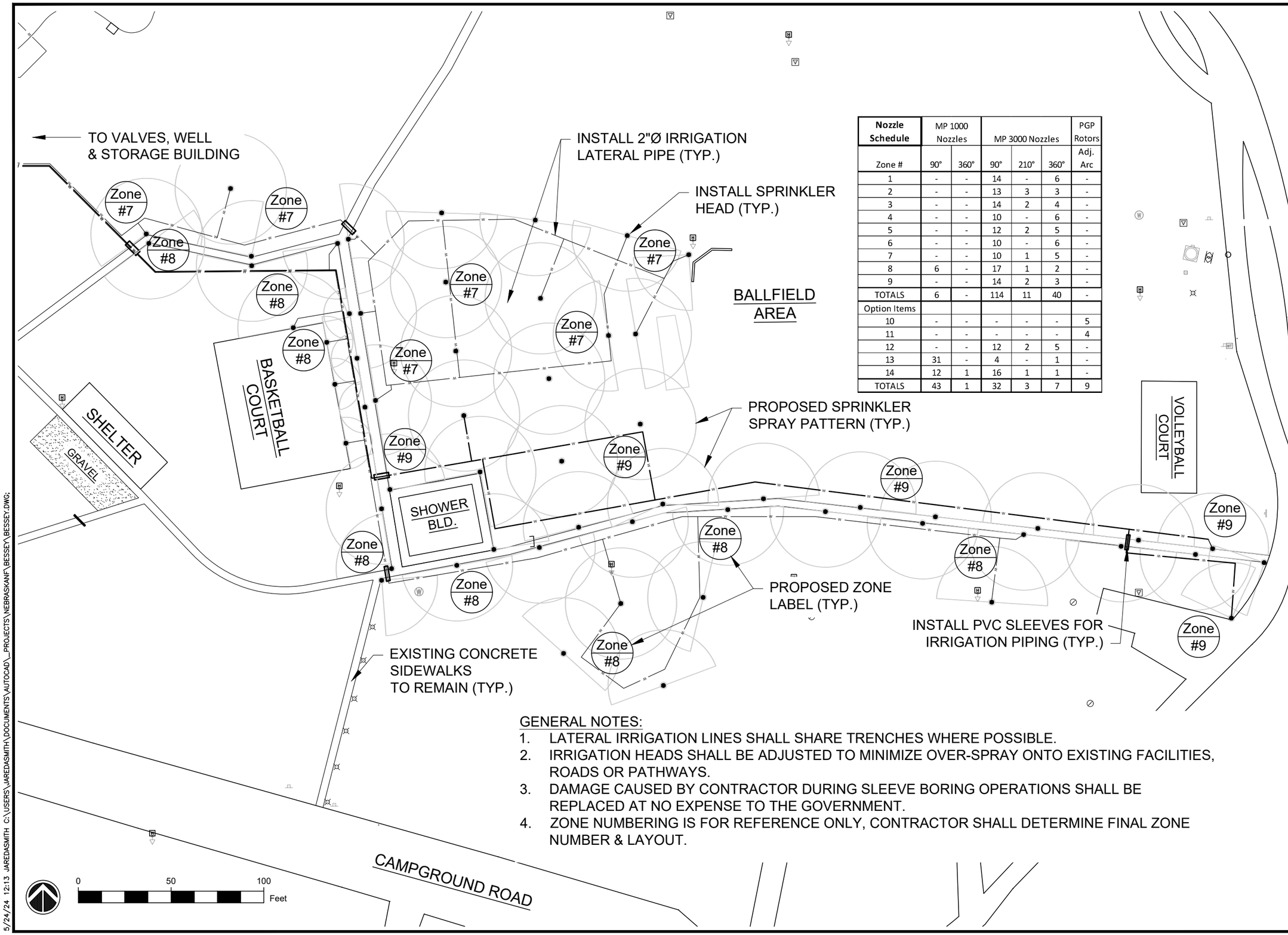


| Nozzle Schedule | MP 1000 Nozzles | | MP 3000 Nozzles | | | PGP Rotors |
|---|---|---|---|---|---|---|
| Zone # | 90° | 360° | 90° | 210° | 360° | Adj. Arc |
| 1 | - | - | 14 | - | 6 | - |
| 2 | - | - | 13 | 3 | 3 | - |
| 3 | - | - | 14 | 2 | 4 | - |
| 4 | - | - | 10 | - | 6 | - |
| 5 | - | - | 12 | 2 | 5 | - |
| 6 | - | - | 10 | - | 6 | - |
| 7 | - | - | 10 | 1 | 5 | - |
| 8 | 6 | - | 17 | 1 | 2 | - |
| 9 | - | - | 14 | 2 | 3 | - |
| TOTALS | 6 | - | 114 | 11 | 40 | - |
| Option Items | | | | | | |
| 10 | - | - | - | - | - | 5 |
| 11 | - | - | - | - | - | 4 |
| 12 | - | - | 12 | 2 | 5 | - |
| 13 | 31 | - | 4 | - | 1 | - |
| 14 | 12 | 1 | 16 | 1 | 1 | - |
| TOTALS | 43 | 1 | 32 | 3 | 7 | 9 |

GENERAL NOTES:

1. LATERAL IRRIGATION LINES SHALL SHARE TRENCHES WHERE POSSIBLE.
2. IRRIGATION HEADS SHALL BE ADJUSTED TO MINIMIZE OVER-SPRAY ONTO EXISTING FACILITIES, ROADS OR PATHWAYS.
3. DAMAGE CAUSED BY CONTRACTOR DURING SLEEVE BORING OPERATIONS SHALL BE REPLACED AT NO EXPENSE TO THE GOVERNMENT.
4. ZONE NUMBERING IS FOR REFERENCE ONLY, CONTRACTOR SHALL DETERMINE FINAL ZONE NUMBER & LAYOUT.

UNITED STATES DEPARTMENT OF AGRICULTURE

FOREST SERVICE

**R2**

**ROCKY MOUNTAIN REGION**

STAMPS, LOGOS, AND SEALS

| NO. | REVISION / ISSUE | DATE |
|---|---|---|
| 3 | | |
| 2 | | |
| 1 | | |

PROJECT NAME

**BESSEY RECREATION SITE - IRRIGATION IMPROVEMENTS**

**NEBRASKA NATIONAL FOREST & GRASSLANDS**

**BESSEY RANGER DISTRICT**

DRAWING TITLE

IRRIGATION SITE PLAN - CENTER ZONES #7 - 9

ARCHIVE NO.

DESIGNER J.SMITH

CHECKED

DATE 05/2024

SUB SHEET NO. L1.4

SHEET 12 OF 24

5/24/24 12:13 JAREDASMITH C:\USERS\JAREDASMITH\DOCUMENTS\AUTOCAD__PROJECTS\NEBRASKANF\BESSEY\BESSEY.DWG;

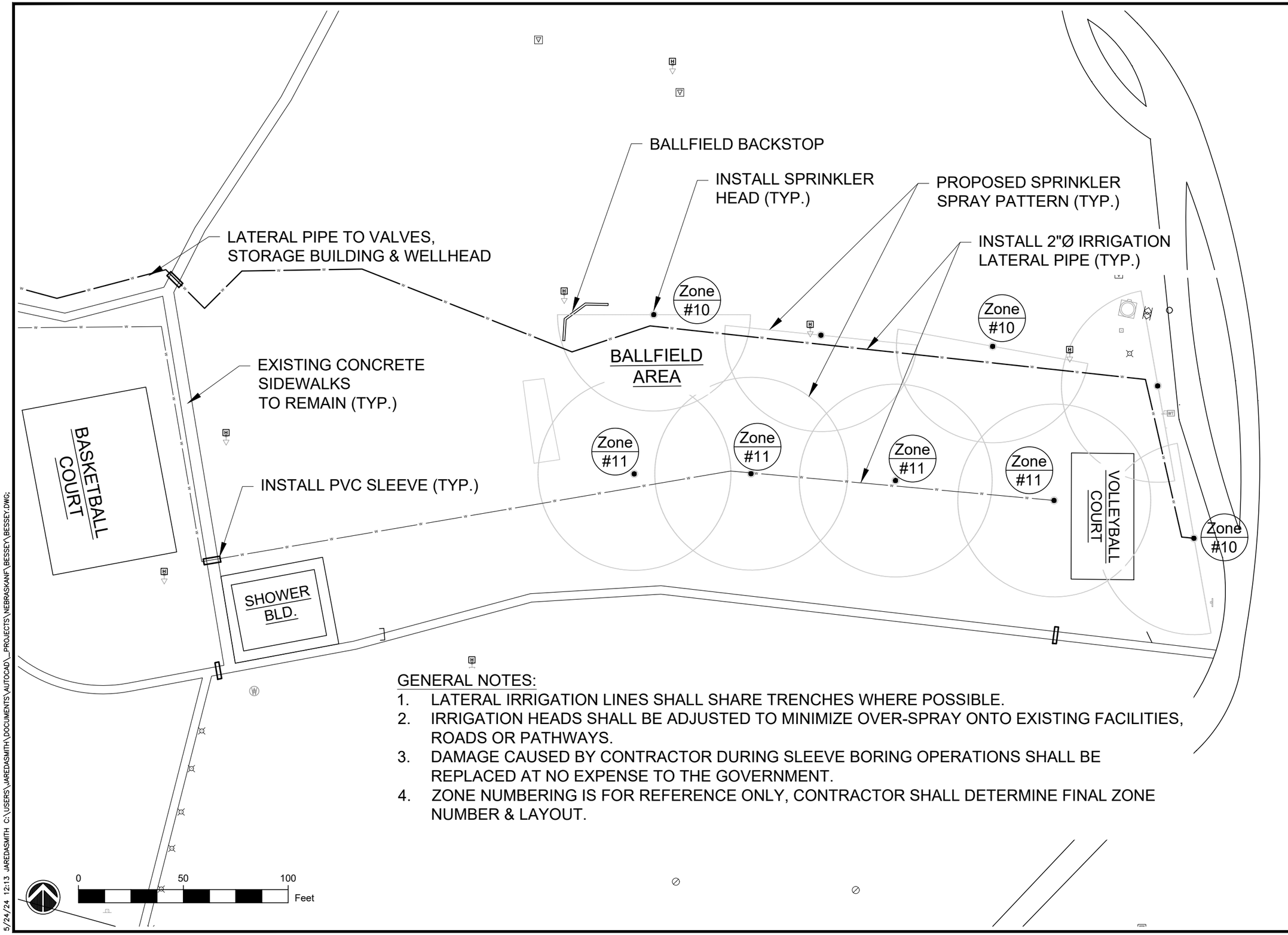


GENERAL NOTES:

1. LATERAL IRRIGATION LINES SHALL SHARE TRENCHES WHERE POSSIBLE.
2. IRRIGATION HEADS SHALL BE ADJUSTED TO MINIMIZE OVER-SPRAY ONTO EXISTING FACILITIES, ROADS OR PATHWAYS.
3. DAMAGE CAUSED BY CONTRACTOR DURING SLEEVE BORING OPERATIONS SHALL BE REPLACED AT NO EXPENSE TO THE GOVERNMENT.
4. ZONE NUMBERING IS FOR REFERENCE ONLY, CONTRACTOR SHALL DETERMINE FINAL ZONE NUMBER & LAYOUT.

UNITED STATES DEPARTMENT OF AGRICULTURE

FOREST SERVICE

**R2**

**ROCKY MOUNTAIN REGION**

STAMPS, LOGOS, AND SEALS

| NO. | REVISION / ISSUE | DATE |
|---|---|---|
| 3 | | |
| 2 | | |
| 1 | | |

PROJECT NAME

**BESSEY RECREATION SITE - IRRIGATION IMPROVEMENTS**

**NEBRASKA NATIONAL FOREST & GRASSLANDS**

**BESSEY RANGER DISTRICT**

DRAWING TITLE

IRRIGATION SITE PLAN - EAST ZONES #10-11 (OPTION BID ITEM)

ARCHIVE NO.

DESIGNER J.SMITH

CHECKED

SUB SHEET NO. L1.5

DATE 05/2024

SHEET 13 OF 24

5/24/24 12:13 JAREDASMITH C:\USERS\JAREDASMITH\DOCUMENTS\AUTOCAD__PROJECTS\NEBRASKANF\BESSEY\BESSEY.DWG;

| Nozzle Schedule | MP 1000 Nozzles | | MP 3000 Nozzles | | | PGP Rotors |
|---|---|---|---|---|---|---|
| Zone # | 90° | 360° | 90° | 210° | 360° | Adj. Arc |
| 1 | - | - | 14 | - | 6 | - |
| 2 | - | - | 13 | 3 | 3 | - |
| 3 | - | - | 14 | 2 | 4 | - |
| 4 | - | - | 10 | - | 6 | - |
| 5 | - | - | 12 | 2 | 5 | - |
| 6 | - | - | 10 | - | 6 | - |
| 7 | - | - | 10 | 1 | 5 | - |
| 8 | 6 | - | 17 | 1 | 2 | - |
| 9 | - | - | 14 | 2 | 3 | - |
| TOTALS | 6 | - | 114 | 11 | 40 | - |
| Option Items | | | | | | |
| 10 | - | - | - | - | - | 5 |
| 11 | - | - | - | - | - | 4 |
| 12 | - | - | 12 | 2 | 5 | - |
| 13 | 31 | - | 4 | - | 1 | - |
| 14 | 12 | 1 | 16 | 1 | 1 | - |
| TOTALS | 43 | 1 | 32 | 3 | 7 | 9 |

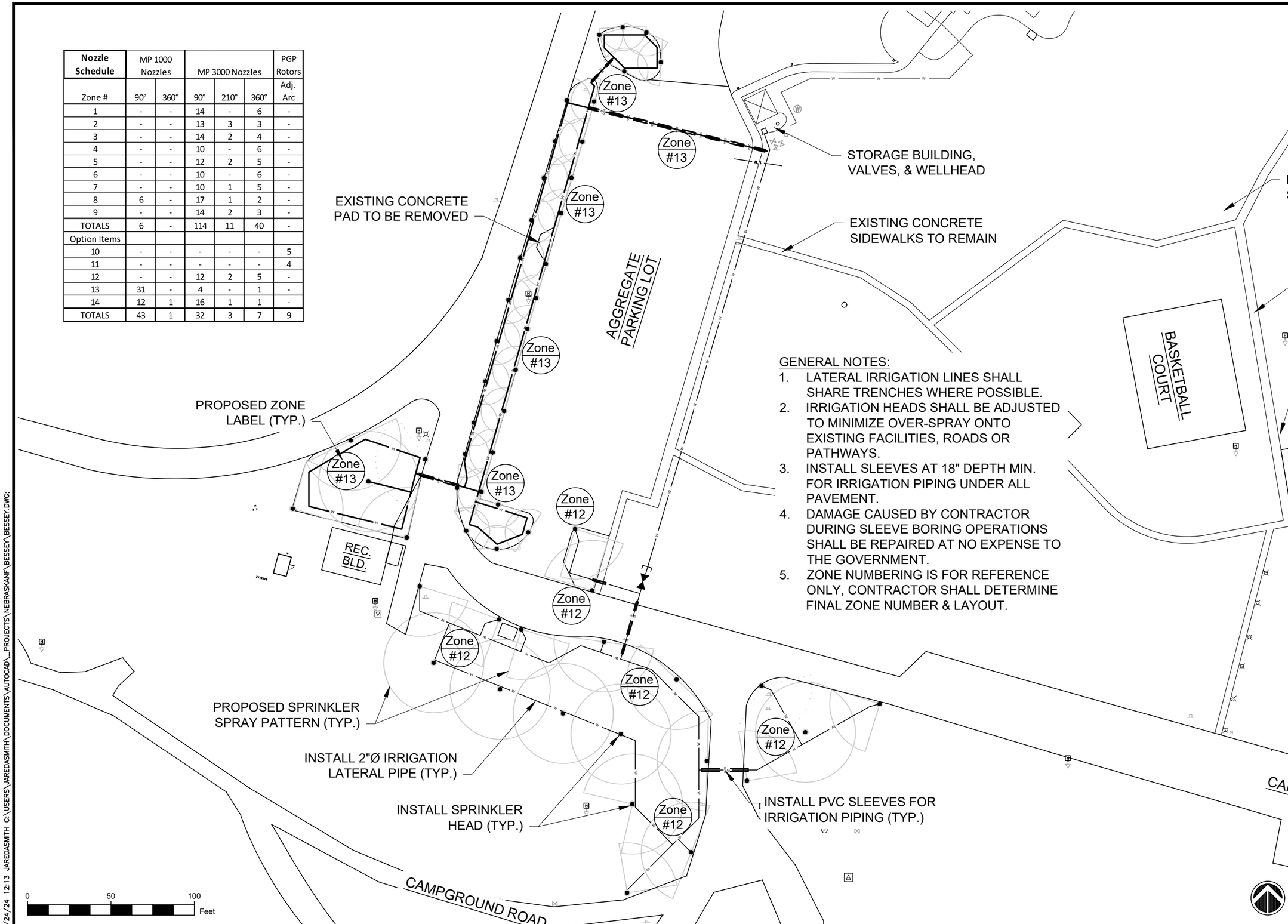


GENERAL NOTES:

1. LATERAL IRRIGATION LINES SHALL SHARE TRENCHES WHERE POSSIBLE.
2. IRRIGATION HEADS SHALL BE ADJUSTED TO MINIMIZE OVER-SPRAY ONTO EXISTING FACILITIES, ROADS OR PATHWAYS.
3. INSTALL SLEEVES AT 18" DEPTH MIN. FOR IRRIGATION PIPING UNDER ALL PAVEMENT.
4. DAMAGE CAUSED BY CONTRACTOR DURING SLEEVE BORING OPERATIONS SHALL BE REPAIRED AT NO EXPENSE TO THE GOVERNMENT.
5. ZONE NUMBERING IS FOR REFERENCE ONLY, CONTRACTOR SHALL DETERMINE FINAL ZONE NUMBER & LAYOUT.

UNITED STATES DEPARTMENT OF AGRICULTURE

FOREST SERVICE

**R2**

**ROCKY MOUNTAIN REGION**

STAMPS, LOGOS, AND SEALS

| NO. | REVISION / ISSUE | DATE |
|---|---|---|
| 3 | | |
| 2 | | |
| 1 | | |

PROJECT NAME

**BESSEY RECREATION SITE - IRRIGATION IMPROVEMENTS**

**NEBRASKA NATIONAL FOREST & GRASSLANDS**

**BESSEY RANGER DISTRICT**

DRAWING TITLE

IRRIGATION SITE PLAN - SOUTH-WEST ZONES #12 & 13 (OPTION BID ITEM)

ARCHIVE NO.

DESIGNER J.SMITH

CHECKED

DATE 05/2024

SUB SHEET NO. L1.6

SHEET 14 OF 24

5/24/24 12:13 JAREDASMITH C:\USERS\JAREDASMITH\DOCUMENTS\AUTOCAD__PROJECTS\NEBRASKANF\BESSEY\BESSEY.DWG;

GENERAL NOTES:

1. LATERAL IRRIGATION LINES SHALL SHARE TRENCHES WHERE POSSIBLE.
2. IRRIGATION HEADS SHALL BE ADJUSTED TO MINIMIZE OVER-SPRAY ONTO EXISTING FACILITIES, ROADS OR PATHWAYS.
3. INSTALL SLEEVES AT 18" DEPTH MIN. FOR IRRIGATION PIPING UNDER ALL PAVEMENT.
4. DAMAGE CAUSED BY CONTRACTOR DURING SLEEVE BORING OPERATIONS SHALL BE REPAIRED AT NO EXPENSE TO THE GOVERNMENT.
5. ZONE NUMBERING IS FOR REFERENCE ONLY, CONTRACTOR SHALL DETERMINE FINAL ZONE NUMBER & LAYOUT.

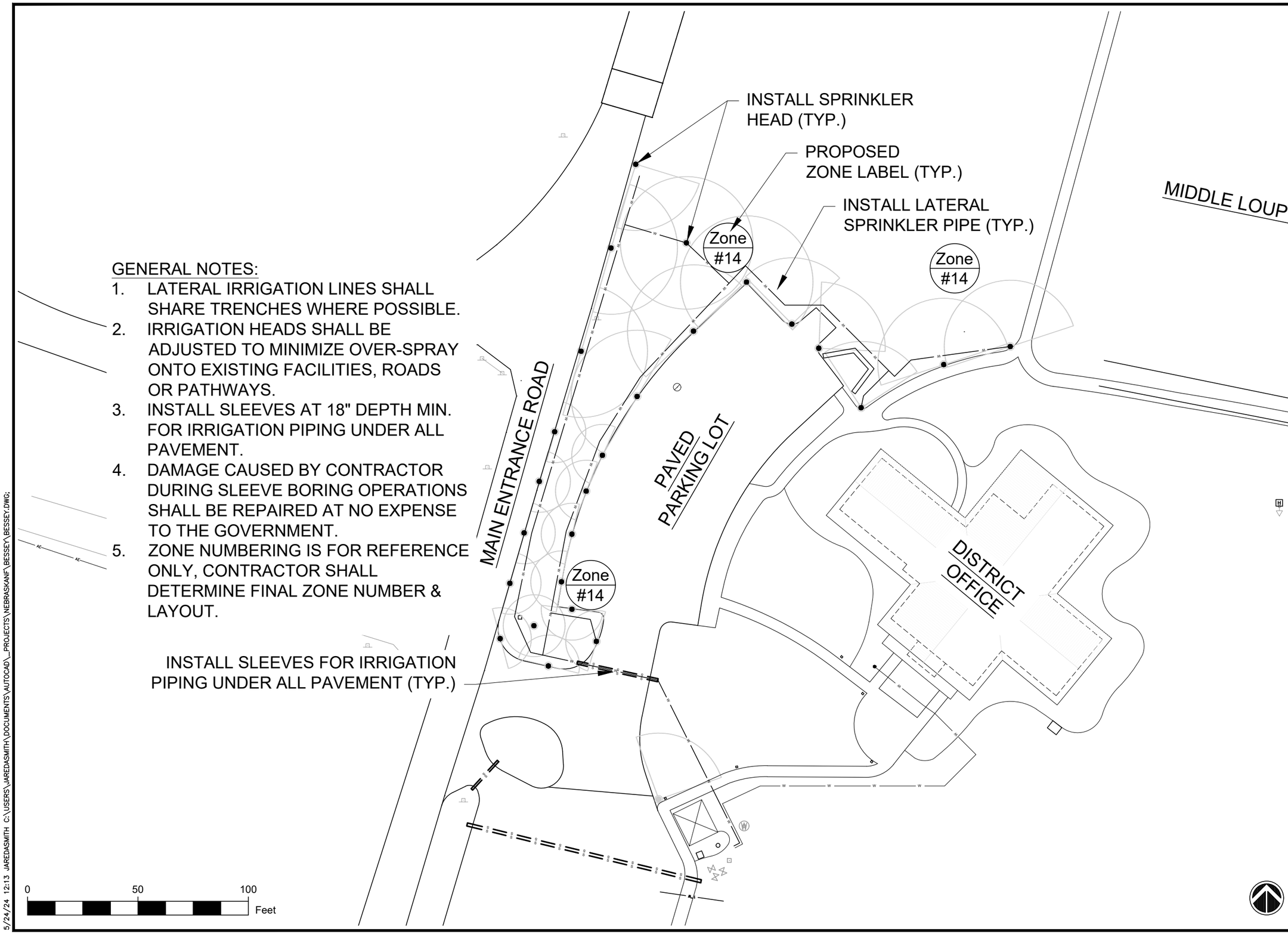


UNITED STATES DEPARTMENT OF AGRICULTURE

FOREST SERVICE

**R2**

**ROCKY MOUNTAIN REGION**

STAMPS, LOGOS, AND SEALS

| NO. | REVISION / ISSUE | DATE |
|---|---|---|
| 3 | | |
| 2 | | |
| 1 | | |

PROJECT NAME

**BESSEY RECREATION SITE - IRRIGATION IMPROVEMENTS**

**NEBRASKA NATIONAL FOREST & GRASSLANDS**

**BESSEY RANGER DISTRICT**

DRAWING TITLE

IRRIGATION SITE PLAN - NORTH-WEST ZONE #14 (OPTION BID ITEM)

ARCHIVE NO.

DESIGNER J.SMITH

CHECKED

DATE 05/2024

SUB SHEET NO. L1.7

SHEET 15 OF 24

5/24/24 12:13 JAREDASMITH C:\USERS\JAREDASMITH\DOCUMENTS\AUTOCAD__PROJECTS\NEBRASKANF\BESSEY\BESSEY.DWG;

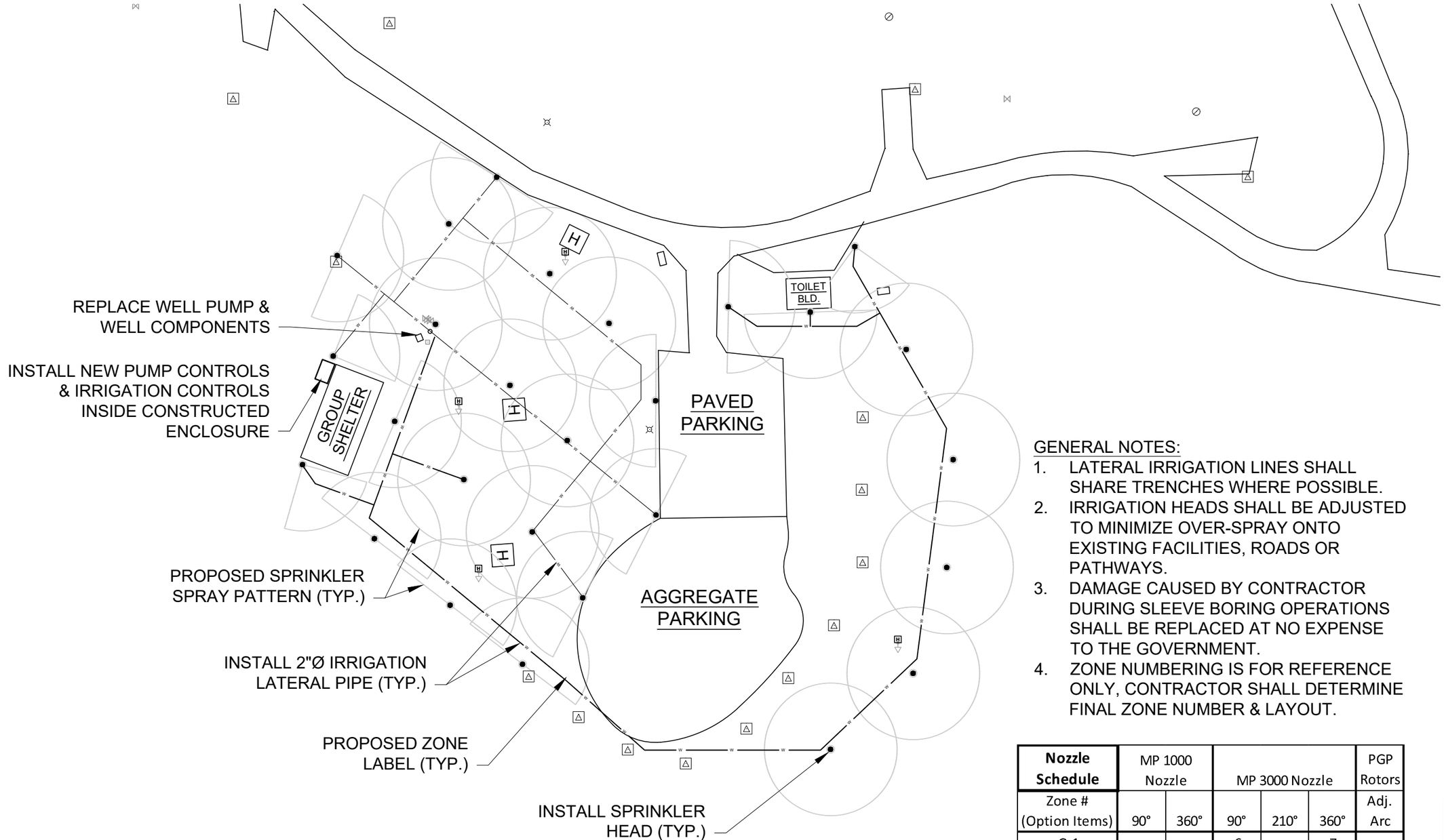


GENERAL NOTES:

1. LATERAL IRRIGATION LINES SHALL SHARE TRENCHES WHERE POSSIBLE.
2. IRRIGATION HEADS SHALL BE ADJUSTED TO MINIMIZE OVER-SPRAY ONTO EXISTING FACILITIES, ROADS OR PATHWAYS.
3. DAMAGE CAUSED BY CONTRACTOR DURING SLEEVE BORING OPERATIONS SHALL BE REPLACED AT NO EXPENSE TO THE GOVERNMENT.
4. ZONE NUMBERING IS FOR REFERENCE ONLY, CONTRACTOR SHALL DETERMINE FINAL ZONE NUMBER & LAYOUT.

| Nozzle Schedule | MP 1000 Nozzle | | MP 3000 Nozzle | | | PGP Rotors |
|---|---|---|---|---|---|---|
| Zone # (Option Items) | 90° | 360° | 90° | 210° | 360° | Adj. Arc |
| G-1 | - | - | 6 | - | 7 | - |
| G-2 | - | - | 8 | - | 6 | - |
| TOTALS | - | - | 14 | - | 13 | - |

0 50 100 Feet

UNITED STATES DEPARTMENT OF AGRICULTURE

FOREST SERVICE

**R2**

**ROCKY MOUNTAIN REGION**

STAMPS, LOGOS, AND SEALS

| NO. | REVISION / ISSUE | DATE |
|---|---|---|
| 3 | | |
| 2 | | |
| 1 | | |

PROJECT NAME

**BESSEY RECREATION SITE - IRRIGATION IMPROVEMENTS**

**NEBRASKA NATIONAL FOREST & GRASSLANDS**

**BESSEY RANGER DISTRICT**

DRAWING TITLE

IRRIGATION SITE PLAN - GROUP SITE (OPTION BID ITEM)

ARCHIVE NO.

DESIGNER J.SMITH

CHECKED

DATE 05/2024

SUB SHEET NO. L1.8

SHEET 16 OF 24

5/24/24 12:13 JAREDASMITH C:\USERS\JAREDASMITH\DOCUMENTS\AUTOCAD_PROJECTS\NEBRASKANF\BESSEY\BESSEY.DWG;

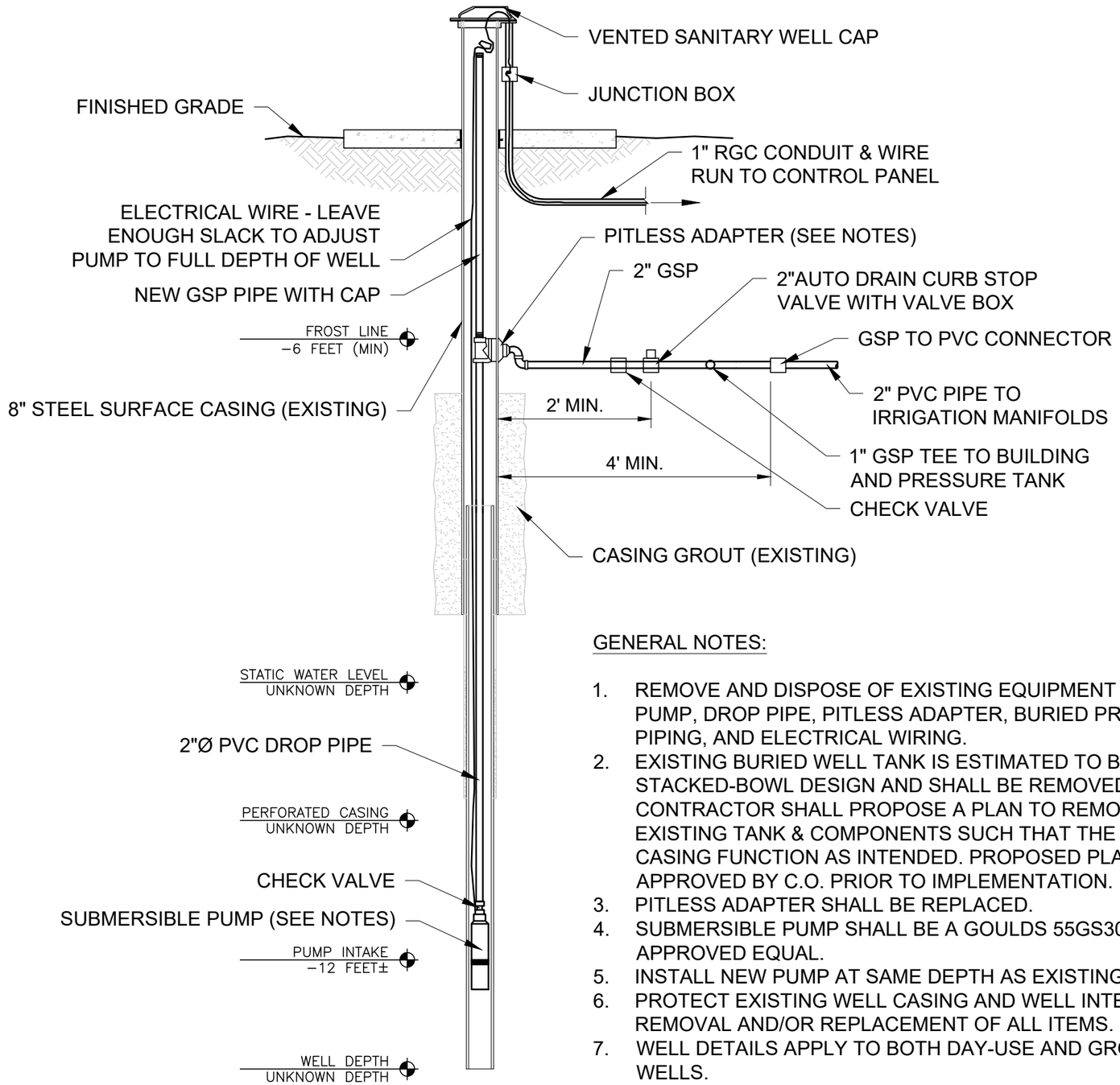


A
L2.0

TYPICAL WELL HEAD DETAIL

NO SCALE

GENERAL NOTES:

1. REMOVE AND DISPOSE OF EXISTING EQUIPMENT INCLUDING PUMP, DROP PIPE, PITLESS ADAPTER, BURIED PRESSURE TANK, PIPING, AND ELECTRICAL WIRING.
2. EXISTING BURIED WELL TANK IS ESTIMATED TO BE A STACKED-BOWL DESIGN AND SHALL BE REMOVED. CONTRACTOR SHALL PROPOSE A PLAN TO REMOVE THE EXISTING TANK & COMPONENTS SUCH THAT THE WELL & CASING FUNCTION AS INTENDED. PROPOSED PLAN SHALL BE APPROVED BY C.O. PRIOR TO IMPLEMENTATION.
3. PITLESS ADAPTER SHALL BE REPLACED.
4. SUBMERSIBLE PUMP SHALL BE A GOULDS 55GS30 OR APPROVED EQUAL.
5. INSTALL NEW PUMP AT SAME DEPTH AS EXISTING.
6. PROTECT EXISTING WELL CASING AND WELL INTEGRITY DURING REMOVAL AND/OR REPLACEMENT OF ALL ITEMS.
7. WELL DETAILS APPLY TO BOTH DAY-USE AND GROUP SITE WELLS.

UNITED STATES
DEPARTMENT OF AGRICULTURE

FOREST SERVICE

**R2**

**ROCKY MOUNTAIN REGION**

STAMPS, LOGOS, AND SEALS

| NO. | REVISION / ISSUE | DATE |
|---|---|---|
| 3 | | |
| 2 | | |
| 1 | | |

PROJECT NAME

**BESSEY RECREATION SITE - IRRIGATION IMPROVEMENTS**

**NEBRASKA NATIONAL FOREST & GRASSLANDS**

**BESSEY RANGER DISTRICT**

DRAWING TITLE

TYPICAL WELL DETAILS

ARCHIVE NO.

DESIGNER J.SMITH

CHECKED

SUB SHEET NO. L2.0

DATE 05/2024

SHEET 17 OF 24

5/28/24 08:40 JAREDASMITH C:\USERS\JAREDASMITH\DOCUMENTS\AUTOCAD_PROJECTS\NEBRASKANF\BESSEY\TYP-WELL.DWG;

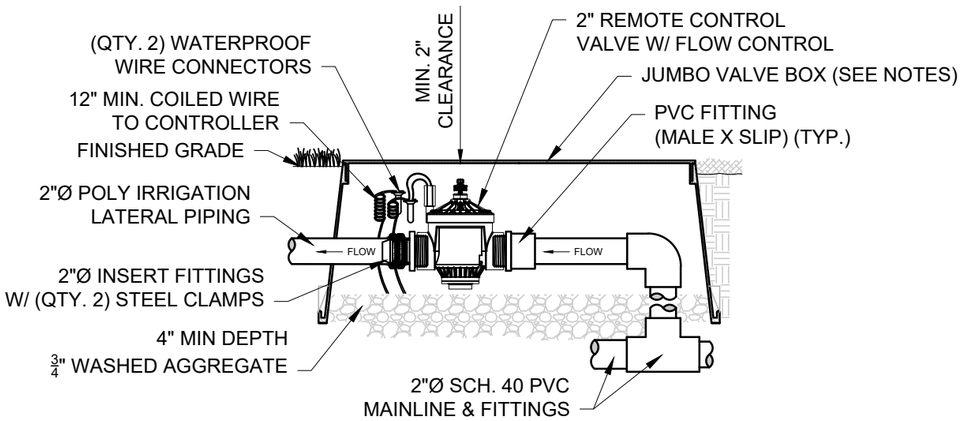


A L2.1 TYPICAL ZONE VALVE ASSEMBLY
NO SCALE

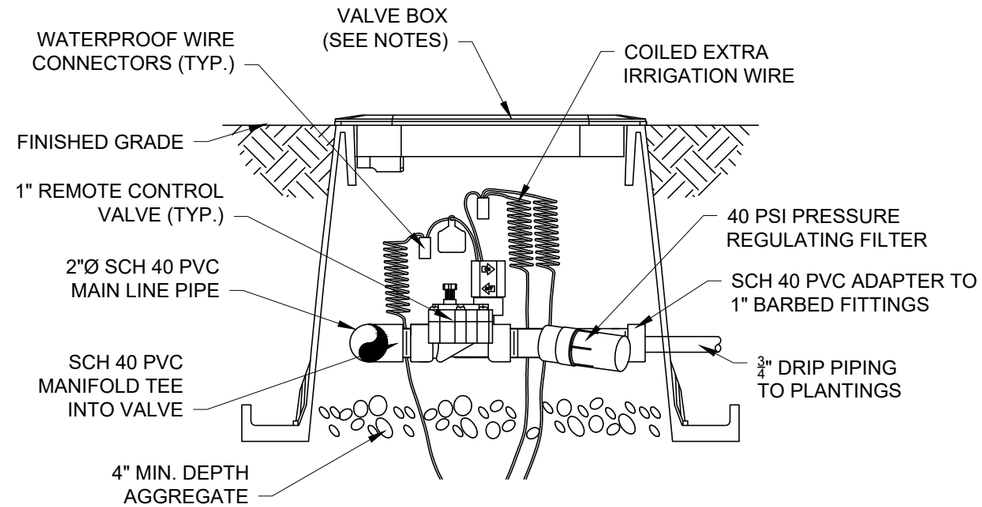


B L2.1 TYPICAL DRIP ZONE VALVE ASSEMBLY
NO SCALE

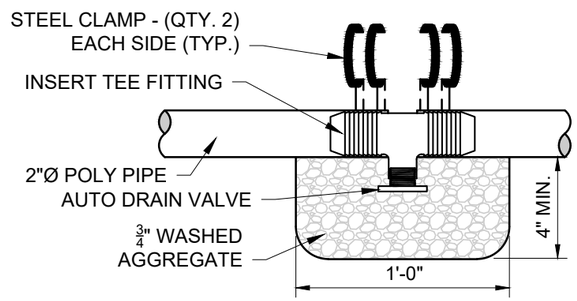


D L2.1 TYPICAL AUTO DRAIN VALVE DETAIL
NO SCALE

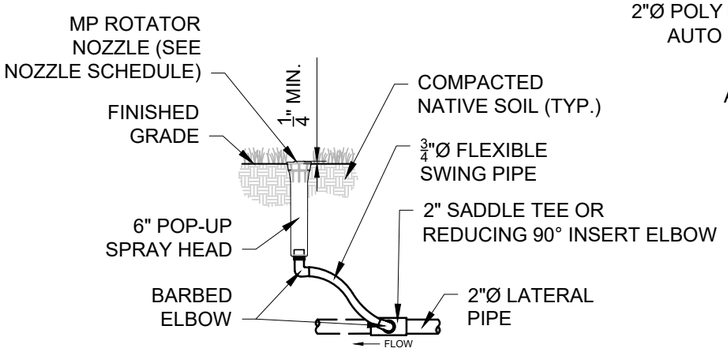


C L2.1 TYPICAL POP-UP INSTALLATION
NO SCALE

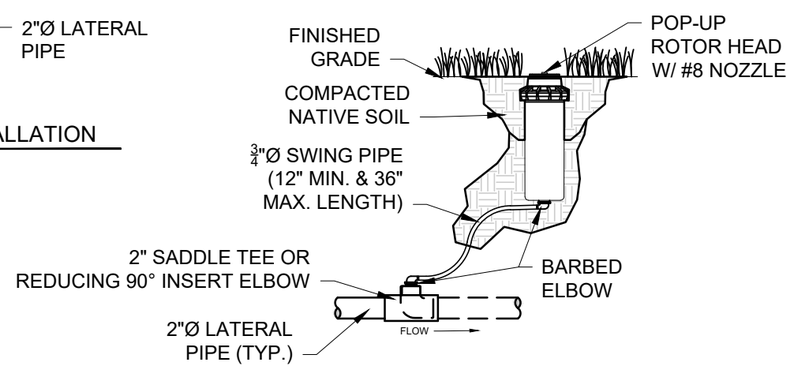


E L2.1 TYPICAL ROTOR HEAD DETAIL
NO SCALE

GENERAL NOTES:

1. ALL MAINLINE IRRIGATION PIPE AND ALL FITTINGS SHALL BE 2" SCH 40 PVC.
2. ALL OVERHEAD SPRAY ZONE OR LATERAL PIPING SHALL BE 2"Ø POLYETHYLENE "POLY" PIPE DESIGNED SPECIFICALLY FOR IRRIGATION SYSTEMS.
3. FITTINGS SHALL BE BARBED INSERT FITTINGS SECURED WITH (QTY. 2) "CRIMP-STYLE" CLAMPS ON EACH SIDE OR EACH CONNECTION.
4. ALL DRIP IRRIGATION PIPE SHALL BE 3/4"Ø POLYETHYLENE TUBING DESIGNED SPECIFICALLY FOR DRIP IRRIGATION.
5. CONTRACTOR MAY RECOMMEND AND SUBMIT IMPROVED IRRIGATION SOLUTIONS TO THE C.O. FOR APPROVAL, ESPECIALLY WHEN THE SUGGESTED CHANGES REDUCE COSTS, REDUCE LABOR, REDUCE ANNUAL MAINTENANCE, OR REDUCE INSTALLATION TIME.
6. IRRIGATION REMOTE CONTROL VALVE SHALL BE "HUNTER 2" PGV" OR APPROVED EQUAL AND INSTALLED PER MANUFACTURER'S INSTRUCTIONS.
7. REMOTE CONTROL VALVE & PRESSURE REGULATOR/FILTER FOR DRIP ZONE SHALL BE "RAINBIRD'S 1" WIDE FLOW CONTROL ZONE KIT W/ IVM" OR APPROVED EQUAL AND INSTALLED PER MANUFACTURER'S INSTRUCTIONS.
8. JUMBO VALVE BOX SHALL BE "RAINBIRD'S JUMBO VALVE BOX - VMJMB" OR APPROVE EQUAL.
9. POP-UP SPRAY BODY HEAD SHALL BE "HUNTER'S PRO-SPRAY PRS40" WITH "HUNTER'S MP ROTATOR NOZZLES" OR APPROVED EQUAL.
10. POP-UP ROTOR HEADS SHALL BE "HUNTER'S PGP" WITH #8 RED NOZZLES OR APPROVED EQUAL.
11. DRIP TUBING AND DRIP EMITTERS SHALL BE INSTALLED PER MANUFACTURER'S INSTRUCTIONS.
12. AUTO DRAIN VALVES SHALL BE INSTALLED AT ALL LOW POINTS AND NO MORE THAN 100 FEET APART. AUTO DRAIN'S SHALL ALLOW WATER TO FREELY DRAIN FROM THE IRRIGATION PIPING WHEN PRESSURES FALL BELOW 5 TO 10 PSI. CONTRACTOR SHALL SUBMIT SAMPLE TO C.O. FOR APPROVAL PRIOR TO INSTALLATION.

UNITED STATES DEPARTMENT OF AGRICULTURE
FOREST SERVICE
R2
ROCKY MOUNTAIN REGION

STAMPS, LOGOS, AND SEALS

| NO. | REVISION / ISSUE | DATE |
|---|---|---|
| 3 | | |
| 2 | | |
| 1 | | |

PROJECT NAME
BESSEY RECREATION SITE - IRRIGATION IMPROVEMENTS
NEBRASKA NATIONAL FOREST & GRASSLANDS
BESSEY RANGER DISTRICT

DRAWING TITLE
TYPICAL VALVE & SPRINKLER HEAD DETAILS

ARCHIVE NO.
DESIGNER J.SMITH
CHECKED
SUB SHEET NO. L2.1
DATE 05/2024
SHEET 18 OF 24

5/28/24 08:43 JAREDASMITH C:\USERS\JAREDASMITH\DOCUMENTS\AUTOCAD_PROJECTS\NEBRASKANF\BESSEY\TYP_IRRIGATION_BESSEY.DWG;

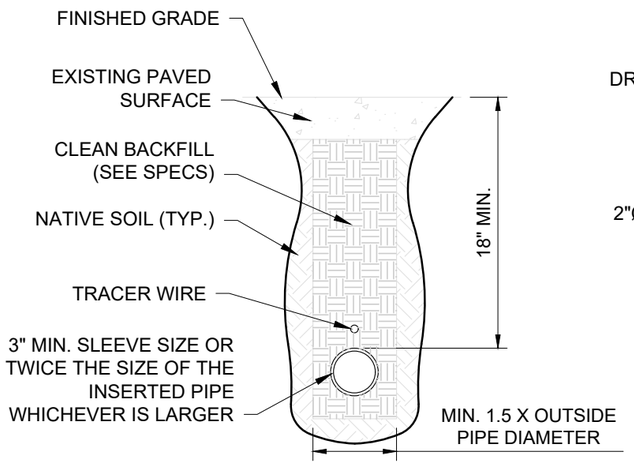


A / L2.2 TYPICAL IRRIGATION SLEEVING SECTION
NO SCALE

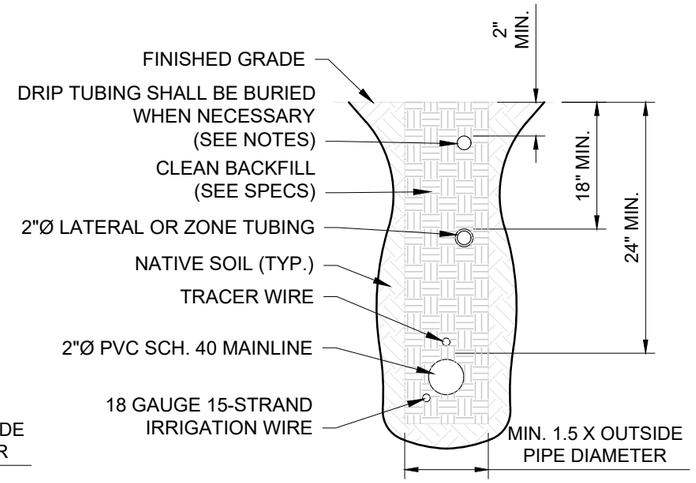


B / L2.2 TYPICAL IRRIGATION TRENCHING SECTION
NO SCALE

GENERAL NOTES:

1. **CONTRACTOR SHALL CALL FOR AND OBTAIN ALL UTILITY LOCATES PRIOR TO TRENCHING OR DIGGING ACTIVITIES (NEBRASKA 811).**
2. ALL MAINLINE IRRIGATION PIPE AND FITTINGS SHALL BE 2" SCH 40 PVC.
3. SLEEVES SHALL BE INSTALLED WHEN BURIED IRRIGATION PIPING GOES UNDER ANY PAVED SURFACE OR AGGREGATE PARKING AREA.
4. CONCRETE SIDEWALK AND WALLS SHALL BE PROTECTED DURING IRRIGATION SLEEVE OPERATIONS. ANY DAMAGE AS A RESULT OF SLEEVING SHALL BE REPLACED BY THE CONTRACTOR AND AT NO EXPENSE TO THE GOVERNMENT.
5. ALL IRRIGATION LATERAL PIPING SHALL BE 2"Ø POLYETHYLENE OR "POLY" DESIGNED SPECIFICALLY FOR IRRIGATION SYSTEMS.
6. CONTRACTOR MAY RECOMMEND AND SUBMIT BETTER IRRIGATION SOLUTIONS TO THE C.O. FOR APPROVAL, ESPECIALLY WHEN THE SUGGESTED CHANGES REDUCE COSTS OR REDUCE LABOR.

Nebraska 811
SAFETY IS IN YOUR HANDS.
EVERY DIG. EVERY TIME.

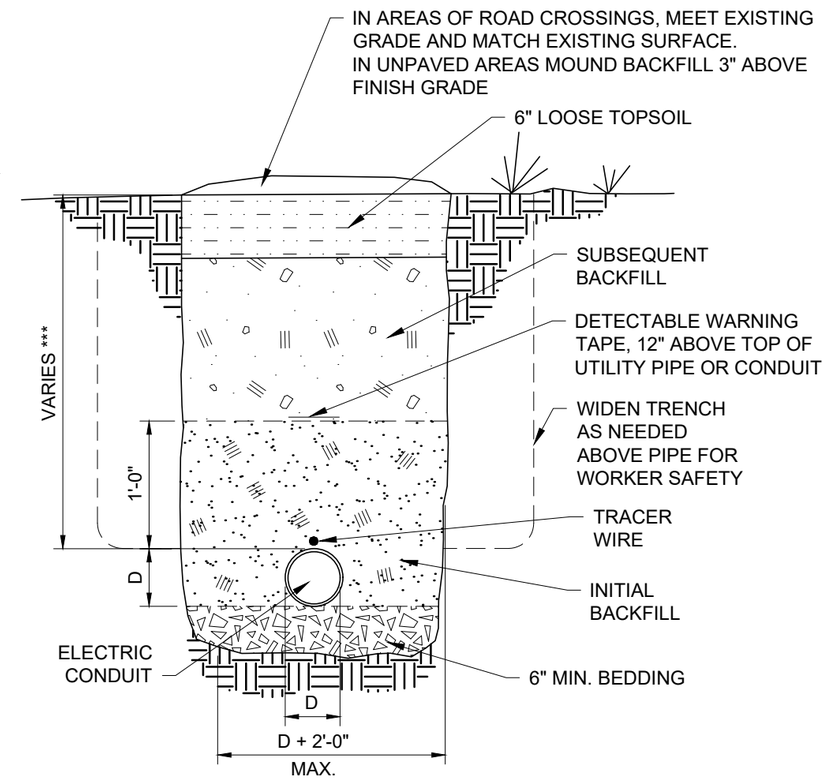


C / L2.2 ELECTRIC UTILITY TRENCHING DETAIL
NO SCALE

UNITED STATES DEPARTMENT OF AGRICULTURE
FOREST SERVICE
**R2**
**ROCKY MOUNTAIN REGION**

STAMPS, LOGOS, AND SEALS

| NO. | REVISION / ISSUE | DATE |
|---|---|---|
| 3 | | |
| 2 | | |
| 1 | | |

PROJECT NAME
**BESSEY RECREATION SITE - IRRIGATION IMPROVEMENTS**
**NEBRASKA NATIONAL FOREST & GRASSLANDS**
BESSEY RANGER DISTRICT

DRAWING TITLE
TYPICAL TRENCHING DETAILS

ARCHIVE NO.
DESIGNER J.SMITH
CHECKED
SUB SHEET NO. L2.2
DATE 05/2024
SHEET 19 OF 24

5/28/24 09:10 JAREDASMITH C:\USERS\JAREDASMITH\DOCUMENTS\AUTOCAD_PROJECTS\NEBRASKANF\BESSEY\TYP_IRRIGATION_BESSEY.DWG;

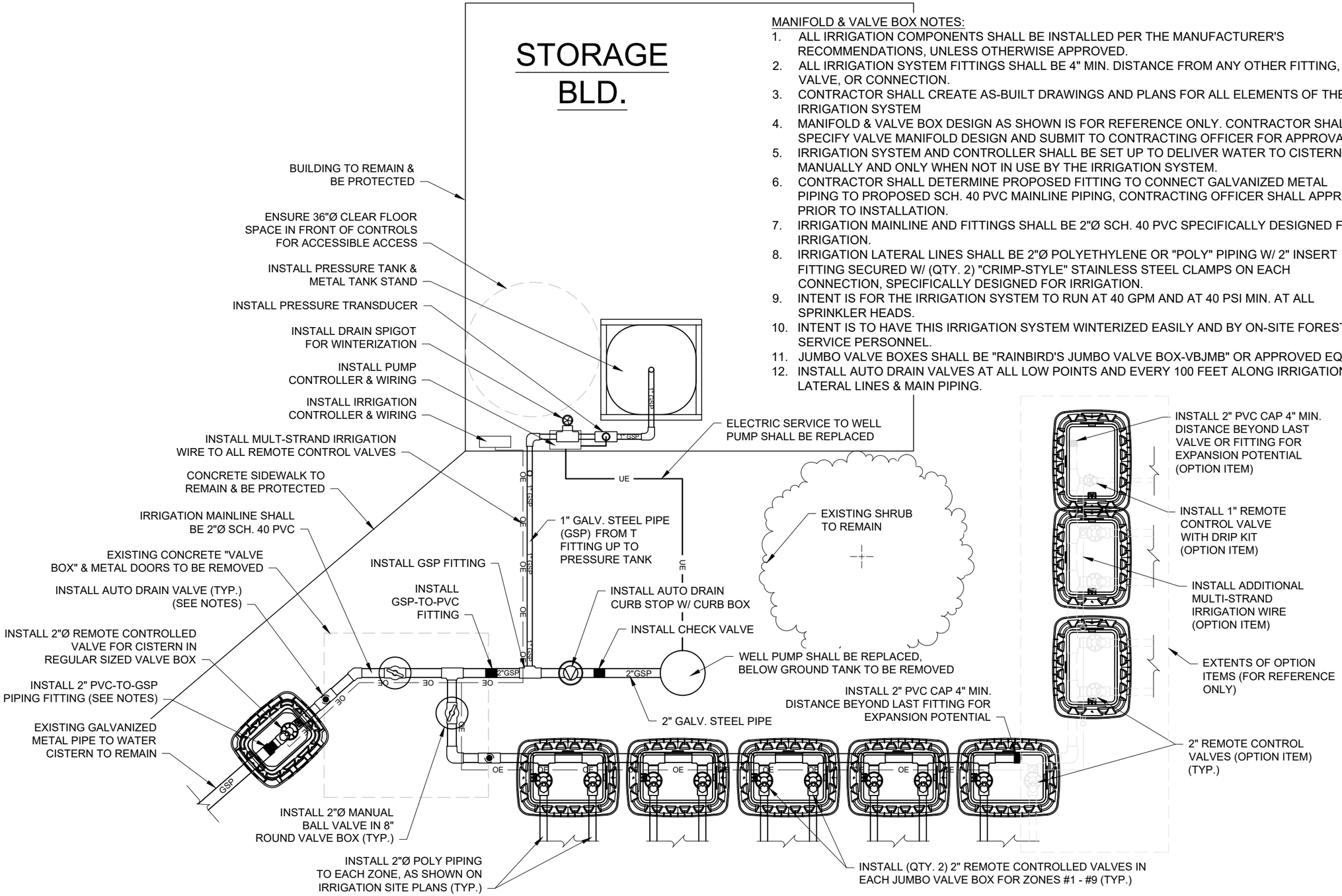


MANIFOLD & VALVE BOX NOTES:

1. ALL IRRIGATION COMPONENTS SHALL BE INSTALLED PER THE MANUFACTURER'S RECOMMENDATIONS, UNLESS OTHERWISE APPROVED.
2. ALL IRRIGATION SYSTEM FITTINGS SHALL BE 4" MIN. DISTANCE FROM ANY OTHER FITTING, VALVE, OR CONNECTION.
3. CONTRACTOR SHALL CREATE AS-BUILT DRAWINGS AND PLANS FOR ALL ELEMENTS OF THE IRRIGATION SYSTEM
4. MANIFOLD & VALVE BOX DESIGN AS SHOWN IS FOR REFERENCE ONLY. CONTRACTOR SHALL SPECIFY VALVE MANIFOLD DESIGN AND SUBMIT TO CONTRACTING OFFICER FOR APPROVAL.
5. IRRIGATION SYSTEM AND CONTROLLER SHALL BE SET UP TO DELIVER WATER TO CISTERN MANUALLY AND ONLY WHEN NOT IN USE BY THE IRRIGATION SYSTEM.
6. CONTRACTOR SHALL DETERMINE PROPOSED FITTING TO CONNECT GALVANIZED METAL PIPING TO PROPOSED SCH. 40 PVC MAINLINE PIPING, CONTRACTING OFFICER SHALL APPROVE PRIOR TO INSTALLATION.
7. IRRIGATION MAINLINE AND FITTINGS SHALL BE 2"Ø SCH. 40 PVC SPECIFICALLY DESIGNED FOR IRRIGATION.
8. IRRIGATION LATERAL LINES SHALL BE 2"Ø POLYETHYLENE OR "POLY" PIPING W/ 2" INSERT FITTING SECURED W/ (QTY. 2) "CRIMP-STYLE" STAINLESS STEEL CLAMPS ON EACH CONNECTION, SPECIFICALLY DESIGNED FOR IRRIGATION.
9. INTENT IS FOR THE IRRIGATION SYSTEM TO RUN AT 40 GPM AND AT 40 PSI MIN. AT ALL SPRINKLER HEADS.
10. INTENT IS TO HAVE THIS IRRIGATION SYSTEM WINTERIZED EASILY AND BY ON-SITE FOREST SERVICE PERSONNEL.
11. JUMBO VALVE BOXES SHALL BE "RAINBIRD'S JUMBO VALVE BOX-VBJMB" OR APPROVED EQUAL.
12. INSTALL AUTO DRAIN VALVES AT ALL LOW POINTS AND EVERY 100 FEET ALONG IRRIGATION LATERAL LINES & MAIN PIPING.

A / L2.3 MANIFOLD & VALVE BOX - DAY-USE

NO SCALE

UNITED STATES DEPARTMENT OF AGRICULTURE

FOREST SERVICE

**R2**

**ROCKY MOUNTAIN REGION**

STAMPS, LOGOS, AND SEALS

| NO. | REVISION / ISSUE | DATE |
|---|---|---|
| 3 | | |
| 2 | | |
| 1 | | |

PROJECT NAME

**BESSEY RECREATION SITE - IRRIGATION IMPROVEMENTS**

**NEBRASKA NATIONAL FOREST & GRASSLANDS**

**BESSEY RANGER DISTRICT**

DRAWING TITLE

CONTROLS, TANK, AND VALVE PLAN DETAILS - DAY-USE

ARCHIVE NO.

DESIGNER J.SMITH

CHECKED

DATE 05/2024

SUB SHEET NO. L2.3

SHEET 20 OF 24

5/28/24 08:43 JAREDASMITH C:\USERS\JAREDASMITH\DOCUMENTS\AUTOCAD__PROJECTS\NEBRASKANF\BESSEY\TYP_IRRIGATION_BESSEY.DWG;

EXAMPLE STORAGE SHED

GROUP SITE NOTES:

1. EXISTING UTILITY LOCATIONS ARE APPROXIMATE AND SHALL BE SURVEYED PRIOR TO ANY CONSTRUCTION OR INSTALLATION.
2. EXISTING WELL PUMP ELECTRIC WILL BE INSTALLED IN A TEMPORARY MANOR IN PREPARATION FOR THIS IRRIGATION CONTRACT. CONTRACTOR SHALL PERMANENTLY INSTALL WELL PUMP ELECTRICAL BOX.
3. CONSTRUCT A 5 FT WIDE BY 3 FT DEEP BY 5 FT HIGH SIMPLE SLOPED ROOF WOODEN STORAGE SHED TO MATCH THE COLOR AND STYLE OF THE GROUP SHELTER BUILDING. STORAGE SHED SHALL CONTAIN ALL WELL PUMP ELECTRIC, WELL PUMP CONTROLS, PRESSURE TANK WITH FITTINGS, AND IRRIGATION CONTROLS. STORAGE SHED SHALL BE PAINTED FOREST SERVICE BROWN OR APPROVED EQUAL. CONTRACTOR SHALL SUBMIT PLANS AND DRAWINGS FOR PROPOSED STORAGE SHED AND SHALL BE APPROVED BY CONTRACTING OFFICER PRIOR TO INSTALLATION. EXAMPLE STORAGE SHED SHOWN ON THIS SHEET.
4. ALL IRRIGATION COMPONENTS SHALL BE INSTALLED PER THE MANUFACTURER'S RECOMMENDATIONS, UNLESS OTHERWISE APPROVED.
5. ALL IRRIGATION SYSTEM FITTINGS SHALL BE 4" MIN. DISTANCE FROM ANY OTHER FITTING, VALVE, OR CONNECTION.
6. CONTRACTOR SHALL CREATE AS-BUILT DRAWINGS AND PLANS FOR ALL ELEMENTS OF THE IRRIGATION SYSTEM.
7. MANIFOLD & VALVE BOX DESIGN AS SHOWN IS FOR REFERENCE ONLY. CONTRACTOR SHALL SPECIFY VALVE MANIFOLD DESIGN AND SUBMIT TO CONTRACTING OFFICER FOR APPROVAL.
8. CONTRACTOR SHALL DETERMINE PROPOSED FITTING TO CONNECT GALVANIZED METAL PIPING TO PROPOSED SCH. 40 PVC MAINLINE PIPING, CONTRACTING OFFICER SHALL APPROVE PRIOR TO INSTALLATION.
9. IRRIGATION MAINLINE AND FITTINGS SHALL BE 2"Ø SCH. 40 PVC SPECIFICALLY DESIGNED FOR IRRIGATION.
10. IRRIGATION LATERAL LINES SHALL BE 2"Ø POLYETHYLENE OR "POLY" PIPING W/ 2" INSERT FITTING SECURED W/ (QTY. 2) "CRIMP-STYLE" STAINLESS STEEL CLAMPS ON EACH CONNECTION, SPECIFICALLY DESIGNED FOR IRRIGATION.
11. INTENT IS FOR THE IRRIGATION SYSTEM TO RUN AT 40 GPM AND AT 40 PSI MIN. AT ALL SPRINKLER HEADS.
12. INTENT IS TO HAVE THIS IRRIGATION SYSTEM WINTERIZED EASILY AND BY ON-SITE FOREST SERVICE PERSONNEL.
13. JUMBO VALVE BOXES SHALL BE "RAINBIRD'S JUMBO VALVE BOX-VBJMB" OR APPROVED EQUAL.
14. INSTALL AUTO DRAIN VALVES AT ALL LOW POINTS AND EVERY 100 FEET ALONG IRRIGATION LATERAL LINES & MAIN PIPING.

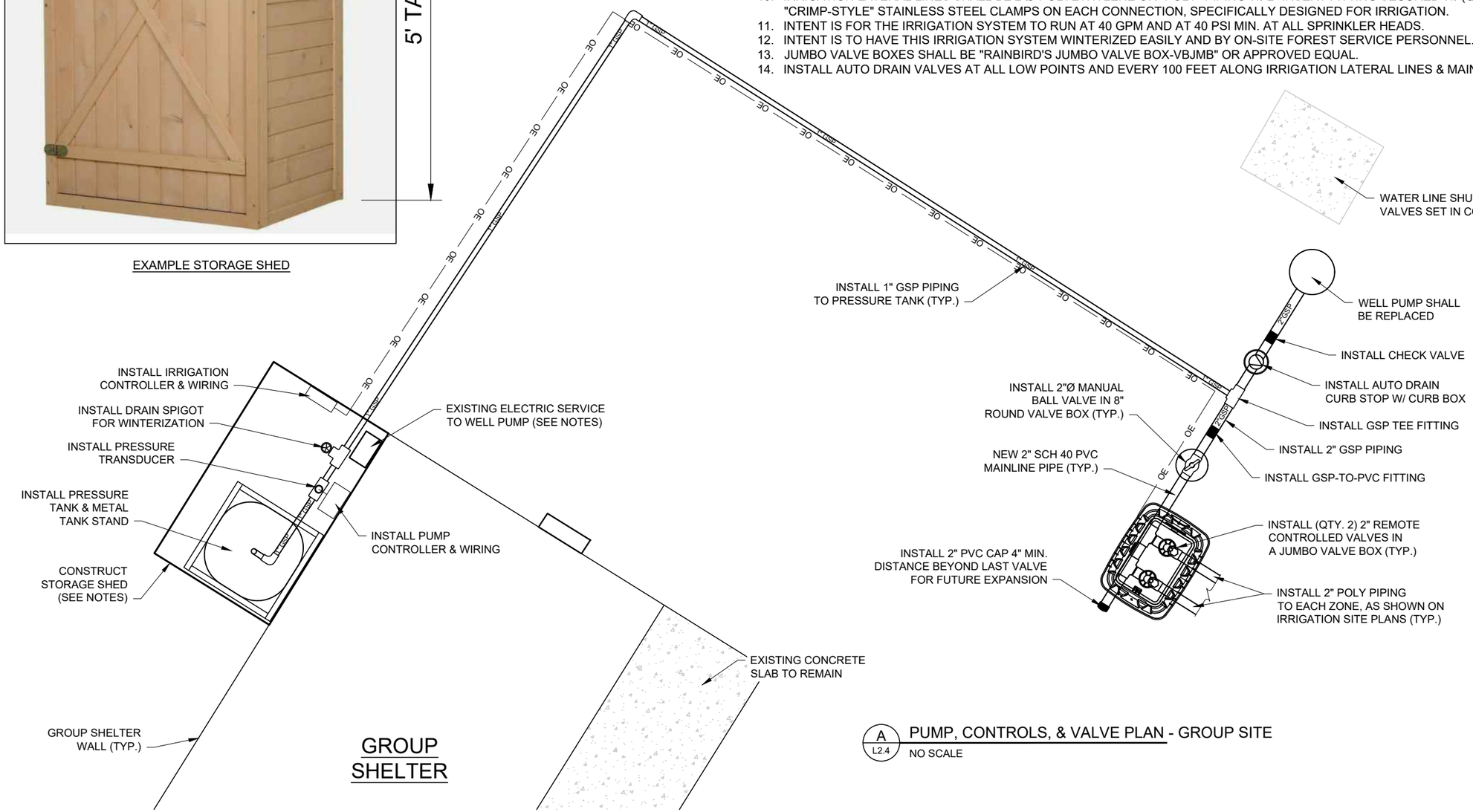


A / L2.4 PUMP, CONTROLS, & VALVE PLAN - GROUP SITE

NO SCALE

UNITED STATES DEPARTMENT OF AGRICULTURE

FOREST SERVICE

**R2**

**ROCKY MOUNTAIN REGION**

STAMPS, LOGOS, AND SEALS

| NO. | REVISION / ISSUE | DATE |
|---|---|---|
| 3 | | |
| 2 | | |
| 1 | | |

PROJECT NAME

**BESSEY RECREATION SITE - IRRIGATION IMPROVEMENTS**

**NEBRASKA NATIONAL FOREST & GRASSLANDS**

**BESSEY RANGER DISTRICT**

DRAWING TITLE

CONTROLS, TANK, AND VALVE PLAN DETAILS - GROUP SITE (OPTION BID ITEM)

ARCHIVE NO.

DESIGNER J.SMITH

CHECKED

SUB SHEET NO. L2.4

DATE 05/2024

SHEET 21 OF 24

5/28/24 08:43 JAREDASMITH C:\USERS\JAREDASMITH\DOCUMENTS\AUTOCAD_PROJECTS\NEBRASKANF\BESSEY\TYP_IRRIGATION_BESSEY.DWG;

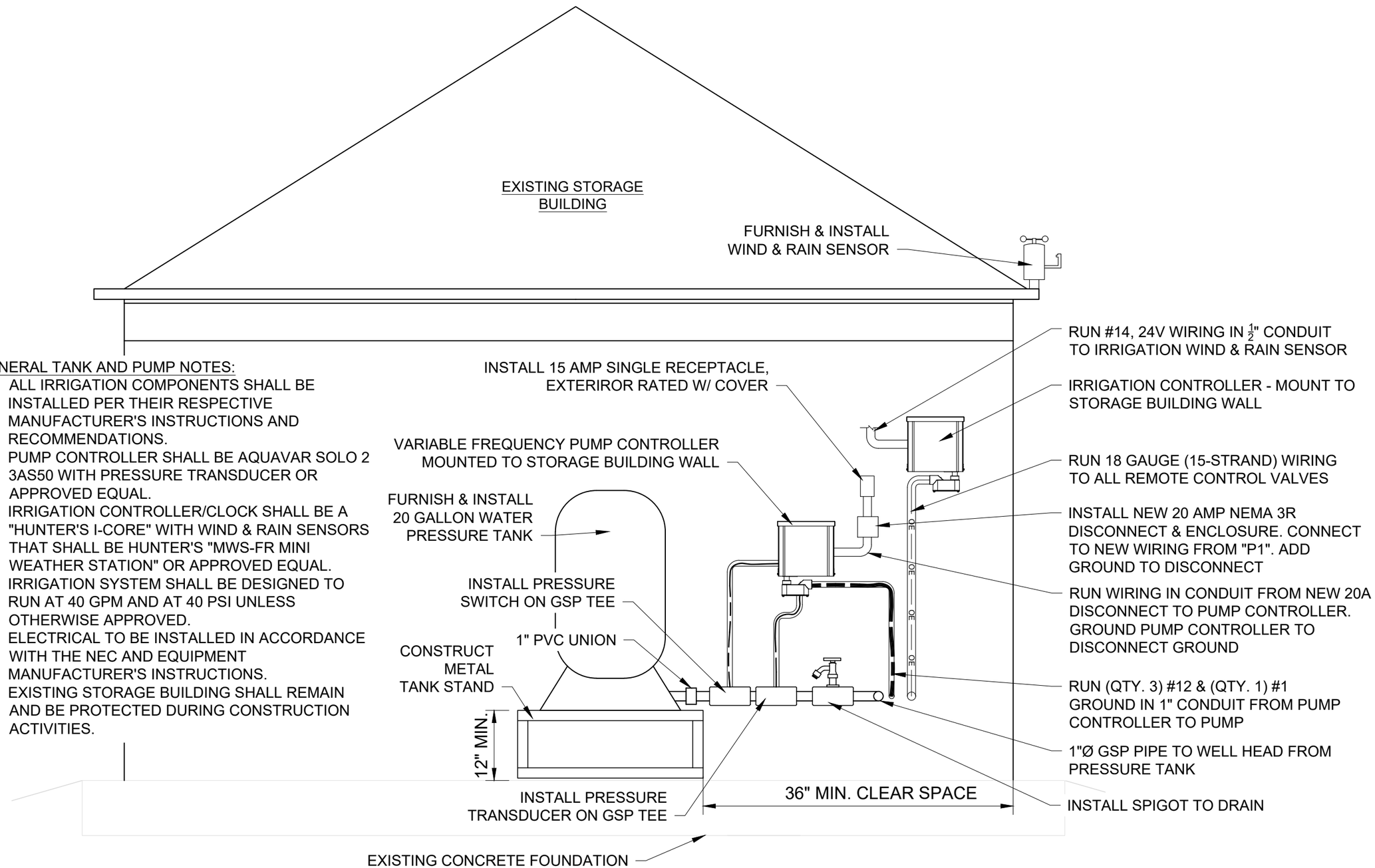


GENERAL TANK AND PUMP NOTES:

1. ALL IRRIGATION COMPONENTS SHALL BE INSTALLED PER THEIR RESPECTIVE MANUFACTURER'S INSTRUCTIONS AND RECOMMENDATIONS.
2. PUMP CONTROLLER SHALL BE AQUAVAR SOLO 2 3AS50 WITH PRESSURE TRANSDUCER OR APPROVED EQUAL.
3. IRRIGATION CONTROLLER/CLOCK SHALL BE A "HUNTER'S I-CORE" WITH WIND & RAIN SENSORS THAT SHALL BE HUNTER'S "MWS-FR MINI WEATHER STATION" OR APPROVED EQUAL.
4. IRRIGATION SYSTEM SHALL BE DESIGNED TO RUN AT 40 GPM AND AT 40 PSI UNLESS OTHERWISE APPROVED.
5. ELECTRICAL TO BE INSTALLED IN ACCORDANCE WITH THE NEC AND EQUIPMENT MANUFACTURER'S INSTRUCTIONS.
6. EXISTING STORAGE BUILDING SHALL REMAIN AND BE PROTECTED DURING CONSTRUCTION ACTIVITIES.

A / L2.5 STORAGE BUILDING - INTERIOR DETAILS

NO SCALE

UNITED STATES DEPARTMENT OF AGRICULTURE

FOREST SERVICE

R2

ROCKY MOUNTAIN REGION

STAMPS, LOGOS, AND SEALS

| NO. | REVISION / ISSUE | DATE |
|---|---|---|
| 3 | | |
| 2 | | |
| 1 | | |

PROJECT NAME

BESSEY RECREATION SITE - IRRIGATION IMPROVEMENTS

NEBRASKA NATIONAL FOREST & GRASSLANDS

BESSEY RANGER DISTRICT

DRAWING TITLE

IRRIGATION TANK, CONTROLLERS & ELECTRICAL DETAILS

ARCHIVE NO.

DESIGNER J.SMITH

CHECKED

DATE 05/2024

SUB SHEET NO. L2.5

SHEET 22 OF 24

5/28/24 08:43 JAREDASMITH C:\USERS\JAREDASMITH\DOCUMENTS\AUTOCAD_PROJECTS\NEBRASKANF\BESSEY\TYP_IRRIGATION_BESSEY.DWG;

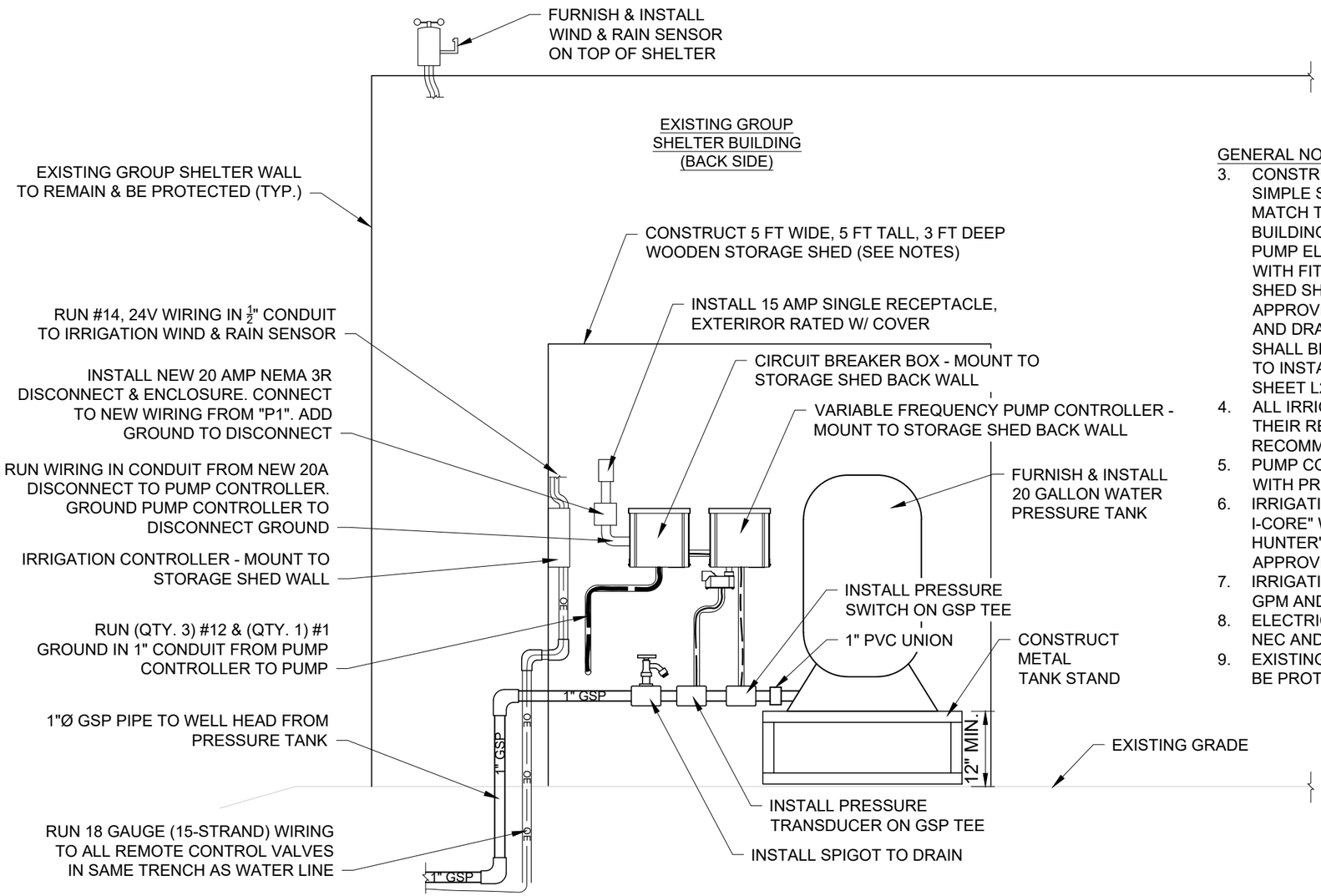


A
L2.6

## NEW STORAGE SHED BUILDING - INTERIOR DETAILS

NO SCALE

GENERAL NOTES:

3. CONSTRUCT A 5 FT WIDE BY 3 FT DEEP BY 5 FT HIGH SIMPLE SLOPED ROOF WOODEN STORAGE SHED TO MATCH THE COLOR AND STYLE OF THE GROUP SHELTER BUILDING. STORAGE SHED SHALL CONTAIN ALL WELL PUMP ELECTRIC, WELL PUMP CONTROLS, PRESSURE TANK WITH FITTINGS, AND IRRIGATION CONTROLS. STORAGE SHED SHALL BE PAINTED FOREST SERVICE BROWN OR APPROVED EQUAL. CONTRACTOR SHALL SUBMIT PLANS AND DRAWINGS FOR PROPOSED STORAGE SHED AND SHALL BE APPROVED BY CONTRACTING OFFICER PRIOR TO INSTALLATION. EXAMPLE STORAGE SHED SHOWN ON SHEET L2.4.
4. ALL IRRIGATION COMPONENTS SHALL BE INSTALLED PER THEIR RESPECTIVE MANUFACTURER'S INSTRUCTIONS AND RECOMMENDATIONS.
5. PUMP CONTROLLER SHALL BE AQUAVAR SOLO 2 3AS50 WITH PRESSURE TRANSDUCER OR APPROVED EQUAL.
6. IRRIGATION CONTROLLER/CLOCK SHALL BE A "HUNTER'S I-CORE" WITH WIND & RAIN SENSORS THAT SHALL BE HUNTER'S "MWS-FR MINI WEATHER STATION" OR APPROVED EQUAL.
7. IRRIGATION SYSTEM SHALL BE DESIGNED TO RUN AT 40 GPM AND AT 40 PSI UNLESS OTHERWISE APPROVED.
8. ELECTRICAL TO BE INSTALLED IN ACCORDANCE WITH THE NEC AND EQUIPMENT MANUFACTURER'S INSTRUCTIONS.
9. EXISTING GROUP SHELTER BUILDING SHALL REMAIN AND BE PROTECTED DURING CONSTRUCTION ACTIVITIES.

UNITED STATES
DEPARTMENT OF AGRICULTURE

FOREST SERVICE

**R2**

**ROCKY MOUNTAIN REGION**

STAMPS, LOGOS, AND SEALS

| NO. | REVISION / ISSUE | DATE |
|---|---|---|
| 3 | | |
| 2 | | |
| 1 | | |

PROJECT NAME

**BESSEY RECREATION SITE - IRRIGATION IMPROVEMENTS**

**NEBRASKA NATIONAL FOREST & GRASSLANDS**

**BESSEY RANGER DISTRICT**

DRAWING TITLE
IRRIGATION TANK, CONTROLLERS, ELECTRICAL, & STORAGE SHED DETAILS - GROUP SITE

ARCHIVE NO.

DESIGNER J.SMITH

CHECKED

SUB SHEET NO. L2.6

DATE 05/2024

SHEET 23 OF 24

5/28/24 08:43 JAREDASMITH C:\USERS\JAREDASMITH\DOCUMENTS\AUTOCAD_PROJECTS\NEBRASKANF\BESSEY\TYP_IRRIGATION_BESSEY.DWG;

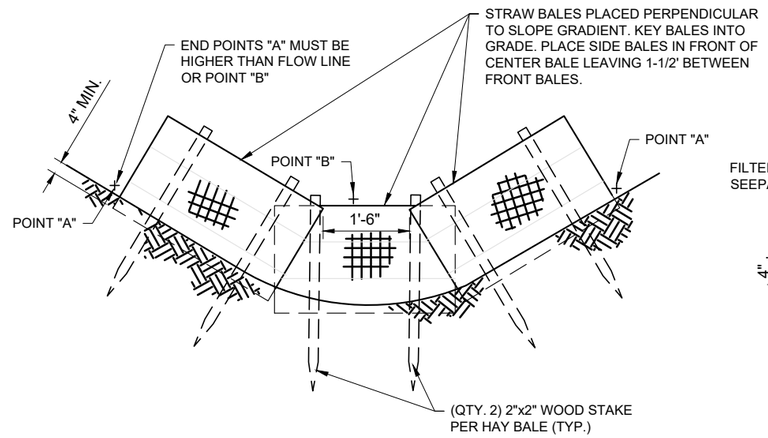


A L3.0 THREE STRAW BALE EROSION DETAILS
NO SCALE

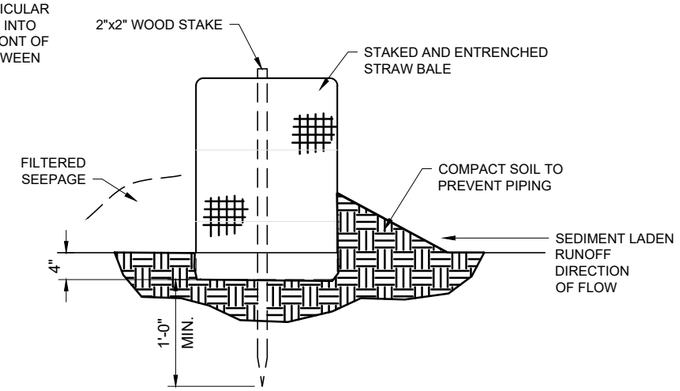


B L3.0 TYPICAL BALE INSTALLATION (END SECTION)
NO SCALE

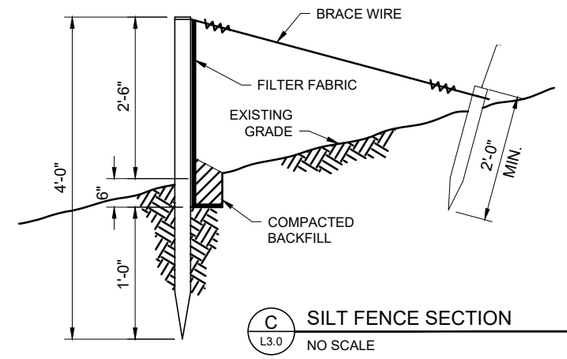


C L3.0 SILT FENCE SECTION
NO SCALE

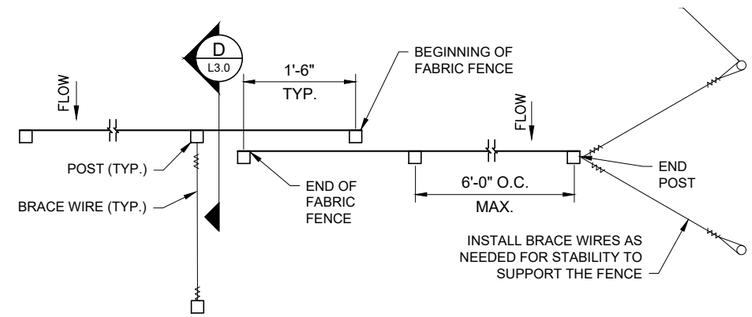


E L3.0 FENCE PLAN VIEW DETAIL
NO SCALE

GENERAL NOTES:
1. STRAW BALES FOR EROSION CONTROL STRUCTURES SHALL BE CERTIFIED WEED FREE.

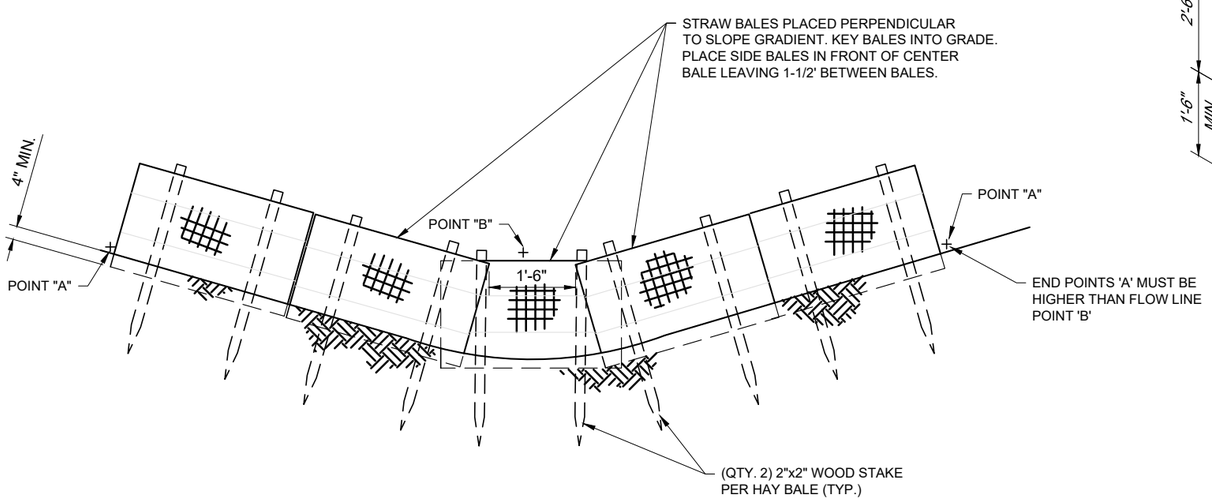


D L3.0 FIVE STRAW BALE EROSION DETAIL
NO SCALE

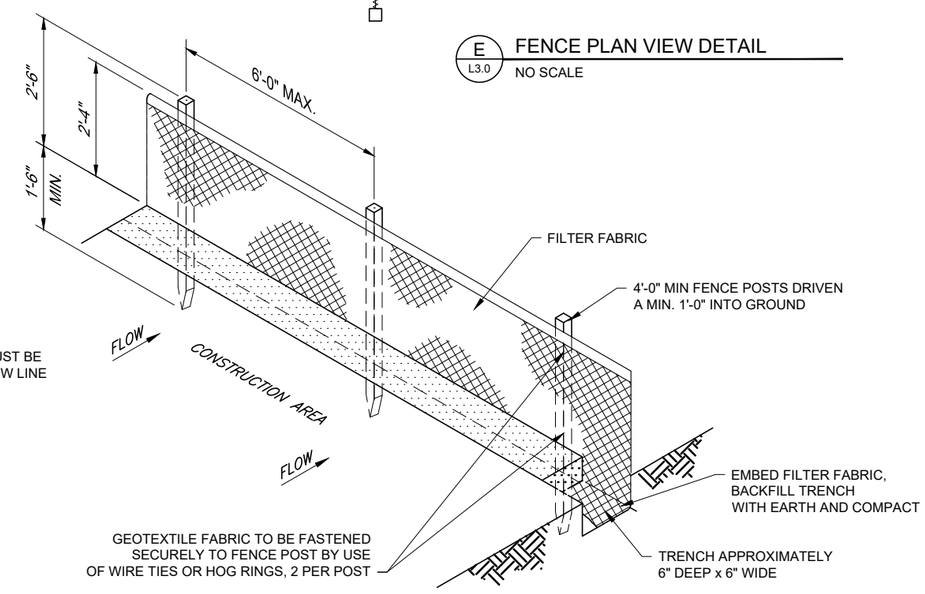


F L3.0 SILT FENCE INSTALLATION DETAILS (ISOMETRIC VIEW)
NO SCALE

UNITED STATES DEPARTMENT OF AGRICULTURE
FOREST SERVICE
**R2**
**ROCKY MOUNTAIN REGION**

STAMPS, LOGOS, AND SEALS

| NO. | REVISION / ISSUE | DATE |
|---|---|---|
| 3 | | |
| 2 | | |
| 1 | | |

PROJECT NAME
**BESSEY RECREATION SITE - IRRIGATION IMPROVEMENTS**
**NEBRASKA NATIONAL FOREST & GRASSLANDS**
**BESSEY RANGER DISTRICT**

DRAWING TITLE
TYPICAL EROSION CONTROL DETAILS

ARCHIVE NO.
DESIGNER J. SMITH
CHECKED
DATE 05/2024
SUB SHEET NO. L3.0
SHEET 24 OF 24

5/17/24 14:28 JAREDASMITH C:\USERS\JAREDASMITH\DOCUMENTS\AUTOCAD_PROJECTS\NEBRASKANF\BESSEY\TYP_EROSION.DWG;