NOTES

1. DESIGN, FURNISH, AND INSTALL A NEW FIRE DETECTION AND ALARM SYSTEM AT THE GLEN CANYON POWERPLANT (SITE A), CARL HAYDEN VISITOR CENTER (SITE B), AND AT THE FACILITY WORKSHOP AND ARMORY SERVICE BUILDING (SITE C). THE GOVERNMENT PROJECT WAREHOUSE (SITE D) DOES NOT REQUIRE A NEW FIRE DETECTION AND ALARM SYSTEM.
2. DESIGN, FURNISH, AND INSTALL A NEW REMOTE MONITORING SYSTEM IN THE CONTROL ROOM OF SITE A, FOR THE REMOTE SUPERVISION OF THE FOLLOWING SITES:
   - 2.1. SITE B.
   - 2.2. SITE C.
   - 2.3. SITE D.
3. THERE IS EXISTING COMMUNICATION INFRASTRUCTURE BETWEEN THE FOLLOWING SITES:
   - 3.1. SITE A TO SITE C HAS SPARE FIBER AVAILABLE.
   - 3.2. SITE A TO SITE D HAS A PLAIN OLD TELEPHONE SERVICE (POTS) LINE AVAILABLE.

— BUREAU OF — RECLAMATION

ALWAYS THINK SAFETY

U.S. DEPARTMENT OF THE INTERIOR
BUREAU OF RECLAMATION
COLORADO RIVER STORAGE PROJECT
MIDDLE RIVER DIVISION - GLEN CANYON UNIT - ARIZONA - UTAH

GLEN CANYON POWERPLANT

FIRE ALARM SYSTEM REPLACEMENT

DESIGNED	V. MILLAN-AGUILAR
DRAWN	V. MILLAN-AGUILAR
CHECKED	T. GRIESS
	TODD GRIESS Digitally signed by TODD GRIESS Date: 2023.08.28 14:12:36 -06'00'
TECH. APPR.	Todd Griess, P.E.
APPROVED	Elizabeth Morley, P.E. PEER REVIEWER - GM, ELECTRICAL CONTROLS GROUP
DENVER, CO	2023-08-21

GENERAL

LOCATION MAP

557-D-60169

SHEET 1

LAST SAVED DATE
2023-08-28
LAST SAVED BY
VMILLANAGUILAR

CAD SYSTEM
AUTOCAD CIVIL (LMS TECH)
CAD FILENAME
557-D-T0001 LOCATION MAP.DWG

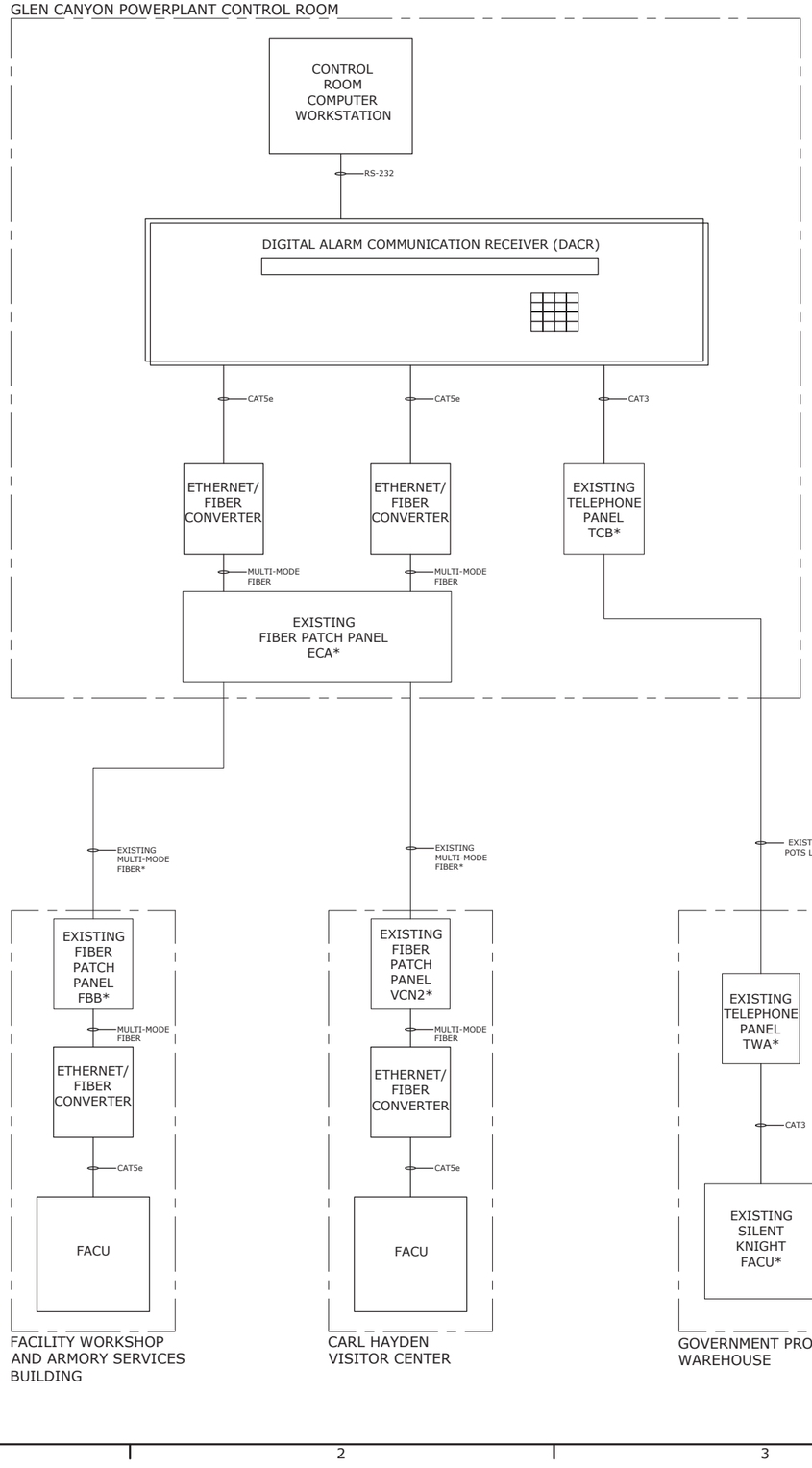

NOTES

1. ITEMS FOLLOWED BY AN (*) INDICATE EXISTING EQUIPMENT. THESE ITEMS SHALL NOT BE MODIFIED EXCEPT AS REQUIRED TO TIE THE REMOTE FACUS TO THE DACR.
2. DRAWINGS ARE BASED ON "TYPICAL" EQUIPMENT INFORMATION AND DO NOT REPRESENT FINAL DESIGN INFORMATION OR DRAWING DETAILS. CONTRACTOR TO VERIFY EXISTING CONDITIONS.
3. NOT ALL CONNECTIONS TO THE EXISTING TELEPHONE SYSTEM ARE SHOWN.
4. CONTRACTOR TO UTILIZE COMPATIBLE CABLES AND NETWORKING EQUIPMENT TO INTEGRATE THE DACR WITH THE FIRE ALARM PANELS.

EXPLANATION

POTS	PLAIN OLD TELEPHONE SERVICE
FACU	FIRE ALARM CONTROL UNIT
DACR	DIGITAL ALARM COMMUNICATION RECEIVER

— BUREAU OF — RECLAMATION

ALWAYS THINK SAFETY

U.S. DEPARTMENT OF THE INTERIOR
BUREAU OF RECLAMATION
COLORADO RIVER STORAGE PROJECT
MIDDLE RIVER DIVISION - GLEN CANYON UNIT - ARIZONA - UTAH

GLEN CANYON POWERPLANT

FIRE ALARM SYSTEM REPLACEMENT

V. MILLAN-AGUILAR — DESIGNED
V. MILLAN-AGUILAR — DRAWN
T. GRIESS — CHECKED
TODD GRIESS Digitally signed by TODD GRIESS Date: 2023.08.28 14:15:31 -06'00' — TECH. APPR. Todd Griess, P.E.
Elizabeth Morley, P.E. — APPROVED Elizabeth Morley, P.E.
PEER REVIEWER - GM, ELECTRICAL CONTROLS GROUP
DENVER, CO 2023-08-21

COMMUNICATION SYSTEM

NETWORK DIAGRAM

557-D-60170

SHEET 1

LAST SAVED DATE
2023-08-28
LAST SAVED BY
VMILLANAGUILAR

CAD SYSTEM
AUTOCAD MAP 3D OS (LMS TECH)
CAD FILENAME
557-D-T0002 NETWORK DIAGRAM.DWG

Varco-Pruden Buildings

A United Dominion Company

JOB NUMBER: 49347

BUILDER: ARIZONA BUILDING SYSTEMS

CUSTOMER: BUREAU OF RECLAMATION

LOCATION: PAGE, ARIZONA

DESCRIPTION: 60' WIDE X 100' LONG
18'-3"/18'-0" EAVE HT.

REVISED NOV 17 1992
DATE
PLEASE DESTROY ALL PREVIOUS PLANS

APPROVAL OF DRAWINGS
Signed drawings is an indication that the dimensions, framing, details, design loads and application have been reviewed and are approved for fabrication.
☐ Approved as submitted ☐ Approved as noted
☐ Disapproved - please resubmit
Architect/Engineer _____
Builder _____

FOR BLDG. DEPT. APPROVAL

	ROOF SHEETING	WALL SHEETING
TYPE:	PANEL RIB	PANEL RIB
COLOR:		
FINISH:	KXL	KXL
GAGE:	26	26
FASTENER:	CARBON LONG	CARBON LONG
RATING:		

	ROOF INSULATION	WALL INSULATION
TYPE:		
FACING:		
WIDTH:		
THICKNESS:		

LOADING INFORMATION

LIVE LOAD:	20.0	PSF
WIND LOAD:	80.	MPH
ADDL LOAD:	3.0	PSF
BLDG YR/CODE:	1988 UBC	
SEISMIC ZONE:	2B	
MBMA BLDG USE:	1	
EXPOSURE:	C	

ACCESSORIES

SEE ACCESSORY LISTINGS ON ATTACHED ELEVATIONS AND PLAN DRAWINGS.

ADDITIONAL LOADS

(6) EVAPORATE COOLERS @ 500# EA.

MOUNTING SUPPORT JAMBS TO GROUND.

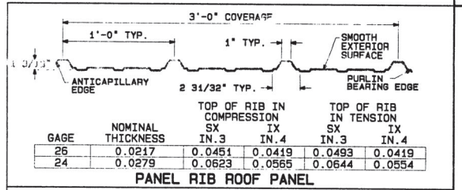

GAGE	NOMINAL THICKNESS	TOP OF RIB IN COMPRESSION SX IN.3	TOP OF RIB IN COMPRESSION IX IN.4	TOP OF RIB IN TENSION SX IN.3	TOP OF RIB IN TENSION IX IN.4
26	0.0217	0.0451	0.0419	0.0493	0.0419
24	0.0279	0.0623	0.0565	0.0644	0.0554

PANEL RIB ROOF PANEL

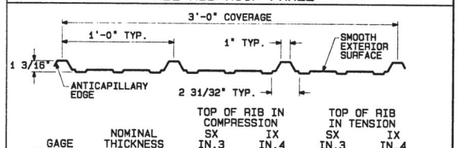

GAGE	NOMINAL THICKNESS	TOP OF RIB IN COMPRESSION SX IN.3	TOP OF RIB IN COMPRESSION IX IN.4	TOP OF RIB IN TENSION SX IN.3	TOP OF RIB IN TENSION IX IN.4
26	0.0217	0.0451	0.0419	0.0493	0.0419
24	0.0279	0.0623	0.0565	0.0644	0.0554

PANEL RIB WALL PANEL

GENERAL NOTES

1. MATERIALS

	ASTM DESIGNATION	
STRUCTURAL STEEL PLATE	A-36 MODIFIED OR A-572	FY= 50 KSI (GRADE 50)
COLD-FORMED LIGHT GAGE SHAPES	A-570	FY= 55 KSI (GRADE 55)
BRACE RODS	A-572	GRADES 65, 55, OR 50
HOT-ROLLED MILL SHAPES	A-36; A-572	FY= 36 KSI; FY= 50 KSI
ROOF AND WALL SHEETING	A-446	FY= 50 KSI (GRADE D)
BOLTS	A-307 AND A-325	

2. STRUCTURAL PRIMER

SHOP PRIMER PAINT IS A RUST INHIBITIVE PRIMER AND IS VARCO-PRUDEN COLOR TAHITIAN BRONZE. THIS PAINT IS NOT INTENDED FOR LONG-TERM EXPOSURE TO THE ELEMENTS.

3. A-325 BOLT TIGHTENING REQUIREMENTS

ALL HIGH-STRENGTH BOLTS ARE A325-N UNLESS SPECIFICALLY NOTED OTHERWISE.

STRUCTURAL BOLTS SHALL BE TIGHTENED BY TURN-OF-THE-NUT METHOD IN ACCORDANCE WITH THE EIGHTH EDITION, AISC "SPECIFICATION FOR STRUCTURAL JOINTS USING ASTM A325 OR A490 BOLTS". PER SECTION 5B, A325 BOLTS MAY BE INSTALLED WITHOUT WASHERS WHEN TIGHTENED BY TURN-OF-THE-NUT METHOD. IT IS THE RESPONSIBILITY OF THE ERECTOR TO ASSURE PROPER TIGHTNESS.

ALL BOLTED CONNECTIONS, UNLESS NOTED, ARE DESIGNED AS BEARING-TYPE CONNECTIONS WITH BOLT THREADS NOT EXCLUDED FROM THE SHEAR PLANE. (INSPECTION NOT REQ'D PER 1988 UBC SECT. 306.A.6.2)

4. BUILDER/CONTRACTOR RESPONSIBILITIES

VARCO-PRUDEN'S STANDARD PRODUCT SPECIFICATIONS APPLY AND, UNLESS STIPULATED OTHERWISE IN THE CONTRACT DOCUMENTS, VARCO-PRUDEN'S DESIGN, FABRICATION, QUALITY CRITERIA STANDARDS AND TOLERANCES WILL GOVERN THE WORK. (A VARCO-PRUDEN SPECIFICATION BOOKLET IS AVAILABLE UPON REQUEST.)

IN CASE OF DISCREPANCIES BETWEEN VARCO-PRUDEN STRUCTURAL PLANS AND PLANS FOR OTHER TRADES, THE VARCO-PRUDEN PLANS SHALL GOVERN.

IT IS THE RESPONSIBILITY OF THE BUILDER/CONTRACTOR TO OBTAIN APPROPRIATE APPROVALS AND NECESSARY PERMITS FROM CITY, COUNTY, STATE, OR FEDERAL AGENCIES, AS REQUIRED.

APPROVAL OF VARCO-PRUDEN DRAWINGS CONSTITUTES THE BUILDER/CONTRACTOR'S ACCEPTANCE OF THE VARCO-PRUDEN INTERPRETATION OF THE CONTRACT PURCHASE ORDER.

ONCE THE BUILDER/CONTRACTOR OR A/E FIRM HAS SIGNED VARCO-PRUDEN APPROVAL PACKAGE, CHANGES FROM THE PURCHASE ORDER BY THE BUILDER WILL BE BILLED TO THE BUILDER/CONTRACTOR FOR MATERIAL, ENGINEERING, AND HANDLING FEES. SUCH CHANGES MAY CAUSE THE PROJECT TO BE MOVED FROM THE FABRICATION AND/OR SHIPPING SCHEDULE. A PENALTY FEE MAY BE CHARGED IF THE PROJECT MUST BE MOVED FROM THE FABRICATION AND/OR SHIPPING SCHEDULE, AS LONG AS VARCO-PRUDEN DESIGN AND DETAILING APPROACH COMPLIES WITH THE PURCHASE ORDER.

THE BUILDER/CONTRACTOR OR A/E FIRM ARE RESPONSIBLE FOR THE OVERALL PROJECT COORDINATION. ALL INTERFACE AND COMPATIBILITY CONCERNING ANY MATERIALS NOT FURNISHED BY VARCO-PRUDEN ARE TO BE CONSIDERED AND COORDINATED BY THE BUILDER/CONTRACTOR OR A/E FIRM. UNLESS SPECIFIC DESIGN CRITERIA CONCERNING THIS INTERFACE BETWEEN MATERIALS IS FURNISHED AS PART OF THE PURCHASE ORDER, VARCO-PRUDEN ASSUMPTIONS WILL GOVERN.

THE BUILDER/CONTRACTOR IS RESPONSIBLE TO INSURE THAT ALL OTHER PROJECT PLANS AND SPECIFICATIONS COMPLY WITH THE APPLICABLE REQUIREMENTS OF ANY GOVERNING BUILDING AUTHORITIES. SUPPLYING SEALED ENGINEERING DESIGN DATA AND DRAWINGS FOR THE VARCO-PRUDEN BUILDING DOES NOT IMPLY OR CONSTITUTE AN AGREEMENT THAT VARCO-PRUDEN OR ITS DESIGN ENGINEER IS ACTING AS THE ENGINEER OF RECORD OR DESIGN PROFESSIONAL FOR THE CONSTRUCTION PROJECT. THESE DRAWINGS AND DESIGN DATA ARE SEALED AS TO THE STRUCTURAL SYSTEM FURNISHED BY VARCO-PRUDEN, IN COMPLIANCE WITH ALL REQUIREMENTS OF THE PURCHASE ORDER.

THE BUILDER/CONTRACTOR IS RESPONSIBLE FOR SETTING OF ANCHOR BOLTS AND ERECTION OF STEEL BUILDING COMPONENTS IN ACCORDANCE WITH VARCO-PRUDEN'S "FOR CONSTRUCTION" DRAWINGS. TEMPORARY SUPPORTS OR BRACING REQUIRED FOR THE BUILDING ERECTION WILL BE THE RESPONSIBILITY OF THE ERECTOR TO DETERMINE, FURNISH, AND INSTALL.

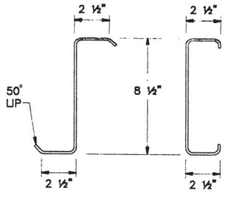

THICKNESS CODE	NOMINAL THICKNESS	8 ½" ZEE IX IN4	8 ½" ZEE SX IN3	8 ½" CEE IX IN4	8 ½" CEE SX IN3
7	.059	9.04	1.778	8.89	1.860
6	.065	10.05	2.088	9.87	2.197
5	.073	11.50	2.561	11.24	2.601
4	.082	12.90	3.027	12.59	2.963
3	.092	14.43	3.396	14.08	3.313
2	.105	16.42	3.864	16.00	3.765
1	.120	18.70	4.400	18.19	4.280

GIRTS / PURLINS

FOR INFORMATION ONLY

JOB NUMBER: 49347
BUILDER: ARIZONA BUILDING SYSTEMS
CUSTOMER: BUREAU OF RECLAMATION
LOCATION: PAGE, ARIZONA
DESCRIPTION: 60' WIDE X 100' LONG
18'-3"/18'-0" EAVE HT.

M2668

P.C.: CA CODER: CHECKER: RUN: 11/03/92 12:29:31 49347

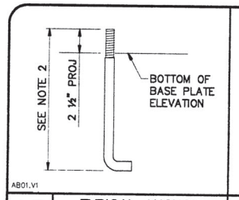

AB1 TYPICAL ANCHOR BOLT PROJECTION

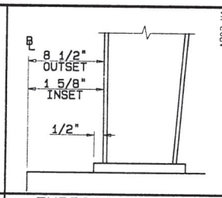

TYPICAL COLUMN BASE PLATE DETAIL

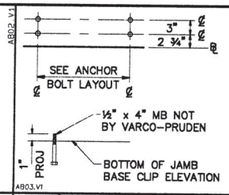

FO FRAMED OPENING

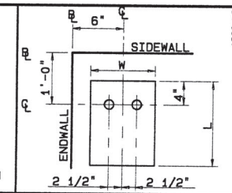

A 3/4" DIAM. A-36 A. BOLTS

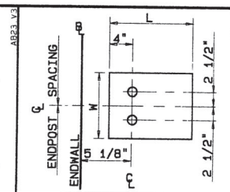

B 3/4" DIAM. A-36 A. BOLTS

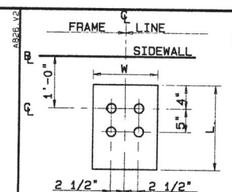

C 3/4" DIAM. A-36 A. BOLTS

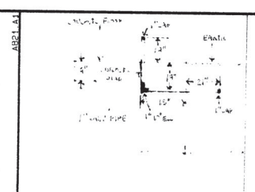

DD 1/2" GALV. EMBEDDED PIPE

DIMENSIONS
1 3'-4 3/4

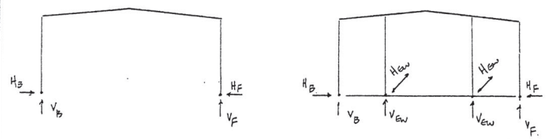

RIGID FRAMES @ FL 2, 3, 4

P & B ENDWALLS @ Ⓓ & Ⓕ

	LOCATION	H_B	V_B	H_F	V_F			H_{EW}	V_{EW}
P&B @ FL Ⓓ & Ⓕ	DEAD + LIVE	-	2.47	-	2.47			-	7.41
	DEAD + WIND	-2.55	-0.57	2.55	-0.57			±4.77	-2.21
	DEAD + ½ LIVE + WIND	-2.55	0.35	2.55	0.35			±4.77	0.61
	DEAD + LIVE + ½ WIND	-1.78	1.87	1.28	1.87			±2.39	5.42
RIGID FRAME FL 2, 3, 4	DEAD + LIVE	10.95	19.61	10.95	19.60				
	DEAD + WIND	-10.27	-7.55	1.39	-3.89				
	DEAD + ½ LIVE + WIND	-6.0	-0.05	5.66	3.61				
	DEAD + LIVE + ½ WIND	4.61	13.53	10.44	15.36				

BRACING REACTIONS

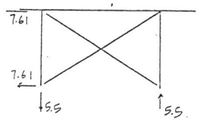

REACTIONS

BLUE - NOTES
RED - ADD

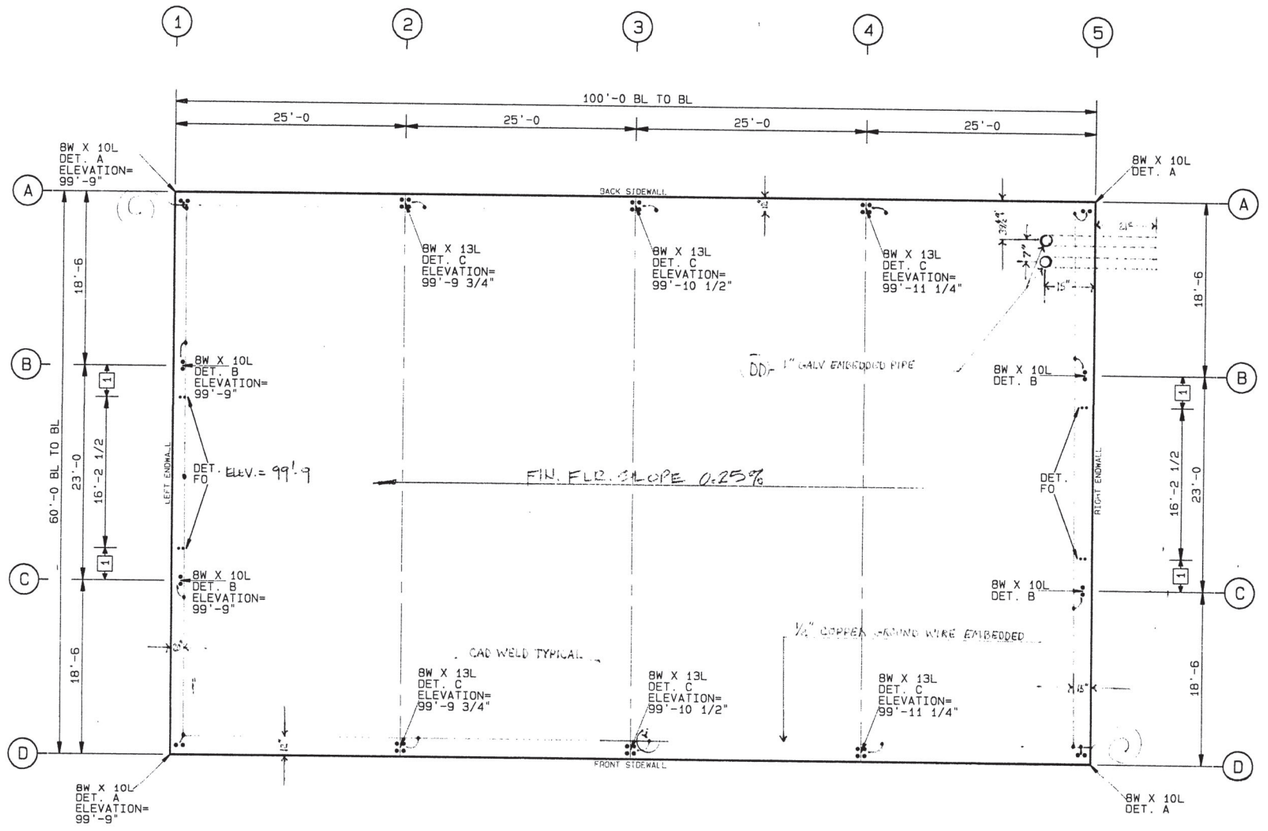

FOR INFORMATION ONLY

SPECIAL NOTES
FINISHED FLOOR ELEVATION (U.O.N.) = VARIES
BOTTOM OF BASE PLATE ELEVATION (U.O.N) = 100'-0"
BOTTOM OF JAMB BASE CLIP ELEV. (U.O.N.) = 100'-0"
(U.O.N.) = UNLESS OTHERWISE NOTED

GENERAL NOTES
1. CONCRETE, GROUT, ANCHOR BOLTS, AND ANY OTHER EMBEDDED ITEMS ARE TO BE FURNISHED BY OTHERS.
2. ANCHOR BOLT DIAMETERS WERE DETERMINED BY ALLOWABLE SHEAR AND TENSION PER AISC SPECIFICATIONS (FY = 36 KSI). ANCHOR BOLT LENGTH AND METHOD OF TRANSFERRING FORCES FROM ANCHOR BOLTS TO FOOTINGS ARE TO BE DETERMINED BY OTHERS.
3. DESIGN LOADS, AND REACTIONS ARE FURNISHED ON OTHER DOCUMENTS.
4. FOUNDATION MUST BE LEVEL, SQUARE, AND SMOOTH. ANCHOR BOLTS MUST BE ACCURATELY PLACED AS SHOWN ON THIS DRAWING OR STEEL WILL NOT FIT.
5. O&M PERSONNEL INSTALLED A ½ INCH COPPER GROUND WIRE TO THE REINFORCING STEEL MAT WITH CAD WELDS @ EACH COLUMN WITH PIGTAILS FOR FUTURE GROUNDING OF THE METAL BUILDING.
6. O&M PERSONNEL INSTALLED TWO(2) 1-INCH GALV. PIPE EMBEDDED IN THE CONCRETE FOR FUTURE USE AS A WATER LINE FOR THE EVAPORATED COOLERS

FOR BLDG. DEPT. APPROVAL

THIS DRAWING, INCLUDING THE INFORMATION HEREON, REMAINS THE PROPERTY OF VARCO-PRUDEN BUILDINGS, A UNITED DOMINION COMPANY. IT IS PROVIDED SOLELY FOR ERECTING THE BUILDING DESCRIBED IN THE APPLICABLE PURCHASE ORDER AND SHALL NOT BE MODIFIED, REPRODUCED OR USED FOR ANY OTHER PURPOSE WITHOUT PRIOR WRITTEN APPROVAL OF VARCO-PRUDEN BUILDINGS.

THE GENERAL CONTRACTOR AND/OR ERECTOR IS SOLELY RESPONSIBLE FOR ACCURATE, GOOD QUALITY WORKMANSHIP IN ERECTING THIS BUILDING IN CONFORMANCE WITH THIS DRAWING. DETAILS REFERENCED IN THIS DRAWING, ALL APPLICABLE VARCO-PRUDEN ERECTION GUIDES, AND INDUSTRY STANDARDS PERTAINING TO PROPER ERECTION, INCLUDING THE CORRECT USE OF TEMPORARY BRACING.

ANCHOR BOLT LAYOUT M2669

BUILDER: ARIZONA BUILDING SYSTEMS
CUSTOMER: BUREAU OF RECLAMATION
LOCATION: PAGE, ARIZONA

DATE	REV	DATE	BY	DESCRIPTION
11/ 3/92	1	11-3-92	JK	As-built

APPRX. SCALE 1/8 "=1'

VARCO-PRUDEN BUILDINGS
A United Dominion Company

MBMA METAL BUILDING MANUFACTURERS ASSOCIATION

22132 J. H. SMITH

THIS DRAWING IS SEALED ONLY AS TO THE COMPONENTS FURNISHED BY VARCO-PRUDEN

JOB NO. 49347
DR. BY MDR
CK. BY
DRAWING ONE OF 13

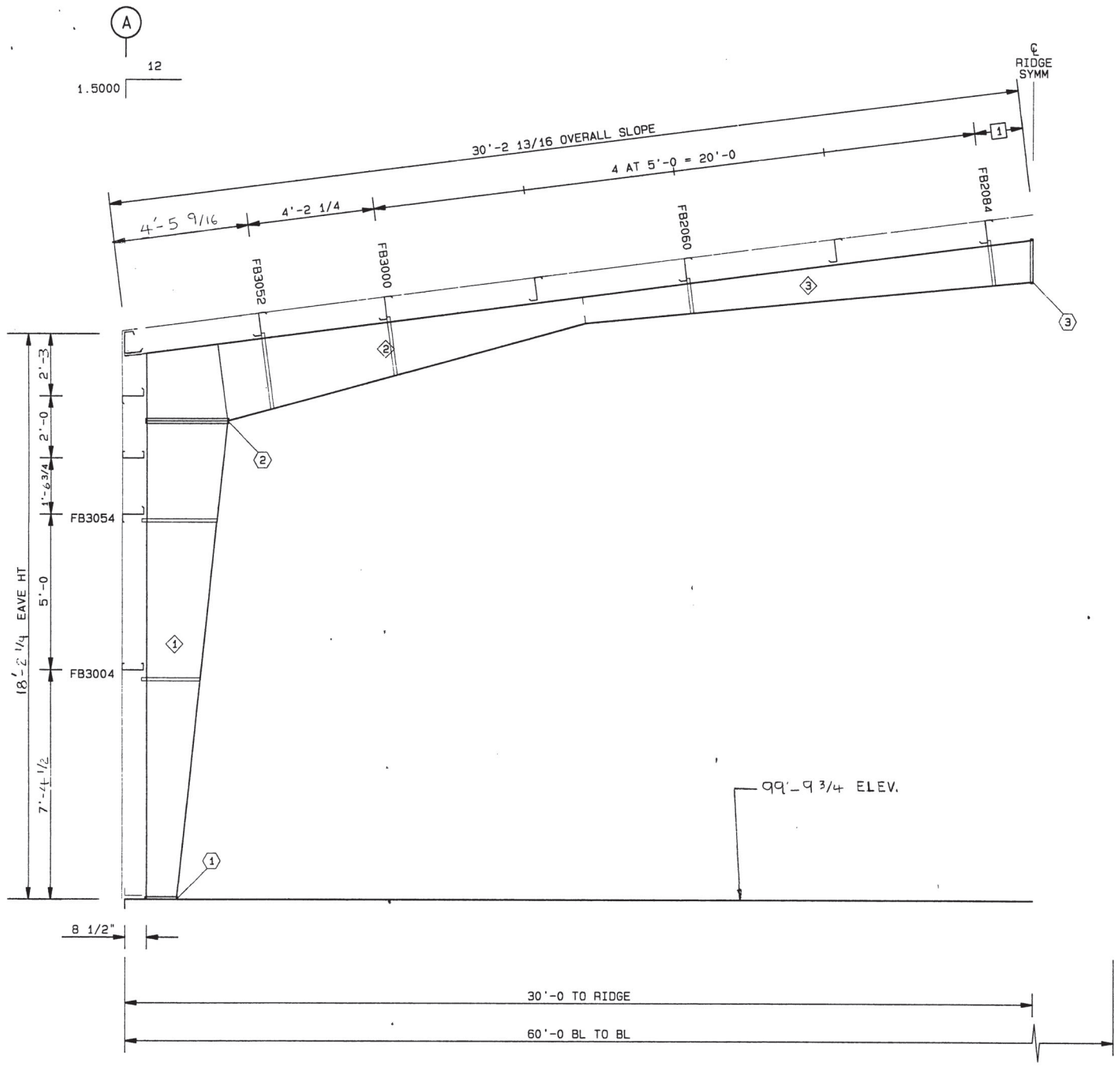

BUILDING CROSS SECTION AT FRAME LINE(S) 2

DIMENSIONS
[1] 1'-7 1/16

A36 ANCHOR BOLTS			
CONN NO	BASE PLATE SIZE	BOLT QTY	BOLT DIA
1	8" X 13" X 3/8"	4	3/4"

A325 CONNECTION BOLTS					
CONN NO	BOLTS	PLT THK	ROW OUT	ROW IN	WELD SIZE
2	(14) 3/4" X 2"	1/2"	4	3	1/4"
3	(6) 3/4" X 2"	1/2"	1	2	3/16"

ALL BOLTS 1/2" A307 U.N., LENGTH AS SHOWN
USE 1/2" A325 BOLTS AT SFB FLANGE BRACES
FLANGE BRACE AT INT. SIDE ONLY ON END FRAMES

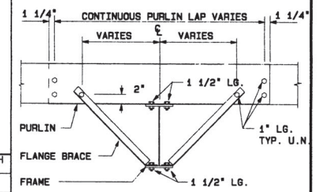

NOTICE
TO ASSURE STRUCTURAL INTEGRITY, INSTALL FLANGE BRACES AND CONNECTION BOLTS AT ALL LOCATIONS SHOWN ON DRAWINGS.

TYPICAL CONNECTIONS
PURLIN, PURLIN LAP & FLANGE BRACE AT FRAME

FOR INFORMATION ONLY

MEM NO	FLANGE T X W	WEB THK	DEPTH (IN) START/END	LENGTH (FT)
1	1/4 X 5.0	3/16	12.00/32.00	17.6
2	1/4 X 5.0	3/16	30.00/10.00	14.5
3	3/16 X 5.0	1/8	10.00/16.00	15.0
4	3/16 X 5.0	1/8	16.00/10.00	15.0
5	1/4 X 5.0	3/16	10.00/30.00	14.5
6	1/4 X 5.0	3/16	32.00/12.00	17.6

FRAME CLEARANCES
CLEAR UNDER HAUNCH AT COLUMN LINE " A " = 15'-5
CLEAR UNDER HAUNCH AT COLUMN LINE " D " = 15'-5
CLEAR DISTANCE BETWEEN KNEES AT HAUNCH = 53'-3
CLEAR UNDER FRAME AT THE RIDGE = 19'-11 3/8

GENERAL NOTES
1. A325 HIGH STRENGTH BOLTS SHALL BE TIGHTENED IN ACCORDANCE WITH THE "SPECIFICATION FOR STRUCTURAL JOINTS USING ASTM A325 OR A490 BOLTS" SECTION 5(C) "TURN-OF-NUT TIGHTENING".
2. USE 1/2" DIA. A307 BOLTS FOR PURLIN TO FRAME, GIRT TO FRAME, AND GIRT TO CLIP CONNECTIONS UNLESS NOTED OTHERWISE. SEE JOB DETAILS FOR BOLT LENGTHS.
3. INSTALLATION OF ADEQUATE TEMPORARY BRACING FOR USE UNTIL CONSTRUCTION IS COMPLETE. IS THE RESPONSIBILITY OF THE ERECTOR.

THIS DRAWING, INCLUDING THE INFORMATION HEREON, REMAINS THE PROPERTY OF VARCO-PRUDEN BUILDINGS, A UNITED DOMINION COMPANY. IT IS PROVIDED SOLELY FOR ERECTING THE BUILDING DESCRIBED IN THE APPLICABLE PURCHASE ORDER AND SHALL NOT BE MODIFIED, REPRODUCED OR USED FOR ANY OTHER PURPOSE WITHOUT PRIOR WRITTEN APPROVAL OF VARCO-PRUDEN BUILDINGS.

THE GENERAL CONTRACTOR AND/OR ERECTOR IS SOLELY RESPONSIBLE FOR ACCURATE, GOOD QUALITY WORKMANSHIP IN ERECTING THIS BUILDING IN CONFORMANCE WITH THIS DRAWING. DETAILS REFERENCED IN THIS DRAWING, ALL APPLICABLE VARCO-PRUDEN ERECTION GUIDES, AND INDUSTRY STANDARDS PERTAINING TO PROPER ERECTION, INCLUDING THE CORRECT USE OF TEMPORARY BRACING.

FRAME CROSS SECTION

m2670

BUILDER: ARIZONA BUILDING SYSTEMS
CUSTOMER: BUREAU OF RECLAMATION
LOCATION: PAGE, ARIZONA

DATE: 11/12/92
SCALE: N.T.S.

REV	DATE	BY	DESCRIPTION
1	11/12	ATA	ADDITIONAL GIRTS FOR WINDOWS

VARCO-PRUDEN BUILDINGS
A United Dominion Company

MBMA METAL BUILDING MANUFACTURERS ASSOCIATION

THIS DRAWING IS SEALED ONLY AS TO THE COMPONENTS FURNISHED BY VARCO-PRUDEN

JOB NO. 49347
DR.BY ATA
CK.BY
DRAWING 2 OF

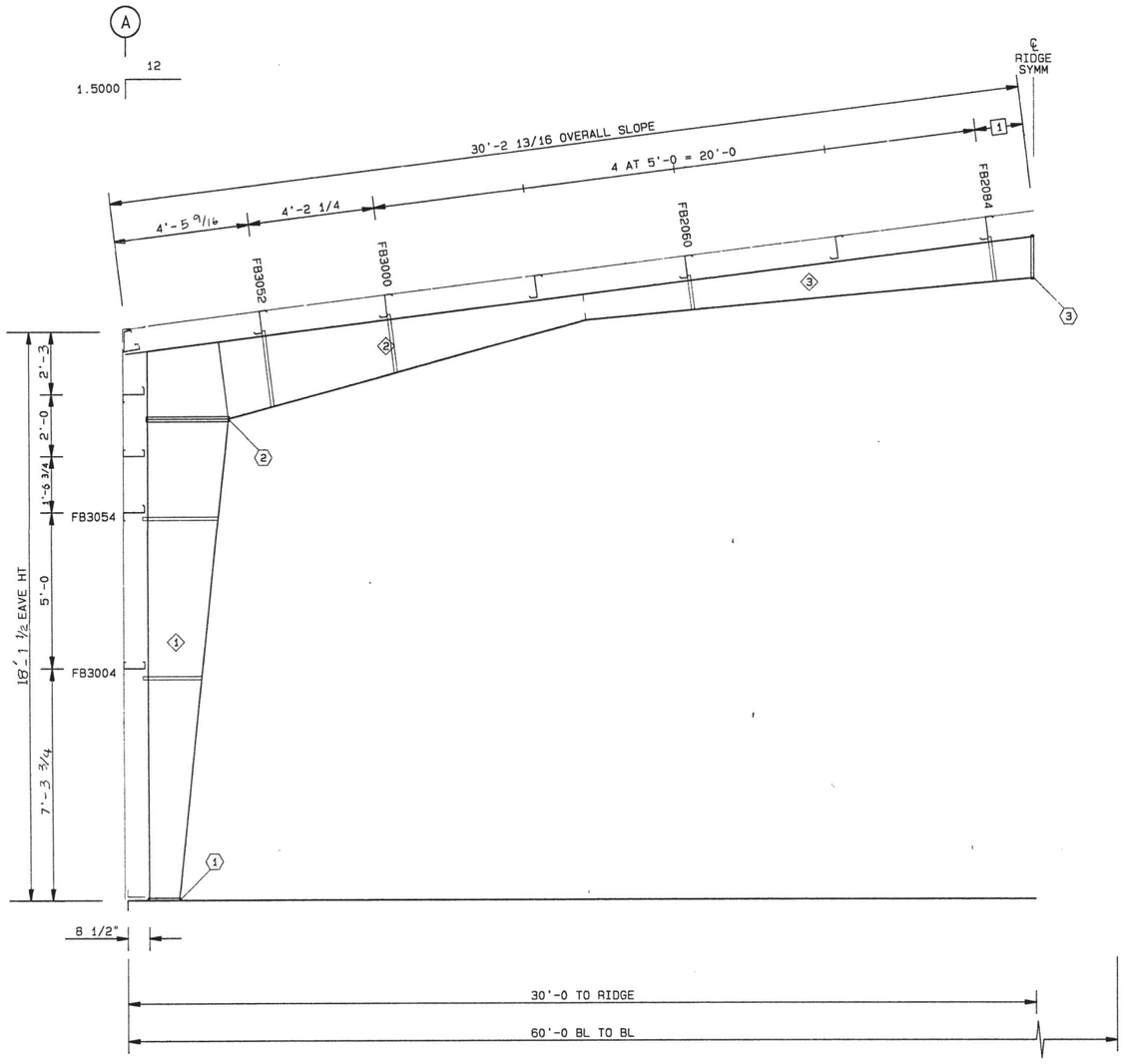

BUILDING CROSS SECTION AT FRAME LINE (S) 3

DIMENSIONS

1	1'-7 1/16

A36 ANCHOR BOLTS			
CONN NO	BASE PLATE SIZE	BOLT QTY	BOLT DIA
1	8" X 13" X 3/8"	4	3/4"

A325 CONNECTION BOLTS					
CONN NO	BOLTS	PLT THK	ROW OUT	ROW IN	WELD SIZE
2	(14) 3/4" X 2"	1/2"	4	3	1/4"
3	(6) 3/4" X 2"	1/2"	1	2	3/16"

ALL BOLTS 1/2" A307 U.N.. LENGTH AS SHOWN
USE 1/2" A325 BOLTS AT SFB FLANGE BRACES
FLANGE BRACE AT INT. SIDE ONLY ON END FRAMES

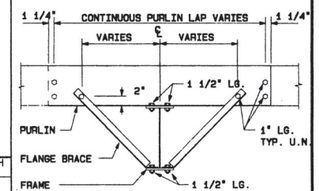

NOTICE
TO ASSURE STRUCTURAL INTEGRITY, INSTALL FLANGE BRACES AND CONNECTION BOLTS AT ALL LOCATIONS SHOWN ON DRAWINGS.

TYPICAL CONNECTIONS
PURLIN, PURLIN LAP & FLANGE BRACE AT FRAME

FOR INFORMATION ONLY

MEM NO	FLANGE T X W	WEB THK	DEPTH (IN) START/END	LENGTH (FT)
1	1/4 X 5.0	3/16	12.00/32.00	17.6
2	1/4 X 5.0	3/16	30.00/10.00	14.5
3	3/16 X 5.0	1/8	10.00/16.00	15.0
4	3/16 X 5.0	1/8	16.00/10.00	15.0
5	1/4 X 5.0	3/16	10.00/30.00	14.5
6	1/4 X 5.0	3/16	32.00/12.00	17.6

FRAME CLEARANCES

CLEAR UNDER HAUNCH AT COLUMN LINE " A "	=	15'-5
CLEAR UNDER HAUNCH AT COLUMN LINE " D "	=	15'-5
CLEAR DISTANCE BETWEEN KNEES AT HAUNCH	=	53'-3
CLEAR UNDER FRAME AT THE RIDGE	=	19'-11 3/8

GENERAL NOTES
1. A325 HIGH STRENGTH BOLTS SHALL BE TIGHTENED IN ACCORDANCE WITH THE "SPECIFICATION FOR STRUCTURAL JOINTS USING ASTM A325 OR A490 BOLTS" SECTION 5 (C) "TURN-OF-NUT TIGHTENING".
2. USE 1/2" DIA. A307 BOLTS FOR PURLIN TO FRAME, GIRT TO FRAME, AND GIRT TO CLIP CONNECTIONS UNLESS NOTED OTHERWISE. SEE JOB DETAILS FOR BOLT LENGTHS.
3. INSTALLATION OF ADEQUATE TEMPORARY BRACING FOR USE UNTIL CONSTRUCTION IS COMPLETE. IS THE RESPONSIBILITY OF THE ERECTOR.

THIS DRAWING, INCLUDING THE INFORMATION HEREON, REMAINS THE PROPERTY OF VARCO-PRUDEN BUILDINGS, A UNITED DOMINION COMPANY. IT IS PROVIDED SOLELY FOR ERECTING THE BUILDING DESCRIBED IN THE APPLICABLE PURCHASE ORDER AND SHALL NOT BE MODIFIED, REPRODUCED OR USED FOR ANY OTHER PURPOSE WITHOUT PRIOR WRITTEN APPROVAL OF VARCO-PRUDEN BUILDINGS.

THE GENERAL CONTRACTOR AND/OR ERECTOR IS SOLELY RESPONSIBLE FOR ACCURATE, GOOD QUALITY WORKMANSHIP IN ERECTING THIS BUILDING IN CONFORMANCE WITH THIS DRAWING. DETAILS REFERENCED IN THIS DRAWING, ALL APPLICABLE VARCO-PRUDEN ERECTION GUIDES, AND INDUSTRY STANDARDS PERTAINING TO PROPER ERECTION, INCLUDING THE CORRECT USE OF TEMPORARY BRACING.

FRAME CROSS SECTION M2671

BUILDER: ARIZONA BUILDING SYSTEMS
CUSTOMER: BUREAU OF RECLAMATION
LOCATION: PAGE, ARIZONA

DATE: 11/12/92
SCALE: N.T.S.

REV	DATE	BY	DESCRIPTION
1	11/17	ATA	ADDITIONAL GIRTS FOR WINDOWS

VARCO-PRUDEN BUILDINGS
A United Dominion Company

MBMA
METAL BUILDING MANUFACTURERS ASSOCIATION

22132 J. H SMITH 11/19/92 REGISTERED ARIZONA, U.S.A.

THIS DRAWING IS SEALED ONLY AS TO THE COMPONENTS FURNISHED BY VARCO-PRUDEN

JOB NO. 49347
DR.BY ATA
CK.BY
DRAWING 3 OF

A

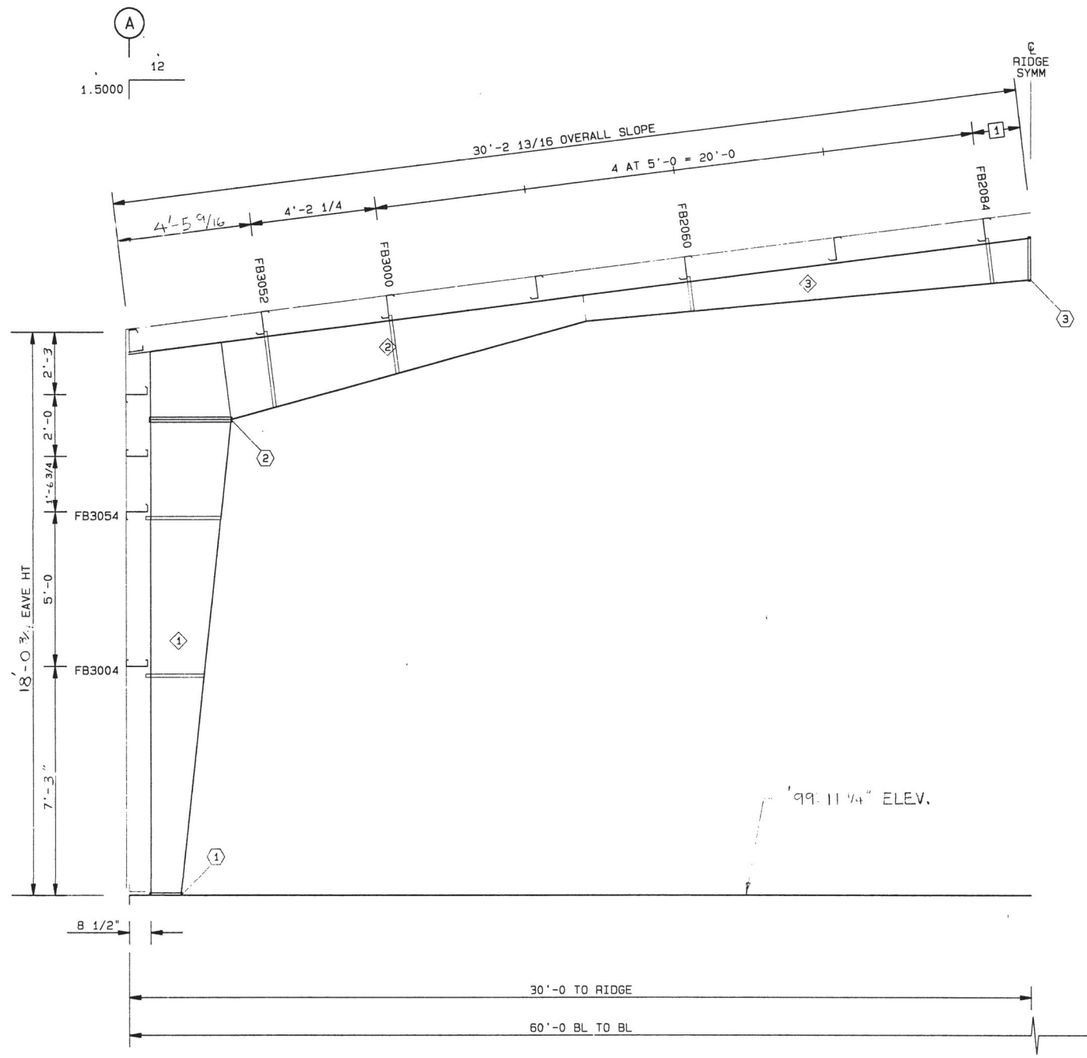

BUILDING CROSS SECTION AT FRAME LINE(S) 4

DIMENSIONS
1 1'-7 1/16

A36 ANCHOR BOLTS			
CONN NO	BASE PLATE SIZE	BOLT QTY	BOLT DIA
1	8" X 13" X 3/8"	4	3/4"

A325 CONNECTION BOLTS					
CONN NO	BOLTS	PLT THK	ROW OUT	ROW IN	WELD SIZE
2	(14) 3/4" X 2"	1/2"	4	3	1/4"
3	(6) 3/4" X 2"	1/2"	1	2	3/16"

ALL BOLTS 1/2" A307 U.N., LENGTH AS SHOWN
USE 1/2" A325 BOLTS AT SFB FLANGE BRACES
FLANGE BRACE AT INT. SIDE ONLY ON END FRAMES

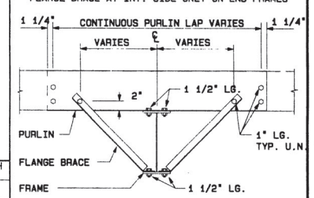

NOTICE
TO ASSURE STRUCTURAL INTEGRITY, INSTALL FLANGE BRACES AND CONNECTION BOLTS AT ALL LOCATIONS SHOWN ON DRAWINGS.

TYPICAL CONNECTIONS
PURLIN, PURLIN LAP & FLANGE BRACE AT FRAME

FOR INFORMATION ONLY

MEM NO	FLANGE T X W	WEB THK	DEPTH (IN) START/END	LENGTH (FT)
1	1/4 X 5.0	3/16	12.00/32.00	17.6
2	1/4 X 5.0	3/16	30.00/10.00	14.5
3	3/16 X 5.0	1/8	10.00/16.00	15.0
4	3/16 X 5.0	1/8	16.00/10.00	15.0
5	1/4 X 5.0	3/16	10.00/30.00	14.5
6	1/4 X 5.0	3/16	32.00/12.00	17.6

FRAME CLEARANCES

CLEAR UNDER HAUNCH AT COLUMN LINE " A "	= 15'-5
CLEAR UNDER HAUNCH AT COLUMN LINE " D "	= 15'-5
CLEAR DISTANCE BETWEEN KNEES AT HAUNCH	= 53'-3
CLEAR UNDER FRAME AT THE RIDGE	= 19'-11 3/8

GENERAL NOTES
1. A325 HIGH STRENGTH BOLTS SHALL BE TIGHTENED IN ACCORDANCE WITH THE "SPECIFICATION FOR STRUCTURAL JOINTS USING ASTM A325 OR A490 BOLTS" SECTION 5(C) "TURN-OF-NUT TIGHTENING".
2. USE 1/2" DIA. A307 BOLTS FOR PURLIN TO FRAME, GIRT TO FRAME, AND GIRT TO CLIP CONNECTIONS UNLESS NOTED OTHERWISE. SEE JOB DETAILS FOR BOLT LENGTHS.
3. INSTALLATION OF ADEQUATE TEMPORARY BRACING FOR USE UNTIL CONSTRUCTION IS COMPLETE. IS THE RESPONSIBILITY OF THE ERECTOR.

THIS DRAWING, INCLUDING THE INFORMATION HEREON, REMAINS THE PROPERTY OF VARCO-PRUDEN BUILDINGS, A UNITED DOMINION COMPANY.
IT IS PROVIDED SOLELY FOR ERECTING THE BUILDING DESCRIBED IN THE APPLICABLE PURCHASE ORDER AND SHALL NOT BE MODIFIED, REPRODUCED OR USED FOR ANY OTHER PURPOSE WITHOUT PRIOR WRITTEN APPROVAL OF VARCO-PRUDEN BUILDINGS.

THE GENERAL CONTRACTOR AND/OR ERECTOR IS SOLELY RESPONSIBLE FOR ACCURATE, GOOD QUALITY WORKMANSHIP IN ERECTING THIS BUILDING IN CONFORMANCE WITH THIS DRAWING, DETAILS REFERENCED IN THIS DRAWING, ALL APPLICABLE VARCO-PRUDEN ERECTION GUIDES, AND INDUSTRY STANDARDS PERTAINING TO PROPER ERECTION, INCLUDING THE CORRECT USE OF TEMPORARY BRACING.

FRAME CROSS SECTION N3672

BUILDER: ARIZONA BUILDING SYSTEMS
CUSTOMER: BUREAU OF RECLAMATION
LOCATION: PAGE, ARIZONA

DATE: 11/12/92
SCALE: N.T.S.

REV	DATE	BY	DESCRIPTION
1	11/17	ATA	ADDITIONAL GIRT FOR WINDOWS

VARCO-PRUDEN BUILDINGS
A United Dominion Company

MBMA
METAL BUILDING MANUFACTURERS ASSOCIATION

J. H. SMITH 11-13

THIS DRAWING IS SEALED ONLY AS TO THE COMPONENTS FURNISHED BY VARCO-PRUDEN

JOB NO. 49347
DR.BY ATA
CK.BY
DRAWING 4 OF

A

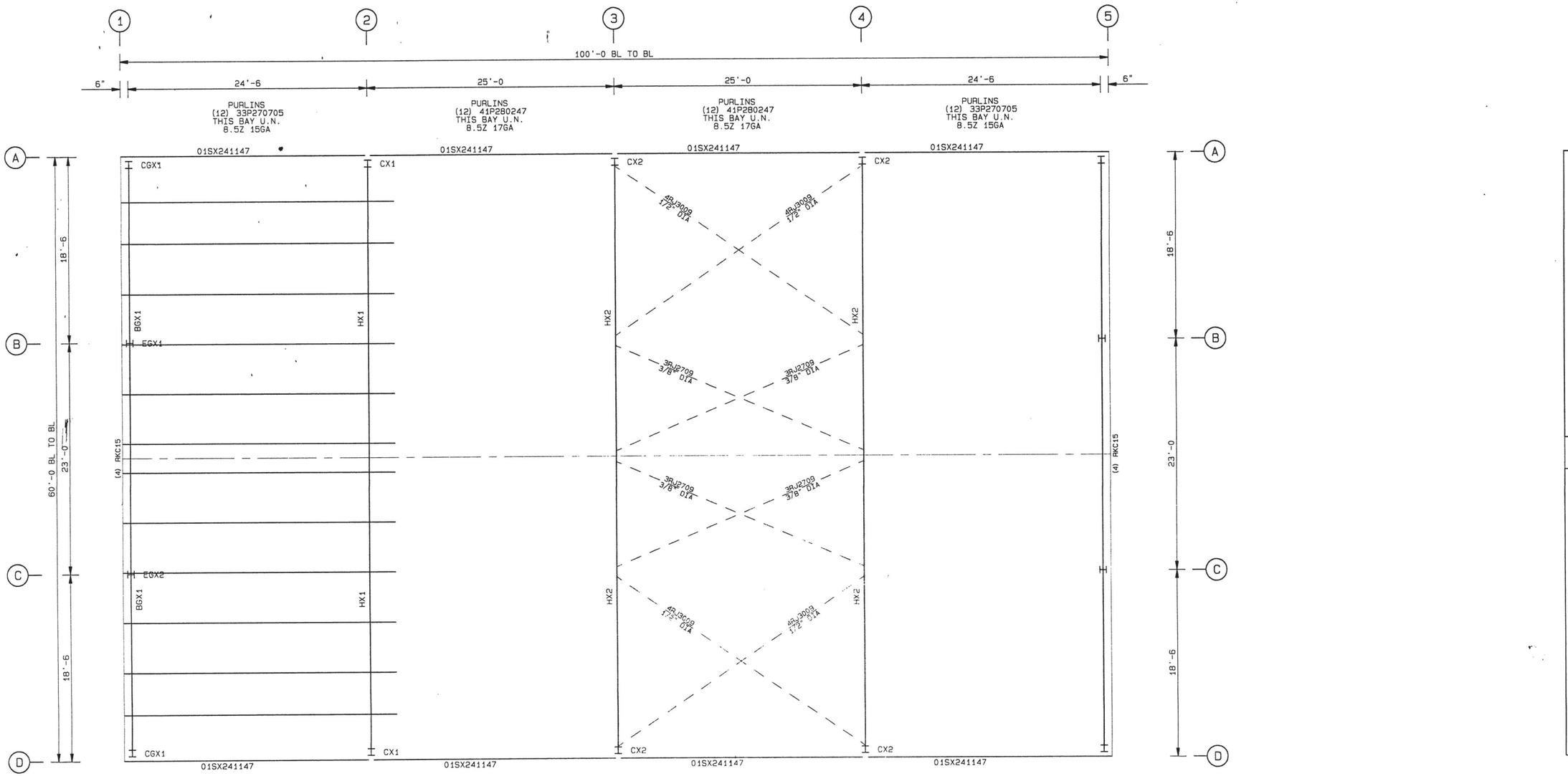

ROOF FRAMING PLAN

SPECIAL NOTE:
1. PRE-DRILLING 1/8" DIAMETER HOLES FOR ROOF STRUCTURAL FASTENERS MAY BE REQUIRED AT 11 GAGE PURLINS, NESTED PURLINS, PURLIN LAP LOCATIONS, AND/OR SECONDARY STRUCTURAL BEAMS.

FOR INFORMATION ONLY

GENERAL NOTES
1. UNLESS NOTED, USE 1/2" DIAMETER A-307 BOLTS FOR PURLIN LAP, PURLIN TO FRAME, FLANGE BRACE TO FRAME, AND FLANGE BRACE TO PURLIN CONNECTIONS. SEE JOB DETAILS FOR BOLT LENGTHS.
2. ROOF SHEETS ARE AN INTEGRAL PART OF THE STRUCTURAL SYSTEM. REMOVAL OR ALTERATION WITHOUT PRIOR AUTHORIZATION IS PROHIBITED.
3. WIND, FLANGE, AND PURLIN BRACING ARE AN INTEGRAL PART OF THE ROOF STRUCTURAL SYSTEM AND SHOULD BE PROPERLY INSTALLED PRIOR TO ERECTION OF WALL AND ROOF SHEETS. REMOVAL OR ALTERATION OF ROOF BRACING WITHOUT PRIOR AUTHORIZATION IS PROHIBITED.
4. SEE JOB DETAILS FOR SHEETING AND TRIM FASTENER SPECIFICATION.
5. WHEN SAG ANGLE SLOTS IN ADJACENT PURLINS DO NOT ALIGN OR ARE OMMITED, FIELD-BEND A SAG ANGLE TAB AND ATTACH TO PURLIN WITH A SELF-DRILLING STRUCTURAL FASTENER.

FIELD LOCATED ACCESSORIES
QTY MARK NO. DESCRIPTION

THIS DRAWING, INCLUDING THE INFORMATION HEREON, REMAINS THE PROPERTY OF VARCO-PRUDEN BUILDINGS, A UNITED DOMINION COMPANY. IT IS PROVIDED SOLELY FOR ERECTING THE BUILDING DESCRIBED IN THE APPLICABLE PURCHASE ORDER AND SHALL NOT BE MODIFIED, REPRODUCED OR USED FOR ANY OTHER PURPOSE WITHOUT PRIOR WRITTEN APPROVAL OF VARCO-PRUDEN BUILDINGS.

THE GENERAL CONTRACTOR AND/OR ERECTOR IS SOLELY RESPONSIBLE FOR ACCURATE, GOOD QUALITY WORKMANSHIP IN ERECTING THIS BUILDING IN CONFORMANCE WITH THIS DRAWING. DETAILS REFERENCED IN THIS DRAWING, ALL APPLICABLE VARCO-PRUDEN ERECTION GUIDES, AND INDUSTRY STANDARDS PERTAINING TO PROPER ERECTION, INCLUDING THE CORRECT USE OF TEMPORARY BRACING.

ROOF PLAN M2673

BUILDER: ARIZONA BUILDING SYSTEMS
CUSTOMER: BUREAU OF RECLAMATION
LOCATION: PAGE, ARIZONA

DATE: 11/ 3/92
APPRX. SCALE: 3/16"=1'

REV	DATE	BY	DESCRIPTION

VARCO-PRUDEN BUILDINGS
A United Dominion Company

MBMA METAL BUILDING MANUFACTURERS ASSOCIATION

22132 J. H. SMITH REGISTERED PROFESSIONAL ENGINEER ARIZONA, U.S.A.

THIS DRAWING IS SEALED ONLY AS TO THE COMPONENTS FURNISHED BY VARCO-PRUDEN

JOB NO. 49347
DR.BY MDR | CK.BY
DRAWING 5 OF

A

P.C.: CA CODER: ATA CHECKER: RUN: 11/ 3/92 11:13

DIMENSIONS
1 1'-6 3/4
2 1'-0

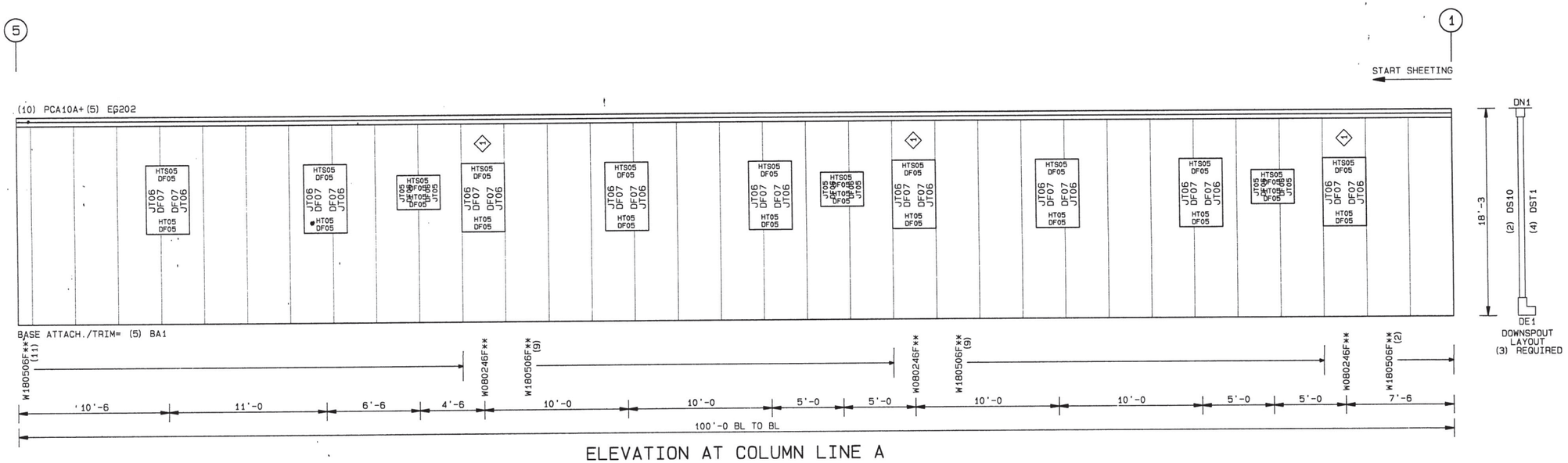

ELEVATION AT COLUMN LINE A

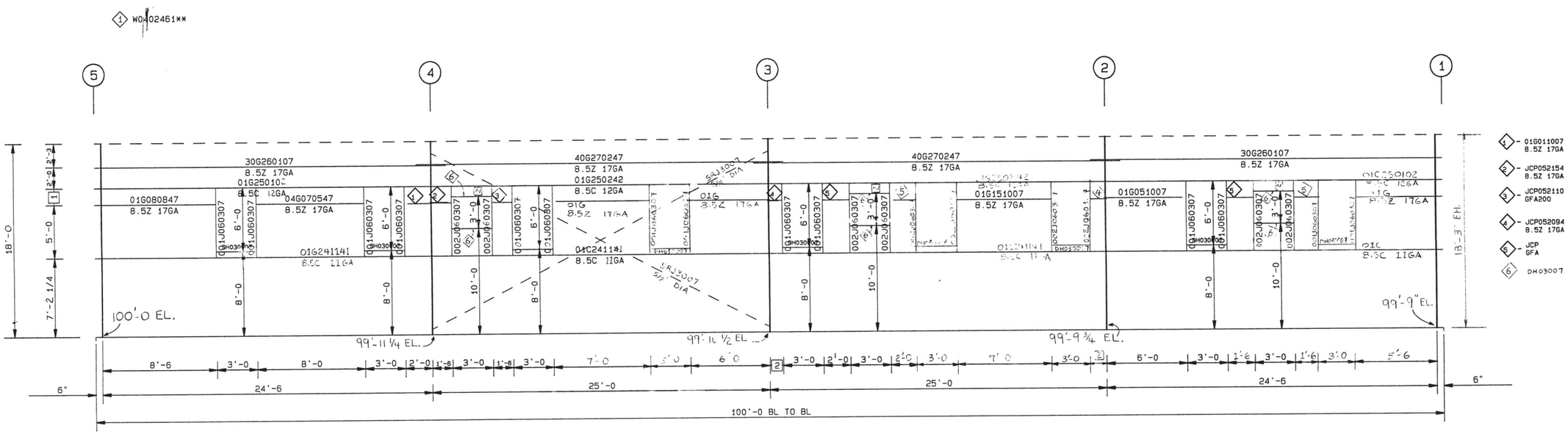

ELEVATION AT COLUMN LINE A

PLEASE VERIFY LOCATION OF ALL FRAME OPENINGS.

FOR INFORMATION ONLY

GENERAL NOTES
1. USE 1/2" DIAMETER A-307 BOLTS FOR ALL GIRT, JAMB, AND HEADER CONNECTIONS. SEE JOB DETAILS FOR BOLT LENGTHS.
2. SEE JOB DETAILS FOR SHEETING AND TRIM FASTENER SPECIFICATIONS.
3. WALL SHEETS ARE AN INTEGRAL PART OF THE STRUCTURAL SYSTEM. REMOVAL OR ALTERATION WITHOUT PRIOR AUTHORIZATION IS PROHIBITED.
4. WIND AND FLANGE BRACING ARE AN INTEGRAL PART OF THE WALL STRUCTURAL SYSTEM AND SHOULD BE PROPERLY INSTALLED PRIOR TO ERECTION OF WALL AND ROOF SHEETS. REMOVAL OR ALTERATION OF WALL BRACING WITHOUT PRIOR AUTHORIZATION IS PROHIBITED.
5. PRE-DRILLING 1/8" HOLES FOR WALL STRUCTURAL FASTENERS MAY BE REQUIRED AT 11 GAGE GIRTS, NESTED GIRTS, GIRT LAP LOCATIONS, AND/OR SECONDARY STRUCTURAL BEAMS.

FIELD LOCATED ACCESSORIES

QTY	MARK NO.	DESCRIPTION

THIS DRAWING, INCLUDING THE INFORMATION HEREON, REMAINS THE PROPERTY OF VARCO-PRUDEN BUILDINGS, A UNITED DOMINION COMPANY. IT IS PROVIDED SOLELY FOR ERECTING THE BUILDING DESCRIBED IN THE APPLICABLE PURCHASE ORDER AND SHALL NOT BE MODIFIED, REPRODUCED OR USED FOR ANY OTHER PURPOSE WITHOUT PRIOR WRITTEN APPROVAL OF VARCO-PRUDEN BUILDINGS.

THE GENERAL CONTRACTOR AND/OR ERECTOR IS SOLELY RESPONSIBLE FOR ACCURATE, GOOD QUALITY WORKMANSHIP IN ERECTING THIS BUILDING IN CONFORMANCE WITH THIS DRAWING. DETAILS REFERENCED IN THIS DRAWING, ALL APPLICABLE VARCO-PRUDEN ERECTION GUIDES, AND INDUSTRY STANDARDS PERTAINING TO PROPER ERECTION, INCLUDING THE CORRECT USE OF TEMPORARY BRACING.

SIDEWALL ELEVATION

M2674

BUILDER	CUSTOMER	LOCATION
ARIZONA BUILDING SYSTEMS	BUREAU OF RECLAMATION	PAGE, ARIZONA

DATE	REV	DATE	BY	DESCRIPTION
11/13/92	4	11/17	ATA	SHOWED F.O'S
SCALE N.T.S.				

VARCO-PRUDEN BUILDINGS
A United Dominion Company

MBMA
METAL BUILDING MANUFACTURERS ASSOCIATION

22132 J.H. SMITH 11.13.92

THIS DRAWING IS SEALED ONLY AS TO THE COMPONENTS FURNISHED BY VARCO-PRUDEN

JOB NO. 49347
DR.BY ATA
CK.BY
DRAWING 6 OF

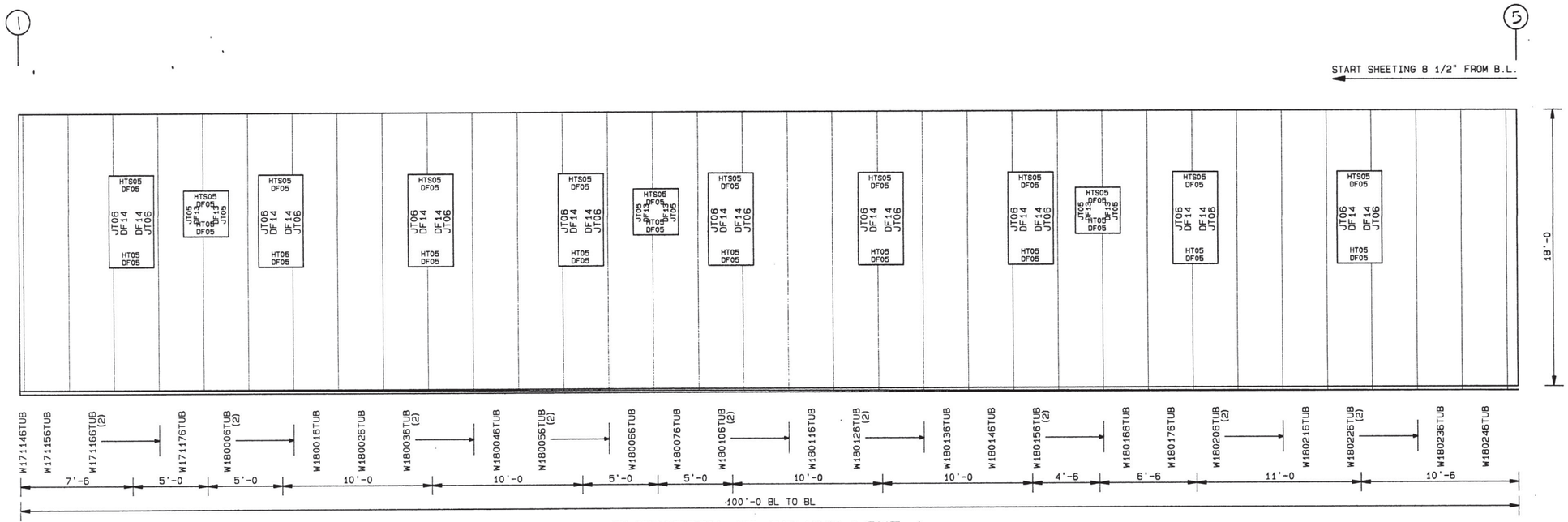

ELEVATION AT COLUMN LINE A

LINER SHEETING

FOR INFORMATION ONLY

GENERAL NOTES
1. USE 1/2" DIAMETER A-307 BOLTS FOR ALL GIRT, JAMB, AND HEADER CONNECTIONS. SEE JOB DETAILS FOR BOLT LENGTHS.
2. SEE JOB DETAILS FOR SHEETING AND TRIM FASTENER SPECIFICATIONS.
3. WALL SHEETS ARE AN INTEGRAL PART OF THE STRUCTURAL SYSTEM. REMOVAL OR ALTERATION WITHOUT PRIOR AUTHORIZATION IS PROHIBITED.
4. WIND AND FLANGE BRACING ARE AN INTEGRAL PART OF THE WALL STRUCTURAL SYSTEM AND SHOULD BE PROPERLY INSTALLED PRIOR TO ERECTION OF WALL AND ROOF SHEETS. REMOVAL OR ALTERATION OF WALL BRACING WITHOUT PRIOR AUTHORIZATION IS PROHIBITED.
5. PRE-DRILLING 1/8" HOLES FOR WALL STRUCTURAL FASTENERS MAY BE REQUIRED AT 11 GAGE GIRTS, NESTED GIRTS, GIRT LAP LOCATIONS, AND/OR SECONDARY STRUCTURAL BEAMS.

FIELD LOCATED ACCESSORIES

QTY	MARK NO.	DESCRIPTION

THIS DRAWING, INCLUDING THE INFORMATION HEREON, REMAINS THE PROPERTY OF VARCO-PRUDEN BUILDINGS, A UNITED DOMINION COMPANY. IT IS PROVIDED SOLELY FOR ERECTING THE BUILDING DESCRIBED IN THE APPLICABLE PURCHASE ORDER AND SHALL NOT BE MODIFIED, REPRODUCED OR USED FOR ANY OTHER PURPOSE WITHOUT PRIOR WRITTEN APPROVAL OF VARCO-PRUDEN BUILDINGS.

THE GENERAL CONTRACTOR AND/OR ERECTOR IS SOLELY RESPONSIBLE FOR ACCURATE, GOOD QUALITY WORKMANSHIP IN ERECTING THIS BUILDING IN CONFORMANCE WITH THIS DRAWING. DETAILS REFERENCED IN THIS DRAWING, ALL APPLICABLE VARCO-PRUDEN ERECTION GUIDES, AND INDUSTRY STANDARDS PERTAINING TO PROPER ERECTION, INCLUDING THE CORRECT USE OF TEMPORARY BRACING.

SIDEWALL ELEVATION 2675

BUILDER: ARIZONA BUILDING SYSTEMS
CUSTOMER: BUREAU OF RECLAMATION
LOCATION: PAGE, ARIZONA

DATE: 11/12/92
APPRX. SCALE: 1/4 "=1'

REV	DATE	BY	DESCRIPTION
1	11/11	ATA	ADDED WINDOWS

VARCO-PRUDEN BUILDINGS
A United Dominion Company

MBMA METAL BUILDING MANUFACTURERS ASSOCIATION

22132 J. H. SMITH Date Signed 11/13/92

THIS DRAWING IS SEALED ONLY AS TO THE COMPONENTS FURNISHED BY VARCO-PRUDEN

AFW

JOB NO. 49347
DR.BY ATA
CK.BY
DRAWING 7 OF

DIMENSIONS
[1] 1'-0
[2] 1'-6 3/4
[3] 1'-6

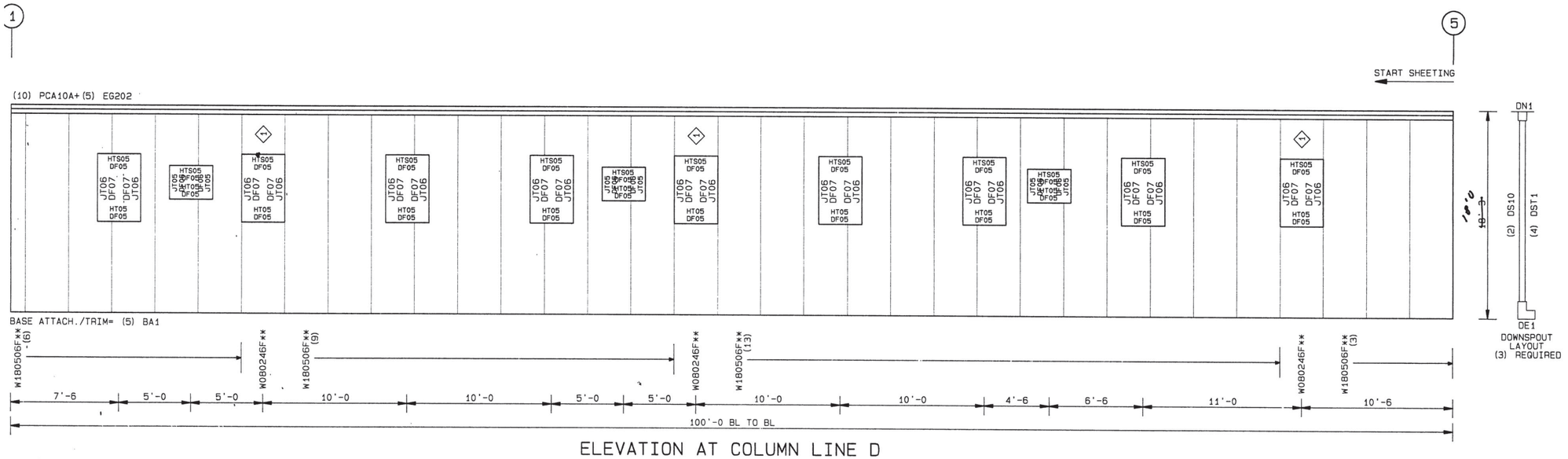

ELEVATION AT COLUMN LINE D

◇1 W0402461**

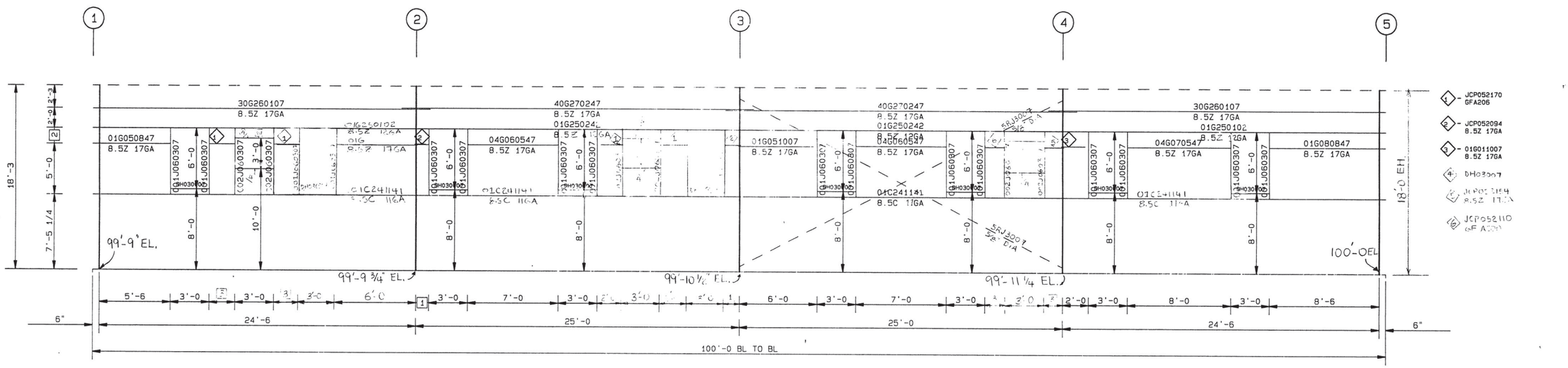

ELEVATION AT COLUMN LINE D

FOR INFORMATION ONLY

GENERAL NOTES

1. USE 1/2" DIAMETER A-307 BOLTS FOR ALL GIRT, JAMB, AND HEADER CONNECTIONS. SEE JOB DETAILS FOR BOLT LENGTHS.
2. SEE JOB DETAILS FOR SHEETING AND TRIM FASTENER SPECIFICATIONS.
3. WALL SHEETS ARE AN INTEGRAL PART OF THE STRUCTURAL SYSTEM. REMOVAL OR ALTERATION WITHOUT PRIOR AUTHORIZATION IS PROHIBITED.
4. WIND AND FLANGE BRACING ARE AN INTEGRAL PART OF THE WALL STRUCTURAL SYSTEM AND SHOULD BE PROPERLY INSTALLED PRIOR TO ERECTION OF WALL AND ROOF SHEETS. REMOVAL OR ALTERATION OF WALL BRACING WITHOUT PRIOR AUTHORIZATION IS PROHIBITED.
5. PRE-DRILLING 1/8" HOLES FOR WALL STRUCTURAL FASTENERS MAY BE REQUIRED AT 11 GAGE GIRTS, NESTED GIRTS, GIRT LAP LOCATIONS, AND/OR SECONDARY STRUCTURAL BEAMS.

FIELD LOCATED ACCESSORIES

QTY	MARK NO.	DESCRIPTION

THIS DRAWING, INCLUDING THE INFORMATION HEREON, REMAINS THE PROPERTY OF VARCO-PRUDEN BUILDINGS, A UNITED DOMINION COMPANY. IT IS PROVIDED SOLELY FOR ERECTING THE BUILDING DESCRIBED IN THE APPLICABLE PURCHASE ORDER AND SHALL NOT BE MODIFIED, REPRODUCED OR USED FOR ANY OTHER PURPOSE WITHOUT PRIOR WRITTEN APPROVAL OF VARCO-PRUDEN BUILDINGS.

THE GENERAL CONTRACTOR AND/OR ERECTOR IS SOLELY RESPONSIBLE FOR ACCURATE, GOOD QUALITY WORKMANSHIP IN ERECTING THIS BUILDING IN CONFORMANCE WITH THIS DRAWING. DETAILS REFERENCED IN THIS DRAWING, ALL APPLICABLE VARCO-PRUDEN ERECTION GUIDES, AND INDUSTRY STANDARDS PERTAINING TO PROPER ERECTION, INCLUDING THE CORRECT USE OF TEMPORARY BRACING.

SIDEWALL ELEVATION M2676

BUILDER	CUSTOMER	LOCATION
ARIZONA BUILDING SYSTEMS	BUREAU OF RECLAMATION	PAGE, ARIZONA

DATE	REV	DATE	BY	DESCRIPTION
11/13/92	A	11/17	AJP	SHOWED F.O.S

SCALE N.T.S.

VARCO-PRUDEN BUILDINGS
A United Dominion Company

MBMA METAL BUILDING MANUFACTURERS ASSOCIATION

THIS DRAWING IS SEALED ONLY AS TO THE COMPONENTS FURNISHED BY VARCO-PRUDEN

A

JOB NO. 49347
DR. BY ATA
CK BY
DRAWING 8 OF

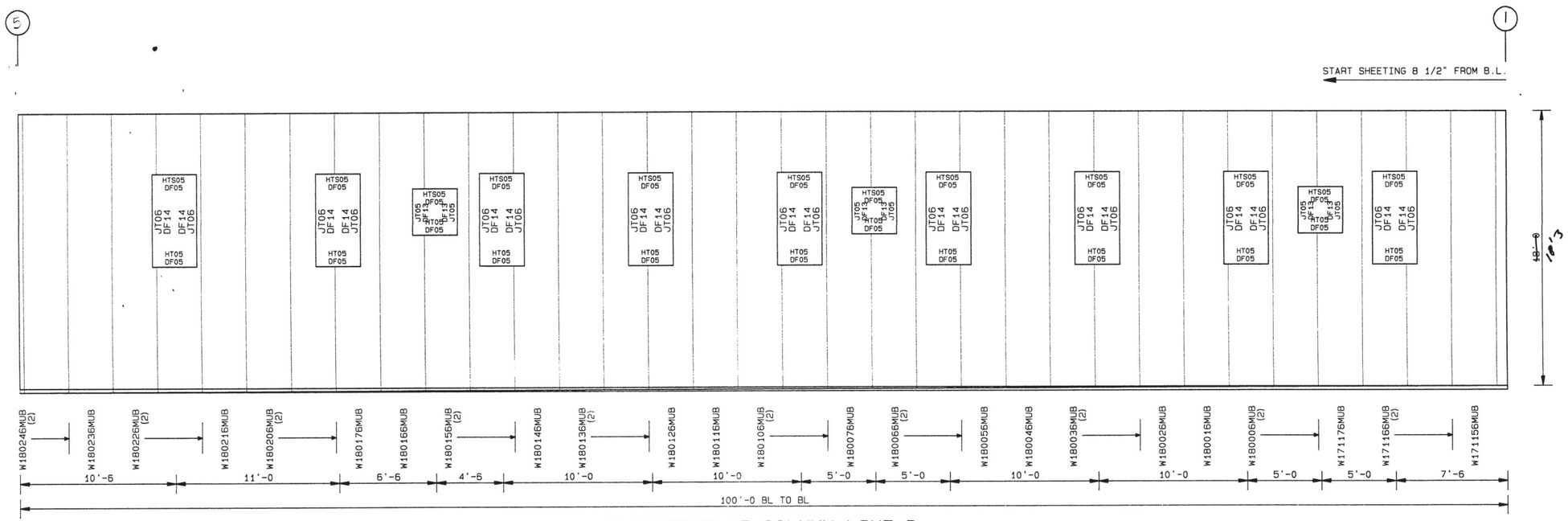

ELEVATION AT COLUMN LINE D

FOR INFORMATION ONLY

GENERAL NOTES
1. USE 1/2" DIAMETER A-307 BOLTS FOR ALL GIRT, JAMB, AND HEADER CONNECTIONS. SEE JOB DETAILS FOR BOLT LENGTHS.
2. SEE JOB DETAILS FOR SHEETING AND TRIM FASTENER SPECIFICATIONS.
3. WALL SHEETS ARE AN INTEGRAL PART OF THE STRUCTURAL SYSTEM. REMOVAL OR ALTERATION WITHOUT PRIOR AUTHORIZATION IS PROHIBITED.
4. WIND AND FLANGE BRACING ARE AN INTEGRAL PART OF THE WALL STRUCTURAL SYSTEM AND SHOULD BE PROPERLY INSTALLED PRIOR TO ERECTION OF WALL AND ROOF SHEETS. REMOVAL OR ALTERATION OF WALL BRACING WITHOUT PRIOR AUTHORIZATION IS PROHIBITED.
5. PRE-DRILLING 1/8" HOLES FOR WALL STRUCTURAL FASTENERS MAY BE REQUIRED AT 11 GAGE GIRTS, NESTED GIRTS, GIRT LAP LOCATIONS, AND/OR SECONDARY STRUCTURAL BEAMS.

FIELD LOCATED ACCESSORIES

QTY	MARK NO.	DESCRIPTION

THIS DRAWING, INCLUDING THE INFORMATION HEREON, REMAINS THE PROPERTY OF VARCO-PRUDEN BUILDINGS, A UNITED DOMINION COMPANY. IT IS PROVIDED SOLELY FOR ERECTING THE BUILDING DESCRIBED IN THE APPLICABLE PURCHASE ORDER AND SHALL NOT BE MODIFIED, REPRODUCED OR USED FOR ANY OTHER PURPOSE WITHOUT PRIOR WRITTEN APPROVAL OF VARCO-PRUDEN BUILDINGS.

THE GENERAL CONTRACTOR AND/OR ERECTOR IS SOLELY RESPONSIBLE FOR ACCURATE, GOOD QUALITY WORKMANSHIP IN ERECTING THIS BUILDING IN CONFORMANCE WITH THIS DRAWING, DETAILS REFERENCED IN THIS DRAWING, ALL APPLICABLE VARCO-PRUDEN ERECTION GUIDES, AND INDUSTRY STANDARDS PERTAINING TO PROPER ERECTION, INCLUDING THE CORRECT USE OF TEMPORARY BRACING.

SIDEWALL ELEVATION M2677

BUILDER	CUSTOMER	LOCATION
ARIZONA BUILDING SYSTEMS	BUREAU OF RECLAMATION	PAGE, ARIZONA

DATE	REV	DATE	BY	DESCRIPTION
11/12/92	1	11/12	ATA	ADDED WINDOWS
APPRX. SCALE 1/4 "=1'				

VARCO-PRUDEN BUILDINGS
A United Dominion Company

MBMA
METAL BUILDING MANUFACTURERS ASSOCIATION

22137 J. H. SMITH 11-13-92

THIS DRAWING IS SEALED ONLY AS TO THE COMPONENTS FURNISHED BY VARCO-PRUDEN

REW

JOB NO. 49347
DR.BY ATA
CK.BY
DRAWING 9 OF

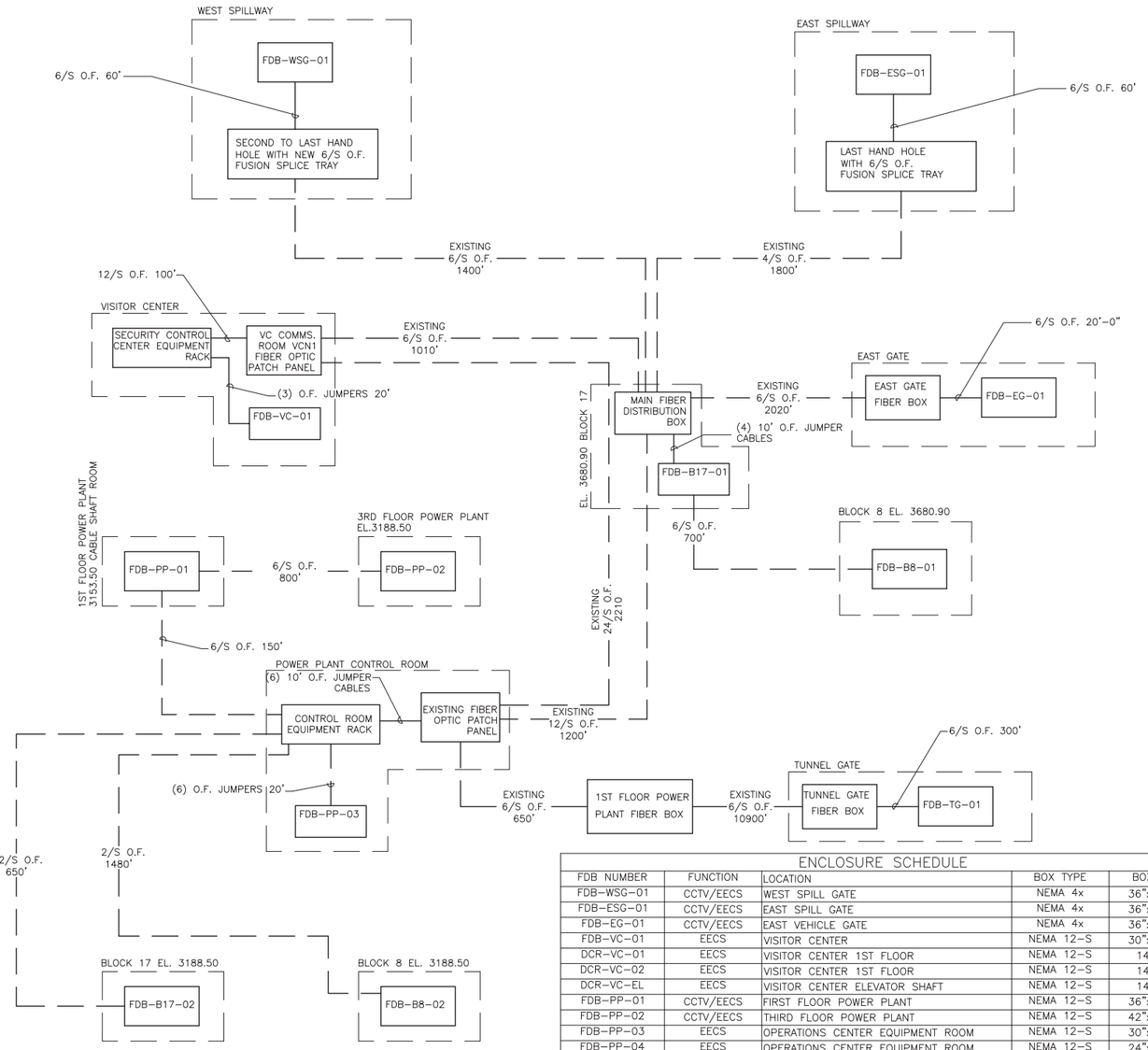

A OPTICAL FIBER ONE LINE DIAGRAM
SCALE: NO SCALE

KEYED NOTES:

1. 6/S O.F., EXCESS FIBERS NOT TERMINATED.

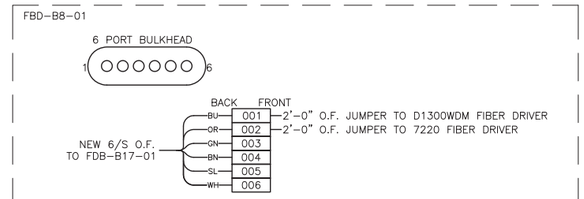

B BLOCK 8 EL. 3680.90 FIBER INTERCONNECT
SCALE: NO SCALE

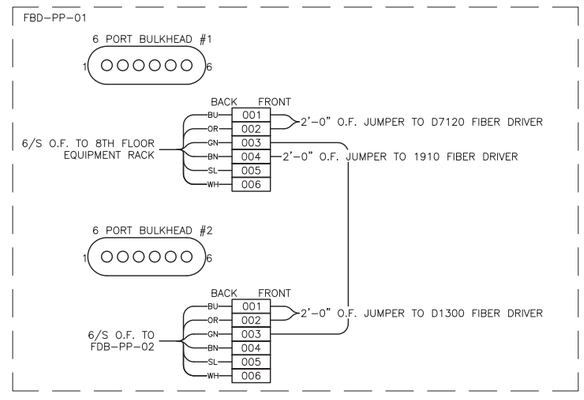

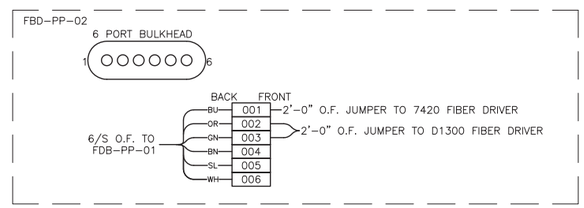

C LOWER POWER PLANT FIBER INTERCONNECT
SCALE: NO SCALE

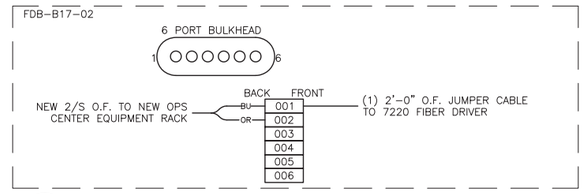

D BLOCK 8 EL. 3188.50 FIBER INTERCONNECT
SCALE: NO SCALE

ENCLOSURE SCHEDULE

FDB NUMBER	FUNCTION	LOCATION	BOX TYPE	BOX SIZE
FDB-WSG-01	CCTV/EECS	WEST SPILL GATE	NEMA 4x	36"x30"x8"
FDB-ESG-01	CCTV/EECS	EAST SPILL GATE	NEMA 4x	36"x30"x8"
FDB-EG-01	CCTV/EECS	EAST VEHICLE GATE	NEMA 4x	36"x30"x8"
FDB-VC-01	EECS	VISITOR CENTER	NEMA 12-S	30"x30"x8"
DCR-VC-01	EECS	VISITOR CENTER 1ST FLOOR	NEMA 12-S	14"x12"
DCR-VC-02	EECS	VISITOR CENTER 1ST FLOOR	NEMA 12-S	14"x12"
DCR-VC-EL	EECS	VISITOR CENTER ELEVATOR SHAFT	NEMA 12-S	14"x12"
FDB-PP-01	CCTV/EECS	FIRST FLOOR POWER PLANT	NEMA 12-S	36"x30"x8"
FDB-PP-02	CCTV/EECS	THIRD FLOOR POWER PLANT	NEMA 12-S	42"x36"x8"
FDB-PP-03	EECS	OPERATIONS CENTER EQUIPMENT ROOM	NEMA 12-S	30"x30"x8"
FDB-PP-04	EECS	OPERATIONS CENTER EQUIPMENT ROOM	NEMA 12-S	24"x20"x8"
DCR-PP-3.3	EECS	POWER PLANT MACHINE SHOP	NEMA 12-S	14"x12"
DCR-PP-8.1	EECS	POWER PLANT 8TH FLOOR HALLWAY	NEMA 12-S	14"x12"
DCR-PP-8.2	EECS	POWER PLANT 8TH FLOOR HALLWAY	NEMA 12-S	14"x12"
DCR-PP-9.1	EECS	POWER PLANT 9TH FLOOR HALLWAY	NEMA 12-S	14"x12"
DCR-PP-EL	EECS	POWER PLANT ELEVATOR SHAFT	NEMA 12-S	14"x12"
FDB-B17-01	CCTV/EECS	BLOCK 17 (ELEV. 3680.90)	NEMA 12-S	48"x36"x8"
FDB-B17-02	CCTV/EECS	BLOCK 17 (ELEV. 3188.50)	NEMA 12-S	30"x30"x8"
DCR-B17-01	EECS	BLOCK 17 (ELEV. 3715.90)	NEMA 12-S	14"x12"
DCR-B17-02	EECS	BLOCK 17 (ELEV. 3480.90)	NEMA 12-S	14"x12"
DCR-B17-03	EECS	BLOCK 17 (ELEV. 26 GALLERY, EL. 3697.50)	NEMA 12-S	14"x12"
FDB-B8-01	CCTV/EECS	BLOCK 8 (ELEV. 3680.90)	NEMA 12-S	30"x30"x8"
FDB-B8-02	CCTV/EECS	BLOCK 8 (ELEV. 3188.50)	NEMA 12-S	30"x30"x8"
DCR-B8-01	EECS	BLOCK 8 (ELEV. 3715.90)	NEMA 12-S	14"x12"
DCR-B8-02	EECS	BLOCK 8 (ELEV. 3480.00)	NEMA 12-S	14"x12"
FDB-TG-01	CCTV/EECS	UPPER TUNNEL GATE PORTAL	NEMA 4x	36"x30"x8"
FDB-WH-01	EECS	WAREHOUSE	NEMA 12-S	36"x30"x8"
DCR-WH-01	EECS	WAREHOUSE, CAGED STORAGE	NEMA 12-S	14"x12"
DCR-WH-02	EECS	WAREHOUSE, PARTS STORAGE	NEMA 12-S	14"x12"
DCR-WH-04	EECS	WAREHOUSE, VEHICLE STORAGE	NEMA 12-S	14"x12"
DCR-WH-05	EECS	WAREHOUSE, WOOD SHOP	NEMA 12-S	14"x12"
FDB-WG-01	CCTV/EECS	WEST GATE ENTRANCE	NEMA 4x	30"x48"x10"

FOR INFORMATION ONLY

REV.	DESCRIPTION	INITIAL	DATE
1	FIBER CALLOUT REVISIONS	WL	3/22/06

***** NOTICE *****
INFORMATION ON THIS DOCUMENT IS PROPRIETARY AND SHALL NOT BE USED, COPIED, REPRODUCED OR DISCLOSED IN WHOLE OR IN PART WITHOUT WRITTEN CONSENT OF ADESTA, LLC.

ADESTA
1200 LANDMARK CENTER, SUITE 1300
OMAHA, NEBRASKA 68102

Designed by: WL
Drawn by: BM
Approved by: PM

GLEN CANYON DAM & POWER PLANT
ELECTRONIC SECURITY SYSTEM UPGRADE
FIBER ONE-LINE DIAGRAM & INTERCONNECT AND ENCLOSURE SCHEDULE

Job Number: 103032 | Date: 3/31/06 | Scale: NO SCALE | Sheet: E6.06

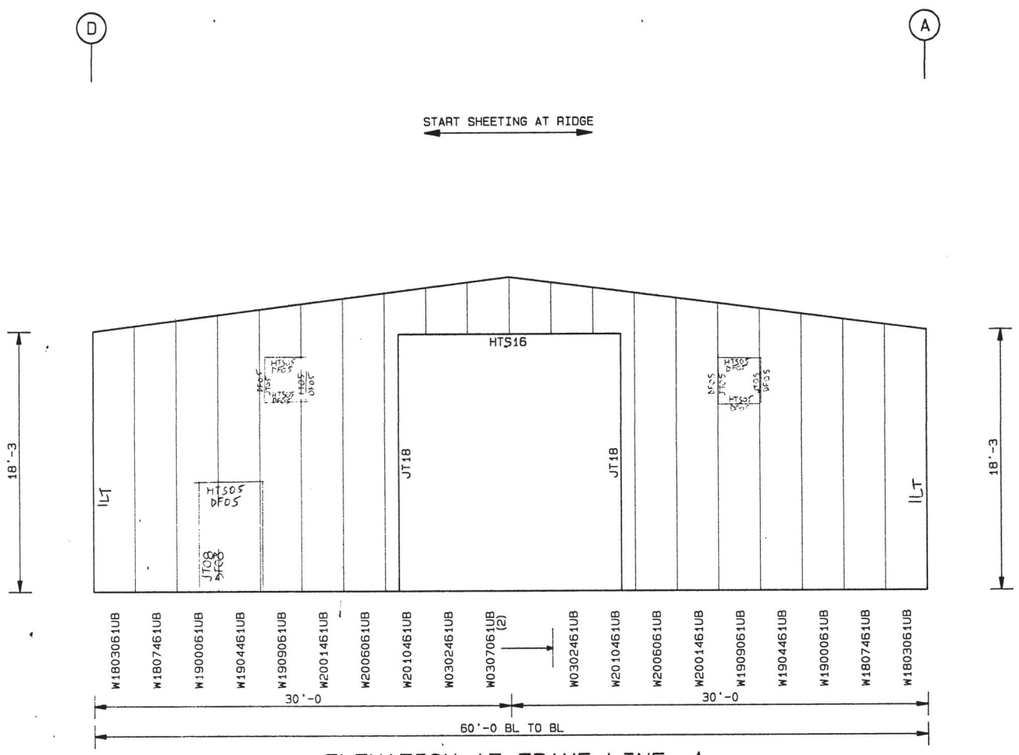

ELEVATION AT FRAME LINE 1

LINER SHEETING

FOR INFORMATION ONLY

GENERAL NOTES
1. A325 HIGH STRENGTH BOLTS SHALL BE TIGHTENED IN ACCORDANCE WITH THE "SPECIFICATION FOR STRUCTURAL JOINTS USING ASTM A325 OR A490 BOLTS" SECTION 5(C) "TURN-OF-NUT TIGHTENING".
2. USE 1/2" DIA. A-307 BOLTS FOR ALL GIRT, JAMB & HEADER CONN. SEE JOB DETAILS FOR BOLT LENGTH.
3. SEE JOB DETAILS FOR SHEETING AND TRIM FASTENER SPECIFICATIONS.
4. WALL SHEETS ARE AN INTEGRAL PART OF THE STRUCTURAL SYSTEM. REMOVAL OR ALTERATION WITHOUT PRIOR AUTHORIZATION IS PROHIBITED.
5. PRE-DRILLING 1/8" HOLES FOR WALL STRUCTURAL FASTENERS MAY BE REQUIRED AT 11 GAGE GIRTS, NESTED GIRTS, GIRT LAP LOCATIONS, AND/OR SECONDARY STRUCTURAL BEAMS.
6. FLANGE BRACE LOCATIONS ARE SHOWN BY "X". FLANGE BRACE PART MARKS (GFB___) ARE SHOWN WITH POST AND RAKE BEAM PART MARKS. BEAM FLANGE BRACES ONE SIDE, POST FLANGE BRACES BOTH SIDES.

FIELD LOCATED ACCESSORIES

QTY	MARK NO.	DESCRIPTION

THIS DRAWING, INCLUDING THE INFORMATION HEREON, REMAINS THE PROPERTY OF VARCO-PRUDEN BUILDINGS, A UNITED DOMINION COMPANY. IT IS PROVIDED SOLELY FOR ERECTING THE BUILDING DESCRIBED IN THE APPLICABLE PURCHASE ORDER AND SHALL NOT BE MODIFIED, REPRODUCED OR USED FOR ANY OTHER PURPOSE WITHOUT PRIOR WRITTEN APPROVAL OF VARCO-PRUDEN BUILDINGS.

THE GENERAL CONTRACTOR AND/OR ERECTOR IS SOLELY RESPONSIBLE FOR ACCURATE, GOOD QUALITY WORKMANSHIP IN ERECTING THIS BUILDING IN CONFORMANCE WITH THIS DRAWING, DETAILS REFERENCED IN THIS DRAWING, ALL APPLICABLE VARCO-PRUDEN ERECTION GUIDES, AND INDUSTRY STANDARDS PERTAINING TO PROPER ERECTION, INCLUDING THE CORRECT USE OF TEMPORARY BRACING.

ENDWALL ELEVATION M2479

BUILDER	CUSTOMER	LOCATION
ARIZONA BUILDING SYSTEMS	BUREAU OF RECLAMATION	PAGE, ARIZONA

DATE	REV	DATE	BY	DESCRIPTION
11/ 6/92	1	11/17	ATH	SHOWED F.O'S
APPRX. SCALE 3/16"=1'				

VARCO-PRUDEN BUILDINGS
A United Dominion Company

MBMA
METAL BUILDING MANUFACTURERS ASSOCIATION

Registered Professional Engineer (Civil)
CERTIFICATE NO. 22132
J. H. SMITH
Date Signed 11-6-92
ARIZONA, U.S.A.

THIS DRAWING IS SEALED ONLY AS TO THE COMPONENTS FURNISHED BY VARCO-PRUDEN

JOB NO. 49347
DR. BY MDR
CK. BY
DRAWING 11 OF

A

DIMENSIONS
[1] 3'-10 3/16
[2] 1'-7 1/16

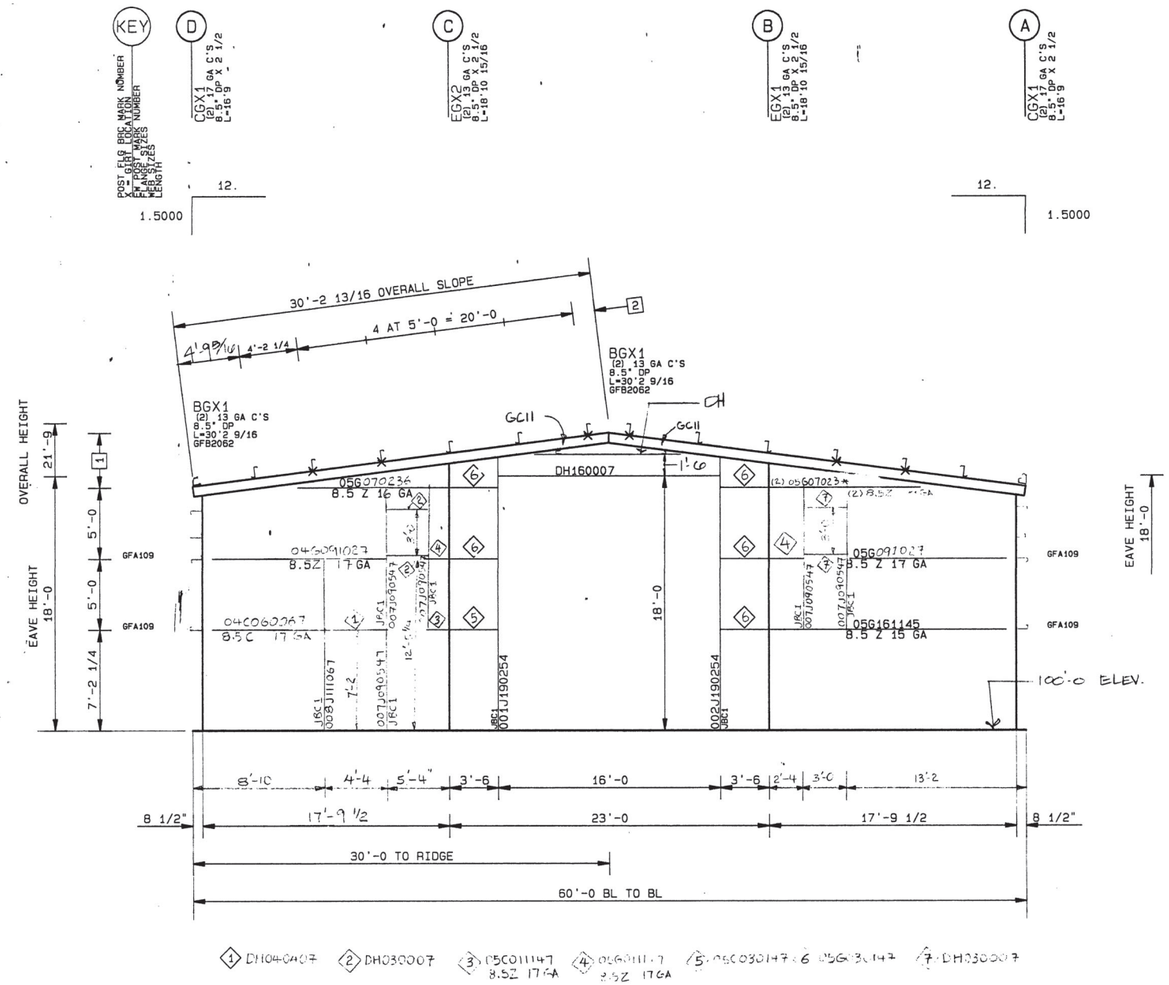

ENDWALL FRAMING AT FRAME LINE 5

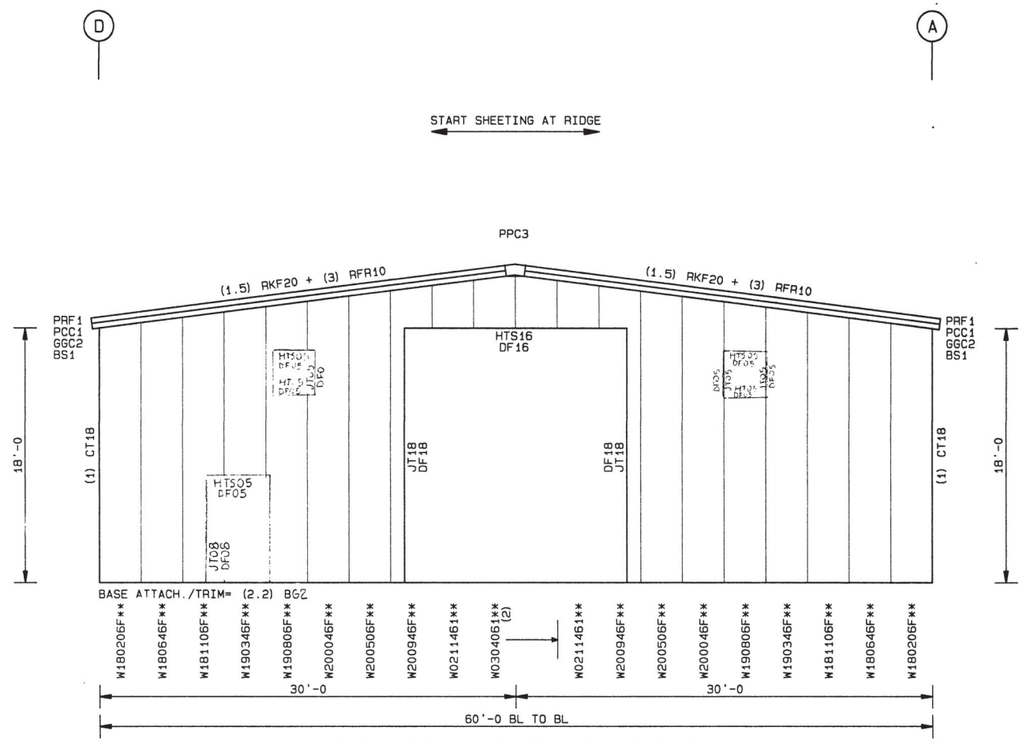

ELEVATION AT FRAME LINE 5

FOR INFORMATION ONLY

GENERAL NOTES
1. A325 HIGH STRENGTH BOLTS SHALL BE TIGHTENED IN ACCORDANCE WITH THE "SPECIFICATION FOR STRUCTURAL JOINTS USING ASTM A325 OR A490 BOLTS" SECTION 5 (C) "TURN-OF-NUT TIGHTENING".
2. USE 1/2" DIA. A-307 BOLTS FOR ALL GIRT, JAMB & HEADER CONN. SEE JOB DETAILS FOR BOLT LENGTH.
3. SEE JOB DETAILS FOR SHEETING AND TRIM FASTENER SPECIFICATIONS.
4. WALL SHEETS ARE AN INTEGRAL PART OF THE STRUCTURAL SYSTEM. REMOVAL OR ALTERATION WITHOUT PRIOR AUTHORIZATION IS PROHIBITED.
5. PRE-DRILLING 1/8" HOLES FOR WALL STRUCTURAL FASTENERS MAY BE REQUIRED AT 11 GAGE GIRTS, NESTED GIRTS, GIRT LAP LOCATIONS, AND/OR SECONDARY STRUCTURAL BEAMS.
6. FLANGE BRACE LOCATIONS ARE SHOWN BY "X". FLANGE BRACE PART MARKS (GFB___) ARE SHOWN WITH POST AND RAKE BEAM PART MARKS. BEAM FLANGE BRACES ONE SIDE, POST FLANGE BRACES BOTH SIDES.

FIELD LOCATED ACCESSORIES
QTY MARK NO. DESCRIPTION

THIS DRAWING, INCLUDING THE INFORMATION HEREON, REMAINS THE PROPERTY OF VARCO-PRUDEN BUILDINGS, A UNITED DOMINION COMPANY. IT IS PROVIDED SOLELY FOR ERECTING THE BUILDING DESCRIBED IN THE APPLICABLE PURCHASE ORDER AND SHALL NOT BE MODIFIED, REPRODUCED OR USED FOR ANY OTHER PURPOSE WITHOUT PRIOR WRITTEN APPROVAL OF VARCO-PRUDEN BUILDINGS.

THE GENERAL CONTRACTOR AND/OR ERECTOR IS SOLELY RESPONSIBLE FOR ACCURATE, GOOD QUALITY WORKMANSHIP IN ERECTING THIS BUILDING IN CONFORMANCE WITH THIS DRAWING. DETAILS REFERENCED IN THIS DRAWING, ALL APPLICABLE VARCO-PRUDEN ERECTION GUIDES, AND INDUSTRY STANDARDS PERTAINING TO PROPER ERECTION, INCLUDING THE CORRECT USE OF TEMPORARY BRACING.

ENDWALL ELEVATION M2680

BUILDER: ARIZONA BUILDING SYSTEMS
CUSTOMER: BUREAU OF RECLAMATION
LOCATION: PAGE, ARIZONA

DATE	REV	DATE	BY	DESCRIPTION
11/ 3/92	1	11/7	MA	SHOWED PADS

APPRX. SCALE 3/16"=1'

VARCO-PRUDEN BUILDINGS
A United Dominion Company

MBMA METAL BUILDING MANUFACTURERS ASSOCIATION

22132 J. H. SMITH Registered Professional Engineer ARIZONA, U.S.A.

THIS DRAWING IS SEALED ONLY AS TO THE COMPONENTS FURNISHED BY VARCO-PRUDEN

REW

JOB NO. 49347
DR.BY MDR CK.BY
DRAWING 12 OF

P.C.:CA CODER: ATA CHECKER: 'RUN: 11/ 3/92 11:33

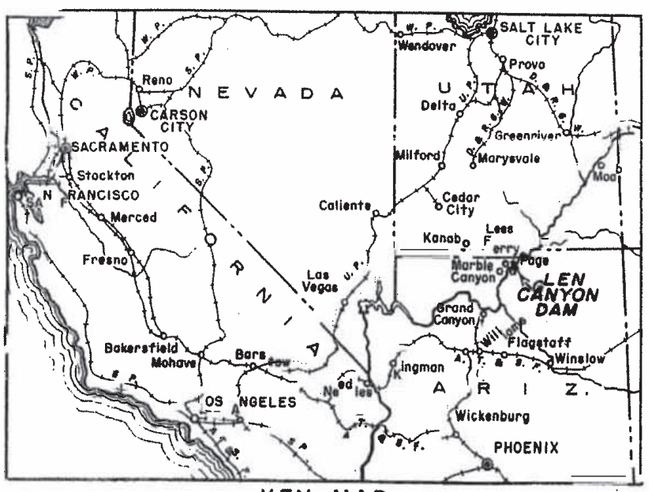

KEY MAP

ALWAYS THINK SAFETY

FOR INFORMATION ONLY

4-18-58 D EQL	ADDED LOCATIONS OF TESTED AGGREGATE DEPOSITS
4-1-57 D EPA	ADDED THE LOCATION OF THE COMMUNITY SITE AT GLEN CANYON DAM
12-14-56 D EPA	ADDED OUTLINE OF RESERVOIR

DELETED WAHWEAP DEPOSIT AND REVISED HIGHWAY DESIGNATIONS

DELETED COTTONWOOD, SUGAR LOAF, GRAY MOUNTAIN, AND CANYON AGGREGATE DEPOSITS

DELETED MANSON MESA DEPOSIT. EXTENDED ROAD ACROSS RIVER AT PAGE. SHOWED FINISHED ROAD BETWEEN PAGE & BITTER SPRINGS.

1-25-65 D MJ

2-20-62 D EQL

2-16-59 D R.S.L.

UNITED STATES
DEPARTMENT OF THE INTERIOR
BUREAU OF RECLAMATION

COLORADO RIVER STORAGE PROJECT
MIDDLE RIVER DIV.--GLEN CANYON UNIT-ARIZ.-UTAH

GLEN CANYON DAM
LOCATION MAP

DRAWN B.F.W. SUBMITTED [signature]
TRACED B.F.W. RECOMMENDED [signature]
CHECKED JK EPA APPROVED [signature] ASSOC. CHIEF ENGINEER

DENVER, COLORADO - AUG. 1, 1956 557-D-29

MYLAR COPY OF ORIGINAL - NOT TO BE USED FOR REVISIONS

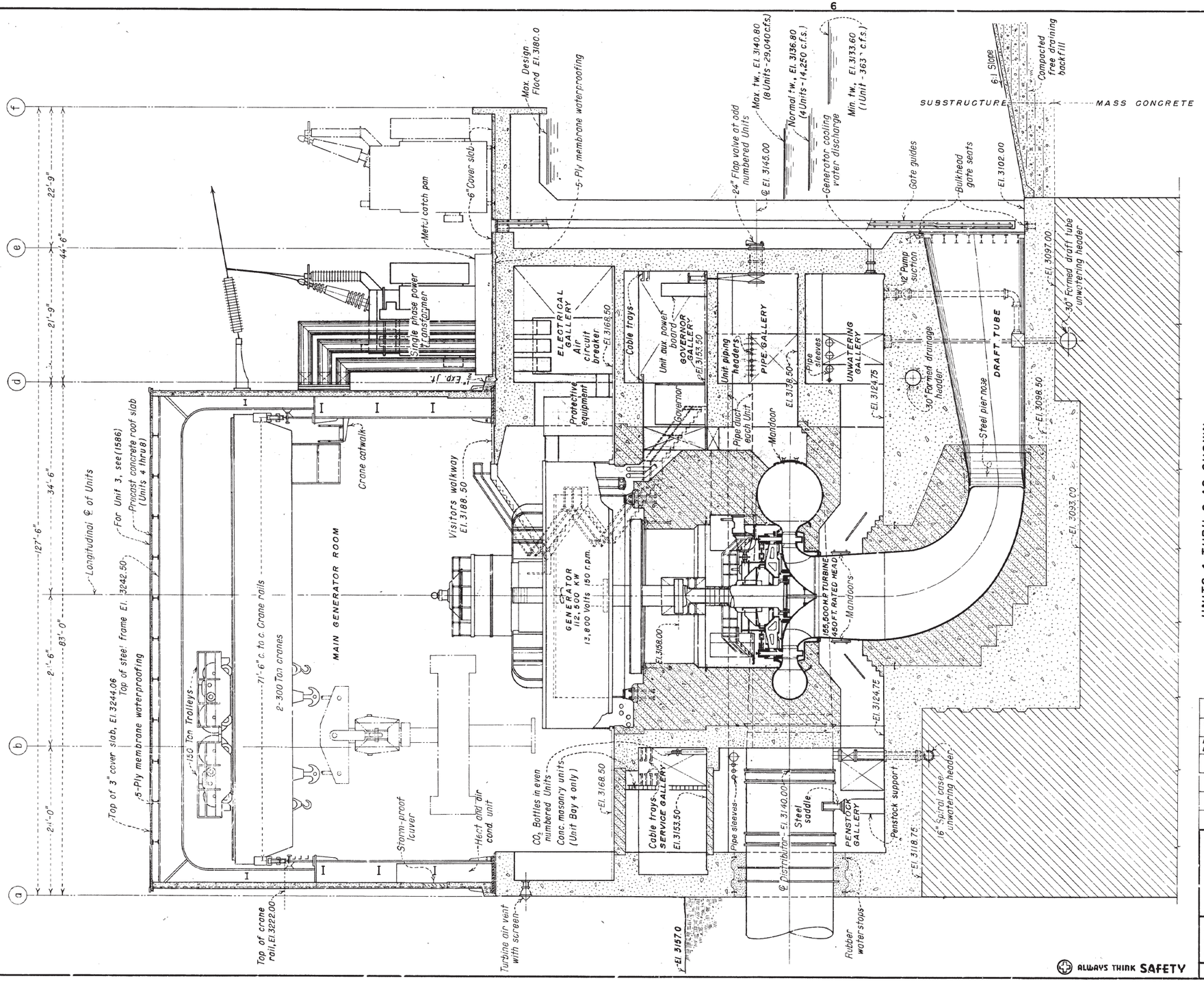

UNITS 4 THRU 8 AS SHOWN
UNIT 3 SIMILAR

NOTE
For Units 1 and 2, see 557-D-120 and 121.

FOR INFORMATION ONLY

1-16-79 D - E.E.M.	ADDED METAL CATCH PAN AROUND POWER TRANSFORMER.
11-12-63 D. W.D.B.	UPDATED TO SHOW LIGHTNING ARRESTER AND TRANSFORMER REVISIONS.
1-26-62 D. G.L.B.	REMOVED WINDOWS. REVISED ROOF AND GENERATOR OUTLINE.
5-29-61 D. C.L.B.	REVISED TAILRACE AND TURBINE OUTLINE. REVISED TAILWATER ELEVATIONS.
9-30-59 D. G.L.B.	REVISED TRANSFORMER AND BUS ARRANGEMENT, SERVICE GALLERY AND TRANSFER DECK FRAMING.
2-16-59 D. G.L.B.	REVISED TRANSFORMER DECK FRAMING
9-10-58 D. W.D.B.	REVISED TITLE BLOCK, CABLE TRAYS AND TURBINE PLATFORM-ADDED NOTE AND TAILWATER TABLES.

UNITED STATES
DEPARTMENT OF THE INTERIOR
BUREAU OF RECLAMATION
COLORADO RIVER STORAGE PROJECT
MIDDLE RIVER DIV. - GLEN CANYON UNIT - ARIZONA-UTAH

GLEN CANYON POWER PLANT
GENERAL ARRANGEMENT
TRANSVERSE SECTION THRU GENERATING UNITS 3 THRU 8

DRAWN M.G.F. SUBMITTED Samuel Dodd
TRACED G.G.M. RECOMMENDED C. E. Kiteppen
CHECKED OK W.D.B. APPROVED Grant Bloodgood, ASSOCIATE CHIEF ENGINEER

DENVER, COLORADO, NOV. 19, 1956 — 557-D-119

ALWAYS THINK SAFETY

50%

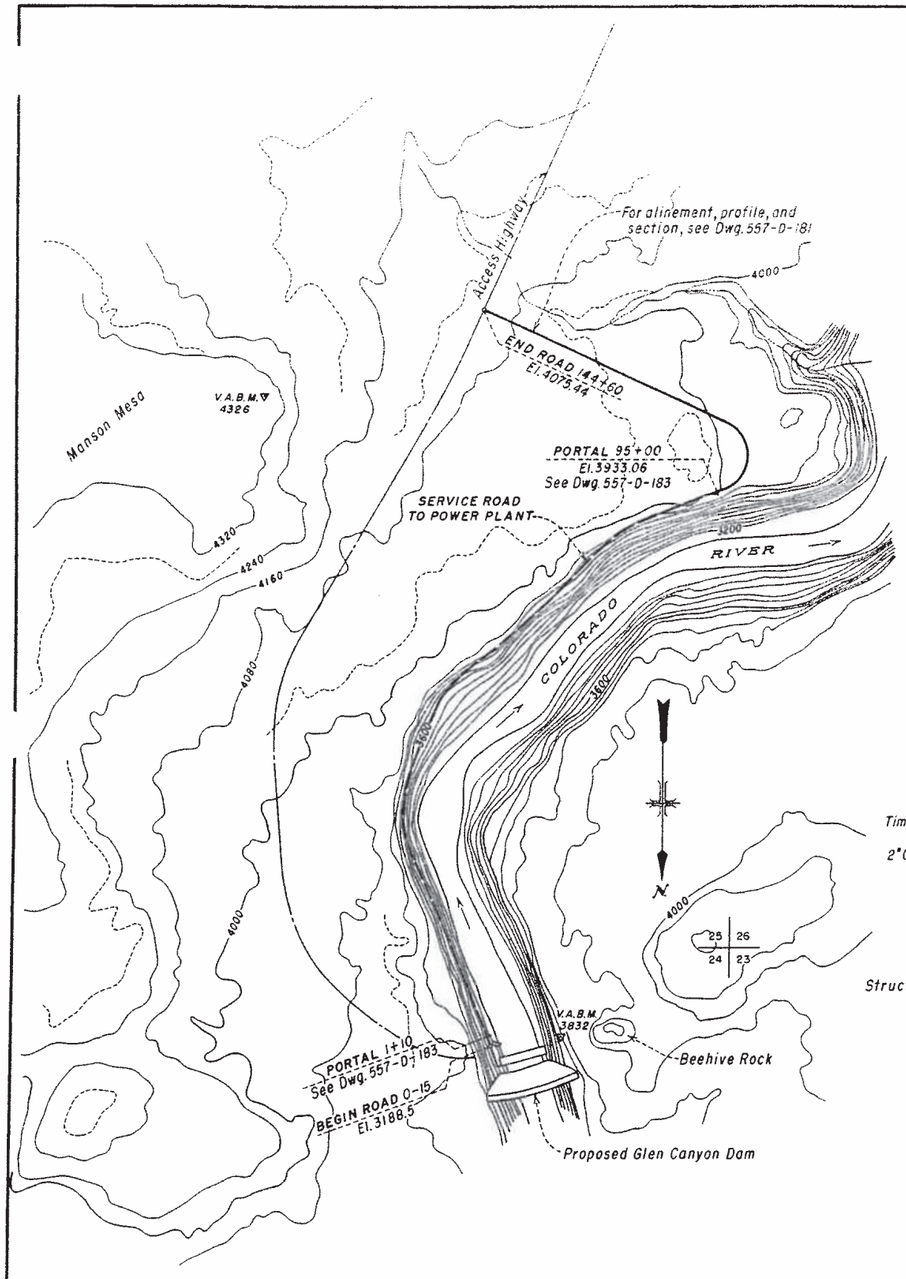

ALINEMENT

1000 0 1000
SCALE OF FEET

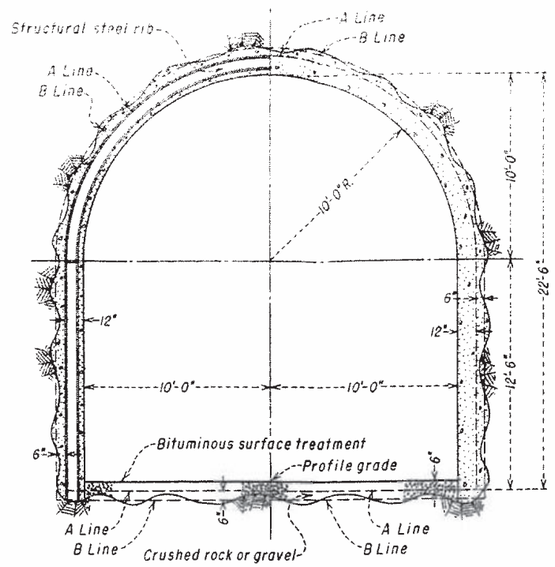

LINED HALF SECTION
STRUCTURAL STEEL RIBS

LINED HALF SECTION

LINING FOR PORTALS ONLY

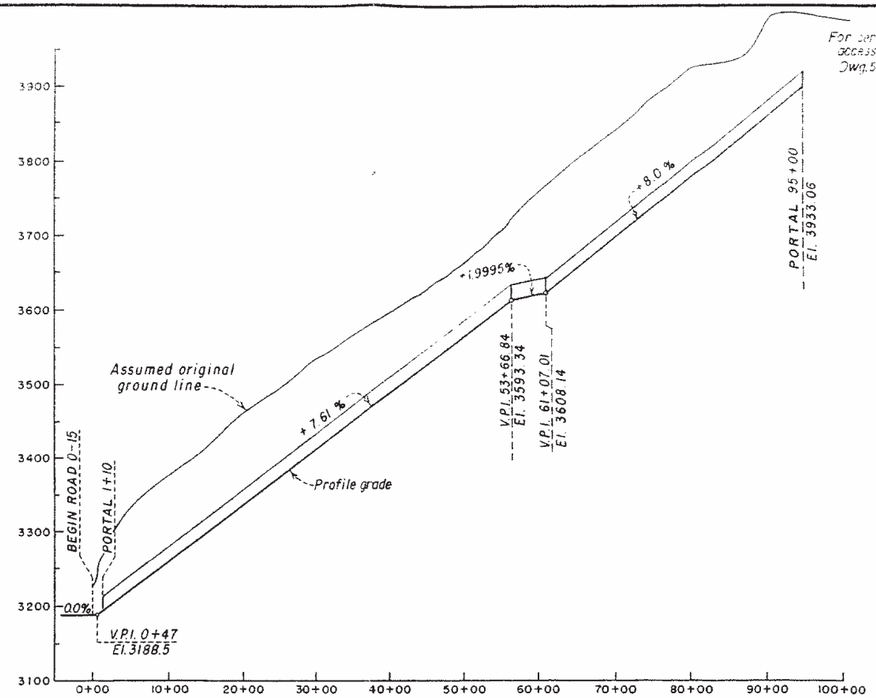

PROFILE ON ℄ OF ROAD

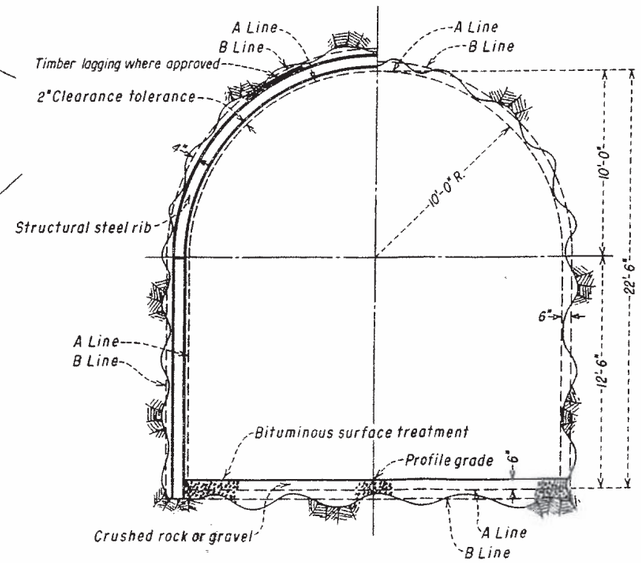

UNLINED HALF SECTION
STRUCTURAL STEEL RIBS

UNLINED HALF SECTION

1 0 5 10
SCALE OF FEET

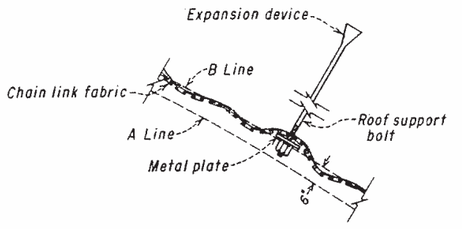

CHAIN LINK FABRIC
WITH ROOF SUPPORT BOLTS

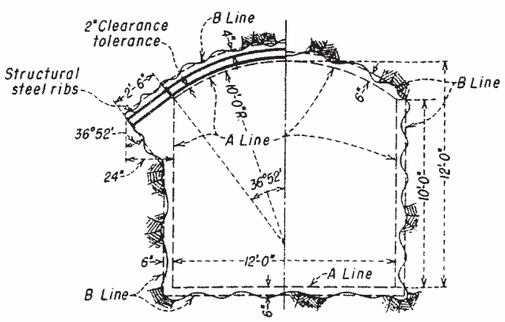

TYPICAL ADIT SECTION

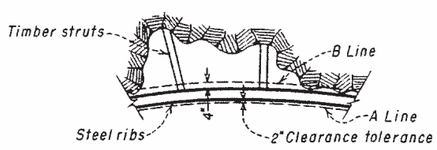

STRUCTURAL STEEL RIBS
WITH TIMBER STRUTS

NOTES

Concrete design based on a compressive strength of 3000 lbs. per sq. in. at 28 days.
Chamfer all permanently exposed edges $\frac{3}{4}$".
Location, size, and spacing of structural steel ribs and timber struts to be as approved.
Install timber lagging where approved.
All dimensions, elevations, and stations conform to minimum excavation.
Slope concrete surfaces to drain.
Concrete surfaces on exposed surfaces F2 and U2.
Reinforcement not shown.
Adits at approximate 500' centers.

FOR INFORMATION ONLY

ALWAYS THINK SAFETY

1-10-61 D-[illegible]	REVISED TUNNEL GRADE

UNITED STATES
DEPARTMENT OF THE INTERIOR
BUREAU OF RECLAMATION
COLORADO RIVER STORAGE PROJECT
MIDDLE RIVER UNIT - GLEN CANYON UNIT - - ARIZONA-UTAH

GLEN CANYON DAM

POWER PLANT SERVICE ROAD ALINEMENT, PROFILE AND TUNNEL SECTIONS

DRAWN R.B.H. Jr. SUBMITTED [illegible]
TRACED M.E.K. RECOMMENDED [illegible]
CHECKED [illegible] APPROVED [illegible]
CHIEF DESIGNING ENGINEER

DENVER, COLORADO NOV. 19, 1958

557-D-180

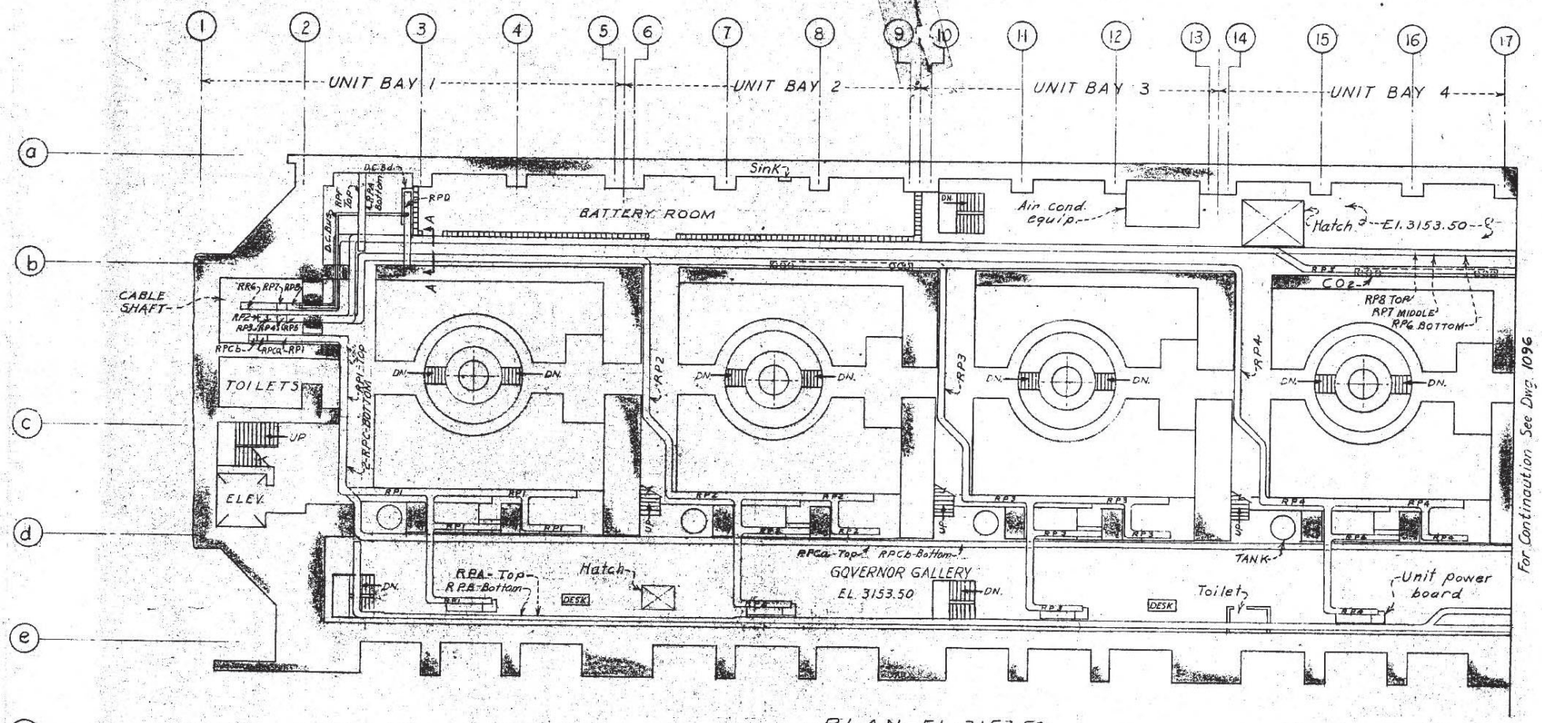

PLAN-EL. 3153.50

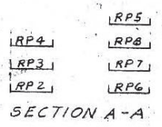

SECTION A-A

EXPLANATION

RP1, RP2, RP3, RP4, RP5, RP6, RP7, RP8 } Unit control trays in Power Plant

RPA, RPB } For power cables in the Power Plant

RPCa, RPCb } For control and telephone cables in the Power Plant

RPD - Tray for cables from Batt. Dist. Bd.

RPF - Tray for control cable to Dam

REFERENCE DRAWINGS

Cable trays and supports 557-D-2008 thru 557-D-1216

FOR INFORMATION ONLY

UNITED STATES
DEPARTMENT OF THE INTERIOR
BUREAU OF RECLAMATION
COLORADO RIVER STORAGE PROJECT
MIDDLE RIVER DIV. - GLEN CANYON UNIT-ARIZONA-UTAH

GLEN CANYON POWER PLANT
ELECTRICAL INSTALLATION
CABLE TRAYS LAYOUT
PLAN-EL. 3153.50-BAYS 1,2,3 AND 4

DRAWN H.M. SUBMITTED W.O. Clark
TRACED RECOMMENDED C.E. Lind
CHECKED H.F.P. APPROVED J.W. Dexter
CHIEF ELECTRICAL BRANCH
DENVER, COLORADO, JAN 23, 1959

557-D-1095

NOTE:
COMPUTER ROOM DIMENSION 40 FT X 20 FT X 8 FT HEIGHT WITH 16"SUBFLOOR
PERIPHERAL ROOM DIMENSION 20 FT X 20 FT X 8 FT HEIGHT WITH 6"SUBFLOOR

DETAIL "A" (J-BOXES UNDER FLOOR)

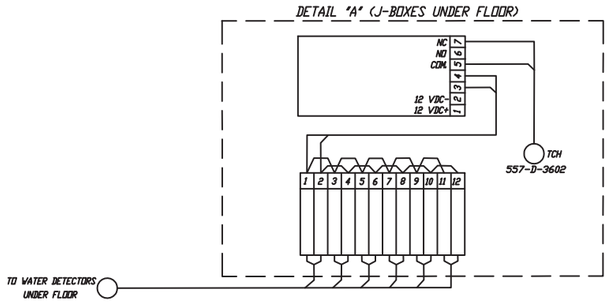

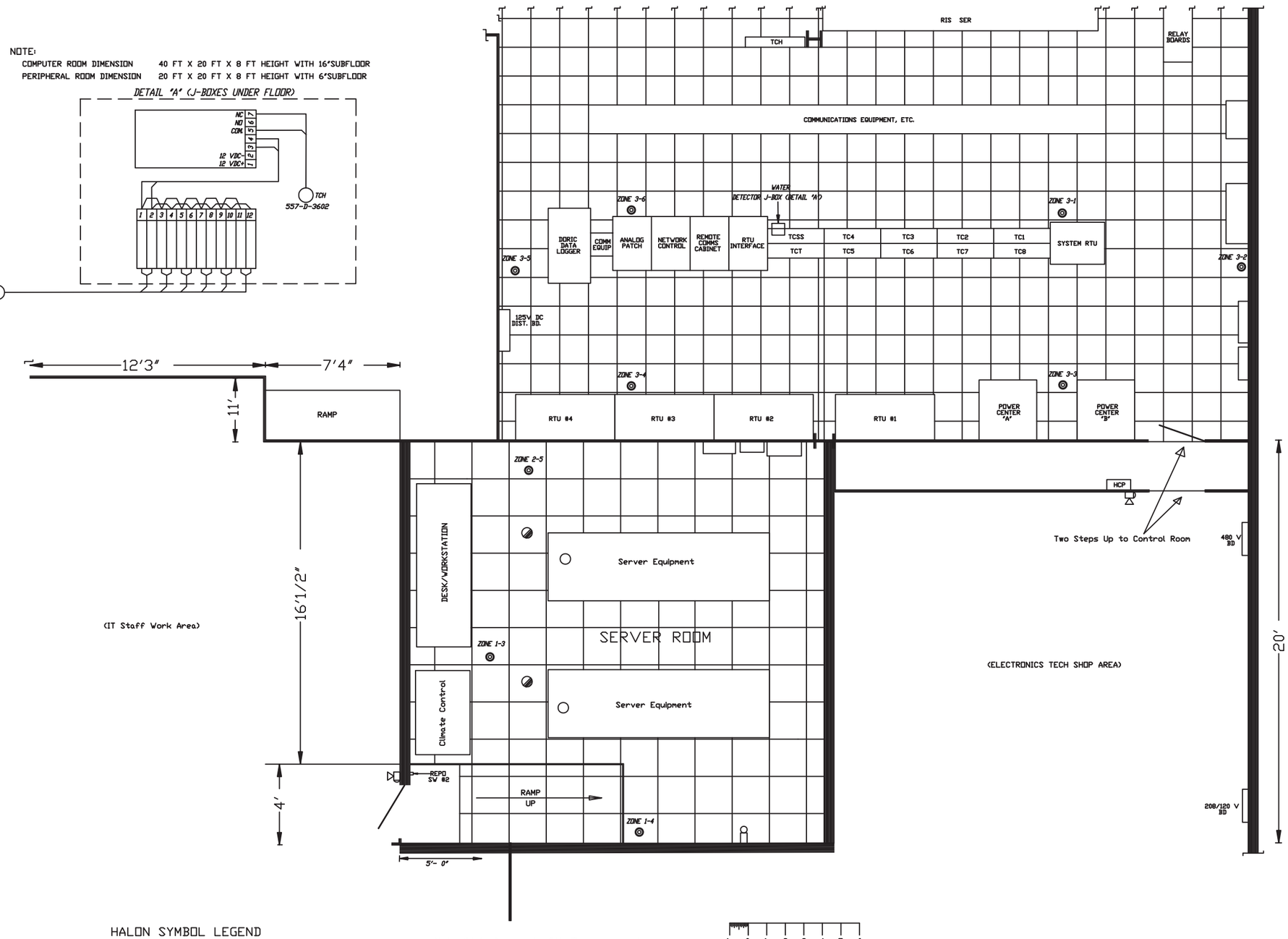

HALON SYMBOL LEGEND

(H)	HALON STORAGE CONTAINER		DISCHARGE SIGNAL HORN/STROBE		SUBFLOOR DETECTORS
	NOZZLE-360°4 PORT	HCP	HALON CONTROL PANEL		ROOM DETECTORS
	SUB-FLOOR NOZZLE-360°4 PORT		PRE-ALARM BELL	PA	MANUAL PULL STATION

Note: Stair Access to 9th Floor removed.

WATER DETECTION SYMBOL LEGEND

WATER DETECTORS UNDER FLOOR

1 0 1 2 3 4 5 6

SCALE - FEET

FOR INFORMATION ONLY

3-31-21 420-D.F.	Updated Halon System and Rooms Layout
6-27-91 420-D.B.	ADDED WATER DETECTORS AND CHANGED TITLE

ALWAYS THINK SAFETY

UNITED STATES
DEPARTMENT OF THE INTERIOR
BUREAU OF RECLAMATION
COLORADO RIVER STORAGE PROJECT
MIDDLE RIVER DIV. GLEN CANYON UNIT - ARIZONA-UTAH

GLEN CANYON POWER PLANT
ELECTRICAL INSTALLATION
HALON FIRE PROTECTION SYSTEM AND WATER DETECTION SYSTEM LAYOUT

DESIGNED D.B. SUBMITTED
DRAWN D.L.C./G.C.P. RECOMMENDED
CHECKED D.B. APPROVED
CHIEF, ELECTRICAL BRANCH

DENVER, COLORADO JANUARY 20, 1987 | 557-420-1711

GLEN CANYON COMPUTER DRAFTING

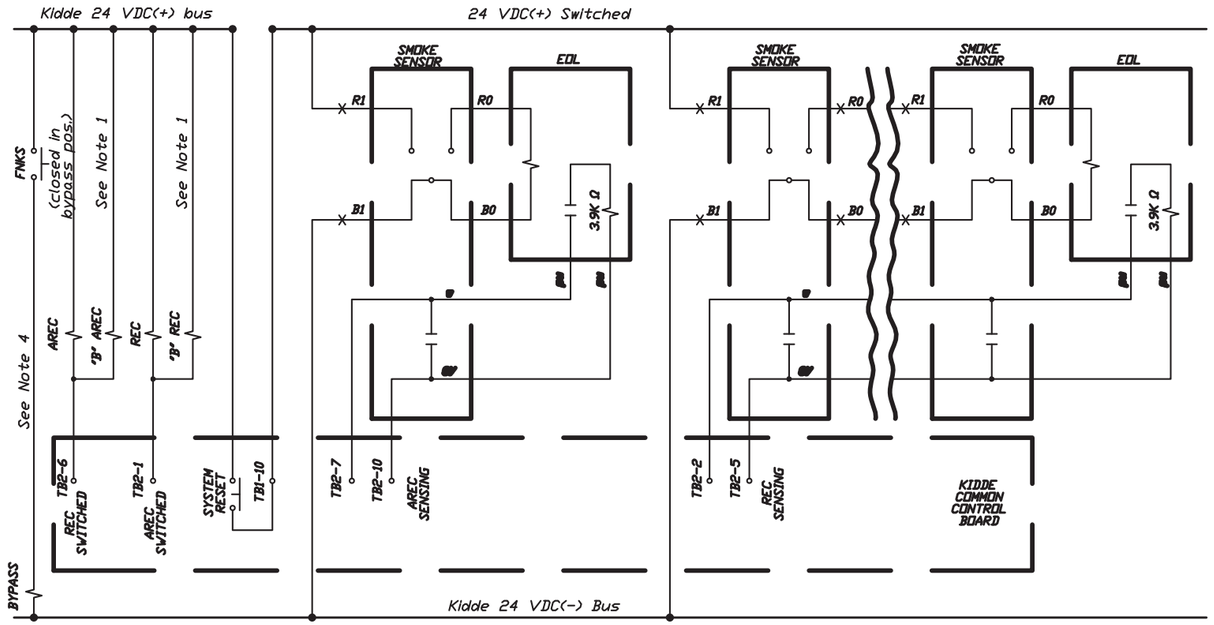

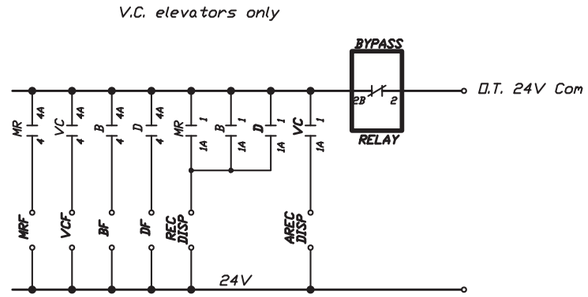

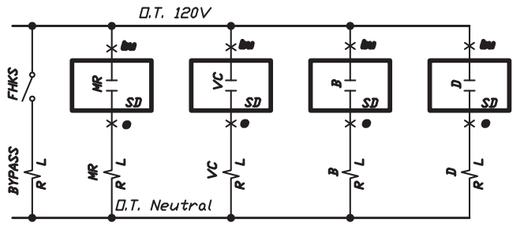

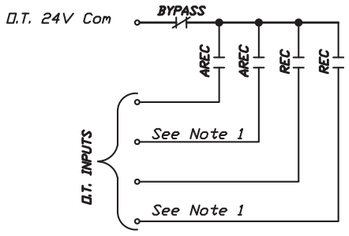

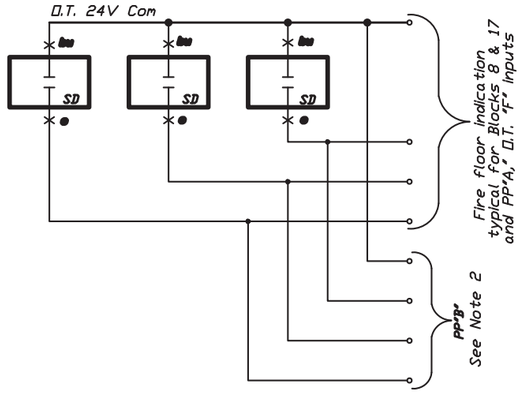

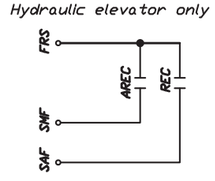

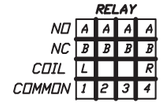

EXPLANATION

—✕— - INDICATES TERMINATIONS IN HOISTWAY JUNCTION BOXES

END OF LINE RELAY LOCATIONS

	DAM ELEVATORS	POWER PLANT ELEVATORS	HYDRAULIC ELEVATOR	VISITOR CENTER ELEVATORS
RECALL	IN BOTTOM FLOOR SMOKE DETECTOR (elevator goes to top floor)	IN FLOOR ONE SMOKE DETECTOR (elevator goes to floor 3)	IN FLOOR 2 SMOKE DETECTOR (elevator goes to floor 3)	IN DAM SMOKE DETECTOR (elevator goes to VC floor)
ALT. RECALL	IN TOP FLOOR SMOKE DETECTOR (elevator goes to bottom floor)	IN FLOOR 3 SMOKE DETECTOR (elevator goes to floor 8)	IN FLOOR 3 SMOKE DETECTOR (elevator goes to floor 2)	IN VC SMOKE DETECTOR (elevator goes to Dam floor)

NOTES

1. Power Plant elevators each have a REC and an AREC relay in the Kidde Panel.
2. Power Plant A elevator has F indications jumpered over to B elevator.
3. For Power Plant B only.
4. Not used in hydraulic elevator.

FOR INFORMATION ONLY

ALWAYS THINK SAFETY

UNITED STATES
DEPARTMENT OF THE INTERIOR
BUREAU OF RECLAMATION
COLORADO RIVER STORAGE PROJECT
MIDDLE RIVER DIV. GLEN CANYON UNIT – ARIZONA-UTAH

GLEN CANYON POWER PLANT
ELECTRICAL INSTALLATION
ELEVATOR FIRE SYSTEM
SCHEMATIC

DESIGNED J. BROWN SUBMITTED
DRAWN RECOMMENDED
CHECKED APPROVED
PAGE, ARIZONA JUNE 2, 1989 557-420-1797

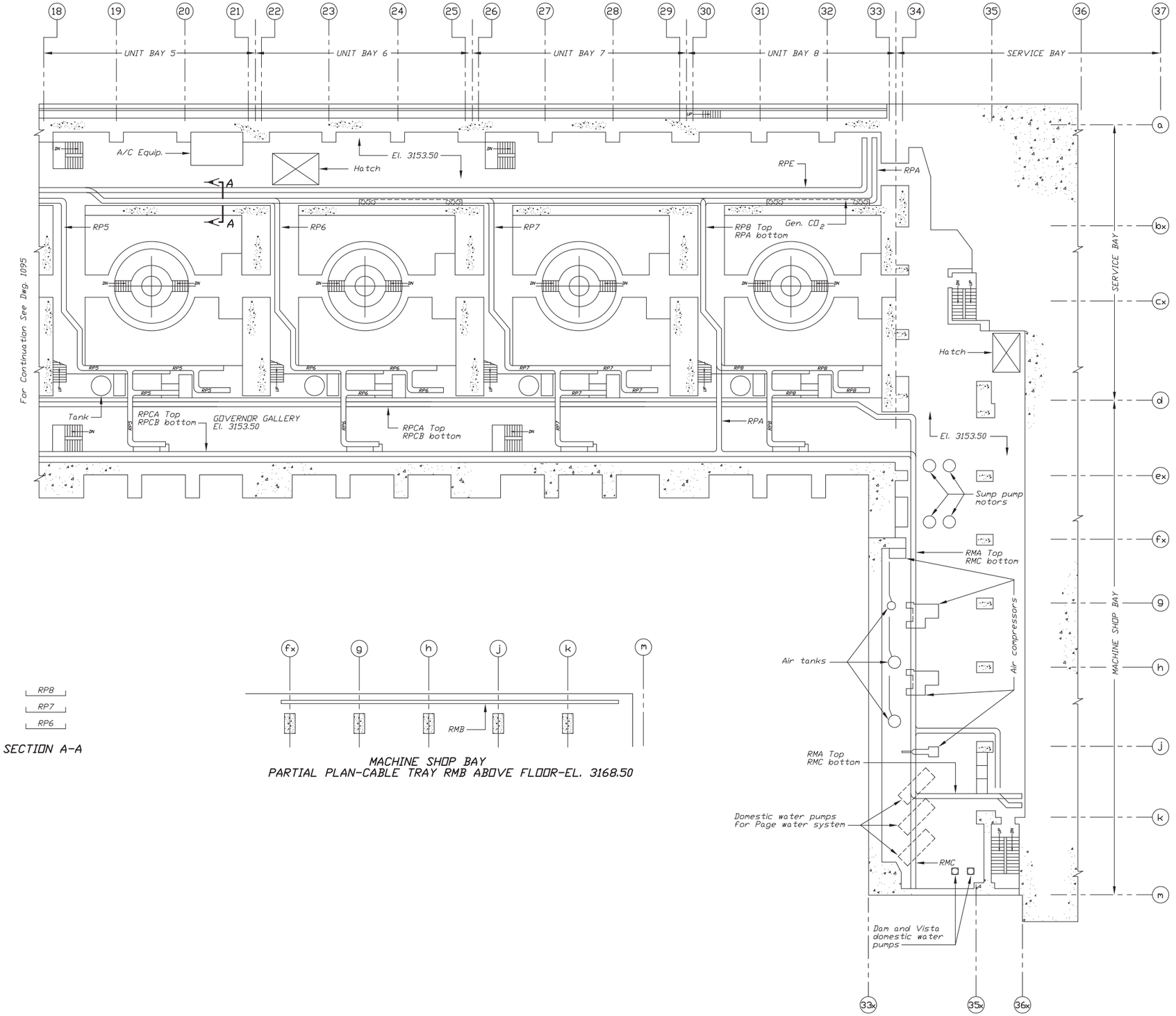

EXPLANATION

RP5, RP6, RP7, RP8 — Unit control trays in power plant

RPCa, RPCb — For power cables in power plant

RPA, RPB — For control and telephone cables in power plant

RPE– Tray for control cable to dam
RMA– Tray for power cables in machine shop bay
RMB– Tyay for power cables to machine shop equipment
RMC– Tray for control cables in machine shop bay

RP8
RP7
RP6

SECTION A-A

MACHINE SHOP BAY
PARTIAL PLAN-CABLE TRAY RMB ABOVE FLOOR-EL. 3168.50

FOR INFORMATION ONLY

THIS DRAWING SUPERSEDES DRAWING
557-D-1096, 2014-05-01

ALWAYS THINK SAFETY

UNITED STATES
DEPARTMENT OF THE INTERIOR
BUREAU OF RECLAMATION
COLORADO RIVER STORAGE PROJECT
MIDDLE RIVER DIV. GLEN CANYON UNIT - ARIZONA-UTAH

GLEN CANYON POWER PLANT
ELECTRICAL INSTALLATION
CABLE TRAYS LAYOUT
PLAN-EL. 3153.50-BAYS 5,6,7,8,S AND M

DRAWN	H.M.	SUBMITTED	W.H. Clarke
TRACED		RECOMMENDED	R.J. Hind
CHECKED	H.F.P.	APPROVED	J.W. Baptiste, CHIEF, ELECTRICAL BRANCH

DENVER, COLORADO JANUARY 26, 1959 557-420-11096

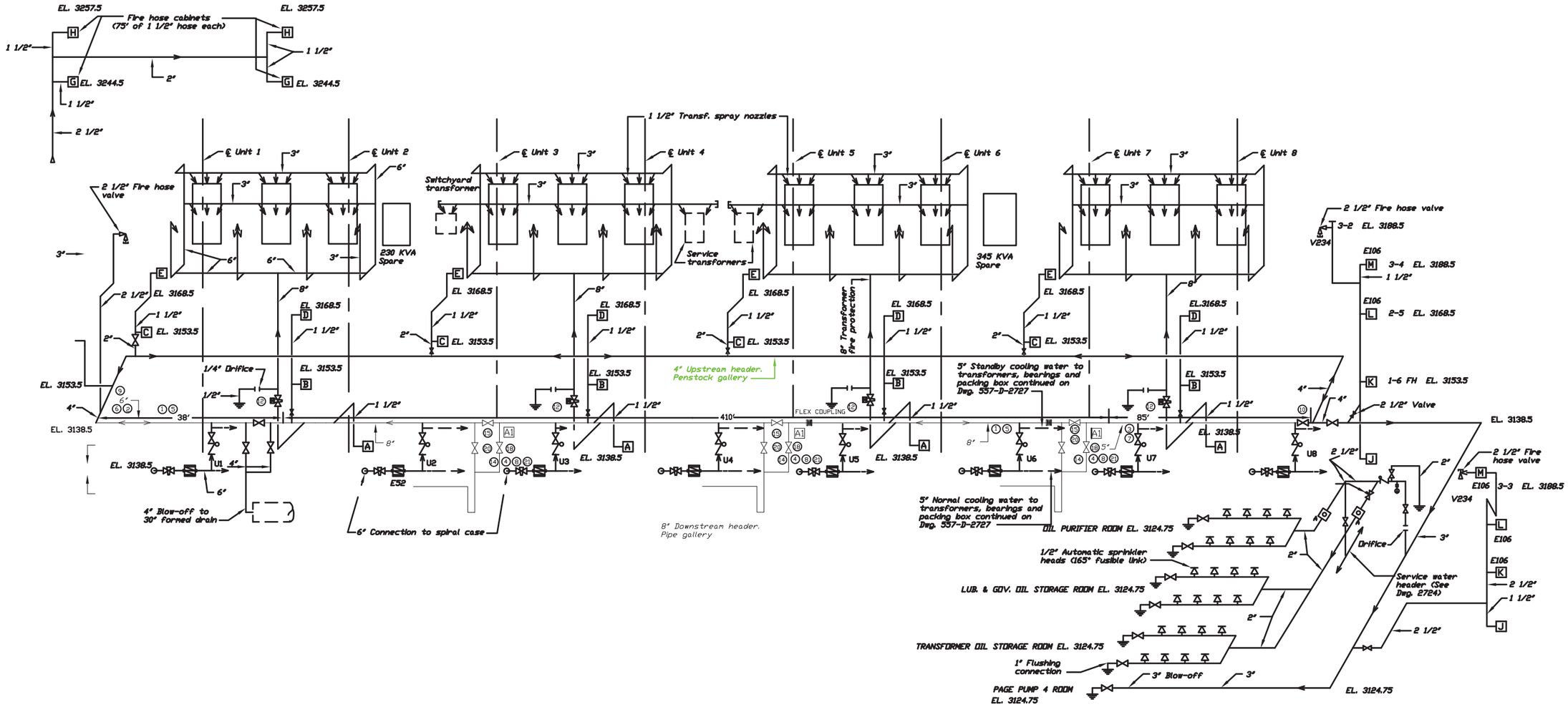

NO.	DESCRIPTION	UNIT	AMOUNT	DESCRIPTIPTION
1	8 INCH STEEL PIPE	L.F.	750	VICTALUIC GROOVED SCHEDUAL 80 CARBON STEEL PIPE
2	6 INCH STEEL PIPE	L.F.	50	VICTALUIC GROOVED SCHEDUAL 80 CARBON STEEL PIPE
3	5 INCH STEEL PIPE	L.F.	125	VICTALUIC GROOVED SCHEDUAL 80 CARBON STEEL PIPE
4	4 INCH STEEL PIPE	L.F.	250	VICTALUIC GROOVED SCHEDUAL 80 CARBON STEEL PIPE
5	8 INCH VICTALIC RIDGID COUPLINGS	EA	150	VICTALUIC STYLE 07 ZERO FLEX RIGID COUPLING OR EQUIVILANT.
6	6 INCH VICTALIC RIDGID COUPLINGS	EA	8	VICTALUIC STYLE 07 ZERO FLEX RIGID COUPLING OR EQUIVILANT
7	5 INCH VICTALIC RIDGID COUPLINGS	EA	25	VICTALUIC STYLE 07 ZERO FLEX RIGID COUPLING OR EQUIVILANT
8	4 INCH VICTALIC RIDGID COUPLINGS	EA	25	VICTALUIC STYLE 07 ZERO FLEX RIGID COUPLING OR EQUIVILANT
9	8 INCH TO 6 INCH VIC PIPE REDUCER	EA	1	VICTALUIC GROOVED NO. 51 REDUCER OR EQUIVILANT
10	5 INCH TO 4 INCH VIC PIPE REDUCER	EA	1	VICTALUIC GROOVED NO. 51 REDUCER OR EQUIVILANT
11	6 INCH TO 4 INCH VIC PIPE REDUCER	EA	0	VICTALUIC GROOVED NO. 51 REDUCER OR EQUIVILANT
12	8 INCH PIPE TEE	EA	20	VICTALUIC GROOVED IPS NO. 20 FITTING OR EQUIVILANT
13	5 INCH PIPE TEE	EA	1	VICTALUIC GROOVED IPS NO. 20 FITTING OR EQUIVILANT
14	4 INCH PIPE TEE	EA	6	VICTALUIC GROOVED IPS NO. 20 FITTING OR EQUIVILANT
15	8 INCH GATE VALVE	EA	3	8 INCH 300 P.S.I. WOG RISING STEM GATE VALVE
16	6 INCH GATE VALVE	EA	0	6 INCH 300 P.S.I. WOG RISING STEM GATE VALVE
17	5 INCH GATE VALVE	EA	0	5 INCH 300 P.S.I. WOG RISING STEM GATE VALVE
18	4 INCH GATE VALVE	EA	6	4 INCH 300 P.S.I. WOG RISING STEM GATE VALVE
20	8 INCH GROOVE TO FLANGE ADAPTERS	EA	6	8 INCH VIC-FLANGE ADAPTER STYLE 743 OR EQUIVILANT- ANSI 300
21	4 INCH GROOVE TO FLANGE ADAPTERS	EA	12	4 INCH VIC-FLANGE ADAPTER STYLE 743 OR EQUIVILANT- ANSI 300

A1 VALVE TREE DESCRIBED ON PAGE 3 OF MODIFICATION PACKAGE DRAWINGS

NOTES:
THE PROJECT COULD INTERFERE WITH AUXIALLY BEARING COOLING WATER AND SOME FIRE SUPRESSION SYSTEMS. OPERATIONS SHOULD BE NOTIFIED BEFORE WORK BEGINS.

EACH NEW SECTION OF PIPE AND VALVE TREE SHOULD BE COMPLETED INDIVIDUALLY IN ORDER TO LIMIT THE INTERFERENCE OF FIRE SUPRESSION SYSTEMS.

THE FREEZE PLUG SHOULD BE ATTACHED AND ACTIVATED TWO HOURS BEFORE WORK BEGINS.

A VICTALUIC TO FLANGE ADAPTER FOR EACH SIZE PIPE, 4 INCH, 5 INCH, 6 INCH, AND 8 INCH SHOULD BE CONSTRUCTED BEFORE WORK BEGINS.

FOR INFORMATION ONLY

THIS DRAWING SUPERSEDES DRAWING 557-D-4066, 2014-05-01

ALWAYS THINK SAFETY

UNITED STATES
DEPARTMENT OF THE INTERIOR
BUREAU OF RECLAMATION
COLORADO RIVER STORAGE PROJECT
MIDDLE RIVER DIV. GLEN CANYON UNIT - ARIZONA-UTAH

GLEN CANYON POWER PLANT

MECHANICAL PLANNING DRAWING

SINGLE LINE FIRE WATER MAIN DRAWING FIRE PROTECTION SYSTEMS

DESIGNED JOSEPH J. MONTESANO SUBMITTED
DRAWN J.J.M RECOMMENDED
CHECKED APPROVED
PAGE, ARIZONA DECEMBER 13, 2005
SHEET 2 OF 3

557-420-14066

1

DATE AND TIME PLOTTED
OCTOBER 30, 2020 11:41
PLOTTED BY
TORTESS

CAD SYSTEM
AutoCAD Rel. 22.0s
CAD FILENAME
557-420-14066-2.DWG

MME

SMOKE EXHAUST FAN DISTRIBUTION BOARD

PANEL: MME MAIN BUS: 225 AMPS 480 VOLT, 3 PHASE, 4 WIRE
LOCATION: EL. 3188.50 MAIN: LUG 65,000 MIN. SYM. AMPS INTERRUPTING CAPACITY
ENTRY: BOTTOM FEEDER: 4/0
MOUNTING: FLOOR NOTE: MME FED FROM MMA BREAKER 19

CONDUIT NUMBER	WIRE SIZE	DIRECTORY	LOAD VA	BKR AMP	PHASE A B C	BKR AMP	LOAD VA	DIRECTORY	WIRE SIZE	CONDUIT NUMBER
		SPACE			1 2			SPACE		
					3 4	25				
					5 6					
		SPACE			7 8			SPACE		
					9 10	25				
					11 12					
					13 14					
	8	MF12A & MPF12B (7.6A EACH)		25	15 16	25		PHPF8A & PHPF8B (7.6A EACH)	8	
					17 18					
					19 20					
	8	MF4A & MF4B (7.6A EACH)		25	21 22	25		PHPF9A & PHPF9B (7.6A EACH)	8	
					23 24					
					25 26					
	8	MF3A & MF3B (7.6A EACH)		25	27 28	25		PHPF6A & PHPF6B (7.6A EACH)	8	
					29 30					
					31 32					
	8	MPF1A & MPF1B (7.6A EACH)		25	33 34			PHPF5A & PHPF5B (7.6A EACH)	8	
					35 36					
					37 38					
	8	MPF2A & MPF2B (7.6A EACH)		25	39 40			PHPF1A & PHPF1B (7.6A EACH)	8	
					41 42					

PHASE A : 42104 VA PHASE A : 42104 VA PHASE C : 42104 VA IMBALANCE FACTOR : NA

TOTAL CONNECTED LOAD : 9.4 KVA

A-A

STARTER MOUNTING ARRANGENENT AT SIDE OF MME

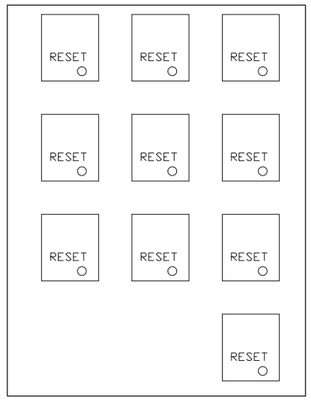

SECTION A-A

TO SUBSTATION MMA

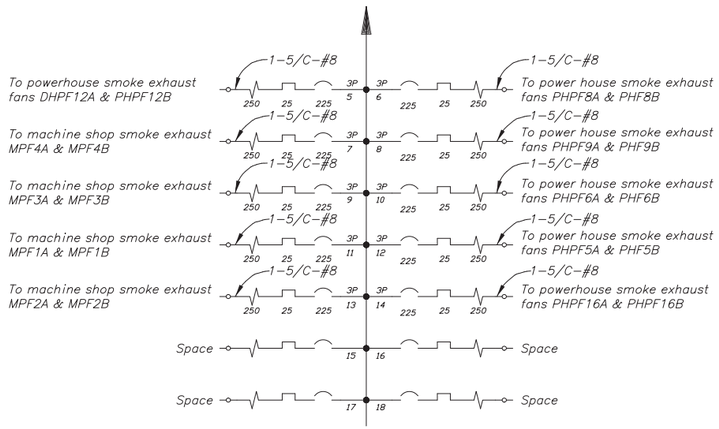

REMOTE PILOT DEVICES	CONNECTIONS FOR NON-REVERSING STARTER

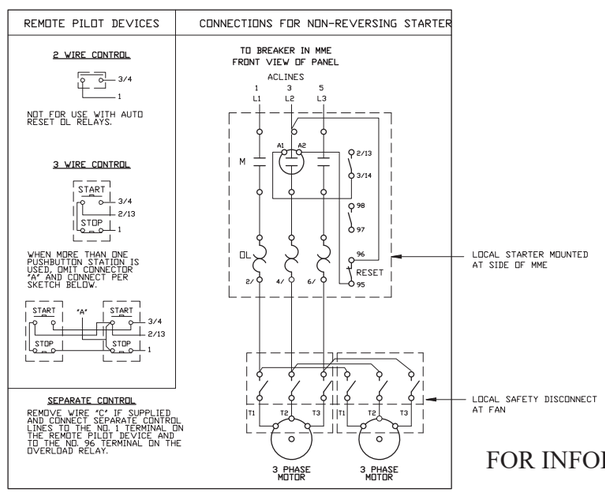

TYPICAL SCHEMATIC FOR FAN STARTER

REFERENCE DRAWINGS

1. General notes and operational notes.....557-420-2280
2. Equipment list and nac load chart.....557-420-2281
3. Sequence of operations matrix.....557-420-2282
4. Linear thermal detector wiring.....557-420-2283
5. Typical initiating device wiring.....557-420-2284
6. Typical initiating device mounting.....557-420-2285
7. Notif. device wiring & mounting.....557-420-2286
8. Aux. pwr supply for fan shutdown.....557-420-2287
9. 480V Smoke exhaust system Distribution Board MME single-line and Board Schedule.....557-D-4104
10. Smoke exhaust system 480V Loads and Distribution Board MME-El. 3188.50 location plan.....557-D-4103
11. Panel MMA wiring.....557-D-3856
12. EATON Dwg. M1-S0008755 SHT. 1-3 for MME Switchboard Unit information.....420M-2627
13. EATON Dwg. SB000064-MME Switchboard front plan.....420M-2628
14. EATON Dwg. SF000YY0-MME Switchboard front elevation.....420M-2629

THIS DRAWING SUPERSEDES DRAWING 557-D-4101, 2014-05-01

FOR INFORMATION ONLY

ALWAYS THINK SAFETY

UNITED STATES
DEPARTMENT OF THE INTERIOR
BUREAU OF RECLAMATION
COLORADO RIVER STORAGE PROJECT
MIDDLE RIVER DIV. GLEN CANYON UNIT - ARIZONA-UTAH
GLEN CANYON POWER PLANT
ELECTRICAL INSTALLATION
FIRE DETECTION AND ALARM SYSTEMS
480V SMOKE EXHAUST DISTRIBUTION BOARD MME
SINGLE-LINE AND BOARD SCHEDULE

DESIGNED JOSEPH J. MONTESANO
DRAWN J.J.M. TECHNICAL APPROVAL JOSEPH J. MONTESANO
CHECKED LOUIS H. MARTELLA APPROVED B.R. LEUENBERGER, MANAGER, ELECTRICAL SYSTEMS GROUP

DENVER, COLORADO DECEMBER 2, 1999 SHEET 1 OF 2

557-420-14104

DATE AND TIME PLOTTED OCTOBER 30, 2020 11:40
PLOTTED BY TGRIESS
CAD SYSTEM AutoCAD Rel. 22.0s
CAD FILENAME 557-420-14104.DWG

ADVANCED FIRE PROTECTION SYSTEM
SIEMENS MXL SERIES - FIRE ALARM
GLEN CANYON DAM
CONTRACT NO.: 04CC408055
PAGE, ARIZONA
AS-BUILTS

GENERAL CONTRACTOR
HILLER SYSTEMS INC.
833 PRINCIPAL LANE
CHESAPEAKE, VIRGINIA 23320
TEL: (757)-549-9123
FAX: (757)-549-1083

ELECTRICAL CONTRACTOR
INDUSTRIAL WEST ELECTRIC, INC.
20926 NORTH 67TH STREET
GLENDALE, AZ 85308
TEL: (623) 561-5168
FAX: (623) 561-5197

HVAC CONTRACTOR
KINETIC SYSTEMS, INC.
2825 WEST THOMAS ROAD
PHOENIX, AZ 85017
TEL: (602) 685-2000
FAX: (602) 685-2297

MECHANICAL ENGINEERING
PACE COLLABORATIVE
5151 BONNEY ROAD
VIRGINIA BEACH, VA 23462
TEL: (757) 499-7223
FAX: (757) 671-8712

FIRE PROTECTION ENGINEERING
HUGHES ASSOCIATES, INC.
3610 COMMERCE DRIVE, SUITE 817
BALTIMORE, MD 21227
TEL: (410) 737-8677
FAX: (410) 737-8688

Hiller Systems Inc

FIRE DETECTION & SUPPRESSION DESIGNERS & INSTALLERS

WWW.HILLERSYSTEMSINC.COM

FOR INFORMATION ONLY

SYMBOL LEGEND

Symbol	Description
FCP	FIRE ALARM CONTROL PANEL
ANN	REMOTE LED ANNUNCIATOR
FCCP	FIREFIGHTERS COMMAND/CONTROL PANEL
EX	SCADA ROOM – EXISTING AGENT RELEASE AND CONTROL PANEL
P	ADDR. MANUAL PULL STATION
	NOTIFICATION APPLIANCE HORN/STROBE
	NOTIFICATION APPLIANCE STROBE
S	ADDRESSABLE ION SMOKE DETECTOR
D	ADDRESSABLE ION DUCT DETECTOR
	SPRINKLER SYS TAMPER SWITCH
MM	ADDRESSABLE MONITOR MODULE
RM	ADDRESSABLE RELAY MODULE
DSM	DUAL SYNCHRONIZATION MODULE
CZM	ADDRESSABLE CONVENTIONAL ZONE MODULE
	120VAC MAGNETIC DOOR HOLDER
BP	BEAM SMOKE DETECTOR – PROJECTOR
BR	BEAM SMOKE DETECTOR – REFLECTOR BASE
	THERMAL DETECTOR
F	FLAME DETECTOR
LT	LINEAR THERMAL DETECTOR
EOL	END OF LINE RESISTOR

INSTALLATION NOTES

1) DO NOT BRING ANY CONDUIT INTO THE BOTTOM OF ANY PANEL ENCLOSURE. THIS SPACE IS TO BE RESERVED FOR BATTERIES.
2) ALL WIRING IS CLASS "A" (REDUNDANT). T–TAPPING IS NOT ALLOWED ON ANY CIRCUIT FOR ANY REASON. NOTE: A TRUE CLASS "A" CIRCUIT REQUIRES BOTH THE FEED AND RETURN CIRCUITS BE RUN IN SEPARATE CONDUIT WITH A SUBSTANTIAL DISTANCE BETWEEN THE FEED AND RETURN CONDUIT RUNS.
3) ALL WIRING SHOULD BE TESTED FOR OPENS, SHORTS, AND GROUNDS PRIOR TO CONNECTING ANY EQUIPMENT.
4) MOUNT FIRE ALARM CONTROL PANEL AT 60" ABOVE THE FINISHED FLOOR, FROM THE TOP OF THE PANEL.
5) MOUNT MANUAL PULL STATIONS AT 48" ABOVE THE FINISHED FLOOR IN ACCORDANCE WITH NFPA AND ADA REQUIREMENTS.
6) MOUNT AUDIO/VISUAL DEVICES AT 80" ABOVE THE FINISHED FLOOR OR 6" BELOW THE CEILING (WHICHEVER IS LOWER) IN ACCORDANCE WITH NFPA AND ADA REQUIREMENTS.
7) OBSERVE AT ALL TIMES, INITIATING AND NOTIFICATION DEVICE POLARITY AS SHOWN HEREON.
8) MOUNT SMOKE DETECTORS A MINIMUM OF 3' FROM ALL SUPPLY AND RETURN AIR DIFFUSERS.
9) WIRING SHALL BE RUN WITH RESPECT TO CONDUCTOR SIZE, TYPE, AND QUANTITY AS SHOWN HEREON. CONDUCTORS SHALL BE PERMANENTLY MARKED FOR FUTURE IDENTIFICATION.
10) 120VAC POWER SHALL NOT BE APPLIED TO ANY FIRE ALARM SYSTEM PANEL WITHOUT THE DIRECT SUPERVISION OF A FACTORY TRAINED TECHNICIAN FOR ANY REASON.
11) CIRCUIT RUNS SHOWN ARE NOT INDICATIVE OF CONDUIT INSTALLATION ROUTES. ACTUAL CONDUIT INSTALLATION SHALL BE IN ACCORDANCE WITH CONTRACT REQUIREMENTS (SCOPE OF WORK) AND NEC, NFPA 70 & NFPA 72 REQUIREMENTS.
12) ALL CABLE RUNS AND CABLE PENETRATIONS SHOWN ARE GRAPHICAL REPRESENTATIONS ONLY. ACTUAL CABLE RUNS SHALL BE DETERMINED IN THE FIELD.
13) SEE MANUFACTURERS DATA SHEETS/INSTALLATION MANUAL(S) FOR SPECIFIC, DETAILED MOUNTING, INSTALLATION AND PROGRAMMING INSTRUCTIONS.
14) VOLTAGE DROP CALCULATIONS SHOWN ARE DERIVED FROM THE NAC CIRCUIT WITH THE LARGEST LOAD (AMPERAGE DRAW) PER LEVEL. ALL OTHER CIRCUITS WILL BE LIMITED TO THE MAXIMUM DISTANCE SHOWN.
15) ENSURE ALL SLC SHIELDS ARE CONTINUOUS AND GROUNDED AT THE FIRE ALARM PANEL OR FLOOR TERMINAL JUNCTION BOX ONLY.
16) SPRINKLER SYSTEM TAMPER SWITCH (APPROX. 28 EA.) MONITOR MODULES SHALL BE LOCATED IN THE FIELD AND SHOWN ON AS–BUILTS. USE AVAILABLE SPARE ADDRESSES FROM THE NEAREST AVAILABLE SLC LOOP.
17) ADDRESSABLE CONTROL RELAY MODULES SHALL BE INSTALLED WITHIN 3 FEET OF EQUIPMENT THEY CONTROL.

STAIRWELL PRESSURIZATION

A) NORMAL – STANDBY OPERATION
1. THE FIRE ALARM SYSTEM IS OPERATING AND IN STANDBY MODE.
2. THE GREEN LED "POWER" ON THE FCCP IS LIT INDICATING POWER IS AVAILABLE TO THE CONTROL SYSTEM.

B) ALARM MODE – STAIRWELL PRESSURIZATION
1. THE FOLLOWING HVAC UNITS ARE DE–ENERGIZED:
   HVAC UNITS – AC–8, AC–9 AND CF–17
   DAMPERS – CD–17 AND FSD–17
2. THE FOLLOWING HVAC UNITS ARE ENERGIZED AFTER A 10 SECOND DELAY:
   PRESSURE FAN CF–17A
   DAMPERS – FSD–17A WITH MODULATING OPERATOR DM–17A
   MOTOR OPERATOR DM–17B
   DIFFERENTIAL PRESSURE CONTROLLER PC–1 MODULATES DAMPER FSD–17A TO CONTROL STAIRWELL PRESSURE
   NOTE: UNIT IS AUTOMATICALLY SHUTDOWN IF SMOKE IS DETECTED AT AIR INTAKE

C) SYSTEM RESTORE
A) ACTIVATION OF THE RESET BUTTON SHALL CAUSE THE OUTPUTS OF ALL DEVICES TO RETURN TO THEIR NORMAL CONDITIONS. IF ANY CONDITION STILL EXISTS, OR REOCCURS, THE SYSTEM SHALL REVERT TO ITS PREDETERMINED SEQUENCE OF OPERATION.
B) UPON ACTIVATION OF A SUCCESSFUL SYSTEM RESET, THE SYSTEM SHALL EXTINGUISH ALL ALARMS, TROUBLE AND SUPERVISORY SIGNALS, AND MONITOR DEVICES UNDER NORMAL CONDITIONS.
C) LOG THE ALARM, TROUBLE, SUPERVISORY, OR MONITOR RESTORATION IN THE SYSTEM HISTORY BUFFER.

SMOKE PURGE OPERATION

A) NORMAL – STANDBY OPERATION
1. THE FIRE ALARM SYSTEM IS OPERATING AND IN STANDBY MODE.
2. THE GREEN LED "POWER" ON THE FCCP IS LIT INDICATING POWER TO THE CONTROL SYSTEM.

B) SMOKE PURGE MODE – STAIRWELL/CONTROL FLOOR
1. THE REMOTE CONTROL SMOKE EXHAUST KEYSWITCH IS PLACED IN THE "ON" POSITION BY AN AUTHORIZED AGENT.
2. THE STAIRWELL CONTROL IS SET TO AUTORUN UPON ANY ALARM ON THE FIRE ALARM & DETECTION SYSTEM.
3. THE STAIRWELL CONTROL SWITCH IS MONITORED BY AN INPUT MODULE LOCATED INTERNAL TO THE FCCP THAT SENSES THE SWITCH POSITION AND CAUSES THE FOLLOWING TO OPERATE:
   EXHAUST FAN CF–17 AND PRESSURE FAN CF–17A AND THEIR ASSOCIATED DAMPERS AND THE DIFFERENTIAL PRESSURE CONTROLS FOR MODULATING DAMPER FSD–17A ARE ENERGIZED.
   RETURN AIR DAMPERS IN AC–5, AC–6, AND AC–7 ARE CLOSED, THE OUTDOOR AIR DAMPERS, OUTDOOR AIR OPERABLE LOUVER AND EXHAUST OPERABLE LOUVER ARE OPENED ALONG WITH THE SMOKE EXHAUST DAMPERS CD–5A, CD–5B AND CD–6A.
   SMOKE EXHAUST FANS CF–7A, PF–5A AND PF–5B ARE ENERGIZED.
   IF THE SCADA ROOM HALON PURGE MODE IS ENERGIZED, CONTROL DAMPER CD–6A CLOSES UNTIL THE HALON PURGE MODE IS DE–ENERGIZED.
4. RETURN THE SYSTEM TO NORMAL OPERATION BY RESETTING THE FIRE ALARM & DETECTION SYSTEM AT THE FACP OR THE FCCP.

C) SMOKE PURGE MODE – HALON/SCADA PURGE
1. THE REMOTE CONTROL SMOKE EXHAUST KEYSWITCH IS PLACED IN THE "ON" POSITION BY AN AUTHORIZED AGENT.
2. THE CONTROL FLOOR CONTROL SWITCH IS PLACED IN THE "PURGE" POSITION BY AN AUTHORIZED AGENT.
3. THE CONTROL FLOOR CONTROL SWITCH IS MONITORED BY AN INPUT MODULE LOCATED INTERNAL TO THE FCCP THAT SENSES THE SWITCH POSITION AND CAUSES THE FOLLOWING TO OPERATE:
4. RETURN THE SYSTEM TO NORMAL OPERATION BY PLACING THE CONTROL FLOOR CONTROL SWITCH INTO THE "OFF" POSITION.

D) SMOKE PURGE MODE – OFFICE FLOOR
1. THE REMOTE CONTROL SMOKE EXHAUST KEYSWITCH IS PLACED IN THE "ON" POSITION BY AN AUTHORIZED AGENT.
2. THE OFFICE FLOOR CONTROL SWITCH IS PLACED IN THE "PURGE" POSITION BY AN AUTHORIZED AGENT.
3. THE OFFICE FLOOR CONTROL SWITCH IS MONITORED BY AN INPUT MODULE LOCATED INTERNAL TO THE FCCP THAT SENSES THE SWITCH POSITION AND CAUSES THE FOLLOWING TO OPERATE:
   RETURN AIR DAMPERS IN AC–8, AC–9 ARE CLOSED, THE OUTDOOR AIR DAMPERS AND OUTDOOR AIR OPERABLE LOUVER, EXHAUST AIR DAMPERS AND OPERABLE LOUVERS ON AC–8RE AND AC–9RE ARE OPEN, AND THE AC UNIT FANS ARE ON.
   NOTE: UNIT IS AUTOMATICALLY SHUTDOWN IF SMOKE IS DETECTED AT SUPPLY AIR DUCT DETECTORS
4. RETURN THE SYSTEM TO NORMAL OPERATION BY PLACING THE OFFICE FLOOR CONTROL SWITCH INTO THE "OFF" POSITION AND RESETTING FACP.

E) SMOKE PURGE MODE – GENERATOR FLOOR
1. THE REMOTE CONTROL SMOKE EXHAUST KEYSWITCH IS PLACED IN THE "ON" POSITION BY AN AUTHORIZED AGENT.
2. THE GENERATOR FLOOR PURGE IS SET TO AUTORUN UPON ANY ALARM FROM THE FIRE ALARM & DETECTION SYSTEM.
3. THE GENERATOR FLOOR CONTROL SWITCH IS MONITORED BY AN INPUT MODULE LOCATED INTERNAL TO THE FCCP THAT SENSES THE SWITCH POSITION AND CAUSES THE FOLLOWING TO OPERATE:
   RETURN AIR DAMPERS IN HV–1 THROUGH HV–8 ARE CLOSED, THE OUTDOOR AIR OPERABLE LOUVER BEHIND THE HV UNITS, THE HIGH BAY EXHAUST AIR OPERABLE LOUVERS NEAR THE CEILING ARE OPEN AND ALL ASSOCIATED PROPELLERS EXHAUST FANS IN THE GENERATOR ROOM AND MACHINE SHOP ARE ON.
   HV–9 THRU HV–11 ARE ENERGIZED TO IMPROVE AIR MIXING
4. RETURN THE SYSTEM TO NORMAL OPERATION BY RESETTING THE FIRE ALARM & DETECTION SYSTEM AT EITHER THE FACP OR THE FCCP.

SEQUENCE OF OPERATION

A) NORMAL – STANDBY OPERATION
1. THE GREEN POWER INDICATOR IS LIT ON THE MAIN FIRE CONTROL PANEL.
2. ALL ALARM (RED) AND TROUBLE (YELLOW) INDICATORS SHALL BE OFF.
3. THE MESSAGE ON THE LIQUID CRYSTAL DISPLAY (LCD) SHALL INDICATE "SYSTEM NORMAL."

B) ALARM CONDITIONS:
1. ACTIVATION OF ANY ALARM CAUSING DEVICE (PULL STATION, SMOKE DETECTOR, BEAM DETECTOR, OR TRI ALARM INPUT) WILL CAUSE THE FOLLOWING ACTIONS:
   A) ACTIVATION OF ALL VISUAL DEVICES.
   B) ACTIVATION OF ALL AUDIBLE DEVICES.
   C) ACTIVATION OF STAIRWELL PRESSURIZATION & SMOKE EXHAUST FANS TO OPERATE
   D) ALARM REPORTING DEVICE(S) ADDRESS DISPLAYED ON THE FACP LCD.
   E) ALARM AND AUDIBLE RED LED TO LIGHT ON THE FACP.
   F) FACP BUZZER TO SOUND.
   G) ALARM CONDITION TRANSFERRED TO ANNUNCIATION CIRCUIT.
   H) LOG THE ALARM CONDITION INTO THE SYSTEM HISTORY BUFFER.
   I) ACTIVATION OF ELEVATOR RECALL IF APPLICABLE
2. ACTIVATION OF HVAC DUCT DETECTOR:
   A) INITIATION OF THE ALARM SEQUENCE PER ITEM B, #1A, 1B AND 1C ONLY. NO FAN SHUTDOWN.

C) TROUBLE CONDITIONS:
UPON RECEIPT OF ANY TROUBLE CONDITION, INCLUDING: OPENS, SHORTS, GROUND FAULTS, COMMUNICATION ERRORS, WIRING DISARRANGEMENT, FIRE PUMP LOSS OF POWER, FIRE PUMP PHASE REVERSAL, FIRE PUMP RUNNING, OR TRI TROUBLE INPUT, THE SYSTEM SHALL:
   A) TROUBLE CONDITION DISPLAYED ON THE FACP LCD.
   B) THE TROUBLE LED (YELLOW) TO LIGHT ON THE FACP
   C) FACP BUZZER TO SOUND.
   D) LOG THE TROUBLE CONDITION INTO THE SYSTEM HISTORY BUFFER.

D) SUPERVISORY CONDITION: UPON RECEIPT OF A SUPERVISORY SIGNAL FROM ANY TAMPER SWITCH OF TRI SUPERVISORY INPUT, THE SYSTEM SHALL:
   A) SUPERVISORY CONDITION DISPLAYED ON THE FACP LCD.
   B) SUPERVISORY LED (YELLOW) TO LIGHT ON THE FACP
   C) FACP BUZZER TO SOUND .
   D) LOG THE SUPERVISORY CONDITION INTO THE SYSTEM HISTORY BUFFER.

E) SYSTEM RESET:
   A) ACTIVATION OF THE RESET BUTTON SHALL CAUSE THE OUTPUTS OF ALL DEVICES TO RETURN TO THEIR NORMAL CONDITIONS. IF ANY CONDITION STILL EXISTS, OR REOCCURS, THE SYSTEM SHALL REVERT TO ITS PREDETERMINED SEQUENCE OF OPERATION.
   B) UPON ACTIVATION OF A SUCCESSFUL SYSTEM RESET, THE SYSTEM SHALL EXTINGUISH ALL ALARMS, TROUBLE AND SUPERVISORY SIGNALS, AND MONITOR DEVICES UNDER NORMAL CONDITIONS.
   C) LOG THE ALARM, TROUBLE, SUPERVISORY, OR MONITOR RESTORATION IN THE SYSTEM HISTORY BUFFER.

F) PRIMARY POWER LOSS:
1) UPON LOSS OF PRIMARY POWER TO THE CONTROL PANEL, THE SYSTEM SHALL:
   A. CAUSE THE GREEN "POWER" LED ON THE FACP TO FLASH.
   B. CAUSE A TROUBLE CONDITION AS OUTLINED IN ITEM "C" (TROUBLE IN).
   C. TRANSFER THE POWER DRAW TO THE BACK UP BATTERIES.
2) UPON RESTORATION OF PRIMARY POWER TO THE CONTROL PANEL, AFTER A 60 SECOND DELAY, THE SYSTEM SHALL:
   A. CAUSE THE GREEN "POWER" LED TO REMAIN STEADY ON.
   B. CAUSE A TROUBLE CONDITION AS OUTLINED IN ITEM "C" (TROUBLE OUT).
   C. TRANSFER POWER DRAW BACK TO PRIMARY POWER.

ELEVATOR RECALL

1) THE ELEVATOR CONTROL PANEL(S) SHALL BE INTEGRATED INTO THE FIRE ALARM SYSTEM WITH THE USE OF ADDRESSABLE CONTROL RELAY MODULES AT THE TIE–IN POINTS AS SHOWN ON CONTRACT DRAWING 557–420–1797. THE TECHNICIAN INSTALLING THIS JOB SHALL INDICATE THE EXACT LOCATION OF THE ELEVATOR CONTROL PANELS AND THE ADDRESSABLE RELAY MODULES ON THE PLANS FOR INCORPORATION INTO THE AS–BUILT DRAWING SET.
   A. FIRE ALARM ANNUNCIATION
   o SMOKE DETECTOR IN ELEVATOR LOBBY - EACH FLR ANY ONE OF THE SMOKE DETECTORS WILL SOUND THE FIRE ALARM SYSTEM
   B. ELEVATOR RECALL (EMERGENCY MODE)
   o SMOKE DETECTOR IN ELEVATOR LOBBY-EACH FLOOR SMOKE DETECTORS ON FIRST FLOOR (LOBBY & MCHRY RM) WILL SIGNAL THE ELEVATOR CONTROLLER TO SEND THE ELEVATOR TO THE ALTERNATE FLOOR (SECOND FLOOR). ALL OTHER REMAINING SMOKE DETECTORS WILL SIGNAL THE ELEVATOR CONTROLLER TO SEND THE ELEVATOR TO THE PRIMARY FLOOR (FIRST FLOOR).

FOR INFORMATION ONLY

M2724

REVISIONS

No.	Date:	By	DESCRIPTION
0	6/25/04	MSG	Submit for Approval
1	6/13/05	MSG	AS-BUILT

AS-BUILT
6/13/05

GENERAL NOTES & OPERATIONAL NOTES OF THE FIRE DETECTION AND ALARM SYSTEM FOR GLEN CANYON DAM FIRE PROTECTION SYSTEM
800 Bureau Street Page, AZ 86040–1477

Hiller Systems Inc
FIRE DETECTION & SUPPRESSION DESIGNERS & INSTALLERS
833 PRINCIPAL LANE
CHESAPEAKE, VIRGINIA 23320
TEL: (757)-549-9123
FAX: (757)-549-1083

DESIGNED BY: MSG	DRAWN BY: MSG
CHECKED BY: RMF	REVISION No. 0
DATE: JUN 25, 2004	
DWG No. VM4070–01	SCALE: NONE

SHEET NUMBER 1 OF 31 TOTAL SHEETS
DATE OF ORIGINAL ISSUE JUN 25, 2004

JOB No. 4070	JOB CODE: VM

GLEN CANYON DAM
NOTIFICATION CKT LOADING TABLE

FLOOR & CIRCUIT NUMBER	ORIGINATES	AREA SERVED	USED (AMPS)	AVAIL (AMPS)	USED % (AMPS)
1102	FTJB# 8	EL. 3257.25	0.665	3.0	22.2%
1103	FTJB# 8	EL. 3257.25	0.665	3.0	22.2%
1104	FTJB# 8	EL. 3257.25	0.382	3.0	12.7%
1105	FTJB# 8	STAIRWELL	0.399	3.0	13.3%
1106	FTJB# 8	SPARE	0.000	3.0	0.00%
1107	FTJB# 8	SPARE	0.000	3.0	0.00%
1002	FTJB# 7	EL. 3244.24	0.665	3.0	22.2%
1003	FTJB# 7	EL. 3244.24	0.631	3.0	21.1%
1004	FTJB# 7	EL. 3244.24	0.648	3.0	21.6%
1005	FTJB# 7	EL. 3244.24	0.266	3.0	8.87%
1006	FTJB# 7	SPARE	0.000	3.0	0.00%
1007	FTJB# 7	SPARE	0.000	3.0	0.00%
0602	FTJB# 6	STAIRWELLS	0.532	3.0	17.7%
0603	FTJB# 6	SPARE	0.000	3.0	0.00%
0502	FTJB# 5	EL. 3188.50	0.614	3.0	20.5%
0503	FTJB# 5	EL. 3188.50	0.464	3.0	15.5%
0504	FTJB# 5	EL. 3188.50	0.498	3.0	16.6%
0505	FTJB# 5	EL. 3188.50	0.365	3.0	12.2%
0506	FTJB# 5	SPARE	0.000	3.0	0.00%
0507	FTJB# 5	SPARE	0.000	3.0	0.00%
0402	FTJB# 4	EL. 3168.50	0.597	3.0	19.9%
0403	FTJB# 4	EL. 3168.50	0.597	3.0	19.9%
0404	FTJB# 4	EL. 3168.50	0.580	3.0	19.3%
0405	FTJB# 4	EL. 3168.50	0.631	3.0	21.1%
0406	FTJB# 4	EL. 3168.50	0.339	3.0	11.3%
0407	FTJB# 4	EL. 3168.50	0.339	3.0	11.3%
0302	FTJB# 3	EL. 3153.50	0.597	3.0	19.9%
0303	FTJB# 3	EL. 3153.50	0.631	3.0	21.1%
0304	FTJB# 3	EL. 3153.50	0.614	3.0	20.5%
0305	FTJB# 3	EL. 3153.50	0.580	3.0	19.3%
0306	FTJB# 3	EL. 3153.50	0.580	3.0	19.3%
0307	FTJB# 3	SPARE	0.000	3.0	0.00%
0202	FTJB# 2	EL. 3138.50	0.464	3.0	15.5%
0203	FTJB# 2	EL. 3138.50	0.464	3.0	15.5%
0204	FTJB# 2	SPARE	0.000	3.0	0.00%
0205	FTJB# 2	SPARE	0.000	3.0	0.00%
0102	FTJB# 1	EL. 3124.75	0.464	3.0	15.5%
0103	FTJB# 1	EL. 3124.75	0.464	3.0	15.5%
0104	FTJB# 1	EL. 3124.75	0.399	3.0	13.3%
0105	FTJB# 1	EL. 3124.75	0.464	3.0	15.5%
0106	FTJB# 1	EL. 3124.75	0.464	3.0	15.5%
0107	FTJB# 1	SPARE	0.000	3.0	0.00%

DEVICE CURRENT DRAW CHART

RSS-24MCW-FR
(MULTI-CANDELA STROBE)

CANDELA RATING	CURRENT DRAW
15 cd	0.041 AMPS
30 cd	0.065 AMPS
75 cd	0.116 AMPS
110 cd	0.155 AMPS

AS-24MCW-FR
(MULTI-CANDELA HORN/STROBE)

CANDELA RATING	CURRENT DRAW
15 cd	0.065 AMPS
30 cd	0.088 AMPS
75 cd	0.133 AMPS
110 cd	0.179 AMPS

DEVICE NAMING LEGEND

M010101

- DEVICE NUMBER
- CKT NUMBER
- FLOOR NUMBER
- DEVICE TYPE:
  - M = MANUAL STATION
  - B = PROJECTED BEAM DETECTOR
  - I = IONIZATION TYPE SMOKE DETECTOR
  - T = THERMAL TYPE DETECTOR
  - DC = DAMPER CONTROL RELAY MODULE
  - F = FLAME TYPE DETECTOR
  - LT = LINEAR TYPE THERMAL DETECTOR
  - IM = ADDRESSABLE INPUT MODULE
  - CR = CONTROL RELAY MODULE
  - S = NOTIFICATION APPLIANCE - STROBE
  - HS = NOTIFICATION APPLIANCE - HORN/STROBE

WIRING LEGEND

- A - 2 COND, 18 AWG, TWISTED/SHIELDED, PLENUM
  SIGNALING LINE CIRCUIT (SLC) WIRING
- B - 2 COND, 14 AWG, SOLID, PLENUM
  NOTIFICATION APPLIANCE CIRCUIT (NAC) WIRING
- C - 3 COND, 12 AWG, SOLID
  120VAC, DOOR HOLDER WIRING
- D - 2 COND, 14 AWG, SOLID, PLENUM
  24VDC POWER TO CZM MODULE

EQUIPMENT LIST

MAIN FACP

No.	QUANTITY	PART No.	DESCRIPTION	MANUFACTURER
1	1	MMB-2	MAIN FACP BOARD	SIEMENS
2	1	MLE-KIT	FACP ENCLOSURE KIT	SIEMENS
3	1	MLE-CABLES	FACP INTERNAL CONNECTION CABLES	SIEMENS
4	2	MDB-1	ENCLOSURE DEAD FRONT PLATES	SIEMENS
5	1	MDL-1	ENCLOSURE PLEXIGLASS INSERT	SIEMENS
6	1	MOM-4	CARD CAGE EXPANSION MODULE	SIEMENS
7	1	ALD-2i	SLC LOOP EXPANDER MODULE	SIEMENS
8	1	NET-7	NETWORK INTERFACE MODULE	SIEMENS
9	1	MPS-12	FACP MAIN POWER TRANSFORMER	SIEMENS
10	1	CSM-4	MUNICIPAL TIE MODULE	SIEMENS
11	2	PS12180	12VDC, 18 A/H BATTERIES	POWERSONIC
12	1	CZM-4	CONVENTIONAL ZONE MODULE	SIEMENS

FLOOR TERMINAL JUNCTION BOX

No.	QUANTITY	PART No.	DESCRIPTION	MANUFACTURER
1	8	PSR-1	REMOTE SLC PWR SUPPLY & COMMS	SIEMENS
2	8	MPS-12	PSR POWER SUPPLY TRANSFORMER	SIEMENS
3	8	MOM-4	CARD CAGE EXPANSION MODULE	SIEMENS
4	21	PAD-3	NAC POWER SUPPLY	SIEMENS
5	8	C-SD483610	36X48X8 ENCLOSURE	HOFFMAN
6	6	NET-7M	NETWORK INTERFACE MODULE	SIEMENS
7	42	PS1270	12VDC, BATTERIES	POWERSONIC
8	16	PS12120	12VDC, BATTERIES	POWERSONIC
9	2	NET-7	NETWORK INTERFACE MODULE	SIEMENS

FIRE FIGHTERS COMMAND & CONTROL PANEL

No.	QUANTITY	PART No.	DESCRIPTION	MANUFACTURER
1	1	RSG-L-GR-GP4	GRAPHIC ANNUNCIATOR PANEL	KIRKLAND
2	1	PS-5A	ANN. POWER SUPPLY TRANSFORMER	SIEMENS
3	1	MOI-7	INTERFACE MODULE	SIEMENS
4	10	MOD-16	OUTPUT MODULE - LED's	SIEMENS
5	1	MID-16	INPUT MODULE	SIEMENS

REMOTE LCD ANNUNCIATOR

No.	QUANTITY	PART No.	DESCRIPTION	MANUFACTURER
1	1	RCC-1	REMOTE LED ANNUNCIATOR	SIEMENS

NOTIFICATION DEVICES

No.	QUANTITY	PART No.	DESCRIPTION	MANUFACTURER
1	53	AS-24MCW-FR	MULTICANDELA HORN/STROBE	WHEELOCKQ
2	78	RSS-24-MCW-FR	MULTICANDELA STROBE	WHEELOCK
3	23	DSM-12/24-R	SYNCHRONIZATION MODULE	WHEELOCK

INITIATING DEVICES

No.	QUANTITY	PART No.	DESCRIPTION	MANUFACTURER
1	60	MSI-20B	DUAL ACTION MANUAL PULL STATION	SIEMENS
2	124	ILI-1H	IONIZATION SMOKE DETECTOR	SIEMENS
3	117	DB-3S	DETECTOR BASE	SIEMENS
4	7	AD-3I	DUCT DETECTOR HOUSING	SIEMENS
5	7	RLI-2	REMOTE INDICATOR LAMP	SIEMENS
6	9	PBA-1191	BEAM DETECTOR PROJECTOR	SIEMENS
7	1	SS4-A/-2	FLAME DETECTOR CL 1, DIV 1	FIRE SENTRY
8	9	CZM-1B6	CONVENTIONAL ZONE MODULE	SIEMENS
9	120	TRI-R	ADDRESSABLE RELAY MODULE	SIEMENS
10	37	TRI-S	ADDRESSABLE SINGLE INPUT MODULE	SIEMENS
11	10	TRI-B6M	ADDRESSABLE MINI-INPUT MODULE	SIEMENS
12	10	TRI-D	ADDRESSABLE DUAL INPUT MODULE	SIEMENS
13	4	PBR-1193	REFLECTOR BASE	SIEMENS
14	10	PBR-1192	REFLECTOR BASE	SIEMENS
15	2	PBR-1191	REFLECTOR BASE	SIEMENS
16	11	PBB-1191	BEAM DETECTOR BASE	SIEMENS

LINEAR DETECTOR PANEL

No.	QUANTITY	PART No.	DESCRIPTION	MANUFACTURER
1	1	FS-2008	EIGHT ZONE LINEAR PANEL	PROTECTOWIRE
1	3000	PHSC-190-EPR	190 DEGREE EPR DETECTOR	PROTECTOWIRE
3	600	PC-2	DETECTOR MOUNTING CLIPS	PROTECTOWIRE
4	12	ZB-4-QC-MP	EOL/ZONE BOX	PROTECTOWIRE
5	2	PS1270	12VDC, 7/AH BATTERY	POWERSONIC
6	1	PWSC	PACKAGE OF 10 SPLICING KIT	PROTECTOWIRE

FOR INFORMATION ONLY

M2725

REVISIONS

No.	Date:	By	DESCRIPTION
1	6/20/05	MSG	Batch for approval
2	6/24/05	MSG	AS-BUILT

AS-BUILT
6/13/05

EQUIPMENT LIST AND NAC LOAD CHART OF THE FIRE DETECTION AND ALARM SYSTEM FOR GLEN CANYON DAM FIRE PROTECTION SYSTEM

800 Bureau Street
Page, AZ 86040-1477

Hiller Systems Inc
FIRE DETECTION & SUPPRESSION DESIGN & INSTALLATION
833 PRINCIPAL LANE
CHESAPEAKE, VIRGINIA 23320
TEL: (757)-549-9123
FAX: (757)-549-1083

DESIGNED BY: MSG	DRAWN BY: MSG
CHECKED BY: RMF	REVISION No. 0
DATE: JUN 25, 2004	
DWG No. YM4070-02	SCALE: NONE

SHEET NUMBER
2
OF 31 TOTAL SHEETS

DATE OF ORIGINAL ISSUE
JUN 25, 2004

JOB No. 4070	JOB CODE: YM

SEQUENCE OF OPERATION MATRIX

DEVICE ADDRESS	ALARM	TROUBLE	SUPERVISORY	STAIRWELL PRESS.	AHU SHUTDWON	RELAY CONTROL	ANNUNCIATION	SMOKE PURGE#1	SMOKE PURGE#2	SMOKE PURGE#3	SMOKE PURGE#4
IM110301		X					X				
I110306	X			X	X	X	X				
I110307	X			X	X	X	X				
I110308	X			X	X	X	X				
I110309	X			X	X	X	X				
I110310	X			X	X	X	X				
I110311	X			X	X	X	X				
I110312	X			X	X	X	X				
I110313	X			X	X	X	X				
I110314	X			X	X	X	X				
DI110319	X			X	X	X	X				
DI110320	X			X	X	X	X				
DI110321	X			X	X	X	X				
I110322	X			X	X	X	X				
CR110323						X					
CR110324						X					
CR110325						X					
CR110326						X					
I110327	X			X	X	X	X				
I110328	X			X	X	X	X				
I110329	X			X	X	X	X				
I110330	X			X	X	X	X				
I110331	X			X	X	X	X				
I110332	X			X	X	X	X				
I110333	X			X	X	X	X				
I110334	X			X	X	X	X				
I110335	X			X	X	X	X				
I110336	X			X	X	X	X				
M110401	X			X	X	X	X				
I110402	X			X	X	X	X				
I110403	X			X	X	X	X				
I110404	X			X	X	X	X				
I110405	X			X	X	X	X				
I110406	X			X	X	X	X				
I110407	X			X	X	X	X				
I110408	X			X	X	X	X				
I110410	X			X	X	X	X				
I110411	X			X	X	X	X				
I110412	X			X	X	X	X				
I110413	X			X	X	X	X				
I110414	X			X	X	X	X				
I110415	X			X	X	X	X				
I110416	X			X	X	X	X				
I110417	X			X	X	X	X				
I110418	X			X	X	X	X				
I110419	X			X	X	X	X				
I110420	X			X	X	X	X				
IM00501			X				X				
I100503	X			X	X	X	X				
I100504	X			X	X	X	X				
I100505	X			X	X	X	X				
I100506	X			X	X	X	X				
CR100507						X					
I100508	X			X	X	X	X				
I100509	X			X	X	X	X				
I100510	X			X	X	X	X				
I100511	X			X	X	X	X				
I100512	X			X	X	X	X				
I100513	X			X	X	X	X				
I100514	X			X	X	X	X				
M100515	X			X	X	X	X				
I100516	X			X	X	X	X				
I100518	X			X	X	X	X				
CR100519						X					
CR100520						X					
CR100521						X					
CR100522						X					

DEVICE ADDRESS	ALARM	TROUBLE	SUPERVISORY	STAIRWELL PRESS.	AHU SHUTDWON	RELAY CONTROL	ANNUNCIATION	SMOKE PURGE#1	SMOKE PURGE#2	SMOKE PURGE#3	SMOKE PURGE#4
I100523	X			X	X	X	X				
DI100524	X			X	X	X	X				
DC100525						X					
CR100526						X					
CR100527						X					
DI100528	X			X	X	X	X				
DI100529	X			X	X	X	X				
I100530	X			X	X	X	X				
DI100531	X			X	X	X	X				
DC100537						X					
DC100538						X					
IM100539		X					X				
IM100540		X					X				
I100606	X			X	X	X	X				
I100607	X			X	X	X	X				
I100610	X			X	X	X	X				
I100611	X			X	X	X	X				
I100612	X			X	X	X	X				
I100613	X			X	X	X	X				
I100614	X			X	X	X	X				
I100615	X			X	X	X	X				
M100616	X			X	X	X	X				
I100617	X			X	X	X	X				
I100618	X			X	X	X	X				
I100619	X			X	X	X	X				
I100620	X			X	X	X	X				
M100621	X			X	X	X	X				
I100622	X			X	X	X	X				
I100623	X			X	X	X	X				
I100624	X			X	X	X	X				
M100625	X			X	X	X	X				
I100626	X			X	X	X	X				
IM070701		X					X				
I060702	X			X	X	X	X				
I060703	X			X	X	X	X				
M060705	X			X	X	X	X				
I060706	X			X	X	X	X				
I060708	X			X	X	X	X				
I060709	X			X	X	X	X				
DH060710						X					
M060711	X			X	X	X	X				
I060712	X			X	X	X	X				
I060714	X			X	X	X	X				
I060715	X			X	X	X	X				
DH060716						X					
M060717	X			X	X	X	X				
I060718	X			X	X	X	X				
I060720	X			X	X	X	X				
I060721	X			X	X	X	X				
DH060722						X					
M060723	X			X	X	X	X				
I060724	X			X	X	X	X				
I040726	X			X	X	X	X				
I040727	X			X	X	X	X				
I050729	X			X	X	X	X				
I050730	X			X	X	X	X				
I100731	X			X	X	X	X				
I100732	X			X	X	X	X				
DH100733						X					
M100734	X			X	X	X	X				
I100735	X			X	X	X	X				
I110736	X			X	X	X	X				
I110737	X			X	X	X	X				
I110739	X			X	X	X	X				
DH110740						X					
M110741	X			X	X	X	X				
I110742	X			X	X	X	X				

DEVICE ADDRESS	ALARM	TROUBLE	SUPERVISORY	STAIRWELL PRESS.	AHU SHUTDWON	RELAY CONTROL	ANNUNCIATION	SMOKE PURGE#1	SMOKE PURGE#2	SMOKE PURGE#3	SMOKE PURGE#4
I110743	X			X	X	X	X				
M110744	X			X	X	X	X				
I050745	X			X	X	X	X				
I050746	X			X	X	X	X				
M110747	X			X	X	X	X				
CR110748						X					
DC110749						X					
CR110750						X					
DC110751						X					
CR110752						X					
DH110753						X					
CR110754						X					
IM110757		X					X				
IM110758		X					X				
IM050901		X					X				
I050902	X			X	X	X	X				
M050903	X			X	X	X	X				
I050904	X			X	X	X	X				
I050905	X			X	X	X	X				
M050906	X			X	X	X	X				
I050907	X			X	X	X	X				
I050908	X			X	X	X	X				
I050909	X			X	X	X	X				
I050910	X			X	X	X	X				
I050911	X			X	X	X	X				
M050912	X			X	X	X	X				
I050913	X			X	X	X	X				
M050914	X			X	X	X	X				
B050917	X			X	X	X	X				
B050918	X			X	X	X	X				
M050919	X			X	X	X	X				
B050920	X			X	X	X	X				
B050921	X			X	X	X	X				
M050926	X			X	X	X	X				
M050931	X			X	X	X	X				
CR050932						X					
CR050933						X					
CR050934						X					
CR050935						X					
CR050936						X					
CR050939						X					
B050942	X			X	X	X	X				
M050943	X			X	X	X	X				
B050944	X			X	X	X	X				
I050945	X			X	X	X	X				
CR050946						X					
I050950	X			X	X	X	X				
IM041101		X					X				
M041102	X			X	X	X	X				
I041103	X			X	X	X	X				
M041104	X			X	X	X	X				
M041105	X			X	X	X	X				
M041106	X			X	X	X	X				
M041107	X			X	X	X	X				
F041108						X					
CR041109						X					
CR041110						X					
I041111	X			X	X	X	X				
I041112	X			X	X	X	X				
I041113	X			X	X	X	X				
I041114	X			X	X	X	X				
I041115	X			X	X	X	X				
DC041116						X					
M041117	X			X	X	X	X				
M041118	X			X	X	X	X				
M041119	X			X	X	X	X				
DC041120						X					

DEVICE ADDRESS	ALARM	TROUBLE	SUPERVISORY	STAIRWELL PRESS.	AHU SHUTDWON	RELAY CONTROL	ANNUNCIATION	SMOKE PURGE#1	SMOKE PURGE#2	SMOKE PURGE#3	SMOKE PURGE#4
CR041130						X					
CR041131						X					
CR041132						X					
CR041133						X					
CR041134						X					
CR041135						X					
CR041136						X					
CR041137						X					
DC041138						X					
CR041139						X					
IM041140		X					X				
IM041141		X					X				
DC031301						X					
IM031302	X			X	X	X	X				
CR031304						X					
DC031308						X					
CR031309						X					
CR031313						X					
DC031314						X					
CR031318						X					
DC031319						X					
M031320	X			X	X	X	X				
M031321	X			X	X	X	X				
DC031322						X					
M031324	X			X	X	X	X				
CR031325						X					
I031326	X			X	X	X	X				
M031327	X			X	X	X	X				
M031328	X			X	X	X	X				
CR031329						X					
DC031330						X					
DC031331						X					
M031332	X			X	X	X	X				
I031335	X			X	X	X	X				
I031336	X			X	X	X	X				
I031337	X			X	X	X	X				
I031338	X			X	X	X	X				
I031339	X			X	X	X	X				
I031340	X			X	X	X	X				
I031341	X			X	X	X	X				
I031342	X			X	X	X	X				
I031343	X			X	X	X	X				
I031344	X			X	X	X	X				
I031345	X			X	X	X	X				
I031346	X			X	X	X	X				
I031347	X			X	X	X	X				
I031348	X			X	X	X	X				
I031349	X			X	X	X	X				
CR031350						X					
I031358	X			X	X	X	X				
IM041160			X				X				
CR031401						X					
DC031402						X					
DC031403						X					
CR031404						X					
DC031405						X					
DC031406						X					
M031407	X			X	X	X	X				
CR031408						X					
I031409	X			X	X	X	X				
CR031410						X					
DC031411						X					
DC031412						X					
CR031413						X					
DC031414						X					
DC031415						X					
CR031416						X					
I031417	X			X	X	X	X				

DEVICE ADDRESS	ALARM	TROUBLE	SUPERVISORY	STAIRWELL PRESS.	AHU SHUTDWON	RELAY CONTROL	ANNUNCIATION	SMOKE PURGE#1	SMOKE PURGE#2	SMOKE PURGE#3	SMOKE PURGE#4
CR031418						X					
DC031419						X					
DC031420						X					
M031421	X			X	X	X	X				
CR031422						X					
DC031424						X					
M031425	X			X	X	X	X				
M031426	X			X	X	X	X				
M031427	X			X	X	X	X				
M031429	X			X	X	X	X				
CR301430						X					
M031431	X			X	X	X	X				
M031432	X			X	X	X	X				
M031433	X			X	X	X	X				
M031434	X			X	X	X	X				
I031435	X			X	X	X	X				
M031436	X			X	X	X	X				
M031437	X			X	X	X	X				
IM031438		X					X				
IM031439		X					X				
IM031440	X						X				
IM031441	X						X				
IM031442	X						X				
IM031443	X						X				
IM031444	X						X				
IM031445	X						X				
IM031446	X						X				
IM031447	X						X				
CR301448						X					
CR301449						X					
I031450	X			X	X	X	X				
I031451	X			X	X	X	X				
I031452	X			X	X	X	X				
CR301453						X					
CR301454						X					
CR301455						X					
CR301456						X					
CR301457						X					
M031458	X			X	X	X	X				
TS031459		X					X				
TS031460		X					X				
M021501	X			X	X	X	X				
M021502	X			X	X	X	X				
M021503	X			X	X	X	X				
M021504	X			X	X	X	X				
I021505	X			X	X	X	X				
TS021506		X					X				
TS021507		X					X				
TS021508		X					X				
TS021509		X					X				
TS021510		X					X				
TS021511		X					X				
TS021512		X					X				
TS021513		X					X				
TS021514		X					X				
TS021515		X					X				
TS021516		X					X				
TS021517		X					X				
TS021518		X					X				
TS021519		X					X				
TS021520		X					X				
TS021521		X					X				
TS021522		X					X				
TS021523		X					X				
TS021524		X					X				
TS021525		X					X				
TS021526		X					X				
TS021527		X					X				

DEVICE ADDRESS	ALARM	TROUBLE	SUPERVISORY	STAIRWELL PRESS.	AHU SHUTDWON	RELAY CONTROL	ANNUNCIATION	SMOKE PURGE#1	SMOKE PURGE#2	SMOKE PURGE#3	SMOKE PURGE#4
TS021528		X					X				
TS021529		X					X				
TS021530		X					X				
M011701	X			X	X	X	X				
M011702	X			X	X	X	X				
M011703	X			X	X	X	X				
M011704	X			X	X	X	X				
IM011705		X					X				
B011706	X			X	X	X	X				
DC011708						X					
B011709	X			X	X	X	X				
DC011710						X					
B011711	X			X	X	X	X				
M011713	X			X	X	X	X				
I011714	X			X	X	X	X				
M011715	X			X	X	X	X				
M011716	X			X	X	X	X				
M011717	X			X	X	X	X				
M011718	X			X	X	X	X				
I011719	X			X	X	X	X				
I011720	X			X	X	X	X				
TS011721		X					X				
CR011722						X					
CR011723						X					

FOR INFORMATION ONLY

M2726

REVISIONS

No.	Date:	By	DESCRIPTION
0	6/25/04	MSG	Submit for Approval
1	6/13/05	MSG	AS-BUILT

AS-BUILT
6/13/05

SEQUENCE OF OPERATIONS MATRIX
OF THE
FIRE DETECTION
AND ALARM SYSTEM
FOR
GLEN CANYON DAM
FIRE PROTECTION SYSTEM
800 Bureau Street
Page, AZ 86040-1477

Hiller Systems Inc
FIRE DETECTION & SUPPRESSION
DESIGNERS & INSTALLERS
833 PRINCIPAL LANE
CHESAPEAKE, VIRGINIA 23320
TEL: (757)-549-9123
FAX: (757)-549-1083

DESIGNED BY: MSG | DRAWN BY: MSG
CHECKED BY: RMF | REVISION No. 0
DATE: JUN 25, 2004
DWG No. VM4070-03 | SCALE: NONE

SHEET NUMBER
3
OF 31 TOTAL SHEETS
DATE OF ORIGINAL ISSUE
JUN 25, 2004

JOB No. 4070 | JOB CODE: VM

SYSTEM RISER DIAGRAM

ELEVATIONS 3262.87 & 3279.12
ELEVATIONS 3262.87 & 3279.12

NAC CKT #1205 RETURN
SLC CKT #1104 RETURN
NAC CKT #1205 FEED
NAC CKT #1104 RETURN
NAC CKT #1104 FEED
NAC CKT #1103 RETURN
NAC CKT #1103 FEED
NAC CKT #1102 RETURN
NAC CKT #1102 FEED
4B
FTJB8
EOL
COMM "A"
2A
C
120VAC
FED FROM
LCH
SLC CKT #1104 FEED
SLC CKT #1103 RETURN
SLC CKT #1103 FEED

LEVEL 9
ELEVATION 3257.25

A,B
2A,B
MXL
120VAC
A,B

NAC CKT #1005 RETURN
NAC CKT #1005 FEED
NAC CKT #1004 RETURN
NAC CKT #1004 FEED
NAC CKT #1003 RETURN
NAC CKT #1003 FEED
NAC CKT #1002 RETURN
NAC CKT #1002 FEED
4B
FTJB7
2A
C
120VAC
FED FROM
LCH
SLC CKT #1006 RETURN
SLC CKT #1006 FEED
SLC CKT #1005 RETURN
SLC CKT #1005 FEED

LEVEL 8
ELEVATION 3244.24

2A,B
A,B
FTJB6
A
C
120VAC
FED FROM
LCH
SLC CKT #0608 SPARE
SLC CKT #0608 SPARE
SLC CKT #0607 RETURN
SLC CKT #0607 FEED
NAC CKT #0602 RETURN
NAC CKT #0602 FEED
1B

LEVEL 7
ELEVATIONS 3199.79, 3211, 3222 & 3233

2A,B
ANN
2A
FCCP
2A
2A
B
NAC CKT #0407 RETURN
NAC CKT #0407 FEED
NAC CKT #0406 RETURN
NAC CKT #0406 FEED
NAC CKT #0405 RETURN
NAC CKT #0405 FEED
NAC CKT #0404 RETURN
NAC CKT #0404 FEED
NAC CKT #0403 RETURN
NAC CKT #0403 FEED
NAC CKT #0402 RETURN
NAC CKT #0402 FEED
6B
FTJB4
A
C
120VAC
FED FROM
LB2
SLC CKT #0412 SPARE
SLC CKT #0412 SPARE
SLC CKT #0411 RETURN
SLC CKT #0411 FEED
NAC CKT #0505 RETURN
NAC CKT #0505 FEED
NAC CKT #0504 RETURN
NAC CKT #0504 FEED
NAC CKT #0503 RETURN
NAC CKT #0503 FEED
NAC CKT #0502 RETURN
NAC CKT #0502 FEED
4B
FTJB5
2A
C
120VAC
FED FROM
LB2
SLC CKT #0510 RETURN
SLC CKT #0510 FEED
SLC CKT #0509 RETURN
SLC CKT #0509 FEED

LEVEL 3
ELEVATIONS 3188.50

A,B

LEVEL 2
ELEVATIONS 3168.50

2A,B
NAC CKT #0306 RETURN
NAC CKT #0306 FEED
NAC CKT #0305 RETURN
NAC CKT #0305 FEED
NAC CKT #0304 RETURN
NAC CKT #0304 FEED
NAC CKT #0303 RETURN
NAC CKT #0303 FEED
NAC CKT #0302 RETURN
NAC CKT #0302 FEED
5B
FTJB3
2A
C
120VAC
FED FROM
LB2
SLC CKT #0314 RETURN
SLC CKT #0314 FEED
SLC CKT #0313 RETURN
SLC CKT #0313 FEED

MONITOR MODULES
TO REPORT TO FACP
MM
MM
MM
MM
MM
MM
LT
ZONE #6
ZONE #5
ZONE #4
ZONE #3
ZONE #2
ZONE #1
LINEAR DETECTOR
ZONES TO CABLE TRAYS

LEVEL 1
ELEVATIONS 3153.50

2A,B
A,B
NAC CKT #0205 RETURN
NAC CKT #0205 FEED
NAC CKT #0204 RETURN
NAC CKT #0204 FEED
NAC CKT #0203 RETURN
NAC CKT #0203 FEED
NAC CKT #0202 RETURN
NAC CKT #0202 FEED
4B
FTJB2
A
C
120VAC
FED FROM
LB2
SLC CKT #0216 SPARE
SLC CKT #0216 SPARE
SLC CKT #0215 RETURN
SLC CKT #0215 FEED

LEVEL A
ELEVATIONS 3138.50

2A,B
NAC CKT #0106 RETURN
NAC CKT #0106 FEED
NAC CKT #0105 RETURN
NAC CKT #0105 FEED
NAC CKT #0104 RETURN
NAC CKT #0104 FEED
NAC CKT #0103 RETURN
NAC CKT #0103 FEED
NAC CKT #0102 RETURN
NAC CKT #0102 FEED
5B
FTJB1
EOL
COMM "B"
A
C
120VAC
FED FROM
LB2
SLC CKT #0118 SPARE
SLC CKT #0118 SPARE
SLC CKT #0117 RETURN
SLC CKT #0117 FEED
A,B

NOTE:
EXACT DEVICE LOCATION
& WIRING REQUIREMENTS
ARE SHOWN ON SHEETS 4
THRU 12

FOR INFORMATION ONLY

LEVEL B
ELEVATIONS 3124.50

M2727

REVISIONS

No.	Date	By	DESCRIPTION
1	6/25/05	MSG	Sketch for approval
2	6/27/05	MSG	AS-BUILT

AS-BUILT
6/13/05

SYSTEM RISER DIAGRAM
OF THE
FIRE DETECTION
AND ALARM SYSTEM
FOR
GLEN CANYON DAM
FIRE PROTECTIONS SYSTEM
805 Bureau Street
Page, AZ 86040-1477

FIRE DETECTION & SUPPRESSION
DESIGN ENGINEERS & CONSULTANTS
Hiller Systems Inc
833 PRINCIPAL LANE
CHESAPEAKE, VIRGINIA 23320
TEL: (757)-549-9123
FAX: (757)-549-1083

DESIGNED BY: MSG	DRAWN BY: MSG
CHECKED BY: RMF	REVISION No. 0
DATE: JUN 25, 2004	
DWG No.: VM4070-04	SCALE: NONE

SHEET NUMBER
4
OF 31 TOTAL SHEETS
DATE OF ORIGINAL ISSUE
JUN 25, 2004

JOB No.: 4070 JOB CODE: VM

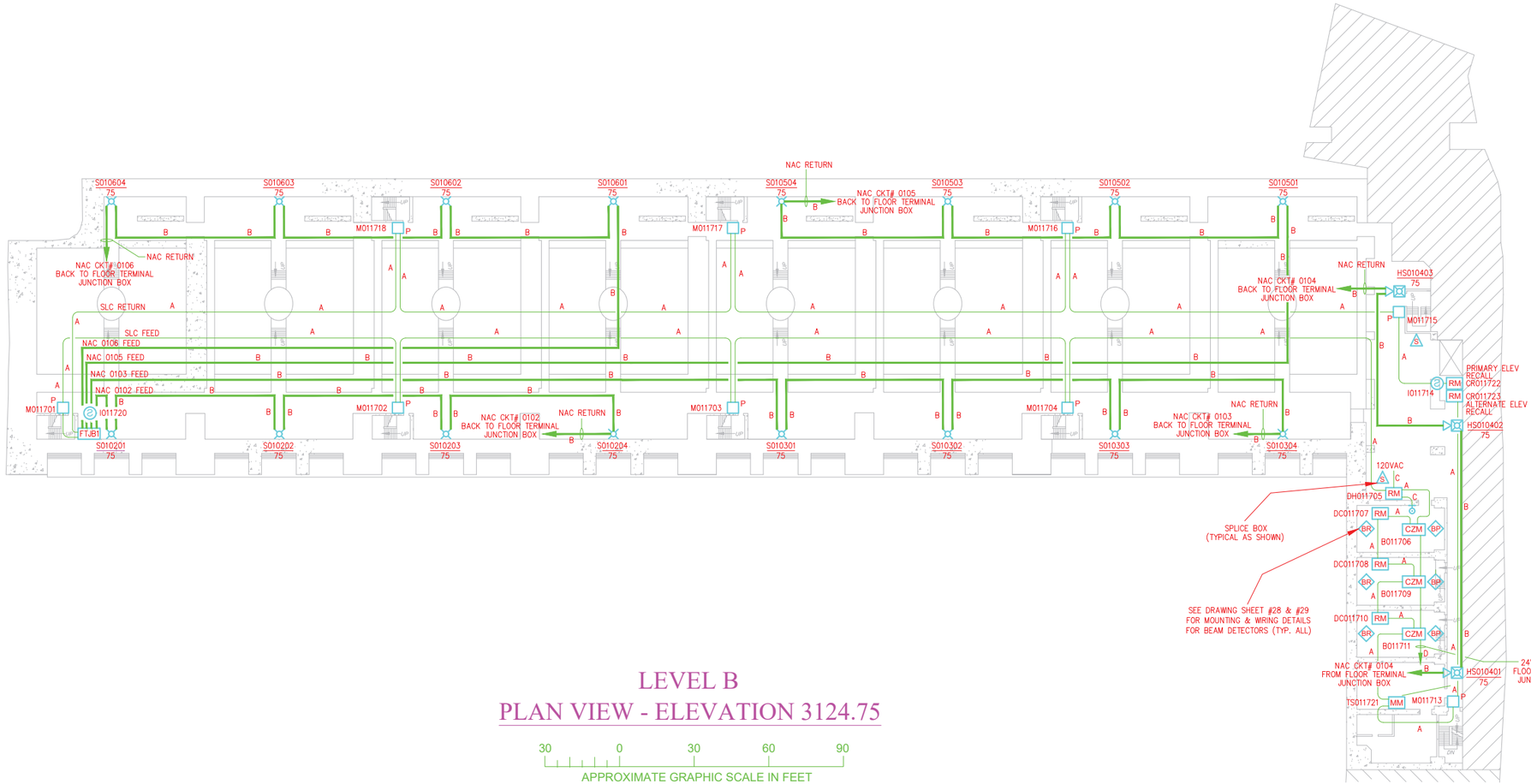

LEVEL B
PLAN VIEW - ELEVATION 3124.75

30 0 30 60 90

APPROXIMATE GRAPHIC SCALE IN FEET

DEVICE NAMING LEGEND

M010101

- DEVICE NUMBER
- CKT NUMBER
- FLOOR NUMBER
- DEVICE TYPE:
  - M = MANUAL STATION
  - B = PROJECTED BEAM DETECTOR
  - I = IONIZATION TYPE SMOKE DETECTOR
  - T = THERMAL TYPE DETECTOR
  - DC = DAMPER CONTROL RELAY MODULE
  - F = FLAME TYPE DETECTOR
  - LT = LINEAR TYPE THERMAL DETECTOR
  - IM = ADDRESSABLE INPUT MODULE
  - CR = CONTROL RELAY MODULE
  - S = NOTIFICATION APPLIANCE – STROBE
  - HS = NOTIFICATION APPLIANCE – HORN/STROBE

WIRING LEGEND

- A – 2 COND, 18 AWG, TWISTED/SHIELDED, PLENUM SIGNALING LINE CIRCUIT (SLC) WIRING
- B – 2 COND, 14 AWG, SOLID, PLENUM NOTIFICATION APPLIANCE CIRCUIT (NAC) WIRING
- C – 3 COND, 12 AWG, SOLID 120VAC, DOOR HOLDER WIRING
- D – 2 COND, 14 AWG, SOLID, PLENUM 24VDC POWER TO CZM MODULE

ELEVATION 3124.75
NOTIFICATION CKT LOADING TABLE

FLOOR & CIRCUIT NUMBER	ORIGINATES	AREA SERVED	USED (AMPS)	AVAIL (AMPS)	USED % (AMPS)
0102	FTJB# 1	EL. 3124.75	0.464	3.0	15.5%
0103	FTJB# 1	EL. 3124.75	0.464	3.0	15.5%
0104	FTJB# 1	EL. 3124.75	0.399	3.0	13.3%
0105	FTJB# 1	EL. 3124.75	0.464	3.0	15.5%
0106	FTJB# 1	EL. 3124.75	0.464	3.0	15.5%
0107	FTJB# 1	SPARE	0.000	3.0	0.00%

NOTIFICATION CIRCUIT MAXIMUM WIRE DISTANCE

$$R_1 = \frac{V_1 - V_2}{A} \qquad D = \frac{R_1}{R_2}$$

WHERE:
- D = MAXIMUM CIRCUIT DISTANCE
- A = TOTAL CURRENT DRAW
- V_1 = OUTPUT FROM FACP
- V_2 = MAX VOLTAGE DROP (10%)
- R_1 = MAX ALLOWABLE RESISTANCE
- R_2 = WIRE RESISTANCE (14AWG WIRE)

$$R_1 = \frac{24.0\ \text{VDC} - 21.6\ \text{VDC}}{0.464\ \text{AMPS}} \qquad D = \frac{5.1724}{.00314}$$

$$R_1 = 5.1724$$

D = 1647 FT

MAXIMUM NAC CIRCUIT LENGTH

FOR INFORMATION ONLY

M2728

REVISIONS

NO.	DESCRIPTION	BY	DATE
1	ADDED SHEET #5	MSG	6/13/05

AS-BUILT
6/13/05

DEVICE LOCATION & WIRING OF THE FIRE DETECTION AND ALARM SYSTEM FOR GLEN CANYON DAM FIRE PROTECTION SYSTEM

Page, AZ 86040-1477

805 Burgess Street

Hiller Systems Inc
FIRE DETECTION & SUPPRESSION DESIGNERS & INSTALLERS
833 PRINCIPAL LANE
CHESAPEAKE, VIRGINIA 23320
TEL: (757)-549-9123
FAX: (757)-549-1083

DESIGNED BY: MSG	DRAWN BY: MWM
CHECKED BY: RMF	REVISION No. 0
DATE: JUN 25, 2004	
DWG No. VM4070-05	SCALE: AS SHOWN

SHEET NUMBER

5

OF 31 TOTAL SHEETS

DATE OF ORIGINAL ISSUE
JUN 25, 2004

JOB No. 4070 | JOB CODE: VM

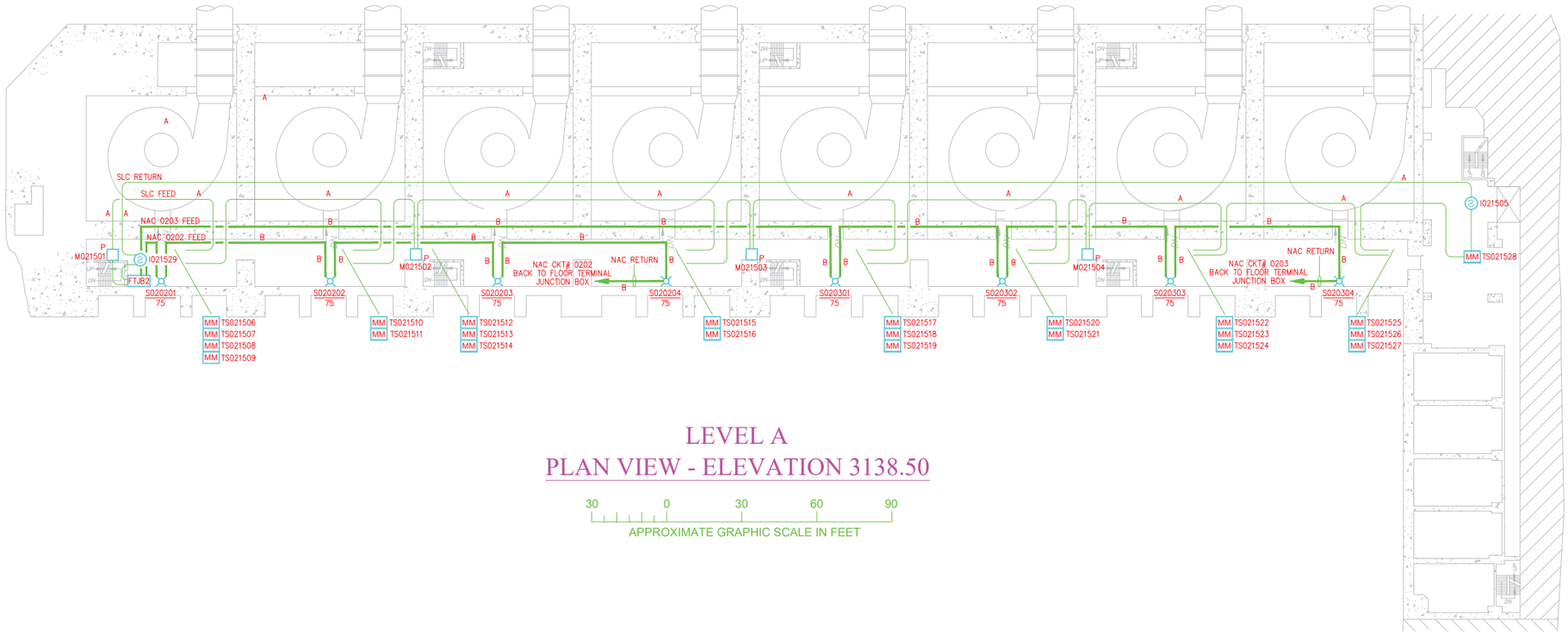

LEVEL A
PLAN VIEW - ELEVATION 3138.50

30 0 30 60 90

APPROXIMATE GRAPHIC SCALE IN FEET

DEVICE NAMING LEGEND

M010101

- DEVICE NUMBER
- CKT NUMBER
- FLOOR NUMBER
- DEVICE TYPE:
  - M = MANUAL STATION
  - B = PROJECTED BEAM DETECTOR
  - I = IONIZATION TYPE SMOKE DETECTOR
  - T = THERMAL TYPE DETECTOR
  - DC = DAMPER CONTROL RELAY MODULE
  - F = FLAME TYPE DETECTOR
  - LT = LINEAR TYPE THERMAL DETECTOR
  - IM = ADDRESSABLE INPUT MODULE
  - CR = CONTROL RELAY MODULE
  - S = NOTIFICATION APPLIANCE – STROBE
  - HS = NOTIFICATION APPLIANCE – HORN/STROBE

WIRING LEGEND

- A – 2 COND, 18 AWG, TWISTED/SHIELDED, PLENUM
  SIGNALING LINE CIRCUIT (SLC) WIRING
- B – 2 COND, 14 AWG, SOLID, PLENUM
  NOTIFICATION APPLIANCE CIRCUIT (NAC) WIRING
- C – 3 COND, 12 AWG, SOLID
  120VAC, DOOR HOLDER WIRING
- D – 2 COND, 14 AWG, SOLID, PLENUM
  24VDC POWER TO CZM MODULE

ELEVATION 3138.50
NOTIFICATION CKT LOADING TABLE

FLOOR & CIRCUIT NUMBER	ORIGINATES	AREA SERVED	USED (AMPS)	AVAIL (AMPS)	USED % (AMPS)
0202	FTJB# 2	EL. 3138.50	0.464	3.0	15.5%
0203	FTJB# 2	EL. 3138.50	0.464	3.0	15.5%
0204	FTJB# 2	SPARE	0.000	3.0	0.00%
0205	FTJB# 2	SPARE	0.000	3.0	0.00%

NOTIFICATION CIRCUIT
MAXIMUM WIRE DISTANCE

$$R_1 = \frac{V_1 - V_2}{A}$$

$$D = \frac{R_1}{R_2}$$

WHERE:
- D = MAXIMUM CIRCUIT DISTANCE
- A = TOTAL CURRENT DRAW
- V_1 = OUTPUT FROM FACP
- V_2 = MAX VOLTAGE DROP (10%)
- R_1 = MAX ALLOWABLE RESISTANCE
- R_2 = WIRE RESISTANCE (14AWG WIRE)

$$R_1 = \frac{24.0\ \text{VDC} - 21.6\ \text{VDC}}{0.464\ \text{AMPS}}$$

$$R_1 = 5.1724$$

$$D = \frac{5.1724}{.00314}$$

$$\boxed{D = 1647\ \text{FT}}$$

MAXIMUM NAC CIRCUIT LENGTH

FOR INFORMATION ONLY

M2729

REVISIONS

No.	Date:	By:	DESCRIPTION
0	6/25/04	MSG	Submit for Approval
1	6/13/05	MSG	AS-BUILT

AS-BUILT
6/13/05

DEVICE LOCATION & WIRING
OF THE
FIRE DETECTION
AND ALARM SYSTEM
FOR
GLEN CANYON DAM
FIRE PROTECTION SYSTEM
805 Bureau Street Page, AZ 86040-1477

Hiller Systems Inc
FIRE DETECTION & SUPPRESSION DESIGNERS & INSTALLERS
833 PRINCIPAL LANE
CHESAPEAKE, VIRGINIA 23320
TEL: (757)-549-9123
FAX: (757)-549-1083

DESIGNED BY: MSG	DRAWN BY: MMM
CHECKED BY: RMF	REVISION No. 0
DATE: JUN 25, 2004	
DWG No. VM4070-06	SCALE: AS SHOWN

SHEET NUMBER
6
OF 31 TOTAL SHEETS
DATE OF ORIGINAL ISSUE
JUN 25, 2004

JOB No. 4070 | JOB CODE: VM

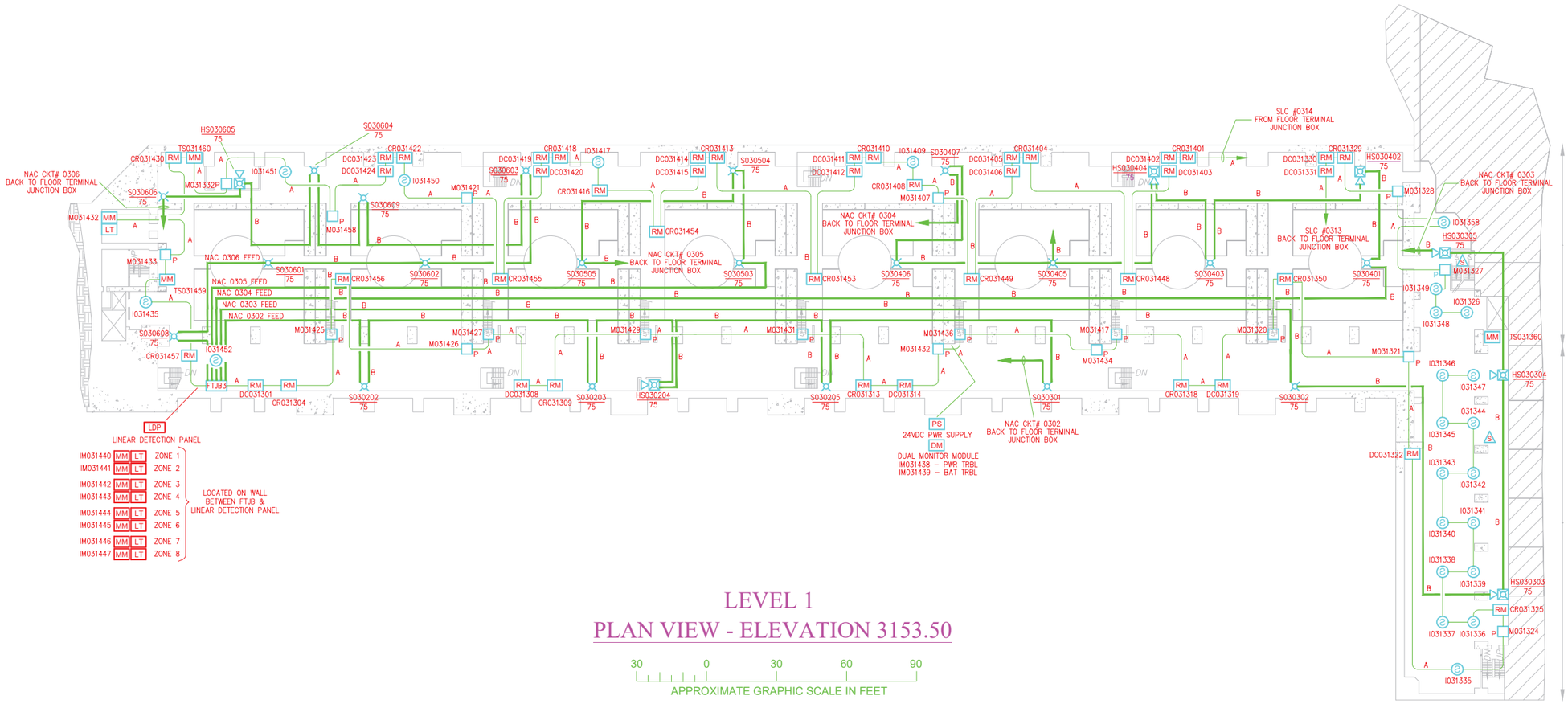

LEVEL 1
PLAN VIEW - ELEVATION 3153.50

30 0 30 60 90

APPROXIMATE GRAPHIC SCALE IN FEET

DEVICE NAMING LEGEND

M010101

- DEVICE NUMBER
- CKT NUMBER
- FLOOR NUMBER
- DEVICE TYPE:
  - M = MANUAL STATION
  - B = PROJECTED BEAM DETECTOR
  - I = IONIZATION TYPE SMOKE DETECTOR
  - T = THERMAL TYPE DETECTOR
  - DC = DAMPER CONTROL RELAY MODULE
  - F = FLAME TYPE DETECTOR
  - LT = LINEAR TYPE THERMAL DETECTOR
  - IM = ADDRESSABLE INPUT MODULE
  - CR = CONTROL RELAY MODULE
  - S = NOTIFICATION APPLIANCE – STROBE
  - HS = NOTIFICATION APPLIANCE – HORN/STROBE

WIRING LEGEND

- A – 2 COND, 18 AWG, TWISTED/SHIELDED, PLENUM
  SIGNALING LINE CIRCUIT (SLC) WIRING
- B – 2 COND, 14 AWG, SOLID, PLENUM
  NOTIFICATION APPLIANCE CIRCUIT (NAC) WIRING
- C – 3 COND, 12 AWG, SOLID
  120VAC, DOOR HOLDER WIRING
- D – 2 COND, 14 AWG, SOLID, PLENUM
  24VDC POWER TO CZM MODULE

ELEVATION 3153.50
NOTIFICATION CKT LOADING TABLE

FLOOR & CIRCUIT NUMBER	ORIGINATES	AREA SERVED	USED (AMPS)	AVAIL (AMPS)	USED % (AMPS)
0302	FTJB# 3	EL. 3153.50	0.597	3.0	19.9%
0303	FTJB# 3	EL. 3153.50	0.631	3.0	21.1%
0304	FTJB# 3	EL. 3153.50	0.614	3.0	20.5%
0305	FTJB# 3	EL. 3153.50	0.580	3.0	19.3%
0306	FTJB# 3	EL. 3153.50	0.580	3.0	19.3%
0307	FTJB# 3	SPARE	0.000	3.0	0.00%

NOTIFICATION CIRCUIT
MAXIMUM WIRE DISTANCE

$$R_1 = \frac{V_1 - V_2}{A}$$

$$D = \frac{R_1}{R_2}$$

WHERE:
D = MAXIMUM CIRCUIT DISTANCE
A = TOTAL CURRENT DRAW
V_1 = OUTPUT FROM FACP
V_2 = MAX VOLTAGE DROP (10%)
R_1 = MAX ALLOWABLE RESISTANCE
R_2 = WIRE RESISTANCE (14AWG WIRE)

$$R_1 = \frac{24.0\ VDC - 21.6\ VDC}{0.631\ AMPS}$$

$$R_1 = 3.8034$$

$$D = \frac{3.8034}{.00314}$$

D = 1211 FT

MAXIMUM NAC CIRCUIT LENGTH

FOR INFORMATION ONLY

M2730

REVISIONS

NO.	BY	DESCRIPTION
1	KEVIN MCCLOSKEY	Issued for Approval

AS-BUILT
6/13/05

DEVICE LOCATION & WIRING
OF THE
FIRE DETECTION
AND ALARM SYSTEM
FOR
GLEN CANYON DAM
FIRE PROTECTION SYSTEM
Page, AZ 86040-1477
805 Burton Street

Hiller Systems Inc
FIRE DETECTION & SUPPRESSION
DESIGN/BUILD SYSTEMS INTEGRATION
833 PRINCIPAL LANE
CHESAPEAKE, VIRGINIA 23320
TEL: (757)-549-9123
FAX: (757)-549-1083

DESIGNED BY: MSG	DRAWN BY: MMM
CHECKED BY: RMF	REVISION No. 0
DATE: JUN 25, 2004	
DWG No.: VM4070-07	SCALE: AS SHOWN

SHEET NUMBER
7
OF 31 TOTAL SHEETS
DATE OF ORIGINAL ISSUE
JUN 25, 2004

JOB No.: 4070 JOB CODE: VM

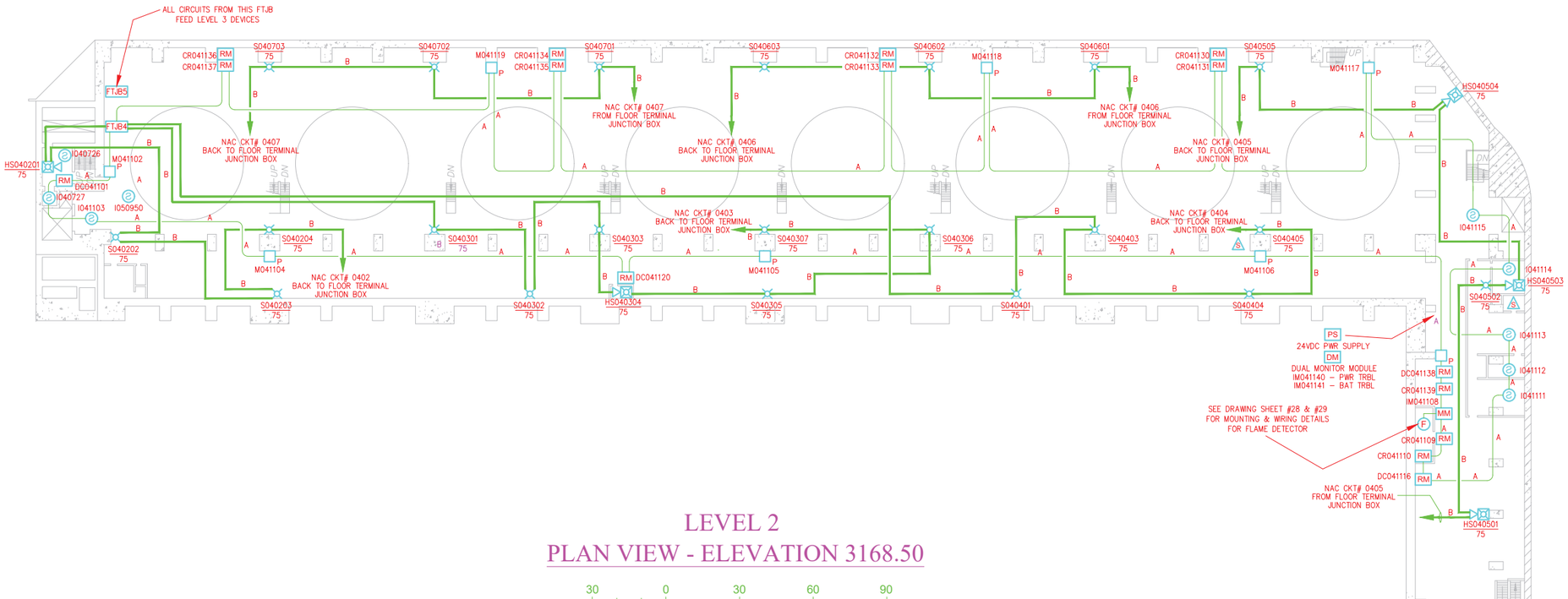

LEVEL 2
PLAN VIEW - ELEVATION 3168.50

30 0 30 60 90

APPROXIMATE GRAPHIC SCALE IN FEET

DEVICE NAMING LEGEND

M010101

- DEVICE NUMBER
- CKT NUMBER
- FLOOR NUMBER
- DEVICE TYPE:
  - M = MANUAL STATION
  - B = PROJECTED BEAM DETECTOR
  - I = IONIZATION TYPE SMOKE DETECTOR
  - T = THERMAL TYPE DETECTOR
  - DC = DAMPER CONTROL RELAY MODULE
  - F = FLAME TYPE DETECTOR
  - LT = LINEAR TYPE THERMAL DETECTOR
  - IM = ADDRESSABLE INPUT MODULE
  - CR = CONTROL RELAY MODULE
  - S = NOTIFICATION APPLIANCE – STROBE
  - HS = NOTIFICATION APPLIANCE – HORN/STROBE

WIRING LEGEND

- A – 2 COND, 18 AWG, TWISTED/SHIELDED, PLENUM SIGNALING LINE CIRCUIT (SLC) WIRING
- B – 2 COND, 14 AWG, SOLID, PLENUM NOTIFICATION APPLIANCE CIRCUIT (NAC) WIRING
- C – 3 COND, 12 AWG, SOLID 120VAC, DOOR HOLDER WIRING
- D – 2 COND, 14 AWG, SOLID, PLENUM 24VDC POWER TO CZM MODULE

ELEVATION 3168.50
NOTIFICATION CKT LOADING TABLE

FLOOR & CIRCUIT NUMBER	ORIGINATES	AREA SERVED	USED (AMPS)	AVAIL (AMPS)	USED % (AMPS)
0402	FTJB# 4	EL. 3168.50	0.597	3.0	19.9%
0403	FTJB# 4	EL. 3168.50	0.597	3.0	19.9%
0404	FTJB# 4	EL. 3168.50	0.580	3.0	19.3%
0405	FTJB# 4	EL. 3168.50	0.631	3.0	21.1%
0406	FTJB# 4	EL. 3168.50	0.339	3.0	11.3%
0407	FTJB# 4	EL. 3168.50	0.339	3.0	11.3%

NOTIFICATION CIRCUIT MAXIMUM WIRE DISTANCE

$R_1 = \frac{V_1 - V_2}{A}$

$D = \frac{R_1}{R_2}$

WHERE:
- D = MAXIMUM CIRCUIT DISTANCE
- A = TOTAL CURRENT DRAW
- V_1 = OUTPUT FROM FACP
- V_2 = MAX VOLTAGE DROP (10%)
- R_1 = MAX ALLOWABLE RESISTANCE
- R_2 = WIRE RESISTANCE (14AWG WIRE)

$R_1 = \frac{24.0 \text{ VDC} - 21.6 \text{ VDC}}{0.631 \text{ AMPS}}$

$R_1 = 3.8034$

$D = \frac{3.8034}{.00314}$

D = 1211 FT

MAXIMUM NAC CIRCUIT LENGTH

FOR INFORMATION ONLY

M2731

REVISIONS

NO.	DESCRIPTION	BY	DATE
0	ISSUED FOR PERMIT	DMK	6/13/05

AS-BUILT
6/13/05

DEVICE LOCATION & WIRING OF THE FIRE DETECTION AND ALARM SYSTEM FOR GLEN CANYON DAM FIRE PROTECTION SYSTEM

805 Buren Street Page, AZ 86040-1477

FIRE DETECTION & SUPPRESSION DESIGN & INSTALLATION
Hiller Systems Inc
833 PRINCIPAL LANE
CHESAPEAKE, VIRGINIA 23320
TEL: (757)-549-9123
FAX: (757)-549-1083

DESIGNED BY: MSG	DRAWN BY: MMM
CHECKED BY: RMF	REVISION No. 0
DATE: JUN 25, 2004	
DWG No.: VM4070-08	SCALE: AS SHOWN

SHEET NUMBER
8
OF 31 TOTAL SHEETS

DATE OF ORIGINAL ISSUE
JUN 25, 2004

JOB No.: 4070 JOB CODE: VM

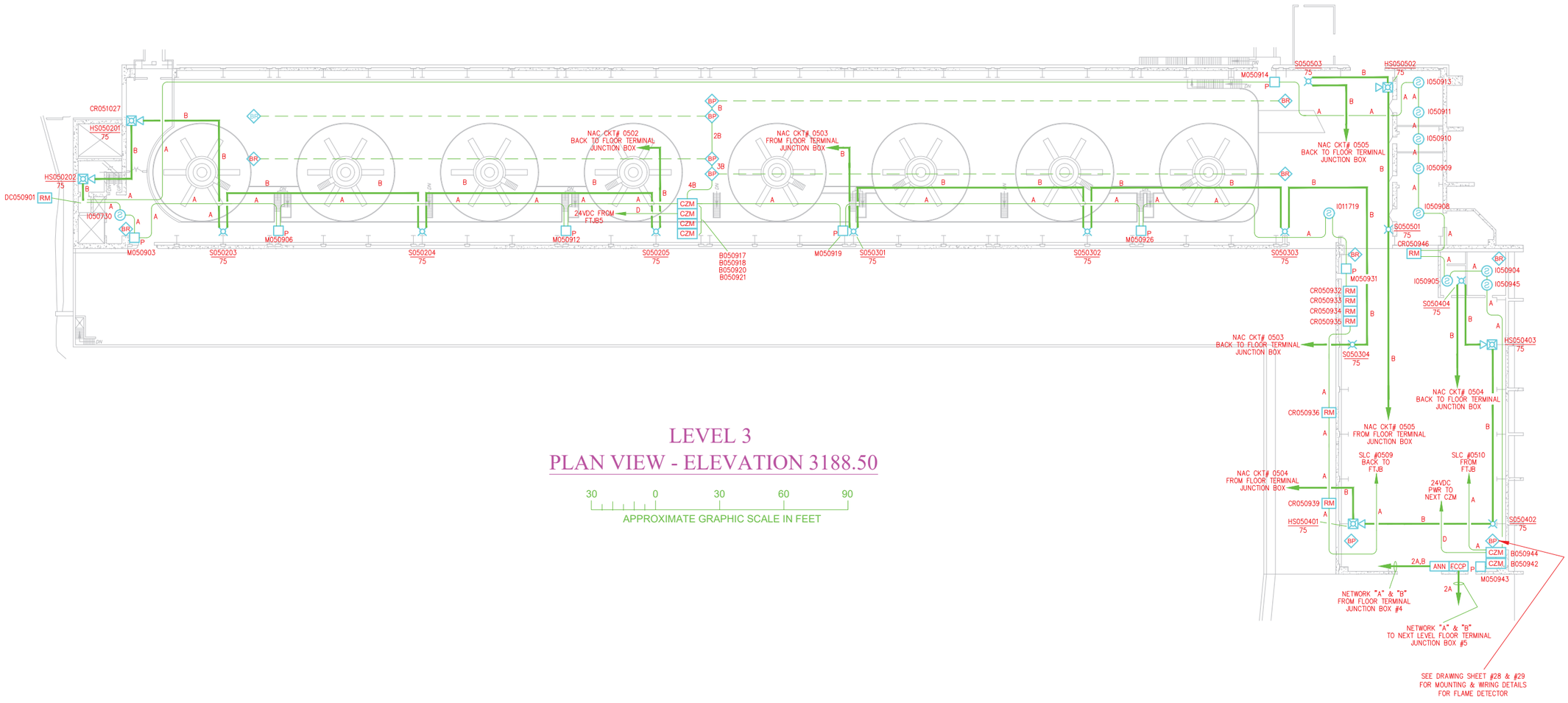

LEVEL 3
PLAN VIEW - ELEVATION 3188.50

30 0 30 60 90

APPROXIMATE GRAPHIC SCALE IN FEET

DEVICE NAMING LEGEND

M010101

- DEVICE NUMBER
- CKT NUMBER
- FLOOR NUMBER
- DEVICE TYPE:
  - M = MANUAL STATION
  - B = PROJECTED BEAM DETECTOR
  - I = IONIZATION TYPE SMOKE DETECTOR
  - T = THERMAL TYPE DETECTOR
  - DC = DAMPER CONTROL RELAY MODULE
  - F = FLAME TYPE DETECTOR
  - LT = LINEAR TYPE THERMAL DETECTOR
  - IM = ADDRESSABLE INPUT MODULE
  - CR = CONTROL RELAY MODULE
  - S = NOTIFICATION APPLIANCE – STROBE
  - HS = NOTIFICATION APPLIANCE – HORN/STROBE

WIRING LEGEND

- A – 2 COND, 18 AWG, TWISTED/SHIELDED, PLENUM SIGNALING LINE CIRCUIT (SLC) WIRING
- B – 2 COND, 14 AWG, SOLID, PLENUM NOTIFICATION APPLIANCE CIRCUIT (NAC) WIRING
- C – 3 COND, 12 AWG, SOLID 120VAC, DOOR HOLDER WIRING
- D – 2 COND, 14 AWG, SOLID, PLENUM 24VDC POWER TO CZM MODULE

ELEVATION 3188.50
NOTIFICATION CKT LOADING TABLE

FLOOR & CIRCUIT NUMBER	ORIGINATES	AREA SERVED	USED (AMPS)	AVAIL (AMPS)	USED % (AMPS)
0502	FTJB# 5	EL. 3188.50	0.614	3.0	20.5%
0503	FTJB# 5	EL. 3188.50	0.464	3.0	15.5%
0504	FTJB# 5	EL. 3188.50	0.498	3.0	16.6%
0505	FTJB# 5	EL. 3188.50	0.365	3.0	12.2%
0506	FTJB# 5	SPARE	0.000	3.0	0.00%
0507	FTJB# 5	SPARE	0.000	3.0	0.00%

NOTIFICATION CIRCUIT
MAXIMUM WIRE DISTANCE

$R_1 = \frac{V_1 - V_2}{A}$

$D = \frac{R_1}{R_2}$

WHERE:
- D = MAXIMUM CIRCUIT DISTANCE
- A = TOTAL CURRENT DRAW
- V_1 = OUTPUT FROM FACP
- V_2 = MAX VOLTAGE DROP (10%)
- R_1 = MAX ALLOWABLE RESISTANCE
- R_2 = WIRE RESISTANCE (14AWG WIRE)

$R_1 = \frac{24.0\ VDC - 21.6\ VDC}{0.614\ AMPS}$

$R_1 = 3.9087$

$D = \frac{3.9087}{.00314}$

$D = 1244\ FT$

MAXIMUM NAC CIRCUIT LENGTH

FOR INFORMATION ONLY

M2732

REVISIONS

NO.	BY	DESCRIPTION
1	KEITH	Issued for Approval
2	KEITH	Issued for Bid

AS-BUILT
6/13/05

DEVICE LOCATION & WIRING
OF THE
FIRE DETECTION
AND ALARM SYSTEM
FOR
GLEN CANYON DAM
FIRE PROTECTION SYSTEM
Page, AZ 86040-1477
805 Bureau Street

Hiller Systems Inc
FIRE DETECTION & SUPPRESSION
DESIGN/BUILD SYSTEMS
833 PRINCIPAL LANE
CHESAPEAKE, VIRGINIA 23320
TEL: (757)-549-9123
FAX: (757)-549-1083

DESIGNED BY: MSG	DRAWN BY: MWM
CHECKED BY: RMF	REVISION No.: 0
DATE: JUN 25, 2004	
DWG No.: VM4070-09	SCALE: AS SHOWN

SHEET NUMBER
9
OF 31 TOTAL SHEETS
DATE OF ORIGINAL ISSUE
JUN 25, 2004

JOB No.: 4070 JOB CODE: VM

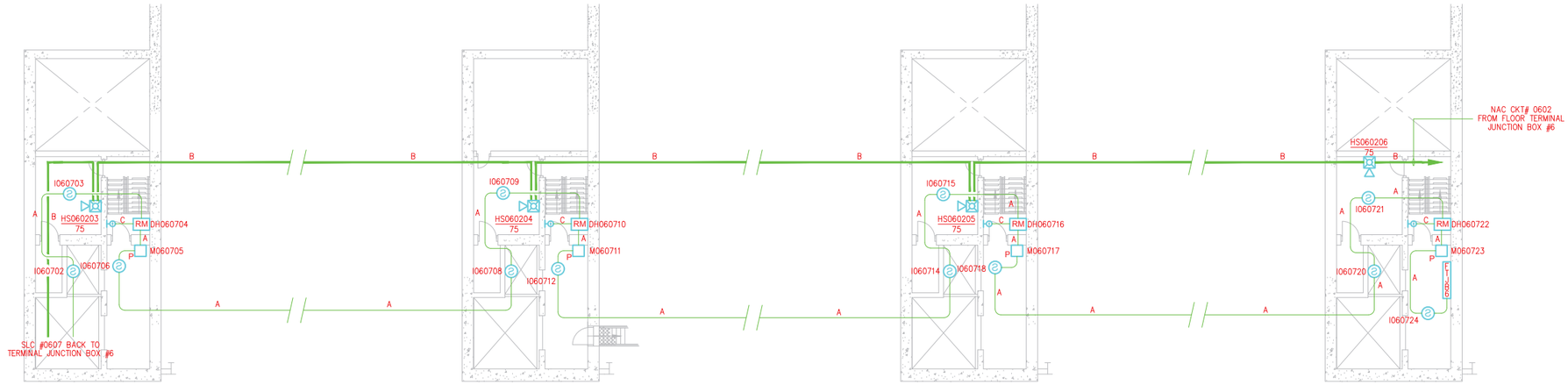

LEVEL 4
PLAN VIEW - ELEVATION 3199.75

LEVEL 5
PLAN VIEW - ELEVATION 3211.00

LEVEL 6
PLAN VIEW - ELEVATION 3222.25

LEVEL 7
PLAN VIEW - ELEVATION 3233.50

30 0 30 60 90
APPROXIMATE GRAPHIC SCALE IN FEET

DEVICE NAMING LEGEND

M010101

- DEVICE NUMBER
- CKT NUMBER
- FLOOR NUMBER
- DEVICE TYPE:
  - M = MANUAL STATION
  - B = PROJECTED BEAM DETECTOR
  - I = IONIZATION TYPE SMOKE DETECTOR
  - T = THERMAL TYPE DETECTOR
  - DC = DAMPER CONTROL RELAY MODULE
  - F = FLAME TYPE DETECTOR
  - LT = LINEAR TYPE THERMAL DETECTOR
  - IM = ADDRESSABLE INPUT MODULE
  - CR = CONTROL RELAY MODULE
  - S = NOTIFICATION APPLIANCE – STROBE
  - HS = NOTIFICATION APPLIANCE – HORN/STROBE

WIRING LEGEND

- A – 2 COND, 18 AWG, TWISTED/SHIELDED, PLENUM
  SIGNALING LINE CIRCUIT (SLC) WIRING
- B – 2 COND, 14 AWG, SOLID, PLENUM
  NOTIFICATION APPLIANCE CIRCUIT (NAC) WIRING
- C – 3 COND, 12 AWG, SOLID
  120VAC, DOOR HOLDER WIRING
- D – 2 COND, 14 AWG, SOLID, PLENUM
  24VDC POWER TO CZM MODULE

ELEVATION 3199.75, 3211.00, 3222.25 & 3233.50
NOTIFICATION CKT LOADING TABLE

FLOOR & CIRCUIT NUMBER	ORIGINATES	AREA SERVED	USED (AMPS)	AVAIL (AMPS)	USED % (AMPS)
0602	FTJB# 6	STAIRWELLS	0.532	3.0	17.7%
0603	FTJB# 6	SPARE	0.000	3.0	0.00%

NOTIFICATION CIRCUIT
MAXIMUM WIRE DISTANCE

$$R_1 = \frac{V_1 - V_2}{A}$$

$$D = \frac{R_1}{R_2}$$

WHERE:
- D = MAXIMUM CIRCUIT DISTANCE
- A = TOTAL CURRENT DRAW
- V_1 = OUTPUT FROM FACP
- V_2 = MAX VOLTAGE DROP (10%)
- R_1 = MAX ALLOWABLE RESISTANCE
- R_2 = WIRE RESISTANCE (14AWG WIRE)

$$R_1 = \frac{24.0\ \text{VDC} - 21.6\ \text{VDC}}{0.537\ \text{AMPS}}$$

$$R_1 = 4.5112$$

$$D = \frac{4.5112}{.00314}$$

$$\boxed{D = 1436\ \text{FT}}$$

MAXIMUM NAC CIRCUIT LENGTH

FOR INFORMATION ONLY

M2733

REVISIONS

No.	Date:	By:	DESCRIPTION
0	6/25/04	MSG	Submit for Approval
1	6/13/05	MSG	AS-BUILT

AS-BUILT
6/13/05

DEVICE LOCATION & WIRING
OF THE
FIRE DETECTION
AND ALARM SYSTEM
FOR
GLEN CANYON DAM
FIRE PROTECTION SYSTEM
805 Bureau Street Page, AZ 86040-1477

Hiller Systems Inc
FIRE DETECTION & SUPPRESSION DESIGNERS & INSTALLERS
833 PRINCIPAL LANE
CHESAPEAKE, VIRGINIA 23320
TEL: (757)-549-9123
FAX: (757)-549-1083

DESIGNED BY: MSG	DRAWN BY: MMM
CHECKED BY: RMF	REVISION No. 0
DATE: JUN 25, 2004	
DWG No. VM4070-10	SCALE: AS SHOWN

SHEET NUMBER
10
OF 31 TOTAL SHEETS
DATE OF ORIGINAL ISSUE
JUN 25, 2004

JOB No. 4070 | JOB CODE: VM

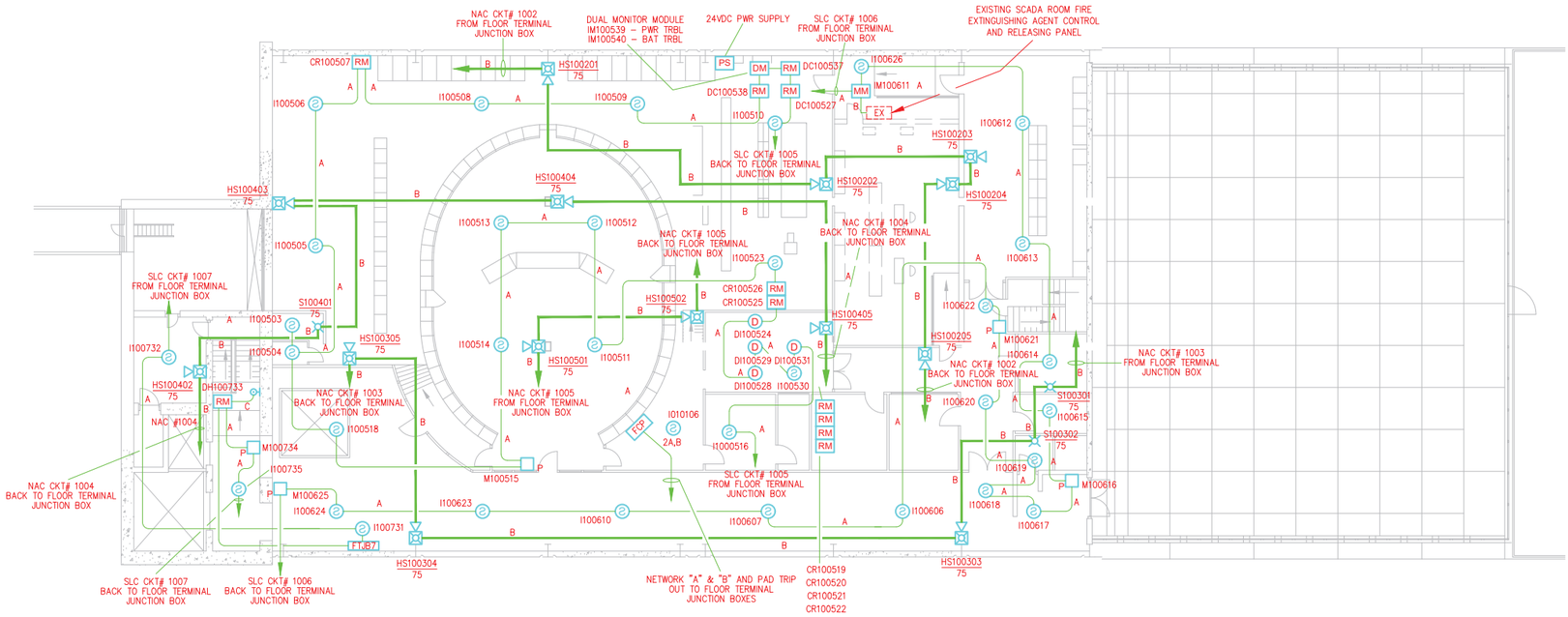

LEVEL 8
PLAN VIEW - ELEVATION 3244.24

30 0 30 60 90

APPROXIMATE GRAPHIC SCALE IN FEET

DEVICE NAMING LEGEND

M010101

- DEVICE NUMBER
- CKT NUMBER
- FLOOR NUMBER
- DEVICE TYPE:
  - M = MANUAL STATION
  - B = PROJECTED BEAM DETECTOR
  - I = IONIZATION TYPE SMOKE DETECTOR
  - T = THERMAL TYPE DETECTOR
  - DC = DAMPER CONTROL RELAY MODULE
  - F = FLAME TYPE DETECTOR
  - LT = LINEAR TYPE THERMAL DETECTOR
  - IM = ADDRESSABLE INPUT MODULE
  - CR = CONTROL RELAY MODULE
  - S = NOTIFICATION APPLIANCE – STROBE
  - HS = NOTIFICATION APPLIANCE – HORN/STROBE

WIRING LEGEND

- A – 2 COND, 18 AWG, TWISTED/SHIELDED, PLENUM SIGNALING LINE CIRCUIT (SLC) WIRING
- B – 2 COND, 14 AWG, SOLID, PLENUM NOTIFICATION APPLIANCE CIRCUIT (NAC) WIRING
- C – 3 COND, 12 AWG, SOLID 120VAC, DOOR HOLDER WIRING
- D – 2 COND, 14 AWG, SOLID, PLENUM 24VDC POWER TO CZM MODULE

ELEVATION 3244.24
NOTIFICATION CKT LOADING TABLE

FLOOR & CIRCUIT NUMBER	ORIGINATES	AREA SERVED	USED (AMPS)	AVAIL (AMPS)	USED % (AMPS)
1002	FTJB# 7	EL. 3244.24	0.665	3.0	22.2%
1003	FTJB# 7	EL. 3244.24	0.631	3.0	21.1%
1004	FTJB# 7	EL. 3244.24	0.648	3.0	21.6%
1005	FTJB# 7	EL. 3244.24	0.266	3.0	8.87%
1006	FTJB# 7	SPARE	0.000	3.0	0.00%
1007	FTJB# 7	SPARE	0.000	3.0	0.00%

NOTIFICATION CIRCUIT MAXIMUM WIRE DISTANCE

$$R_1 = \frac{V_1 - V_2}{A} \qquad D = \frac{R_1}{R_2}$$

WHERE:
- D = MAXIMUM CIRCUIT DISTANCE
- A = TOTAL CURRENT DRAW
- V_1 = OUTPUT FROM FACP
- V_2 = MAX VOLTAGE DROP (10%)
- R_1 = MAX ALLOWABLE RESISTANCE
- R_2 = WIRE RESISTANCE (14AWG WIRE)

$$R_1 = \frac{24.0\ VDC - 21.6\ VDC}{0.665\ AMPS}$$

$$R_1 = 3.6090$$

$$D = \frac{3.6090}{.00314}$$

$$D = 1149\ FT$$

MAXIMUM NAC CIRCUIT LENGTH

FOR INFORMATION ONLY

M2734

REVISIONS

NO.	DATE	BY	DESCRIPTION
1	6/13/05	RMF	Issued for Record
			CHANGE NAC CKT #1

AS-BUILT
6/13/05

DEVICE LOCATION & WIRING OF THE FIRE DETECTION AND ALARM SYSTEM FOR GLEN CANYON DAM FIRE PROTECTION SYSTEM

805 Bureau Street, Page, AZ 86040-1477

Hiller Systems Inc
FIRE DETECTION & SUPPRESSION DESIGNERS & CONSULTANTS
833 PRINCIPAL LANE
CHESAPEAKE, VIRGINIA 23320
TEL.: (757)-549-9123
FAX: (757)-549-1083

DESIGNED BY: MSG	DRAWN BY: MWM
CHECKED BY: RMF	REVISION No.: 0
DATE: JUN 25, 2004	
DWG No.: VM4070-11	SCALE: AS SHOWN

SHEET NUMBER
11
OF 31 TOTAL SHEETS

DATE OF ORIGINAL ISSUE
JUN 25, 2004

JOB No.: 4070 JOB CODE: VM

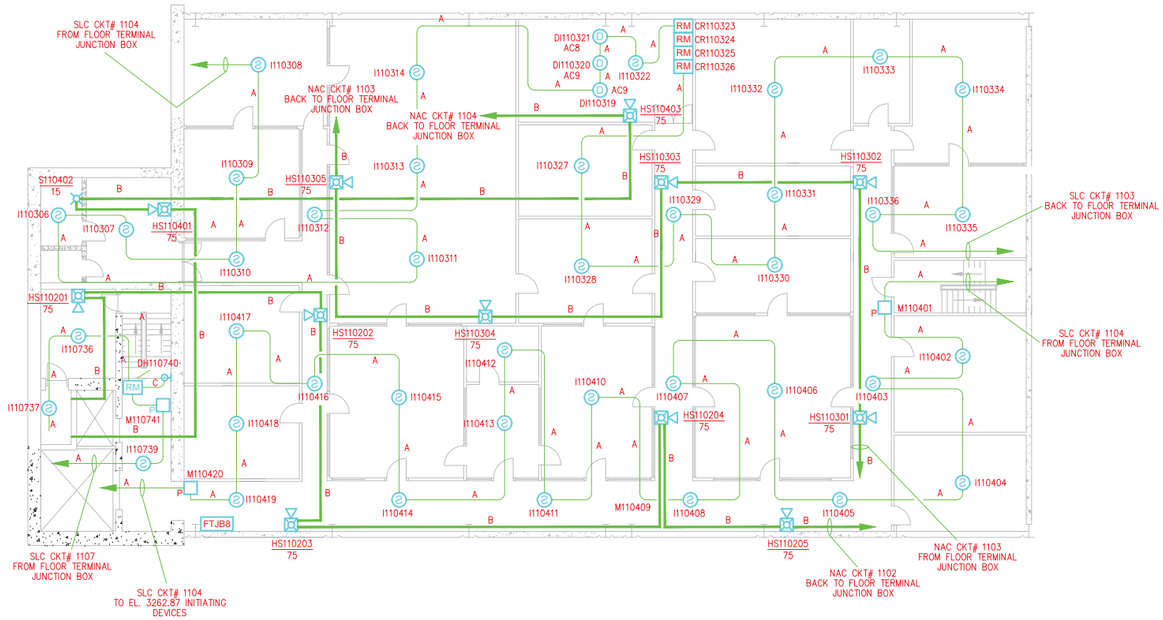

LEVEL 9
PLAN VIEW - ELEVATION 3257.25

30 0 30 60 90

APPROXIMATE GRAPHIC SCALE IN FEET

DEVICE NAMING LEGEND

M010101

- DEVICE NUMBER
- CKT NUMBER
- FLOOR NUMBER
- DEVICE TYPE:
  - M = MANUAL STATION
  - B = PROJECTED BEAM DETECTOR
  - I = IONIZATION TYPE SMOKE DETECTOR
  - T = THERMAL TYPE DETECTOR
  - DC = DAMPER CONTROL RELAY MODULE
  - F = FLAME TYPE DETECTOR
  - LT = LINEAR TYPE THERMAL DETECTOR
  - IM = ADDRESSABLE INPUT MODULE
  - CR = CONTROL RELAY MODULE
  - S = NOTIFICATION APPLIANCE – STROBE
  - HS = NOTIFICATION APPLIANCE – HORN/STROBE

WIRING LEGEND

- A – 2 COND, 18 AWG, TWISTED/SHIELDED, PLENUM
  SIGNALING LINE CIRCUIT (SLC) WIRING
- B – 2 COND, 14 AWG, SOLID, PLENUM
  NOTIFICATION APPLIANCE CIRCUIT (NAC) WIRING
- C – 3 COND, 12 AWG, SOLID
  120VAC, DOOR HOLDER WIRING
- D – 2 COND, 14 AWG, SOLID, PLENUM
  24VDC POWER TO CZM MODULE

ELEVATION 3257.25
NOTIFICATION CKT LOADING TABLE

FLOOR & CIRCUIT NUMBER	ORIGINATES	AREA SERVED	USED (AMPS)	AVAIL (AMPS)	USED % (AMPS)
1102	FTJB# 8	EL. 3257.25	0.665	3.0	22.2%
1103	FTJB# 8	EL. 3257.25	0.665	3.0	22.2%
1104	FTJB# 8	EL. 3257.25	0.382	3.0	12.7%
1105	FTJB# 8	STAIRWELL	0.399	3.0	13.3%
1106	FTJB# 8	SPARE	0.000	3.0	0.00%
1107	FTJB# 8	SPARE	0.000	3.0	0.00%

NOTIFICATION CIRCUIT
MAXIMUM WIRE DISTANCE

$$R_1 = \frac{V_1 - V_2}{A} \qquad D = \frac{R_1}{R_2}$$

WHERE:
D = MAXIMUM CIRCUIT DISTANCE
A = TOTAL CURRENT DRAW
V_1 = OUTPUT FROM FACP
V_2 = MAX VOLTAGE DROP (10%)
R_1 = MAX ALLOWABLE RESISTANCE
R_2 = WIRE RESISTANCE (14AWG WIRE)

$$R_1 = \frac{24.0\ VDC - 21.6\ VDC}{0.665\ AMPS}$$

$R_1 = 3.6090$

$$D = \frac{3.6090}{.00314}$$

D = 1149 FT

MAXIMUM NAC CIRCUIT LENGTH

FOR INFORMATION ONLY

M2735

REVISIONS

NO.	DATE	BY	DESCRIPTION
1	6/13/05	MSG	Submit for Approval

AS-BUILT
6/13/05

DEVICE LOCATION & WIRING
OF THE
FIRE DETECTION
AND ALARM SYSTEM
FOR
GLEN CANYON DAM
FIRE PROTECTION SYSTEM
Page, AZ 86040-1477

Hiller Systems Inc
FIRE DETECTION & SUPPRESSION
SYSTEMS DESIGN & INSTALLATION
833 PRINCIPAL LANE
CHESAPEAKE, VIRGINIA 23320
TEL: (757)-549-9123
FAX: (757)-549-1083

DESIGNED BY: MSG	DRAWN BY: MMM
CHECKED BY: RMF	REVISION No. 0
DATE: JUN 25, 2004	
DWG No.: VM4070-12	SCALE: AS SHOWN

SHEET NUMBER
12
OF 31 TOTAL SHEETS
DATE OF ORIGINAL ISSUE
JUN 25, 2004

JOB No.: 4070 JOB CODE: VM

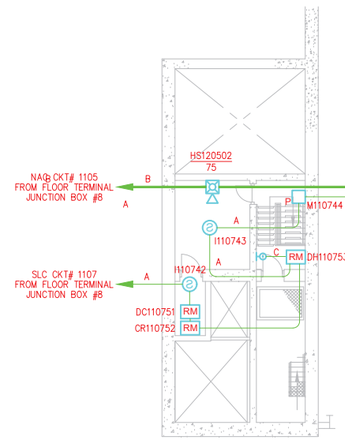

PLAN VIEW - ELEVATION 3267.87

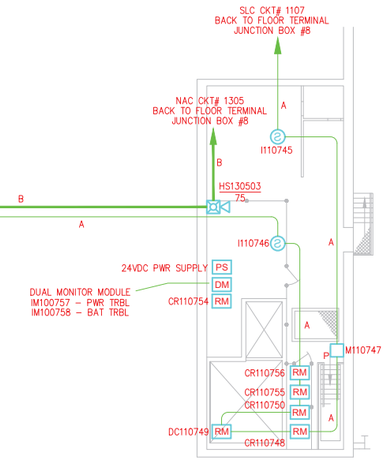

PLAN VIEW - ELEVATION 3279.12

30 0 30 60 90

APPROXIMATE GRAPHIC SCALE IN FEET

DEVICE NAMING LEGEND

M010101

- DEVICE NUMBER
- CKT NUMBER
- FLOOR NUMBER
- DEVICE TYPE:
  - M = MANUAL STATION
  - B = PROJECTED BEAM DETECTOR
  - I = IONIZATION TYPE SMOKE DETECTOR
  - T = THERMAL TYPE DETECTOR
  - DC = DAMPER CONTROL RELAY MODULE
  - F = FLAME TYPE DETECTOR
  - LT = LINEAR TYPE THERMAL DETECTOR
  - IM = ADDRESSABLE INPUT MODULE
  - CR = CONTROL RELAY MODULE
  - S = NOTIFICATION APPLIANCE – STROBE
  - HS = NOTIFICATION APPLIANCE – HORN/STROBE

WIRING LEGEND

- A – 2 COND, 18 AWG, TWISTED/SHIELDED, PLENUM
  SIGNALING LINE CIRCUIT (SLC) WIRING
- B – 2 COND, 14 AWG, SOLID, PLENUM
  NOTIFICATION APPLIANCE CIRCUIT (NAC) WIRING
- C – 3 COND, 12 AWG, SOLID
  120VAC, DOOR HOLDER WIRING
- D – 2 COND, 14 AWG, SOLID, PLENUM
  24VDC POWER TO CZM MODULE

ELEVATION 3262.87, 3267.87 &3279.12
NOTIFICATION CKT LOADING TABLE

FLOOR & CIRCUIT NUMBER	ORIGINATES	AREA SERVED	USED (AMPS)	AVAIL (AMPS)	USED % (AMPS)
1102	FTJB# 8	EL. 3257.25	0.665	3.0	22.2%
1103	FTJB# 8	EL. 3257.25	0.665	3.0	22.2%
1104	FTJB# 8	EL. 3257.25	0.382	3.0	12.7%
1105	FTJB# 8	STAIRWELL	0.399	3.0	13.3%
1106	FTJB# 8	SPARE	0.000	3.0	0.00%
1107	FTJB# 8	SPARE	0.000	3.0	0.00%

NOTIFICATION CIRCUIT
MAXIMUM WIRE DISTANCE

$$R_1 = \frac{V_1 - V_2}{A}$$

$$D = \frac{R_1}{R_2}$$

WHERE:
- D = MAXIMUM CIRCUIT DISTANCE
- A = TOTAL CURRENT DRAW
- V_1 = OUTPUT FROM FACP
- V_2 = MAX VOLTAGE DROP (10%)
- R_1 = MAX ALLOWABLE RESISTANCE
- R_2 = WIRE RESISTANCE (14AWG WIRE)

$$R_1 = \frac{24.0\ \text{VDC} - 21.6\ \text{VDC}}{0.665\ \text{AMPS}}$$

$$R_1 = 3.6090$$

$$D = \frac{3.6090}{.00314}$$

$$\boxed{D = 1149\ \text{FT}}$$

MAXIMUM NAC CIRCUIT LENGTH

FOR INFORMATION ONLY

M2736

REVISIONS

No.	Date:	By:	DESCRIPTION
0	6/25/04	MSG	Submit for Approval
1	6/13/05	MMS	AS-BUILT

AS-BUILT
6/13/05

DEVICE LOCATION & WIRING
OF THE
FIRE DETECTION
AND ALARM SYSTEM
FOR
GLEN CANYON DAM
FIRE PROTECTION SYSTEM
805 Bureau Street Page, AZ 86040-1477

Hiller Systems Inc
FIRE DETECTION & SUPPRESSION DESIGNERS & INSTALLERS
833 PRINCIPAL LANE
CHESAPEAKE, VIRGINIA 23320
TEL: (757)-549-9123
FAX: (757)-549-1083

DESIGNED BY: MSG	DRAWN BY: MMM
CHECKED BY: RMF	REVISION No. 0
DATE: JUN 25, 2004	
DWG No. VM4070-13	SCALE: AS SHOWN

SHEET NUMBER
13
OF 31 TOTAL SHEETS
DATE OF ORIGINAL ISSUE
JUN 25, 2004

JOB No. 4070 | JOB CODE: VM

SIEMENS MXL TYPICAL FIRE ALARM CONTROL PANEL WIRING - LEVEL 8

NEW MXL FIRE ALARM CONTROL PANEL

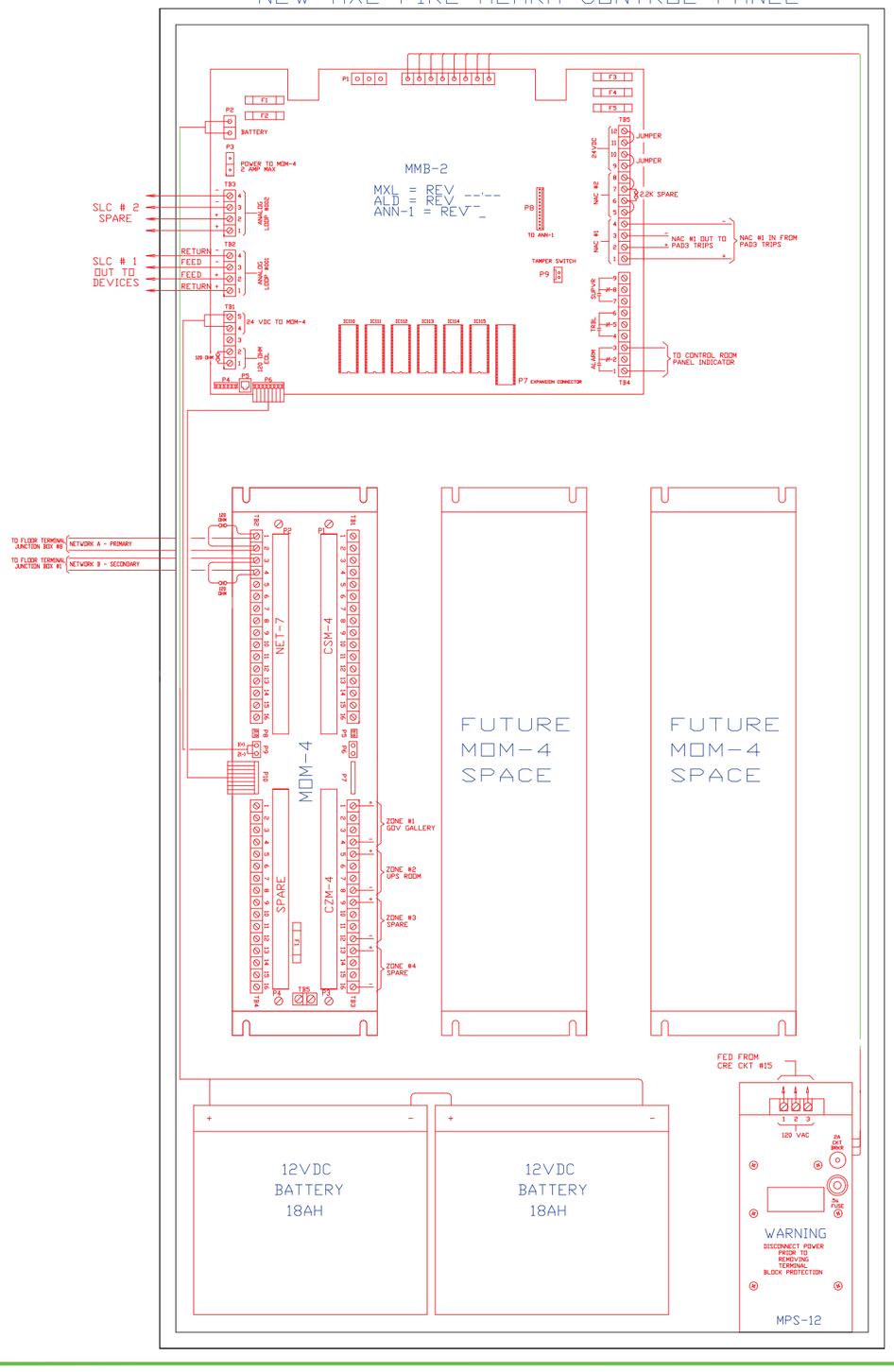

FOR INFORMATION ONLY

REMOTE BATTERY ENCLOSURE (BB-55)

M2737

REVISIONS

NO.	DATE	BY	DESCRIPTION
1	6/13/05	KMF	As-Built Comm. for Approval

AS-BUILT
6/13/05

FIRE ALARM CONTROL PANEL
OF THE
FIRE DETECTION
AND ALARM SYSTEM
FOR
GLEN CANYON DAM
FIRE PROTECTION SYSTEM
800 Bureau Street
Page, AZ. 86040-1477

Hiller Systems Inc
FIRE DETECTION & SUPPRESSION DESIGNERS & INSTALLERS
833 PRINCIPAL LANE
CHESAPEAKE, VIRGINIA 23320
TEL: (757)-549-9123
FAX: (757)-549-1083

DESIGNED BY: MSG	DRAWN BY: MSG
CHECKED BY: RMF	REVISION No. 0
DATE: JUN 25, 2004	
DWG No. VM4070-14	SCALE: NONE

SHEET NUMBER
14
OF 31 TOTAL SHEETS
DATE OF ORIGINAL ISSUE
JUN 25, 2004

JOB No. 4070 | JOB CODE: VM

FLOOR TERMINAL JUNCTION BOX #1 - LEVEL B

INPUT TYPE	DIPSWITCH SETTING	OPERATING DESCRIPTION	CKT
1		INPUT 1 TRIPS ALL OUTPUTS INPUT 2 IS NOT USED	B
2		INPUT 1 TRIPS ALL OUTPUTS INPUT 2 SILENCES SYNC HORNS	B
3		INPUT 1 TRIPS OUTPUTS 1,2,3 INPUT 2 TRIPS OUTPUT 4	B
4		INPUT 1 TRIPS OUTPUTS 1&2 INPUT 2 TRIPS OUTPUTS 3&4	B
(5)		INPUT 1 TRIPS OUTPUTS 1-2 & 3-4 INPUT 2 NOT USED	A
6		INPUT 1 TRIPS OUTPUTS 1-2 & 3-4 INPUT 2 SILENCES SYNC HORNS	A
7		INPUT 1 TRIPS OUTPUTS 1&2 INPUT 2 TRIPS OUTPUTS 3&4	A

SETTING	OPERATING DESCRIPTION
	AUXILIARY POWER OUTPUT ALWAYS ON
	AUX POWER OUTPUT WILL SHUT DOWN 30 SECONDS AFTER AN AC POWER FAULT

OUTPUT	SETTING	OPERATING DESCRIPTION
1-2		INPUT 1'S OUTPUT WILL FOLLOW INPUT PATTERN
1-2		MASTER TEMPORAL OPERATION FROM INPUT 1 STEADY INPUT
1-2		MASTER SYNC/HORN OPER. FROM INPUT 1 STEADY INPUT
3-4		INPUT 1 TRIPS OUTPUTS 1&2 INPUT 2 TRIPS OUTPUTS 3&4
3-4		INPUT 1 TRIPS OUTPUTS 1-2 & 3-4 INPUT 2 NOT USED
3-4		INPUT 1 TRIPS OUTPUTS 1-2 & 3-4 INPUT 2 SILENCES SYNC HORNS

SETTING	OPERATING DESCRIPTION
	AC POWER FAULT REPORTING WILL NOT BE DELAYED
	AC POWER FAULT REPORTING DELAYED 6 HOURS
	AC POWER FAULT REPORTING DELAYED 15 HOURS
	AC POWER FAULT REPORTING DELAYED 24 HOURS

SW1

DS1 OUT1
DS2 OUT2
DS3 OUT3
DS4 OUT4
DS5 AUX
DS6 GRND
DS7 BATT
DS8 POWER

PAD-3 DIP SWITCH SETTINGS

(TYPICAL OF ALL PAD-3's)

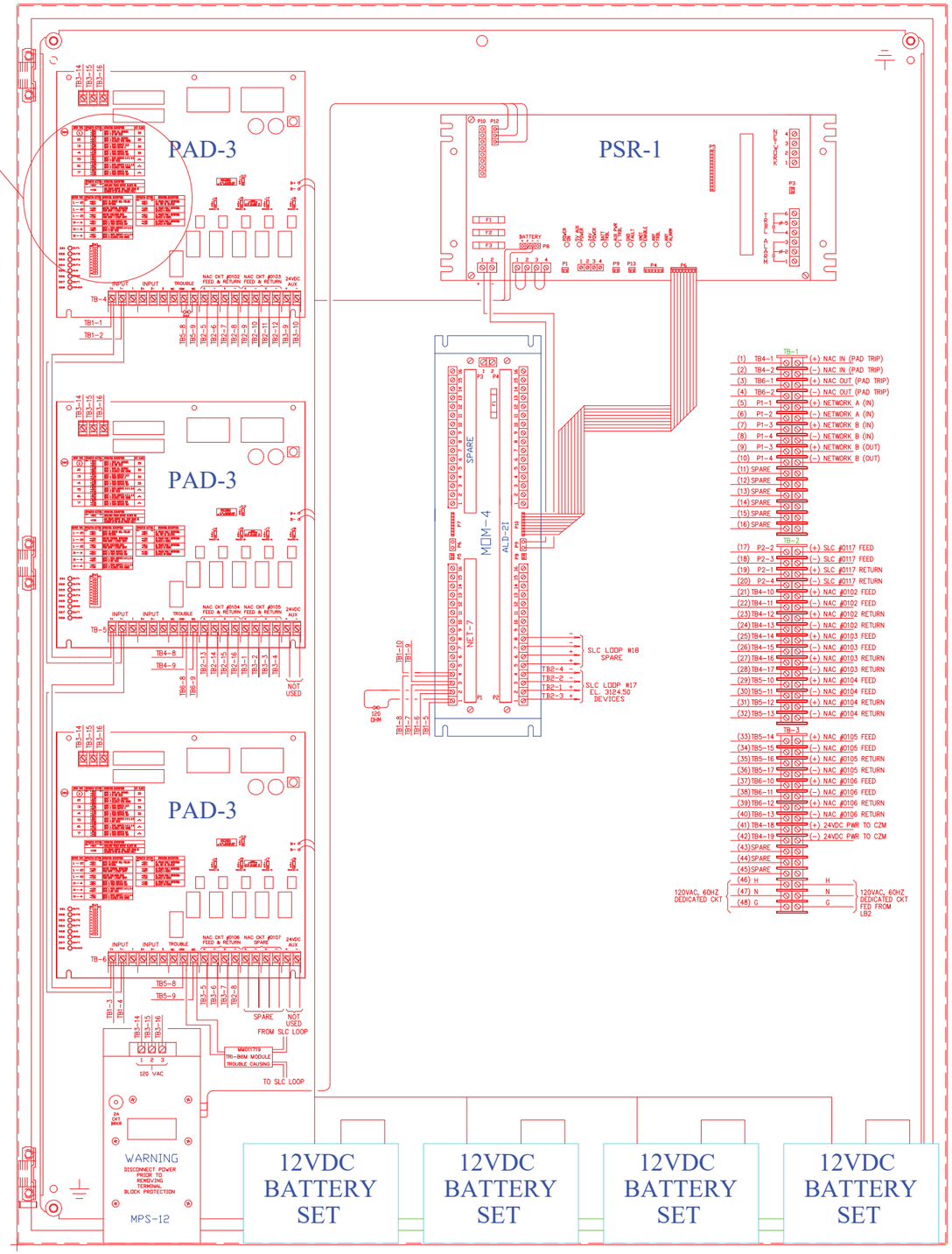

M2738

FOR INFORMATION ONLY

REVISIONS

NO.	DATE	BY	DESCRIPTION
1	6/13/05	MSG	AS-BUILT per Jeremy
2			ADDED MDM-4

AS-BUILT
6/13/05

FLOOR TERMINAL JUNCTION BOX #1
OF THE
FIRE DETECTION
AND ALARM SYSTEM
FOR
GLEN CANYON DAM
FIRE PROTECTION SYSTEM
805 Bureau Street, Page, AZ. 86040-1477

Hiller Systems Inc
FIRE DETECTION & SUPPRESSION DESIGNERS & CONSULTANTS
833 PRINCIPAL LANE
CHESAPEAKE, VIRGINIA 23320
TEL: (757)-549-9123
FAX: (757)-549-1083

DESIGNED BY: MSG	DRAWN BY: MSG
CHECKED BY: RMF	REVISION No.: 0
DATE: JUN 25, 2004	
DWG No. VM4070-15	SCALE: NONE

SHEET NUMBER
15
OF 31 TOTAL SHEETS
DATE OF ORIGINAL ISSUE
JUN 25, 2004

JOB No.: 4070 JOB CODE: VM

FLOOR TERMINAL JUNCTION BOX #2 - LEVEL A

INPUT TYPE	DIPSWITCH SETTING	OPERATING DESCRIPTION	CKT
1		INPUT 1 TRIPS ALL OUTPUTS INPUT 2 IS NOT USED	B
2		INPUT 1 TRIPS ALL OUTPUTS INPUT 2 SILENCES SYNC HORNS	B
3		INPUT 1 TRIPS OUTPUTS 1,2,3 INPUT 2 TRIPS OUTPUT 4	B
4		INPUT 1 TRIPS OUTPUTS 1&2 INPUT 2 TRIPS OUTPUTS 3&4	B
(5)		INPUT 1 TRIPS OUTPUTS 1-2 & 3-4 INPUT 2 NOT USED	A
6		INPUT 1 TRIPS OUTPUTS 1-2 & 3-4 INPUT 2 SILENCES SYNC HORNS	A
7		INPUT 1 TRIPS OUTPUTS 1&2 INPUT 2 TRIPS OUTPUTS 3&4	A

SETTING	OPERATING DESCRIPTION
	AUXILIARY POWER OUTPUT ALWAYS ON
	AUX POWER OUTPUT WILL SHUT DOWN 30 SECONDS AFTER AN AC POWER FAULT

OUTPUT	SETTING	OPERATING DESCRIPTION
1-2		INPUT 1'S OUTPUT WILL FOLLOW INPUT PATTERN
1-2		MASTER TEMPORAL OPERATION FROM INPUT 1 STEADY INPUT
1-2		MASTER SYNC/HORN OPER. FROM INPUT 1 STEADY INPUT
3-4		INPUT 1 TRIPS OUTPUTS 1&2 INPUT 2 TRIPS OUTPUTS 3&4
3-4		INPUT 1 TRIPS OUTPUTS 1-2 & 3-4 INPUT 2 NOT USED
3-4		INPUT 1 TRIPS OUTPUTS 1-2 & 3-4 INPUT 2 SILENCES SYNC HORNS

SETTING	OPERATING DESCRIPTION
	AC POWER FAULT REPORTING WILL NOT BE DELAYED
	AC POWER FAULT REPORTING DELAYED 6 HOURS
	AC POWER FAULT REPORTING DELAYED 15 HOURS
	AC POWER FAULT REPORTING DELAYED 24 HOURS

SW1

DS1 OUT1
DS2 OUT2
DS3 OUT3
DS4 OUT4
DS5 AUX
DS6 GRND
DS7 BATT
DS8 POWER

PAD-3 DIP SWITCH SETTINGS

(TYPICAL OF ALL PAD-3's)

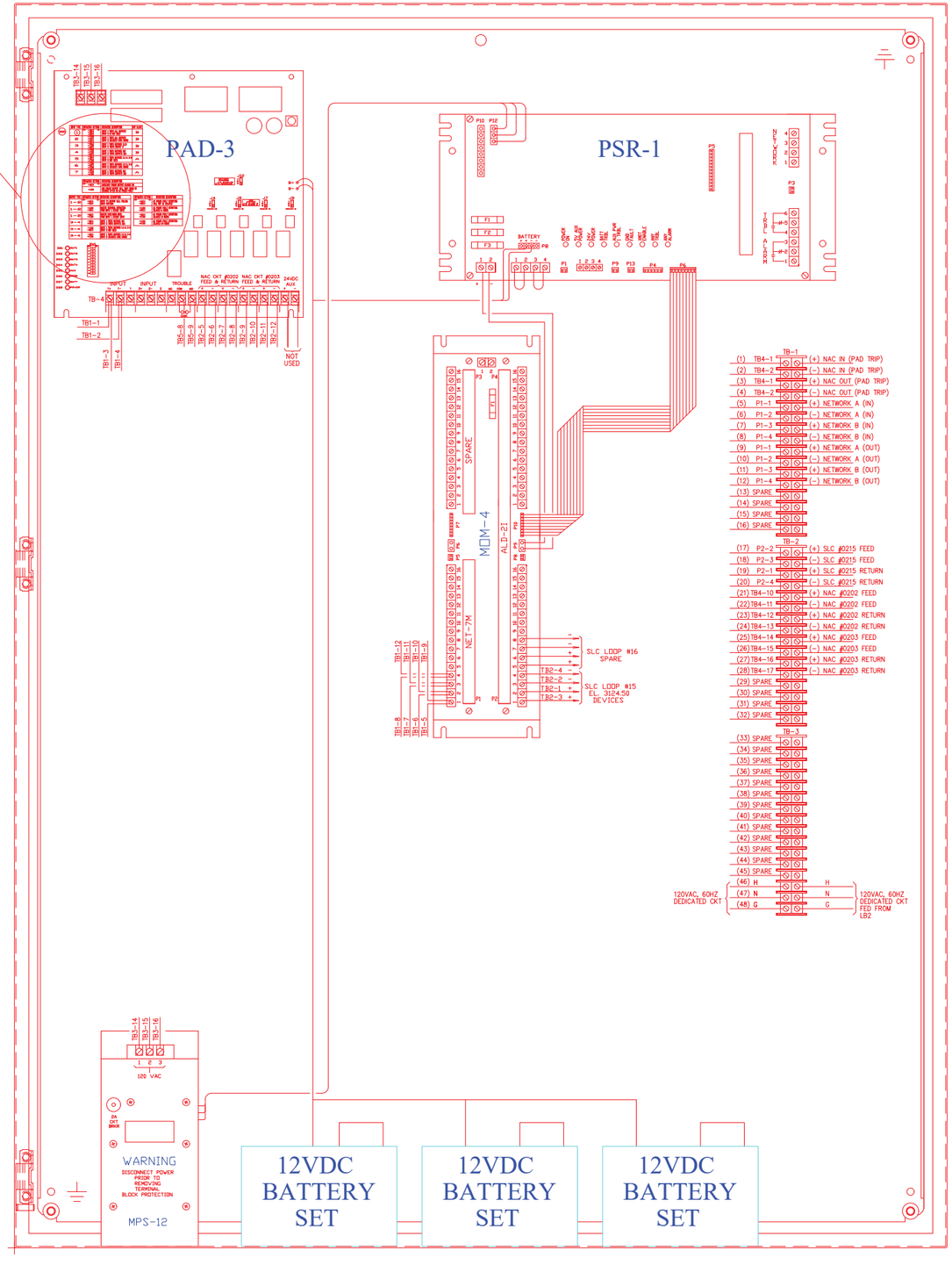

M2739

FOR INFORMATION ONLY

REVISIONS

NO.	DATE	BY	DESCRIPTION
1	6/13/05		AS-BUILT Submittal for Approval
2			ADDITIONAL MODULES ADDED

AS-BUILT
6/13/05

FLOOR TERMINAL JUNCTION BOX #2
OF THE
FIRE DETECTION
AND ALARM SYSTEM
FOR
GLEN CANYON DAM
FIRE PROTECTION SYSTEM
805 Bureau Street
Page, AZ. 86040-1477

Hiller Systems Inc
FIRE DETECTION & SUPPRESSION
DESIGN SYSTEMS CONSULTANTS
833 PRINCIPAL LANE
CHESAPEAKE, VIRGINIA 23320
TEL: (757)-549-9123
FAX: (757)-549-1083

DESIGNED BY: MSG	DRAWN BY: MSG
CHECKED BY: RMF	REVISION No. 0
DATE: JUN 25, 2004	
DWG No. VM4070-16	SCALE: NONE

SHEET NUMBER
16
OF 31 TOTAL SHEETS
DATE OF ORIGINAL ISSUE
JUN 25, 2004

JOB No. 4070	JOB CODE: VM

FLOOR TERMINAL JUNCTION BOX #3 - LEVEL 1

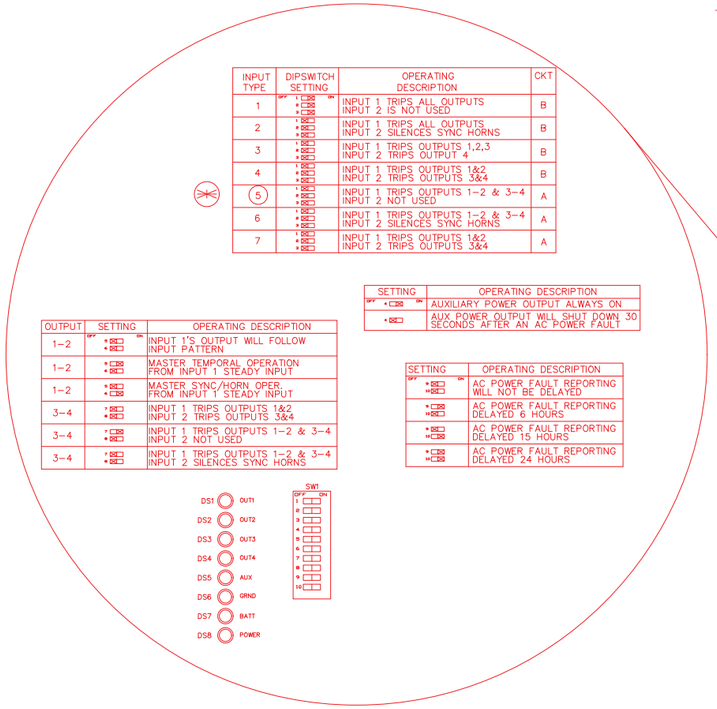

PAD-3 DIP SWITCH SETTINGS

(TYPICAL OF ALL PAD-3's)

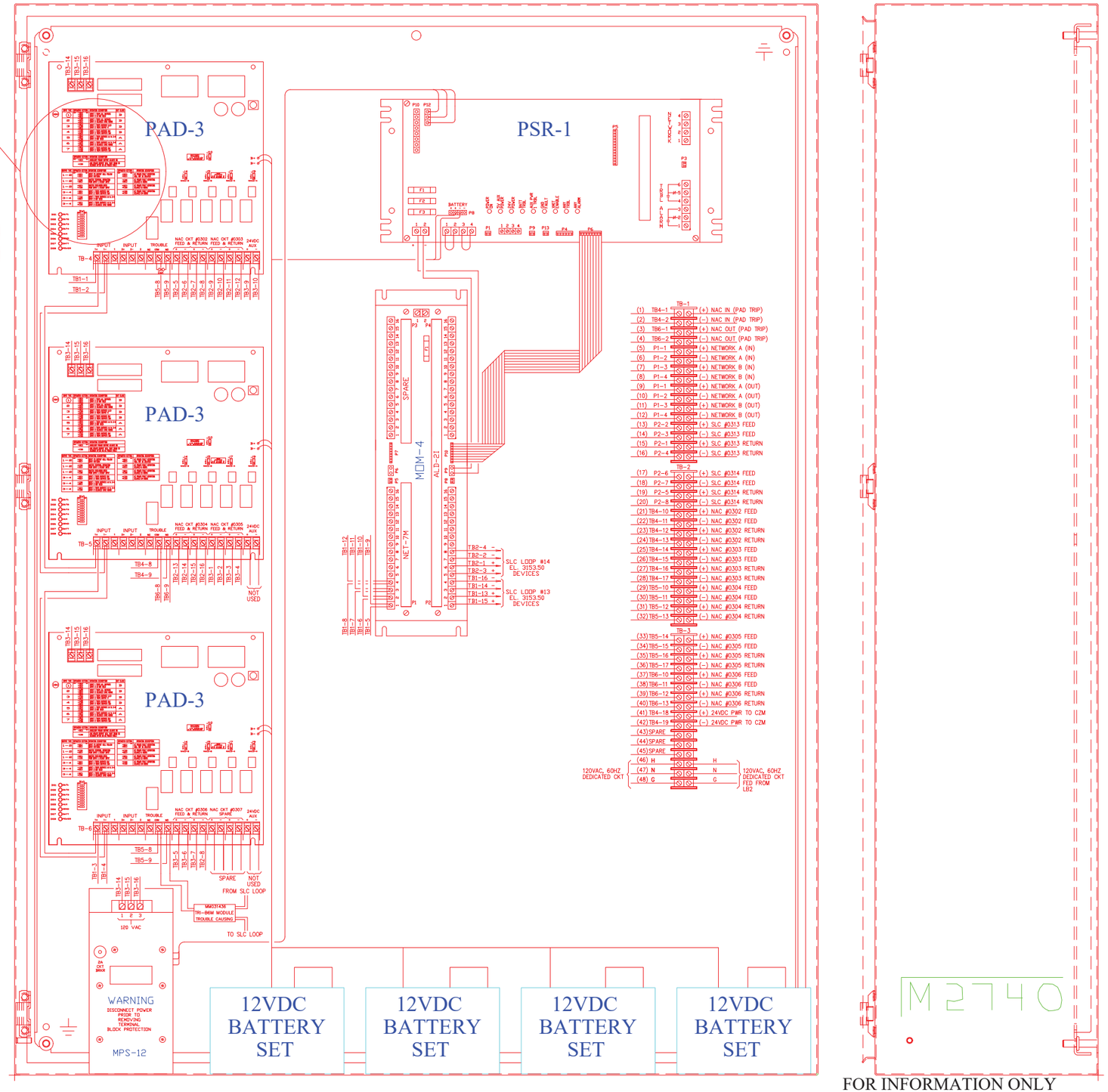

M2740

FOR INFORMATION ONLY

REVISIONS

NO.	DATE	BY	DESCRIPTION
1	6/13/05	MSG	Per Client for Approval

AS-BUILT
6/13/05

FLOOR TERMINAL JUNCTION BOX #3
OF THE
FIRE DETECTION
AND ALARM SYSTEM
FOR
GLEN CANYON DAM
FIRE PROTECTION SYSTEM
805 Bureau Street Page, AZ 86040-1477

Hiller Systems Inc
FIRE DETECTION & SUPPRESSION DESIGN, SALES & INSTALLATION
833 PRINCIPAL LANE
CHESAPEAKE, VIRGINIA 23320
TEL: (757)-549-9123
FAX: (757)-549-1083

DESIGNED BY: MSG	DRAWN BY: MSG
CHECKED BY: RMF	REVISION No. 0
DATE: JUN 25, 2004	
DWG No. VM4070-17	SCALE: NONE

SHEET NUMBER
17
OF 31 TOTAL SHEETS
DATE OF ORIGINAL ISSUE
JUN 25, 2004

JOB No. 4070	JOB CODE: VM

FLOOR TERMINAL JUNCTION BOX #4 - LEVEL 2

INPUT TYPE	DIPSWITCH SETTING	OPERATING DESCRIPTION	CKT
1		INPUT 1 TRIPS ALL OUTPUTS INPUT 2 IS NOT USED	B
2		INPUT 1 TRIPS ALL OUTPUTS INPUT 2 SILENCES SYNC HORNS	B
3		INPUT 1 TRIPS OUTPUTS 1,2,3 INPUT 2 TRIPS OUTPUT 4	B
4		INPUT 1 TRIPS OUTPUTS 1&2 INPUT 2 TRIPS OUTPUTS 3&4	B
(5)		INPUT 1 TRIPS OUTPUTS 1-2 & 3-4 INPUT 2 NOT USED	A
6		INPUT 1 TRIPS OUTPUTS 1-2 & 3-4 INPUT 2 SILENCES SYNC HORNS	A
7		INPUT 1 TRIPS OUTPUTS 1&2 INPUT 2 TRIPS OUTPUTS 3&4	A

SETTING	OPERATING DESCRIPTION
	AUXILIARY POWER OUTPUT ALWAYS ON
	AUX POWER OUTPUT WILL SHUT DOWN 30 SECONDS AFTER AN AC POWER FAULT

OUTPUT	SETTING	OPERATING DESCRIPTION
1-2		INPUT 1'S OUTPUT WILL FOLLOW INPUT PATTERN
1-2		MASTER TEMPORAL OPERATION FROM INPUT 1 STEADY INPUT
1-2		MASTER SYNC/HORN OPER. FROM INPUT 1 STEADY INPUT
3-4		INPUT 1 TRIPS OUTPUTS 1&2 INPUT 2 TRIPS OUTPUTS 3&4
3-4		INPUT 1 TRIPS OUTPUTS 1-2 & 3-4 INPUT 2 NOT USED
3-4		INPUT 1 TRIPS OUTPUTS 1-2 & 3-4 INPUT 2 SILENCES SYNC HORNS

SETTING	OPERATING DESCRIPTION
	AC POWER FAULT REPORTING WILL NOT BE DELAYED
	AC POWER FAULT REPORTING DELAYED 6 HOURS
	AC POWER FAULT REPORTING DELAYED 15 HOURS
	AC POWER FAULT REPORTING DELAYED 24 HOURS

DS1 OUT1
DS2 OUT2
DS3 OUT3
DS4 OUT4
DS5 AUX
DS6 GRND
DS7 BATT
DS8 POWER

SW1

PAD-3 DIP SWITCH SETTINGS

(TYPICAL OF ALL PAD-3's)

PAD-3

PAD-3

PAD-3

PSR-1

MOM-4

ALD-21

NET-7M

SLC LOOP #12 SPARE

SLC LOOP #11 EL. 3153.50 DEVICES

(1)	TB4-1	TB-1	(+) NAC IN (PAD TRIP)
(2)	TB4-2		(-) NAC IN (PAD TRIP)
(3)	TB6-1		(+) NAC OUT (PAD TRIP)
(4)	TB6-2		(-) NAC OUT (PAD TRIP)
(5)	P1-1		(+) NETWORK A (IN)
(6)	P1-2		(-) NETWORK A (IN)
(7)	P1-3		(+) NETWORK B (IN)
(8)	P1-4		(-) NETWORK B (IN)
(9)	P1-1		(+) NETWORK A (OUT)
(10)	P1-2		(-) NETWORK A (OUT)
(11)	P1-3		(+) NETWORK B (OUT)
(12)	P1-4		(-) NETWORK B (OUT)
(13)	P2-2		(+) SLC #0411 FEED
(14)	P2-3		(-) SLC #0411 FEED
(15)	P2-1		(+) SLC #0411 RETURN
(16)	P2-4		(-) SLC #0411 RETURN
(17)	TB4-10	TB-2	(+) NAC #0402 FEED
(18)	TB4-11		(-) NAC #0402 FEED
(19)	TB4-12		(+) NAC #0402 RETURN
(20)	TB4-13		(-) NAC #0402 RETURN
(21)	TB4-14		(+) NAC #0403 FEED
(22)	TB4-15		(-) NAC #0403 FEED
(23)	TB4-16		(+) NAC #0403 RETURN
(24)	TB4-17		(-) NAC #0403 RETURN
(25)	TB5-10		(+) NAC #0404 FEED
(26)	TB5-11		(-) NAC #0404 FEED
(27)	TB5-12		(+) NAC #0404 RETURN
(28)	TB5-13		(-) NAC #0404 RETURN
(29)	TB5-14		(+) NAC #0405 FEED
(30)	TB5-15		(-) NAC #0405 FEED
(31)	TB5-16		(+) NAC #0405 RETURN
(32)	TB5-17		(-) NAC #0405 RETURN
(33)	TB6-10	TB-3	(+) NAC #0406 FEED
(34)	TB6-11		(-) NAC #0406 FEED
(35)	TB6-12		(+) NAC #0406 RETURN
(36)	TB6-13		(-) NAC #0406 RETURN
(37)	TB6-14		(+) NAC #0407 FEED
(38)	TB6-15		(-) NAC #0407 FEED
(39)	TB6-16		(+) NAC #0407 RETURN
(40)	TB6-17		(-) NAC #0407 RETURN
(41)	TB4-18		(+) 24VDC PWR TO CZM
(42)	TB4-19		(-) 24VDC PWR TO CZM
(43)	SPARE		
(44)	SPARE		
(45)	SPARE		
(46)	H	H	120VAC, 60HZ DEDICATED CKT FED FROM LB2
(47)	N	N	
(48)	G	G	
(49)	(+) NAC-1	TB-7	(+) NAC-1
(50)	(-) NAC-1		(-) NAC-1
(51)	SPARE		SPARE
(52)	SPARE		SPARE
(53)	(+) NETWORK A (IN)		(+) NETWORK A (IN)
(54)	(-) NETWORK A (IN)		(-) NETWORK A (IN)
(55)	(+) NETWORK B (IN)		(+) NETWORK B (IN)
(56)	(-) NETWORK B (IN)		(-) NETWORK B (IN)
(57)	(+) NETWORK A (OUT)		(+) NETWORK A (OUT)
(58)	(-) NETWORK A (OUT)		(-) NETWORK A (OUT)
(59)	(+) NETWORK B (OUT)		(+) NETWORK B (OUT)
(60)	(-) NETWORK B (OUT)		(-) NETWORK B (OUT)

120VAC, 60HZ DEDICATED CKT

MAR97A36 TRI-ROM MODULE TROUBLE CAUSING

FROM SLC LOOP

TO SLC LOOP

120 VAC

WARNING
DISCONNECT POWER SUPPLY PRIOR TO REMOVING TERMINAL BLOCK PROTECTION

MPS-12

12VDC BATTERY SET

12VDC BATTERY SET

12VDC BATTERY SET

12VDC BATTERY SET

M2741

FOR INFORMATION ONLY

REVISIONS

NO.	DRWN	BY	DESCRIPTION
1	MSG	RMF	ADDED SHEET 18

AS-BUILT
6/13/05

FLOOR TERMINAL JUNCTION BOX #4
OF THE
FIRE DETECTION
AND ALARM SYSTEM
FOR
GLEN CANYON DAM
FIRE PROTECTION SYSTEM
Page, AZ. 86040-1477
805 Bureau Street

Hiller Systems Inc
FIRE DETECTION & SUPPRESSION ENGINEERING & INSTALLATION
833 PRINCIPAL LANE
CHESAPEAKE, VIRGINIA 23320
TEL: (757)-549-9123
FAX: (757)-549-1083

DESIGNED BY: MSG	DRAWN BY: MSG
CHECKED BY: RMF	REVISION No. 0
DATE: JUN 25, 2004	
DWG No. VM4070-18	SCALE: NONE

SHEET NUMBER
18
OF 31 TOTAL SHEETS
DATE OF ORIGINAL ISSUE
JUN 25, 2004

JOB No: 4070 | JOB CODE: VM

FLOOR TERMINAL JUNCTION BOX #5 - LEVEL 2

INPUT TYPE	DIPSWITCH SETTING	OPERATING DESCRIPTION	CKT
1		INPUT 1 TRIPS ALL OUTPUTS INPUT 2 IS NOT USED	B
2		INPUT 1 TRIPS ALL OUTPUTS INPUT 2 SILENCES SYNC HORNS	B
3		INPUT 1 TRIPS OUTPUTS 1,2,3 INPUT 2 TRIPS OUTPUT 4	B
4		INPUT 1 TRIPS OUTPUTS 1&2 INPUT 2 TRIPS OUTPUTS 3&4	B
(5)		INPUT 1 TRIPS OUTPUTS 1-2 & 3-4 INPUT 2 NOT USED	A
6		INPUT 1 TRIPS OUTPUTS 1-2 & 3-4 INPUT 2 SILENCES SYNC HORNS	A
7		INPUT 1 TRIPS OUTPUTS 1&2 INPUT 2 TRIPS OUTPUTS 3&4	A

SETTING	OPERATING DESCRIPTION
	AUXILIARY POWER OUTPUT ALWAYS ON
	AUX POWER OUTPUT WILL SHUT DOWN 30 SECONDS AFTER AN AC POWER FAULT

OUTPUT	SETTING	OPERATING DESCRIPTION
1-2		INPUT 1'S OUTPUT WILL FOLLOW INPUT PATTERN
1-2		MASTER TEMPORAL OPERATION FROM INPUT 1 STEADY INPUT
1-2		MASTER SYNC/HORN OPER FROM INPUT 1 STEADY INPUT
3-4		INPUT 1 TRIPS OUTPUTS 1&2 INPUT 2 TRIPS OUTPUTS 3&4
3-4		INPUT 1 TRIPS OUTPUTS 1-2 & 3-4 INPUT 2 NOT USED
3-4		INPUT 1 TRIPS OUTPUTS 1-2 & 3-4 INPUT 2 SILENCES SYNC HORNS

SETTING	OPERATING DESCRIPTION
	AC POWER FAULT REPORTING WILL NOT BE DELAYED
	AC POWER FAULT REPORTING DELAYED 6 HOURS
	AC POWER FAULT REPORTING DELAYED 15 HOURS
	AC POWER FAULT REPORTING DELAYED 24 HOURS

DS1 OUT1
DS2 OUT2
DS3 OUT3
DS4 OUT4
DS5 AUX
DS6 GRND
DS7 BATT
DS8 POWER

SW1

PAD-3 DIP SWITCH SETTINGS

(TYPICAL OF ALL PAD-3's)

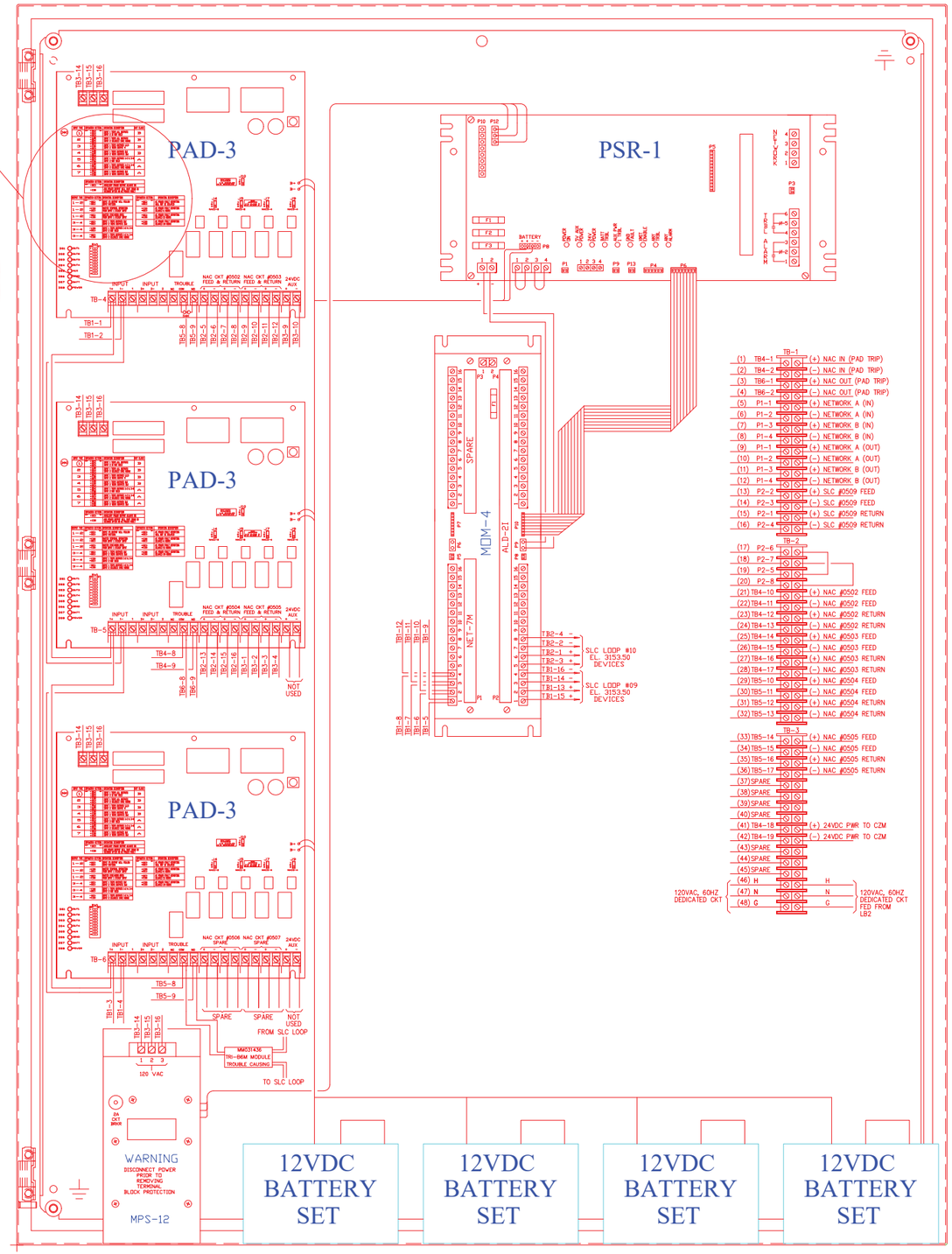

M2742

FOR INFORMATION ONLY

REVISIONS

NO.	DRWN	BY	DESCRIPTION
1	MSG	RMF	AS-BUILT per Approval
2	MSG	RMF	AS-BUILT per FIELD CHANGES

AS-BUILT
6/13/05

FLOOR TERMINAL JUNCTION BOX #5
OF THE
FIRE DETECTION
AND ALARM SYSTEM
FOR
GLEN CANYON DAM
FIRE PROTECTION SYSTEM
Page, AZ 86040-1477
805 Bureau Street

Hiller Systems Inc
FIRE DETECTION & SUPPRESSION SYSTEMS ENGINEERS
833 PRINCIPAL LANE
CHESAPEAKE, VIRGINIA 23320
TEL: (757)-549-9123
FAX: (757)-549-1083

DESIGNED BY: MSG	DRAWN BY: MSG
CHECKED BY: RMF	REVISION No.: 0
DATE: JUN 25, 2004	
DWG No.: VM4070-19	SCALE: NONE

SHEET NUMBER
19
OF 31 TOTAL SHEETS
DATE OF ORIGINAL ISSUE
JUN 25, 2004

JOB No.: 4070 | JOB CODE: VM

FLOOR TERMINAL JUNCTION BOX #6 - LEVEL 7

INPUT TYPE	DIPSWITCH SETTING	OPERATING DESCRIPTION	CKT
1		INPUT 1 TRIPS ALL OUTPUTS INPUT 2 IS NOT USED	B
2		INPUT 1 TRIPS ALL OUTPUTS INPUT 2 SILENCES SYNC HORNS	B
3		INPUT 1 TRIPS OUTPUTS 1,2,3 INPUT 2 TRIPS OUTPUT 4	B
4		INPUT 1 TRIPS OUTPUTS 1&2 INPUT 2 TRIPS OUTPUTS 3&4	B
(5)		INPUT 1 TRIPS OUTPUTS 1-2 & 3-4 INPUT 2 NOT USED	A
6		INPUT 1 TRIPS OUTPUTS 1-2 & 3-4 INPUT 2 SILENCES SYNC HORNS	A
7		INPUT 1 TRIPS OUTPUTS 1&2 INPUT 2 TRIPS OUTPUTS 3&4	A

OUTPUT	SETTING	OPERATING DESCRIPTION
1-2		INPUT 1'S OUTPUT WILL FOLLOW INPUT PATTERN
1-2		MASTER TEMPORAL OPERATION FROM INPUT 1 STEADY INPUT
1-2		MASTER SYNC/HORN OPER. FROM INPUT 1 STEADY INPUT
3-4		INPUT 1 TRIPS OUTPUTS 1&2 INPUT 2 TRIPS OUTPUTS 3&4
3-4		INPUT 1 TRIPS OUTPUTS 1-2 & 3-4 INPUT 2 NOT USED
3-4		INPUT 1 TRIPS OUTPUTS 1-2 & 3-4 INPUT 2 SILENCES SYNC HORNS

SETTING	OPERATING DESCRIPTION
	AUXILIARY POWER OUTPUT ALWAYS ON
	AUX POWER OUTPUT WILL SHUT DOWN 30 SECONDS AFTER AN AC POWER FAULT

SETTING	OPERATING DESCRIPTION
	AC POWER FAULT REPORTING WILL NOT BE DELAYED
	AC POWER FAULT REPORTING DELAYED 6 HOURS
	AC POWER FAULT REPORTING DELAYED 15 HOURS
	AC POWER FAULT REPORTING DELAYED 24 HOURS

SW1

DS1 OUT1
DS2 OUT2
DS3 OUT3
DS4 OUT4
DS5 AUX
DS6 GRND
DS7 BATT
DS8 POWER

PAD-3 DIP SWITCH SETTINGS

(TYPICAL OF ALL PAD-3's)

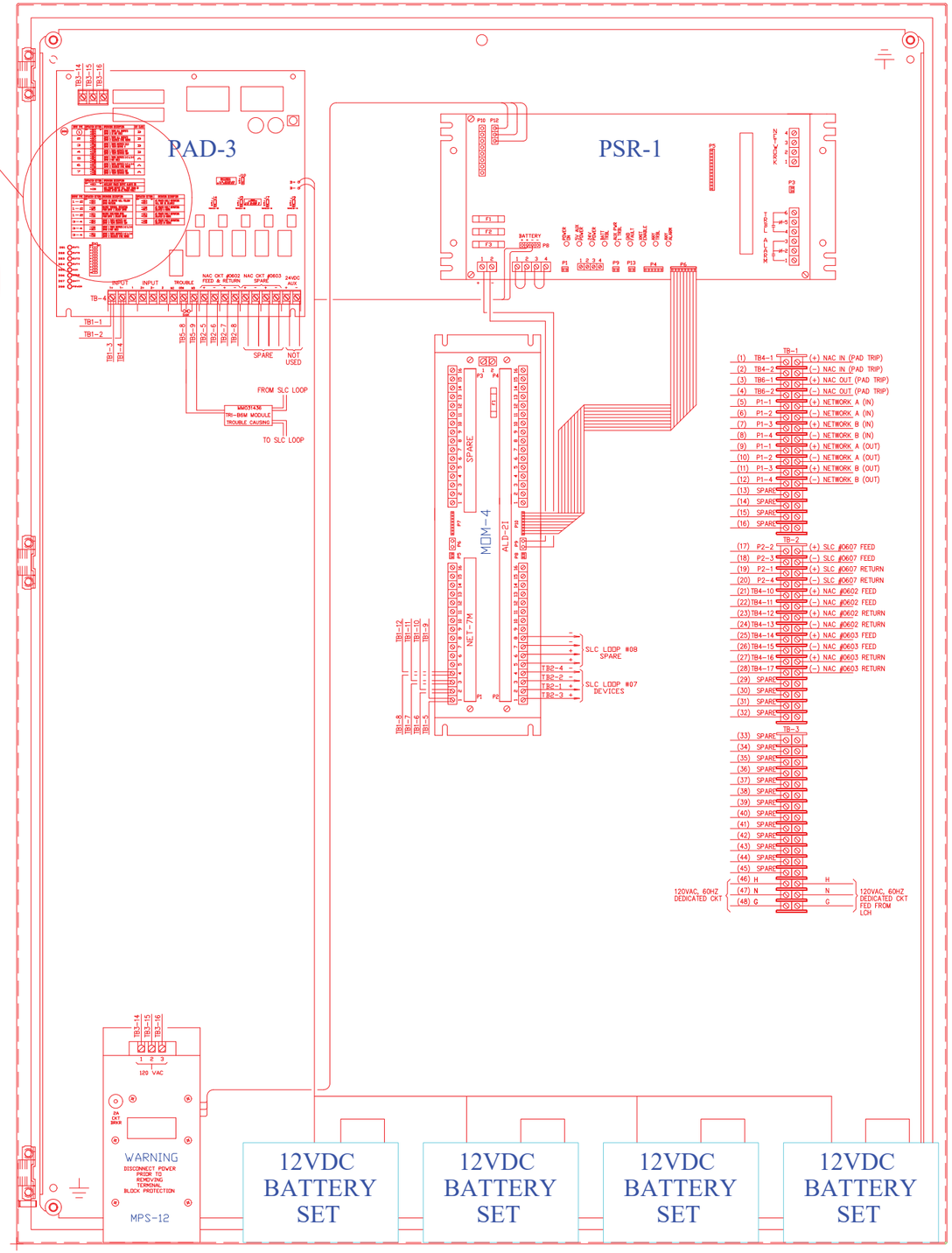

M2743

FOR INFORMATION ONLY

REVISIONS

NO	DRWN	BY	DESCRIPTION
1	MSG	RMF	Corrections per Marshall

AS-BUILT
6/13/05

FLOOR TERMINAL JUNCTION BOX #6
OF THE
FIRE DETECTION
AND ALARM SYSTEM
FOR
GLEN CANYON DAM
FIRE PROTECTION SYSTEM
805 Bureau Street
Page, AZ. 86040-1477

Hiller Systems Inc
FIRE DETECTION & SUPPRESSION DESIGN/BUILD INSTALLERS
833 PRINCIPAL LANE
CHESAPEAKE, VIRGINIA 23320
TEL: (757)-549-9123
FAX: (757)-549-1083

DESIGNED BY: MSG	DRAWN BY: MSG
CHECKED BY: RMF	REVISION No. 0
DATE: JUN 25, 2004	
DWG No. VM4070-20	SCALE: NONE

SHEET NUMBER
20
OF 31 TOTAL SHEETS
DATE OF ORIGINAL ISSUE
JUN 25, 2004

JOB No. 4070 | JOB CODE: VM

FLOOR TERMINAL JUNCTION BOX #7 -LEVEL 8

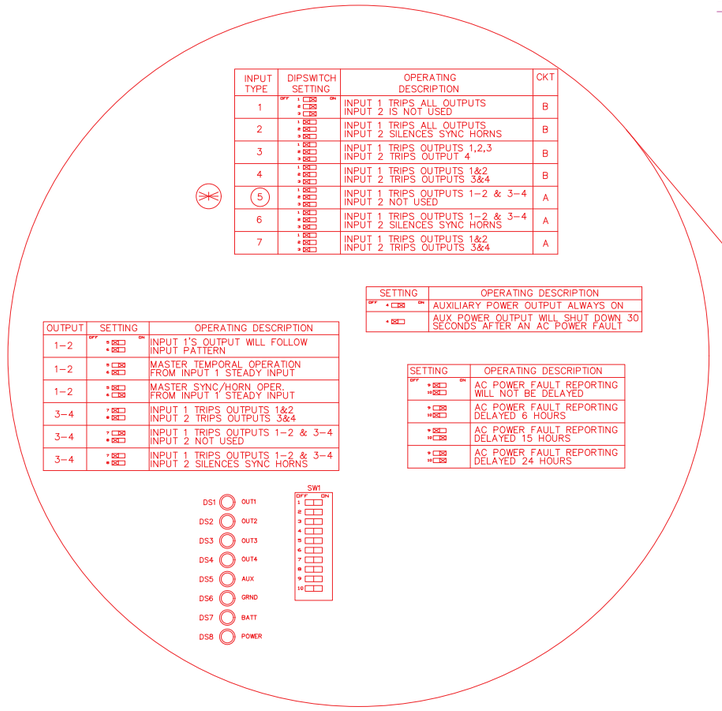

PAD-3 DIP SWITCH SETTINGS

(TYPICAL OF ALL PAD-3's)

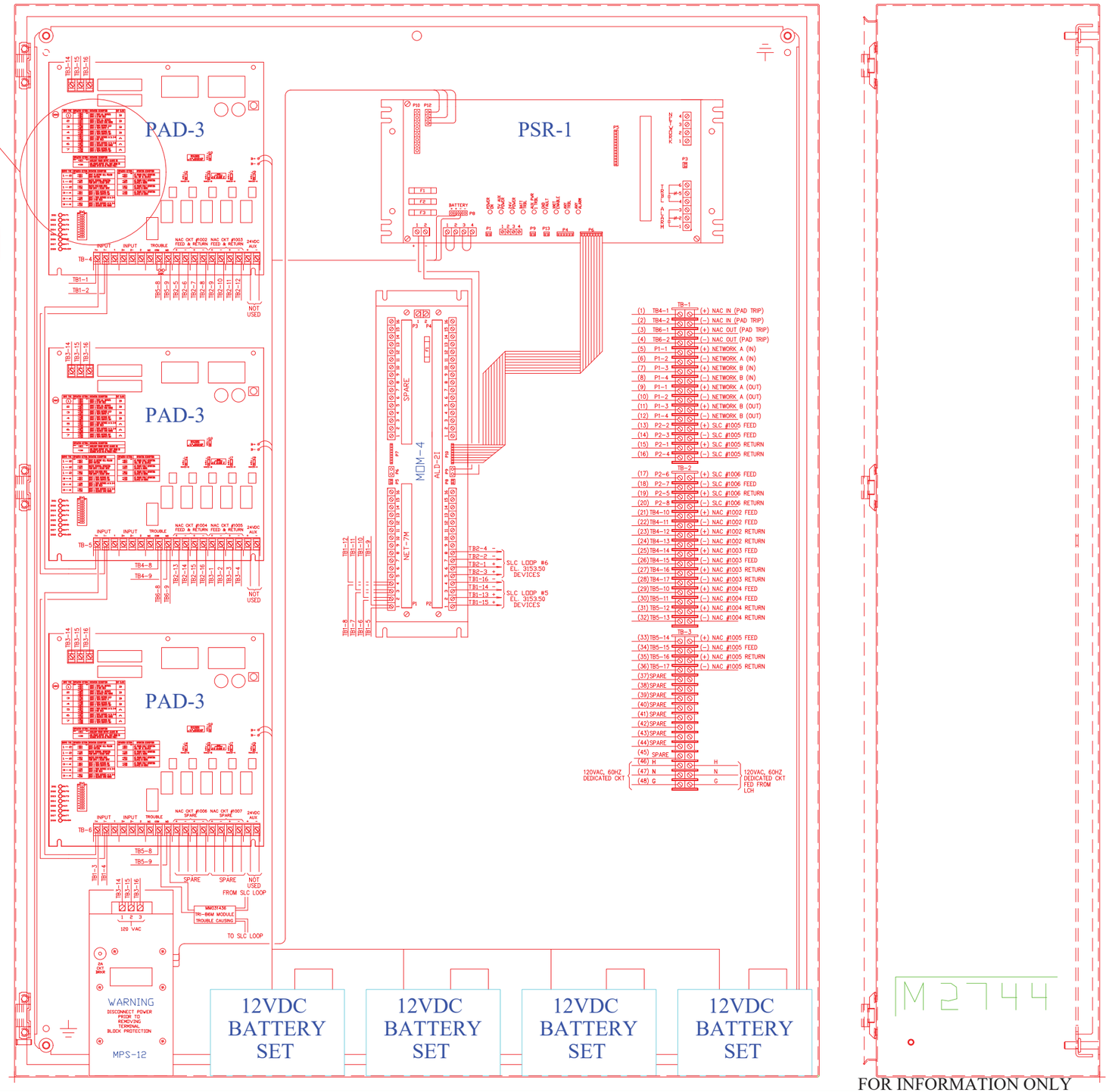

M2744

FOR INFORMATION ONLY

REVISIONS

NO	DRWN	BY	DESCRIPTION
1	MSG	RMP	ADDED SLC #1006 AND NAC #1005

AS-BUILT
6/13/05

FLOOR TERMINAL JUNCTION BOX #7
OF THE
FIRE DETECTION
AND ALARM SYSTEM
FOR
GLEN CANYON DAM
FIRE PROTECTION SYSTEM
Page, AZ. 86040-1477
805 Bureau Street

Hiller Systems Inc
FIRE DETECTION & SUPPRESSION
DESIGN/BUILD CONTRACTOR
833 PRINCIPAL LANE
CHESAPEAKE, VIRGINIA 23320
TEL.: (757)-549-9123
FAX: (757)-549-1083

DESIGNED BY: MSG	DRAWN BY: MSG
CHECKED BY: RMP	REVISION No. 0
DATE: JUN 25, 2004	
DWG No. VM4070-21	SCALE: NONE

SHEET NUMBER
21
OF 31 TOTAL SHEETS
DATE OF ORIGINAL ISSUE
JUN 25, 2004

JOB No. 4070 JOB CODE: VM

FLOOR TERMINAL JUNCTION BOX #8 - LEVEL 9

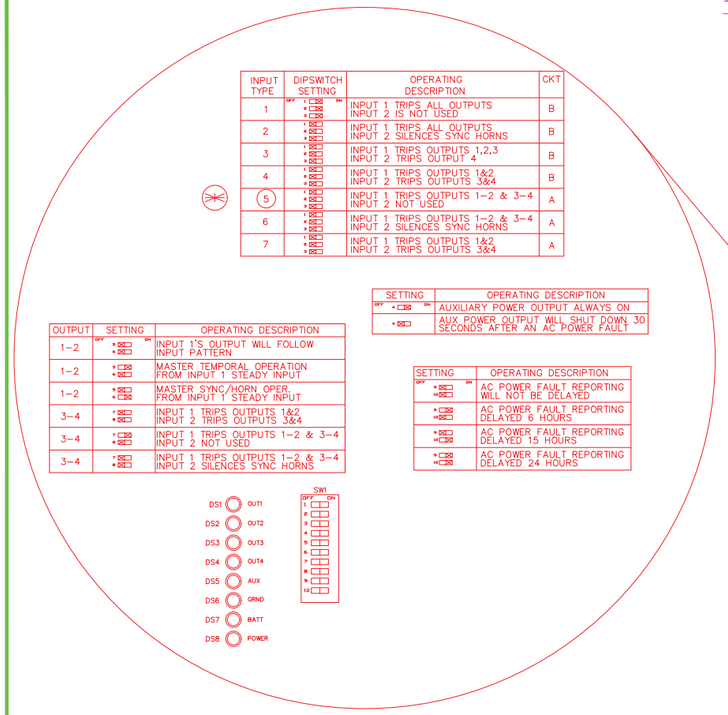

PAD-3 DIP SWITCH SETTINGS

(TYPICAL OF ALL PAD-3's)

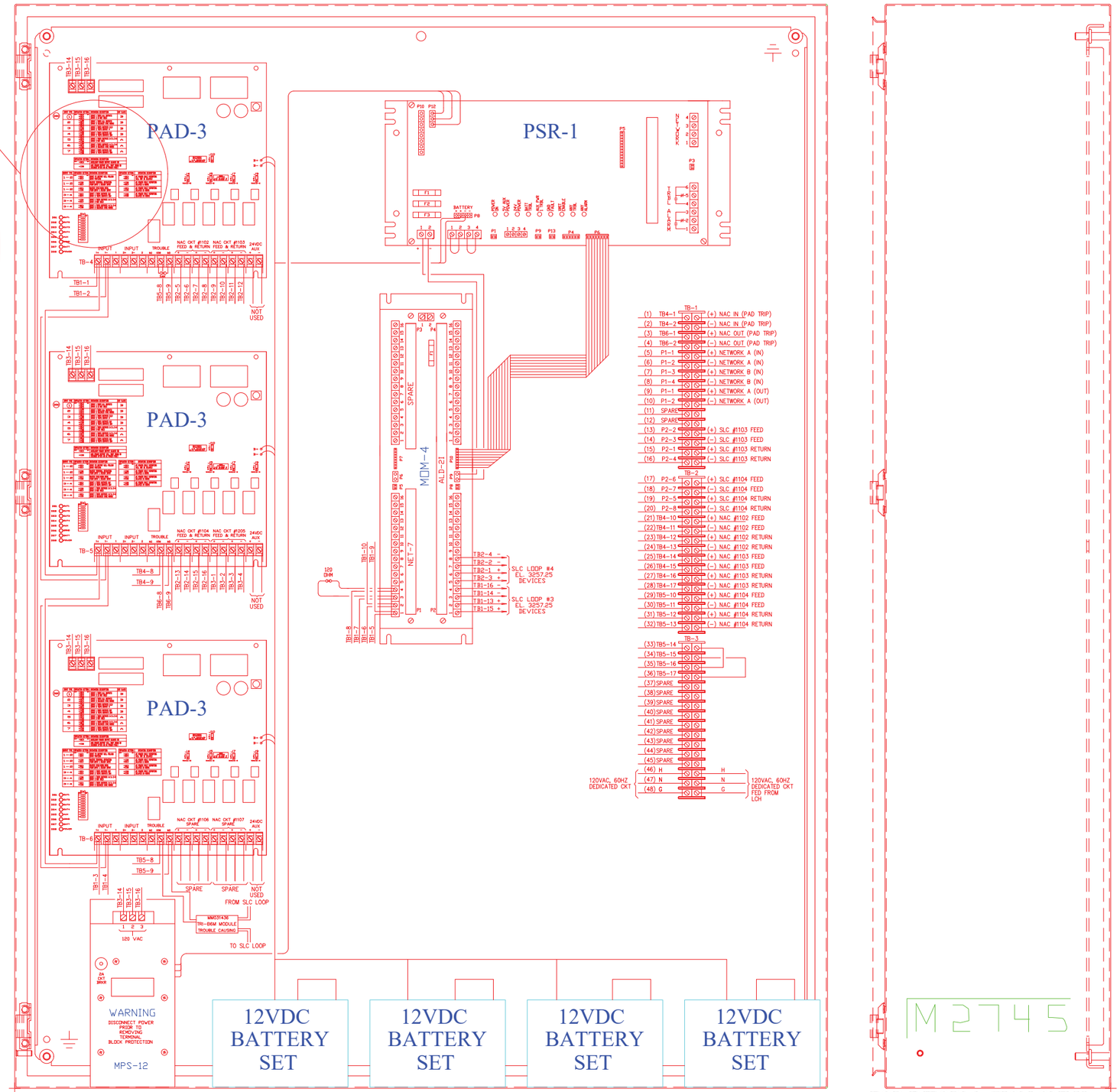

M2745

FOR INFORMATION ONLY

REVISIONS

NO	DRWN	BY	DESCRIPTION
1	MSG	RMF	CONSTRUCTION SET
2	MSG	RMF	AS-BUILT

AS-BUILT
6/13/05

FLOOR TERMINAL JUNCTION BOX #8
OF THE
FIRE DETECTION
AND ALARM SYSTEM
FOR
GLEN CANYON DAM
FIRE PROTECTION SYSTEM
805 Bureau Street, Page, AZ. 86040-1477

FIRE DETECTION & SUPPRESSION
DESIGN/BUILD SYSTEMS
Hiller Systems Inc
833 PRINCIPAL LANE
CHESAPEAKE, VIRGINIA 23320
TEL: (757)-549-9123
FAX: (757)-549-1083

DESIGNED BY: MSG	DRAWN BY: MSG
CHECKED BY: RMF	REVISION No.: 0
DATE: JUN 25, 2004	
DWG No.: VM4070-22	SCALE: NONE

SHEET NUMBER
22
OF 31 TOTAL SHEETS
DATE OF ORIGINAL ISSUE
JUN 25, 2004

JOB No.: 4070 JOB CODE: VM

FIRE ALARM ANNUNCIATOR LAYOUT

GLEN CANYON DAM
FIRE PROTECTION SYSTEM

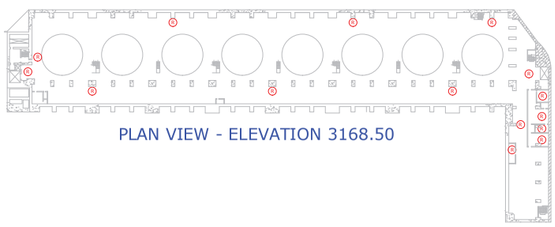

PLAN VIEW - ELEVATION 3168.50

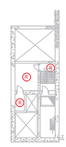

EL. 3262.87

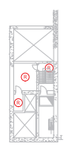

EL. 3267.87

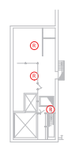

EL. 3279.12

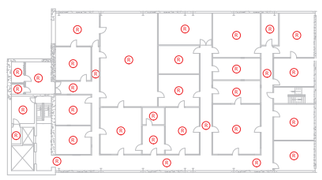

PLAN VIEW - ELEVATION 3257.25

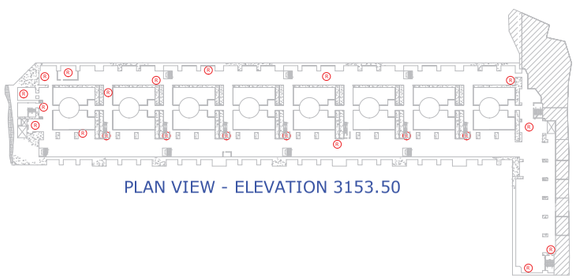

PLAN VIEW - ELEVATION 3153.50

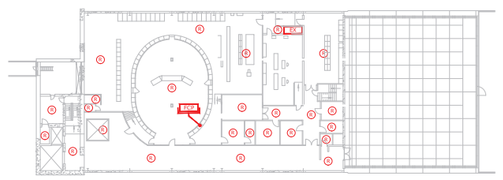

PLAN VIEW - ELEVATION 3244.24

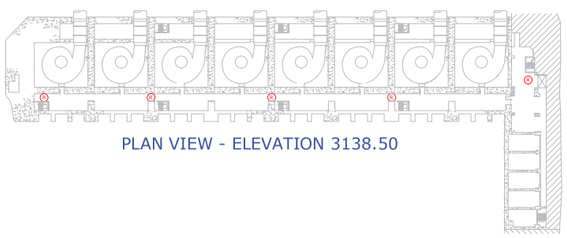

PLAN VIEW - ELEVATION 3138.50

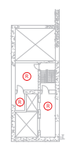

EL. 3199.75

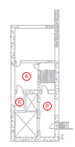

EL. 3211.00

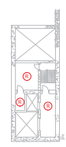

EL. 3222.25

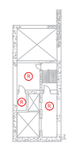

EL. 3233.50

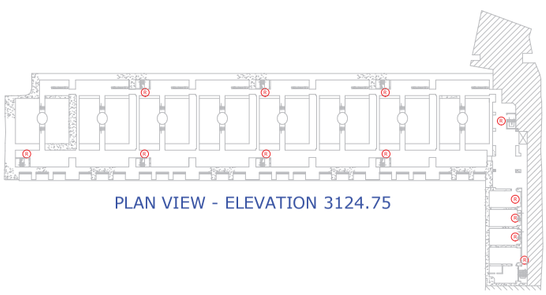

PLAN VIEW - ELEVATION 3124.75

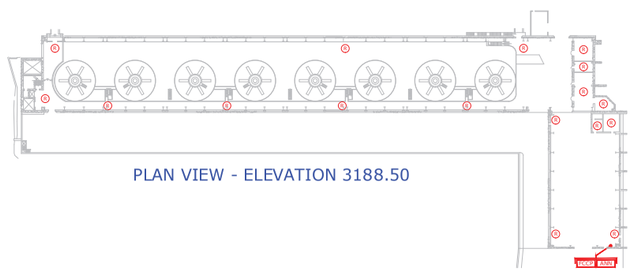

PLAN VIEW - ELEVATION 3188.50

FOR INFORMATION ONLY

M2146

LEGEND

- FCP FIRE ALARM CONTROL PANEL
- ANN GRAPHIC ANNUNCIATOR
- FDCP FIREFIGHTERS COMMAND PANEL
- EAP EXTINGUISHING AGENT PANEL

DEVICE

- FIRE ALARM MANUAL PULL STATION
- SMOKE DETECTOR
- DUCT SMOKE DETECTOR
- BEAM DETECTOR
- FLAME DETECTOR
- SPRINKLER SYSTEM TAMPER SWITCH

ACTION

- ALARM/TROUBLE ACKNOWLEDGE
- SILENCE
- RESET
- DRILL

REMOTE CONTROL SMOKE EXHAUST

OFF PURGE STAIRWELL
OFF PURGE CONTROL ROOM FLOOR
OFF PURGE OFFICE FLOOR
OFF PURGE GENERATOR FLOOR
OFF ON

LAMP TEST

POWER ON

Hiller Systems Inc
FIRE DETECTION & SUPPRESSION DESIGNERS & INSTALLERS
833 PRINCIPAL LANE
CHESAPEAKE, VIRGINIA 23320
TEL: (757)-549-9123
FAX: (757)-549-1083

Door Finish:
( ) Precision Tan,
(X) Black Texture, (Standard)
( ) Other _____.

DRAWN BY: MSG
DESIGNED BY: MSG
CHECKED BY: JMF
DATE: JAN 26, 2004
DWG No. VAM02-23
SCALE: NONE
REVISION No. 0

SHEET NUMBER 23
OF 31 TOTAL SHEETS
DATE OF ORIGINAL ISSUE
JAN 26, 2004

Hiller Systems Inc
FIRE DETECTION & SUPPRESSION DESIGNERS & INSTALLERS
833 PRINCIPAL LANE
CHESAPEAKE, VIRGINIA 23320
TEL: (757)-549-9123
FAX: (757)-549-1083

FIREFIGHTERS CMD & CTRL PANEL
OF THE
FIRE DETECTION AND ALARM SYSTEM
FOR
GLEN CANYON DAM
FIRE PROTECTION SYSTEM
805 Bureau Street Page, AZ 86040-1477

AS-BUILT
6/13/05

REVISIONS

No.	Date:	By	DESCRIPTION
0	6/25/04	MSG	Submit for Approval
1	6/13/05	MSG	AS-BUILT

FIREFIGHTERS COMMAND & CONTROL PANEL TYPICAL WIRING

LEVEL 3

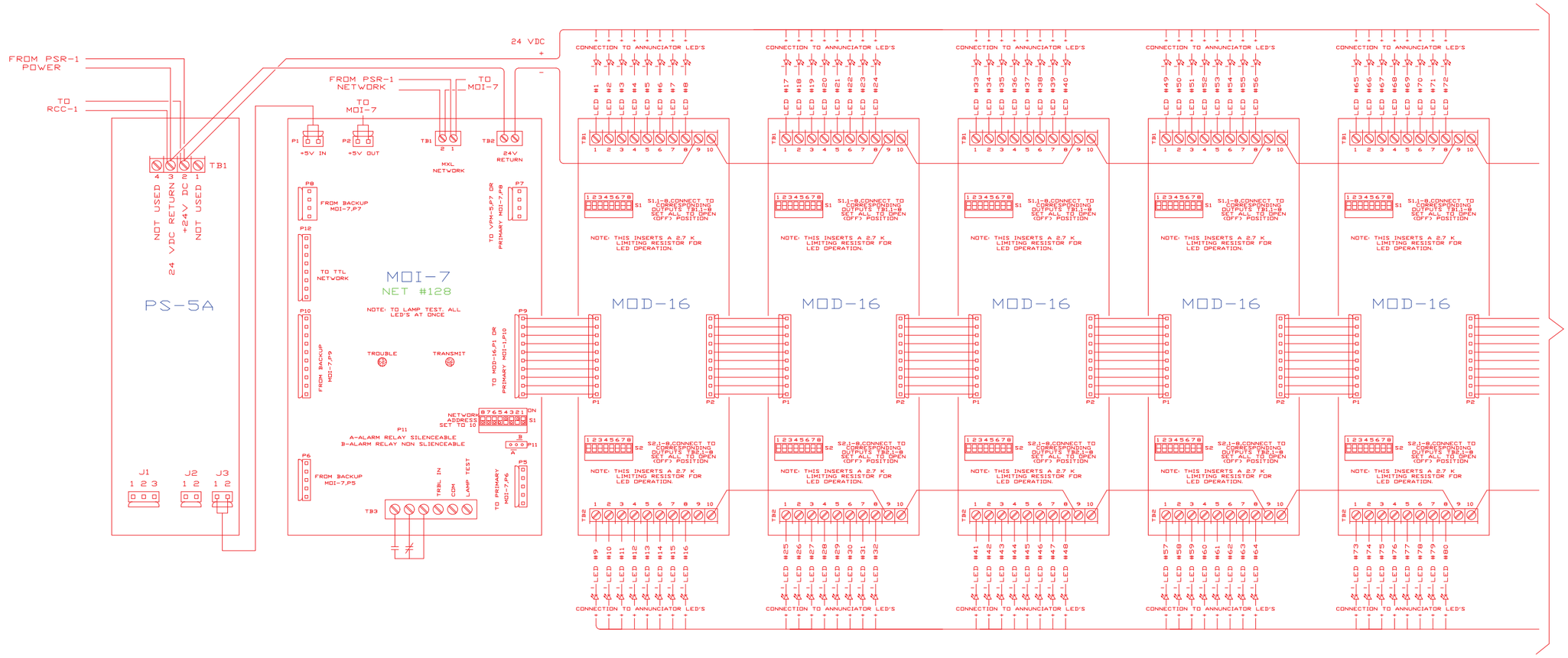

FOR INFORMATION ONLY

M2747

REVISIONS

NO.	DATE	BY	DESCRIPTION
0	6/13/05	MSG	Issued for Approval

AS-BUILT
6/13/05

FIREFIGHTERS CMD & CTRL PANEL WIRING
OF THE
FIRE DETECTION
AND ALARM SYSTEM
FOR
GLEN CANYON DAM
FIRE PROTECTION SYSTEM
805 Bureau Street
Page, AZ. 86040-1477

Hiller Systems Inc
FIRE DETECTION & SUPPRESSION DESIGN CONSULTANTS
833 PRINCIPAL LANE
CHESAPEAKE, VIRGINIA 23320
TEL: (757)-549-9123
FAX: (757)-549-1083

DESIGNED BY: MSG	DRAWN BY: MSG
CHECKED BY: RMF	REVISION No.: 0
DATE: JUN 25, 2004	
DWG No.: VM4070-24	SCALE: NONE

SHEET NUMBER
24
OF 31 TOTAL SHEETS
DATE OF ORIGINAL ISSUE
JUN 25, 2004

JOB No.: 4070 | JOB CODE: VM

FIREFIGHTERS COMMAND & CONTROL PANEL TYPICAL WIRING (CONTD)

LEVEL 3

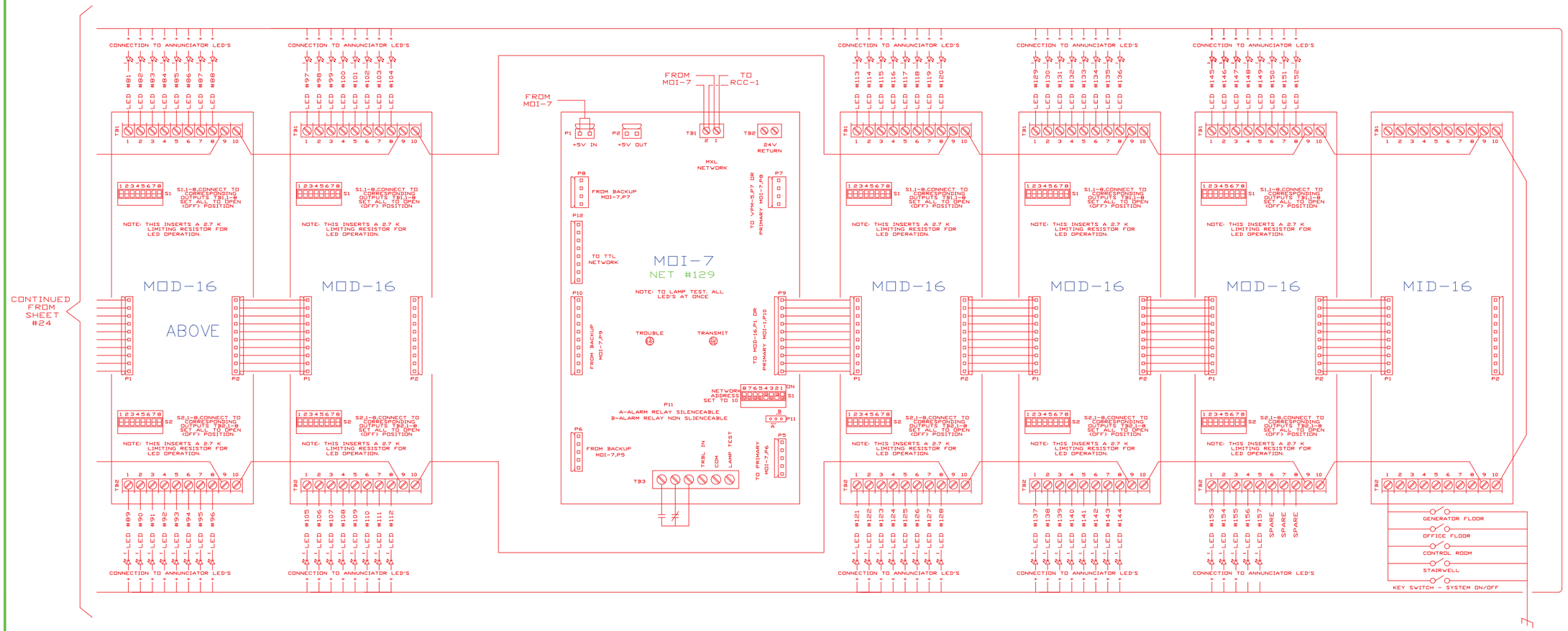

FOR INFORMATION ONLY

M2748

REVISIONS

AS-BUILT
6/13/05

FIREFIGHTERS CMD & CTRL PANEL WIRING
OF THE
FIRE DETECTION
AND ALARM SYSTEM
FOR
GLEN CANYON DAM
FIRE PROTECTION SYSTEM
805 Bureau Street Page, AZ 86040-1477

Hiller Systems Inc
FIRE DETECTION & SUPPRESSION DESIGNERS & INSTALLERS
833 PRINCIPAL LANE
CHESAPEAKE, VIRGINIA 23320
TEL: (757)-549-9123
FAX: (757)-549-1083

DESIGNED BY: MSG | DRAWN BY: MSG
CHECKED BY: RMF | REVISION No. 0
DATE: JUN 25, 2004
DWG No. VM4070-25 | SCALE: NONE

SHEET NUMBER
25
OF 31 TOTAL SHEETS
DATE OF ORIGINAL ISSUE
JUN 25, 2004

JOB No. 4070 | JOB CODE: VM

REMOTE COMMAND AND CONTROL STATION / RCC-1 - LEVEL 3

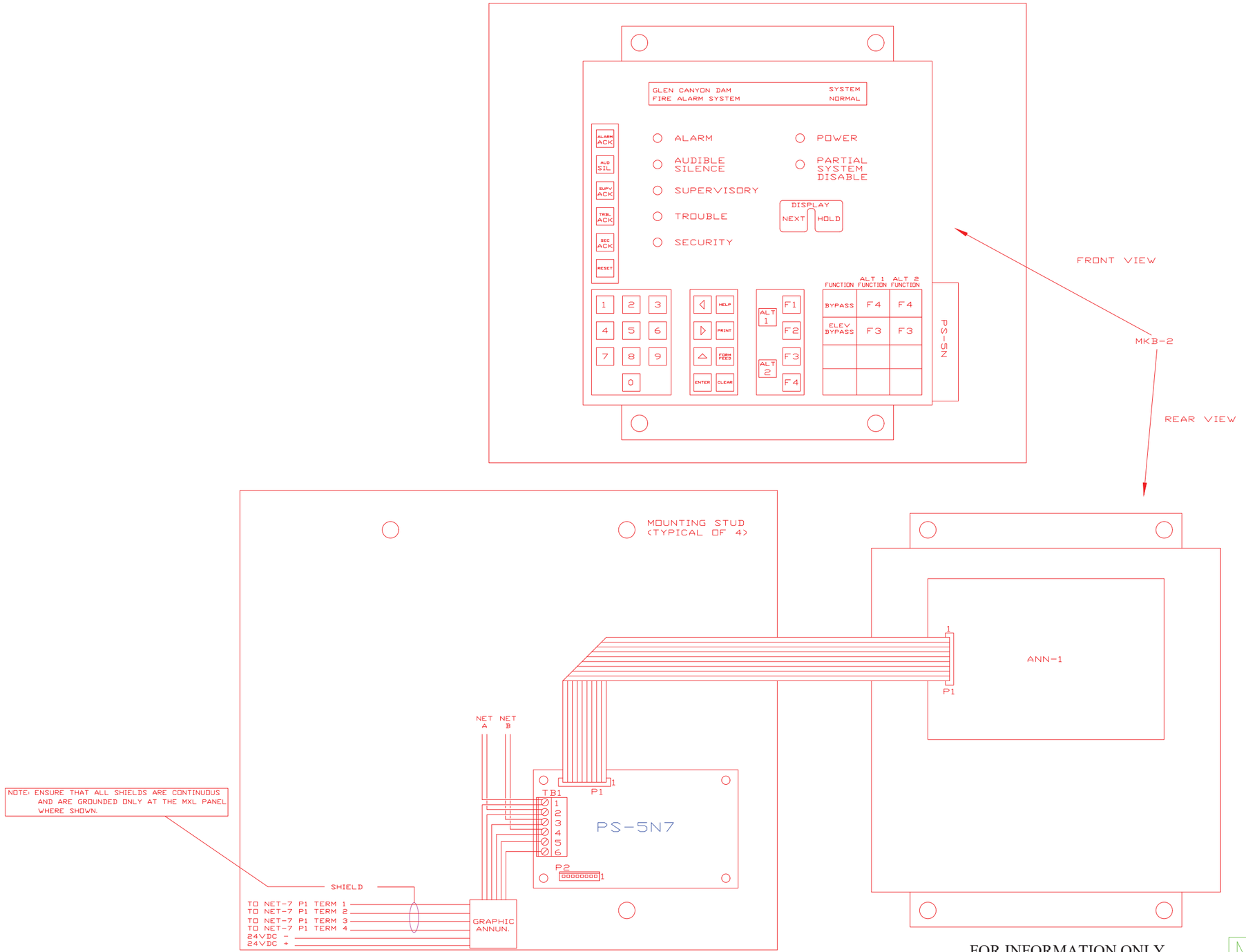

FOR INFORMATION ONLY

M2749

REVISIONS

No.	Date:	By:	DESCRIPTION
0	6/25/04	MSG	Submit for Approval
1	6/13/05	MSG	AS-BUILT

AS-BUILT
6/13/05

REMOTE ANNUNCIATION / RCC-1
OF THE
FIRE DETECTION
AND ALARM SYSTEM
FOR
GLEN CANYON DAM
FIRE PROTECTION SYSTEM
805 Bureau Street
Page, AZ 86040-1477

Hiller Systems Inc
FIRE DETECTION & SUPPRESSION DESIGNERS & INSTALLERS
833 PRINCIPAL LANE
CHESAPEAKE, VIRGINIA 23320
TEL: (757)-549-9123
FAX: (757)-549-1083

DESIGNED BY: MSG	DRAWN BY: MSG
CHECKED BY: RMF	REVISION No. 0
DATE: JUN 25, 2004	
DWG No. VM4070-26	SCALE: NONE

SHEET NUMBER
26
OF 31 TOTAL SHEETS
DATE OF ORIGINAL ISSUE
JUN 25, 2004

JOB No. 4070 | JOB CODE: VM

LINEAR THERMAL DETECTOR PANEL & WIRING DETAILS - LEVEL 1

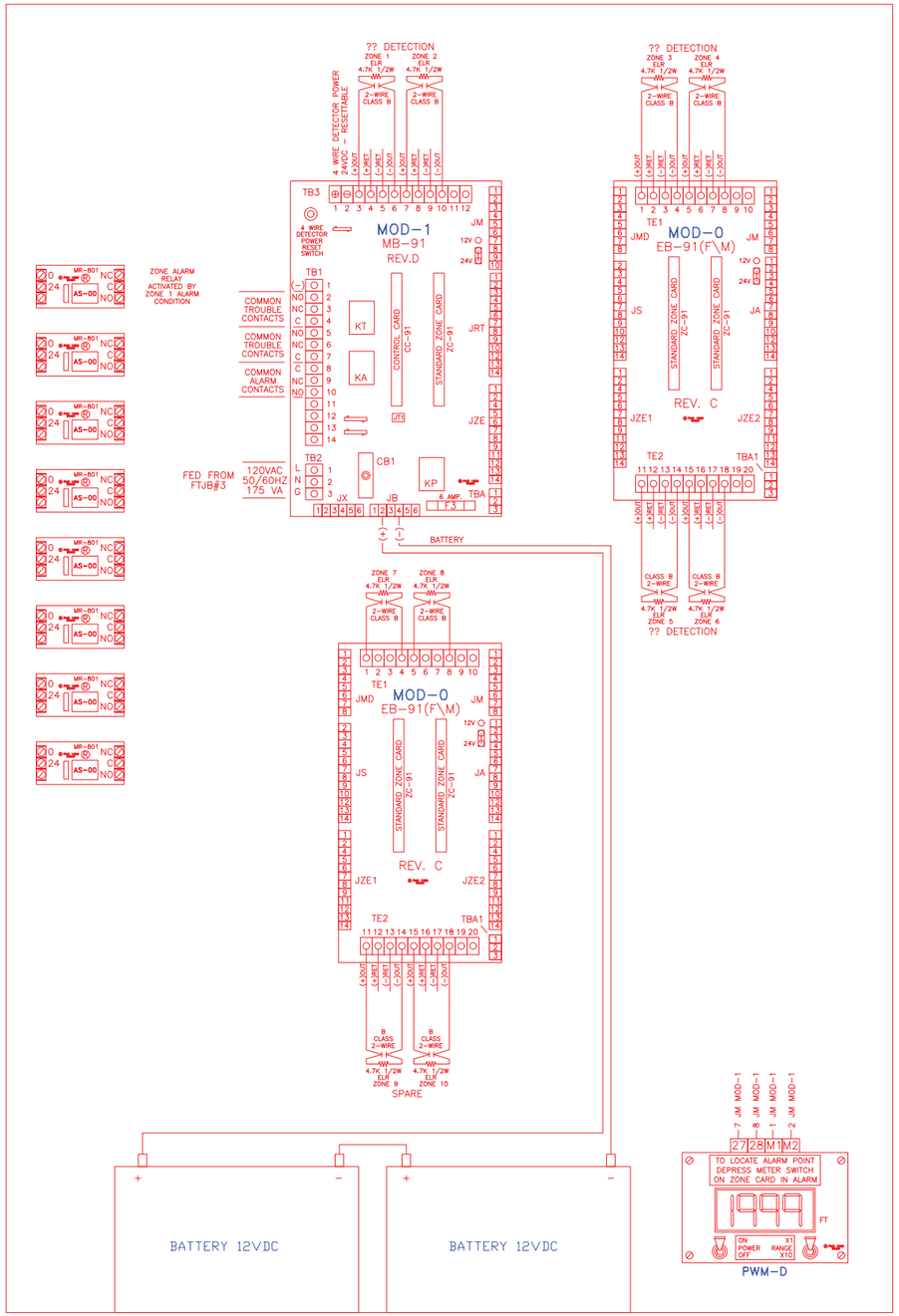

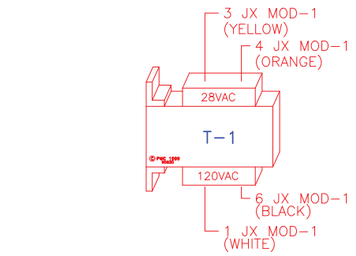

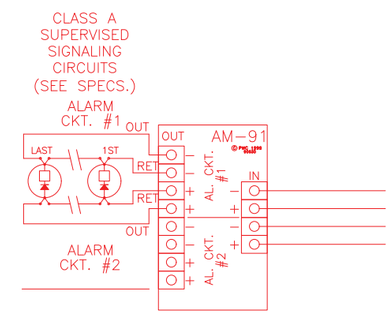

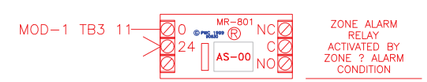

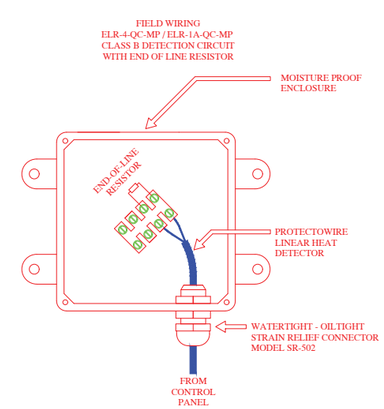

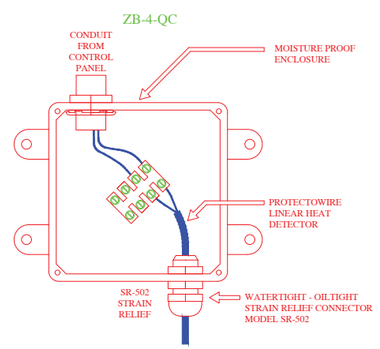

FOR INFORMATION ONLY

M2750

REVISIONS

AS-BUILT
6/13/05

LINEAR THERMAL DETECTOR WIRING
OF THE
FIRE DETECTION AND ALARM SYSTEM
FOR
GLEN CANYON DAM FIRE PROTECTION SYSTEM
805 Bureau Street Page, AZ 86040-1477

Hiller Systems Inc
FIRE DETECTION & SUPPRESSION DESIGNERS & INSTALLERS
833 PRINCIPAL LANE
CHESAPEAKE, VIRGINIA 23320
TEL: (757)-549-9123
FAX: (757)-549-1083

DESIGNED BY: MSG | DRAWN BY: MSG
CHECKED BY: RMF | REVISION No. 0
DATE: JUN 25, 2004
DWG No. VM4070-27 | SCALE: NONE

SHEET NUMBER
27
OF 31 TOTAL SHEETS
DATE OF ORIGINAL ISSUE
JUN 25, 2004

JOB No. 4070 | JOB CODE: VM

NOTE: ENSURE THAT ALL SHIELDS ARE CONTINUOUS AND ARE GROUNDED ONLY AT THE MXL PANEL.

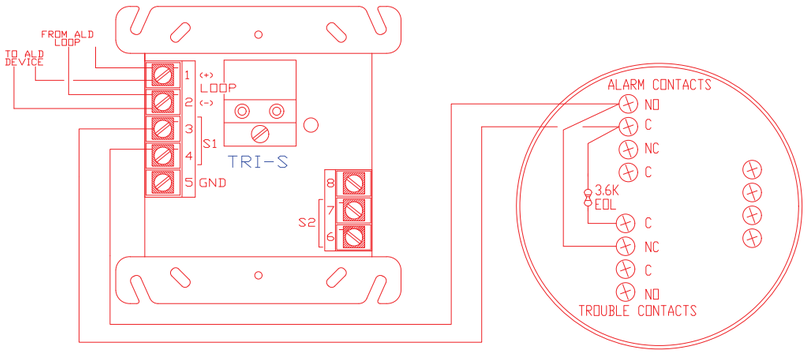

TRI-S SINGLE INPUT MODULE

SS4-A/-2 FLAME DETECTOR

NOTE: ENSURE THAT ALL SHIELDS ARE CONTINUOUS AND ARE GROUNDED ONLY AT THE MXL PANEL.

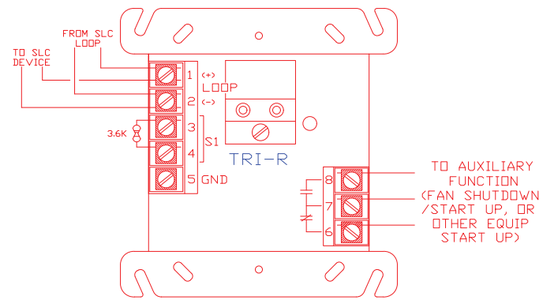

MBE PANEL FOR FAN CTRL
(TYPICAL OF AUXILIARY FUNCTIONS)

TRI-R RELAY MODULE

NOTE: ENSURE THAT ALL SHIELDS ARE CONTINUOUS AND ARE GROUNDED ONLY AT THE MXL PANEL.

AD-3I DUCT HOUSING

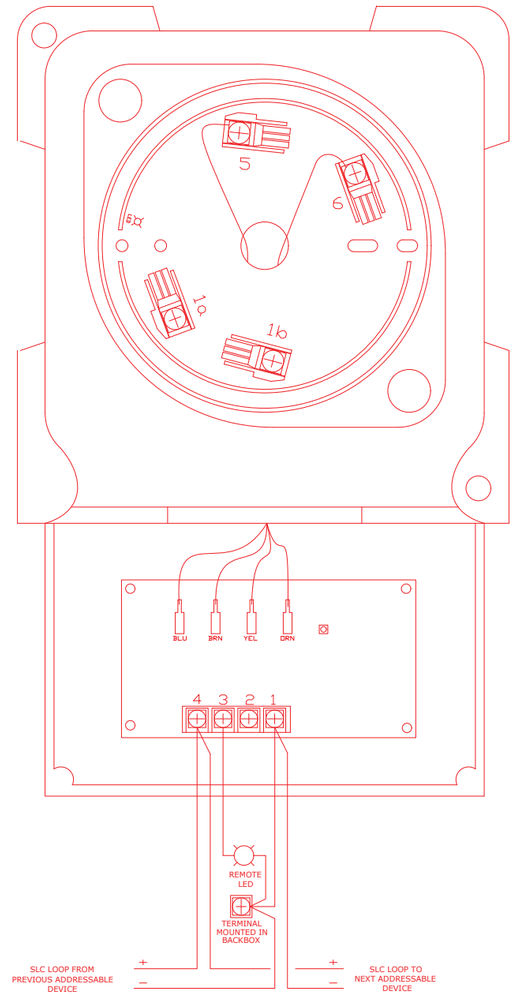

AD-3I DUCT DETECTOR HOUSING WITH ILI-1 ION DETECTOR

NOTE: ENSURE THAT ALL SHIELDS ARE CONTINUOUS AND ARE GROUNDED ONLY AT THE MXL PANEL.

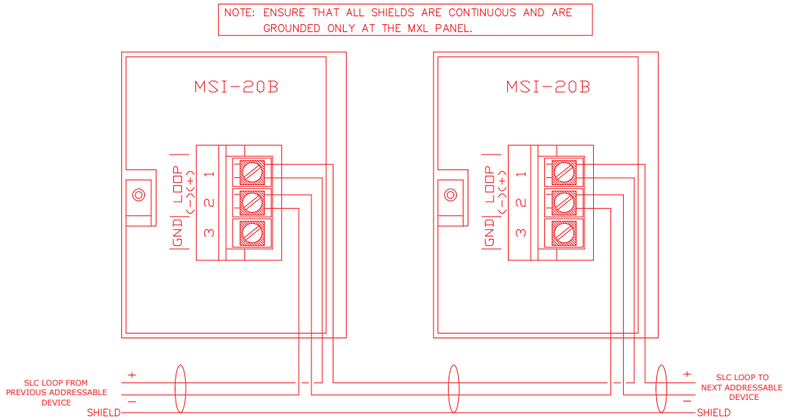

MSI-20B MANUAL PULL STATION

NOTE: ENSURE THAT ALL SHIELDS ARE CONTINUOUS AND ARE GROUNDED ONLY AT THE MXL PANEL.

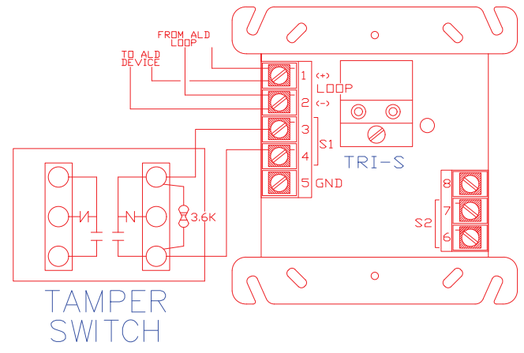

TRI-S SINGLE INPUT MODULE

NOTE: ENSURE THAT ALL SHIELDS ARE CONTINUOUS AND ARE GROUNDED ONLY AT THE MXL PANEL.

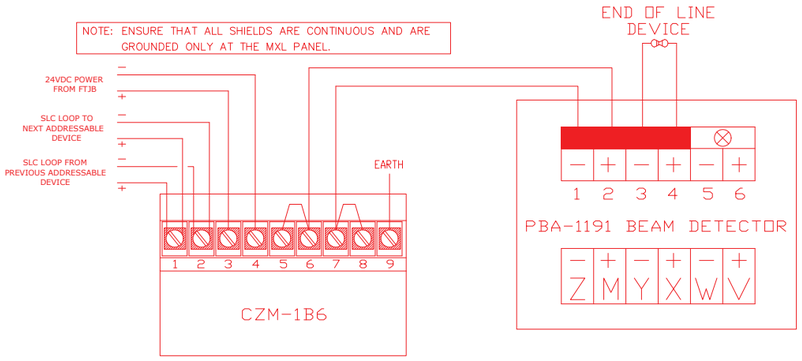

PBA-1191 BEAM DETECTOR DETECTOR AND CZM-1B6 ZONE MODULE

NOTE: ENSURE THAT ALL SHIELDS ARE CONTINUOUS AND ARE GROUNDED ONLY AT THE MXL PANEL.

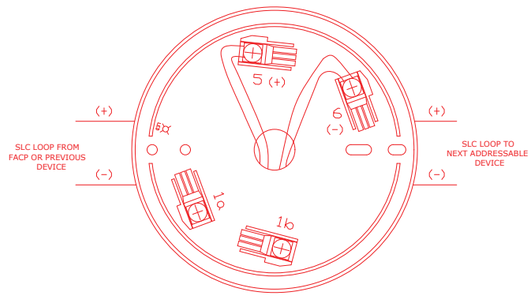

ILI-1 IONIZATION TYPE SMOKE DETECTOR IN DB-3S BASE

FOR INFORMATION ONLY

M2751

REVISIONS

No	Date	By	DESCRIPTION
1	6/25/04	MSC	Batch for approval
2	6/XX/04	MSC	As-built

AS-BUILT
6/21305

TYPICAL INITIATING DEVICE WIRING OF THE FIRE DETECTION AND ALARM SYSTEM FOR GLEN CANYON DAM FIRE PROTECTION SYSTEM
800 Bureau Street Page, AZ 86040-1477

Hiller Systems Inc
FIRE DETECTION & SUPPRESSION DESIGN, ENGINEERING & INSTALLATION
833 PRINCIPAL LANE
CHESAPEAKE, VIRGINIA 23320
TEL: (757)-549-9123
FAX: (757)-549-1083

DESIGNED BY: MSG	DRAWN BY: MSG
CHECKED BY: RMF	REVISION No. 0
DATE: JUN 25, 2004	
DWG No. VM4070-28	SCALE: NONE

SHEET NUMBER
28
OF 31 TOTAL SHEETS
DATE OF ORIGINAL ISSUE
JUN 25, 2004

JOB No. 4070 | JOB CODE: VM

REFLECTOR MOUNTING PARAMETERS

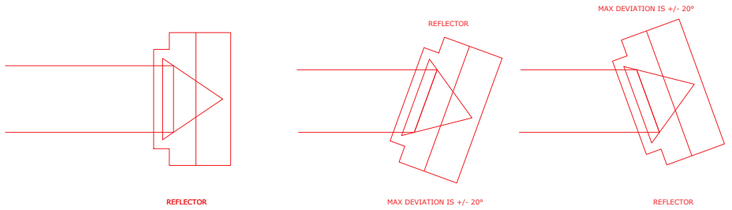

VERTICAL ADJUSTMENT RANGE OF THE OPTICAL SYSTEM - PBA-1191

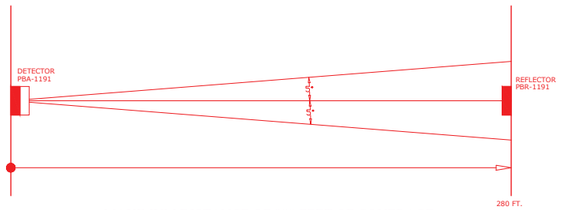

MAXIMUM DISTANCE OF 280 FEET OF COVERAGE

REFLECTOR SIZING CHART

DISTANCE PB REFLETECTOR	TYPES AND NUMBER OF REFLECTIONS
17-33 FT	1 PBR-1193
33-99 FT	1 PBR-1193
99-164 FT	1 PBR-1192
164-214 FT	4 PBR-1192
214-262 FT	9 PBR-1192
66-280 FT	1 PBR-1191

DF-30 FLAME DETECTOR

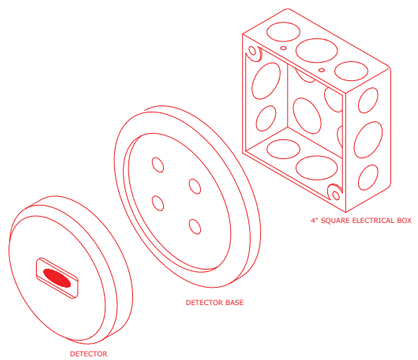

ILI-1 ION SMOKE DETECTOR

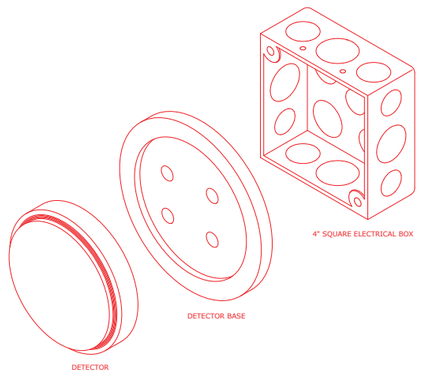

ILI-1 ION SMOKE DETECTOR IN AD-3I HOUSING

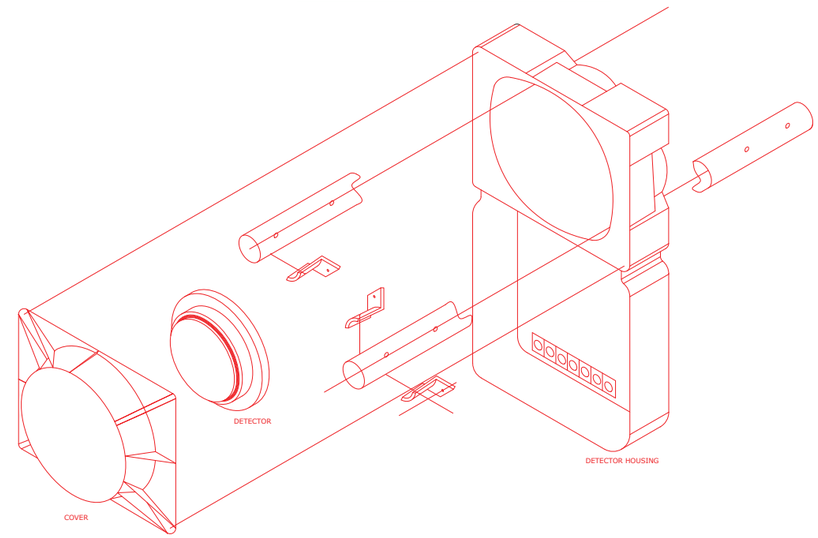

PBR-1191 REFLECTOR PLATE

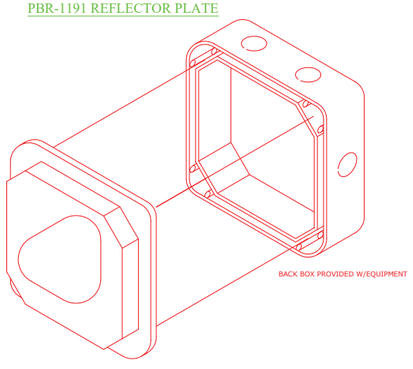

PBA-1191 BEAM DETECTOR

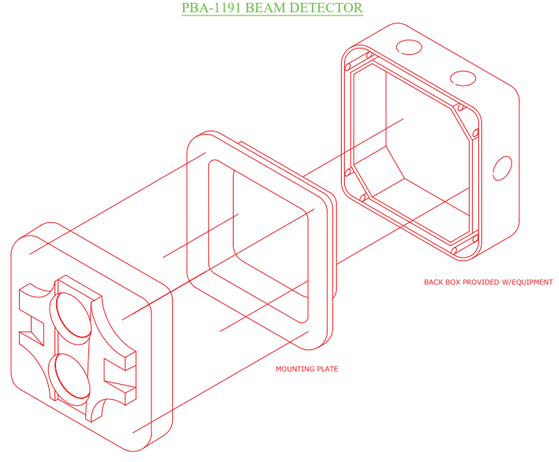

MSI-20B MANUAL PULL STATION

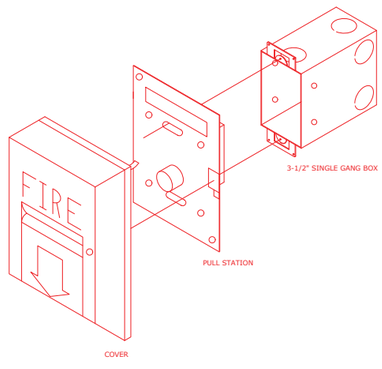

FOR INFORMATION ONLY

M 2752

REVISIONS

No.	Date	By	DESCRIPTION
0	6/25/04	MSG	Submit for Approval
1	6/13/05	MSG	AS-BUILT

AS-BUILT
6/13/05

TYPICAL INITIATING DEVICE MOUNTING
OF THE
FIRE DETECTION
AND ALARM SYSTEM
FOR
GLEN CANYON DAM
FIRE PROTECTION SYSTEM
800 Bureau Street Page, AZ 86040-1477

Hiller Systems Inc
FIRE DETECTION & SUPPRESSION DESIGNERS & INSTALLERS
833 PRINCIPAL LANE
CHESAPEAKE, VIRGINIA 23320
TEL: (757)-549-9123
FAX: (757)-549-1083

DESIGNED BY: MSG	DRAWN BY: MSG
CHECKED BY: RMF	REVISION No. 0
DATE: JUN 25, 2004	
DWG No. VM4070-29	SCALE: NONE

SHEET NUMBER
29
OF 31 TOTAL SHEETS
DATE OF ORIGINAL ISSUE
JUN 25, 2004

JOB No. 4070 | JOB CODE: VM

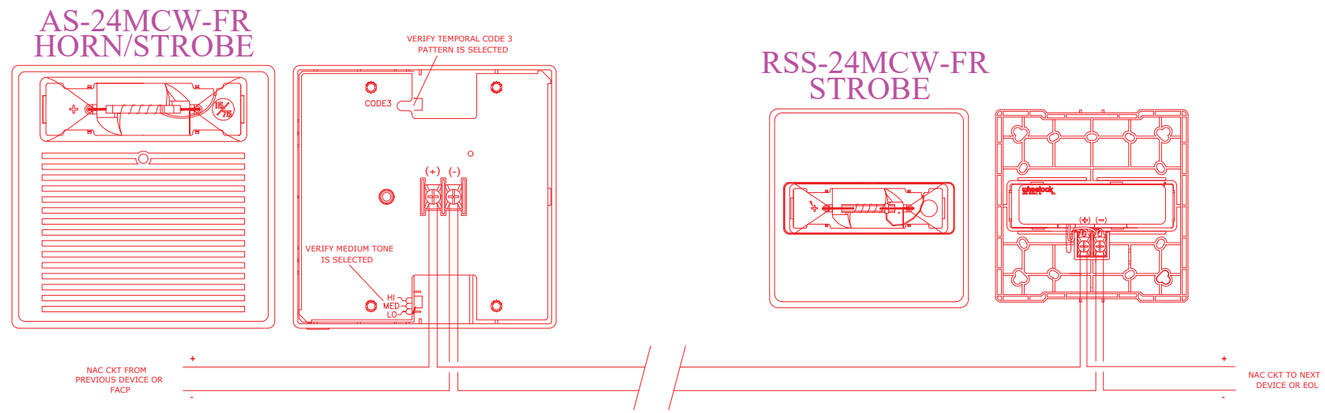

AS-SERIES HORN STROBE AND RSS-SERIES STROBE NOTIF. APPLIANCE

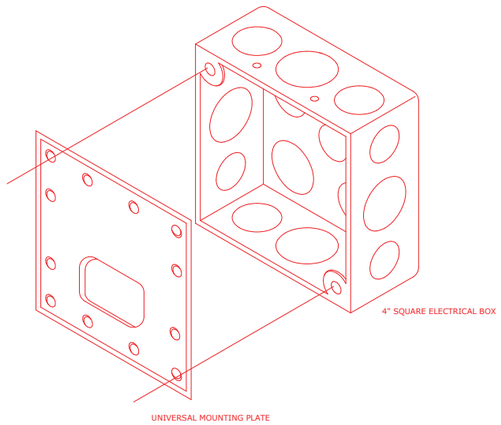

AS-SERIES HORN STROBE AND RSS-SERIES STROBE UNIVERSAL MTG PLATE

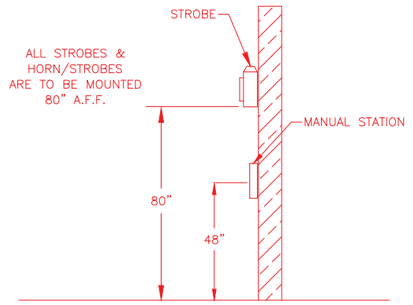

TYPICAL NOTIF. DEVICE &
MANUAL STATION MOUNTING DETAILS

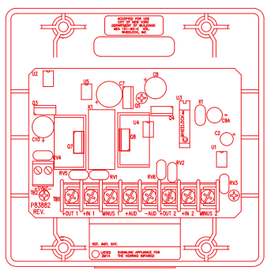

DUAL SYNCHRONIZATION MODULE

(MOUNT IN 4 – 11/16" SQUARE ELECTRICAL BOX)

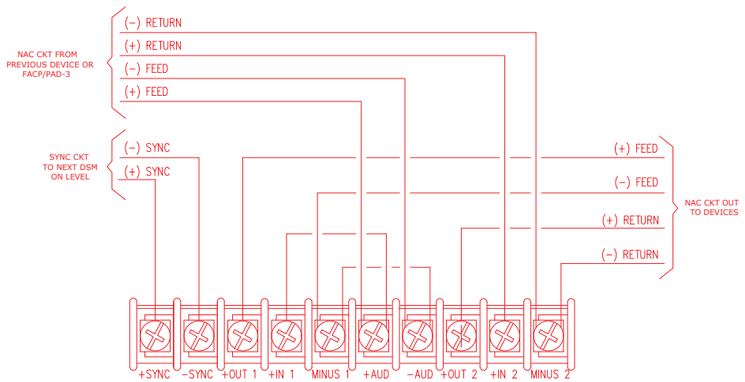

DUAL SYNCHRONIZATION MODULE WIRING

(ONE MODULE PER NAC CIRCUIT) FOR INFORMATION ONLY

M2753

REVISIONS

No.	Date:	By	DESCRIPTION
0	6/25/04	MSG	Submit for Approval
1	6/13/05	MSG	AS-BUILT

AS-BUILT
6/13/05

NOTIF. DEVICE WIRING & MOUNTING
OF THE
FIRE DETECTION
AND ALARM SYSTEM
FOR
GLEN CANYON DAM
FIRE PROTECTION SYSTEM
800 Bureau Street Page, AZ 86040-1477

Hiller Systems Inc
FIRE DETECTION & SUPPRESSION DESIGNERS & INSTALLERS
833 PRINCIPAL LANE
CHESAPEAKE, VIRGINIA 23320
TEL: (757)-549-9123
FAX: (757)-549-1083

DESIGNED BY: MSG	DRAWN BY: MSG
CHECKED BY: RMF	REVISION No. 0
DATE: JUN 25, 2004	
DWG No. VM4070-30	SCALE: NONE

SHEET NUMBER
30
OF 31 TOTAL SHEETS
DATE OF ORIGINAL ISSUE
JUN 25, 2004

JOB No. 4070 | JOB CODE: VM

24 VDC AUXILIARY POWER SUPPLY WIRING DETAILS

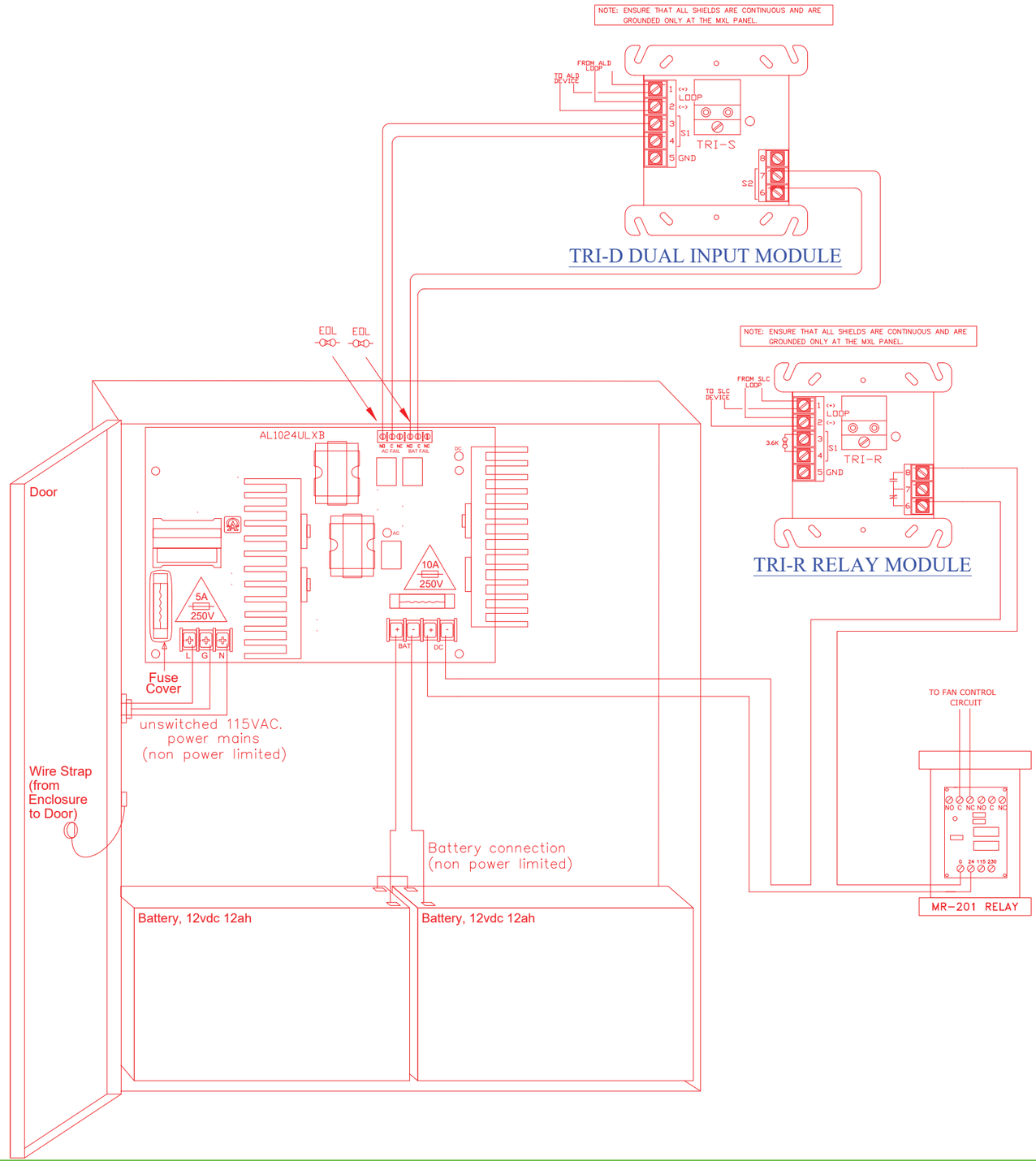

FOR INFORMATION ONLY

M2754

REVISIONS

Rev	Date	By	DESCRIPTION
1	6/13/05	JGS	AS-BUILT

AS-BUILT
6/13/05

AUX. PWR SUPPLY FOR FAN SHUTDOWN OF THE FIRE DETECTION AND ALARM SYSTEM FOR GLEN CANYON DAM FIRE PROTECTION SYSTEM
Page AZ 86040-1477
800 Bureau Street

Hiller Systems Inc
FIRE DETECTION & SUPPRESSION DESIGN & ENGINEERING
833 PRINCIPAL LANE
CHESAPEAKE, VIRGINIA 23320
TEL: (757)-549-9123
FAX: (757)-549-1083

DESIGNED BY: MSG	DRAWN BY: MSG
CHECKED BY: RMF	REVISION No. 0
DATE: JUN 25, 2004	
DWG No. VM4070-31	SCALE: NONE

SHEET NUMBER
31
OF 31 TOTAL SHEETS
DATE OF ORIGINAL ISSUE
MAR 02, 2005

JOB No. 4070 | JOB CODE: VM

SMOKE EXHAUST DISTRIBUTION BOARD

PANEL: MME MAIN BUS: XXXX AMPS 480 VOLT, 3 PHASE, 4 WIRE

LOCATION: EL. 3188.50 MAIN: LUG 63,000 MIN. SYM AMPS INTERRUPTING CAPACITY

ENTRY: FEEDER: 4/0

MOUNTING: FLOOR NOTE:

CONDUIT NUMBER	WIRE SIZE	DIRECTORY	LOAD VA	BKR AMP			BKR AMP	LOAD VA	DIRECTORY	CONDUIT NUMBER	WIRE SIZE
		PHPF1A & PHPF1B (7.6A EACH)			1	2			MPF1A & MPF1B (7.6A EACH)		
	8			25	3	4	25				8
					5	6					
		PHPF5A & PHPF5B (7.5A EACH)			7	8			MPF2A & MPF2B (7.6A EACH)		
	8			25	9	10	25				8
					11	12					
		PHPF6A & PHPF6B (7.6A EACH)			13	14			MPF3A & MPF3B (7.6A EACH)		
	8			25	15	16	25				8
					17	18					
		PHPF8A & PHPF8B (7.6A EACH)			19	20			MPF4A & MPF4B (7.6A EACH)		
	8			25	21	22	25				8
					23	24					
		PHPF9A & PHPF9B (7.6A EACH)			25	26			MPF12A & MPF12B (7.6A EACH)		
	8			25	27	28	25				8
					29	30					
		SPARE			31	32			SPARE		
					33	34					
					35	36					
		SPARE			37	38			SPARE		
					39	40					
					41	42					

PHASE A: 42104 VA PHASE B: 42104 VA PHASE C: 42104 VA IMBALANCE FACTOR: NA

TOTAL CONNECTED LOAD: 9.4 KVA

REMOTE PILOT DEVICES

2 WIRE CONTROL

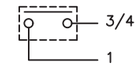

NOT FOR USE WITH AUTO RESET OL RELAYS.

3 WIRE CONTROL

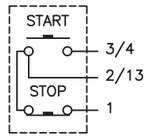

WHEN MORE THAN ONE PUSHBUTTON STATION IS USED, OMIT CONNECTOR "A" AND CONNECT PER SKETCH BELOW.

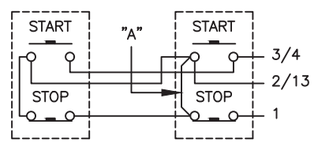

SEPARATE CONTROL

REMOVE WIRE "C" IF SUPPLIED AND CONNECT SEPARATE CONTROL LINES TO THE NO. 1 TERMINAL ON THE REMOTE PILOT DEVICE AND TO THE NO. 96 TERMINAL ON THE OVERLOAD RELAY.

CONNECTIONS FOR NON-REVERSING STARTER

FIG. 1

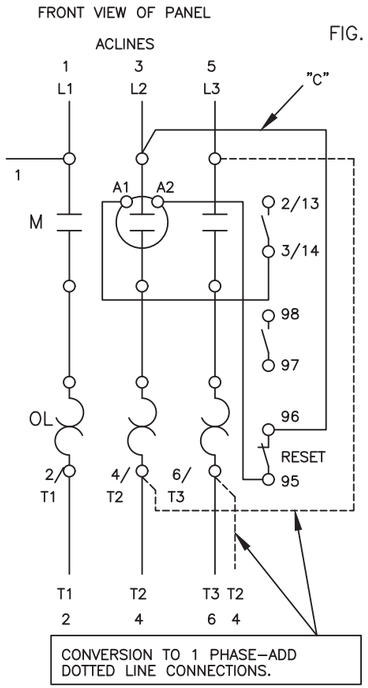

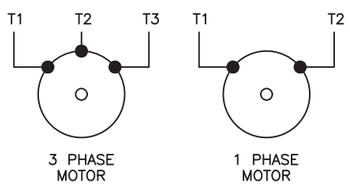

FOR INFORMATION ONLY

SMOKE EXHAUST DISTRIBUTION BOARD

PANEL: MME MAIN BUS: XXXX AMPS 480 VOLT, 3 PHASE, 4 WIRE

LOCATION: EL. 3188.50 MAIN: LUG 63,000 MIN. SYM AMPS INTERRUPTING CAPACITY

ENTRY: FEEDER: 4/0

MOUNTING: FLOOR NOTE:

CONDUIT NUMBER	WIRE SIZE	DIRECTORY	LOAD VA	BKR AMP			BKR AMP	LOAD VA	DIRECTORY	CONDUIT NUMBER	WIRE SIZE
		PHPF1A & PHPF1B (7.6A EACH)			1	2			MPF1A & MPF1B (7.6A EACH)		
	8			25	3	4	25				8
					5	6					
		PHPF5A & PHPF5B (7.5A EACH)			7	8			MPF2A & MPF2B (7.6A EACH)		
	8			25	9	10	25				8
					11	12					
		PHPF6A & PHPF6B (7.6A EACH)			13	14			MPF3A & MPF3B (7.6A EACH)		
	8			25	15	16	25				8
					17	18					
		PHPF8A & PHPF8B (7.6A EACH)			19	20			MPF4A & MPF4B (7.6A EACH)		
	8			25	21	22	25				8
					23	24					
		PHPF9A & PHPF9B (7.6A EACH)			25	26			MPF12A & MPF12B (7.6A EACH)		
	8			25	27	28	25				8
					29	30					
		SPARE			31	32			SPARE		
					33	34					
					35	36					
		SPARE			37	38			SPARE		
					39	40					
					41	42					

PHASE A: 42104 VA PHASE B: 42104 VA PHASE C: 42104 VA IMBALANCE FACTOR: NA

TOTAL CONNECTED LOAD: 9.4 KVA

REMOTE PILOT DEVICES

2 WIRE CONTROL

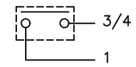

NOT FOR USE WITH AUTO RESET OL RELAYS.

3 WIRE CONTROL

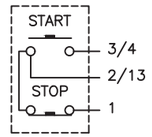

WHEN MORE THAN ONE PUSHBUTTON STATION IS USED, OMIT CONNECTOR "A" AND CONNECT PER SKETCH BELOW.

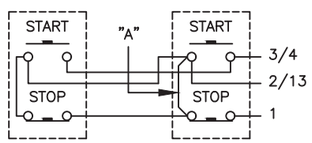

SEPARATE CONTROL

REMOVE WIRE "C" IF SUPPLIED AND CONNECT SEPARATE CONTROL LINES TO THE NO. 1 TERMINAL ON THE REMOTE PILOT DEVICE AND TO THE NO. 96 TERMINAL ON THE OVERLOAD RELAY.

CONNECTIONS FOR NON-REVERSING STARTER

FIG. 1

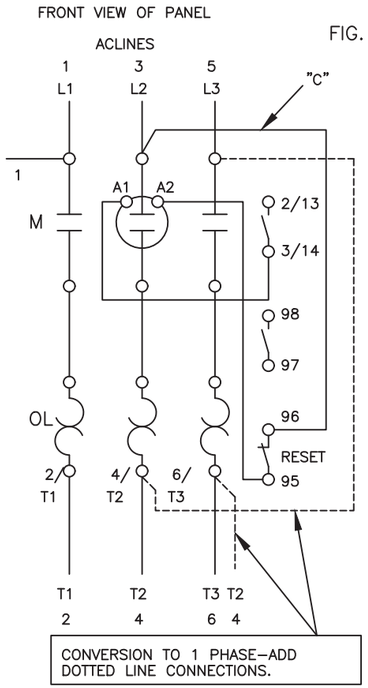

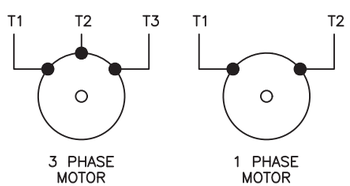

FOR INFORMATION ONLY

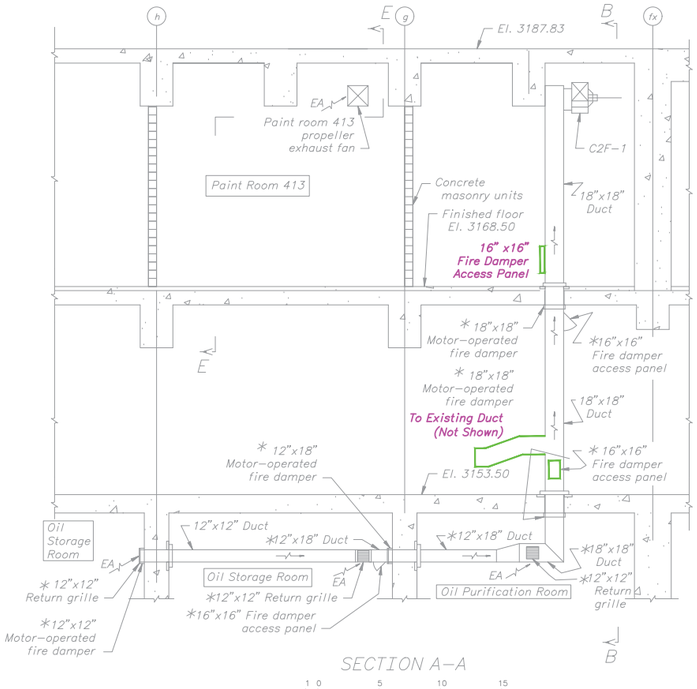

SECTION A–A

1 0 5 10 15
SCALE OF FEET

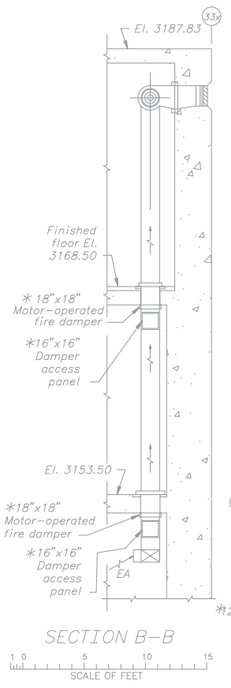

SECTION B–B

1 0 5 10 15
SCALE OF FEET

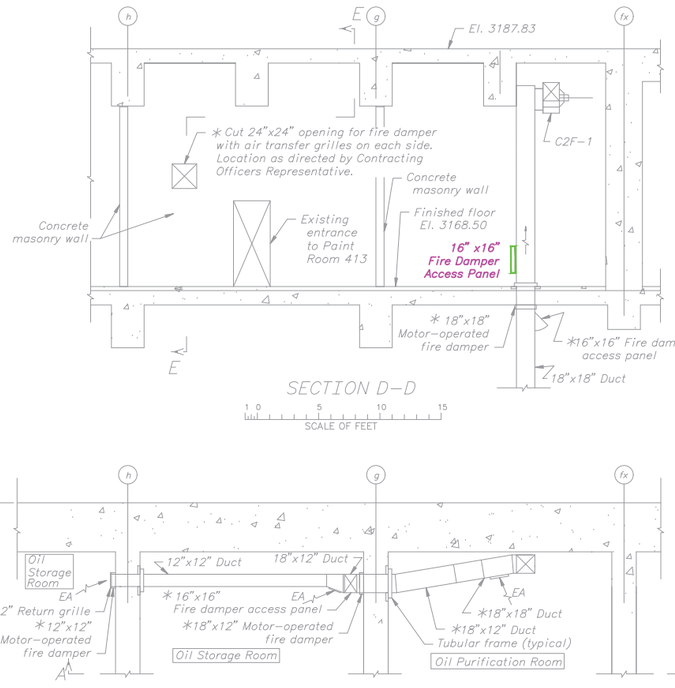

SECTION D–D

1 0 5 10 15
SCALE OF FEET

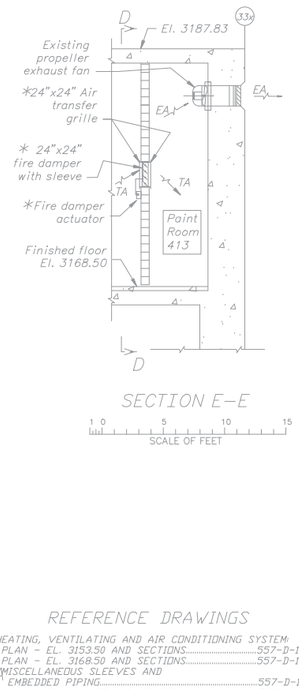

SECTION E–E

1 0 5 10 15
SCALE OF FEET

PART PLAN – El. 3150.00

1 0 5 10 15
SCALE OF FEET

REFERENCE DRAWINGS

HEATING, VENTILATING AND AIR CONDITIONING SYSTEM:
- PLAN – EL. 3153.50 AND SECTIONS 557-D-1937
- PLAN – EL. 3168.50 AND SECTIONS 557-D-1938

MISCELLANEOUS SLEEVES AND EMBEDDED PIPING 557-D-1939
- PLAN – EL. 3124.75 AND SECTIONS 557-D-1940
- PLANS–FLOOR EL. 3244.24– AND EL. 3279.12 ..... 557-D-1941
- MECHANICAL EQUIPMENT ROOM–FLOOR EL. 3244.24– PLANS AND SECTIONS 557-D-1942
- PLAN–EL. 3257.24 AND SECTIONS 557-D-1943

ARCHITECTURAL:
- CONTROL AREA EL. 3244.24 ..... 557-D-2526
- CONTROL AREA–PLAN EL. 3244.24 ..... 557-D-2525
- FLOOR PLAN – EL. 3257.25 ..... 557-D-2526

SUPERSTRUCTURE STRUCTURAL STEEL:
- CONTROL AREA GENERAL DESIGN 557-D-1489

LIGHTING INSTALLATION CONTROL AREA:
- EL. 3244.23 TO EL. 3257.25 ..... 557-D-954

PIPING LAYOUT:
- FIRE PROTECTION AND SERVICE WATER LINES 557-D-2499

HVAC SMOKE EXHAUST SYSTEM:
- CONTROL ROOM PART PLAN AND DETAIL – FLOOR EL. 3244.24 ..... 557-D-4099
- CONTROL ROOM SECTIONS – FLOOR EL. 3244.24 – GENERATOR GALLERY PART PLAN AND SECTION – EL. 3239.00 ..... 557-D-4100
- ELEVATOR MACHINERY ROOM PART PLAN AND SECTION – FLOOR EL. 3279.12 ..... 557-D-4101

GENERAL NOTES

1. Furnish and install the ducts as shown and in accordance with the SMACNA HVAC Duct Construction Standards, 2nd Edition, 1995.
2. Fabricate mitered duct elbows with a minimum of 4 segments for a 90 degree bend.
3. Fabricate radius elbow with centerline radius no less than 1 and 1/2 times the duct width or diameter.
4. Fabricate duct transition with side slopes where shown and no greater than 1 to 4.
5. Support all ducts sufficiently to prevent sagging and distortion.
6. Install turning vanes in all right angles and radius elbows in rectangular ducts, unless otherwise noted.
7. Install hangers so access to equipment is not obstructed.
8. Install dampers, access doors, and control equipment with adequate access for maintenance and/or replacement.
9. Locate ducts, dampers, fans, access panels, controls, and equipment in the approximate locations shown, and to avoid interference with pipes, lights, and other existing equipment, or relocate the new equipment or move the lights if approved by the Contracting Officers Representative. Install ductwork to avoid interference with access to equipment and as approved or directed by the Contracting Officers Representative.
10. Damper access panels must be readily accessible from removable ceiling panels or ceiling access panels shown on the drawings. The ceiling panels selected to provide access must not be obstructed by lights or existing equipment.
11. Furnish and install new ductwork, fans, dampers, access panels, controls, and all required accessories to provide a complete operating system.
12. Seal all wall openings and gaps in concrete walls with 2-hr. fire rated, UL or FM certified, firestopping systems, or match the wall rating if a higher rating is required. Seal all wall openings and gaps in fire rated gypboard walls to match with 1-hr. fire rated, UL or FM certified, firestopping systems, or match the wall rating if a higher rating is required.
13. Contractor shall modify the ductwork as necessary and shall furnish and install sleeves and minimum 1/4"–thick angle steel frames, or 2–hour rated enclosures, for each surface mounted damper.

SYMBOLS

- Thermostat
- * Asterisk indicates equipment to be furnished and installed by the Contractor.
- NECK SIZE-CFM — Ceiling supply register
- CFM — Ceiling return with manual damper
- SA supply air
- RA return air
- Acoustic lined duct
- Piping flow direction arrow
- Flexible connector
- LOS — LOS - Limit Of Supply

DESIGNATIONS

Note: Designations of new heating, ventilating, and air conditioning equipment requiring power are preceded by the letters "PH", "M", or "U and a number" prefix for Power House, Machine shop, or Unit Bay plus Bay number, respectively. Example designation: (See note 4, on drawing 557–D–4100.)

PHPF1A or MPF1A
- Identifies HVAC equipment location
- Identifies louver or item
- Identifies HVAC equipment below

AC - Air conditioning unit
CP - Centrifugal pump
T - Thermostat

AFF - Above finished floor
BOD - Bottom of duct
TOD - Top of duct

EA - Exhaust Air
MA - Mixed Air
OA - Outside Air
RA - Return Air
SA - Supply Air

SE - Smoke Exhaust
HE - Halon Exhaust

FD - Motor-operated fire damper
FSD - Combination fire and smoke rated damper with motor actutor
CD - Motor-operated control damper
DM - Motor-operator for existing operable louver

CF - Centrifugal fan
PF - Propeller Fan

COR - Contracting Officer's Representative

GLEN CANYON POWER PLANT
HVAC SMOKE EXHAUST SYSTEM

FOR INFORMATION ONLY

REVISIONS			
No.	Date	By	DESCRIPTION
0	3/2/05	SSC	AS-BUILT

AS-BUILT
3/2/05

HVAC AS-BUILT DOCUMENTATION
OF THE
FIRE DETECTION
AND ALARM SYSTEM
FOR
GLEN CANYON DAM
FIRE PROTECTION SYSTEM
Page, AZ 86040–1477
800 Bureau Street

FIRE PROTECTION & SUPPRESSION
DESIGN & ENGINEERING
Hiller Systems Inc
833 PRINCIPAL LANE
CHESAPEAKE, VIRGINIA 23320
TEL: (757)-549-9123
FAX: (757)-549-1083

DESIGNED BY: MSG	DRAWN BY: MSG
CHECKED BY: MEH	REVISION No.: 0
DATE: MAR 03, 2005	
DWG No.: VM4070–01	SCALE: NONE

SHEET NUMBER
1
OF 4 TOTAL SHEETS

DATE OF ORIGINAL ISSUE
MAR 3, 2005

JOB No.: 4070	JOB CODE: VM

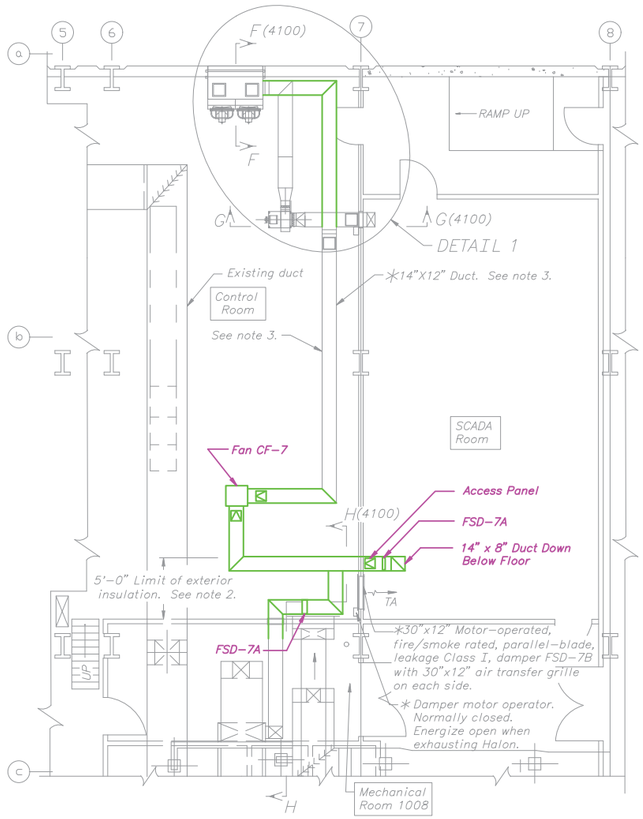

PART PLAN EL. 3244.24
CONTROL LEVEL SMOKE AND HALON EXHAUST SYSTEM

1 0 5 10 15
SCALE OF FEET

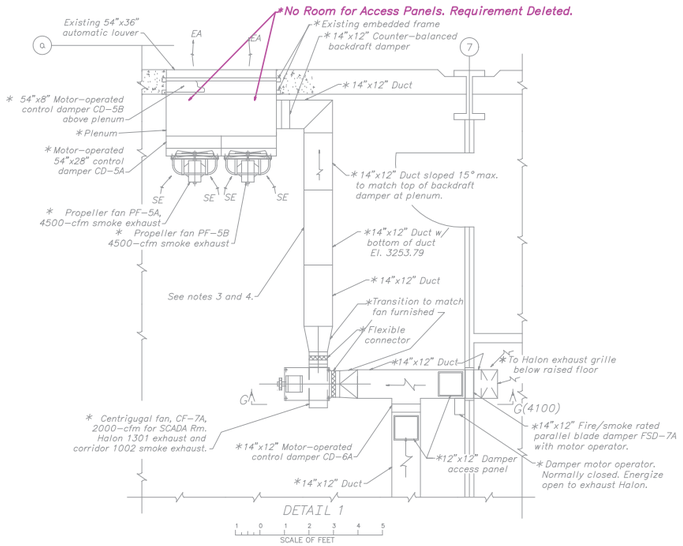

NOTES

1. For general notes, symbols, designations, and reference drawings, see drawing 557-D-4098.
2. All new smoke exhaust duct in the mechanical room 1301, and extending into the control room to the extent shown on the drawings, shall be externally insulated.
3. Adjust ductwork routing to avoid interference with existing AC unit, piping, and other equipment.
4. Ductwork in discharge side of fan shall comply with SMACNA Class A seal requirements.

SYMBOLS

* Asterisk indicates equipment to be furnished and installed by the Contractor.

SE Smoke exhaust
HE Halon exhaust

FOR INFORMATION ONLY

REVISIONS

No.	Date	By	DESCRIPTION
A	3/2/05	MSG	AS-BUILT

AS-BUILT
3/2/05

HVAC AS-BUILT DOCUMENTATION OF THE
FIRE DETECTION AND ALARM SYSTEM FOR
GLEN CANYON DAM FIRE PROTECTION SYSTEM
800 Bureau Street Page, AZ 86040-1477

Hiller Systems Inc
FIRE DETECTION & SUPPRESSION DESIGN & INSTALLATION
833 PRINCIPAL LANE
CHESAPEAKE, VIRGINIA 23320
TEL: (757)-549-9123
FAX: (757)-549-1083

DESIGNED BY: MSG	DRAWN BY: MSG
CHECKED BY: MDH	REVISION No.: 0
DATE: MAR 03, 2005	
DWG No.: VM4070-02	SCALE: NONE

SHEET NUMBER
2
OF 4 TOTAL SHEETS

DATE OF ORIGINAL ISSUE
MAR 3, 2005

JOB No.: 4070 JOB CODE: VM

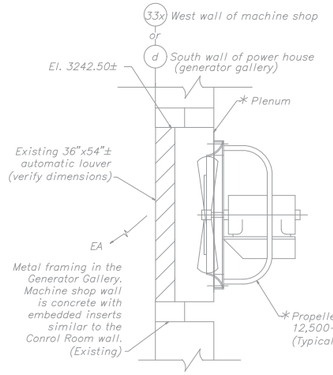

SECTION J-J

SCALE OF FEET

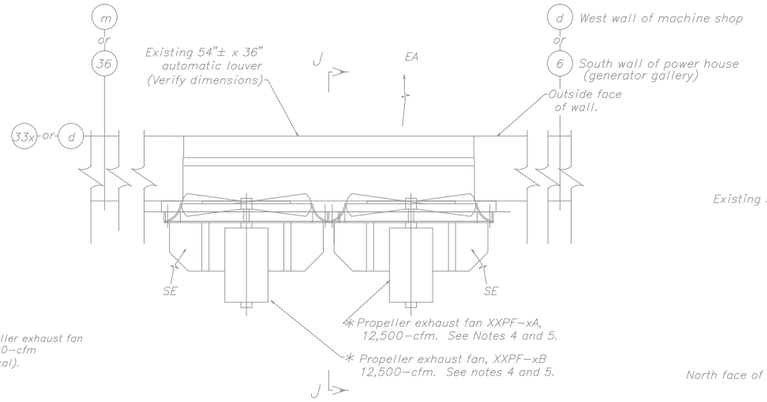

PART PLAN - ELEVATION 3239.00

POWER HOUSE GENERATOR GALLERY AND MACHINE SHOP
SMOKE EXHAUST SYSTEM FAN ASSEMBLIES
TYPICAL (See note 3)

SCALE OF FEET

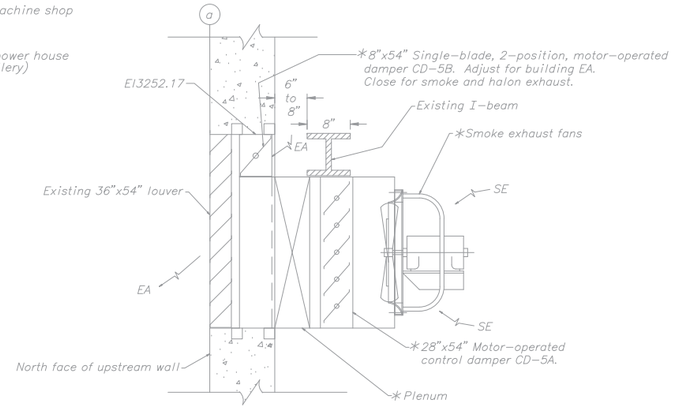

SECTION F-F (4099)

CONTROL ROOM SMOKE EXHAUST

SCALE OF FEET

NOTES

1. For general notes, symbols, designations, and reference drawings, see drawing (557-D-4098).

2. All new smoke exhaust duct in mechanical room 1301, and extending into the control room to the extent shown on the drawings, shall be externally insulated.

3. Contractor shall connect smoke exhaust duct to existing return air duct. At the connection, provide a transition to maintain the cross-section area of the smoke exhaust duct.

4. Replace the "XX" in the fan designation with the area designation and the "x" with the associated louver number.

Use the abbreviation "PF" for propeller fans. Add the prefix "PH" for propeller fans located in the powerhouse; or add the prefix "M" for propeller fans located in the Machine shop. Number the louvers at elevation 3239 in the South wall of the Power House Generator gallery 1 through 12 from West to East. Number the louvers in the West wall of the Machine shop 1 through 4 from North to South. Add the associated louver number as a suffix to the designation of each fan of the pair of fans installed at that louver. Follow this number with the letter A or B to indicate the right or left fan of each pair, respectively, when viewed from indoors.

5. Contractor shall furnish and install the following propeller fans which shall be designated as follows, in accordance with note 4 above:

PHPF1A and PHPF1B,	PHPF5A and PHPF5B,
PHPF6A and PHPF6B,	PHPF8A and PHPF8B,
PHPF9A and PHPF9B,	PHPF12A and PHPF12B,
MPF1A and MPF1B,	MPF2A and MPF2B,
MPF3A and MPF3B,	MPF4A and MPF4B.

Contractor shall connect smoke controls to the five pairs of existing fans which shall be designated as follows, in accordance with note 4 above:

PHPF3A and PHPF3B,	PHPF4A AND PHPF4B,
PHPF7A and PHPF7B,	PHPF10A and PHPF10B,
PHPF11A and PHPF11B.	

6. Contractor shall designate the eight existing propeller fans located behind the Governors, in the Governor Gallery, by their Unit Bay numbers, using the designations U1PF1 through U8PF1, numbered from West to East.

7. Cut openings through existing control room walls to suit duct and fire/smoke damper sleeves. Firestop gap between wall and duct or sleeve.

8. Contractor shall modify the ductwork as necessary and furnish and install sleeves at each fire smoke damper, minimum 1/4-inch thick angle steel frames or 2-hour rated enclosures for each surface mounted damper.

SYMBOLS

* Asterisk indicates equipment to be furnished and installed by the Contractor.

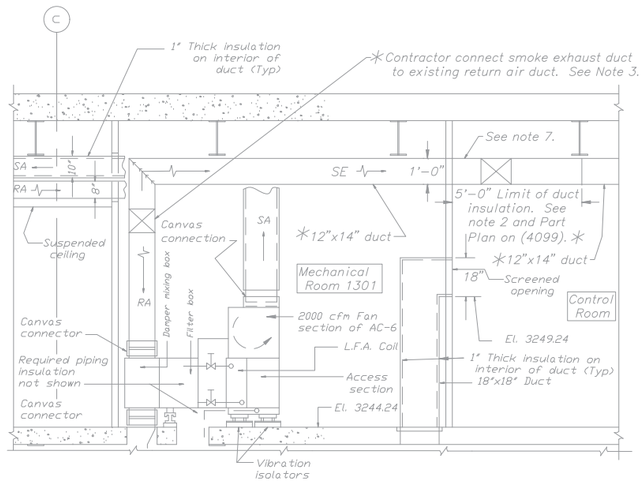

SECTION H-H (4099)

CONTROL LEVEL MECHANICAL ROOM SMOKE EXHAUST

SCALE OF FEET

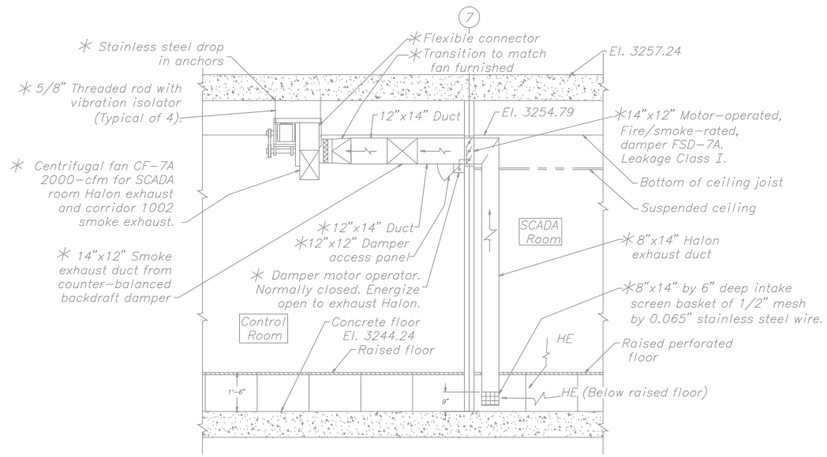

SECTION G-G (4099)

CONTROL LEVEL HALON EXHAUST

SCALE OF FEET

FOR INFORMATION ONLY

REVISIONS

No.	Date	By	DESCRIPTION
A	3/2/05	MSG	AS-BUILT

AS-BUILT
3/2/05

HVAC AS-BUILT DOCUMENTATION OF THE
FIRE DETECTION AND ALARM SYSTEM
FOR
GLEN CANYON DAM FIRE PROTECTION SYSTEM
800 Bureau Street Page, AZ 86040-1477

Hiller Systems Inc
FIRE DETECTION & SUPPRESSION DESIGNERS & INSTALLERS
833 PRINCIPAL LANE
CHESAPEAKE, VIRGINIA 23320
TEL: (757)-549-9123
FAX: (757)-549-1083

DESIGNED BY: MSG	DRAWN BY: MSG
CHECKED BY: MEH	REVISION No. 0
DATE: MAR 03, 2005	
DWG No. VM4070-03	SCALE: NONE

SHEET NUMBER
3
OF 4 TOTAL SHEETS
DATE OF ORIGINAL ISSUE
MAR 3, 2005

JOB No. 4070 | JOB CODE: VM

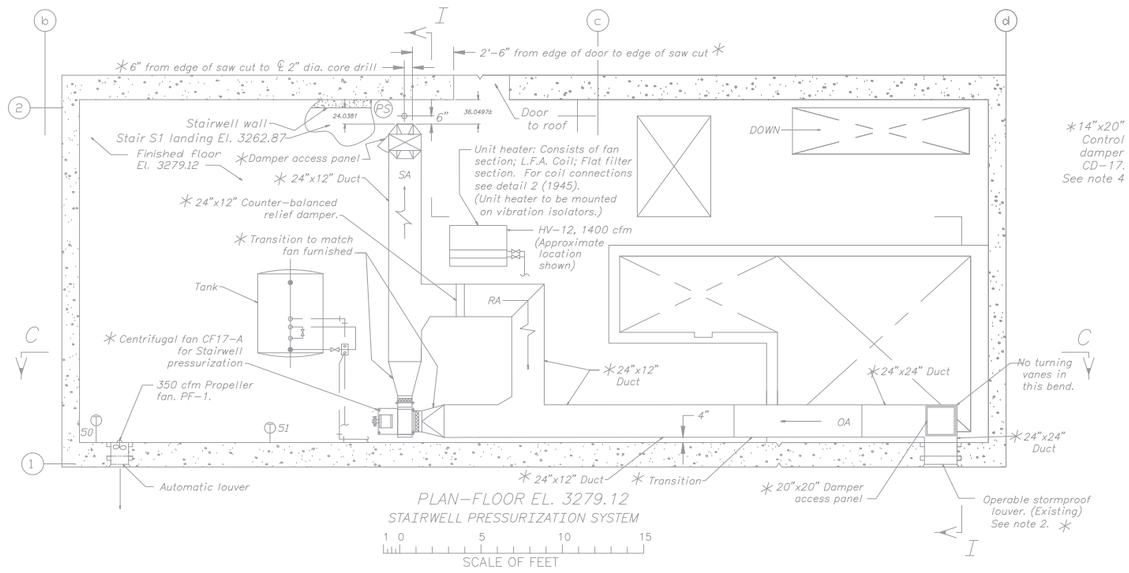

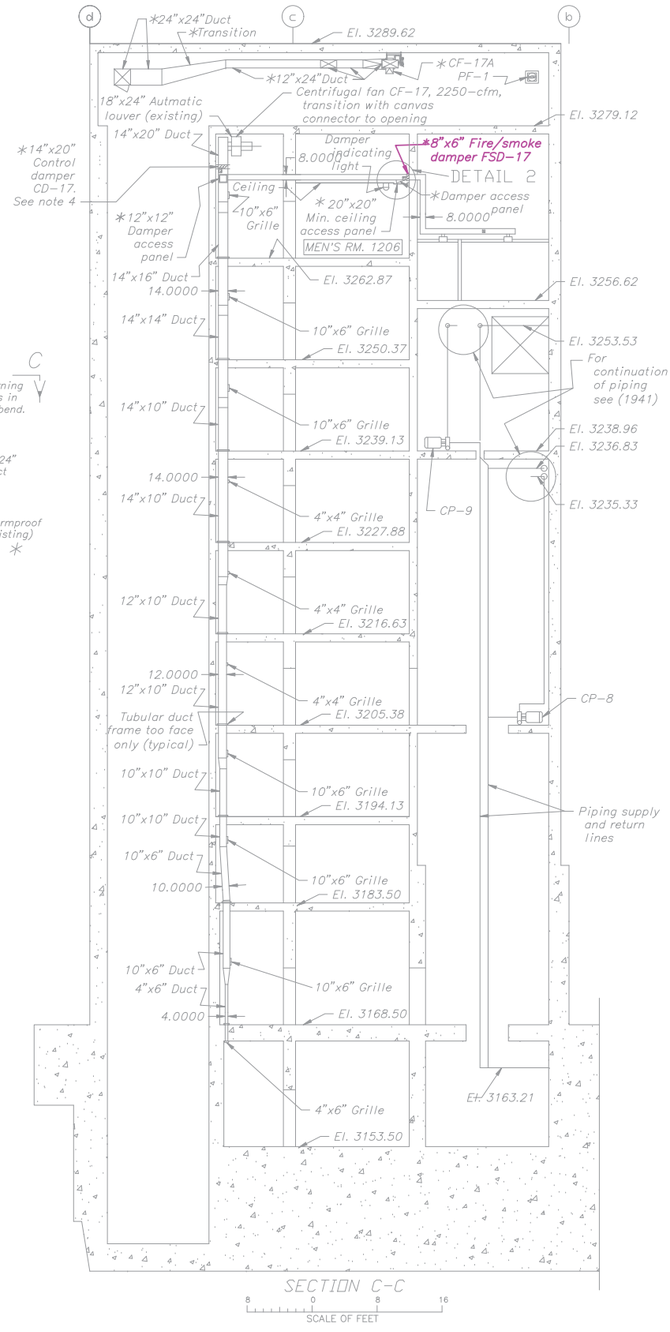

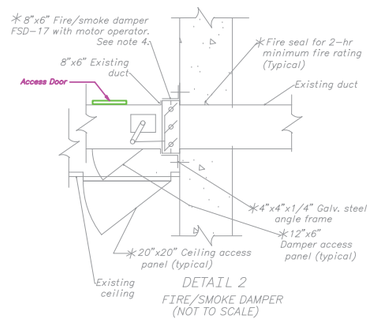

NOTES

1. For general notes, symbols, designations, and reference drawings, see drawing (557-D-4098).

2. Provide an electric-motor-operator, designated DM-17B, to fully open the existing operable louver when the stairwell pressurization fan is energized. Remove the existing fan mounted on this louver opening, and store in a location to be selected by the Contracting Officers Representative.

3. Differential pressure controller shall be wall mounted and shall include differential pressure sensor/transmitter, power supply, digital display, and pressure control modules. See the specifications paragraphs.

4. Provide motor-operated, smoke-rated, control damper, designated CD-17, on the intake duct to fan CF-17, and a 1-1/2-hour rated, combination fire/smoke damper, designated FSD-17, above the ceiling of Men's Toilet Room 1202 as shown in Detail 2. These dampers must open during normal operation, close during stairwell pressurization, and automatically reset to open for normal operation or smoke purge modes.

5. Contractor shall modify the ductwork as necessary and shall furnish and install sleeves and minimum 1/4-inch thick angle steel frames, or 2-hour rated enclosures, for each surface mounted damper.

6. Contractor shall core drill a 2" diameter hole for the air line from the stairwell pressure inlet to the differential pressure controller, for damper motor DM-17A, and shall firestop around the air line. See the specifications paragraphs.

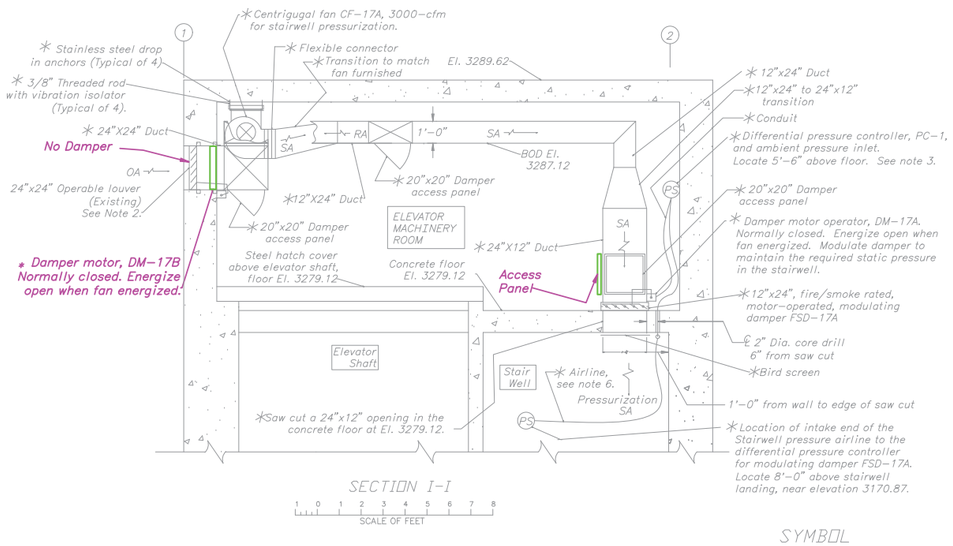

SYMBOL

✳ Asterisk indicates equipment to be furnished and installed by the Contractor.

FOR INFORMATION ONLY

REVISIONS

No	Date	By	DESCRIPTION
0	3/2/05	MSG	AS-BUILT

AS-BUILT
3/2/05

HVAC AS-BUILT DOCUMENTATION OF THE
FIRE DETECTION AND ALARM SYSTEM
FOR
GLEN CANYON DAM
FIRE PROTECTION SYSTEM
800 Bureau Street Page, AZ 86040-1477

Hiller Systems Inc
FIRE DETECTION & SUPPRESSION DESIGN CONSULTANTS
833 PRINCIPAL LANE
CHESAPEAKE, VIRGINIA 23320
TEL: (757)-549-9123
FAX: (757)-549-1083

DESIGNED BY: MSG	DRAWN BY: MSG
CHECKED BY: MEH	REVISION No. 0
DATE: MAR. 03, 2005	
DWG No. YM4070-04	SCALE: NONE

SHEET NUMBER
4
OF 4 TOTAL SHEETS

DATE OF ORIGINAL ISSUE
MAR 3, 2005

JOB No. 4070 | JOB CODE: YM

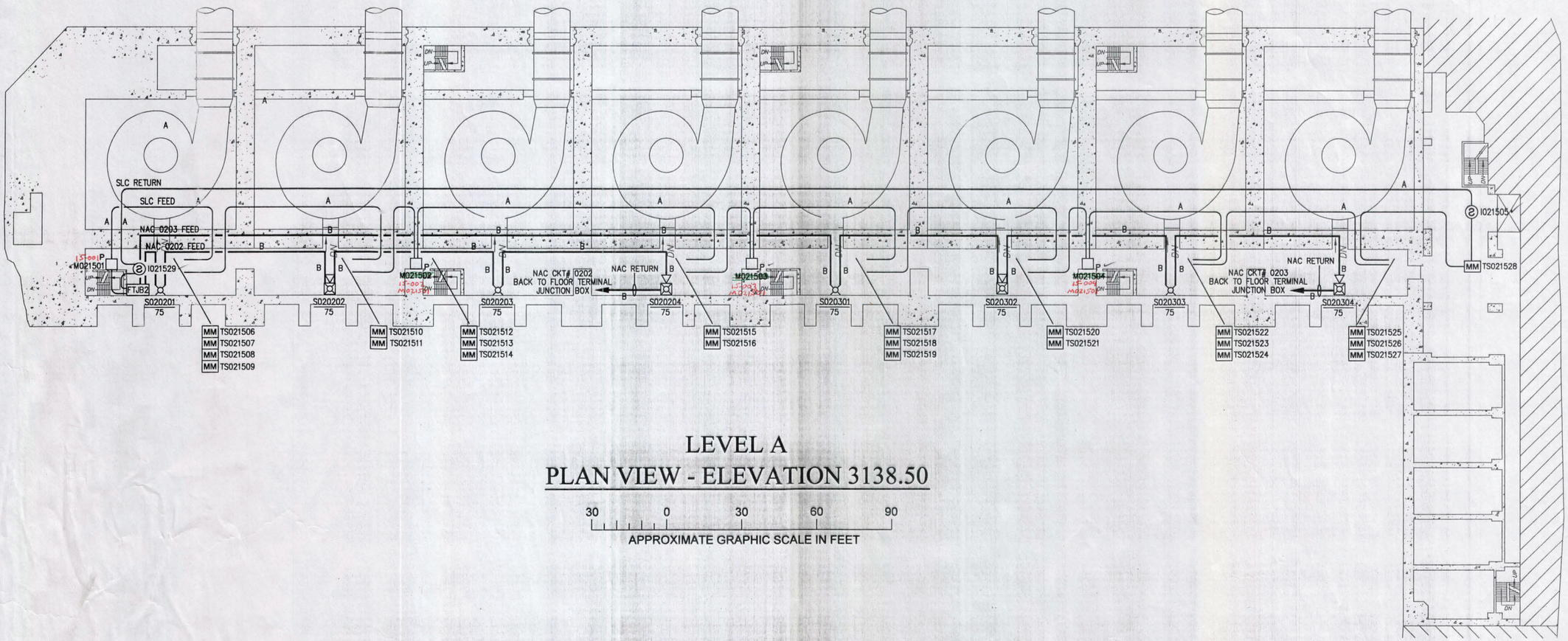

LEVEL A
PLAN VIEW - ELEVATION 3138.50

30 0 30 60 90

APPROXIMATE GRAPHIC SCALE IN FEET

DEVICE NAMING LEGEND

M0101 01

- DEVICE NUMBER
- CKT NUMBER
- FLOOR NUMBER
- DEVICE TYPE:
  - M = MANUAL STATION
  - B = PROJECTED BEAM DETECTOR
  - I = IONIZATION TYPE SMOKE DETECTOR
  - T = THERMAL TYPE DETECTOR
  - DC = DAMPER CONTROL RELAY MODULE
  - F = FLAME TYPE DETECTOR
  - LT = LINEAR TYPE THERMAL DETECTOR
  - IM = ADDRESSABLE INPUT MODULE
  - CR = CONTROL RELAY MODULE
  - S = NOTIFICATION APPLIANCE – STROBE
  - HS = NOTIFICATION APPLIANCE – HORN/STROBE

WIRING LEGEND

- A – 2 COND, 18 AWG, TWISTED/SHIELDED, PLENUM SIGNALING LINE CIRCUIT (SLC) WIRING
- B – 2 COND, 14 AWG, SOLID, PLENUM NOTIFICATION APPLIANCE CIRCUIT (NAC) WIRING
- C – 3 COND, 12 AWG, SOLID 120VAC, DOOR HOLDER WIRING
- D – 2 COND, 14 AWG, SOLID, PLENUM 24VDC POWER TO CZM MODULE

ELEVATION 3138.50
NOTIFICATION CKT LOADING TABLE

FLOOR & CIRCUIT NUMBER	ORIGINATES	AREA SERVED	USED (AMPS)	AVAIL (AMPS)	USED % (AMPS)
0202	FTJB# 2	EL. 3138.50	0.464	3.0	15.5%
0203	FTJB# 2	EL. 3138.50	0.464	3.0	15.5%
0204	FTJB# 2	SPARE	0.000	3.0	0.00%
0205	FTJB# 2	SPARE	0.000	3.0	0.00%

NOTIFICATION CIRCUIT
MAXIMUM WIRE DISTANCE

$$R_1 = \frac{V_1 - V_2}{A} \qquad D = \frac{R_1}{R_2}$$

WHERE:
- D = MAXIMUM CIRCUIT DISTANCE
- A = TOTAL CURRENT DRAW
- V_1 = OUTPUT FROM FACP
- V_2 = MAX VOLTAGE DROP (10%)
- R_1 = MAX ALLOWABLE RESISTANCE
- R_2 = WIRE RESISTANCE (14AWG WIRE)

$$R_1 = \frac{24.0\ VDC - 21.6\ VDC}{0.464\ AMPS} \qquad D = \frac{5.1724}{.00314}$$

$$R_1 = 5.1724 \qquad D = 1647\ FT$$

MAXIMUM NAC CIRCUIT LENGTH

REFERENCE DRAWINGS

1. Hiller Systems Inc. Dwg. No. VM4070-6 Sht. 6 of 31.....557-420-M2632
2. General notes and operational notes.....557-420-2280
3. Equipment list and nac load chart.....557-420-2281
4. Sequence of operations matrix.....557-420-2282
5. Linear thermal detector wiring.....557-420-2283
6. Typical initiating device wiring.....557-420-2284
7. Typical initiating device mounting.....557-420-2285
8. Notif. device wiring & mounting.....557-420-2286
9. Aux. pwr supply for fan shutdown.....557-420-2287

REV.	DATE	BY	APP.	DESCRIPTION
03	11/16/12 420-			REVISED HORN AND STROBE LIGHT LOCATIONS.
02	7/10/05 420-J.M.	R.W.		POWER PLANT FIRE PROTECTION AS-BUILT PER HILLER SYSTEMS DWG. VM4070-6
01	5/18/04 420-C.S.	C.S.		DENVER DRAWING SUBMITTED FOR POWER PLANT FIRE PROTECTION CONTRACT.

ALWAYS THINK SAFETY

UNITED STATES
DEPARTMENT OF THE INTERIOR
BUREAU OF RECLAMATION
COLORADO RIVER STORAGE PROJECT
MIDDLE RIVER DIV, GLEN CANYON UNIT – ARIZONA-UTAH

GLEN CANYON POWER PLANT
ELECTRICAL INSTALLATION
FIRE DETECTION AND ALARM SYSTEMS
NOTIFICATION AND FIRE SAFETY CONTROL DEVICES
EL. 3124.75 LOCATION PLAN

DESIGNED JOSEPH J. MONTESANO TECHNICAL APPROVAL JOSEPH J. MONTESANO
DRAWN J.J.M.
CHECKED LOUIS H. MATELLA APPROVED V.B. NOKES JR.
ELECTRICAL SYSTEMS GROUP
DENVER, COLORADO FEBRUARY 23, 1999 557-D-3971

GLEN CANYON COMPUTER DRAFTING

DATE AND TIME PLOTTED
PLDATE
PLOTTED BY
USER

CAD SYSTEM
CADSTS
CAD FILENAME
PLNAM

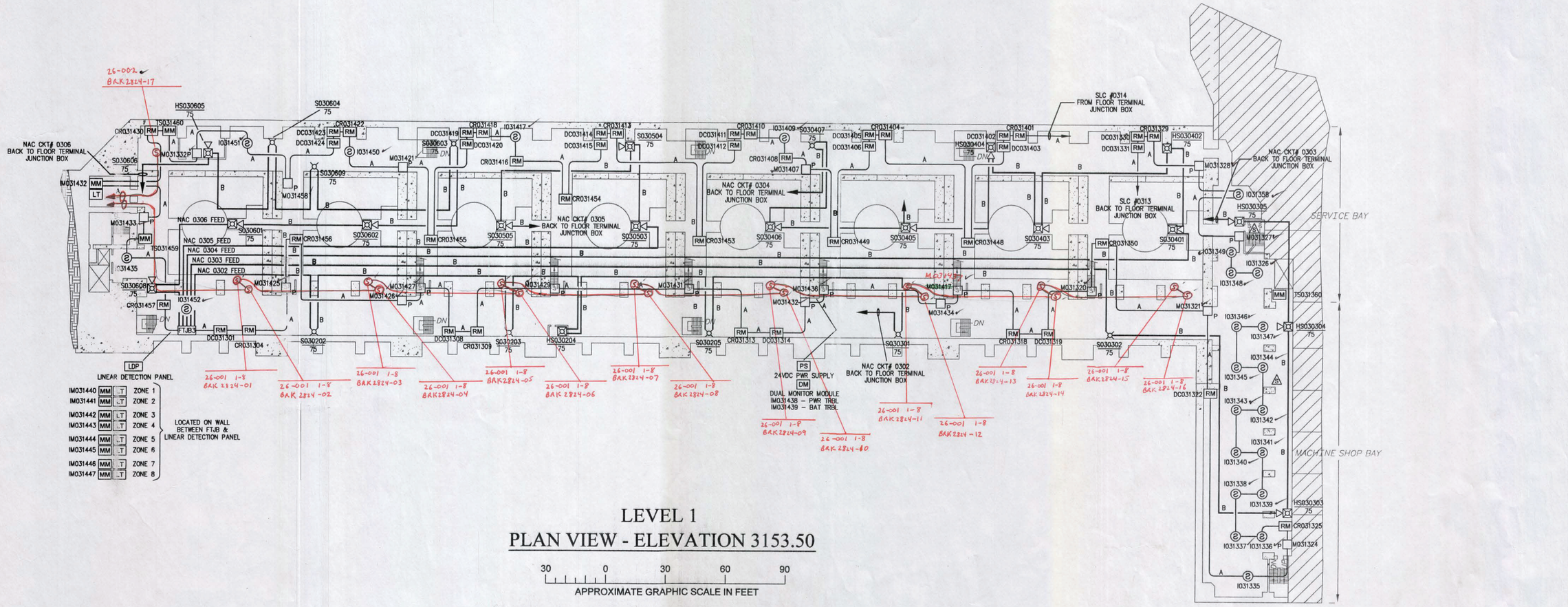

LEVEL 1
PLAN VIEW - ELEVATION 3153.50

30 0 30 60 90

APPROXIMATE GRAPHIC SCALE IN FEET

DEVICE NAMING LEGEND

M010101

- DEVICE NUMBER
- CKT NUMBER
- FLOOR NUMBER
- DEVICE TYPE:
  - M = MANUAL STATION
  - B = PROJECTED BEAM DETECTOR
  - I = IONIZATION TYPE SMOKE DETECTOR
  - T = THERMAL TYPE DETECTOR
  - DC = DAMPER CONTROL RELAY MODULE
  - F = FLAME TYPE DETECTOR
  - LT = LINEAR TYPE THERMAL DETECTOR
  - IM = ADDRESSABLE INPUT MODULE
  - CR = CONTROL RELAY MODULE
  - S = NOTIFICATION APPLIANCE – STROBE
  - HS = NOTIFICATION APPLIANCE – HORN/STROBE

WIRING LEGEND

- A – 2 COND, 18 AWG, TWSTED/SHIELDED, PLENUM SIGNALING LINE CIRCUIT (SLC) WIRING
- B – 2 COND, 14 AWG, SOLID, PLENUM NOTIFICATION APPLIANCE CIRCUIT (NAC) WIRING
- C – 3 COND, 12 AWG, SOLID 120VAC, DOOR HOLDER WIRING
- D – 2 COND, 14 AWG, SOLID, PLENUM 24VDC POWER TO CZM MODULE

ELEVATION 3153.50
NOTIFICATION CKT LOADING TABLE

FLOOR & CIRCUIT NUMBER	ORIGINATES	AREA SERVED	USED (AMPS)	AVAIL (AMPS)	USED % (AMPS)
0302	FTJB# 3	EL. 3153.50	0.597	3.0	19.9%
0303	FTJB# 3	EL. 3153.50	0.631	3.0	21.1%
0304	FTJB# 3	EL. 3153.50	0.614	3.0	20.5%
0305	FTJB# 3	EL. 3153.50	0.580	3.0	19.3%
0306	FTJB# 3	EL. 3153.50	0.580	3.0	19.3%
0307	FTJB# 3	SPARE	0.000	3.0	0.00%

NOTIFICATION CIRCUIT MAXIMUM WIRE DISTANCE

$R_1 = \frac{V_1 - V_2}{A}$

$D = \frac{R_1}{R_2}$

WHERE:
- D = MAXIMUM CIRCUIT DISTANCE
- A = TOTAL CURRENT DRAW
- V_1 = OUTPUT FROM FACP
- V_2 = MAX VOLTAGE DROP (10%)
- R_1 = MAX ALLOWABLE RESISTANCE
- R_2 = WIRE RESISTANCE (14AWG WIRE)

$R_1 = \frac{24.0\ VDC - 21.6\ VDC}{0.631\ AMPS}$

$R_1 = 3.8034$

$D = \frac{3.8034}{.00314}$

D = 1211 FT

MAXIMUM NAC CIRCUIT LENGTH

REFERENCE DRAWINGS

1. Hiller Systems Inc. Dwg. No. VM4070-7 Sht. 7 of 31.....557-420-M2633
2. General notes and operational notes.....557-420-2280
3. Equipment list and nac load chart.....557-420-2281
4. Sequence of operations matrix.....557-420-2282
5. Linear thermal detector wiring.....557-420-2283
6. Typical initiating device wiring.....557-420-2284
7. Typical initiating device mounting.....557-420-2285
8. Notif. device wiring & mounting.....557-420-2286
9. Aux. pwr supply for fan shutdown.....557-420-2287

REV.	DATE	BY	APP.	DESCRIPTION
03	11/15/12 420–			REVISED HORN AND STROBE LIGHT LOCATIONS.
02	7/10/05 420–J.M.	R.W.		POWER PLANT FIRE PROTECTION AS–BUILT PER HILLER SYSTEMS DWG. VM4070–7
01	5/18/04 420–C.S.	C.S.		DENVER DRAWING SUBMITTED FOR POWER PLANT FIRE PROTECTION CONTRACT

ALWAYS THINK SAFETY

UNITED STATES
DEPARTMENT OF THE INTERIOR
BUREAU OF RECLAMATION
COLORADO RIVER STORAGE PROJECT
MIDDLE RIVER DIV. GLEN CANYON UNIT – ARIZONA–UTAH
GLEN CANYON POWER PLANT
ELECTRICAL INSTALLATION
FIRE DETECTION AND ALARM SYSTEMS
NOTIFICATION AND FIRE SAFETY CONTROL DEVICES
EL. 3153.5 LOCATION PLAN

DESIGNED JOSEPH J. MONTESANO TECHNICAL APPROVAL JOSEPH J. MONTESANO
DRAWN J.J.M.
CHECKED LOUIS H. MARTELLA APPROVED V.B. NOKES JR.
ELECTRICAL SYSTEMS GROUP
DENVER, COLORADO FEBRUARY 23, 1999 557-D-3972

GLEN CANYON COMPUTER DRAFTING

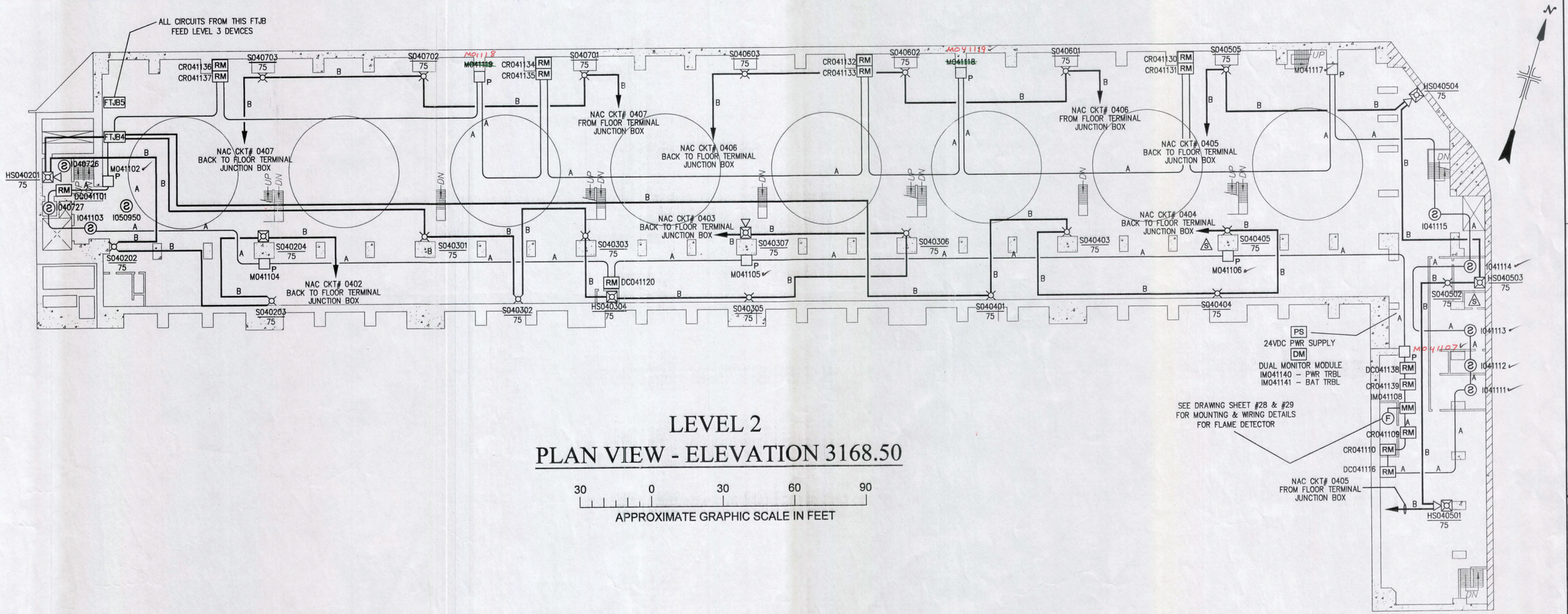

LEVEL 2
PLAN VIEW - ELEVATION 3168.50

30 0 30 60 90

APPROXIMATE GRAPHIC SCALE IN FEET

DEVICE NAMING LEGEND

M010101

- DEVICE NUMBER
- CKT NUMBER
- FLOOR NUMBER
- DEVICE TYPE:
  - M = MANUAL STATION
  - B = PROJECTED BEAM DETECTOR
  - I = IONIZATION TYPE SMOKE DETECTOR
  - T = THERMAL TYPE DETECTOR
  - DC = DAMPER CONTROL RELAY MODULE
  - F = FLAME TYPE DETECTOR
  - LT = LINEAR TYPE THERMAL DETECTOR
  - IM = ADDRESSABLE INPUT MODULE
  - CR = CONTROL RELAY MODULE
  - S = NOTIFICATION APPLIANCE – STROBE
  - HS = NOTIFICATION APPLIANCE – HORN/STROBE

WIRING LEGEND

- A – 2 COND, 18 AWG, TWISTED/SHIELDED, PLENUM SIGNALING LINE CIRCUIT (SLC) WIRING
- B – 2 COND, 14 AWG, SOLID, PLENUM NOTIFICATION APPLIANCE CIRCUIT (NAC) WIRING
- C – 3 COND, 12 AWG, SOLID 120VAC, DOOR HOLDER WIRING
- D – 2 COND, 14 AWG, SOLID, PLENUM 24VDC POWER TO CZM MODULE

ELEVATION 3168.50
NOTIFICATION CKT LOADING TABLE

FLOOR & CIRCUIT NUMBER	ORIGINATES	AREA SERVED	USED (AMPS)	AVAIL (AMPS)	USED % (AMPS)
0402	FTJB# 4	EL. 3168.50	0.597	3.0	19.9%
0403	FTJB# 4	EL. 3168.50	0.597	3.0	19.9%
0404	FTJB# 4	EL. 3168.50	0.580	3.0	19.3%
0405	FTJB# 4	EL. 3168.50	0.631	3.0	21.1%
0406	FTJB# 4	EL. 3168.50	0.339	3.0	11.3%
0407	FTJB# 4	EL. 3168.50	0.339	3.0	11.3%

NOTIFICATION CIRCUIT MAXIMUM WIRE DISTANCE

$R_1 = \frac{V_1 - V_2}{A}$

$D = \frac{R_1}{R_2}$

WHERE:
- D = MAXIMUM CIRCUIT DISTANCE
- A = TOTAL CURRENT DRAW
- V_1 = OUTPUT FROM FACP
- V_2 = MAX VOLTAGE DROP (10%)
- R_1 = MAX ALLOWABLE RESISTANCE
- R_2 = WIRE RESISTANCE (14AWG WIRE)

$R_1 = \frac{24.0 \text{ VDC} - 21.6 \text{ VDC}}{0.631 \text{ AMPS}}$

$R_1 = 3.8034$

$D = \frac{3.8034}{.00314}$

D = 1211 FT

MAXIMUM NAC CIRCUIT LENGTH

REFERENCE DRAWINGS

1. Hiller Systems Inc. Dwg. No. VM4070-8 Sht. 8 of 31.....557-420-M2631
2. General notes and operational notes.....557-420-2280
3. Equipment list and nac load chart.....557-420-2281
4. Sequence of operations matrix.....557-420-2282
5. Linear thermal detector wiring.....557-420-2283
6. Typical initiating device wiring.....557-420-2284
7. Typical initiating device mounting.....557-420-2285
8. Notif. device wiring & mounting.....557-420-2286
9. Aux. pwr supply for fan shutdown.....557-420-2287

REV.	DATE	BY	APP.	DESCRIPTION
03	11/15/12 420–			REVISED HORN AND STROBE LIGHT LOCATIONS.
02	7/10/05 420–J.M.	R.W.		POWER PLANT FIRE PROTECTION AS–BUILT PER HILLER SYSTEMS DWG. VM4070–8
01	05/18/04 420–C.S.	C.S.		DENVER DRAWING SUBMITTED FOR POWER PLANT FIRE PROTECTION CONTRACT

UNITED STATES
DEPARTMENT OF THE INTERIOR
BUREAU OF RECLAMATION
COLORADO RIVER STORAGE PROJECT
MIDDLE RIVER DIV.–GLEN CANYON UNIT–ARIZONA–UTAH

GLEN CANYON POWER PLANT
ELECTRICAL INSTALLATION
FIRE DETECTION AND ALARM SYSTEMS
NOTIFICATION AND FIRE SAFETY CONTROL DEVICES
EL. 3168.50 LOCATION PLAN

DESIGNED JOSEPH J. MONTESANO
DRAWN J.J.M.
CHECKED LOUIS H. MATELLA
TECHNICAL APPROVAL JOSEPH J. MONTESANO
APPROVED V.B. NOKES JR.
ELECTRICAL PLANTS GROUP

Cadd System:	Filename:	Date and Time Plotted:
AutoCAD Release 12 c2	P:\...\GCPPFIRE\557D3973	JUNE 05, 1997 12:08
DENVER, COLORADO	FEBRUARY 23, 1999	557-D-3973

LMARTELL

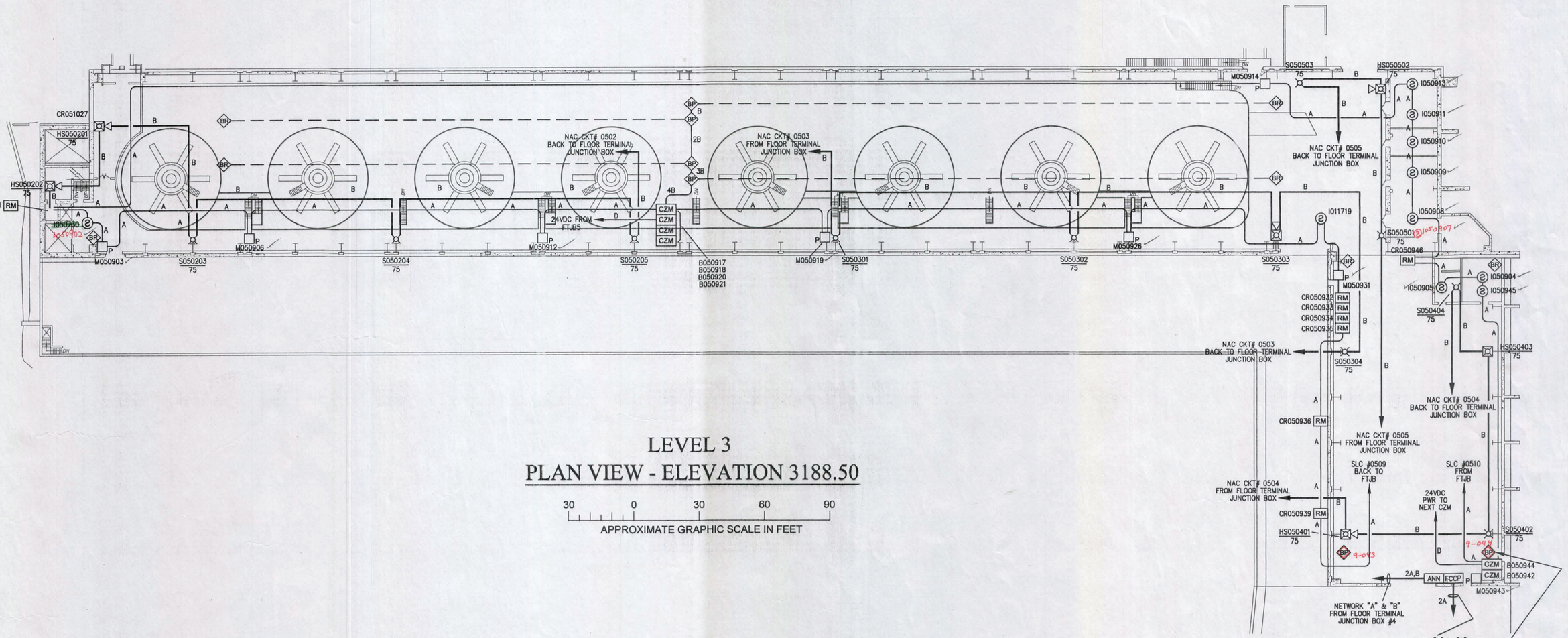

LEVEL 3
PLAN VIEW - ELEVATION 3188.50

30 0 30 60 90

APPROXIMATE GRAPHIC SCALE IN FEET

DEVICE NAMING LEGEND

M0101O1

- DEVICE NUMBER
- CKT NUMBER
- FLOOR NUMBER
- DEVICE TYPE:
  - M = MANUAL STATION
  - B = PROJECTED BEAM DETECTOR
  - I = IONIZATION TYPE SMOKE DETECTOR
  - T = THERMAL TYPE DETECTOR
  - DC = DAMPER CONTROL RELAY MODULE
  - F = FLAME TYPE DETECTOR
  - LT = LINEAR TYPE THERMAL DETECTOR
  - IM = ADDRESSABLE INPUT MODULE
  - CR = CONTROL RELAY MODULE
  - S = NOTIFICATION APPLIANCE – STROBE
  - HS = NOTIFICATION APPLIANCE – HORN/STROBE

WIRING LEGEND

- A – 2 COND, 18 AWG, TWISTED/SHIELDED, PLENUM SIGNALING LINE CIRCUIT (SLC) WIRING
- B – 2 COND, 14 AWG, SOLID, PLENUM NOTIFICATION APPLIANCE CIRCUIT (NAC) WIRING
- C – 3 COND, 12 AWG, SOLID 120VAC, DOOR HOLDER WIRING
- D – 2 COND, 14 AWG, SOLID, PLENUM 24VDC POWER TO CZM MODULE

ELEVATION 3188.50
NOTIFICATION CKT LOADING TABLE

FLOOR & CIRCUIT NUMBER	ORIGINATES	AREA SERVED	USED (AMPS)	AVAIL (AMPS)	USED % (AMPS)
0502	FTJB# 5	EL. 3188.50	0.614	3.0	20.5%
0503	FTJB# 5	EL. 3188.50	0.464	3.0	15.5%
0504	FTJB# 5	EL. 3188.50	0.498	3.0	16.6%
0505	FTJB# 5	EL. 3188.50	0.365	3.0	12.2%
0506	FTJB# 5	SPARE	0.000	3.0	0.00%
0507	FTJB# 5	SPARE	0.000	3.0	0.00%

NOTIFICATION CIRCUIT
MAXIMUM WIRE DISTANCE

$R_1 = \frac{V_1 - V_2}{A}$

$D = \frac{R_1}{R_2}$

WHERE:
- D = MAXIMUM CIRCUIT DISTANCE
- A = TOTAL CURRENT DRAW
- V_1 = OUTPUT FROM FACP
- V_2 = MAX VOLTAGE DROP (10%)
- R_1 = MAX ALLOWABLE RESISTANCE
- R_2 = WIRE RESISTANCE (14AWG WIRE)

$R_1 = \frac{24.0\ VDC - 21.6\ VDC}{0.614\ AMPS}$

$R_1 = 3.9087$

$D = \frac{3.9087}{.00314}$

$D = 1244\ FT$

MAXIMUM NAC CIRCUIT LENGTH

REFERENCE DRAWINGS

1. Hiller Systems Inc. Dwg. No. VM4070-9 Sht. 9 of 31.....557-420-M2635
2. General notes and operational notes.....557-420-2280
3. Equipment list and nac load chart.....557-420-2281
4. Sequence of operations matrix.....557-420-2282
5. Linear thermal detector wiring.....557-420-2283
6. Typical initiating device wiring.....557-420-2284
7. Typical initiating device mounting.....557-420-2285
8. Notif. device wiring & mounting.....557-420-2286
9. Aux. pwr supply for fan shutdown.....557-420-2287

REV.	DATE	BY	APP.	DESCRIPTION
03	11/16/12 420-			REVISED HORN AND STROBE LIGHT LOCATIONS.
02	7/10/05 420-JM	R.W.		POWER PLANT FIRE PROTECTION AS-BUILT PER HILLER SYSTEMS DWG. VM4070-9
01	5/18/04 420-C.S.	C.S.		DENVER DRAWING SUBMITTED FOR POWER PLANT FIRE PROTECTION CONTRACT

ALWAYS THINK **SAFETY**

UNITED STATES
DEPARTMENT OF THE INTERIOR
BUREAU OF RECLAMATION
COLORADO RIVER STORAGE PROJECT
MIDDLE RIVER DIV. GLEN CANYON UNIT – ARIZONA-UTAH

GLEN CANYON POWER PLANT
ELECTRICAL INSTALLATION
FIRE DETECTION AND ALARM SYSTEMS
NOTIFICATION AND FIRE SAFETY CONTROL DEVICES
EL. 3188.50 LOCATION PLAN

DESIGNED JOSEPH J. MONTESANO TECHNICAL APPROVAL JOSEPH J. MONTESANO
DRAWN J.J.M.
CHECKED LOUIS H. MARTELLA APPROVED V.B. NOKES JR.
ELECTRICAL SYSTEMS GROUP
DENVER, COLORADO FEBRUARY 23, 1999 557-D-3974

CAD SYSTEM C400S7
CAD FILENAME FLNUM
DATE AND TIME PLOTTED PLDATE
PLOTTED BY USER

GLEN CANYON COMPUTER DRAFTING

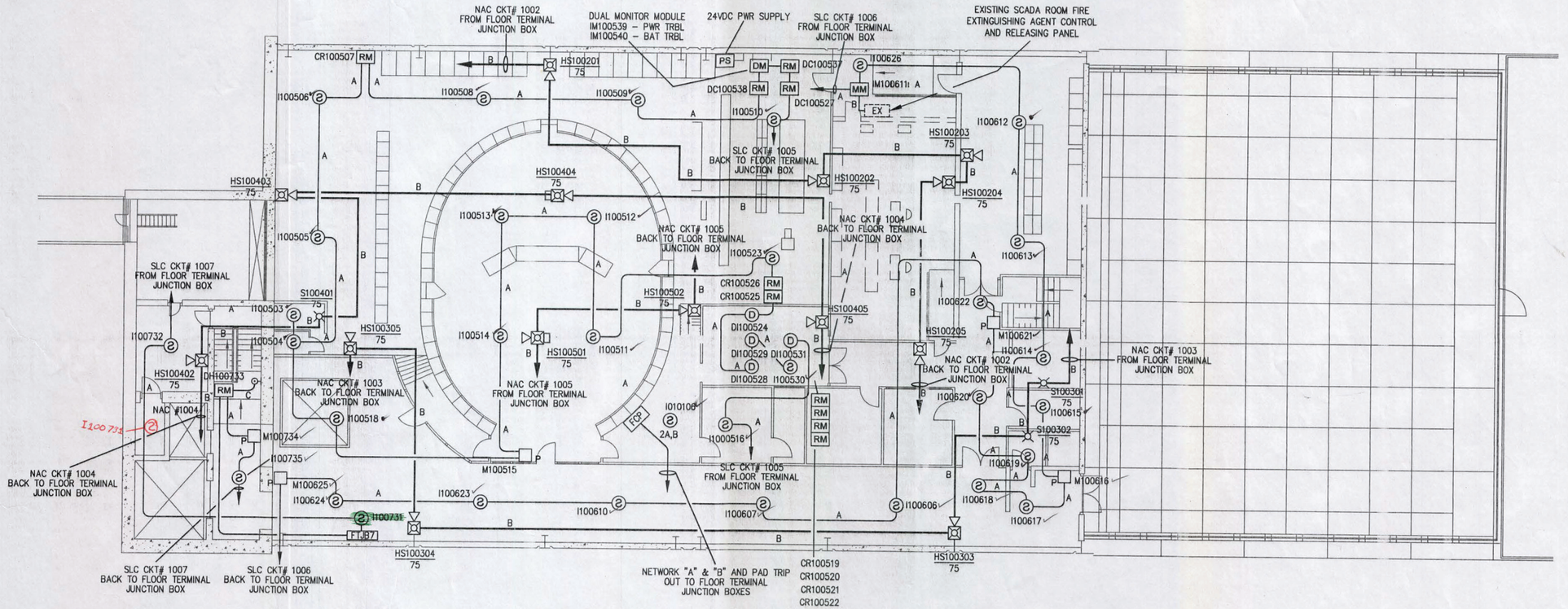

LEVEL 8
PLAN VIEW - ELEVATION 3244.24

30 0 30 60 90

APPROXIMATE GRAPHIC SCALE IN FEET

DEVICE NAMING LEGEND

M010101

- DEVICE NUMBER
- CKT NUMBER
- FLOOR NUMBER
- DEVICE TYPE:
  - M = MANUAL STATION
  - B = PROJECTED BEAM DETECTOR
  - I = IONIZATION TYPE SMOKE DETECTOR
  - T = THERMAL TYPE DETECTOR
  - DC = DAMPER CONTROL RELAY MODULE
  - F = FLAME TYPE DETECTOR
  - LT = LINEAR TYPE THERMAL DETECTOR
  - IM = ADDRESSABLE INPUT MODULE
  - CR = CONTROL RELAY MODULE
  - S = NOTIFICATION APPLIANCE – STROBE
  - HS = NOTIFICATION APPLIANCE – HORN/STROBE

WIRING LEGEND

- A – 2 COND, 18 AWG, TWISTED/SHIELDED, PLENUM SIGNALING LINE CIRCUIT (SLC) WIRING
- B – 2 COND, 14 AWG, SOLID, PLENUM NOTIFICATION APPLIANCE CIRCUIT (NAC) WIRING
- C – 3 COND, 12 AWG, SOLID 120VAC, DOOR HOLDER WIRING
- D – 2 COND, 14 AWG, SOLID, PLENUM 24VDC POWER TO CZM MODULE

ELEVATION 3244.24
NOTIFICATION CKT LOADING TABLE

FLOOR & CIRCUIT NUMBER	ORIGINATES	AREA SERVED	USED (AMPS)	AVAIL (AMPS)	USED % (AMPS)
1002	FTJB# 7	EL.3244.24	0.665	3.0	22.2%
1003	FTJB# 7	EL. 3244.24	0.631	3.0	21.1%
1004	FTJB# 7	EL. 3244.24	0.648	3.0	21.6%
1005	FTJB# 7	EL. 3244.24	0.266	3.0	8.87%
1006	FTJB# 7	SPARE	0.000	3.0	0.00%
1007	FTJB# 7	SPARE	0.000	3.0	0.00%

NOTIFICATION CIRCUIT MAXIMUM WIRE DISTANCE

$R_1 = \frac{V_1 - V_2}{A}$

$D = \frac{R_1}{R_2}$

WHERE:
D = MAXIMUM CIRCUIT DISTANCE
A = TOTAL CURRENT DRAW
V_1 = OUTPUT FROM FACP
V_2 = MAX VOLTAGE DROP (10%)
R_1 = MAX ALLOWABLE RESISTANCE
R_2 = WIRE RESISTANCE (14AWG WIRE)

$R_1 = \frac{24.0 \text{ VDC} - 21.6 \text{ VDC}}{0.665 \text{ AMPS}}$

$R_1 = 3.6090$

$D = \frac{3.6090}{.00314}$

D = 1149 FT

MAXIMUM NAC CIRCUIT LENGTH

REFERENCE DRAWINGS

1. Hiller Systems Inc. Dwg. No. VM4070-11 Sht. 11 of 31.....557-420-M2637
2. General notes and operational notes.....557-420-2280
3. Equipment list and nac load chart.....557-420-2281
4. Sequence of operations matrix.....557-420-2282
5. Linear thermal detector wiring.....557-420-2283
6. Typical initiating device wiring.....557-420-2284
7. Typical initiating device mounting.....557-420-2285
8. Notif. device wiring & mounting.....557-420-2286
9. Aux. pwr supply for fan shutdown.....557-420-2287

REV.	DATE	BY	APP.	DESCRIPTION
02	7/10/05 420-JM	R.W.		POWER PLANT FIRE PROTECTION AS-BUILT PER HILLER SYSTEMS DWG. VM4070-11
01	5/18/04 420-C.S.	C.S.		DENVER DRAWING SUBMITTED FOR POWER PLANT FIRE PROTECTION CONTRACT

ALWAYS THINK SAFETY

UNITED STATES
DEPARTMENT OF THE INTERIOR
BUREAU OF RECLAMATION
COLORADO RIVER STORAGE PROJECT
MIDDLE RIVER DIV. GLEN CANYON UNIT – ARIZONA-UTAH

GLEN CANYON POWER PLANT
ELECTRICAL INSTALLATION
FIRE DETECTION AND ALARM SYSTEMS
NOTIFICATION AND FIRE SAFETY CONTROL DEVICES
EL. 3244.24 LOCATION PLAN

DESIGNED JOSEPH J. MONTESANO TECHNICAL APPROVAL JOSEPH J. MONTESANO
DRAWN J.J.M.
CHECKED LOUIS H. MARTELLA APPROVED V.B. NOKES JR.
DENVER, COLORADO FEBRUARY 23, 1999 ELECTRICAL SYSTEMS GROUP
557-D-3975

GLEN CANYON COMPUTER DRAFTING

DATE AND TIME PLOTTED
PLATE PLOTTED BY USER
CAD SYSTEM DADSYS
CAD FILENAME PLAN

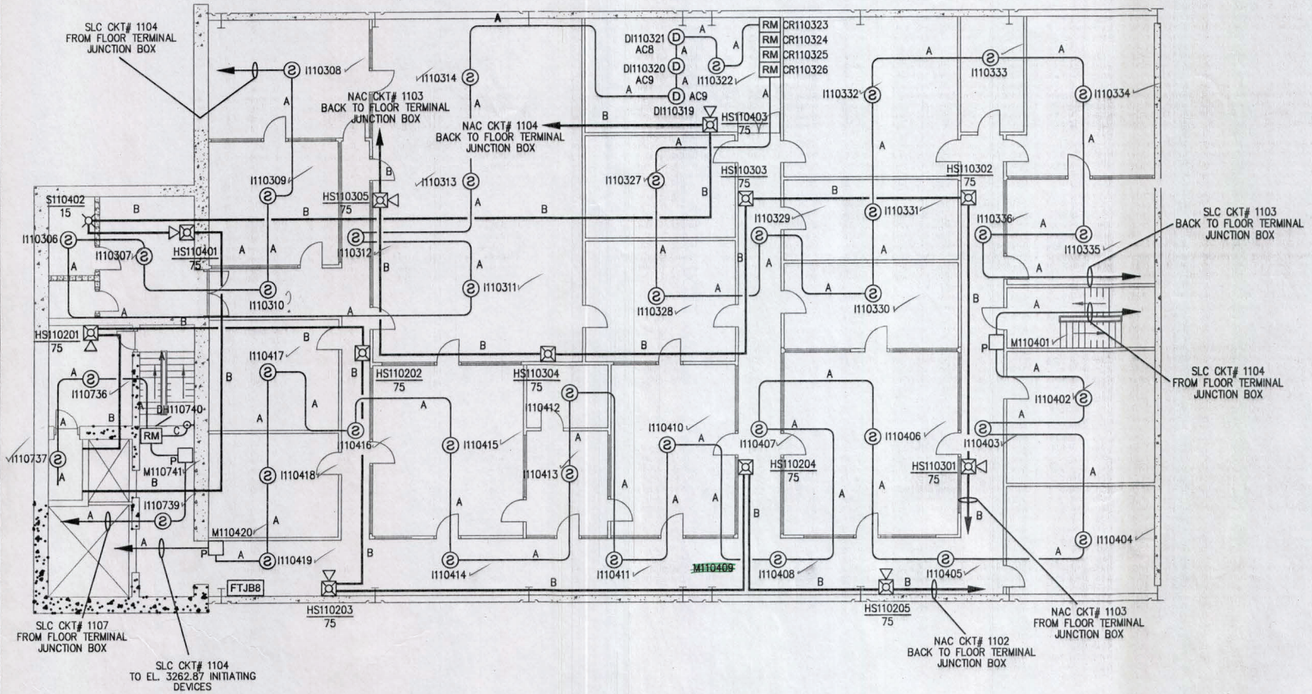

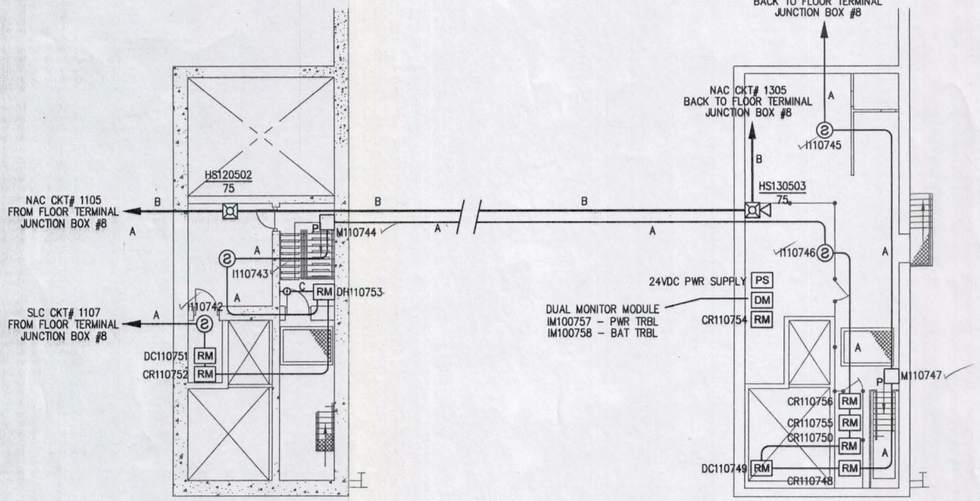

LEVEL 9
PLAN VIEW - ELEVATION 3257.25

30 0 30 60 90

APPROXIMATE GRAPHIC SCALE IN FEET

PLAN VIEW - ELEVATION 3267.87

PLAN VIEW - ELEVATION 3279.12

30 0 30 60 90

APPROXIMATE GRAPHIC SCALE IN FEET

DEVICE NAMING LEGEND

M010101

- DEVICE NUMBER
- CKT NUMBER
- FLOOR NUMBER
- DEVICE TYPE:
  - M = MANUAL STATION
  - B = PROJECTED BEAM DETECTOR
  - I = IONIZATION TYPE SMOKE DETECTOR
  - T = THERMAL TYPE DETECTOR
  - DC = DAMPER CONTROL RELAY MODULE
  - F = FLAME TYPE DETECTOR
  - LT = LINEAR TYPE THERMAL DETECTOR
  - IM = ADDRESSABLE INPUT MODULE
  - CR = CONTROL RELAY MODULE
  - S = NOTIFICATION APPLIANCE – STROBE
  - HS = NOTIFICATION APPLIANCE – HORN/STROBE

WIRING LEGEND

- A – 2 COND, 18 AWG, TWISTED/SHIELDED, PLENUM SIGNALING LINE CIRCUIT (SLC) WIRING
- B – 2 COND, 14 AWG, SOLID, PLENUM NOTIFICATION APPLIANCE CIRCUIT (NAC) WIRING
- C – 3 COND, 12 AWG, SOLID 120VAC, DOOR HOLDER WIRING
- D – 2 COND, 14 AWG, SOLID, PLENUM 24VDC POWER TO CZM MODULE

ELEVATION 3257.25 NOTIFICATION CKT LOADING TABLE

FLOOR & CIRCUIT NUMBER	ORIGINATES	AREA SERVED	USED (AMPS)	AVAIL (AMPS)	USED % (AMPS)
1102	FTJB# 8	EL. 3257.25	0.665	3.0	22.2%
1103	FTJB# 8	EL. 3257.25	0.665	3.0	22.2%
1104	FTJB# 8	EL. 3257.25	0.382	3.0	12.7%
1105	FTJB# 8	STAIRWELL	0.399	3.0	13.3%
1106	FTJB# 8	SPARE	0.000	3.0	0.00%
1107	FTJB# 8	SPARE	0.000	3.0	0.00%

NOTIFICATION CIRCUIT MAXIMUM WIRE DISTANCE

$$R_1 = \frac{V_1 - V_2}{A} \qquad D = \frac{R_1}{R_2}$$

WHERE:
D = MAXIMUM CIRCUIT DISTANCE
A = TOTAL CURRENT DRAW
V_1 = OUTPUT FROM FACP
V_2 = MAX VOLTAGE DROP (10%)
R_1 = MAX ALLOWABLE RESISTANCE
R_2 = WIRE RESISTANCE (14AWG WIRE)

$$R_1 = \frac{24.0\ VDC - 21.6\ VDC}{0.665\ AMPS} \qquad D = \frac{3.6090}{.00314}$$

$R_1 = 3.6090$

D = 1149 FT

MAXIMUM NAC CIRCUIT LENGTH

ELEVATION 3262.87, 3267.87 &3279.12 NOTIFICATION CKT LOADING TABLE

FLOOR & CIRCUIT NUMBER	ORIGINATES	AREA SERVED	USED (AMPS)	AVAIL (AMPS)	USED % (AMPS)
1102	FTJB# 8	EL. 3257.25	0.665	3.0	22.2%
1103	FTJB# 8	EL. 3257.25	0.665	3.0	22.2%
1104	FTJB# 8	EL. 3257.25	0.382	3.0	12.7%
1105	FTJB# 8	STAIRWELL	0.399	3.0	13.3%
1106	FTJB# 8	SPARE	0.000	3.0	0.00%
1107	FTJB# 8	SPARE	0.000	3.0	0.00%

NOTIFICATION CIRCUIT MAXIMUM WIRE DISTANCE

$$R_1 = \frac{V_1 - V_2}{A} \qquad D = \frac{R_1}{R_2}$$

WHERE:
D = MAXIMUM CIRCUIT DISTANCE
A = TOTAL CURRENT DRAW
V_1 = OUTPUT FROM FACP
V_2 = MAX VOLTAGE DROP (10%)
R_1 = MAX ALLOWABLE RESISTANCE
R_2 = WIRE RESISTANCE (14AWG WIRE)

$$R_1 = \frac{24.0\ VDC - 21.6\ VDC}{0.665\ AMPS} \qquad D = \frac{3.6090}{.00314}$$

$R_1 = 3.6090$

D = 1149 FT

MAXIMUM NAC CIRCUIT LENGTH

REFERENCE DRAWINGS

1. Hiller Systems Inc. Dwg. No. VM4070–12 & 13 Sht. 12 & 13 of 31 ..... 557–420–M2638 & 39
2. General notes and operational notes 557–420–2280
3. Equipment list and nac load chart 557–420–2281
4. Sequence of operations matrix 557–420–2282
5. Linear thermal detector wiring 557–420–2283
6. Typical initiating device wiring 557–420–2284
7. Typical initiating device mounting 557–420–2285
8. Notif. device wiring & mounting 557–420–2286
9. Aux. pwr supply for fan shutdown 557–420–2287

REV.	DATE	BY	APP.	DESCRIPTION
03	11-15-12 420-C.S.			REVISED HORN AND STROBE LIGHT LOCATIONS.
02	7/10/05 420-J.M.	R.W.		POWER PLANT FIRE PROTECTION AS-BUILT PER HILLER SYSTEMS DWG. VM4070-12 & 13
01	5/18/04 420-C.S.	C.S.		DENVER DRAWING SUBMITTED FOR POWER PLANT FIRE PROTECTION CONTRACT

ALWAYS THINK SAFETY

UNITED STATES
DEPARTMENT OF THE INTERIOR
BUREAU OF RECLAMATION
COLORADO RIVER STORAGE PROJECT
MIDDLE RIVER DIV. GLEN CANYON UNIT – ARIZONA-UTAH
GLEN CANYON POWER PLANT
ELECTRICAL INSTALLATION
FIRE DETECTION AND ALARM SYSTEMS

NOTIFICATION AND FIRE SAFETY CONTROL DEVICES
EL. 3257.25, 3267.87 AND 3279.12 LOCATION PLAN

DESIGNED JOSEPH J. MONTESANO TECHNICAL APPROVAL JOSEPH J. MONTESANO
DRAWN J.J.M.
CHECKED LOUIS H. MARTELLA APPROVED V.B. NOKES JR.
DENVER, COLORADO FEBRUARY 23, 1999 ELECTRICAL SYSTEMS GROUP

557-D-3976

GLEN CANYON COMPUTER DRAFTING

DATE AND TIME PLOTTED
PLOTTED BY
CAD SYSTEM
CAD FILENAME
PLAN

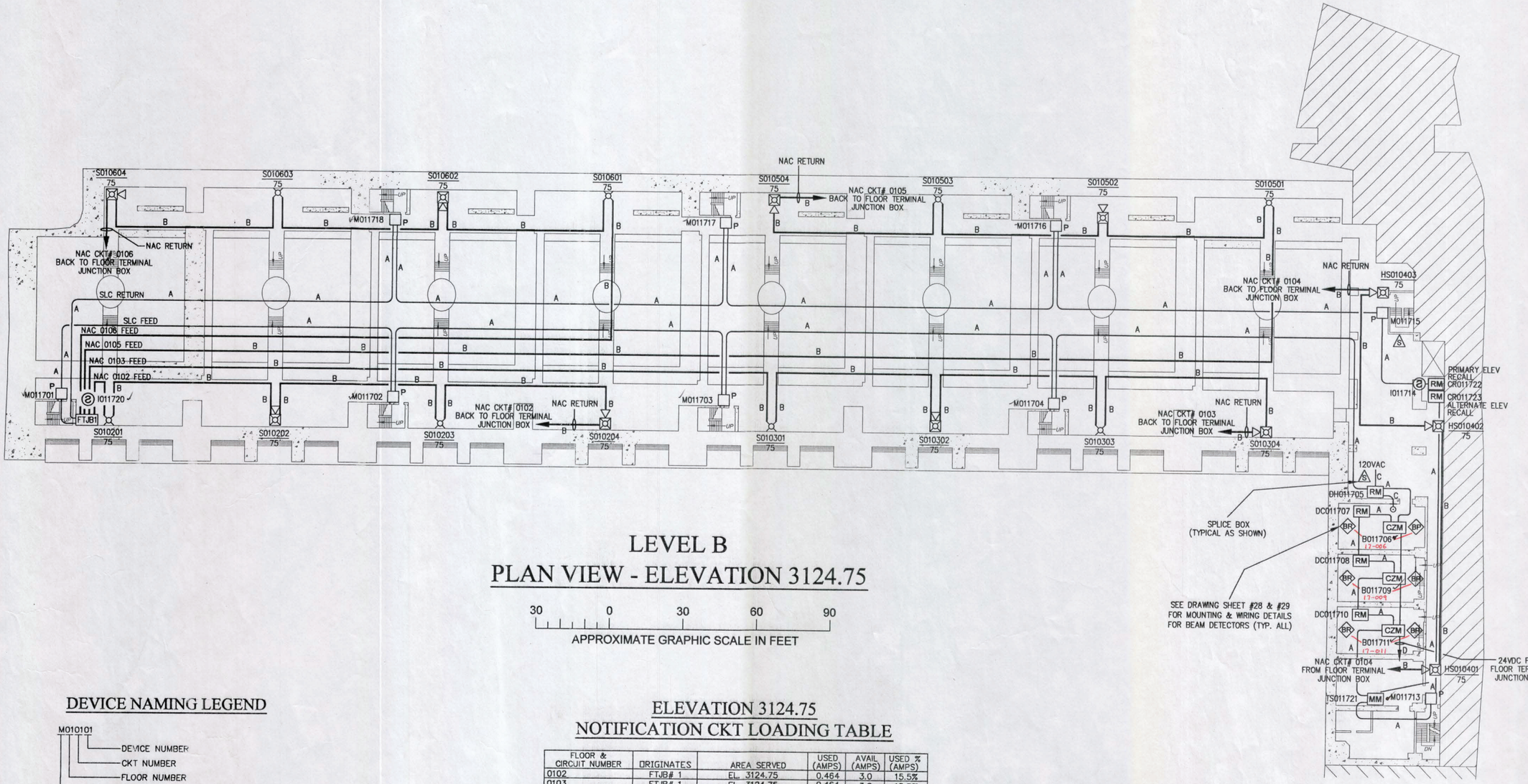

LEVEL B
PLAN VIEW - ELEVATION 3124.75

30 0 30 60 90

APPROXIMATE GRAPHIC SCALE IN FEET

DEVICE NAMING LEGEND

M010101

- DEVICE NUMBER
- CKT NUMBER
- FLOOR NUMBER
- DEVICE TYPE:
  - M = MANUAL STATION
  - B = PROJECTED BEAM DETECTOR
  - I = IONIZATION TYPE SMOKE DETECTOR
  - T = THERMAL TYPE DETECTOR
  - DC = DAMPER CONTROL RELAY MODULE
  - F = FLAME TYPE DETECTOR
  - LT = LINEAR TYPE THERMAL DETECTOR
  - IM = ADDRESSABLE INPUT MODULE
  - CR = CONTROL RELAY MODULE
  - S = NOTIFICATION APPLIANCE – STROBE
  - HS = NOTIFICATION APPLIANCE – HORN/STROBE

WIRING LEGEND

- A – 2 COND, 18 AWG, TWISTED/SHIELDED, PLENUM SIGNALING LINE CIRCUIT (SLC) WIRING
- B – 2 COND, 14 AWG, SOLID, PLENUM NOTIFICATION APPLIANCE CIRCUIT (NAC) WIRING
- C – 3 COND, 12 AWG, SOLID 120VAC, DOOR HOLDER WIRING
- D – 2 COND, 14 AWG, SOLID, PLENUM 24VDC POWER TO CZM MODULE

ELEVATION 3124.75
NOTIFICATION CKT LOADING TABLE

FLOOR & CIRCUIT NUMBER	ORIGINATES	AREA SERVED	USED (AMPS)	AVAIL (AMPS)	USED % (AMPS)
0102	FTJB# 1	EL. 3124.75	0.464	3.0	15.5%
0103	FTJB# 1	EL. 3124.75	0.464	3.0	15.5%
0104	FTJB# 1	EL. 3124.75	0.399	3.0	13.3%
0105	FTJB# 1	EL. 3124.75	0.464	3.0	15.5%
0106	FTJB# 1	EL. 3124.75	0.464	3.0	15.5%
0107	FTJB# 1	SPARE	0.000	3.0	0.00%

NOTIFICATION CIRCUIT MAXIMUM WIRE DISTANCE

$R_1 = \frac{V_1 - V_2}{A}$

$D = \frac{R_1}{R_2}$

WHERE:
- D = MAXIMUM CIRCUIT DISTANCE
- A = TOTAL CURRENT DRAW
- V_1 = OUTPUT FROM FACP
- V_2 = MAX VOLTAGE DROP (10%)
- R_1 = MAX ALLOWABLE RESISTANCE
- R_2 = WIRE RESISTANCE (14AWG WIRE)

$R_1 = \frac{24.0\ VDC - 21.6\ VDC}{0.464\ AMPS}$

$R_1 = 5.1724$

$D = \frac{5.1724}{.00314}$

D = 1647 FT

MAXIMUM NAC CIRCUIT LENGTH

REFERENCE DRAWINGS

1. Hiller Systems Inc. Dwg. No. VM4070-5 Sht. 5 of 31.....557-420-M2631
2. General notes and operational notes.....557-420-2280
3. Equipment list and nac load chart.....557-420-2281
4. Sequence of operations matrix.....557-420-2282
5. Linear thermal detector wiring.....557-420-2283
6. Typical initiating device wiring.....557-420-2284
7. Typical initiating device mounting.....557-420-2285
8. Notif. device wiring & mounting.....557-420-2286
9. Aux. pwr supply for fan shutdown.....557-420-2287

REV.	DATE	BY	APP.	DESCRIPTION
02	11/16/12 420-			REVISED HORN AND STROBE LIGHT LOCATIONS.
01	7/10/05 420-JM	R.V.		POWER PLANT FIRE PROTECTION AS-BUILT PER HILLER SYSTEMS DWG. VM4070-5
00	5/18/04 420-C.S.	C.S.		DENVER DRAWING SUBMITTED FOR POWER PLANT FIRE PROTECTION CONTRACT

ALWAYS THINK **SAFETY**

UNITED STATES
DEPARTMENT OF THE INTERIOR
BUREAU OF RECLAMATION
COLORADO RIVER STORAGE PROJECT
MIDDLE RIVER DIV, GLEN CANYON UNIT – ARIZONA-UTAH
GLEN CANYON POWER PLANT
ELECTRICAL INSTALLATION
FIRE DETECTION AND ALARM SYSTEMS
NOTIFICATION AND FIRE SAFETY CONTROL DEVICES
EL. 3124.75 LOCATION PLAN

DESIGNED JOSEPH J. MONTESANO TECHNICAL APPROVAL JOSEPH J. MONTESANO
DRAWN J.J.M.
CHECKED LOUIS H. MATELLA APPROVED V.B. NOKES JR.
DENVER, COLORADO FEBRUARY 23, 1999 ELECTRICAL SYSTEMS GROUP
557-D-4067

GLEN CANYON COMPUTER DRAFTING

DATE AND TIME PLOTTED
PLOTTED BY USER
CAD SYSTEM
CAD FILENAME
FILNAM

SAMPLE NAMEPLATES

STRAINER DRAIN

EXTENDED TYPE

STRAINER
DRAIN

COMPACT TYPE

FIRE PROTECTION
WATER SUPPLY
CAUTION
2 1/2" OUTLET FOR FIRE
DEPARTMENT USE ONLY

INSCRIPTION AND CLOSE RANGE
INFORMATIONAL LETTERING

GOTHIC LETTERING CHART

1/4"
NORMAL (Avg. width .271")
ABCDEFGHIJKLMN
ABCDEFGHIJKLMNOP
CONDENSED (Avg. width .234")

3/16"
NORMAL (Avg. width .203")
ABCDEFGHIJKLMNOPQR
ABCDEFGHIJKLMNOPQRSTU
CONDENSED (Avg. width .175")

5/32"
NORMAL (Avg. width .163")
ABCDEFGHIJKLMNOPQRSTUV
ABCDEFGHIJKLMNOPQRSTUVWXYZ
CONDENSED (Avg. width .140")

1/8"
NORMAL (Avg. width .135")
ABCDEFGHIJKLMNOPQRSTUVWXYZ
ABCDEFGHIJKLMNOPQRSTUVWXYZ
CONDENSED (Avg. width .116")

3/32"
NORMAL (Avg. width .103")
ABCDEFGHIJKLMNOPQRSTUVWXYZ
ABCDEFGHIJKLMNOPQRSTUVWXYZ
CONDENSED (Avg. width .086")

*Average widths listed include spacing between letters.

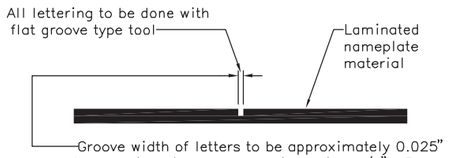

LETTERING DETAIL

SIZES AND LETTER SPACING OF NAMEPLATES

FOR DIMENSIONS SEE TABLES 1 & 2

TABLE 1
WIDTH
TABLE FOR ALL LETTERING THE SAME SIZE

GOTHIC LETTER SIZE	NO. OF LINES 1 W	1 B	2 W	2 S	2 B	3 W	3 S	3 B
1/4	1.00	.375	1.25	.15	.30	1.75	.15	.35
3/16	.75	.28	1.00	.11	.26	1.25	.11	.23
5/32	.50	.17	.75	.08	.18	1.00	.09	.18
1/8	.50	.19	.75	.08	.21	1.00	.08	.23
3/32	.50	.20	.50	.07	.12	.75	.08	.15

Dim. in inches

For other lettering sizes, more than three lines, or various size lettering on same nameplate, arrange width as follows:
Space(S)=Average of letter sizes on each side of space x 0.6.
Border(B)=Largest lettering size on name-plate x 1.2 + half of odd amounts to give total width(W) to even 1/4".

TABLE 3
STANDARD NAMEPLATES
FOR ELECTRICAL EQUIPMENT ONLY

NAMEPLATE SIZE NO.	NAMEPLATE DIMENSIONS L	W	B	LETTERING SIZE
1	1 1/8	7/16	1/16	3/32
2	1 1/2	9/16	1/8	3/32
3	1 3/4	5/8	1/8	1/8
4	2 1/4	3/4	1/8	3/16
5	3	1	7/32	3/16
6	4	1 1/4	1/4	1/4
7	6	1 3/4	1/4	1/2

Above nameplates shall be used for electrical equipment unless otherwise specified.

Dim. in inches

TABLE 2
LENGTH

NO.OF LETTERS AND SPACES	LETTERING SIZE ON LONGEST LINE (NORM=NORMAL; COND=CONDENSED) 1/4 NORM	1/4 COND	3/16 NORM	3/16 COND	5/32 NORM	5/32 COND	1/8 NORM	1/8 COND	3/32 NORM	3/32 COND
1										
2										
3										
4	3	3	3	3	3	3	3	3	3	3
5										
6										
7	3 1/2									
8		3 1/2								
9	4		3 1/2							
10		4								
11	4 1/2			3 1/2						
12	5	4 1/2	4		3 1/2					
13										
14	5 1/2	5	4 1/2	4		3 1/2				
15					4		3 1/2			
16	6									
17		5 1/2	5	4 1/2						
18	6 1/2				4 1/2	4				
19		6	5 1/2	5			4	3 1/2		
20	7				5	4 1/2				
21		6 1/2					4 1/2	4		
22	7 1/2		6	5 1/2						
23		7								
24	8									
25	8 1/2	7 1/2	6 1/2	6	5 1/2	5	5	4 1/2	4	3 1/2
26										

For other lettering sizes or longer nameplates, use the following formula:
L = A(N+n) + 2M (Nameplate length cut to nearest 1/2").
L – Length of nameplate.
A – Average letter width on longest line.
N – Number of letters on longest line.
n – Number of spaces on longest line
M – Margin=Average letter width plus 5/8".

MOUNTING OF NAMEPLATES

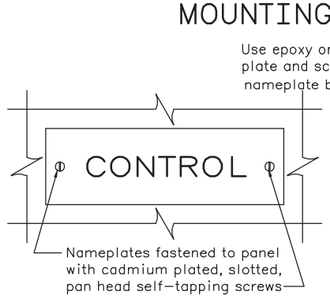

TYPICAL MOUNTING
ON PANEL

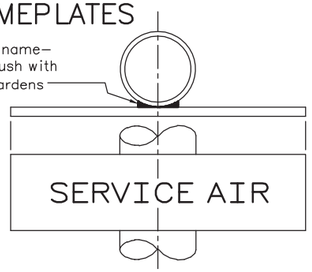

TYPICAL MOUNTING
ON VERTICAL PIPE

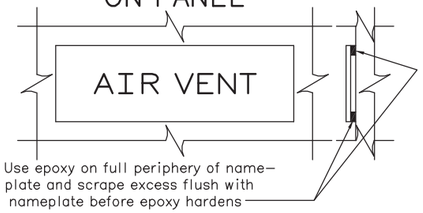

TYPICAL MOUNTING
ON CONCRETE WALL

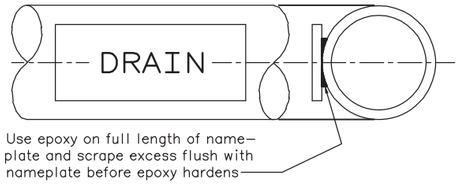

TYPICAL MOUNTING
ON HORIZONTAL PIPE

DRILLING OF NAMEPLATES
(For panel mounting only)

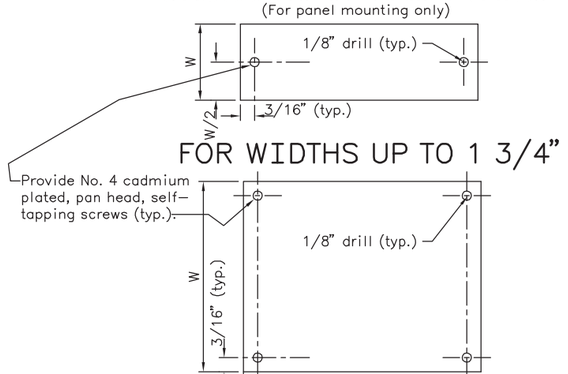

FOR WIDTHS UP TO 1 3/4"

FOR WIDTHS OF 2" TO 3"

FOR WIDTHS OVER 3"

NAMEPLATE MATERIAL

NOTE – All nameplate material shall be suitable for exposure to direct sunlight without detrimental fading.
TYPE A – Material shall be laminated phenolic resin sheets 1/16" or 3/32" thick (as specified) opaque black surface, white layer adjacent to surface layer, buffed or satin finish. Sheets to be cut to size with square edges. Engraving to cut through black surface to white layer. Shall conform to Military Specification MIL – P – 78A and Federal Specification L–P–509a.
TYPE B – Same as Type A except Chinese red surface or equivalent.
TYPE C – Same as Type A except 1/8", 3/16", or 1/4" thick (as specified).
TYPE D – Same as Type A except Chinese red surface or equivalent and 1/8", 3/16", or 1/4" thick (as specified).

NAMEPLATE USES

TYPE A – For panel mounting with self-tapping screws. For concrete wall or other flat mounting to identify valves, equipment, etc. Mount with epoxy cement–indoors or outdoors.
TYPE B – Red nameplates are restricted to uses such as fire protection equipment, warning inscriptions, and emergency devices. Methods of mounting shall be the same as for Type A.
TYPE C – For mounting on non–flat surface with epoxy cement.
TYPE D – Restricted to uses such as fire protection, equipment warning inscriptions, and emergency devices. For mounting on non–flat surfaces with epoxy cement.

LETTERING

Use normal or condensed letter types shown on the Gothic Lettering Chart. The normal size of lettering shall be not less than 3/16" high (1/4" preferred), except that 5/32" and smaller may be used for information and instructions that may be read at close range. Larger size lettering may be specified for out–of–doors installations or where necessary.

NOTES

This drawing supersedes Drawings No. 40–D–5173, 106–D–341, and 106–D–342.
This drawing and Drawings No. 40–D–6124, –6130, and –6187 supersede Drawing No. 40–D–2567.
Table 3 for ELECTRICAL EQUIPMENT ONLY, Tables 1 and 2 for all other equipment.

10 – 13 – 00 D – L.G.	Redrawn in AutoCAD
12 – 11 – 79 D – L.H.	Redrawn
11 – 6 – 70 D – D.A.W.	Add Table 3 and Note

ALWAYS THINK SAFETY

UNITED STATES
DEPARTMENT OF THE INTERIOR
BUREAU OF RECLAMATION

STANDARD DESIGNS

STANDARD NAMEPLATES

DESIGNED D.A.W. TECHNICAL APPROVAL C.G.Bates
DRAWN J.M.F. SUBMITTED Jack W. Hilf
CHECKED D.M.B.–S.K.K.–E.M.J. APPROVED B.P.Bellport CHIEF ENGINEER

CADD SYSTEM	CADD FILENAME	DATE AND TIME PLOTTED
AutoCAD Release 12_c2–a	40D6324.DWG	NOVEMBER 29, 1994 12:28
DENVER, COLORADO	MAY 1970	40–D–6234

FIGURE 1

DIMENSIONS (INCHES) MALLEABLE IRON ONE-HOLE CLAMP

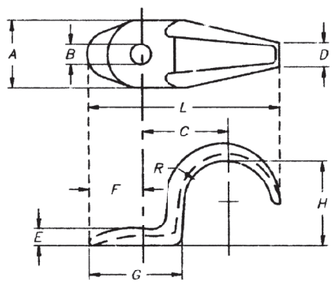

FOR RIGID CONDUIT

SIZE	A	B	C	D	E	F	G	H	L	R
½	21/32	19/64	1 1/16	5/16	7/32	19/32	1 3/16	51/64	2 7/32	27/64
¾	7/8	5/16	1 5/32	1/2	1/4	3/4	1 3/8	1 11/32	2 19/32	17/32
1	1 1/16	5/16	1 11/32	7/16	5/16	29/32	1 47/64	1 9/32	3 1/8	23/64
1 1/4	1 5/16	13/32	1 11/16	1/2	5/16	1 3/32	1 7/8	1 5/8	3 13/16	27/64
1 1/2	1 5/8	33/64	2	1/2	11/32	1 3/32	2	1 47/64	4 5/16	63/64
2	1 7/16	21/64	2 9/16	5/8	7/16	1 3/16	2 3/8	2 5/32	5 1/4	1 15/64
2½	1 13/16	9/16	3	3/4	9/16	1 1/4	2 13/16	2 13/16	6	1 5/32
3	1 3/4	9/16	3 5/16	7/8	41/64	1 3/8	2 49/64	3 7/16	6 13/16	1 49/64
3½	2	11/16	3 5/8	1	3/4	1 3/4	3 3/16	3 7/8	7 3/4	2 1/32
4	2 1/4	11/16	4 1/2	1 1/4	3/4	2	4 5/32	4 3/8	9 1/16	2 1/32

FOR ELECTRICAL METALLIC TUBING

SIZE	A	B	C	D	E	F	G	H	L	R
½	21/32	1/4	53/64	3/8	5/32	35/64	1	21/32	1 13/16	23/64
¾	41/64	1/4	1 3/32	3/8	5/32	1/2	1 1/16	39/64	2 1/8	15/64
1	25/32	9/32	1 1/8	3/8	1/4	3/4	1 9/32	1 5/32	2 19/32	19/64
1 1/2	29/32	9/32	1 23/64	3/8	1/4	3/4	1 5/16	1 1/4	3	39/64
1 1/2	7/8	5/16	1 17/32	3/8	1/4	3/4	1 5/8	1 47/64	3 5/16	27/64
2	1	27/64	1 27/32	3/8	5/16	3/4	1 7/16	2 5/32	3 7/8	1 7/64

SUPERSEDES 104-D-262

FIGURE 2

SUPPORTING CONDUIT TO STEEL H BEAM (EXPOSED)

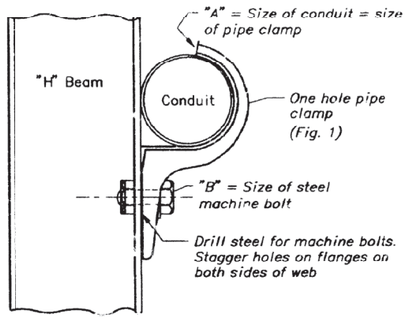

A	B
½"	No.12 x 1"
¾"	¼" x 1"
1"	¼" x 1"
1¼"	5/16 x 1"
1½"	⅜ x 1"
2"	½ x 1½"
2½"	½ x 1½"
3"	½ x 1½"
3½"	⅝ x 1½"
4"	⅝ x 1½"

SUPERSEDES 104-D-270

FIGURE 3

SUPPORTING CONDUIT ON CONCRETE SURFACE WITH STANDARD ONE-HOLE M.I. PIPE CLAMP

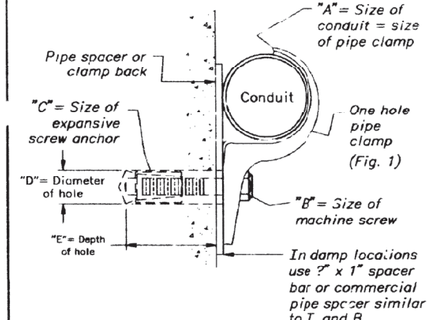

A	B	C *	D	E	NOTE:
½"	#12x½"	#12x24	½"	⅞"	All conduits not otherwise supported shall be held in place by clamps shown above, located at approx. 10 foot intervals.
¾"	¼"x1¾"	¼"x20	½"	1½"	
1"	¼"x1¾"	¼"x20	½"	1½"	
1¼"	5/16"x2"	5/16"x18	⅝"	1¾"	
1½"	⅜"x2½"	⅜"x16	½"	2"	
2"-2½"-3"	½"x2½"	½"x13	⅞"	2¼"	
3½"-4"	⅝"x3"	⅝"x11	1⅛"	2¾"	

* The expansion screw anchor shall be of corrosion resistant material

SUPERSEDES 104-D-283

FIGURE 4

HIGH VOLTAGE CABLE CONDUIT RISER SUPPORT DETAILS

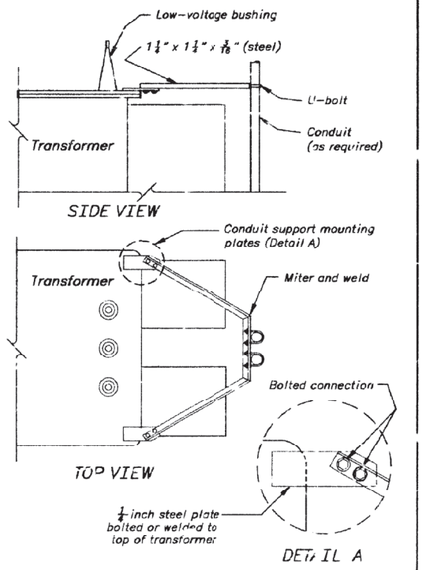

SUPERSEDES 104-D-806

FIGURE 5

MOUNTING CONDUIT TO TUBULAR STEEL STRUCTURE

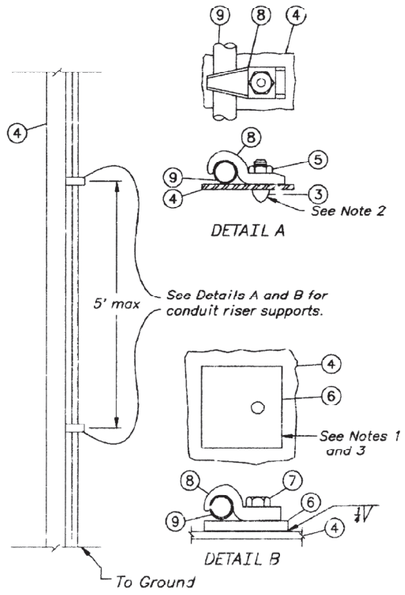

ITEM	DESCRIPTION
1	
2	
3	Power driver threaded stud (⅜" Dia.)
4	Tubular steel structure
5	Self-Locking hex nut (For item 3)
6	Steel plate (1 inch thick)
7	⅜" Dia. U.S. standard bolt (Length as Required)
8	Malleable iron pipe strap (Steel City Type HS)
9	Rigid metallic conduit

NOTES

1. For Detail B the 1" steel plate shall have an area larger than the projected area of the connecting clamp.
2. The ⅜" stud shall be driven into the tubular steel structure with a powder actuated fastening tool equal to Rainset Fastening System, as manufactured by Illinois Tool Works, Wood Dale, IL.
3. The 1" thick steel plate shall be welded to the tubular steel structure and have a ¾" deep hole drilled and tapped for a ⅜" U.S. standard bolt.

SUPERSEDES 40-D-6309 IN PART

THIS DRAWING SUPERSEDES DRAWINGS AS NOTED IN FIGURES, 2004-09-30.

ALWAYS THINK SAFETY

UNITED STATES
DEPARTMENT OF THE INTERIOR
BUREAU OF RECLAMATION

STANDARD DESIGNS

ELECTRICAL INSTALLATION

CONDUIT CLAMP AND CONDUIT SUPPORTS TYPICAL DETAILS

DESIGNED _____ CHECKED _____
DRAWN _____ TECH. APPR. _____
APPROVED _____ P.E.
MANAGER, ELECTRICAL SYSTEMS GROUP

DENVER, COLORADO 2004-09-30 SHEET 1 OF 1

40-D-7094

CAD SYSTEM MicroStation V8 16.0a
CAD FILE NAME 40-D-7094.DWG
DATE AND TIME PLOTTED OCTOBER 4, 2004 11:39
PLOTTED BY PCRAMOS

Released

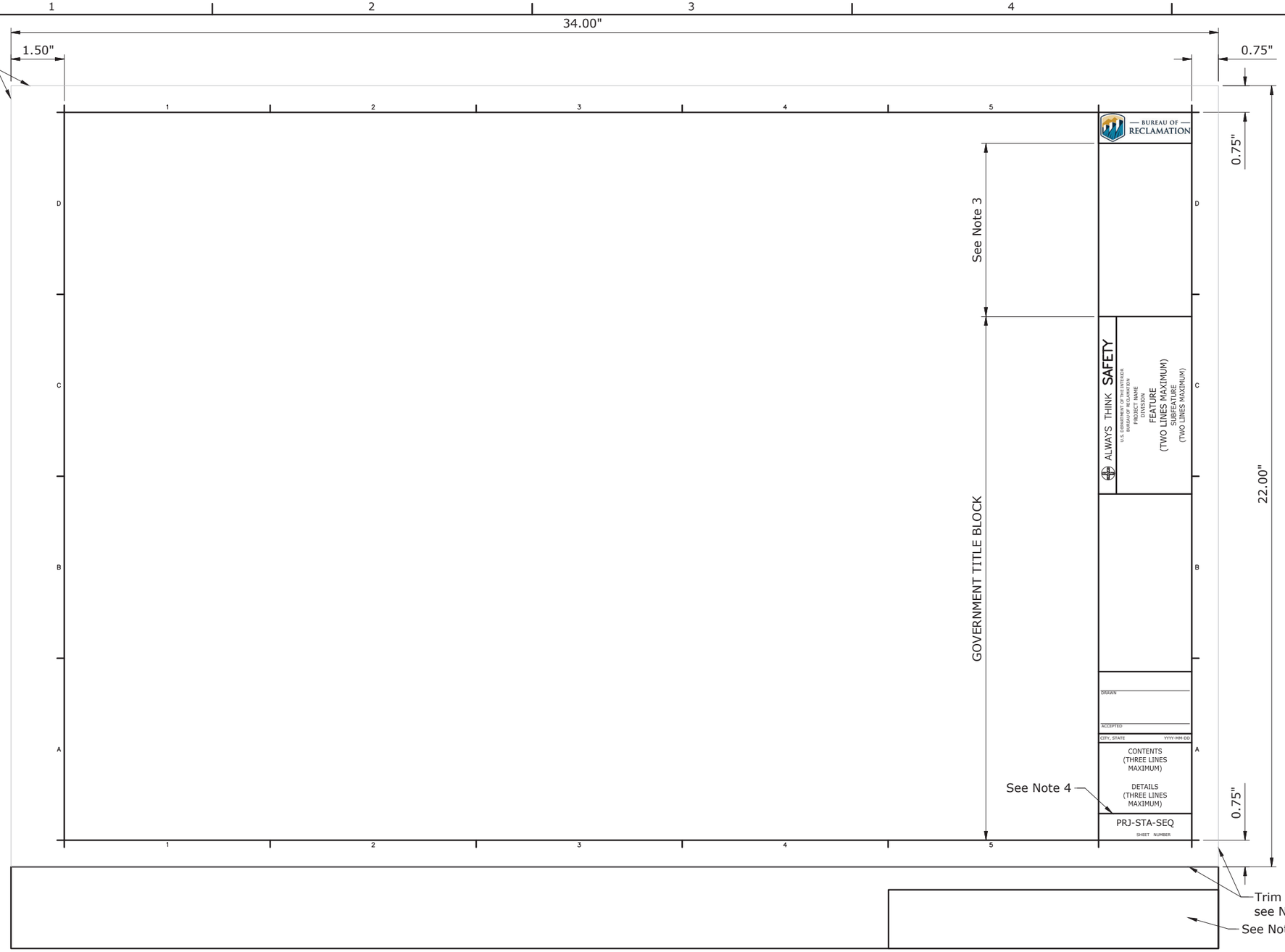

ALWAYS THINK SAFETY

U.S. DEPARTMENT OF THE INTERIOR
BUREAU OF RECLAMATION
YAKIMA PROJECT
KENNEWICK DIVISION

CHANDLER PUMPING PLANT

SWITCHYARD - STEEL STRUCTURES

SAMPLE TITLE

DRAWING BORDER

MANUFACTURER OR CONTRACTOR
DRAWN
ACCEPTED
TITLE

SAMPLE SIGNATURE LINES

REFERENCE

1. Information Management Handbook (IMH - 2020), Chapter 2, Section 9.A.4 - "Sheet Border" and Figures G2, G3, and G4.

NOTES

1. Government will provide contractor with an electronic AutoCAD template to be used by manufacturer for submittal of manufacturer's/contractors drawing in Government format.
2. The manufacturer's title block and drawing revisions as a result of the submittal process, may be located anywhere outside of the trim lines. The location shown on this drawing is the Government's preferred area.
3. The manufacturer shall show the Government solicitation/specification number, the manufacturer's name, drawing and sheet number in this area.
4. Government drawing number(s) will be issued at the end of the submittal process and drawing will be entered into the Government's electronic drawing system by the Government.
5. Trim lines shall be shown on all submitted drawings.

BUREAU OF RECLAMATION

ALWAYS THINK SAFETY

U.S. DEPARTMENT OF THE INTERIOR
BUREAU OF RECLAMATION
STANDARD DRAWINGS

STANDARD AND TYPICAL DESIGNS

GOVERNMENT DRAWING FORMAT

REV NO		
3	2023-04-20 Barthel, Rodney J P.E.	D UPDATED DRAWING TO CURRENT DRAWING RECORDS SYSTEM. MINOR REVISIONS.
2	2015-03-25 Barthel, Rodney J P.E.	D UPDATED TITLE BLOCK AND SIGNATURE LINES.
1	2014-12-17 E. Mendin	D UPDATED TITLE BLOCK AND SIGNATURE LINES.

S. NITTA
DESIGNED
S. NITTA
DRAWN
D. CRAWFORD
CHECKED
R. BARTHEL, P.E.
TECH. APPR.
R.W. LAFOND, P.E.
APPROVED
ADMIN APPROVAL -

DENVER, CO

DRAWING BORDER, SAMPLE TITLE BLOCK, AND SIGNATURE LINES

40-D-7102

SHEET 1

Released

IEEE STANDARD CONTROL & PROTECTION DEVICE FUNCTION NUMBERS

(SEE NOTES 1, 2, AND 3)

01___Master Element
02___Time-Delay Starting or Closing Relay (TDPU)
03___Checking or Interlocking Relay
04___Master Contactor
05___Stopping Device
06___Starting Circuit Breaker
07___Rate-of-Change Relay
08___Control Power Disconnecting Device
09___Reversing Device
10___Unit Sequence Switch
11___ Multifunction Device
12___Overspeed Device
13___Synchronous-speed Device
14___Underspeed Device
15___Speed or Frequency Matching Device
16___Reserved for future application
17___Shunting or Discharge Switch
18___Accelerating or Decelerating Device
19___Starting-to-Running Transition Contactor
20___Electrically Operated Valve
21___Distance Relay
22___Equalizer Circuit Breaker
23___Temperature Control Device
24___Volts Per Hertz Relay
25___Synchronizing or Synchronism-Check Device
26___Apparatus Thermal Device
27___Undervoltage Relay
28___Flame Detector
29___Isolating Contactor
30___Annunciator Relay
31___Separate Excitation Device
32___Directional Power Relay
33___Position Switch
34___Master Sequence Device
35___Brush-Operating or Slip-Ring Short-Circuiting Device
36___Polarity or Polarizing Voltage Device
37___Undercurrent or Underpower Relay
38___Bearing Protective Device
39___Mechanical Condition Monitor
40___Field Relay
41___Field Circuit Breaker
42___Running Circuit Breaker
43___Manual Transfer or Selector Device
44___Unit Sequence Starting Relay
45___Atmospheric Condition Monitor
46___Reverse-Phase or Phase-Balance Current Relay
47___Phase-Sequence Voltage Relay
48___Incomplete Sequence Relay
49___Machine or Transformer Thermal Relay
50___Instantaneous Overcurrent or Rate-of-Rise Relay
51___AC Time Overcurrent Relay
52___AC Circuit Breaker
53___Exciter or DC Generator Relay
54___Turning Gear Engaging Device
55___Power Factor Relay
56___Field Application Relay
57___Short-Circuiting or Grounding Device
58___Rectification Failure Relay
59___Overvoltage Relay
60___Voltage or Current Balance Relay
61___Density Switch or Sensor
62___Time-Delay Stopping or Opening Relay (TDDO)
63___Pressure Switch
64___Ground Detector Relay
65___Governor
66___Notching or Jogging Device
67___AC Directional Overcurrent Relay
68___Blocking Relay
69___Permissive Control Device
70___Rheostat
71___Level Switch
72___DC Circuit Breaker
73___Load-Resistor Contactor
74___Alarm Relay
75___Position Changing Mechanism
76___DC Overcurrent Relay
77___Pulse Transmitter
78___Phase-Angle Measuring or Out-of-Step Protective Relay
79___AC Reclosing Relay
80___Flow Switch
81___Frequency Relay
82___DC Reclosing Relay
83___Automatic Selective Control or Transfer Relay
84___Operating Mechanism
85___Carrier or Pilot-Wire Receiver Relay
86___Lockout Relay
87___Differential Protective Relay
88___Auxiliary Motor or Motor Generator
89___Line Switch
90___Regulating Device
91___Voltage Directional Relay
92___Voltage and Power Directional Relay
93___Field-Changing Contactor
94___Tripping or Trip-Free Relay
95___Reserved for future application
96___Reserved for future application
97___Reserved for future application
98___Creep Detector Device
99___Reserved for future application

FIRST LETTER SUFFIX OF THE DEVICE DESIGNATION

(SEE NOTES 1, 2, AND 3)

A___Governor System (or Actuator Systems--gates)
B___Battery Charging & Monitoring System
C___High-Voltage Cable System
D___Data Acquisition System
E___Excitation System including Transformer and Regulator but not Main Field
F___Fire and CO2 System
G___Main Generator including Auxiliary Systems
G/M___Generator Motor including Auxiliary Systems in Pumped Storage Applications
H___Turbine or Main Pump Including Auxiliary Systems
I___Isolated and Other Power Bus Systems (not High Voltage Cable)
J___Power Circuit Breaker including Auxiliary Systems
K___Power Transformer including Auxiliary Systems
L___Annunciator System, Security System
M___Main Pump Motor including Auxiliary Systems and Variable Speed Drive
N___Air (Pneumatic) System
O___Not used
P___Penstock or Discharge Line System
Q___Oil Storage, Handling, Purification System
R___Field Flashing System or Phase Reversal Switch including Auxiliary Systems
S___Station Service Substation System including Engine/Generator System
T___Tone and Transfer Trip System
U___Unit Control Circuit System or Uninterruptible Power Supply System
V___Intake and/or Discharge Valve System
W___Water Systems including Intake/Outlet Works and Plant Water and Sump Systems
X___Defined for systems unique to a facility
Y___Defined for systems unique to a facility
Z___Defined for systems unique to a facility

SECOND AND SUBSEQUENT LETTER SUFFIXES OF THE DEVICE DESIGNATION

(SEE NOTES 1, 2, AND 3)

A___Abnormal, A.C., Acceleration, Admission, Alarm, Amperes, Automatic, Auxiliaries, Phase A, etc.
B___Backup, Bearing, Block, Blower, Booster, Brakes, Bus, Button, Bypass, Phase B, etc.
C___Cable, Carrier, Charger, Check, Chlorination, Close, Collector, Common, Compensator, Compressor, Control, Cooling, Current, Cycle, Cylinder, Phase C, Conveyor, etc.
D___D.C., Deceleration, Delay, Depress, Detector, Dielectric, Differential, Discharge, Disconnect, Discordance, Domestic, Down, Downstream, Draft Tube, Drain, etc.
E___Ejector, Elevator, Emergency, Explosive, etc.
F___Failure, Fan, Fault, Feeder, Field, Filter, Fire, Flame, Flow, Follower, Forward, Frequency, Full, Fumes, Fuse, etc.
G___Gas, Gate, Gating (SCR), Generate, Ground, Guide Bearing, etc.
H___Halon, Hand, Heat, Heaters, High, Hoist, Horn, Hot, Housing, Hydropneumatic Tank, etc.
I___Indication, Initial, Inlet, Input, Instantaneous, Intake, Interface, Interlock, Interrupt, Inverter, Ionization, etc.
J___Jacking, Jet, etc.
K___Key, Transformer
L___Lamps, Left, Level, Lights, Limit, Line, Liquid, Local, Logic, Loss, Louvers, Low, Lower, Lubrication, etc.
M___Main, Malfunction, Manual, Meter, Metering, Motor, etc.
N___Negative, Network, Neutral, Normal, etc.
O___Open, Outlet, Output, etc.
P___Packing Box, Parallel, Parameter, Penstock, Phase, Phaseback, Pilot, Pit, Position, Positive, Potential, Pothead, Power, Pressure, Primary, Protection, Pulse, Pump, Purification, Push, etc.
Q___Oil, etc.
R___Raise, Reactor, Reclose, Record, Rectifier, Reed, Refrigeration, Regulate, Relay, Release, Relief, Remote, Reservoir, Reset, Resistor, Right, Rotation, Rotor, Runner, etc.
S___Seals, Secondary, Selector, Sewage, Shorting, Shutdown, Signal, Skimmer, Sludge, Smoke, Solenoid, Speed, Spiral or Scroll Case, Splice, Stabilizer, Standby, Starting, Stator, Stepping, Storage, Strainer, Suction, Sump, Supply, Switch, Synchronizing, etc.
T___Tank, Temperature, Test, Thermal, Thrust Bearing, Thyratron, Tie, Time, Transducer, Transfer, Transmitter, Trip, Trouble, Trashrake, etc.
U___Unit, Unloader, Unwatering, Up, Upper, Upstream, etc.
V___Valve, Vars, Vibration, Voltage, etc.
W___Water, Watts, Winding, etc.
X___Auxiliary Device, etc.
Y___Auxiliary to Device X, Antipump Relay. etc.
Z___Auxiliary to Device Y

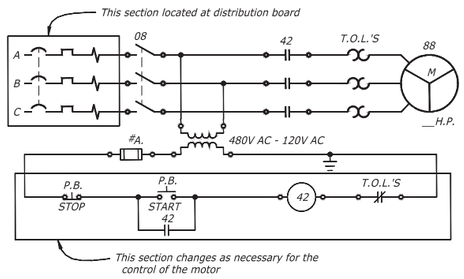

BASIC MOTOR CONTACTOR SCHEMATIC

DEVICE SYMBOLS

(SEE NOTES 5 AND 6)

- RELAY COIL, SOLENOID COIL OR CONTACTOR COIL
- INDICATING LAMP
- INDICATING METER
- RECORDING METER
- INTEGRATING METER
- TRANSFER SWITCH
- TRANSDUCER
- TELEMETRY
- TELEMETRY FOR REMOTE INDICATION
- (REC.-LOG.)
- TELEMETRY FOR REMOTE LOGGING AND/OR RECORDING
- (REC.-AGC.-LOG.)
- TELEMETRY FOR REMOTE RECORDING AND/OR LOGGING ASSOCIATED WITH AUTOMATIC GENERATION CONTROL
- MICROWAVE, TRANSMITTER-RECEIVER, FOR RELAYING (SEE NOTE 7)
- CHANNEL NO. ___
- MICROWAVE, TRANSMITTER-RECEIVER, FOR SUPERVISORY CONTROL (SEE NOTE 7)
- CHANNEL NO. ___
- MICROWAVE, TRANSMITTER-RECEIVER FOR TELEMETERING (SEE NOTE 7)
- CHANNEL NO. ___
- REMOVABLE LINK
- DEVICE TERMINAL POINT (SEE NOTE 11)
- CONTACT, NORMALLY OPEN (SEE NOTE 8)
- CONTACT, NORMALLY CLOSED (SEE NOTE 8)
- PUSHBUTTON, NORMALLY CLOSED
- PUSHBUTTON, NORMALLY OPEN
- PUSHBUTTON, MAINTAINED
- CONTACTOR WITH THERMAL OVERLOAD TRIP ELEMENT
- CONTACTOR WITH MAGNETIC TRIP ELEMENT
- THERMAL OVERLOAD DEVICE
- MAGNETIC OVERLOAD DEVICE
- THERMOMAGNETIC OVERLOAD DEVICE
- TIME DELAY MAGNETIC OVERLOAD DEVICE
- FUSE
- FUSE, CURRENT LIMITING TYPE
- RESISTOR
- RESISTOR, VARIABLE
- RESISTOR, TAPPED
- VARISTOR
- THYRISTOR OR TRIAC
- DIODE
- ZENER DIODE
- SEMI-CONDUCTOR CONTROLLED RECTIFIER (SCR)
- RESISTANCE TEMPERATURE DETECTOR (RTD)
- INSTRUMENT SHUNT
- CAPACITOR
- REACTOR
- THERMOCOUPLE
- LIGHTNING OR SURGE ARRESTER
- PROTECTIVE GAP
- HORN GAP
- CABLE TERMINATION
- BELL
- HORN
- BUZZER
- CARRIER FREQUENCY WAVE TRAP
- MECHANICAL INTERLOCK
- KEY INTERLOCK
- ELECTRICAL INTERLOCK
- REPRESENTS CONNECTION FROM EXTERNAL EQUIPMENT, DOES NOT NECESSARILY REPRESENT A TERMINAL POINT
- SYNCHRO (SELF-SYNCHRONOUS) DEVICE FOR POSITION INDICATION OR CONTROL
- THREE-PHASE, 3-WIRE, DELTA
- THREE-PHASE, BROKEN DELTA
- THREE-PHASE, OPEN DELTA
- THREE-PHASE, Y (OR STAR), UNGROUNDED
- THREE-PHASE, Y (OR STAR), WITH NEUTRAL BROUGHT OUT AND GROUNDED
- THREE-PHASE, ZIG-ZAG, UNGROUNDED
- --- SEE NOTE 9 ---
- A.C. GENERATOR, MOTOR OR CONDENSER, BASIC SYMBOL
- SQUIRREL CAGE INDUCTION MOTOR
- SLIP-RING OR WOUND ROTOR INDUCTION MOTOR
- SYNCHRONOUS GENERATOR MOTOR OR CONDENSER WITH DIRECT CURRENT FIELD EXCITATION
- SYNCHRONOUS CONVERTER
- D.C. GENERATOR, MOTOR OR CONDENSER, BASIC SYMBOL
- D.C. GENERATOR, MOTOR OR CONDENSER WITH SHUNT AND SERIES FIELD
- SPLIT FIELD MOTOR
- DIRECT CONNECTED UNITS. USE BASIC AC OR DC GENERATOR OR MOTOR SYMBOLS
- USE MANUFACTURERS DIAGRAM ROTATING AMPLIFIER
- PERMANENT MAGNET GENERATOR
- SINGLE-PHASE TWO-WINDING TRANSFORMER
- POLYPHASE TRANSFORMER
- THREE-WINDING TRANSFORMER
- AUTOTRANSFORMER OR COMPENSATOR
- CONSTANT-CURRENT TRANSFORMER
- LOAD-RATIO CONTROL TRANSFORMER WITH TAPS
- STEP-VOLTAGE REGULATOR OR LOAD-RATIO CONTROL AUTOTRANSFORMER
- CURRENT TRANSFORMER (C.T.), WOUND TYPE
- CURRENT TRANSFORMER (C.T.), BUSHING TYPE
- POTENTIAL TRANSFORMER (P.T.)
- CAPACITOR-BUSHING POTENTIAL DEVICE
- CARRIER-COUPLING CAPACITOR POTENTIAL DEVICE
- TO CARRIER EQUIPMENT
- DISCONNECTING SWITCH, HOOK-STICK-OPERATED
- DISCONNECTING SWITCH, MANUALLY-GANG-OPERATED
- AIR-BREAK SWITCH, HORN GAP, MANUALLY-GANG-OPERATED
- DISCONNECTING SWITCH, MOTOR-OPERATED
- INTERRUPTER SWITCH
- MANUALLY OPENED, ELECTRICALLY TRIPPED GROUNDING SWITCH
- FUSED DISCONNECT SWITCH
- POWER CIRCUIT BREAKER
- POWER CIRCUIT BREAKER, DRAWOUT TYPE
- AIR CIRCUIT BREAKER
- AIR CIRCUIT BREAKER, DRAWOUT TYPE
- AIR CIRCUIT BREAKER WITH ELECTRICAL TRIP
- 3-POLE CIRCUIT BREAKER WITH THERMAL-OVERLOAD DEVICE OR INVERSE-TIME-TRIP ELEMENT IN ALL 3 POLES
- 3-POLE CIRCUIT BREAKER WITH MAGNETIC-OVERLOAD DEVICE OR INSTANTANEOUS-TRIP ELEMENT IN ALL 3 POLES

NOTES

1. Select the most appropriate ANSI device function number which identifies the device used by function and the most appropriate suffix letters which further identify the device by system, subsystem, quantity or condition monitored or controlled.

   Examples: 127UC....Unit 1 Unit Control Bus Undervoltage Relay
   251EF....Unit 2 Exciter Field Time Delay Overcurrent Relay
   71WSH....Plant Sump High Water Level Switch

2. Device numbers 1 through 99 are used for the overall plant and switchyard operation. Device numbers 101 through 199, 201 through 299, 301 through 399, etc. are used for Units 1, 2, 3, etc. Device numbers prefixed by letters RE indicates devices controlled by a supervisory system.

3. No device designation shall be duplicated in the plant or switchyard. When two or more devices perform exactly the same function, the designations will be followed by a number, starting at number 1, to differentiate between the devices.

   Examples: 127UCX1, 2.....Auxiliary Relays to Device 127UC
   71WSHX1, 2, 3...Auxiliary Relays to Device 71WSH
   104UC1, 2.....Unit 1 Master Control Starting Relays

4. All schematic diagrams shall have an explanation list for devices shown on that diagram. This explanation list shall consist of a device designation with a concise description for each device and be located above the title block (e.g. See the examples in Notes 1 and 3 above).

5. This list of device symbols shows the preferred symbol to be used on Bureau of Reclamation single-line and schematic diagrams.

6. The following symbols are not part of the device symbols they are shown with, always replace these symbols by the following:

   *...Show device function numbers and letter suffixes within circle.

   ▽...Show color of lamp by the following: A-Amber, B-Blue, C-Clear, G-Green, O-Orange, R-Red, W-White.

   ■...Substitute symbol from the following list:

A - Ammeter	PH - Phase Meter
AH - Ampere-hour Meter	PI - Position Indication
CMA - Contact-making Ammeter	RF - Reactive Factor Meter
CMC - Contact-making Clock	RPM - Speed Indicator
CMV - Contact-making Voltmeter	SY - Synchroscope
DM - Demand Meter	T - Temperature Meter
ETM - Elapsed Time Meter	TS - Time Switch
F - Frequency Meter	V - Voltmeter
G - Galvanometer	VAR - Varmeter
GD - Ground Detector	VH - Varhour Meter
OHM - Ohmmeter	W - Watt Meter
OSC - Oscillograph	WH - Watthour Meter
PF - Power Factor Meter	WHDM - Watthour-demand Meter

   Use "R" in front of letters for a recording type meter.

   □....Show location to which data or information is being telemetered.

   ⬬...Show device function numbers and letter suffixes.

   ⬭...Show a descriptive note, letter, abbreviation or word to indicate when the contact opens or closes. For latching relays, selector or control switches, use the normally open contact with a letter or word indicating when the contact closes. For time delay relays use TDC or TDO for contacts. All other relay contacts do not require any descriptive note.

   △....Show TR for torque-synchro receiver or TX for torque-synchro transmitter.

   ┼....Show C, M, or G within symbol. Internal connections for A.C. machines should be shown, e.g. three phase, single phase, etc.

   ⬡.....Show S.T. for shunt trip, R.C.T. for reverse current trip, U.V. for undervoltage trip, etc.

7. Channels are via microwave or leased facilities, not via powerline carriers.

8. These contact symbols apply to the following devices: control, flow, level, limit, position, pressure, speed, and temperature switches; relays; contactors; auxiliary contacts; etc. For selector switches, always use a normally-open contact with the position(s) the contact is closed listed below contact.

9. The symbols shown before this point are used on single-line and schematic diagrams. The symbols shown after this point are used as follows: the left-hand symbols are used on single-line diagrams; the right-hand symbols are used on schematic diagrams.

10. All devices shall be shown in the nonoperated and deenergized positions, e.g. breakers shall be open; latching relays shall be in the reset position; selector switches shall be in the off position; level switches shall be in the empty container state, pressure switches shall be in the ambient pressure state; temperature switches shall be in the ambient temperature state; valves, gates, and doors shall be shown in the closed position; etc.

11. All devices, shown on schematic diagrams, shall be shown with their device terminal points numbered and/or lettered for identification of internals for wiring purposes.

12. Whenever this drawing and drawing number 104-D-757 are both referenced, the designations and symbols shown on this drawing shall take precedence over those shown on 104-D-757.

This drawing supersedes drawings 104-D-200 through 104-D-214.

ALWAYS THINK SAFETY

UNITED STATES
DEPARTMENT OF THE INTERIOR
BUREAU OF RECLAMATION
STANDARD DESIGNS

MAJOR POWER/PUMPING PLANTS
ELECTRICAL INSTALLATION
DEVICE DESIGNATIONS AND SYMBOLS TO BE USED ON SINGLE-LINE AND SCHEMATIC DIAGRAMS

REV NO		
4	2017-10-24 Patterson, James B P.E.	SHADED IN TOP OVAL FOR NOTE 6. ("SHOW DEVICE FUNCTION NUMBERS...") CLARIFIED NOTE 8 FOR SELECTOR SWITCHES
6-24-2003 D- L.G.	REVISED STANDARDS REFERENCES.	
4-4-00 D- L.G.	REDRAWN IN AUTOCAD.	
6 - 1 - 90 D- J.W.R.	ADDED LIST OF SPERCEDED DRAWINGS, NEW TITLE BLOCK AND DRAWING NUMBER IN UPPER LEFT CORNER.	

DESIGNED R.W.M. — TECHNICAL APPROVAL J. REIF
DRAWN D.D. DROUILARD — SUBMITTED H.H. VANDERPLAATS
CHECKED P.W. — APPROVED R.H. AUERBACH
CHIEF, ELECTRICAL BRANCH

CADD SYSTEM	CADD FILENAME	DATE AND TIME PLOTTED
AutoCAD Rel. 21.0s	104-D-1150-RD-1.DWG	OCTOBER 24, 2017 09:33
DENVER, COLORADO	OCTOBER 21,1983	104-D-1150

Released

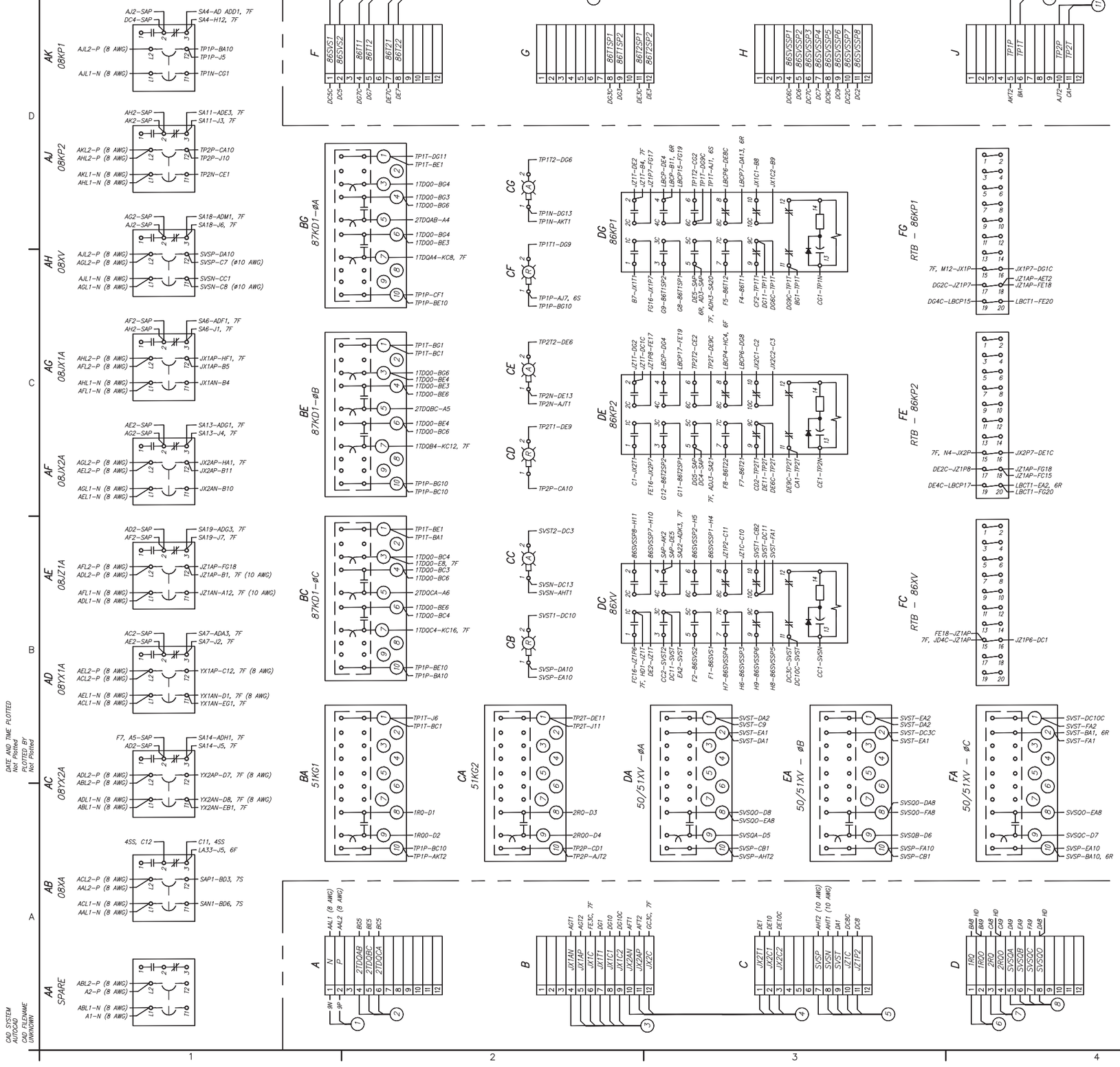

CABLE LIST

CABLE NUMBER	CABLE DESIGNATION	DESTINATION REFERENCE DRAWING	CABLE SIZE
1	9BSA–CSA7R	(6300)	2–1/C–8
2	1JX1A–CSA7R	(6121)	1–5/C–10
3	1CSA7R–JX1A	(6121)	1–9/C–10
4	2CSA7R–JX2A	(6230)	1–9/C–10
5	3CSA7R–JZ1A	(6249)	1–12/C–10
6	1KX1A–CSA7R	(6097)	1–3/C–10
7	1KX2A–CSA7R	(6201)	1–3/C–10
8	1JX1A–CSA7R	(6249)	1–5/C–10
9	4CSA7R–RTU	(6599)	1–12/C–16
10	5CSA7R–KX1A	(6097)	1–5/C–10
11	6CSA7R–KX2A	(6201)	1–5/C–10

EXPLANATION

POINT–TO–POINT WIRING DIAGRAMS

A. Double letters in bold face, such as AA, indicate the location of each device on the wiring diagram except for terminal blocks.

B. Single letters in bold face, such as A, indicate the location of each terminal block on the wiring diagram.

C. A control board is made of many sections which in turn are made of different panels. The sections are designated numerically 1 through "n" with "n" being the last section of the control board. The different panels are designated alphabetically as follows:
1. F – Indicates the front panel.
2. R – Indicates the rear panel.
3. S – Indicates the swing panel when there is only one swing panel per section.
4. FS and RS – Indicate the front and the rear swing panels, respectively, when there are two swing panels per section.
5. SS – Indicates the shipping split terminal block panel/section location.

D. All point–to–point wiring diagrams shall be drawn as follows:
1. All devices shown on the drawing shall represent the relative physical location of the devices.
2. Circuit (wire) designations shall be located next to the device stud (pin).
3. The circuit (wire) termination point shall be placed second from the device stud with a hyphen between the circuit designation and the circuit termination point.
4. The panel destination (number) of the wire shall be placed in the last position from the device stud with a comma between the circuit termination point and the panel destination. All panel wiring within the same panel will not require a panel destination.
5. Therefore, an example of point–to–point wiring is "LBCP4–HC4, 6F" which is located at device, DE, stud 8 on this drawing. The circuit (wire) designation is LBCP4. The circuit (wire) termination point is at device HC, stud (pin) number 4, located on the front panel of section 6.

NOTES

1. All cable shields and spare conductors shall be connected to the ground bus.

2. An internal wiring diagram of each type of protective relay, except lockout relays, shall be shown on a separate drawing. All other devices, including lockout relays, shall have their internal wiring diagrams shown on their external point–to–point wiring diagrams.

3. Do not edit the lineweights or text styles in this drawing. Only use text styles that are used in this drawing.

4. Do not explode or burst the titleblock. Contractor to edit titleblock information for each drawing based on information provided by Government. The titleblock information includes Subfeature, Contents, Details, and Drawing Number. Obtain latest version of Government titleblock and standards prior to commencing with Government Format Drawings.

5. The space below the Reclamation Logo at the top right side of the titleblock is reserved for manufacturer's information. At a minimum, include the following information in the space provided: Manufacturer's name, address, phone number, date, and solicitation number. Use Government provided block.

REFERENCE DRAWINGS

MAIN CONTROL BOARD CSA – PANEL 6R WIRING DIAGRAM . . . . . XXX–X–XXXXX
MAIN CONTROL BOARD CSA – PANEL 6F WIRING DIAGRAM . . . . . XXX–X–XXXXX
MAIN CONTROL BOARD CSA – PANEL 7F WIRING DIAGRAM . . . . . XXX–X–XXXXX
MAIN CONTROL BOARD CSA – PANEL 7S WIRING DIAGRAM . . . . . XXX–X–XXXXX

RECLAMATION
Managing Water in the West

Manufacturer Information
Name:
Address:
Phone:
Date:
Solicitation Number:
Other Info:

ALWAYS THINK SAFETY

U.S. DEPARTMENT OF THE INTERIOR
BUREAU OF RECLAMATION
DESIGN, DATA (ELECTRICAL)
COLORADO

DESIGN DATA TYPICAL
POWERPLANT_PUMPING PLANT
ELECTRICAL INSTALLATION

REV. NO.		
3	2016–04–01	Mendlin, Eric T P.E.
2	2000–04–03	LG
1	1991–03–01	JWR

D REVISED TO NEW DRAFTING STANDARDS.
D REDRAWN IN AUTOCAD.
D REVISED TO NEW DRAFTING STANDARDS.

R.W MC AFEE — DESIGNED
M.F. JOJOLA — DRAWN
R.W MC AFEE — CHECKED
G.D. OSBURN — TECH. APPR.
F.W. COOK, SR — APPROVED
ADMIN APPROVAL – CHIEF, ELECTRICAL BRANCH
D 1990–12–20

MAIN CONTROL BOARD
CSA – PANEL 7R

WIRING DIAGRAM

104–D–1165

SHEET 1

DATE AND TIME PLOTTED
Not Plotted
PLOTTED BY
Not Plotted

CAD SYSTEM
AUTOCAD
CAD FILENAME
UNKNOWN