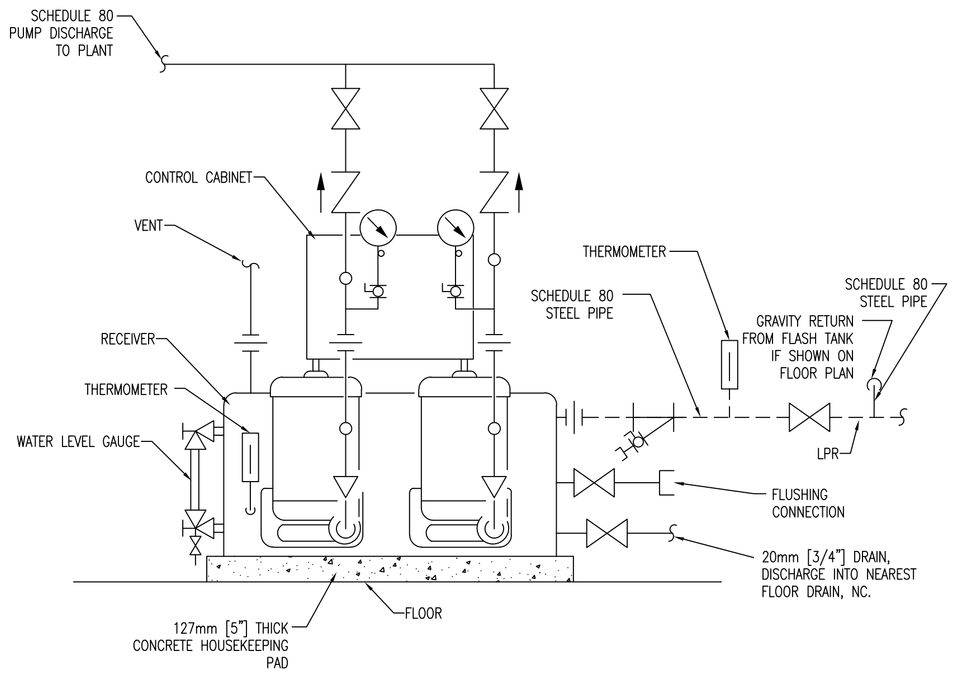

CONDENSATE PUMPS - PIPING CONNECTIONS

NTS

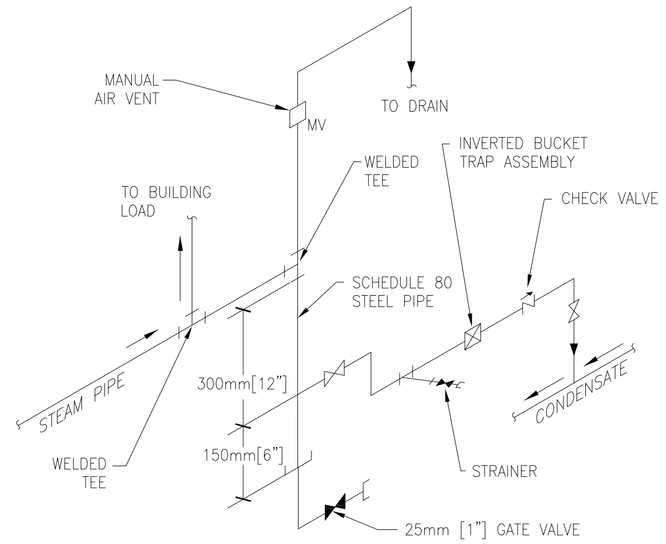

END OF STEAM LINE DRIP TRAP

NTS

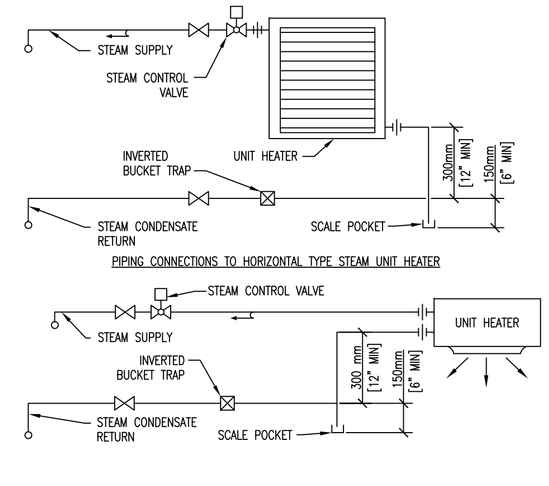

UNIT HEATERS (STEAM) PIPING CONNECTIONS

NTS

NOTE:
UNIT MOUNTED THERMOSTAT SHALL MAINTAIN SPACE TEMPERATURE AS INDICATED IN CONTROL SEQUENCE OR HVAC CONTROL DRAWINGS.

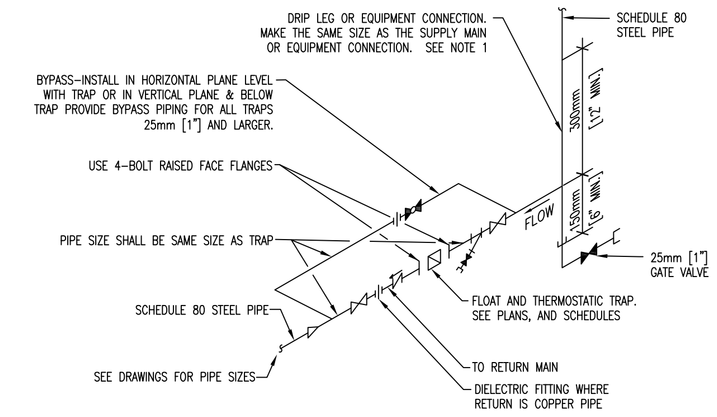

FLOAT AND THERMOSTATIC STEAM TRAP ASSEMBLY

NTS

NOTE:
ALL DRIP POINTS ON STEAM MAINS SHALL BE PROVIDED WITH A 300mm [12"] MINIMUM HIGH DRIP LEG FROM BOTTOM OF STEAM MAIN TO TRAP INLET. DRIP LEG SHALL HAVE 150mm [6"] SCALE POCKET BELOW TRAP INLET.

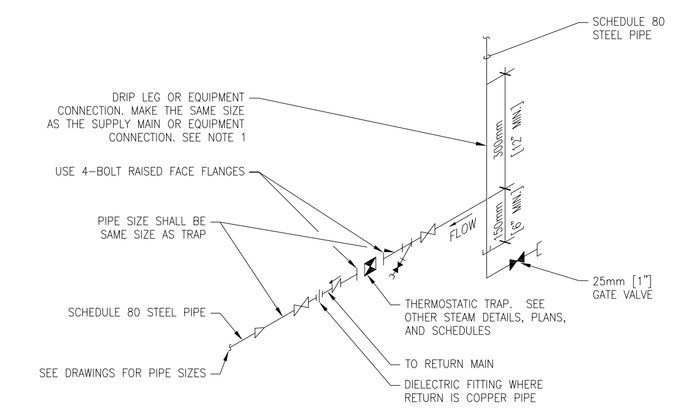

THERMOSTATIC STEAM TRAP ASSEMBLY

NTS

NOTE:
1. ALL DRIP POINTS ON STEAM MAINS SHALL BE PROVIDED WITH A 300mm [12"] MINIMUM HIGH DRIP LEG FROM BOTTOM OF STEAM MAIN TO TRAP INLET. DRIP LEG SHALL HAVE 150mm [6"] SCALE POCKET BELOW TRAP INLET.

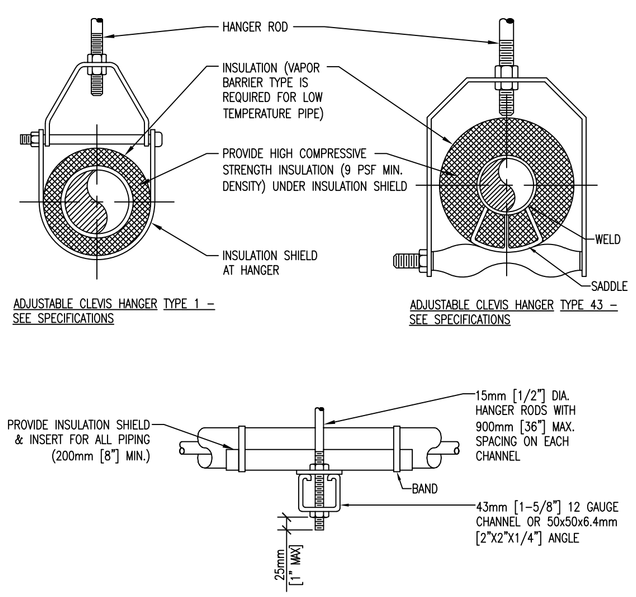

MAXIMUM PIPE/TUBING SUPPORT SPACING																			
NOM. SIZE	mm [IN]	THRU 20 [THRU ¾]	25 [1]	32 [1¼]	40 [1½]	50 [2]	65 [2½]	75 [3]	100 [4]	125 [5]	150 [6]	200 [8]	250 [10]	300 [12]	350 [14]	400 [16]	450 [18]	500 [20]	600 [24]
PIPE	mm [FT]	2100 [7]	2100 [7]	2100 [7]	2700 [9]	3000 [10]	3400 [11]	3700 [12]	4100 [14]	4900 [16]	5200 [17]	5800 [19]	6700 [22]	7000 [23]	7600 [25]	8200 [27]	8500 [28]	9100 [30]	9600 [32]
TUBING	mm [FT]	1500 [5]	1800 [6]	2100 [7]	2400 [8]	2400 [8]	2700 [9]	3000 [10]	3700 [12]	4000 [13]	4100 [14]	4900 [16]	–	–	–	–	–	–	–
NOTE: FOR TRAPEZE HANGER TAKE SPACING OF SMALLEST SIZE ON TRAPEZE.																			

PIPE HANGERS

NTS

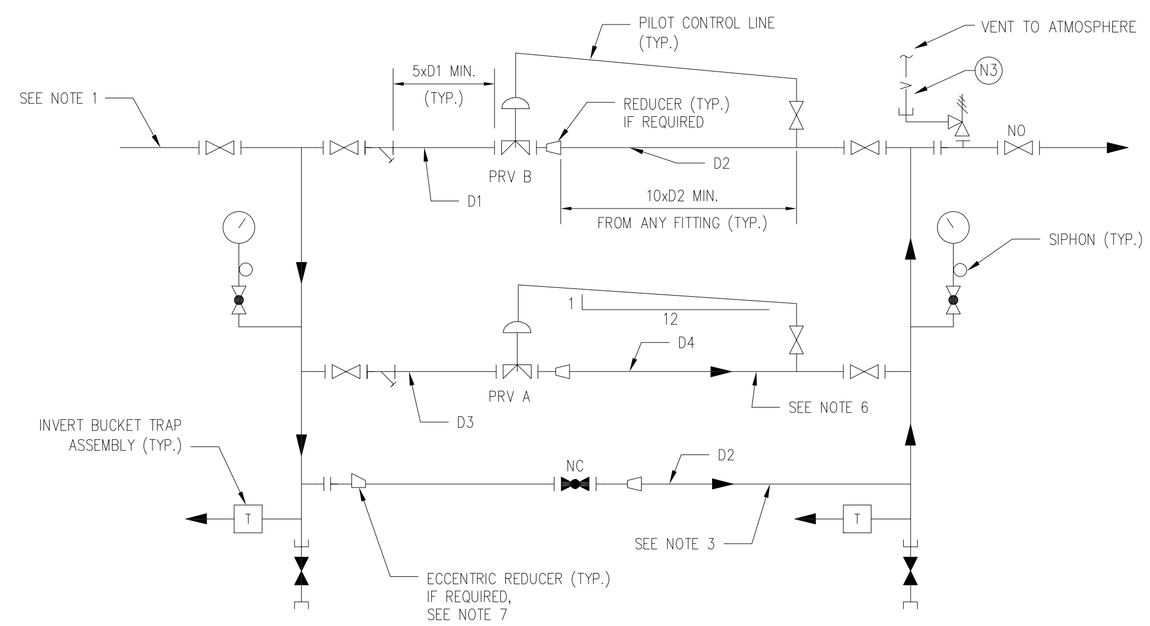

STEAM PRESSURE REDUCING STATION DOUBLE VALVE (1/3 AND 2/3)

NTS

NOTES:
1. SEE FLOOR PLANS FOR PIPE SIZES.
2. SEE EQUIPMENT SCHEDULES FOR VALVE DATA AND PIPE SIZES. INSTALL VALVES AS RECOMMENDED BY MANUFACTURER.
3. BYPASS WILL BE SIZED TO MEET THE CAPACITY OF THE COMBINED CAPACITY OF THE TWO PRV'S.
4. PROVIDE NECESSARY UNIONS FOR THE REMOVAL OF VALVE WITH THREADED CONNECTIONS.
5. SLOPE PILOT CONTROL LINE FROM THE PRESSURE REDUCING VALVE TO DOWNSTREAM STEAM PIPING. MIN SLOPE WILL BE 25mm/300mm (1"/12").
6. PROVIDE MINIMUM 5 PIPE DIAMETERS STRAIGHT PIPE UPSTREAM AND MINIMUM 10 PIPE DIAMETER STRAIGHT PIPE DOWNSTREAM OF ALL PRV'S.
7. ALL UPSTREAM REDUCERS WILL BE ECCENTRIC IF REQUIRED.

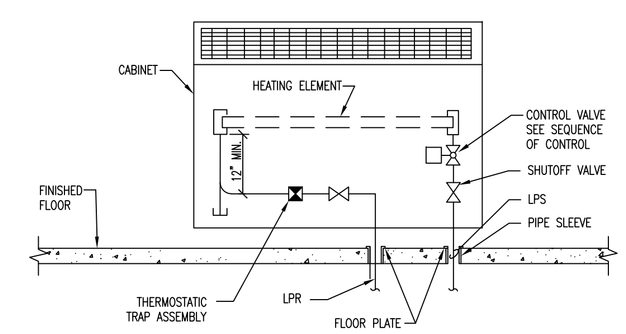

CONVECTOR-STEAM PIPING CONNECTION

NTS

Revisions	Date

Drawing Title	DETAILS
Approved:	
Approved:	
Project Title	HVAC MODIFICATIONS BUILDINGS 12 AND 15
Building Number	
Checked	
Drawn	KJU
Location	VAMC COATESVILLE
Date	
Project No.	542-26-107
Drawing No.	MEP-1

VAMC, COATESVILLE

Department of Veterans Affairs

VA FORM 08-6231, OCT 1978