RICHMOND NATIONAL BATTLEFIELD PARK
REPLACEMENT OF HVAC SYSTEMS

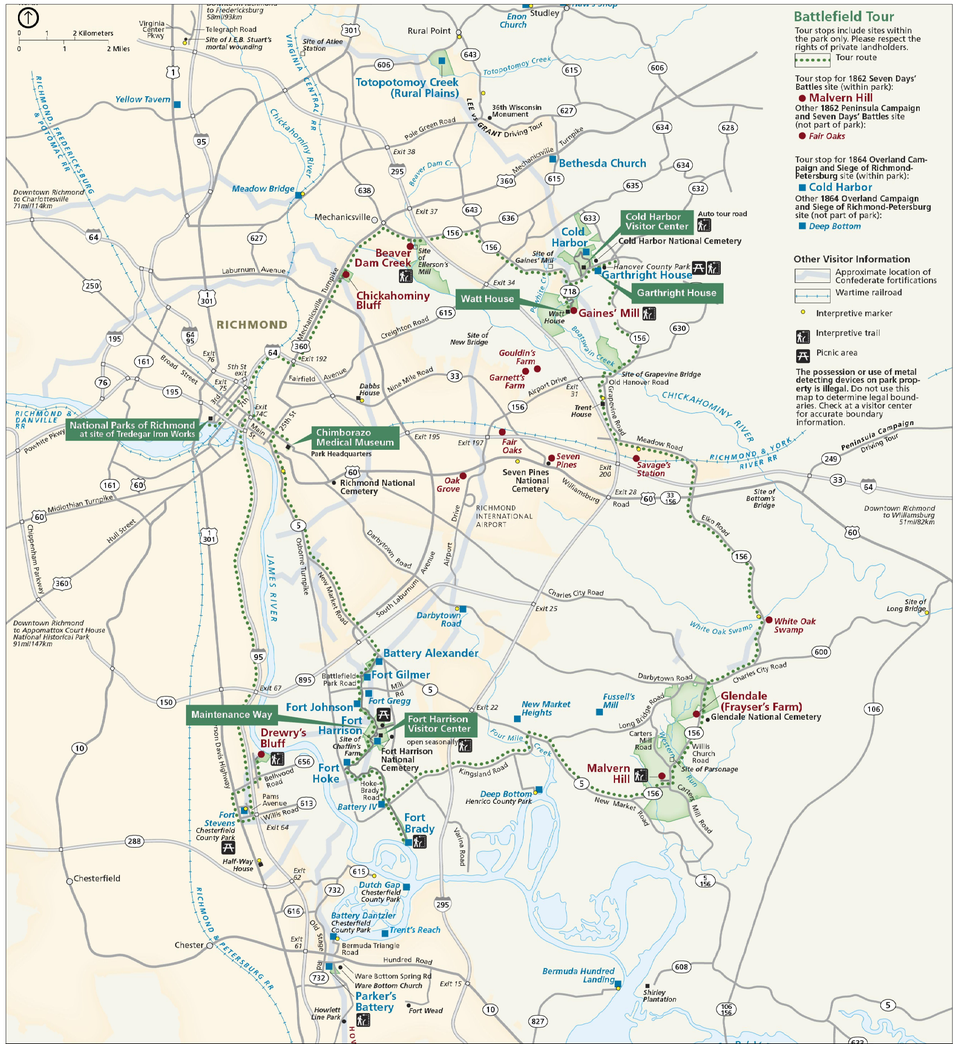
Battlefield Tour
Tour stops include sites within the park only. Please respect the rights of private landholders.
Tour route
Tour stop for 1862 Seven Days' Battles site (within park):
Malvern Hill
Other 1862 Peninsula Campaign and Seven Days' Battles site (not part of park):
Fair Oaks
Tour stop for 1864 Overland Campaign and Siege of Richmond-Petersburg site (within park):
Cold Harbor
Other 1864 Overland Campaign and Siege of Richmond-Petersburg site (not part of park):
Deep Bottom
Other Visitor Information
Approximate location of Confederate fortifications
Wartime railroad
Interpretive marker
Interpretive trail
Picnic area
The possession or use of metal detecting devices on park property is illegal. Do not use this map to determine legal boundaries. Check at a visitor center for accurate boundary information.
RICHMOND
Totopotomoy Creek (Rural Plains)
Bethesda Church
Cold Harbor
Cold Harbor Visitor Center
Cold Harbor National Cemetery
Garthright House
Gaines' Mill
Watt House
Beaver Dam Creek
Chickahominy Bluff
Meadow Bridge
Yellow Tavern
National Parks of Richmond at site of Tredegar Iron Works
Chimborazo Medical Museum
Park Headquarters
Richmond National Cemetery
Fair Oaks
Seven Pines
Seven Pines National Cemetery
Savage's Station
Oak Grove
Battery Alexander
Fort Gilmer
Fort Johnson
Fort Harrison
Fort Harrison Visitor Center
Fort Harrison National Cemetery
Maintenance Way
Drewry's Bluff
Fort Hoke
Fort Brady
Malvern Hill
Glendale (Frayser's Farm)
Glendale National Cemetery
Deep Bottom
Henrico County Park
Bermuda Hundred Landing
Parker's Battery
Fort Stevens
Chesterfield County Park
Chesterfield
Chester
Darbytown Road
White Oak Swamp
New Market Heights
Fussell's Mill
Dutch Gap
Battery Dantzler
Trent's Reach
Fort Wead
Shirley Plantation
Site of Long Bridge
Site of Bottom's Bridge
Site of Grapevine Bridge
Site of New Bridge
Site of Atlee Station
Site of J.E.B. Stuart's mortal wounding
Telegraph Road
Rural Point
Studley
Enon Church
Mechanicsville
Beaver Dam Creek
Chickahominy River
James River
Appomattox River
Bermuda Hundred
Hopewell
Petersburg
Colonial Heritage Park
Downtown Richmond to Fredericksburg 58mi/93km
Downtown Richmond to Charlottesville 71mi/114km
Downtown Richmond to Appomattox Court House National Historical Park 91mi/147km
Downtown Richmond to Williamsburg 51mi/82km
Pamunkey Campaign Driving Tour
Peninsula Campaign Driving Tour
Seven Days' Battles Driving Tour
Lee & Grant Driving Tour
Richmond National Battlefield Park
Richmond Regional Airport
Richmond Regional Airport
Richmond, Fredericksburg & Potomac RR
Richmond & Danville RR
Richmond & York River RR
Richmond & Petersburg RR
Chickahominy River RR
Virginia Central RR
James River RR
Chesapeake & Ohio RR
Chesapeake & Ohio Canal
Chesapeake & Ohio Canal National Historical Park
Chesapeake & Ohio Canal National Historical Park
Chesapeake & Ohio Canal National Historical Park

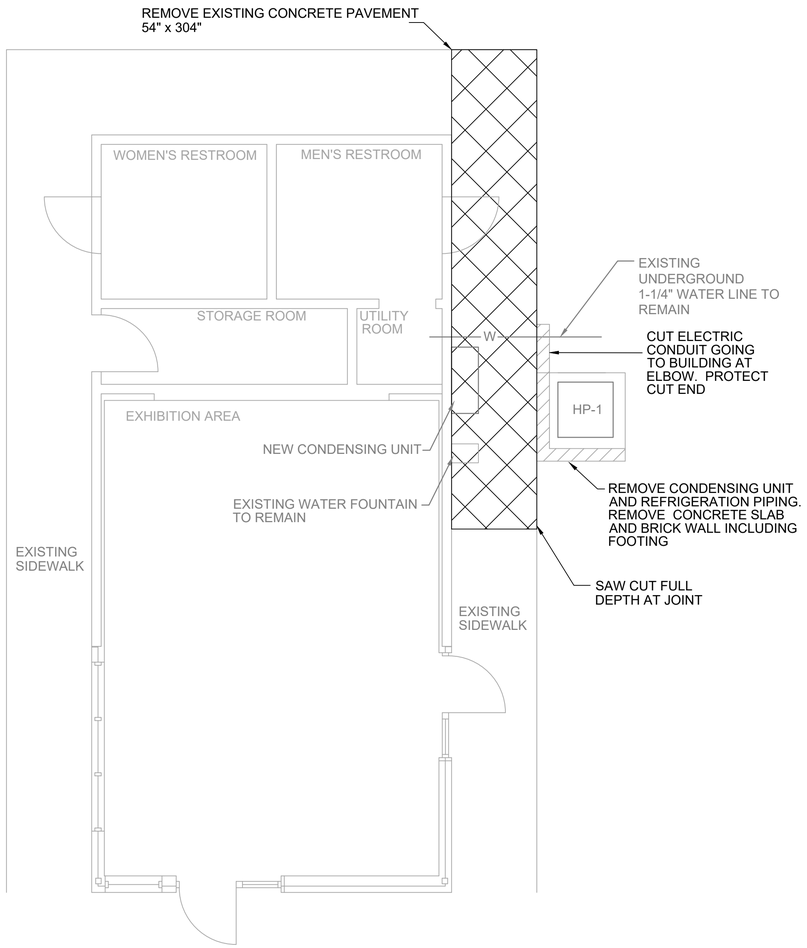

NOTE:

AFTER REMOVING WALL, BACKFILL EXCAVATION WITH BASE MATERIAL PLACED AND COMPACTED IN 12" LIFTS. DO NOT BACKFILL WITH EXCAVATED SOIL.

1 DEMOLITION PLAN

1/4" = 1'-0"

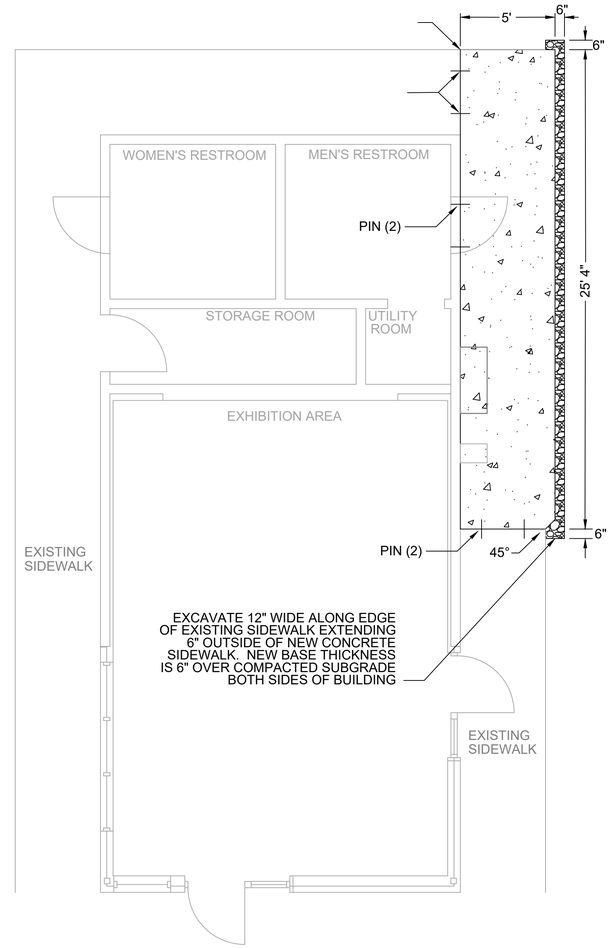

NOTE:

NEW CONCRETE SHALL CONTAIN 6 x 6 10/10 WELDED WIRE MESH PLACED ON PLASTIC CHAIRS IN THE MIDDLE OF SLAB. ROLLED MESH WILL NOT BE ACCEPTED.

PINS SHALL BE 3/8" SMOOTH STEEL GREASED OR SLEEVED ON ONE END.

2 NEW WORK PLAN

1/4" = 1'-0"

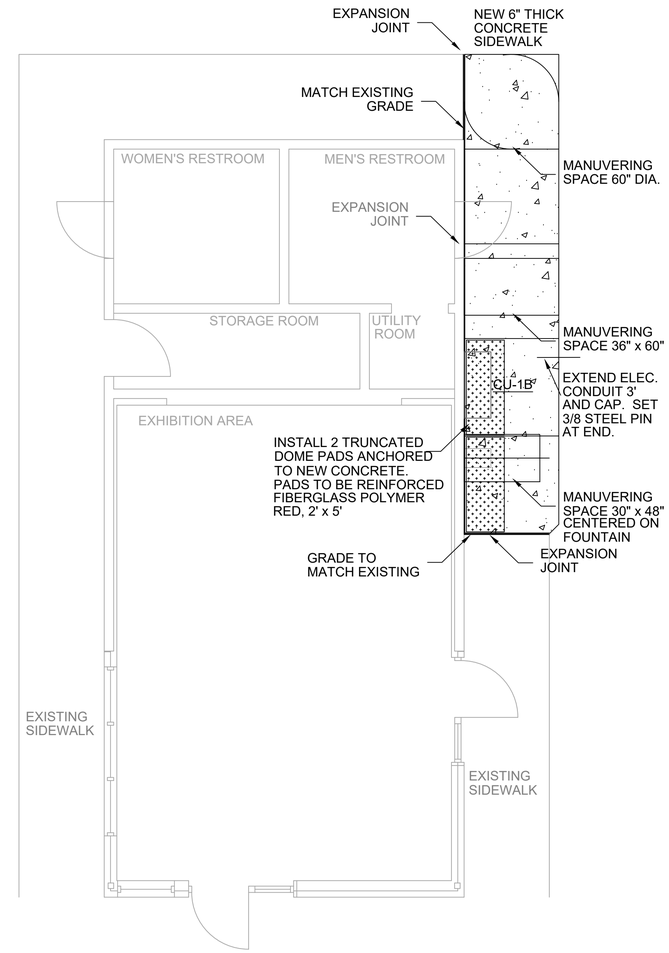

NOTE:

NEW SIDEWALK GRADE TO MATCH ADJACENT SIDEWALK AND DOOR THRESHOLDS INTO RESTROOMS. GRADE OF SIDEWALK AT DRINKING FOUNTAIN SHALL BE EXACTLY 27" BELOW BOTTOM OF DRINKING FOUNTAIN.

EDGES OF NEW SIDEWALK SHALL BE BACKED UP WITH TOPSOIL. OTHER AREAS DAMAGED BY CONSTRUCTION TO BE TOPSOILED AND REPAIRED. FINE GRADE TOPSOIL AND SEED, FERTILIZE, AND MULCH.

3 MATERIALS PLAN

1/4" = 1'-0"

DESIGNED: ELS CADD ELS TECH. REVIEW: HACE DATE: APRIL 2025	SUB SHEET NO. L1.1	TITLE OF SHEET LANDSCAPE PLAN COLD HARBOR VISITOR CENTER REPLACEMENT OF HVAC SYSTEMS RICHMOND NATIONAL BATTLEFIELD PARK 3215 E. BROAD STREET, RICHMOND, VA 23223	DRAWING NO. 367 PMIS/PKG NO. 313918 SHEET 2 OF 20

GENERIC HVAC ABBREVIATIONS

°F	DEGREES FAHRENHEIT
°C	DEGREES CELSIUS
Ø	DIAMETER
ACV	AUTOMATIC CONTROL VALVE
AD	ACCESS DOOR
ADJ	ADJUSTABLE
ADDL	ADDITIONAL
AFF	ABOVE FINISHED FLOOR
AFG	ABOVE FINISHED GRADE
ALT	ALTERNATE
ALUM	ALUMINUM
AP	ACCESS PANEL
ARCH	ARCHITECT
ATC	AUTOMATIC TEMPERATURE CONTROL
ATV	ATMOSPHERIC VENT
AVG	AVERAGE
BAS	BUILDING AUTOMATION SYSTEM
BBD	BOILER BLOW DOWN
BDT	BLOWDOWN TANK
BF	BOILER FEED WATER
BFF	BELOW FINISHED FLOOR
BHP	BRAKE HORSEPOWER
BLDG	BUILDING
BLR	BOILER
BOD	BOTTOM OF DUCT
BOP	BOTTOM OF PIPE
BOT	BOTTOM
BSMT	BASEMENT
BTU	BRITISH THERMAL UNIT
BTUH	BRITISH THERMAL UNIT PER HOUR
C	CONVECTOR
CA	COMPRESSED AIR
CF	CEILING FAN
CL	CENTERLINE
CLG	CEILING
CO	CLEAN-OUT
COL	COLUMN
COMP	COMPRESSOR
CONC	CONCRETE
CONN	CONNECTION
CONTR	CONTRACTOR
CORR	CORRIDOR
CUF	CUBIC FEET
CUH	CABINET UNIT HEATER
CYL	CYLINDER
CRCU	COLD ROOM CONDENSING UNIT
D	DRAIN
DB	DRY BULB TEMPERATURE
DC	DRY COOLER
DDC	DIRECT DIGITAL CONTROL
DDCFP	DIRECT DIGITAL CONTROL FIELD PANEL
DIA	DIAMETER
DIM	DIMENSION
DN	DOWN
DWG	DRAWING
EA	EACH
EAT	ENTERING AIR TEMPERATURE
EFF	EFFICIENCY
ECUH	ELECTRIC CABINET UNIT HEATER
ELEC	ELECTRICAL
ELEV	ELEVATION
EMER	EMERGENCY
EMS	ENERGY MANAGEMENT SYSTEM
ENT	ENTERING
EQUIP	EQUIPMENT
EUH	ELECTRIC UNIT HEATER
EXH	EXHAUST
EXP	EXPANSION
FAS	FIRE ALARM SYSTEM
FOB	FLAT ON BOTTOM
FOT	FLAT ON TOP
FTR	FINNED TUBE RADIATION
FCV	FLOW CONTROL VALVE
FFOP	FIREFIGHTERS OVERRIDE PANEL
FG	FIBERGLASS
FLEX	FLEXIBLE
FLR	FLOOR
FLRDR	FLOOR DRAIN
FP	FIRE PROTECTION
FPM	FEET PER MINUTE
FT	FEET
FT/SEC	FEET PER SECOND
FURN	FURNISHED
FVNR	FULL VOLTAGE NON-REVERSING
G	GAS
GA	GAUGE
GAL	GALLONS
GALV	GALVANIZED
GC	GENERAL CONTRACTOR
GND	GROUND
GPH	GALLONS PER HOUR
GPM	GALLONS PER MINUTE
GRD	GRADE (GROUND LEVEL)
GWB	GYPSUM WALL BOARD
H	HEIGHT
HCPD	HANDICAPPED
HD	HEAD
HP	HORSEPOWER
HPG	HIGH PRESSURE GAS
HR	HOUR
HZ	HERTZ
HX	HEAT EXCHANGER

HR	HOUR
HZ	HERTZ
HX	HEAT EXCHANGER
ID	INSIDE DIAMETER
IN	INCHES
INSUL	INSULATION
KW	KILOWATT
KVA	KILOVOLT AMPERE
L	LENGTH
LB	POUND
LAB	LABORATORY
LF	LINEAR FEET
LVG	LEAVING
M	ONE THOUSAND
MAX	MAXIMUM
MBH	THOUSAND BRITISH THERMAL UNITS PER HOUR
MCA	MINIMUM CIRCUIT AMPS
MCC	MOTOR CONTROL CENTER
MECH	MECHANICAL
MEZZ	MEZZANINE
MFR	MANUFACTURER
MH	MANHOLE
MIN	MINIMUM
MTD	MOUNTED
MU	MAKEUP WATER
N/A	NOT APPLICABLE
NC	NORMALLY CLOSED
NC	NOISE CRITERIA
NIC	NOT IN CONTRACT
NO	NORMALLY OPEN
NO.	NUMBER
NOM	NOMINAL
NTS	NOT TO SCALE
OB	OCTAVE BAND
OC	ON CENTER
OD	OUTSIDE DIAMETER
ODP	OPEN DRIP PROOF
OFCI	OWNER FURNISHED CONTRACTOR INSTALLED
OFOI	OWNER FURNISHED OWNER INSTALLED
OV	OUTLET VELOCITY
P	PERIMETER HEAT
PCF	POUNDS PER CUBIC FOOT
PD	PRESSURE DROP
PH	PHASE
PLBG	PLUMBING
POS	PROVIDED BY OTHER SECTION(S)
PRESS	PRESSURE
PR	PRESSURE REFERENCE
PRIM	PRIMARY
PSIA	POUNDS PER SQUARE INCH ABSOLUTE
PSID	POUNDS PER SQUARE INCH DIFFERENTIAL
PSIG	POUNDS PER SQUARE INCH GAUGE
PVC	POLYVINYL CHLORIDE
R	REHEAT
REP	REPRESENTATIVE
RET	RETURN
REQD	REQUIRED
REQS	REQUIREMENTS
R.H.	RELATIVE HUMIDITY
RM	ROOM
RPM	REVOLUTIONS PER MINUTE
SCH	SCHEDULE
SCHW	SECONDARY CHILLED WATER
SOV	SOLENOID OPERATED VALVE
SPECS	SPECIFICATIONS
SQ	SQUARE
SQFT	SQUARE FEET
SS	STAINLESS STEEL
STD	STANDARD
STDBY	STANDBY
STL	STEEL
SUCT	SUCTION
SUP	SUPPLY
TA	THROW-AWAY
TAV	THERMOSTATIC AIR VENT
TEFC	TOTALLY ENCLOSED FAN COOLED
TEL	TELEPHONE
TEMP	TEMPERATURE
TOD	TOP OF DUCT
TOP	TOP OF PIPE
TYP	TYPICAL
UH	UNIT HEATER
VV	SUPPLY VAV BOX
V	VENT
VEL	VELOCITY
VERT	VERTICAL
VFD	VARIABLE FREQUENCY DRIVE
VTR	VENT THROUGH ROOF
W	WIDTH
W/	WITH
W/O	WITHOUT
WB	WET BULB TEMPERATURE
WF	WIDE FLANGE
WG	WATER GAUGE
WRT	WITH RESPECT TO

ELECTRICAL NOTED

1. CONTRACT DRAWINGS AND SPECIFICATIONS ARE COMPLEMENTARY AND MUST BE USED IN CONJUNCTION TO OBTAIN COMPLETE CONSTRUCTION INFORMATION. CONTRACTOR SHALL COORDINATE ALL DRAWINGS AND SPECIFICATIONS PRIOR TO COMMENCING WORK. QUESTIONS REGARDING DESIGN INTENT OR SYSTEM OPERATION SHALL BE PROMPTLY BROUGHT TO ATTENTION OF THE COR.
2. INSTALL DEVICES AND SYSTEM WIRING TO AVOID DISTURBANCE TO HISTORIC FABRIC AND TO AVOID VISUAL INTRUSION INTO PUBLIC VISITATION AREAS. HISTORIC PRESERVATION SHALL BE TAKEN INTO ACCOUNT THROUGHOUT THE PROJECT.
3. USE EXISTING ROUTING FOR NEW FEEDERS AND BRANCH CIRCUITS WHENEVER POSSIBLE. IF A PATH IS FOUND TO BE UNTENABLE, CONFIRM NEW ROUTING WITH THE COR. WIRING SHALL BE INSTALLED WITHIN CONDUIT WHERE EXISTING PATHS INCLUDE CONDUIT.
4. USE EXISTING HOLES AND OPENINGS TO INSTALL CONDUIT AND CABLE. WHERE NO USABLE PATH EXISTS, CUT NEW HOLES. COORDINATE SIZE AND LOCATIONS OF DRILLED HOLES AND CUT OPENINGS WITH THE COR.
5. CONTRACTOR SHALL VISIT SITE AND BECOME FAMILIAR WITH THE SITE PRIOR TO SUBMITTING BID.
6. THE TERM "REMOVE" MEANS DISCONNECT AND REMOVE THE DEVICE INCLUDING OUTLETS, BRANCH CIRCUIT WIRING AND RACEWAY.
7. THE TERM “PROVIDE” MEANS FURNISH AND INSTALL, COMPLETE AND READY FOR USE.
8. THE TERM “CONTRACT DOCUMENTS” MEANS THE PROJECT MANUAL, DRAWINGS, ADDENDA, SKETCHES AND OTHER DOCUMENTATION THAT DEFINE THE WORK.
9. ANY CONFLICTS BETWEEN SPECIFICATIONS AND DRAWINGS SHALL BE PROMPTLY BROUGHT TO COR'S ATTENTION. THE CONTRACTOR SHALL NOT PROCEED WITH ANY WORK EXCEPT AT THEIR OWN RISK, UNTIL CLARIFICATIONS OF CONFLICTS ARE ISSUED TO THE CONTRACTORS BY THE COR.
10. WHERE DEVICES, WIRING, MOLDING, ETC. ARE TO BE REMOVED FROM EXISTING HISTORIC FABRIC AND REMOVAL MAY NOT BE POSSIBLE WITHOUT DAMAGING EXISTING HISTORIC FABRIC, NOTIFY COR PRIOR TO THE REMOVAL OF THE ITEM.
11. PROVIDE ENGRAVED, PHENOLIC NAMEPLATE PANELS, SAFETY SWITCHES, CABINETS, ETC, TO IDENTIFY THE UNIT AND THE SOURCE PANEL AND CIRCUIT NUMBER.
12. ALL ELECTRICAL MATERIALS SHALL BE TEMPERATURE RATED FOR 90°C.

AIR SYSTEM SPECIFIC ABBREVIATIONS

AC	AIR CONDITIONING
ACC	AIR COOLED CONDENSER UNIT
ACD	AUTOMATIC CONTROL DAMPER
AF	AIR FOIL
AHU	AIR HANDLING UNIT
ALD	ACOUSTICAL LINED DUCTWORK
ATD	AIR TERMINAL DEVICE
AVS	AIR VOLUME TRAVERSE STATION
BDD	BACKDRAFT DAMPER
BI	BACKWARD INCLINED
BC	BLOWER COIL
BSD	BIOSEAL DAMPER
CC	COOLING COIL
CD	CEILING DIFFUSER
CFM	CUBIC FEET PER MINUTE
CG	CEILING GRILLE
CREF	CHILLER ROOM EXHAUST FAN
CU	CONDENSING UNIT
DIFF	DIFFUSER
DWDI	DOUBLE WIDTH DOUBLE INLET
DWSI	DOUBLE WIDTH SINGLE INLET
DX	DIRECT EXPANSION
EF	EXHAUST FAN
EG	EXHAUST GRILLE
EHC	ELECTRICAL HEATING COIL
EHU	EXHAUST AIR HANDLING UNIT
ER	EXHAUST REGISTER
ERU	ENERGY RECOVERY UNIT
ERHC	ELECTRIC REHEAT COIL
ESP	EXTERNAL STATIC PRESSURE
F	FAN
F&B	FACE AND BYPASS
FB	FAN BOX
FC	FORWARD CURVED
FA	FREE AREA
FCU	
FD	FIRE DAMPER (W/ ACCESS DOOR)
FLTR	FILTER
FPI	FINS PER INCH
FSD	COMBINATION FIRE/SMOKE DAMPER
GE	GENERAL EXHAUST
GEF	GENERAL EXHAUST FAN
GH	GRAVITY HOOD
GWCE	GLASS WASH CENTER EXHAUST
HC	HEATING COIL
HEPA	HIGH EFFICIENCY PARTICULATE AIR FILTER
HPU	HEAT PUMP UNIT
HRU	HEAT RECOVERY UNIT
HV	HEATING & VENTILATING UNIT
HU	HUMIDIFIER

IH	INTAKE HOOD
LAT	LEAVING AIR TEMPERATURE
LD	LINEAR DIFFUSER
LUVR	LOUVER
LVDR	LOUVERED DOOR
OA	OUTSIDE AIR
OAI	OUTSIDE AIR INTAKE
OBD	OPPOSED BLADE DAMPER
OED	OPEN END DUCT
PHC	PREHEAT COIL
RA	RETURN AIR
RD	REFRIGERANT DISCHARGE (HOT GAS)
RF	RETURN FAN
RG	RETURN GRILLE
RHC	REHEAT COIL
RL	REFRIGERANT LIQUID
RLF	RELIEF
RR	RETURN REGISTER
RS	REFRIGERANT SUCTION
RV	RETURN AIR VALVE/BOX
SA	SUPPLY AIR
SATT	SOUND ATTENUATOR
SCR	SCREEN
SD	SMOKE DAMPER
SDET	SMOKE DETECTOR
SEF	SMOKE EXHAUST FAN
SF	SUPPLY FAN
SFD	COMBINATION AUTOMATIC SMOKE/FIRE DAMPER WITH ACCESS DOOR
SG	SUPPLY GRILLE
SGD	SLIDE GATE DAMPER
SM	SHEETMETAL
SP	STATIC PRESSURE
SR	SUPPLY REGISTER
SV	VARIABLE VOLUME SUPPLY AIR TERMINAL BOX
SWDI	SINGLE WIDTH DOUBLE INLET
SWSI	SINGLE WIDTH SINGLE INLET
TE	TOILET EXHAUST
TEF	DEDICATED TOILET EXHAUST FAN
TF	TRANSFER FAN
TG	TRANSFER GRILLE
TR	TRANSFER
TSP	TOTAL STATIC PRESSURE
UC	UNDERCUT DOOR
VD	VOLUME DAMPER
VV	VARIABLE VOLUME SUPPLY AIR TERMINAL BOX
VVE	VARIABLE VOLUME EXHAUST AIR TERMINAL BOX
VVR	VARIABLE VOLUME RETURN AIR TERMINAL BOX
WMS	WIRE MESH SCREEN

HYDRONIC SYSTEM SPECIFIC ABBREVIATIONS

AS	AIR SEPARATOR
AAV	AUTOMATIC AIR VENT
CH	CHILLER
CHEM	CHEMICAL FEED
CHW	CHILLED WATER
CHWR	CHILLED WATER RETURN
CHWS	CHILLED WATER SUPPLY
DOV	DRAIN OFF VALVE
ET	EXPANSION TANK
EWT	ENTERING WATER TEMPERATURE
GR	GLYCOL RETURN
GS	GLYCOL SUPPLY
GHW	GLYCOL HOT WATER
GHWR	GLYCOL HOT WATER RETURN
GHWS	GLYCOL HOT WATER SUPPLY
HB	HOSE BIBB CONN W/CHAINED CAP
HCR	HOT OR COLD WATER RETURN (DUAL TEMP)
HCS	HOT OR COLD WATER SUPPLY (DUAL TEMP)
HRC	HEAT RECOVERY COIL - GLYCOL
HW	HOT WATER
HWCUH	HOT WATER CABINET UNIT HEATER
HWHC	HOT WATER HEATING COIL
HWPHC	HOT WATER PREHEAT COIL
HWRHC	HOT WATER REHEAT COIL

HWR	HOT WATER RETURN
HWS	HOT WATER SUPPLY
HWUH	HOT WATER UNIT HEATER
LWT	LEAVING WATER TEMPERATURE
MAV	MANUAL AIR VENT
NPSH	NET POSITIVE SUCTION HEAD
OS&Y	OUTSIDE STEM AND YOKE
P	PUMP
PC	PUMPED CONDENSATE
PHX	PLATE HEAT EXCHANGER
PROCHW	PROCESS CHILLED WATER
PCHWR	PROCESS CHILLED WATER RETURN
PCHWS	PROCESS CHILLED WATER SUPPLY
RHP	RADIANT HEATING PANEL
RH	REHEAT
RHW	REHEAT HOT WATER
RHWS	REHEAT HOT WATER SUPPLY
RHWR	REHEAT HOT WATER RETURN
S(XXX)	SECONDARY (SYSTEM DEPENDENT PREFIX)
T(XXX)	TERTIARY (SYSTEM DEPENDENT PREFIX)
TDH	TOTAL DYNAMIC HEAD
UV	UNIT VENTILATOR

GENERAL NOTES

1. GENERAL NOTES, SYMBOLS LIST AND DETAILS ARE APPLICABLE TO ALL MX.XX SERIES DRAWINGS.
2. DRAWINGS ARE DIAGRAMMATIC, DETERMINE EXACT LOCATIONS OF SYSTEMS AND COMPONENTS IN FIELD.
3. COORDINATE WORK OF THIS SECTION WITH THAT OF OTHER SECTIONS.
4. REFER TO SPECIFICATIONS FOR ADDITIONAL REQUIREMENTS.
5. PROVIDE INFORMATION AND HARDWARE AS NECESSARY TO COORDINATE CONCRETE PADS AND STEEL PLATFORMS REQUIRED FOR MECHANICAL WORK.
6. COORDINATE ROOF PENETRATIONS WITH WORK OF OTHER SECTIONS AND WITH FLASHING REQUIREMENTS.
7. SHEETMETAL FITTINGS SHOWN ARE TO BE PROVIDED. NO SUBSTITUTES SHALL BE ALLOWED WITHOUT PRIOR CONSENT FROM ARCHITECT/ENGINEER.
8. REFER TO SPECIFICATIONS FOR DUCTWORK CONSTRUCTION CLASSES, SEAL, AND LEAKAGE CLASSES.
9. RUN DUCTS AND PIPING CONCEALED, UNLESS SPECIFIED OTHERWISE, AND CLEAR OF CEILING INSERTS. ALL DUCTWORK SHALL BE INSTALLED AS CLOSE AS POSSIBLE TO WALL AND UNDERSIDE OF BEAMS AND JOISTS.
10. INSTALL THERMOSTATS AT LOCATIONS SHOWN ON PLANS OR AS DIRECTED BY ARCHITECT. MOUNTING HEIGHT AFF SHALL COMPLY WITH ADA.
11. ALL WORK SHALL BE COORDINATED WITH ALL TRADES INVOLVED. OFFSETS IN PIPING AND DUCTS (INCLUDING DIVIDED DUCTS) AND TRANSITIONS AROUND OBSTRUCTIONS SHALL BE PROVIDED AT NO ADDITIONAL COST.
12. VERIFY ALL EQUIPMENT CONNECTIONS WITH MANUFACTURER'S CERTIFIED DRAWINGS. VERIFY AND PROVIDE DUCT TRANSITIONS TO FURNISHED EQUIPMENT. FIELD VERIFY AND COORDINATE ALL DIMENSIONS BEFORE FABRICATION.
13. ACCESS PANELS SHALL BE PROVIDED TO CLEAN COILS AND SERVICE DAMPERS, HEATERS, VALVES AND ALL CONCEALED MECHANICAL EQUIPMENT.
14. SUPPORT ALL EQUIPMENT, PIPING AND DUCTWORK FROM BUILDING STRUCTURE TO PROVIDE A VIBRATION FREE INSTALLATION. PROVIDE TO GC A LIST OF ALL WEIGHTS AND METHODS OF SUPPORT FOR COORDINATION. REFER TO SPECIFICATIONS FOR ADDITIONAL REQUIREMENTS.
15. SMOKE DETECTORS SHALL BE FURNISHED AND WIRED TO THE FIRE ALARM SYSTEM IN ACCORDANCE WITH DIVISION 28 SPECIFICATIONS. MOUNT THE DETECTORS IN DUCTWORK. SMOKE DETECTORS SHALL BE INSTALLED AND WIRED TO THE BAS SYSTEM AND FAN STARTERS FOR SHUTDOWN IN ACCORDANCE WITH DIVISION 23 SPECIFICATIONS.
16. SMOKE DAMPERS SHALL BE UL555S LISTED.
17. ALL CONTROL WIRE AND CONDUIT SHALL COMPLY WITH NEC, AND DIVISION 26 SPECIFICATIONS.
18. INTERNAL AIR FLOW DIMENSIONS ARE SHOWN FOR DUCTS. CONTRACTOR SHALL INCREASE SIZE FOR LINER IF APPLICABLE.
19. ALL MATERIALS AND EQUIPMENT SHALL BE NEW, OTHER THAN SPECIFIC RENTED ITEMS IDENTIFIED ON PLANS.
20. DIFFUSER SIZES SHOWN ARE NECK SIZES; REGISTER AND GRILLE SIZE ARE NOMINAL.
21. ALL CONDENSATE DRAIN LINES SHALL BE PIPED FULL SIZE OF THE UNIT DRAIN OUTLET, WITH "P" TRAP, CONNECTED TO PLUMBING AS INDICATED ON DRAWINGS.
22. PROVIDE FLEXIBLE CONNECTIONS ON ALL DUCTS CONNECTING TO FANS AND AIR HANDLING UNITS UNLESS INTERNALLY ISOLATED. ALL DUCTS TO BE GROUNDED ACROSS FLEXIBLE CONNECTION WITH FLEXIBLE COPPER GROUNDING STRAPS.
23. THE INSIDE OF DUCTWORK VISIBLE THROUGH A GRILLE OR DIFFUSER SHALL BE PAINTED FLAT BLACK.
24. INSULATE PIPING AND DUCTWORK AS SPECIFIED: PERFORM TESTS SPECIFIED BEFORE INSULATING.
25. PROVIDE HANGERS, CLAMPS, OFFSETS, EXPANSION JOINTS, ANCHORS AND GUIDES AS NECESSARY TO PREVENT STRESS ON PIPING.
26. PROVIDE VENTS AT HIGH POINTS IN PIPING SYSTEMS AND DRAIN VALVES AT LOW POINTS.
27. PROVIDE AT LEAST THREE-ELBOW SWING FOR PIPE TAKE-OFFS TO TERMINAL EQUIPMENT AND RISERS.
28. ELBOWS IN DUCT SYSTEMS SHALL BE FULL RADIUS (CENTERLINE RADIUS = 1.5 DUCT WIDTH) WHERE SPACE PERMITS. WHERE LIMITED CLEARANCE OCCURS, PROVIDE SHORT RADIUS ELBOW WITH FULL LENGTH SPLITTER VANES PER SMACNA. MITERED (SQUARE) ELBOWS WITH TURNING VANES MAY NOT BE SUBMITTED WITHOUT WRITTEN CONSENT FROM THE ARCHITECT/ENGINEER.
29. ISOLATION VALVES IN PIPING SYSTEMS ARE NOT SHOWN ON PLANS (FOR CLARITY) BUT ARE REQUIRED AT ALL PIPE BRANCHES AND CONNECTIONS TO EQUIPMENT REFER TO DETAIL SHEETS AND FLOW DIAGRAMS.
30. PITCH PIPING 1 INCH IN 20 FEET MINIMUM IN DIRECTION OF FLOW, TO ALLOW FOR DRAINING
31. MANUAL DAMPERS ARE NOT SHOWN ON THE DRAWINGS IN ORDER FOR DRAWING CLARITY. PROVIDE MANUAL ADJUSTABLE DAMPERS ON EACH LOW PRESSURE SUPPLY, RETURN, AND EXHAUST DUCT TAKE OFF, AND AT EACH TAKE OFF TO REGISTERS, GRILLES AND DIFFUSERS.
32. PROVIDE CEILING ACCESS PANELS BELOW ALL EQUIPMENT LOCATED ABOVE CEILINGS. EXACT SIZE AND LOCATION SHALL BE COORDINATED IN FIELD WITH ARCHITECT.

DEMOLITION NOTED

1. REFER TO ALL DRAWINGS SPECIFICATION FOR GENERAL DESCRIPTION OF AREAS REQUIRING DEMOLITION.
2. REFER TO CONSTRUCTION MANAGER'S INSTRUCTIONS FOR ALL EXISTING EQUIPMENT AND MATERIALS THAT SHALL REMAIN THE PROPERTY OF THE OWNER.
3. ITEMS OF VALUE WHICH ARE NOT DIRECTED TO BE RETURNED TO THE OWNER, SHALL BECOME THE PROPERTY OF THE CONTRACTOR AND SHALL BE REMOVED FROM SITE AND LEGALLY DISPOSED OF. STORAGE OR SALE OF ITEMS ON THE PROJECT SITE IS PROHIBITED.
4. PROTECTION: ENSURE THE SAFE PASSAGE OF PERSONS IN AND AROUND THE BUILDING DURING DEMOLITION. PREVENT INJURY TO PERSONS AND DAMAGE TO PROPERTY. PROVIDE ADEQUATE SHORING AND BRACING TO PREVENT COLLAPSE. IMMEDIATELY REPAIR DAMAGED PROPERTY TO THE CONDITION BEFORE BEING DAMAGED. TAKE EFFECTIVE MEASURES TO PREVENT WINDBLOWN DUST.
5. UTILITIES: MAINTAIN ALL UTILITIES EXCEPT THOSE REQUIRING REMOVAL OR RELOCATION. KEEP UTILITIES IN SERVICE AND PROTECT FROM DAMAGE. DO NOT INTERRUPT UTILITIES SERVING OCCUPIED AREAS WITHOUT FIRST OBTAINING PERMISSION FROM HARVARD FACILITIES. PROVIDE TEMPORARY SERVICES AS REQUIRED.
6. THESE DRAWINGS ARE DIAGRAMMATIC ONLY AND REFLECT OVERALL SYSTEM REMOVAL. NOT EVERY ITEM OR COMPONENT OF A SYSTEM IS SHOWN.
7. THIS CONTRACTOR SHALL PROVIDE SHUT DOWN OF SERVICES (BOILERS, AHU, HEAT PUMPS, PUMPS, ETC.) AND TRACING OF ALL PIPING WITHIN BASE BID.

DESIGNED: ELS	SUB SHEET NO.	TITLE OF SHEET	DRAWING NO. 367
CADD ELS	M0.1	MECHANICAL LEGEND	PMIS/PKG NO. 313918
TECH. REVIEW: HACE		REPLACEMENT OF HVAC SYSTEMS RICHMOND NATIONAL BATTLEFIELD PARK 3215 E. BROAD STREET, RICHMOND, VA 23223	SHEET 3 OF 20
DATE: APRIL 2025			

DUCTWORK

SINGLE LINE		DOUBLE LINE	SINGLE LINE		DOUBLE LINE
	ROUND SUPPLY DUCT UP			ROUND RETURN OR EXHAUST DUCT UP	
	SUPPLY DUCT UP			RETURN/EXHAUST DUCT UP	
	ROUND SUPPLY DUCT DN			RETURN/EXHAUST DUCT DOWN	
	SUPPLY DUCT DOWN			ROUND RETURN OR EXHAUST DUCT DN	
	STANDARD RADIUS ELBOW (R = W) SUPPLY/RETURN EXHAUST	R W		HORIZONTAL OFFSET SUPPLY/RETURN /EXHAUST	
	SPLIT TAKE-OFF W/ BRANCH DAMPERS SUPPLY		RISE/DROP	RISE OR DROP SUPPLY/RETURN/ EXHAUST	RISE/DROP
				90° TAKE-OFF W/BRANCH TAKE-OFF VOLUME DAMPER (VD IN LOW PRESSURE SYSTEMS ONLY)	
	BULLHEAD SPLIT SUPPLY	GOOD FOR TAKEOFF TO RING DUCT		RING DUCT	
	CEILING DUCT MTD DIFF/GRILLE W/BRANCH TAKE-OFF VOLUME DAMPER			BULLHEAD CONVERGE RETURN/EXHAUST W/BRANCH TAKE-OFF VOLUME DAMPER	
	CEILING DUCT MTD DIFF/GRILLE W/BRANCH TAKE-OFF VOLUME DAMPER			SIDEWALL DUCT MTD REGISTER/GRILLE W/BRANCH TAKE-OFF VOLUME DAMPER	
	OPEN END DUCT W/VD & 1/2"x1/2" WMS			SUPPLY SIDEWALL LINEAR DIFFUSER (W/ 1" INTERNALLY LINED SM PLENUM) BRANCH CONN W/VD FOR EVERY 4' OF LINEAR	
	FLEXIBLE DUCT			SUPPLY CEILING LINEAR DIFFUSER (W/ 1" INTERNALLY LINED SM PLENUM) BRANCH CONN W/VD FOR EVERY 4' OF LINEAR	BOOT BY LD MFR

AVS	AIR VOLUME TRAVERSE STATION WITH ACCESS DOOR
SGD	SLIDE GATE DAMPER
VD	MANUAL VOLUME DAMPER (OBD IN DIFFUSER)
ACD	AUTOMATIC CONTROL DAMPER W/ACCESS DOOR
SD	AUTOMATIC SMOKE DAMPER W/ACCESS DOOR
FSD	COMBINATION SMOKE/FIRE DAMPER W/ACCESS DOOR
BDD	BACKDRAFT DAMPER
FD	FIRE DAMPER W/ ACCESS DOOR

	OR	ROOF EXHAUST FAN SHOWN ON ROOF
	OR	ROOF EXHAUST FAN SHOWN ON FLOOR PLAN
		RETURN OR EXHAUST AIR FLOW
		SUPPLY AIR FLOW
		STANDARD 4-WAY BLOW SUPPLY DIFFUSER
		BLANKED FOR 3-WAY BLOW SUPPLY DIFFUSER
	OR	BLANKED FOR 2-WAY BLOW SUPPLY DIFFUSER
		BLANKED FOR 1-WAY BLOW SUPPLY DIFFUSER

FLOW DIAGRAM AND CONTROL DIAGRAM EQUIP SYMBOLS

	FILTER BANK		PUMP
			CENTRIFUGAL FAN
H C	HEATING COIL		INLINE CENTRIFUGAL FAN
RH C	REHEAT COIL		UPBLAST CENTRIFUGAL FAN
			ROOF FAN
C C	COOLING COIL		OPPOSED BLADE DAMPER W/ TWO POSITION ACTUATOR
			OPPOSED BLADE DAMPER W/ MODULATING ACTUATOR
	CABINET HEATER		PARALLEL BLADE DAMPER W/ TWO POSITION ACTUATOR
			PARALLEL BLADE DAMPER W/ MODULATING ACTUATOR
			BACKDRAFT DAMPER
	UNIT HEATER		AIR VALVE
VFD	VARIABLE FREQUENCY DRIVE		AIR TERMINAL BOX
AAV	AIR SEPARATOR		AIR TERMINAL BOX WITH REHEAT COIL
	EXPANSION TANK		CHEMICAL FEED SYSTEM

CALL OUT SYMBOLS

1 M.XX	SECTION DESIGNATION SHEET NUMBER	T	THERMOSTAT
		H	HUMIDISTAT
1 M.XX	DETAIL DESIGNATION SHEET NUMBER	TS	TEMPERATURE SENSOR
		MS	HUMIDITY SENSOR
1	REVISION NUMBER	TI	TEMPERATURE INDICATOR
		MI	HUMIDITY INDICATOR
	DIFFUSER, GRILLE, REGISTER LETTER DESIGNATOR	P	PRESSURE TRANSMITTER
	DESIGN CFM	SDET	SMOKE DETECTOR
A(200) (200)	ALTERNATE CFM LOCATION	C	CARBON DIOXIDE SENSOR
	REFER TO DRAWINGS ( ) FOR CONTINUATION XXX		MATCHLINE
	SYMBOL DESIGNATES ASSOCIATED SYSTEM OR SERVICE (ie HWS)	PB	PUSH BUTTON
			RF SHIELDED ROOM

EQUIPMENT TAG SYMBOLS & ABBREVIATIONS

TAG NO	EQUIPMENT NOT REQUIRING ELECTRIC SERVICE	VAV/VAVE	TERMINAL BOX
		XXX	OCCUPIED MAX CFM
		XXX	UNOCCUPIED CFM
TAG NO	EQUIPMENT REQUIRING ELECTRIC SERVICE	VAV/VAVE	TERMINAL BOX
		XXX	OCCUPIED MAX GPM

NOTE: REFER TO SCHEDULES FOR EQUIPMENT SPECIFIC DATA

PIPING LEGEND

	GATE VALVE
	BALL VALVE
	BALL VALVE WITH MEMORY STOP (BALANCING VALVE)
	BALL VALVE WITH HOSE BIBB, CAP & CHAIN (DRAIN VALVES)
	BUTTERFLY VALVE
	BUTTERFLY VALVE WITH MEMORY STOP (BALANCING VALVE)
	GLOBE VALVE
	PRESSURE REDUCING VALVE
	CHECK VALVE
	STRAINER W/BALL VALVE, HOSE BIBB & CAP (GATE VALVE FOR STEAM)
S	SOLENOID VALVE
	AUTOMATIC CONTROL VALVE, MODULATING ACTUATOR
	AUTOMATIC CONTROL VALVE, TWO POSITION ACTUATOR
	THREE WAY AUTOMATIC CONTROL VALVE, MODULATING ACTUATOR
	THREE WAY AUTOMATIC CONTROL VALVE, TWO POSITION ACTUATOR
	AUTOMATIC FLOW CONTROL VALVE (PRESSURE INDEPENDENT)
	COMBINATION FLOWMETER/SHUT OFF/BALANCING VALVE (CIRCUIT SETTER)
FM	FLOW MEASURING DEVICE
	FLOW SWITCH
	SAFETY RELIEF VALVE
	UNION OR FLANGE (AS INDICATED BY PIPE SIZE - SEE SPEC.)
	BLIND FLANGE
	END CAP
	PRESSURE GAUGE WITH GAUGE CLOCK
PT	PRESSURE/TEMPERATURE WELL
AAV	AUTOMATIC AIR VENT WITH ISOLATION VALVE
MAV	MANUAL AIR VENT
	REDUCER (ECCENTRIC-FLAT ON BOTTOM OR FLAT ON TOP)
	REDUCER (CONCENTRIC)
	FLEXIBLE CONNECTION
E	EXPANSION JOINT
	PIPE GUIDE
	ANCHOR
	RISE (SINGLE LINE - PLAN VIEW)
	DROP (SINGLE LINE - PLAN VIEW)
	VALVE IN VERTICAL
	TOP TAKEOFF
	BOTTOM TAKEOFF
	PIPE BREAK (SINGLE LINE)
W	WATER METER DIAL TYPE
	DIRT LEG
CO	CLEAN-OUT FOR CONDENSATE DRAIN
	RISE (DOUBLE LINE - PLAN VIEW)
	DROP (DOUBLE LINE - PLAN VIEW)
	PIPE BREAK (DOUBLE LINE)
	DIRECTION OF FLOW IN PIPE
UP	PITCH PIPE UP IN DIRECTION OF FLOW
DN	PITCH PIPE DOWN IN DIRECTION OF FLOW
	NEW WORK
	SUPPLY LINES
	RETURN LINES
X	PIPE ANCHOR FOR EXPANSION LOOP
	PIPE GUIDE FOR EXPANSION LOOP

DESIGNED: ELS	SUB SHEET NO.	TITLE OF SHEET	DRAWING NO. 367
CADD ELS	M0.2	MECHANICAL LEGEND	PMIS/PKG NO. 313918
TECH. REVIEW: HACE		REPLACEMENT OF HVAC SYSTEMS RICHMOND NATIONAL BATTLEFIELD PARK 3215 E. BROAD STREET, RICHMOND, VA 23223	SHEET 4 OF 20
DATE: APRIL 2025			

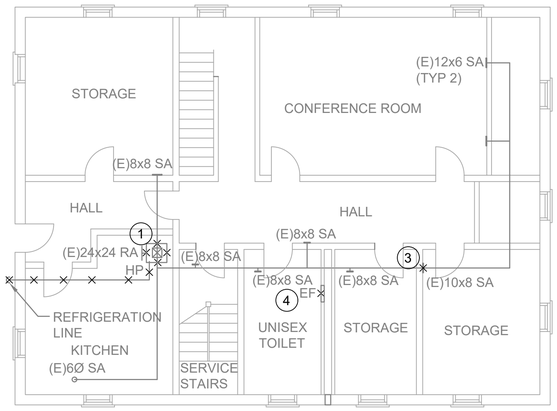

1 BASEMENT FLOOR PLAN

1/8" = 1'-0"

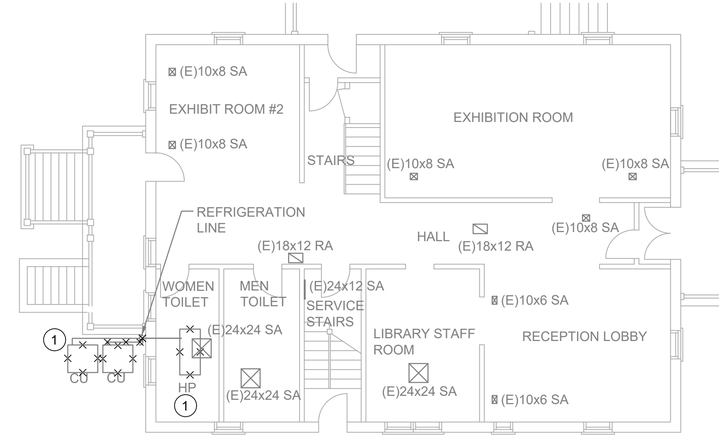

2 LEVEL1 FLOOR PLAN

1/8" = 1'-0"

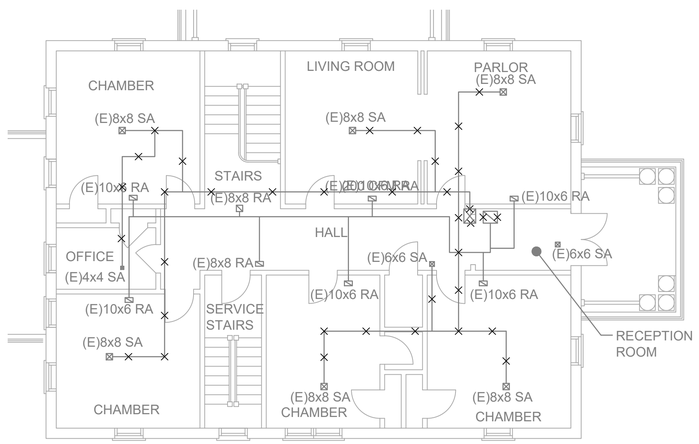

3 LEVEL 2 FLOOR PLAN

1/8" = 1'-0"

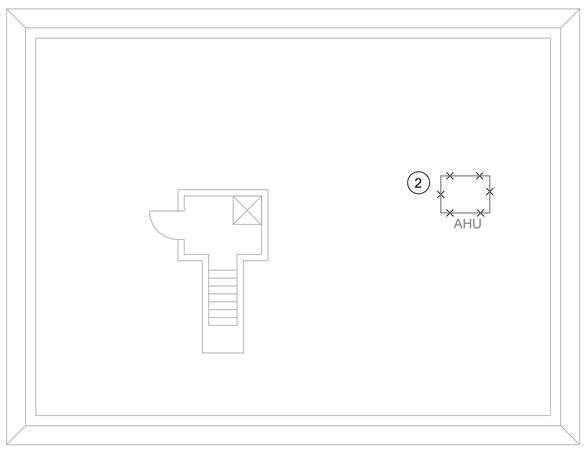

4 ROOF FLOOR PLAN

1/8" = 1'-0"

GENERAL NOTES:

1. THESE DRAWINGS ARE DIAGRAMMATIC IN NATURE AND NOT INTENDED TO SHOW ALL TRANSITIONS, OFFSETS, ETC. CONTRACTOR SHALL FIELD VERIFY EXISTING CONDITIONS AND PROVIDE ALL NECESSARY FITTINGS TO COMPLETE THE INTENT OF THE DRAWINGS. ANY DISCREPANCIES BETWEEN DRAWINGS AND FIELD CONDITIONS SHALL BE REPORTED TO THE CONTRACTING OFFICER FOR RESOLUTION. CONTRACTOR MAY LOCATE MECHANICAL EQUIPMENT DIFFERENTLY THAN SHOWN ON DRAWINGS DUE TO CONFLICTS, AS LONG AS FUNCTION AND/OR APPEARANCE ARE NOT AFFECTED.

2. ALL NEW MATERIAL, INCLUDING BUT NOT LIMITED TO DUCTWORK, PIPING, WIRING, AND HANGERS SHALL THAT PENETRATE SURFACES SHALL USE EXISTING OPENINGS WHENEVER POSSIBLE. IF NEW PENETRATIONS ARE REQUIRED OR EXISTING ONES ARE ABANDONED, USE MATERIALS THAT VISUALLY MATCH IN-PLACE ADJACENT SURFACES TO THE FULLEST EXTENT POSSIBLE. REFER TO SPECIFICATION 01 73 29 CUTTING AND PATCHING.

ELECTRICAL NOTES:

1. ALL ELECTRICAL WORK SHALL BE PERFORMED BY AN ELECTRICIAN LICENSED IN THE COMMONWEALTH OF VIRGINIA.

2. PRIOR TO THE START OF CONSTRUCTION, CONTRACTOR SHALL CONDUCT A THOROUGH ASSESSMENT OF THE EXISTING ELECTRICAL SYSTEM.ENSURE PROPOSED MECHANICAL REPLACEMENTS AND UPGRADES INTEGRATE SEAMLESSLY WITH THE CURRENT INFRASTRUCTURE. PERFORM LOAD CALCULATIONS FOR THE EXISTING ELECTRICAL SYSTEM TO ENSURE ADEQUATE POWER DISTRIBUTION. ADJUST FOR NEW LOADS OR EQUIPMENT, ENSURING THE SYSTEM CAN HANDLE THE ADDITIONAL DEMAND WITHOUT OVERLOAD.

3. ONCE EQUIPMENT AS BEEN DISCONNECTED, VERIFY THAT FEEDERS ARE DE-ENERGIZED AND DEVICES ARE OBSOLETE AND REMOVE WIRING, RACEWAY AND DEVICES. NOTIFY THE COR IF A FEEDER AND ASSOCIATED DEVICES ARE FOUND TO BE FOR EQUIPMENT THAT IS.

SCOPE OF WORK:

1. DEMOLISH HEAT PUMPS, PADS, AND REFRIGERATION LINES.
2. DEMOLISH AHU, ROOF CURB, AND 2ND FLOOR DUCTWORK THAT IS INDICATED ON PLAN.
3. DETACH FLEX DUCT AND DEMOLISH DIFFUSER.
4. DEMOLISH EXHAUST FAN IN THE BATHROOM.

DESIGNED: ELS	SUB SHEET NO.	TITLE OF SHEET	DRAWING NO. 367
CADD ELS	M1.1	MECHANICAL DEMOLITION FLOOR PLAN CHIMBORAZO VISITOR CENTER REPLACEMENT OF HVAC SYSTEMS RICHMOND NATIONAL BATTLEFIELD PARK 3215 E. BROAD STREET, RICHMOND, VA 23223	PMIS/PKG NO. 313918
TECH. REVIEW: HACE			SHEET 5 OF 20
DATE: APRIL 2025			

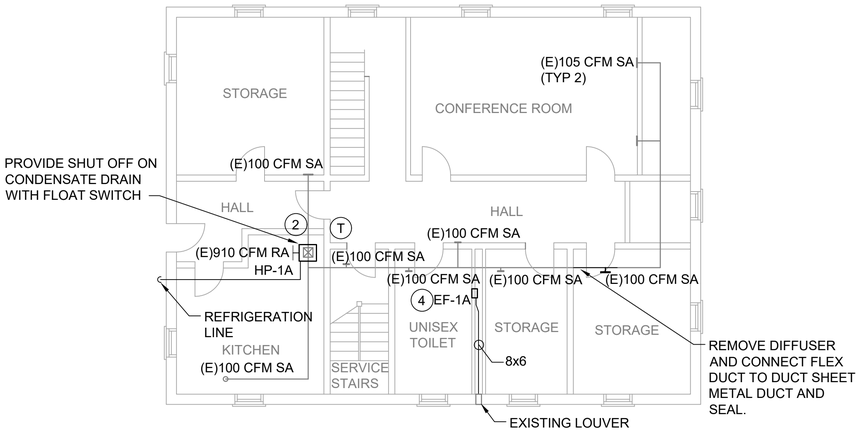

1 BASEMENT FLOOR PLAN

1/8" = 1'-0"

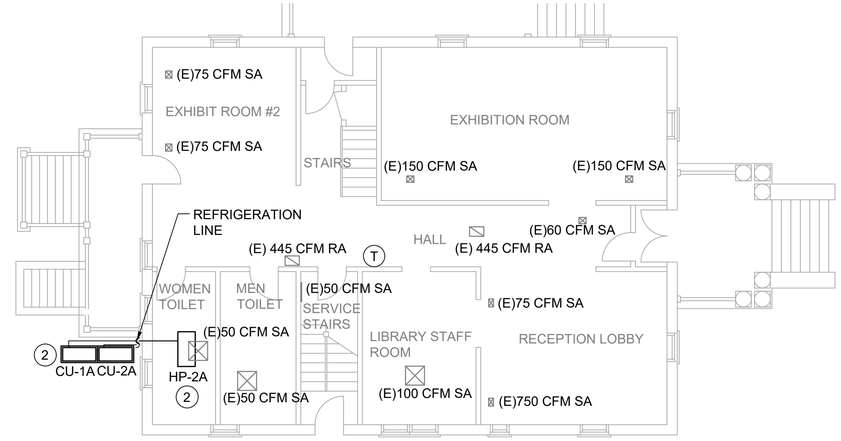

2 LEVEL1 FLOOR PLAN

1/8" = 1'-0"

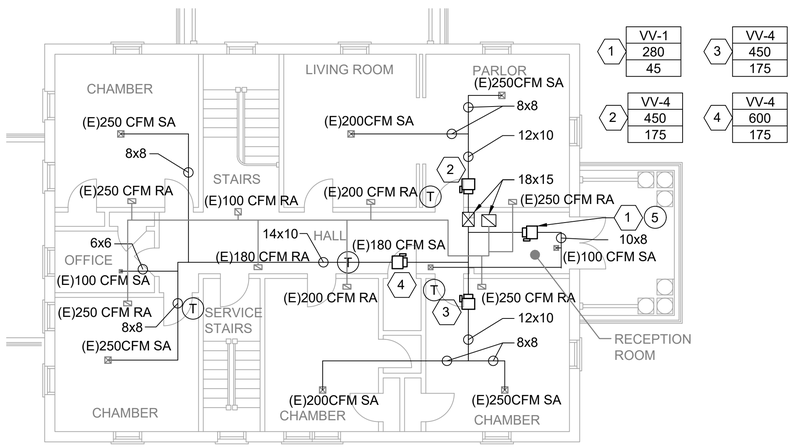

3 LEVEL 2 FLOOR PLAN

1/8" = 1'-0"

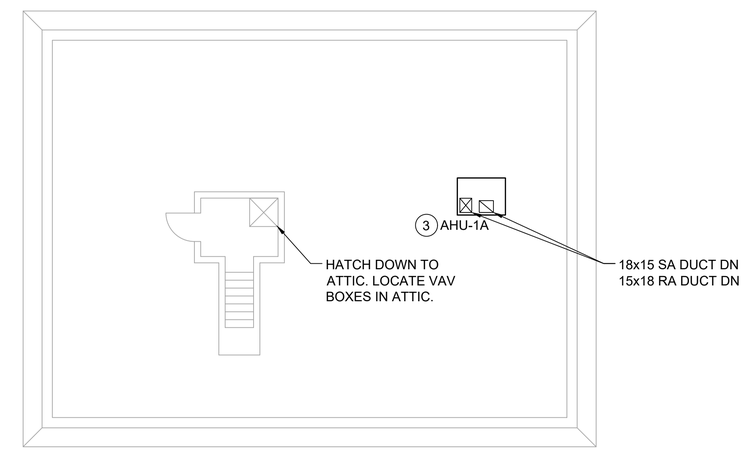

4 ROOF FLOOR PLAN

1/8" = 1'-0"

GENERAL NOTES:

1. THESE DRAWINGS ARE DIAGRAMMATIC IN NATURE AND NOT INTENDED TO SHOW ALL TRANSITIONS, OFFSETS, ETC. CONTRACTOR SHALL FIELD VERIFY EXISTING CONDITIONS AND PROVIDE ALL NECESSARY FITTINGS TO COMPLETE THE INTENT OF THE DRAWINGS. ANY DISCREPANCIES BETWEEN DRAWINGS AND FIELD CONDITIONS SHALL BE REPORTED TO THE CONTRACTING OFFICER FOR RESOLUTION. CONTRACTOR MAY LOCATE MECHANICAL EQUIPMENT DIFFERENTLY THAN SHOWN ON DRAWINGS DUE TO CONFLICTS, AS LONG AS FUNCTION AND/OR APPEARANCE ARE NOT AFFECTED.

2. ALL NEW MATERIAL, INCLUDING BUT NOT LIMITED TO DUCTWORK, PIPING, WIRING, AND HANGERS SHALL THAT PENETRATE SURFACES SHALL USE EXISTING OPENINGS WHENEVER POSSIBLE. IF NEW PENETRATIONS ARE REQUIRED OR EXISTING ONES ARE ABANDONED, USE MATERIALS THAT VISUALLY MATCH IN-PLACE ADJACENT SURFACES TO THE FULLEST EXTENT POSSIBLE. REFER TO SPECIFICATION 01 73 29 CUTTING AND PATCHING.

ELECTRICAL NOTES:

1. ALL ELECTRICAL WORK SHALL BE PERFORMED BY AN ELECTRICIAN LICENSED IN THE COMMONWEALTH OF VIRGINIA.

2. FOR EQUIPMENT BEING REPLACE IN-KIND, THE ELECTRICAL CONTRACTOR SHALL DISCONNECT POWER WIRING FROM MECHANICAL EQUIPMENT. NEATLY COIL DISCONNECTED WIRING AND STORE IN-PLACE DURING CONSTRUCTION. AFTER NEW EQUIPMENT HAS BEEN SET-IN-PLACE CONNECT EXISTING POWER WIRING TO NEW EQUIPMENT.

3. FOR ALL NEW EQUIPMENT, ELECTRICAL CONTRACTOR SHALL IDENTIFY THE POWER SOURCE, ENSURE THE PANEL HAS THE CAPACITY TO HANDLE THE ADDITIONAL LOAD. IF AN ELECTRICAL UPGRADE IS NECESSARY, NOTIFY COR. INSTALL DEDICATED CIRCUIT BREAKER AND PROPER WIRE FOR THE EQUIPMENT. RUN CONDUIT AND WIRING THROUGH EXISTING PENETRATION. INSTALL LOCAL DISCONNECT ON EQUIPMENT.

SCOPE OF WORK:

1. CLEAN ALL EXISTING DUCTWORK AND REPLACE ANY DAMAGES SHEET METAL AND INSULATION. ASSUME 10' OF NEW DUCTWORK AND INSULATION.

2. INSTALL NEW HEAT PUMPS. OUTDOOR UNITS SHALL BE ON NEW 3" PRECAST CONCRETE OR HPDE PAD . REFRIGERANT LINE SERVING HP-1A RUNS ALONGTHE GROUND TO OPENING INTO THE BASEMENT. REFRIGERANT LINE SERVING HP-2A RUNS UP THE EXTERIOR OF THE BUILDING INTO THE FIRST FLOOR. RUN NEW REFRIGERANT LINES IN EXISTING LOCATIONS. INDOOR UNITS SHALL BE INSTALLED IN EXISTING LOCATIONS. RECONNECT TO EXISTING DUCTWORK AND RUN CONDENSATION TO EXISTING DRAIN. PROVIDE NEW THERMOSTAT FOR EACH HEAT PUMP.

3. INSTALL NEW AHU ON THE EXISTING ROOF CURB. NEW AHU MATCHES THE EXISTING UNIT DIMENSIONS. RUN DUCTWORK THROUGH THE EXISTING ROOF OPENINGS.

4. REPLACE EXHAUST FAN, PROVIDE NEW DUCTWORK CONNECTING FAN TO EXISTING LOUVER. CLEAN EXISTING LOUVER.

5. INSTALL (4) VAV BOXES IN THE ATTIC, CONFIRM VAVS HAVE MANUFACTURES REQUIRED CLEARANCE.. PROVIDE NEW THERMOSTAT FOR EACH BOX.

6. BALANCE AIR SYSTEM BASED ON THE CFMS ON THE FLOOR PLAN.

7. PROVIDE TRANE CONCIERGE SYSTEM. TIE IN AHU. HEAT PUMPS, AND ALL THERMOSTATS. LOCATED CONTROLLER IN BASEMENT MECHANICAL ROOM.

DESIGNED: ELS	SUB SHEET NO.	TITLE OF SHEET	DRAWING NO. 367
CADD ELS	M1.2	MECHANICAL NEW WORK FLOOR PLAN CHIMBORAZO VISITOR CENTER REPLACEMENT OF HVAC SYSTEMS RICHMOND NATIONAL BATTLEFIELD PARK 3215 E. BROAD STREET, RICHMOND, VA 23223	PMIS/PKG NO. 313918
TECH. REVIEW: HACE			SHEET 6 OF 20
DATE: APRIL 2025			

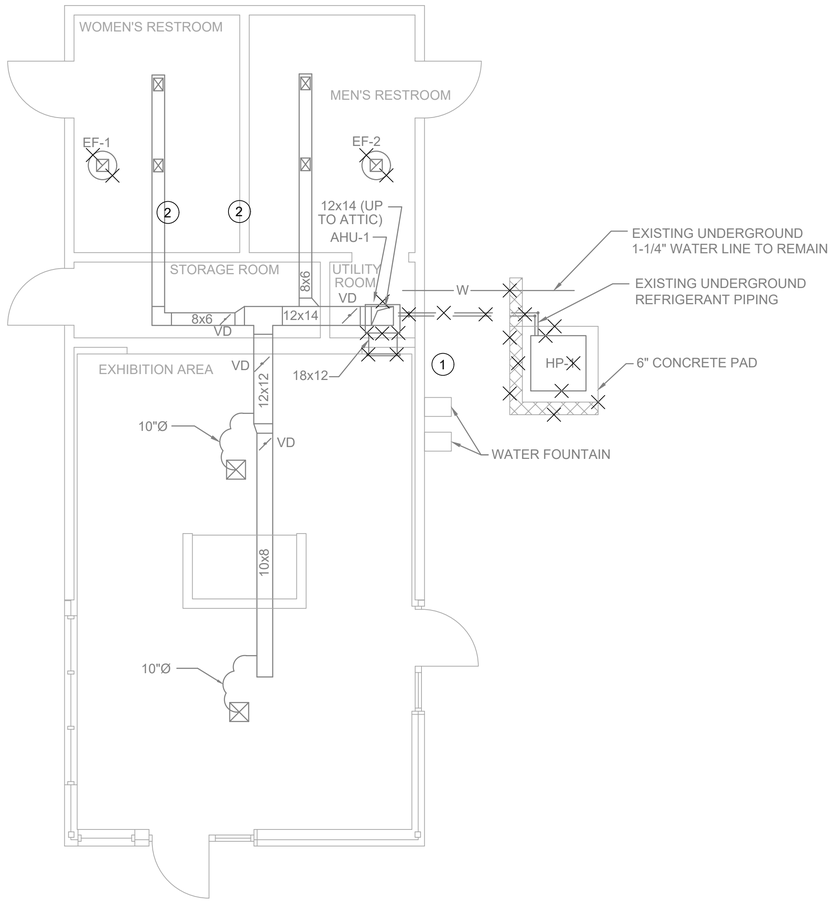

1 DEMOLITION FLOOR PLAN

1/4" = 1'-0"

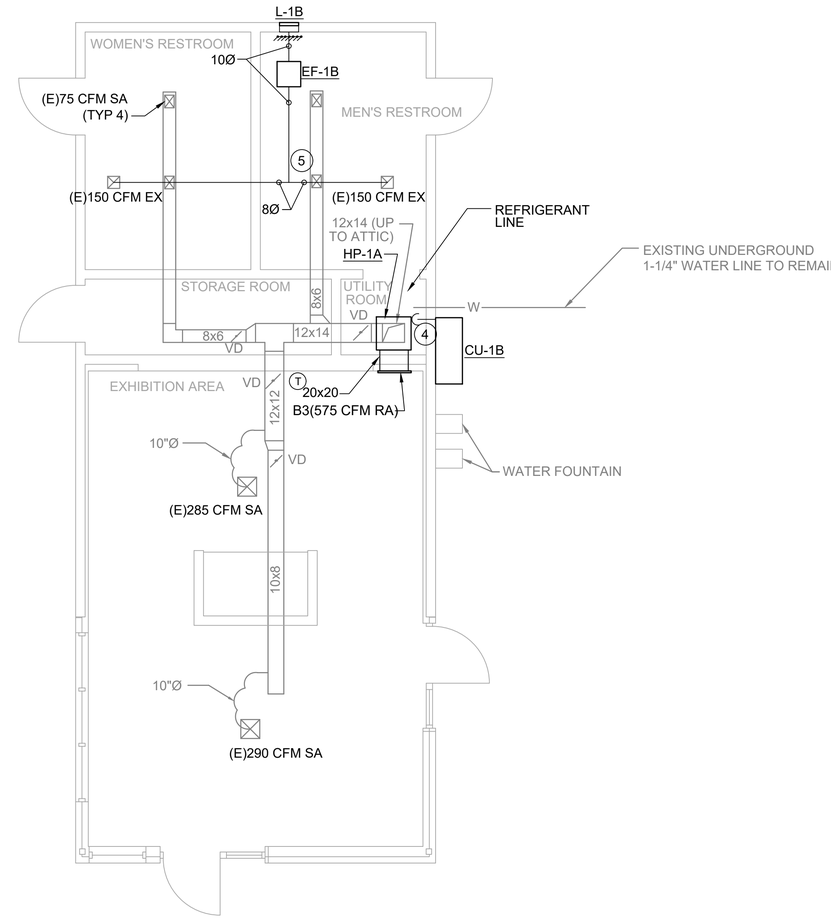

2 NEW WORK FLOOR PLAN

1/4" = 1'-0"

GENERAL NOTES:

1. THESE DRAWINGS ARE DIAGRAMMATIC IN NATURE AND NOT INTENDED TO SHOW ALL TRANSITIONS, OFFSETS, ETC. CONTRACTOR SHALL FIELD VERIFY EXISTING CONDITIONS AND PROVIDE ALL NECESSARY FITTINGS TO COMPLETE THE INTENT OF THE DRAWINGS. ANY DISCREPANCIES BETWEEN DRAWINGS AND FIELD CONDITIONS SHALL BE REPORTED TO THE CONTRACTING OFFICER FOR RESOLUTION. CONTRACTOR MAY LOCATE MECHANICAL EQUIPMENT DIFFERENTLY THAN SHOWN ON DRAWINGS DUE TO CONFLICTS, AS LONG AS FUNCTION AND/OR APPEARANCE ARE NOT AFFECTED.

2. ALL NEW MATERIAL, INCLUDING BUT NOT LIMITED TO DUCTWORK, PIPING, WIRING, AND HANGERS SHALL THAT PENETRATE SURFACES SHALL USE EXISTING OPENINGS WHENEVER POSSIBLE. IF NEW PENETRATIONS ARE REQUIRED OR EXISTING ONES ARE ABANDONED, USE MATERIALS THAT VISUALLY MATCH IN-PLACE ADJACENT SURFACES TO THE FULLEST EXTENT POSSIBLE. REFER TO SPECIFICATION 01 73 29 CUTTING AND PATCHING.

ELECTRICAL NOTES:

1. ALL ELECTRICAL WORK SHALL BE PERFORMED BY AN ELECTRICIAN LICENSED IN THE COMMONWEALTH OF VIRGINIA.

2. PRIOR TO THE START OF CONSTRUCTION, CONTRACTOR SHALL CONDUCT A THOROUGH ASSESSMENT OF THE EXISTING ELECTRICAL SYSTEM.ENSURE PROPOSED MECHANICAL REPLACEMENTS AND UPGRADES INTEGRATE SEAMLESSLY WITH THE CURRENT INFRASTRUCTURE. PERFORM LOAD CALCULATIONS FOR THE EXISTING ELECTRICAL SYSTEM TO ENSURE ADEQUATE POWER DISTRIBUTION. ADJUST FOR NEW LOADS OR EQUIPMENT, ENSURING THE SYSTEM CAN HANDLE THE ADDITIONAL DEMAND WITHOUT OVERLOAD.

3. ONCE EQUIPMENT AS BEEN DISCONNECTED, VERIFY THAT FEEDERS ARE DE-ENERGIZED AND DEVICES ARE OBSOLETE AND REMOVE WIRING, RACEWAY AND DEVICES. NOTIFY THE COR IF A FEEDER AND ASSOCIATED DEVICES ARE FOUND TO BE FOR EQUIPMENT THAT IS.

4. FOR EQUIPMENT BEING REPLACE IN-KIND, THE ELECTRICAL CONTRACTOR SHALL DISCONNECT POWER WIRING FROM MECHANICAL EQUIPMENT. NEATLY COIL DISCONNECTED WIRING AND STORE IN-PLACE DURING CONSTRUCTION. AFTER NEW EQUIPMENT HAS BEEN SET-IN-PLACE CONNECT EXISTING POWER WIRING TO NEW EQUIPMENT.

5. FOR ALL NEW EQUIPMENT, ELECTRICAL CONTRACTOR SHALL IDENTIFY THE POWER SOURCE, ENSURE THE PANEL HAS THE CAPACITY TO HANDLE THE ADDITIONAL LOAD. IF AN ELECTRICAL UPGRADE IS NECESSARY, NOTIFY COR. INSTALL DEDICATED CIRCUIT BREAKER AND PROPER WIRE FOR THE EQUIPMENT. RUN CONDUIT AND WIRING THROUGH EXISTING PENETRATION. INSTALL LOCAL DISCONNECT ON EQUIPMENT.

SCOPE OF WORK:

1. DEMOLISH HEAT PUMP, CONCRETE PAD, AND BRICK WALL. DEMOLISH ALL REFRIGERANT PIPING.
2. DEMOLISH EXHAUST FANS.
3. CLEAN ALL EXISTING DUCTWORK AND REPLACE ANY DAMAGES SHEET METAL AND INSULATION. ASSUME 10' OF NEW DUCTWORK AND INSULATION.
4. INSTALL NEW HEAT PUMP. OUTDOOR UNIT SHALL MOUNTED ON THE SIDE OF THE BUILDING. RUN NEW REFRIGERANT LINES IN THE BUILDING WITHOUT RUNNING BELOW GRADE. INDOOR UNITS SHALL BE INSTALLED IN EXISTING LOCATIONS. RECONNECT TO EXISTING DUCTWORK AND RUN CONDENSATION TO EXISTING DRAIN. PROVIDE NEW THERMOSTAT.
5. PROVIDE NEW EXHAUST FAN LOCATED IN THE CEILING PLENUM. PROVIDE NEW DUCTWORK CONNECTING FAN TO NEW LOUVER ON EXTERIOR WALL. ACCESS CEILING PLENUM THROUGH ACCESS HATCH IN STORAGE ROOM. AVOID ADD ANY OPENINGS IN CEILING/
6. BALANCE AIR SYSTEM BASED ON THE CFMS ON THE FLOOR PLAN.
7. HEAT PUMP AND FAN SHALL BE CONTROLLED BY MANUFACTURE'S INTEGRAL CONTROLS.

DESIGNED: ELS CADD ELS TECH. REVIEW: HACE DATE: APRIL 2025	SUB SHEET NO. M1.3	TITLE OF SHEET MECHANICAL FLOOR PLAN COLD HARBOR VISITOR CENTER REPLACEMENT OF HVAC SYSTEMS RICHMOND NATIONAL BATTLEFIELD PARK 3215 E. BROAD STREET, RICHMOND, VA 23223	DRAWING NO. 367 PMIS/PKG NO. 313918 SHEET 7 OF 20

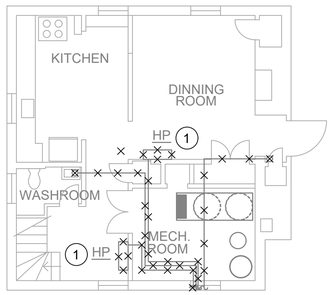

1 BASEMENT DEMO FLOOR PLAN

1/8" = 1'-0"

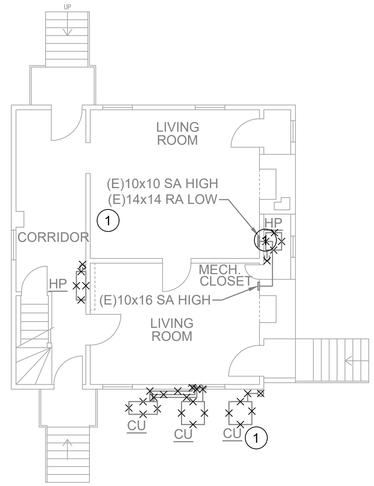

2 LEVEL1 DEMO FLOOR PLAN

1/8" = 1'-0"

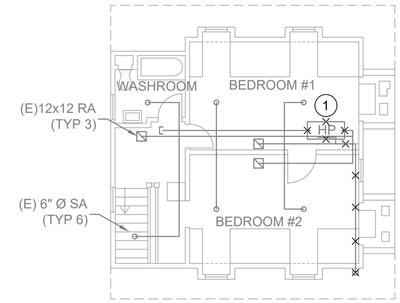

3 LEVEL 2 DEMO FLOOR PLAN

1/8" = 1'-0"

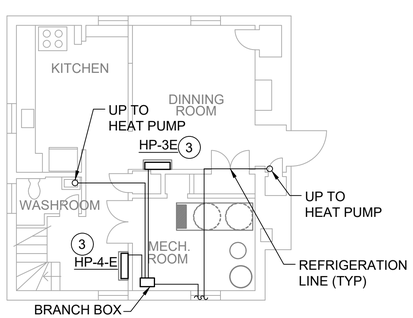

1 BASEMENT NEW WORK FLOOR PLAN

1/8" = 1'-0"

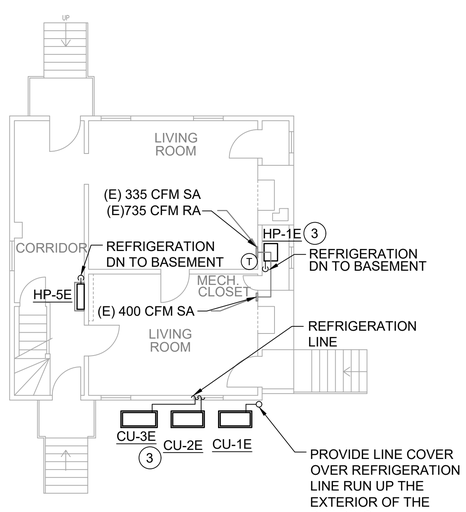

2 LEVEL1 NEW WORK FLOOR PLAN

1/8" = 1'-0"

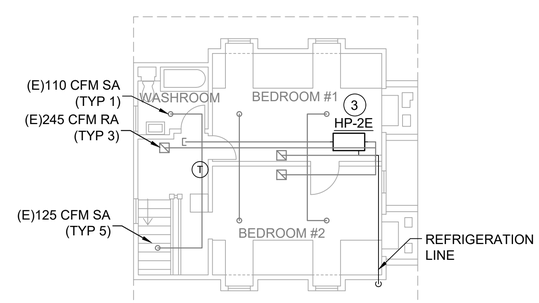

3 LEVEL 2 NEW WORK FLOOR PLAN

1/8" = 1'-0"

GENERAL NOTES:

1. THESE DRAWINGS ARE DIAGRAMMATIC IN NATURE AND NOT INTENDED TO SHOW ALL TRANSITIONS, OFFSETS, ETC. CONTRACTOR SHALL FIELD VERIFY EXISTING CONDITIONS AND PROVIDE ALL NECESSARY FITTINGS TO COMPLETE THE INTENT OF THE DRAWINGS. ANY DISCREPANCIES BETWEEN DRAWINGS AND FIELD CONDITIONS SHALL BE REPORTED TO THE CONTRACTING OFFICER FOR RESOLUTION. CONTRACTOR MAY LOCATE MECHANICAL EQUIPMENT DIFFERENTLY THAN SHOWN ON DRAWINGS DUE TO CONFLICTS, AS LONG AS FUNCTION AND/OR APPEARANCE ARE NOT AFFECTED.

2. ALL NEW MATERIAL, INCLUDING BUT NOT LIMITED TO DUCTWORK, PIPING, WIRING, AND HANGERS SHALL THAT PENETRATE SURFACES SHALL USE EXISTING OPENINGS WHENEVER POSSIBLE. IF NEW PENETRATIONS ARE REQUIRED OR EXISTING ONES ARE ABANDONED, USE MATERIALS THAT VISUALLY MATCH IN-PLACE ADJACENT SURFACES TO THE FULLEST EXTENT POSSIBLE. REFER TO SPECIFICATION 01 73 29 CUTTING AND PATCHING.

ELECTRICAL NOTES:

1. ALL ELECTRICAL WORK SHALL BE PERFORMED BY AN ELECTRICIAN LICENSED IN THE COMMONWEALTH OF VIRGINIA.

2. PRIOR TO THE START OF CONSTRUCTION, CONTRACTOR SHALL CONDUCT A THOROUGH ASSESSMENT OF THE EXISTING ELECTRICAL SYSTEM.ENSURE PROPOSED MECHANICAL REPLACEMENTS AND UPGRADES INTEGRATE SEAMLESSLY WITH THE CURRENT INFRASTRUCTURE. PERFORM LOAD CALCULATIONS FOR THE EXISTING ELECTRICAL SYSTEM TO ENSURE ADEQUATE POWER DISTRIBUTION. ADJUST FOR NEW LOADS OR EQUIPMENT, ENSURING THE SYSTEM CAN HANDLE THE ADDITIONAL DEMAND WITHOUT OVERLOAD.

3. ONCE EQUIPMENT AS BEEN DISCONNECTED, VERIFY THAT FEEDERS ARE DE-ENERGIZED AND DEVICES ARE OBSOLETE AND REMOVE WIRING, RACEWAY AND DEVICES. NOTIFY THE COR IF A FEEDER AND ASSOCIATED DEVICES ARE FOUND TO BE FOR EQUIPMENT THAT IS.

4. FOR EQUIPMENT BEING REPLACE IN-KIND, THE ELECTRICAL CONTRACTOR SHALL DISCONNECT POWER WIRING FROM MECHANICAL EQUIPMENT. NEATLY COIL DISCONNECTED WIRING AND STORE IN-PLACE DURING CONSTRUCTION. AFTER NEW EQUIPMENT HAS BEEN SET-IN-PLACE CONNECT EXISTING POWER WIRING TO NEW EQUIPMENT.

5. FOR ALL NEW EQUIPMENT, ELECTRICAL CONTRACTOR SHALL IDENTIFY THE POWER SOURCE, ENSURE THE PANEL HAS THE CAPACITY TO HANDLE THE ADDITIONAL LOAD. IF AN ELECTRICAL UPGRADE IS NECESSARY, NOTIFY COR. INSTALL DEDICATED CIRCUIT BREAKER AND PROPER WIRE FOR THE EQUIPMENT. RUN CONDUIT AND WIRING THROUGH EXISTING PENETRATION. INSTALL LOCAL DISCONNECT ON EQUIPMENT.

SCOPE OF WORK:

1. DEMOLISH HEAT PUMPS, CONCRETE PADS, AND REFRIGERANT PIPING. FUJITSU SPLIT SYSTEM CONSISTING OF (1) OUTDOOR UNIT AND (3) INDOOR UNIT SHALL BE RETURNED TO THE PARK.

2. DUCTWORK RECENTLY CLEANED AND DOES NOT NEED TO BE CLEANED.

3. INSTALL NEW HEAT PUMPS. OUTDOOR UNITS SHALL BE ON NEW 3" PRECAST CONCRETE OR HPDE PAD . REFRIGERANT LINE SERVING HP-1E RUNS UP THE EXTERIOR OF THE BUILDING INTO THE SECOND FLOOR. REFRIGERANT LINE SERVING HP-2E RUNS ALONG THE GROUND TO OPENING INTO THE BASEMENT AND THROUGH THE BASEMENT CEILING TO A RISER TO THE FIRST FLOOR CU-3E CONSISTS OF (3) REFRIGERANT LINE SERVING HP-3E, HP-4E, AND HP-5E. ALL (3) LINES RUNS ALONG THE GROUND TO OPENING INTO THE BASEMENT TO THERE DEDICATED UNIT.RUN NEW REFRIGERANT LINES IN EXISTING LOCATIONS. INDOOR UNITS SHALL BE INSTALLED IN EXISTING LOCATIONS. RECONNECT TO EXISTING DUCTWORK AND RUN CONDENSATION TO EXISTING DRAIN. PROVIDE NEW THERMOSTAT FOR EACH HEAT PUMP.

4. BALANCE AIR SYSTEM BASED ON THE CFMS ON THE FLOOR PLAN.

5. HEAT PUMP SHALL BE CONTROLLED BY MANUFACTURE'S INTEGRAL CONTROLS.

DESIGNED: ELS CADD ELS TECH. REVIEW: HACE DATE: APRIL 2025	SUB SHEET NO. M1.4	TITLE OF SHEET MECHANICAL FLOOR PLAN WATT HOUSE REPLACEMENT OF HVAC SYSTEMS RICHMOND NATIONAL BATTLEFIELD PARK 3215 E. BROAD STREET, RICHMOND, VA 23223	DRAWING NO. 367 PMIS/PKG NO. 313918 SHEET 8 OF 20

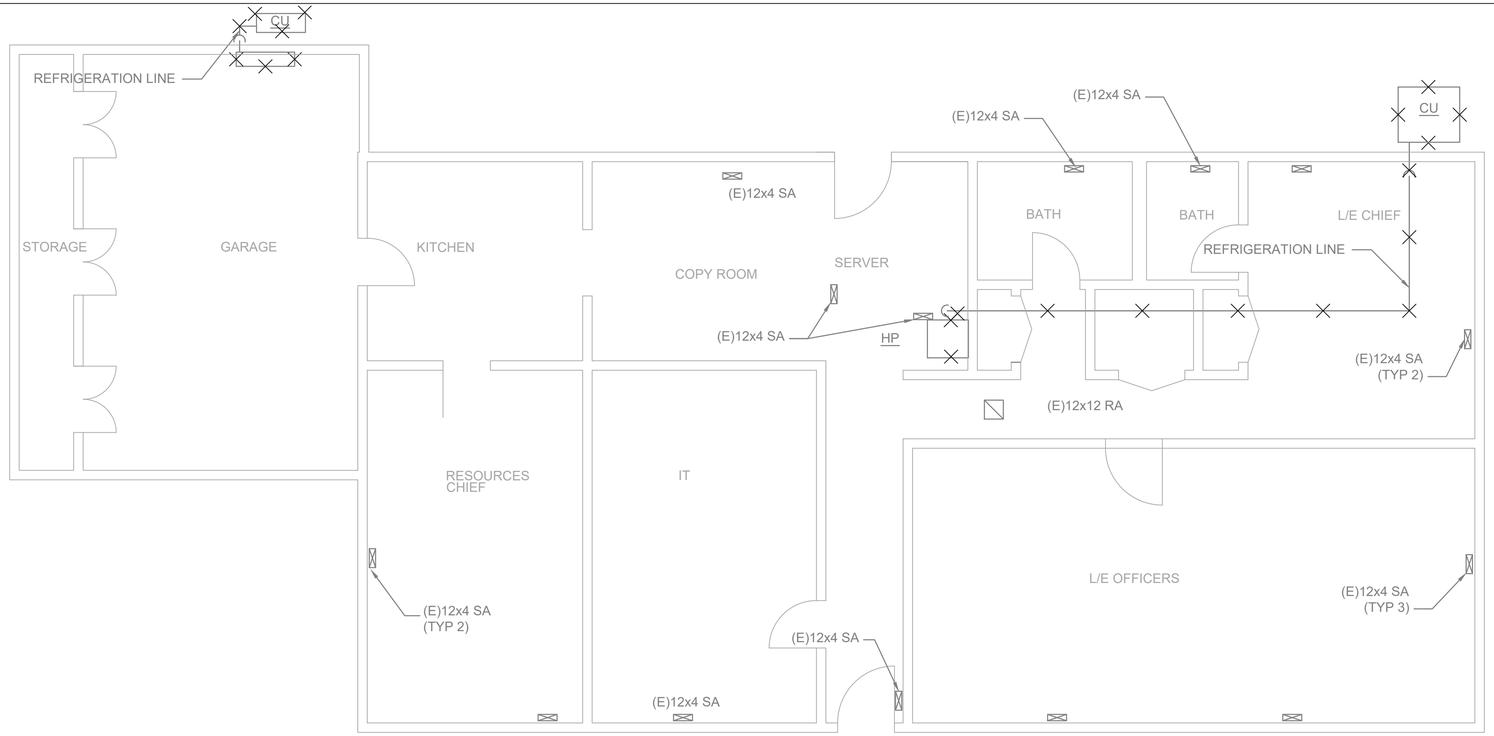

1 1900 MAINTENANCE WAY DEMO FLOOR PLAN

1/4" = 1'-0"

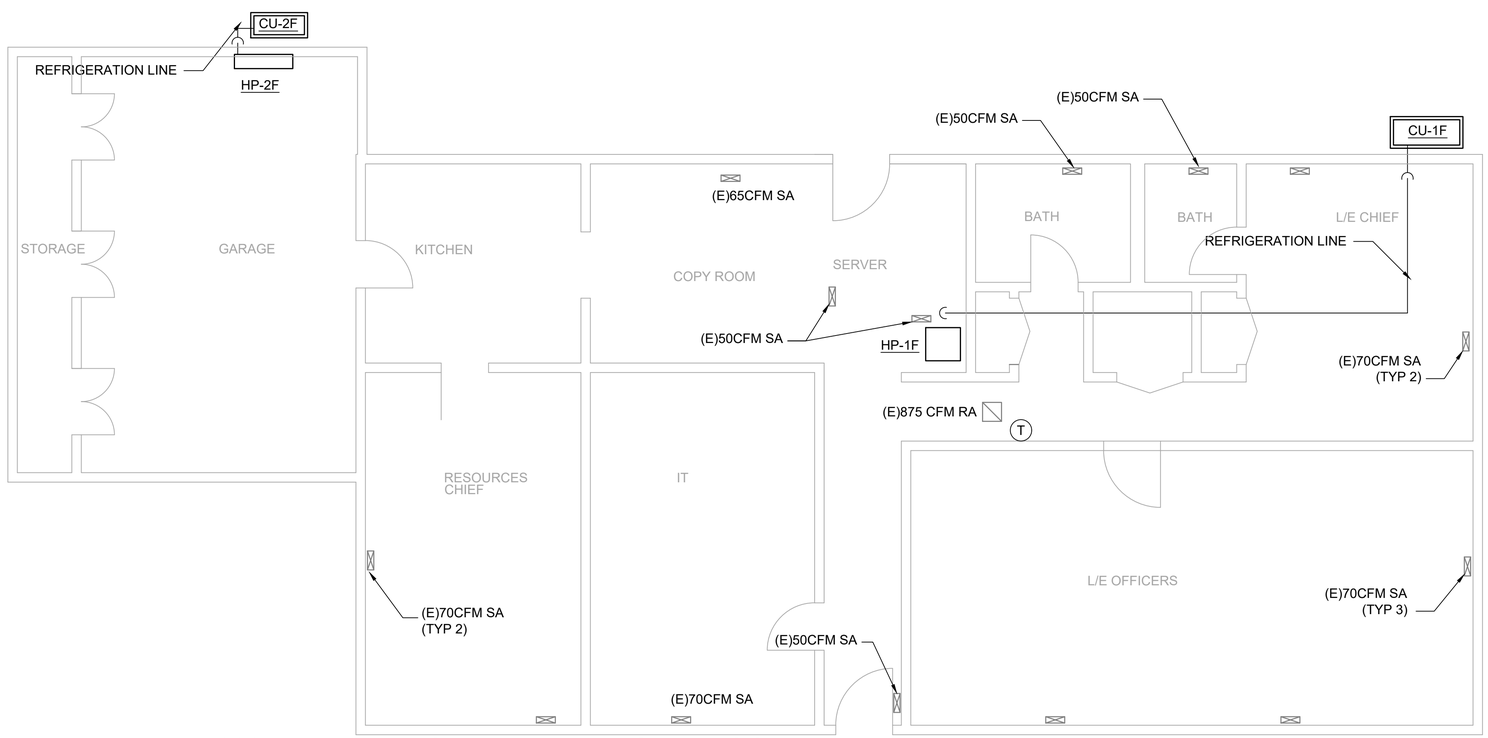

2 1900 MAINTENANCE WAY NEW WORK FLOOR PLAN

1/4" = 1'-0"

GENERAL NOTES:

1. THESE DRAWINGS ARE DIAGRAMMATIC IN NATURE AND NOT INTENDED TO SHOW ALL TRANSITIONS, OFFSETS, ETC. CONTRACTOR SHALL FIELD VERIFY EXISTING CONDITIONS AND PROVIDE ALL NECESSARY FITTINGS TO COMPLETE THE INTENT OF THE DRAWINGS. ANY DISCREPANCIES BETWEEN DRAWINGS AND FIELD CONDITIONS SHALL BE REPORTED TO THE CONTRACTING OFFICER FOR RESOLUTION. CONTRACTOR MAY LOCATE MECHANICAL EQUIPMENT DIFFERENTLY THAN SHOWN ON DRAWINGS DUE TO CONFLICTS, AS LONG AS FUNCTION AND/OR APPEARANCE ARE NOT AFFECTED.

2. ALL NEW MATERIAL, INCLUDING BUT NOT LIMITED TO DUCTWORK, PIPING, WIRING, AND HANGERS SHALL THAT PENETRATE SURFACES SHALL USE EXISTING OPENINGS WHENEVER POSSIBLE. IF NEW PENETRATIONS ARE REQUIRED OR EXISTING ONES ARE ABANDONED, USE MATERIALS THAT VISUALLY MATCH IN-PLACE ADJACENT SURFACES TO THE FULLEST EXTENT POSSIBLE. REFER TO SPECIFICATION 01 73 29 CUTTING AND PATCHING.

ELECTRICAL NOTES:

1. ALL ELECTRICAL WORK SHALL BE PERFORMED BY AN ELECTRICIAN LICENSED IN THE COMMONWEALTH OF VIRGINIA.

2. PRIOR TO THE START OF CONSTRUCTION, CONTRACTOR SHALL CONDUCT A THOROUGH ASSESSMENT OF THE EXISTING ELECTRICAL SYSTEM.ENSURE PROPOSED MECHANICAL REPLACEMENTS AND UPGRADES INTEGRATE SEAMLESSLY WITH THE CURRENT INFRASTRUCTURE. PERFORM LOAD CALCULATIONS FOR THE EXISTING ELECTRICAL SYSTEM TO ENSURE ADEQUATE POWER DISTRIBUTION. ADJUST FOR NEW LOADS OR EQUIPMENT, ENSURING THE SYSTEM CAN HANDLE THE ADDITIONAL DEMAND WITHOUT OVERLOAD.

3. ONCE EQUIPMENT AS BEEN DISCONNECTED, VERIFY THAT FEEDERS ARE DE-ENERGIZED AND DEVICES ARE OBSOLETE AND REMOVE WIRING, RACEWAY AND DEVICES. NOTIFY THE COR IF A FEEDER AND ASSOCIATED DEVICES ARE FOUND TO BE FOR EQUIPMENT THAT IS.

4. FOR EQUIPMENT BEING REPLACE IN-KIND, THE ELECTRICAL CONTRACTOR SHALL DISCONNECT POWER WIRING FROM MECHANICAL EQUIPMENT. NEATLY COIL DISCONNECTED WIRING AND STORE IN-PLACE DURING CONSTRUCTION. AFTER NEW EQUIPMENT HAS BEEN SET-IN-PLACE CONNECT EXISTING POWER WIRING TO NEW EQUIPMENT.

5. FOR ALL NEW EQUIPMENT, ELECTRICAL CONTRACTOR SHALL IDENTIFY THE POWER SOURCE, ENSURE THE PANEL HAS THE CAPACITY TO HANDLE THE ADDITIONAL LOAD. IF AN ELECTRICAL UPGRADE IS NECESSARY, NOTIFY COR. INSTALL DEDICATED CIRCUIT BREAKER AND PROPER WIRE FOR THE EQUIPMENT. RUN CONDUIT AND WIRING THROUGH EXISTING PENETRATION. INSTALL LOCAL DISCONNECT ON EQUIPMENT.

SCOPE OF WORK:

1. DEMOLISH HEAT PUMPS, CONCRETE PADS, AND REFRIGERANT PIPING.
2. CLEAN ALL EXISTING DUCTWORK AND REPLACE ANY DAMAGES SHEET METAL AND INSULATION. ASSUME 10' OF NEW DUCTWORK AND INSULATION.
3. INSTALL NEW HEAT PUMPS. OUTDOOR UNITS SHALL BE ON NEW 3" PRECAST CONCRETE OR HPDE PAD. REFRIGERANT LINE SERVING HP-1F AND HP-2F RUNS ALONG THE GROUND TO OPENING INTO THE BUILDING. RUN NEW REFRIGERANT LINES IN EXISTING LOCATIONS. INDOOR UNITS SHALL BE INSTALLED IN EXISTING LOCATIONS. RECONNECT TO EXISTING DUCTWORK AND RUN CONDENSATION TO EXISTING DRAIN. PROVIDE NEW THERMOSTAT FOR EACH HEAT PUMP.
4. BALANCE AIR SYSTEM BASED ON THE CFMS ON THE FLOOR PLAN.
5. HEAT PUMP SHALL BE CONTROLLED BY MANUFACTURE'S INTEGRAL CONTROLS.

DESIGNED: ELS CADD ELS TECH. REVIEW: HACE DATE: APRIL 2025	SUB SHEET NO. M1.5	TITLE OF SHEET MECHANICAL FLOOR PLAN RANGER OFFICE, 1900 MAINTENANCE WAY REPLACEMENT OF HVAC SYSTEMS RICHMOND NATIONAL BATTLEFIELD PARK 3215 E. BROAD STREET, RICHMOND, VA 23223	DRAWING NO. 367 PMIS/PKG NO. 313918 SHEET 9 OF 20

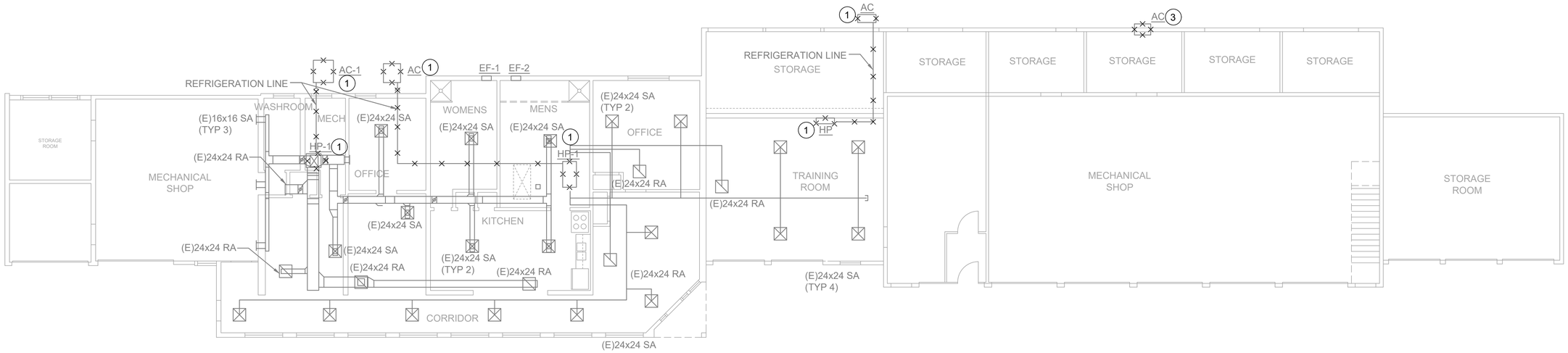

1 DEMOLITION FIRST FLOOR PLAN

1/8" = 1'-0"

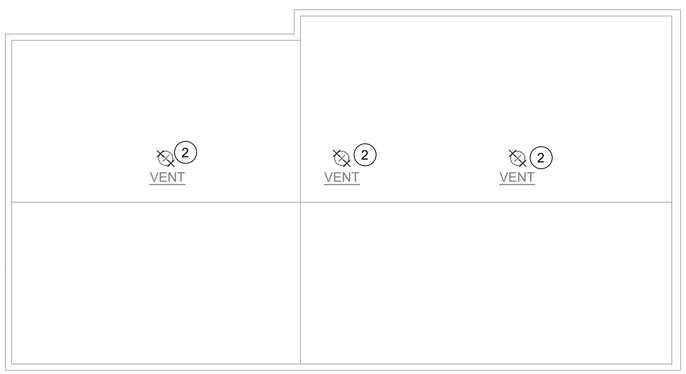

2 DEMOLITION ROOF PLAN

1/8" = 1'-0"

GENERAL NOTES:

1. THESE DRAWINGS ARE DIAGRAMMATIC IN NATURE AND NOT INTENDED TO SHOW ALL TRANSITIONS, OFFSETS, ETC. CONTRACTOR SHALL FIELD VERIFY EXISTING CONDITIONS AND PROVIDE ALL NECESSARY FITTINGS TO COMPLETE THE INTENT OF THE DRAWINGS. ANY DISCREPANCIES BETWEEN DRAWINGS AND FIELD CONDITIONS SHALL BE REPORTED TO THE CONTRACTING OFFICER FOR RESOLUTION. CONTRACTOR MAY LOCATE MECHANICAL EQUIPMENT DIFFERENTLY THAN SHOWN ON DRAWINGS DUE TO CONFLICTS, AS LONG AS FUNCTION AND/OR APPEARANCE ARE NOT AFFECTED.

2. ALL NEW MATERIAL, INCLUDING BUT NOT LIMITED TO DUCTWORK, PIPING, WIRING, AND HANGERS SHALL THAT PENETRATE SURFACES SHALL USE EXISTING OPENINGS WHENEVER POSSIBLE. IF NEW PENETRATIONS ARE REQUIRED OR EXISTING ONES ARE ABANDONED, USE MATERIALS THAT VISUALLY MATCH IN-PLACE ADJACENT SURFACES TO THE FULLEST EXTENT POSSIBLE. REFER TO SPECIFICATION 01 73 29 CUTTING AND PATCHING.

ELECTRICAL NOTES:

1. ALL ELECTRICAL WORK SHALL BE PERFORMED BY AN ELECTRICIAN LICENSED IN THE COMMONWEALTH OF VIRGINIA.

2. PRIOR TO THE START OF CONSTRUCTION, CONTRACTOR SHALL CONDUCT A THOROUGH ASSESSMENT OF THE EXISTING ELECTRICAL SYSTEM.ENSURE PROPOSED MECHANICAL REPLACEMENTS AND UPGRADES INTEGRATE SEAMLESSLY WITH THE CURRENT INFRASTRUCTURE. PERFORM LOAD CALCULATIONS FOR THE EXISTING ELECTRICAL SYSTEM TO ENSURE ADEQUATE POWER DISTRIBUTION. ADJUST FOR NEW LOADS OR EQUIPMENT, ENSURING THE SYSTEM CAN HANDLE THE ADDITIONAL DEMAND WITHOUT OVERLOAD.

3. ONCE EQUIPMENT AS BEEN DISCONNECTED, VERIFY THAT FEEDERS ARE DE-ENERGIZED AND DEVICES ARE OBSOLETE AND REMOVE WIRING, RACEWAY AND DEVICES. NOTIFY THE COR IF A FEEDER AND ASSOCIATED DEVICES ARE FOUND TO BE FOR EQUIPMENT THAT IS.

SCOPE OF WORK:

1. DEMOLISH HEAT PUMPS, CONCRETE PADS, AND REFRIGERANT PIPING.
2. DEMOLISH (3) ATTIC VENTS
3. DEMOLISH WALL AC UNIT AND ENCLOSE WALL.

DESIGNED: ELS CADD ELS TECH. REVIEW: HACE DATE: APRIL 2025	SUB SHEET NO. M1.6	TITLE OF SHEET MECHANICAL DEMOLITION FLOOR PLAN MAINTENANCE BUILDING REPLACEMENT OF HVAC SYSTEMS RICHMOND NATIONAL BATTLEFIELD PARK 3215 E. BROAD STREET, RICHMOND, VA 23223	DRAWING NO. 367 PMIS/PKG NO. 313918 SHEET 10 OF 20

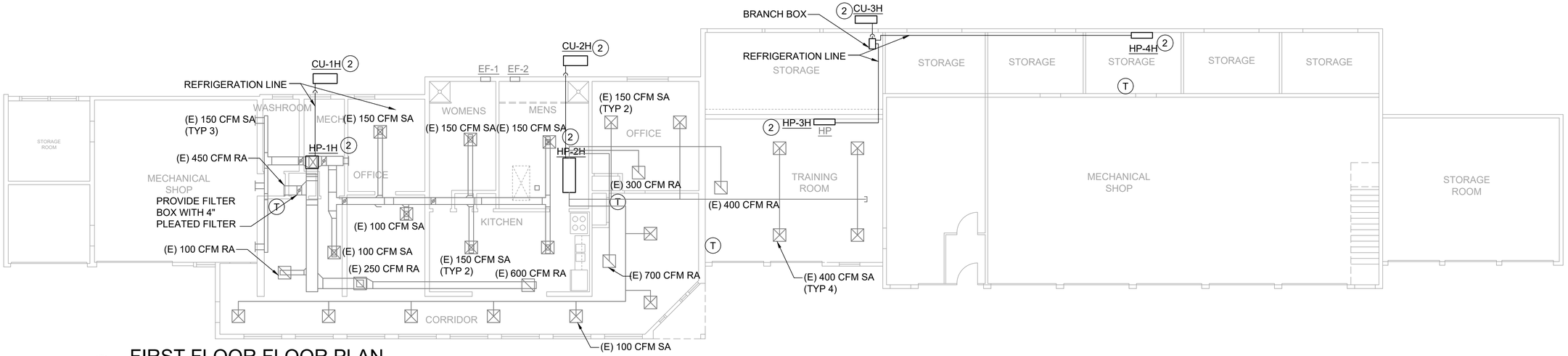

1 FIRST FLOOR FLOOR PLAN

1/8" = 1'-0"

2 NEW WORK FLOOR PLAN

1/8" = 1'-0"

GENERAL NOTES:

1. THESE DRAWINGS ARE DIAGRAMMATIC IN NATURE AND NOT INTENDED TO SHOW ALL TRANSITIONS, OFFSETS, ETC. CONTRACTOR SHALL FIELD VERIFY EXISTING CONDITIONS AND PROVIDE ALL NECESSARY FITTINGS TO COMPLETE THE INTENT OF THE DRAWINGS. ANY DISCREPANCIES BETWEEN DRAWINGS AND FIELD CONDITIONS SHALL BE REPORTED TO THE CONTRACTING OFFICER FOR RESOLUTION. CONTRACTOR MAY LOCATE MECHANICAL EQUIPMENT DIFFERENTLY THAN SHOWN ON DRAWINGS DUE TO CONFLICTS, AS LONG AS FUNCTION AND/OR APPEARANCE ARE NOT AFFECTED.

2. ALL NEW MATERIAL, INCLUDING BUT NOT LIMITED TO DUCTWORK, PIPING, WIRING, AND HANGERS SHALL THAT PENETRATE SURFACES SHALL USE EXISTING OPENINGS WHENEVER POSSIBLE. IF NEW PENETRATIONS ARE REQUIRED OR EXISTING ONES ARE ABANDONED, USE MATERIALS THAT VISUALLY MATCH IN-PLACE ADJACENT SURFACES TO THE FULLEST EXTENT POSSIBLE. REFER TO SPECIFICATION 01 73 29 CUTTING AND PATCHING.

ELECTRICAL NOTES:

1. ALL ELECTRICAL WORK SHALL BE PERFORMED BY AN ELECTRICIAN LICENSED IN THE COMMONWEALTH OF VIRGINIA.

2. FOR EQUIPMENT BEING REPLACE IN-KIND, THE ELECTRICAL CONTRACTOR SHALL DISCONNECT POWER WIRING FROM MECHANICAL EQUIPMENT. NEATLY COIL DISCONNECTED WIRING AND STORE IN-PLACE DURING CONSTRUCTION. AFTER NEW EQUIPMENT HAS BEEN SET-IN-PLACE CONNECT EXISTING POWER WIRING TO NEW EQUIPMENT.

3. FOR ALL NEW EQUIPMENT, ELECTRICAL CONTRACTOR SHALL IDENTIFY THE POWER SOURCE, ENSURE THE PANEL HAS THE CAPACITY TO HANDLE THE ADDITIONAL LOAD. IF AN ELECTRICAL UPGRADE IS NECESSARY, NOTIFY COR. INSTALL DEDICATED CIRCUIT BREAKER AND PROPER WIRE FOR THE EQUIPMENT. RUN CONDUIT AND WIRING THROUGH EXISTING PENETRATION. INSTALL LOCAL DISCONNECT ON EQUIPMENT.

SCOPE OF WORK:

1. CLEAN ALL EXISTING DUCTWORK AND REPLACE ANY DAMAGES SHEET METAL AND INSULATION. ASSUME 10' OF NEW DUCTWORK AND INSULATION.

2. INSTALL NEW HEAT PUMPS. OUTDOOR UNITS SHALL BE ON NEW 3" PRECAST CONCRETE OR HPDE PAD . REFRIGERANT LINE SERVING HP-1H RUNS ALONG THE GROUND TO EXISTING OPENING INTO THE BUILDING. REFRIGERANT LINE SERVING HP-2H RUNS UP THE EXTERIOR OF THE BUILDING ENTERING THE BUILDING THROUGH A NEW OPENING INTO THE ATTIC. REFRIGERANT LINE FROM CU-3H RUNS ALONG THE GROUND TO EXISTING OPENING INTO THE BUILDING. BRANCH BOX SERVING HP-3H AND 4H SHALL BE LOCATED IN STORAGE ROOM IN AN ACCESSIBLE LOCATION. INDOOR UNITS SHALL BE INSTALLED IN EXISTING LOCATIONS. RECONNECT TO EXISTING DUCTWORK AND RUN CONDENSATION TO EXISTING DRAIN. PROVIDE NEW THERMOSTAT FOR EACH HEAT PUMP.

3. BALANCE AIR SYSTEM BASED ON THE CFMS ON THE FLOOR PLAN.

4. INSTALL EXHAUST FANS ON THE ROOF AND LOCATE DISCONNECTS IN THE ATTIC.

5. HEAT PUMP AND FANS SHALL BE CONTROLLED BY MANUFACTURE'S INTEGRAL CONTROLS.

DESIGNED: ELS	SUB SHEET NO.	TITLE OF SHEET	DRAWING NO. 367
CADD ELS	M1.7	MECHANICAL NEW WORK FLOOR PLAN MAINTENANCE BUILDING	PMIS/PKG NO. 313918
TECH. REVIEW: HACE		REPLACEMENT OF HVAC SYSTEMS RICHMOND NATIONAL BATTLEFIELD PARK 3215 E. BROAD STREET, RICHMOND, VA 23223	SHEET 11 OF 20
DATE: APRIL 2025			

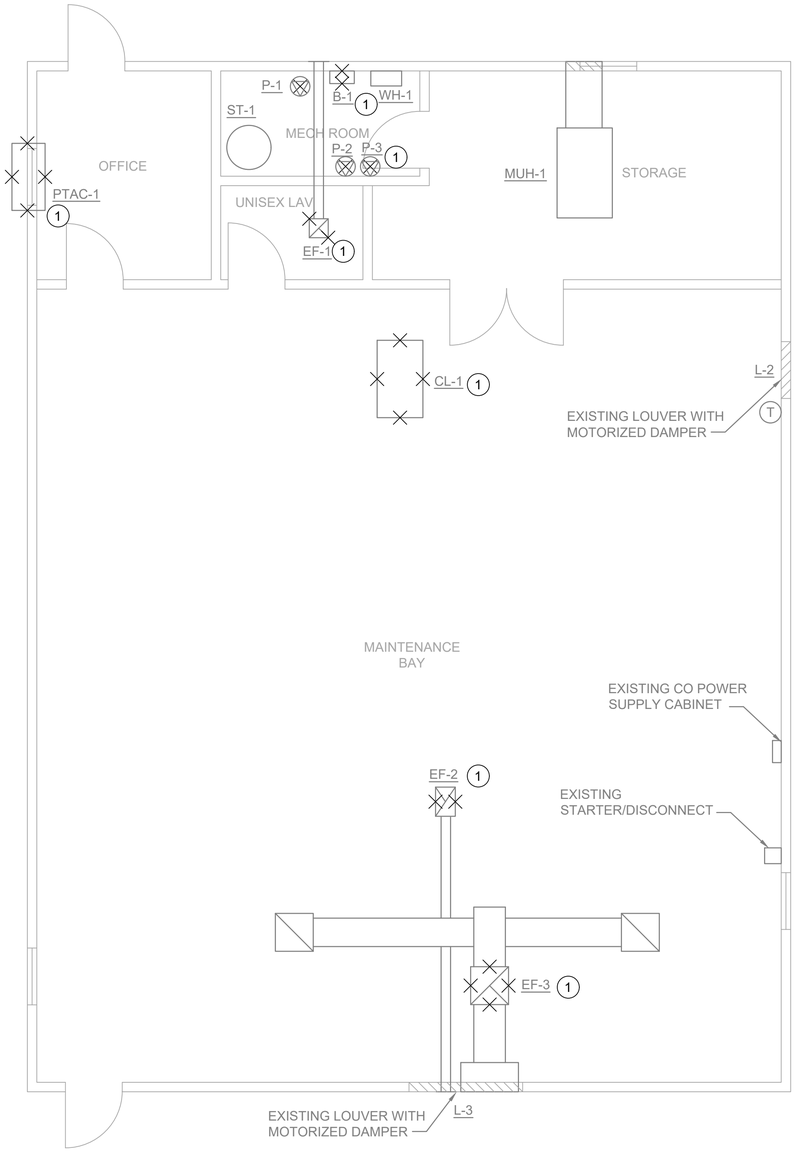

1 DEMOLITION FLOOR PLAN

1/4" = 1'-0"

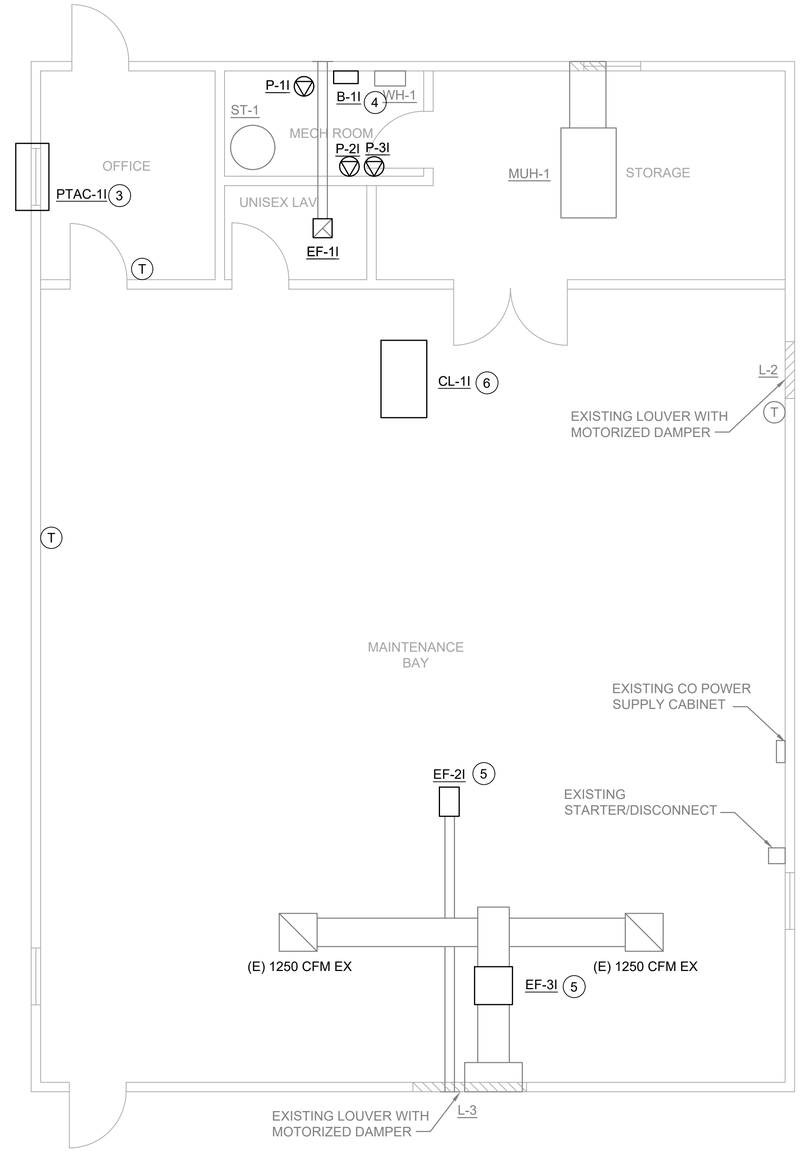

2 NEW WORK FLOOR PLAN

1/4" = 1'-0"

GENERAL NOTES:

1. THESE DRAWINGS ARE DIAGRAMMATIC IN NATURE AND NOT INTENDED TO SHOW ALL TRANSITIONS, OFFSETS, ETC. CONTRACTOR SHALL FIELD VERIFY EXISTING CONDITIONS AND PROVIDE ALL NECESSARY FITTINGS TO COMPLETE THE INTENT OF THE DRAWINGS. ANY DISCREPANCIES BETWEEN DRAWINGS AND FIELD CONDITIONS SHALL BE REPORTED TO THE CONTRACTING OFFICER FOR RESOLUTION. CONTRACTOR MAY LOCATE MECHANICAL EQUIPMENT DIFFERENTLY THAN SHOWN ON DRAWINGS DUE TO CONFLICTS, AS LONG AS FUNCTION AND/OR APPEARANCE ARE NOT AFFECTED.

2. ALL NEW MATERIAL, INCLUDING BUT NOT LIMITED TO DUCTWORK, PIPING, WIRING, AND HANGERS SHALL THAT PENETRATE SURFACES SHALL USE EXISTING OPENINGS WHENEVER POSSIBLE. IF NEW PENETRATIONS ARE REQUIRED OR EXISTING ONES ARE ABANDONED, USE MATERIALS THAT VISUALLY MATCH IN-PLACE ADJACENT SURFACES TO THE FULLEST EXTENT POSSIBLE. REFER TO SPECIFICATION 01 73 29 CUTTING AND PATCHING.

ELECTRICAL NOTES:

1. ALL ELECTRICAL WORK SHALL BE PERFORMED BY AN ELECTRICIAN LICENSED IN THE COMMONWEALTH OF VIRGINIA.

2. PRIOR TO THE START OF CONSTRUCTION, CONTRACTOR SHALL CONDUCT A THOROUGH ASSESSMENT OF THE EXISTING ELECTRICAL SYSTEM.ENSURE PROPOSED MECHANICAL REPLACEMENTS AND UPGRADES INTEGRATE SEAMLESSLY WITH THE CURRENT INFRASTRUCTURE. PERFORM LOAD CALCULATIONS FOR THE EXISTING ELECTRICAL SYSTEM TO ENSURE ADEQUATE POWER DISTRIBUTION. ADJUST FOR NEW LOADS OR EQUIPMENT, ENSURING THE SYSTEM CAN HANDLE THE ADDITIONAL DEMAND WITHOUT OVERLOAD.

3. ONCE EQUIPMENT AS BEEN DISCONNECTED, VERIFY THAT FEEDERS ARE DE-ENERGIZED AND DEVICES ARE OBSOLETE AND REMOVE WIRING, RACEWAY AND DEVICES. NOTIFY THE COR IF A FEEDER AND ASSOCIATED DEVICES ARE FOUND TO BE FOR EQUIPMENT THAT IS.

4. FOR EQUIPMENT BEING REPLACE IN-KIND, THE ELECTRICAL CONTRACTOR SHALL DISCONNECT POWER WIRING FROM MECHANICAL EQUIPMENT. NEATLY COIL DISCONNECTED WIRING AND STORE IN-PLACE DURING CONSTRUCTION. AFTER NEW EQUIPMENT HAS BEEN SET-IN-PLACE CONNECT EXISTING POWER WIRING TO NEW EQUIPMENT.

5. FOR ALL NEW EQUIPMENT, ELECTRICAL CONTRACTOR SHALL IDENTIFY THE POWER SOURCE, ENSURE THE PANEL HAS THE CAPACITY TO HANDLE THE ADDITIONAL LOAD. IF AN ELECTRICAL UPGRADE IS NECESSARY, NOTIFY COR. INSTALL DEDICATED CIRCUIT BREAKER AND PROPER WIRE FOR THE EQUIPMENT. RUN CONDUIT AND WIRING THROUGH EXISTING PENETRATION. INSTALL LOCAL DISCONNECT ON EQUIPMENT.

SCOPE OF WORK:

1. DEMOLISH PTAC UNIT, PUMPS, EXHAUST FANS, AND AIR CLEANER.
2. CLEAN ALL EXISTING DUCTWORK AND REPLACE ANY DAMAGES SHEET METAL AND INSULATION. ASSUME 10' OF NEW DUCTWORK AND INSULATION.
3. INSTALL NEW PTAC UNIT. INSTALLED IN EXISTING LOCATION. 3/4" CONDENSATE, PIPE DOWN EXTERIOR OF BUILDING AND DRAIN ON SPLASH BLOCK. PROVIDE NEW THERMOSTAT.
4. INSTALL NEW BOILER IN EXISTING LOCATION. PROVIDE NEW BOILER COMBUSTION AND EXHAUST FLUE. RUN AND DISCHARGE IN EXISTING LOCATION. REFER TO DETAIL FOR UPDATED PIPING.
5. INSTALL NEW FANS IN LOCATION OF EXISTING FANS AND CONNECT TO EXISTING LOCATION.
6. INSTALL NEW AIR CLEANER IN EXISTING LOCATION.
7. CONTROL SYSTEM...

DESIGNED: ELS	SUB SHEET NO.	TITLE OF SHEET	DRAWING NO. 367
CADD ELS	M1.8	MECHANICAL FLOOR PLAN AUTO SHOP BUILDING	PMIS/PKG NO. 313918
TECH. REVIEW: HACE		REPLACEMENT OF HVAC SYSTEMS RICHMOND NATIONAL BATTLEFIELD PARK 3215 E. BROAD STREET, RICHMOND, VA 23223	SHEET 12 OF 20
DATE: APRIL 2025			

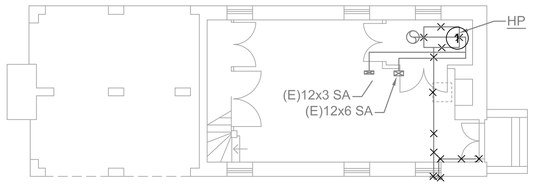

1 BASEMENT DEMO FLOOR PLAN
1/8" = 1'-0"

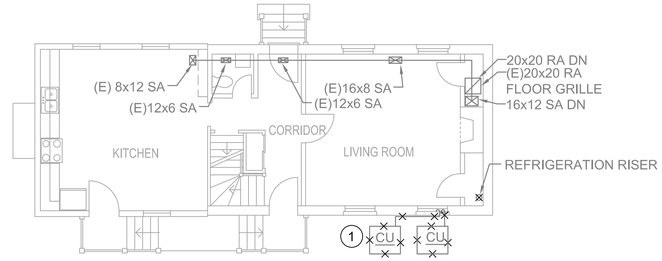

2 LEVEL1 DEMO FLOOR PLAN
1/8" = 1'-0"

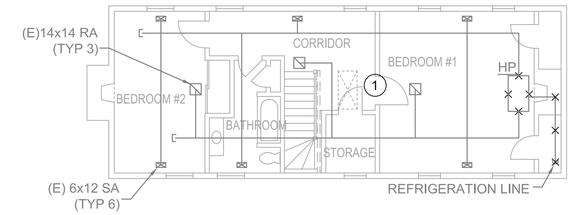

3 LEVEL 2 DEMO FLOOR PLAN
1/8" = 1'-0"

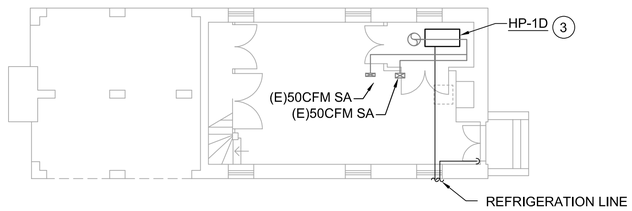

GARTHRIGHT - BASEMENT FLOOR PLAN
SCALE: 1/4"=1'-0"

1 BASEMENT NEW WORK FLOOR PLAN
1/8" = 1'-0"

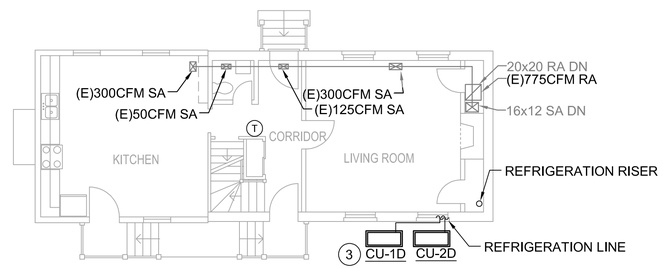

2 LEVEL1 NEW WORK FLOOR PLAN
1/8" = 1'-0"

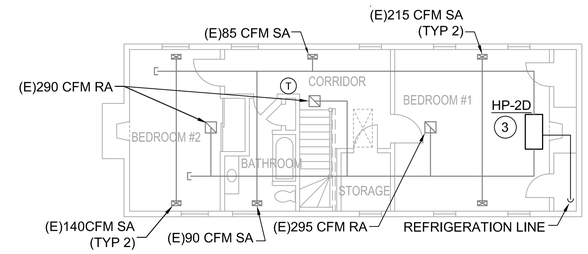

3 LEVEL 2 NEW WORK FLOOR PLAN
1/8" = 1'-0"

GENERAL NOTES:

1. THESE DRAWINGS ARE DIAGRAMMATIC IN NATURE AND NOT INTENDED TO SHOW ALL TRANSITIONS, OFFSETS, ETC. CONTRACTOR SHALL FIELD VERIFY EXISTING CONDITIONS AND PROVIDE ALL NECESSARY FITTINGS TO COMPLETE THE INTENT OF THE DRAWINGS. ANY DISCREPANCIES BETWEEN DRAWINGS AND FIELD CONDITIONS SHALL BE REPORTED TO THE CONTRACTING OFFICER FOR RESOLUTION. CONTRACTOR MAY LOCATE MECHANICAL EQUIPMENT DIFFERENTLY THAN SHOWN ON DRAWINGS DUE TO CONFLICTS, AS LONG AS FUNCTION AND/OR APPEARANCE ARE NOT AFFECTED.

2. ALL NEW MATERIAL, INCLUDING BUT NOT LIMITED TO DUCTWORK, PIPING, WIRING, AND HANGERS SHALL THAT PENETRATE SURFACES SHALL USE EXISTING OPENINGS WHENEVER POSSIBLE. IF NEW PENETRATIONS ARE REQUIRED OR EXISTING ONES ARE ABANDONED, USE MATERIALS THAT VISUALLY MATCH IN-PLACE ADJACENT SURFACES TO THE FULLEST EXTENT POSSIBLE. REFER TO SPECIFICATION 01 73 29 CUTTING AND PATCHING.

ELECTRICAL NOTES:

1. ALL ELECTRICAL WORK SHALL BE PERFORMED BY AN ELECTRICIAN LICENSED IN THE COMMONWEALTH OF VIRGINIA.

2. PRIOR TO THE START OF CONSTRUCTION, CONTRACTOR SHALL CONDUCT A THOROUGH ASSESSMENT OF THE EXISTING ELECTRICAL SYSTEM.ENSURE PROPOSED MECHANICAL REPLACEMENTS AND UPGRADES INTEGRATE SEAMLESSLY WITH THE CURRENT INFRASTRUCTURE. PERFORM LOAD CALCULATIONS FOR THE EXISTING ELECTRICAL SYSTEM TO ENSURE ADEQUATE POWER DISTRIBUTION. ADJUST FOR NEW LOADS OR EQUIPMENT, ENSURING THE SYSTEM CAN HANDLE THE ADDITIONAL DEMAND WITHOUT OVERLOAD.

3. ONCE EQUIPMENT AS BEEN DISCONNECTED, VERIFY THAT FEEDERS ARE DE-ENERGIZED AND DEVICES ARE OBSOLETE AND REMOVE WIRING, RACEWAY AND DEVICES. NOTIFY THE COR IF A FEEDER AND ASSOCIATED DEVICES ARE FOUND TO BE FOR EQUIPMENT THAT IS.

4. FOR EQUIPMENT BEING REPLACE IN-KIND, THE ELECTRICAL CONTRACTOR SHALL DISCONNECT POWER WIRING FROM MECHANICAL EQUIPMENT. NEATLY COIL DISCONNECTED WIRING AND STORE IN-PLACE DURING CONSTRUCTION. AFTER NEW EQUIPMENT HAS BEEN SET-IN-PLACE CONNECT EXISTING POWER WIRING TO NEW EQUIPMENT.

5. FOR ALL NEW EQUIPMENT, ELECTRICAL CONTRACTOR SHALL IDENTIFY THE POWER SOURCE, ENSURE THE PANEL HAS THE CAPACITY TO HANDLE THE ADDITIONAL LOAD. IF AN ELECTRICAL UPGRADE IS NECESSARY, NOTIFY COR. INSTALL DEDICATED CIRCUIT BREAKER AND PROPER WIRE FOR THE EQUIPMENT. RUN CONDUIT AND WIRING THROUGH EXISTING PENETRATION. INSTALL LOCAL DISCONNECT ON EQUIPMENT.

SCOPE OF WORK:

1. DEMOLISH HEAT PUMPS, CONCRETE PADS, AND REFRIGERANT PIPING.
2. DUCTWORK RECENTLY CLEANED AND DOES NOT NEED TO BE CLEANED.
3. INSTALL NEW HEAT PUMPS. OUTDOOR UNITS SHALL BE ON NEW 3" PRECAST CONCRETE OR HPDE PAD . REFRIGERANT LINE SERVING HP-1D RUNS ALONG THE GROUND TO OPENING INTO THE BASEMENT AND THROUGH THE BASEMENT CEILING. REFRIGERANT LINE SERVING HP-2D RUNS ALONG THE GROUND TO OPENING INTO THE BASEMENT TO A RISER TO THE SECOND FLOOR. RUN NEW REFRIGERANT LINES IN EXISTING LOCATIONS. INDOOR UNITS SHALL BE INSTALLED IN EXISTING LOCATIONS. RECONNECT TO EXISTING DUCTWORK AND RUN CONDENSATION TO EXISTING DRAIN. PROVIDE NEW THERMOSTAT FOR EACH HEAT PUMP.
4. BALANCE AIR SYSTEM BASED ON THE CFMS ON THE FLOOR PLAN.
5. HEAT PUMP SHALL BE CONTROLLED BY MANUFACTURE'S INTEGRAL CONTROLS.

DESIGNED: ELS CADD ELS TECH. REVIEW: HACE DATE: APRIL 2025	SUB SHEET NO. M1.9	TITLE OF SHEET OPTION 1 MECHANICAL FLOOR PLAN GARTHRIGHT HOUSE REPLACEMENT OF HVAC SYSTEMS RICHMOND NATIONAL BATTLEFIELD PARK 3215 E. BROAD STREET, RICHMOND, VA 23223	DRAWING NO. 367 PMIS/PKG NO. 313918 SHEET 13 OF 20

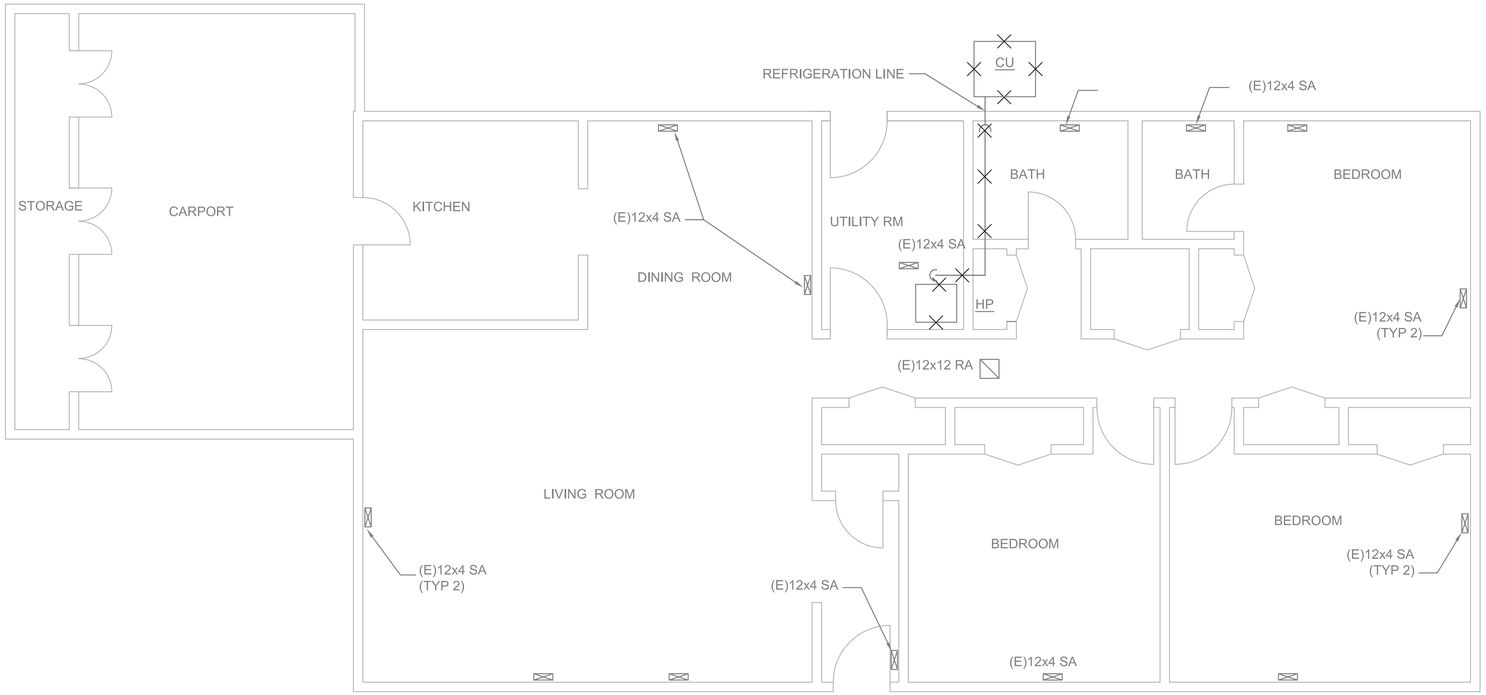

1 1910 MAINTENANCE WAY DEMO FLOOR PLAN

1/4" = 1'-0"

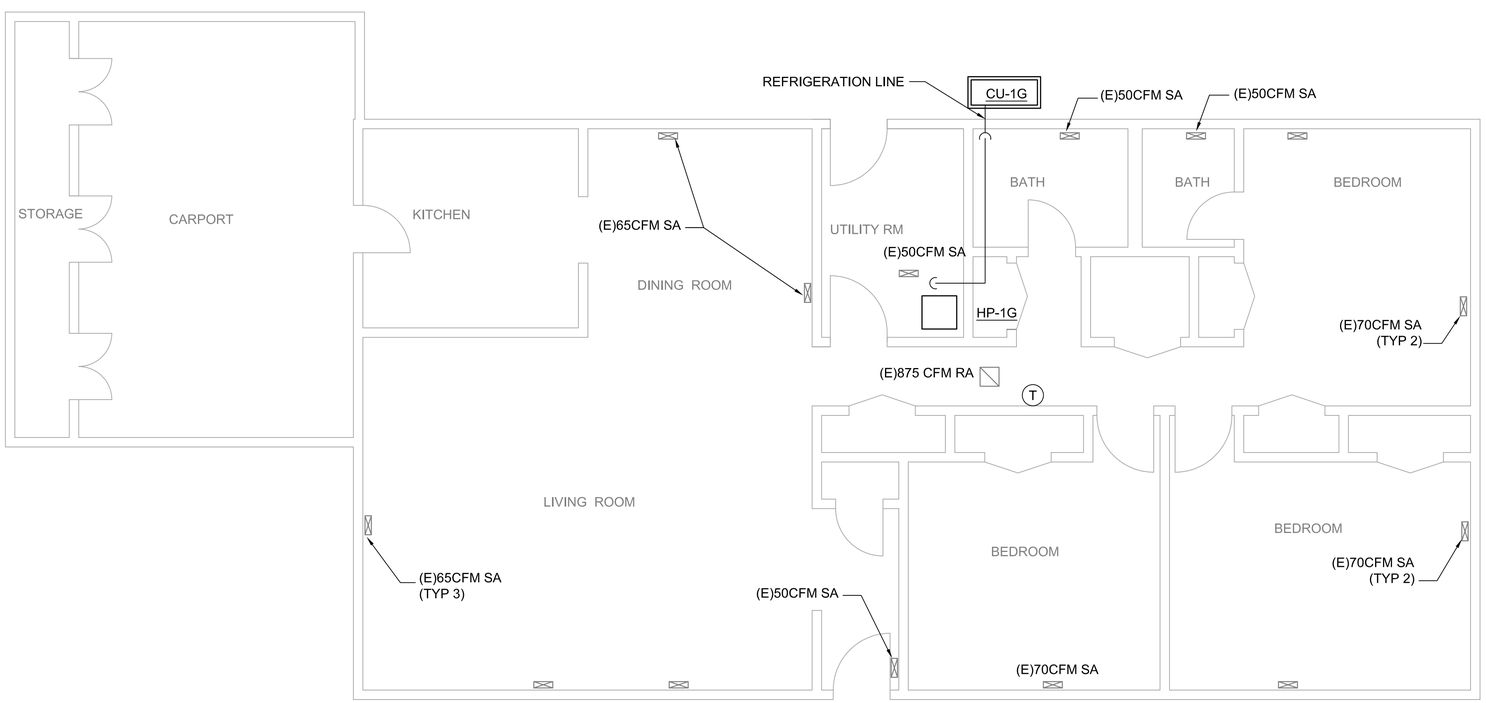

2 1910 MAINTENANCE WAY NEW WORK FLOOR PLAN

1/4" = 1'-0"

GENERAL NOTES:

1. THESE DRAWINGS ARE DIAGRAMMATIC IN NATURE AND NOT INTENDED TO SHOW ALL TRANSITIONS, OFFSETS, ETC. CONTRACTOR SHALL FIELD VERIFY EXISTING CONDITIONS AND PROVIDE ALL NECESSARY FITTINGS TO COMPLETE THE INTENT OF THE DRAWINGS. ANY DISCREPANCIES BETWEEN DRAWINGS AND FIELD CONDITIONS SHALL BE REPORTED TO THE CONTRACTING OFFICER FOR RESOLUTION. CONTRACTOR MAY LOCATE MECHANICAL EQUIPMENT DIFFERENTLY THAN SHOWN ON DRAWINGS DUE TO CONFLICTS, AS LONG AS FUNCTION AND/OR APPEARANCE ARE NOT AFFECTED.

2. ALL NEW MATERIAL, INCLUDING BUT NOT LIMITED TO DUCTWORK, PIPING, WIRING, AND HANGERS SHALL THAT PENETRATE SURFACES SHALL USE EXISTING OPENINGS WHENEVER POSSIBLE. IF NEW PENETRATIONS ARE REQUIRED OR EXISTING ONES ARE ABANDONED, USE MATERIALS THAT VISUALLY MATCH IN-PLACE ADJACENT SURFACES TO THE FULLEST EXTENT POSSIBLE. REFER TO SPECIFICATION 01 73 29 CUTTING AND PATCHING.

ELECTRICAL NOTES:

1. ALL ELECTRICAL WORK SHALL BE PERFORMED BY AN ELECTRICIAN LICENSED IN THE COMMONWEALTH OF VIRGINIA.

2. PRIOR TO THE START OF CONSTRUCTION, CONTRACTOR SHALL CONDUCT A THOROUGH ASSESSMENT OF THE EXISTING ELECTRICAL SYSTEM.ENSURE PROPOSED MECHANICAL REPLACEMENTS AND UPGRADES INTEGRATE SEAMLESSLY WITH THE CURRENT INFRASTRUCTURE. PERFORM LOAD CALCULATIONS FOR THE EXISTING ELECTRICAL SYSTEM TO ENSURE ADEQUATE POWER DISTRIBUTION. ADJUST FOR NEW LOADS OR EQUIPMENT, ENSURING THE SYSTEM CAN HANDLE THE ADDITIONAL DEMAND WITHOUT OVERLOAD.

3. ONCE EQUIPMENT AS BEEN DISCONNECTED, VERIFY THAT FEEDERS ARE DE-ENERGIZED AND DEVICES ARE OBSOLETE AND REMOVE WIRING, RACEWAY AND DEVICES. NOTIFY THE COR IF A FEEDER AND ASSOCIATED DEVICES ARE FOUND TO BE FOR EQUIPMENT THAT IS.

4. FOR EQUIPMENT BEING REPLACE IN-KIND, THE ELECTRICAL CONTRACTOR SHALL DISCONNECT POWER WIRING FROM MECHANICAL EQUIPMENT. NEATLY COIL DISCONNECTED WIRING AND STORE IN-PLACE DURING CONSTRUCTION. AFTER NEW EQUIPMENT HAS BEEN SET-IN-PLACE CONNECT EXISTING POWER WIRING TO NEW EQUIPMENT.

5. FOR ALL NEW EQUIPMENT, ELECTRICAL CONTRACTOR SHALL IDENTIFY THE POWER SOURCE, ENSURE THE PANEL HAS THE CAPACITY TO HANDLE THE ADDITIONAL LOAD. IF AN ELECTRICAL UPGRADE IS NECESSARY, NOTIFY COR. INSTALL DEDICATED CIRCUIT BREAKER AND PROPER WIRE FOR THE EQUIPMENT. RUN CONDUIT AND WIRING THROUGH EXISTING PENETRATION. INSTALL LOCAL DISCONNECT ON EQUIPMENT.

SCOPE OF WORK:

1. DEMOLISH HEAT PUMP, CONCRETE PAD, AND REFRIGERANT PIPING.
2. DUCTWORK RECENTLY CLEANED AND DOES NOT NEED TO BE CLEANED.
3. INSTALL NEW HEAT PUMP. OUTDOOR UNITS SHALL BE ON NEW 3" PRECAST CONCRETE OR HPDE PAD. REFRIGERANT LINE SERVING HP-1G RUNS ALONG THE GROUND TO OPENING INTO THE BUILDING. RUN NEW REFRIGERANT LINES IN EXISTING LOCATIONS. INDOOR UNIT SHALL BE INSTALLED IN EXISTING LOCATION. RECONNECT TO EXISTING DUCTWORK AND RUN CONDENSATION TO EXISTING DRAIN. PROVIDE NEW THERMOSTAT FOR EACH HEAT PUMP.
4. BALANCE AIR SYSTEM BASED ON THE CFMS ON THE FLOOR PLAN.
5. HEAT PUMP SHALL BE CONTROLLED BY MANUFACTURE'S INTEGRAL CONTROLS.

DESIGNED: ELS CADD ELS TECH. REVIEW: HACE DATE: APRIL 2025	SUB SHEET NO. M1.10	TITLE OF SHEET OPTION 2 MECHANICAL FLOOR PLAN QUARTERS 13, 1910 MAINTENANCE WAY REPLACEMENT OF HVAC SYSTEMS RICHMOND NATIONAL BATTLEFIELD PARK 3215 E. BROAD STREET, RICHMOND, VA 23223	DRAWING NO. 367 PMIS/PKG NO. 313918 SHEET 14 OF 20

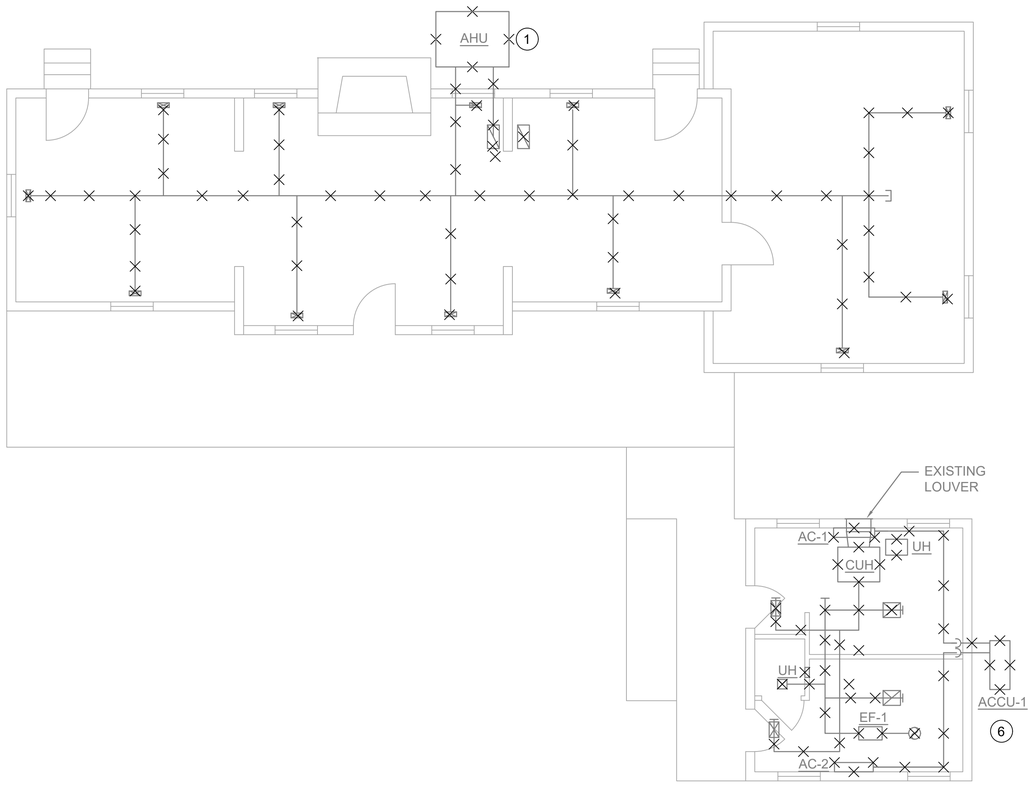

1 DEMOLITION FLOOR PLAN

3/16" = 1'-0"

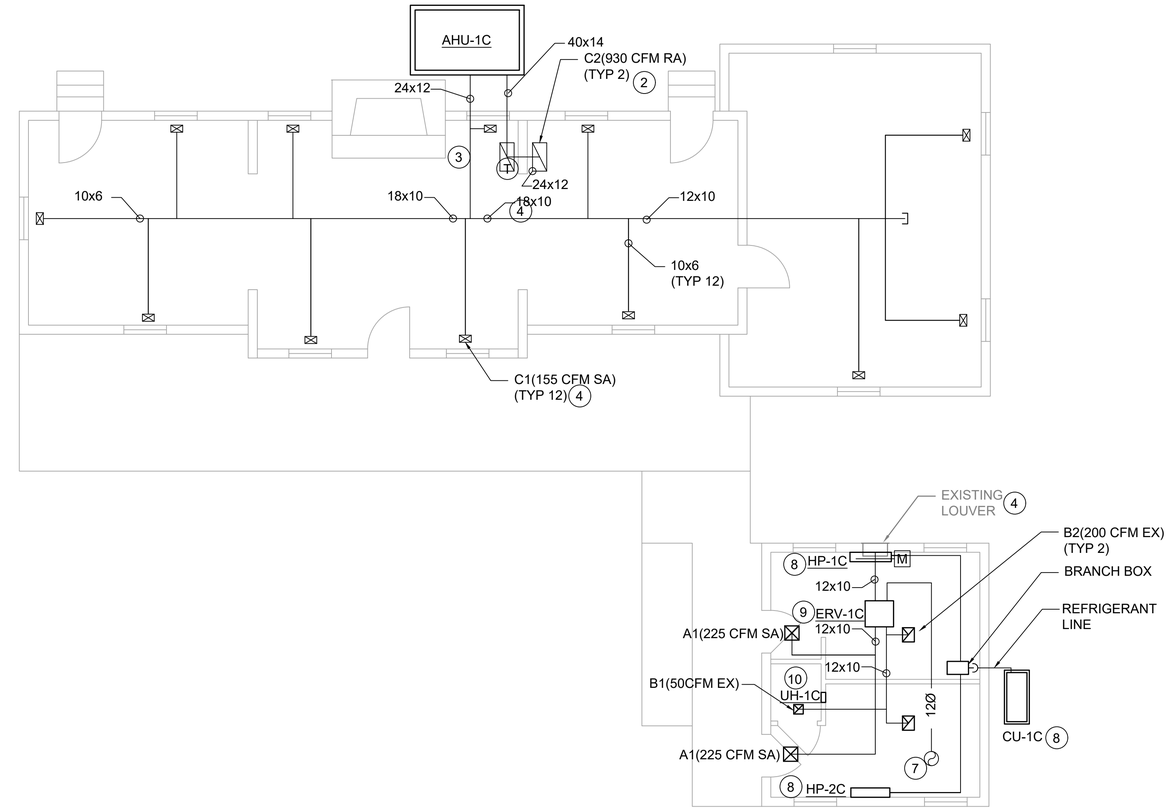

2 NEW WORK FLOOR PLAN

3/16" = 1'-0"

GENERAL NOTES:

1. THESE DRAWINGS ARE DIAGRAMMATIC IN NATURE AND NOT INTENDED TO SHOW ALL TRANSITIONS, OFFSETS, ETC. CONTRACTOR SHALL FIELD VERIFY EXISTING CONDITIONS AND PROVIDE ALL NECESSARY FITTINGS TO COMPLETE THE INTENT OF THE DRAWINGS. ANY DISCREPANCIES BETWEEN DRAWINGS AND FIELD CONDITIONS SHALL BE REPORTED TO THE CONTRACTING OFFICER FOR RESOLUTION. CONTRACTOR MAY LOCATE MECHANICAL EQUIPMENT DIFFERENTLY THAN SHOWN ON DRAWINGS DUE TO CONFLICTS, AS LONG AS FUNCTION AND/OR APPEARANCE ARE NOT AFFECTED.

2. ALL NEW MATERIAL, INCLUDING BUT NOT LIMITED TO DUCTWORK, PIPING, WIRING, AND HANGERS SHALL THAT PENETRATE SURFACES SHALL USE EXISTING OPENINGS WHENEVER POSSIBLE. IF NEW PENETRATIONS ARE REQUIRED OR EXISTING ONES ARE ABANDONED, USE MATERIALS THAT VISUALLY MATCH IN-PLACE ADJACENT SURFACES TO THE FULLEST EXTENT POSSIBLE. REFER TO SPECIFICATION 01 73 29 CUTTING AND PATCHING.

ELECTRICAL NOTES:

1. ALL ELECTRICAL WORK SHALL BE PERFORMED BY AN ELECTRICIAN LICENSED IN THE COMMONWEALTH OF VIRGINIA.

2. PRIOR TO THE START OF CONSTRUCTION, CONTRACTOR SHALL CONDUCT A THOROUGH ASSESSMENT OF THE EXISTING ELECTRICAL SYSTEM.ENSURE PROPOSED MECHANICAL REPLACEMENTS AND UPGRADES INTEGRATE SEAMLESSLY WITH THE CURRENT INFRASTRUCTURE. PERFORM LOAD CALCULATIONS FOR THE EXISTING ELECTRICAL SYSTEM TO ENSURE ADEQUATE POWER DISTRIBUTION. ADJUST FOR NEW LOADS OR EQUIPMENT, ENSURING THE SYSTEM CAN HANDLE THE ADDITIONAL DEMAND WITHOUT OVERLOAD.

3. ONCE EQUIPMENT AS BEEN DISCONNECTED, VERIFY THAT FEEDERS ARE DE-ENERGIZED AND DEVICES ARE OBSOLETE AND REMOVE WIRING, RACEWAY AND DEVICES. NOTIFY THE COR IF A FEEDER AND ASSOCIATED DEVICES ARE FOUND TO BE FOR EQUIPMENT THAT IS.

4. FOR EQUIPMENT BEING REPLACE IN-KIND, THE ELECTRICAL CONTRACTOR SHALL DISCONNECT POWER WIRING FROM MECHANICAL EQUIPMENT. NEATLY COIL DISCONNECTED WIRING AND STORE IN-PLACE DURING CONSTRUCTION. AFTER NEW EQUIPMENT HAS BEEN SET-IN-PLACE CONNECT EXISTING POWER WIRING TO NEW EQUIPMENT.

5. FOR ALL NEW EQUIPMENT, ELECTRICAL CONTRACTOR SHALL IDENTIFY THE POWER SOURCE, ENSURE THE PANEL HAS THE CAPACITY TO HANDLE THE ADDITIONAL LOAD. IF AN ELECTRICAL UPGRADE IS NECESSARY, NOTIFY COR. INSTALL DEDICATED CIRCUIT BREAKER AND PROPER WIRE FOR THE EQUIPMENT. RUN CONDUIT AND WIRING THROUGH EXISTING PENETRATION. INSTALL LOCAL DISCONNECT ON EQUIPMENT.

SCOPE OF WORK:

VISITOR CENTER

1. DEMOLISH AHU, CONCRETE PAD, AND DUCTWORK.
2. INSTALL NEW AHU. OUTDOOR UNIT SHALL MOUNTED NEW 3" PRECAST CONCRETE OR HPDE PAD.
3. PROVIDE NEW RIGID DUCTWORK IN CRAWL SPACE UNDER BUILDING THAT IS INSULATED WITH INSULATION THAT MEETS SPECIFICATION FOR DUCTWORK LOCATED EXTERIOR TO BUILDING ENVELOP.
4. PROVIDE NEW GRILLES FOR SUPPLY AND RETURN AIR. BALANCE AIR SYSTEM BASED ON THE CFMS ON THE FLOOR PLAN.
5. PROVIDE TRANE CONCIERGE SYSTEM. TIE IN AHU. HEAT PUMPS, AND ALL THERMOSTATS. LOCATED CONTROLLER IN BASEMENT MECHANICAL ROOM.

BATHROOM

6. DEMOLISH SPLIT SYSTEM, CONCRETE PAD, REFRIGERANT PIPING, DUCTWORK, DIFFUSERS, CABINET UNIT HEAT, UNIT HEATS, AND EXHAUST FAN. OUTSIDE AIR LOUVER AND EXHAUST STACK TO REMAIN.
7. CLEAN LOUVER AND EXHAUST DUCTWORK.
8. INSTALL NEW HEAT PUMP. OUTDOOR UNITS SHALL BE ON NEW 3" PRECAST CONCRETE OR HPDE PAD. THERE ARE TWO EXISTING REFRIGERANT LINES RUNNING INTO THE BUILDING. RUN NEW REFRIGERANT LINE IN EXISTING ONE OF THE LOCATIONS AND PATCH OTHER OPENING. INDOOR UNIT SHALL BE INSTALLED IN EXISTING LOCATION. RUN CONDENSATION TO EXISTING DRAIN. INSTALL BRANCH BOX IN CEILING AND PROVIDE ACCESS PANEL. THERMOSTAT SHALL BE INTERNAL TO THE UNITS.
9. PROVIDE NEW ERV IN THE LOCATED OF THE OLD CABINET UNIT HEATER. PROVIDE NEW DUCTWORK AND DIFFUSERS AS SHOWN ON THE PLANS. CONNECT TO EXISTING LOUVER AND EXHAUST STACK. PROVIDE MOTORIZED DAMPER ON INTAKE AND BACKDRAFT DAMPER ON EXHAUST. BALANCE AIR SYSTEM BASED ON THE CFMS ON THE FLOOR PLAN.
10. INSTALL NEW UNIT HEATER IN JANITOR CLOSET.
11. HEAT PUMP SHALL BE CONTROLLED BY MANUFACTURE'S INTEGRAL CONTROLS.

DESIGNED: ELS	SUB SHEET NO.	TITLE OF SHEET OPTION 3 MECHANICAL FLOOR PLAN FORT HARRISON VISITOR CENTER	DRAWING NO. 367
GADD ELS	M1.11	REPLACEMENT OF HVAC SYSTEMS RICHMOND NATIONAL BATTLEFIELD PARK 3215 E. BROAD STREET, RICHMOND, VA 23223	PMIS/PKG NO. 313918
TECH. REVIEW: HACE			SHEET 15 OF 20
DATE: APRIL 2025			

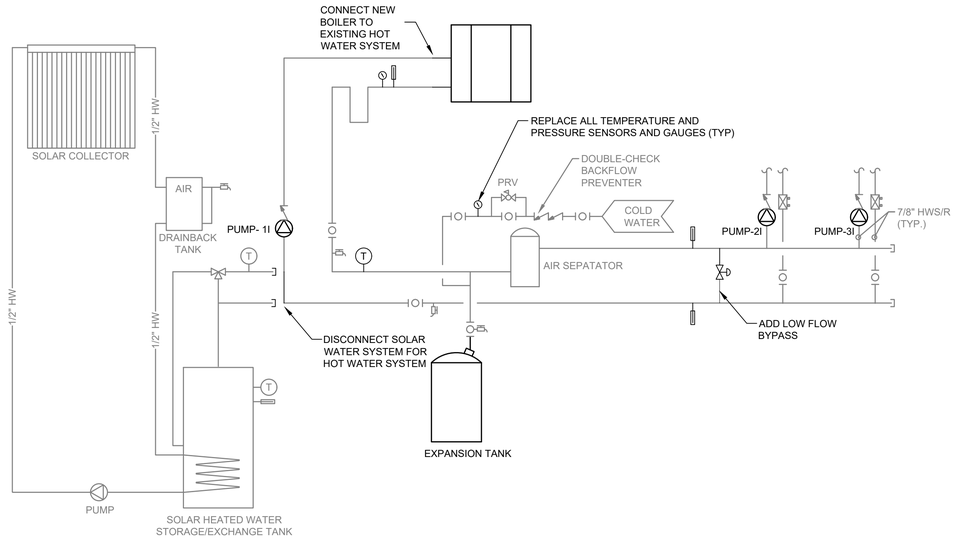

1 AUTOSHOP HOT WATER DIAGRAM

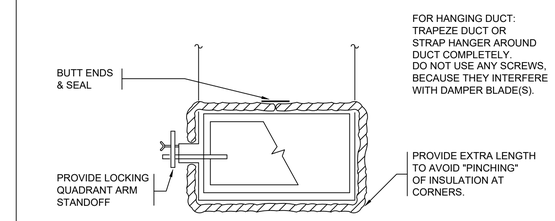

2 TYPICAL DUCT INSULATION & SUPPORTS NEAR VOLUME DAMPERS

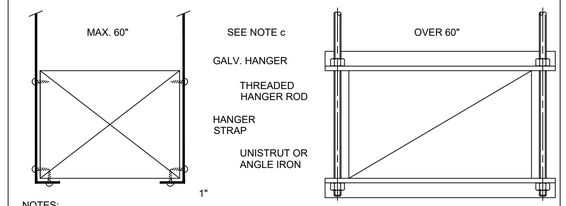

NOTES:
1. ON DUCTS OVER 48" WIDE, BOTTOM SHALL BE BRACED BY ANGLE. FOR CROSS SECTION AREA MORE THAN 8 SQ FT, DUCT SHALL BE BRACED BY ANGLES ON ALL FOUR SIDES.
2. CUTTING AND PATCHING SHALL BE LIMITED TO A MINIMUM AS REQUIRED FOR PROPER INSTALLATION.
3. SUPPORTS SHALL BE SPACED AND SIZED AS PER SMACNA.

3 DUCT HANGER SUPPORT

SCALE:

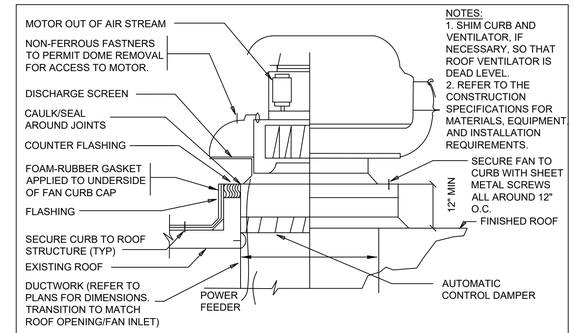

NOTES:
1. SHIM CURB AND VENTILATOR, IF NECESSARY, SO THAT ROOF VENTILATOR IS DEAD LEVEL.
2. REFER TO THE CONSTRUCTION SPECIFICATIONS FOR MATERIALS, EQUIPMENT, AND INSTALLATION REQUIREMENTS.

ROOT OPENING IN ACCORDANCE WITH MANUFACTURER'S APPROVED SHOP DRAWINGS.

6 ROOF-MOUNTED UPBLAST EXHAUST FAN

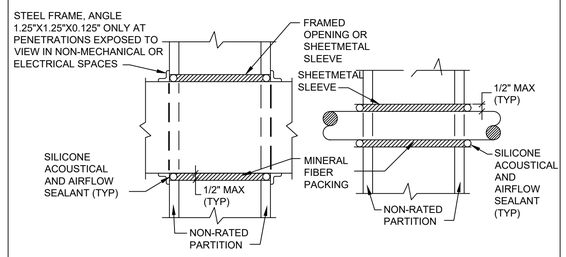

NOTES:
1. AT FIRE RATED PARTITIONS WITHOUT FIRE DAMPER, REPLACE PACKING AND SILICONE SEALANT WITH UL LISTED FIRE STOP SYSTEM. INSTALL IN ACCORDANCE WITH UL LISTING.
2. FIRE STOP DUCT PENETRATIONS THRU RATED AND NON-RATED CORRIDOR WALLS ABOVE CEILINGS.

7 DUCT PENETRATION OF FULL HEIGHT PARTITIONS

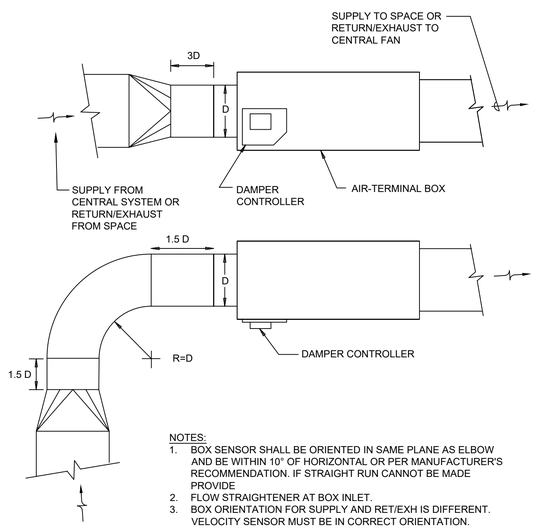

NOTES:
1. BOX SENSOR SHALL BE ORIENTED IN SAME PLANE AS ELBOW AND BE WITHIN 10° OF HORIZONTAL OR PER MANUFACTURER'S RECOMMENDATION. IF STRAIGHT RUN CANNOT BE MADE PROVIDE
2. FLOW STRAIGHTENER AT BOX INLET.
3. BOX ORIENTATION FOR SUPPLY AND RET/EXH IS DIFFERENT. VELOCITY SENSOR MUST BE IN CORRECT ORIENTATION.
4.PROVIDE SOUND ATTENUATOR AT OUTLET OF EACH SUPPLY BOX AND INLET OF EACH EXHAUST/RETURN BOX AS SCHEDULED.

4 AIR TERMINAL BOX CONNECTION (HARD DUCTED)

RADIUS ELBOW AND SPLITTER VANE REQUIREMENTS

r/w RATIO:	NO. OF VANES FOR 1 ELBOW:	NO. OF VANES WHEN 2 ELBOWS ARE WITHIN 2 EQUIV. DIA.:	
r/w >= 1.50	. . . . .	0	1
1.5 > r/w >= 0.70	. . . . .	1	2
0.7 > r/w >= 0.60	. . . . .	2	3
0.6 > r/w >= 0.55	. . . . .	3	3

EQUIVALENT DIAMETER = (w+h)/2

NOTE: r/w = 0.5 IS A SQUARE THROAT ELBOW! HOWEVER, MINIMUM INSIDE RADIUS R SHOULD BE 2".

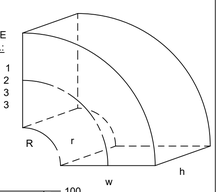

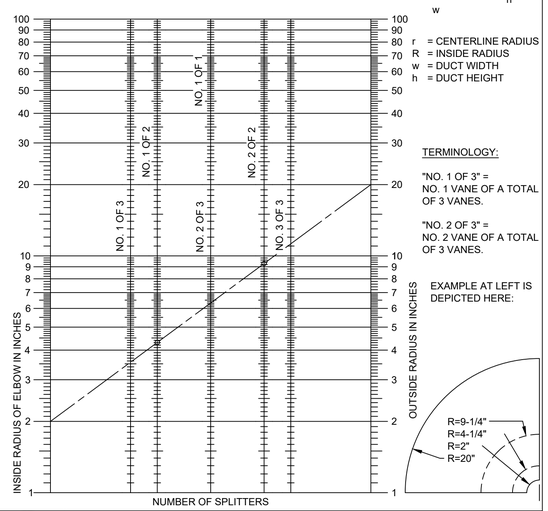

TERMINOLOGY:

"NO. 1 OF 3" = NO. 1 VANE OF A TOTAL OF 3 VANES.

"NO. 2 OF 3" = NO. 2 VANE OF A TOTAL OF 3 VANES.

EXAMPLE AT LEFT IS DEPICTED HERE:

5 SHORT RADIUS ELBOW SPLITTER VANE QUANTITY AND SPACING

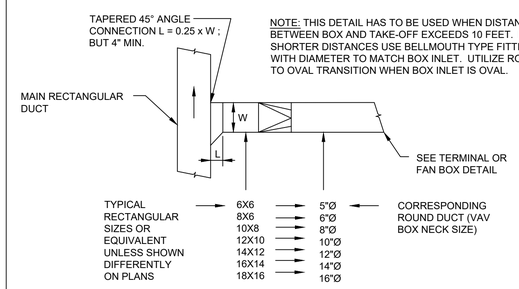

NOTE: THIS DETAIL HAS TO BE USED WHEN DISTANCE BETWEEN BOX AND TAKE-OFF EXCEEDS 10 FEET. FOR SHORTER DISTANCES USE BELLMOUTH TYPE FITTING WITH DIAMETER TO MATCH BOX INLET. UTILIZE ROUND TO OVAL TRANSITION WHEN BOX INLET IS OVAL.

8 TAKE-OFF TO SUPPLY TERMINAL BOX

SCALE:

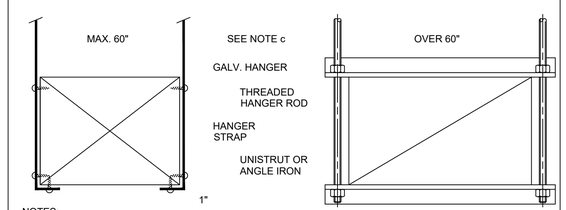

NOTES:
1. ON DUCTS OVER 48" WIDE, BOTTOM SHALL BE BRACED BY ANGLE. FOR CROSS SECTION AREA MORE THAN 8 SQ FT, DUCT SHALL BE BRACED BY ANGLES ON ALL FOUR SIDES.
2. CUTTING AND PATCHING SHALL BE LIMITED TO A MINIMUM AS REQUIRED FOR PROPER INSTALLATION.
3. SUPPORTS SHALL BE SPACED AND SIZED AS PER SMACNA.

9 DUCT HANGER SUPPORT

SCALE:

DESIGNED: ELS	SUB SHEET NO.	TITLE OF SHEET	DRAWING NO. 367
CADD ELS	M2.1	MECHANICAL DETAILS	PMIS/PKG NO. 313918
TECH. REVIEW: HACE		REPLACEMENT OF HVAC SYSTEMS RICHMOND NATIONAL BATTLEFIELD PARK 3215 E. BROAD STREET, RICHMOND, VA 23223	SHEET 16 OF 20
DATE: APRIL 2025			

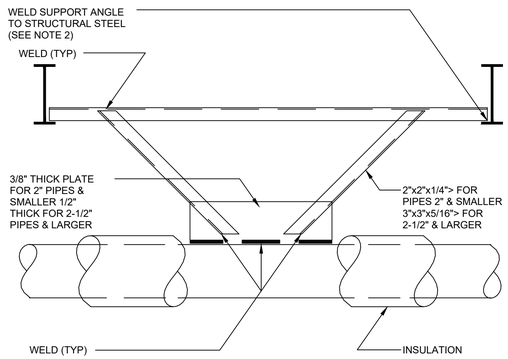

NOTES:
1. CONTRACTOR TO SUBMIT SKETCH OF PROPOSED INSTALLATION INCLUDING SIZES OF MEMBERS, WELDS, & BOLTS TO STRUCTURAL ENGINEER FOR APPROVAL.
2. WELD ENTIRE LENGTH OF SUPPORT ANGLE WHERE SUPPORT ANGLE IS RUN PARALLEL TO STRUCTURAL STEEL.

1 PIPE ANCHOR DETAIL STRUCTURAL STEEL

SCALE: NTS

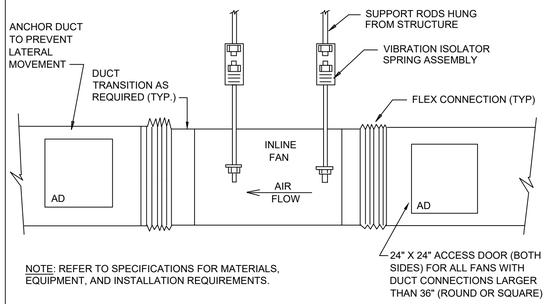

NOTE: REFER TO SPECIFICATIONS FOR MATERIALS, EQUIPMENT, AND INSTALLATION REQUIREMENTS.

2 INLINE FAN

SCALE:

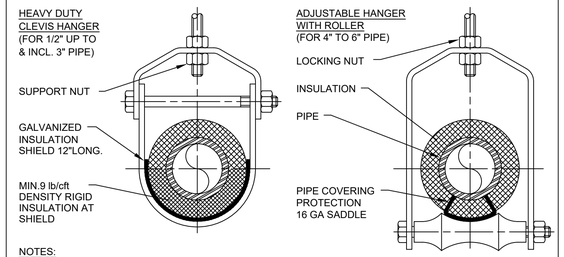

NOTES:
1. SEE SPECIFICATION FOR HANGER SIZES.
2. PIPE 8" AND LARGER SHALL HAVE ROLLER SUPPORTED WITH DUAL RODS.
3. FOR CHW SERVICE OVER 3" REPLACE SADDLE WITH 12" LONG 14 GA SHIELD WITH RIGID INSULATION BETWEEN PIPE AND SHIELD.

3 PIPE HANGER SUPPORT

SCALE:

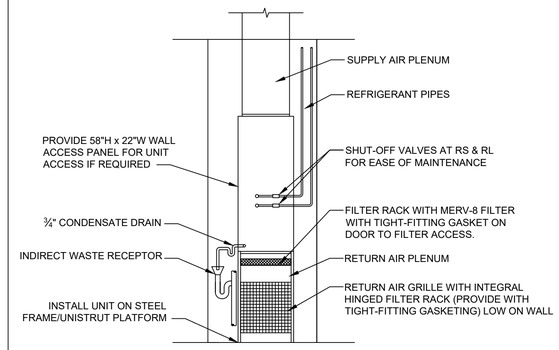

4 TYPICAL VERTICAL DUCTED HEAT PUMP DETAIL

SCALE:

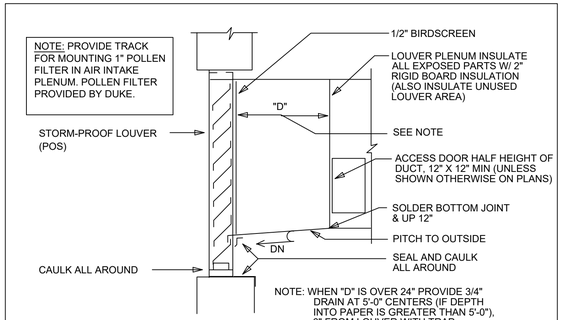

6 LOUVER CONNECTION

SCALE:

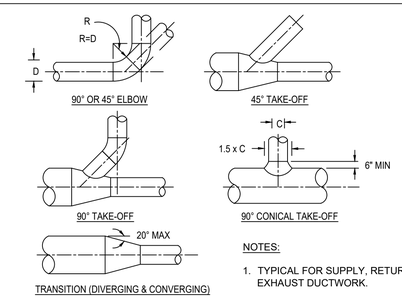

NOTES:
1. TYPICAL FOR SUPPLY, RETURN, AND EXHAUST DUCTWORK.
2. WHERE DUCT SIZE CHANGE OCCURS, TRANSITION MAY NOT BE SHOWN ON PLANS.

7 ROUND DUCT FITTING DETAIL

SCALE:

NOTES:
1. TYPICAL FOR SUPPLY, RETURN, AND EXHAUST DUCTWORK.
2. LOCATE THE CENTER OF TAKE-OFFS FROM DUCT MAINS AT THE MIDPOINT OF THE SIDE OF DUCT MAIN ("HEIGHT"/2)
3. SIZE A & B DIMENSIONS ARE PROPORTIONAL TO AIR QUANTITIES IN EACH LEG SPLIT.
4. WHERE DUCT SIZE CHANGE OCCURS, TRANSITION MAY NOT BE SHOWN ON PLANS.
5. IF W2 DOES NOT EQUAL W1, MODIFY SHAPE OF VANE EDGES TO PROJECT TANGENT PARALLEL TO DUCT SIDES.

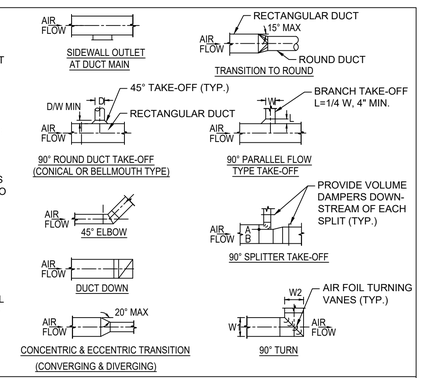

8 RECTANGULAR DUCT FITTING DETAIL

SCALE:

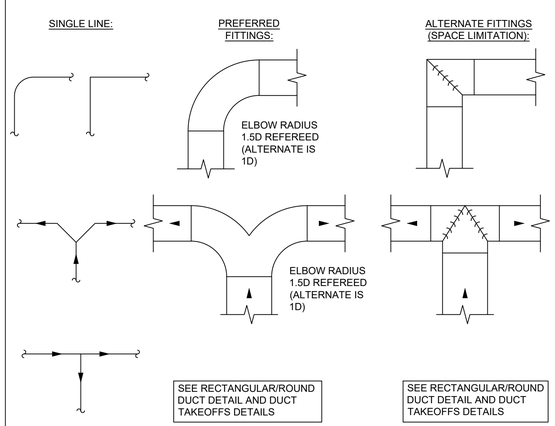

5 PIPE ANCHOR DETAIL STRUCTURAL STEEL

SCALE: NTS

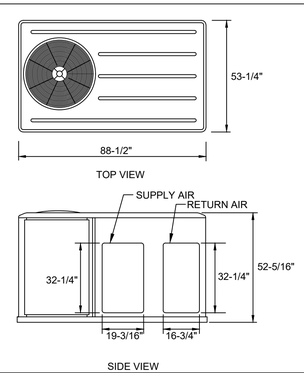

9 AHU-1C

SCALE:

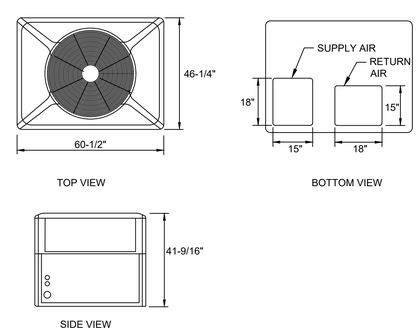

10 AHU-1A

SCALE:

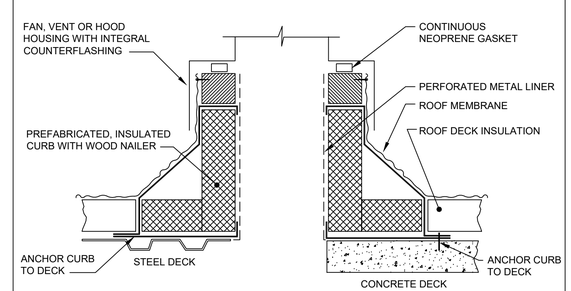

11 EQUIPMENT ROOF CURB

SCALE:

DESIGNED: ELS CADD ELS TECH. REVIEW: HACE DATE: APRIL 2025	SUB SHEET NO. M2.2	TITLE OF SHEET MECHANICAL DETAILS REPLACEMENT OF HVAC SYSTEMS RICHMOND NATIONAL BATTLEFIELD PARK 3215 E. BROAD STREET, RICHMOND, VA 23223	DRAWING NO. 367 PMIS/PKG NO. 313918 SHEET 17 OF 20

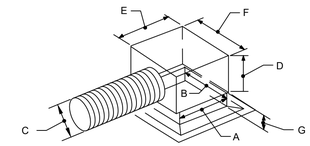

A	6"	6"	9"	9"	9"	9"	12"	12"	12"	15"
B	6"	9"	9"	9"	12"	12"	12"	12"	15"	15"
MAX CFM	120	185	265	280	325	375	470	500	625	775
C	6"Ø	8"Ø	9"Ø	10"Ø	10"Ø	12"Ø	12"Ø	14"Ø	14"Ø	16"Ø
D	8"	10"	12"	12"	12"	14"	14"	16"	16"	18"
E	10"	10"	14"	14"	14"	14"	16"	16"	16"	20"
F	10"	14"	14"	14"	16"	16"	16"	16"	20"	20"
G	6"	6"	6"	6"	6"	6"	6"	6"	6"	6"

1 DIFFUSER CONNECTION DETAIL

SCALE:

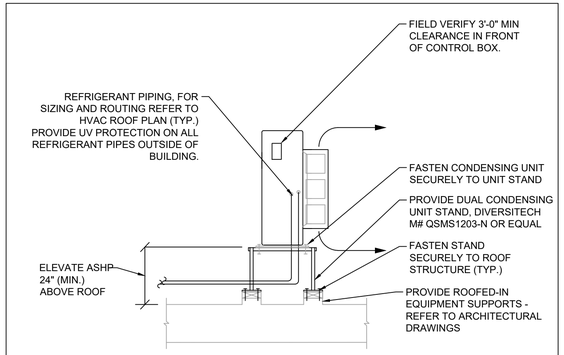

2 CONDENSING UNIT MOUNTING DETAIL

SCALE:

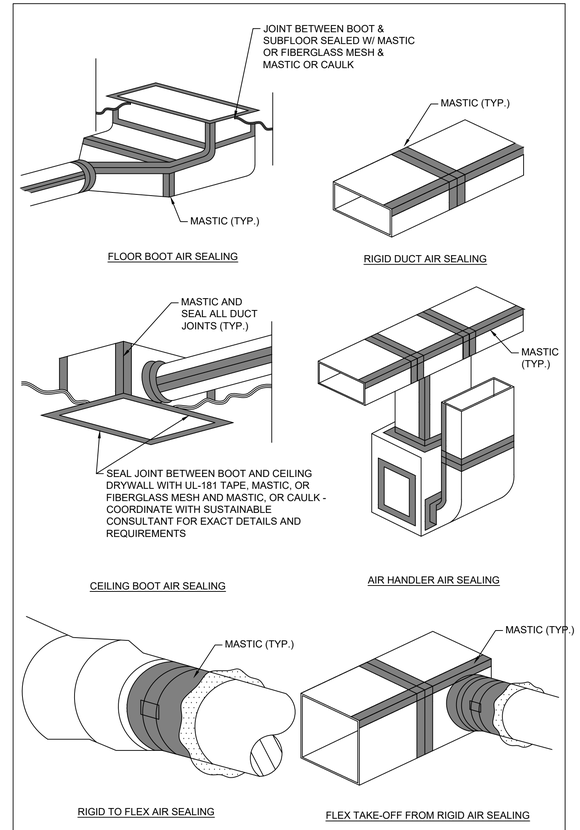

3 DUCT SEALING DETAIL

SCALE:

DESIGNED: ELS	SUB SHEET NO.	TITLE OF SHEET	DRAWING NO. 367
CADD ELS	M2.3	MECHANICAL DETAILS	PMIS/PKG NO. 313918
TECH. REVIEW: HACE		REPLACEMENT OF HVAC SYSTEMS RICHMOND NATIONAL BATTLEFIELD PARK 3215 E. BROAD STREET, RICHMOND, VA 23223	SHEET 18 OF 20
DATE: APRIL 2025			

HEAT PUMP

INDOOR UNIT																		OUTDOOR UNIT													
UNIT NO.	SERVICE	LOCATION	COOLING DATA				HEATING DATA		FAN DATA		ELECTRIC SERVICE					MANUFACTURER (AS STANDARD)	UNIT NO.	LOCATION	NOMINAL TONS	REFRIGERANT TYPE	FAN DATA		ELECTRIC SERVICE					MANUFACTURER (AS STANDARD)	REMARKS
			TOTAL MBH	SEN. MBH	INDOOR TEMP DB (°F)	INDOOR TEMP WB (°F)	TOTAL MBH	INDOOR TEMP (°F)	CFM	MOTOR WATTS	V	Ø	HZ	FLA	MCA						QTY	MOTOR WATTS	V	Ø	HZ	FLA	MCA		
HP-1A	CHIMBORAZO VISITOR CENTER	BASEMENT UTILITY ROOM	33.8	28.0	80.0	67.0	32.5	70.0	910	-	POWERED BY OUTDOOR UNIT					MITSUBISHI SVZ-KP36NA	CU-1A	GRADE	3	R410A	2	74	208/230	1	60	3.3	26	MITSUBISHI SUZ-KA36NAHZ	②③④
HP-2A	CHIMBORAZO VISITOR CENTER	LEVEL 1 W. TOILET	33.8	28.0	80.0	67.0	32.5	70.0	910	-	POWERED BY OUTDOOR UNIT					MITSUBISHI SVZ-KP36NA	CU-2A	GRADE	3	R410A	2	74	208/230	1	60	3.3	26	MITSUBISHI SUZ-KA36NAHZ	②③④
HP-1B	COLD HARBOR VISITOR CENTER	UTILITY ROOM	27.6	24.5	80.0	67.0	29.1	70.0	875	-	POWERED BY OUTDOOR UNIT					MITSUBISHI SVZ-KP30NA	CU-1B	GRADE	2.5	R410A	2	74	208/230	1	60	3.3	24	MITSUBISHI SUZ-KA30NAHZ	②③④
HP-1C	FORT HARRISON VISITOR CENTER	WOMEN'S BATHROOM	17.9	15.7	80.0	67.0	21.6	70.0	646	30	208/230	1	60	0.76	1	MITSUBISHI MSZ-GL18NA-U2	CU-1C	GRADE	3	R410A	-	-	208/230	1	60	1.2	51	MITSUBISHI MXZ-SM36NAMHZ2-U1	①②③④
HP-2C	FORT HARRISON VISITOR CENTER	MEN'S BATHROOM	17.9	15.7	80.0	67.0	21.6	70.0	646	30	208/230	1	60	0.76	1	MITSUBISHI MSZ-GL18NA-U2														
HP-1D	GARTHRIGHT HOUSE	BASEMENT UTILITY ROOM	27.6	24.5	80.0	67.0	29.1	70.0	875	-	POWERED BY OUTDOOR UNIT					MITSUBISHI SVZ-KP30NA	CU-1D	GRADE	2.5	R410A	2	74	208/230	1	60	3.3	24	MITSUBISHI SUZ-KA30NAHZ	②③④
HP-2D	GARTHRIGHT HOUSE	ATTIC	27.6	24.5	80.0	67.0	29.1	70.0	875	-	POWERED BY OUTDOOR UNIT					MITSUBISHI SVZ-KP30NA	CU-2D	GRADE	2.5	R410A	2	74	208/230	1	60	3.3	24	MITSUBISHI SUZ-KA30NAHZ	②③④
HP-1E	WATT HOUSE	LEVEL 1	24.5	19.6	80.0	67.0	24.3	70.0	735	-	POWERED BY OUTDOOR UNIT					MITSUBISHI SVZ-KP24NA	CU-1E	GRADE	2	R410A	1	74	208/230	1	60	2.4	17	MITSUBISHI SUZ-KA24NAHZ-R1	②③④
HP-2E	WATT HOUSE	ATTIC	24.5	19.6	80.0	67.0	24.3	70.0	735	-	POWERED BY OUTDOOR UNIT					MITSUBISHI SVZ-KP24NA	CU-2E	GRADE	2	R410A	1	74	208/230	1	60	2.4	17	MITSUBISHI SUZ-KA24NAHZ-R1	②③④
HP-3E	WATT HOUSE	BASEMENT	11.9	8.9	80.0	67.0	11.5	70.0	406	30	208/230	1	60	0.76	1	MITSUBISHI MSZ-GL12NA-U2	CU-3E	GRADE	2	R410A	1	74	208/230	1	60	2.4	17	MITSUBISHI SUZ-KA24NAHZ-R1	①②③④
HP-4E	WATT HOUSE	BASEMENT	11.9	8.9	80.0	67.0	11.5	70.0	406	30	208/230	1	60	0.76	1	MITSUBISHI MSZ-GL12NA-U2														
HP-5E	WATT HOUSE	LEVEL 1	11.9	8.9	80.0	67.0	11.5	70.0	406	30	208/230	1	60	0.76	1	MITSUBISHI MSZ-GL12NA-U2														
HP-1F	1900 MAINTENANCE WAY	UTILITY ROOM	27.6	24.5	80.0	67.0	29.1	70.0	875	-	POWERED BY OUTDOOR UNIT					MITSUBISHI SVZ-KP30NA	CU-1F	GRADE	2.5	R410A	2	74	208/230	1	60	3.3	24	MITSUBISHI SUZ-KA30NAHZ	②③④
HP-2F	1900 MAINTENANCE WAY	-	12.6	10.2	80.0	67.0	13.1	70.0	454	30	POWERED BY OUTDOOR UNIT					MITSUBISHI MSZ-FH12NA	CU-2F	GRADE	1	R410A	1	55	208/230	1	60	0.5	15	MITSUBISHI MUZ-FH12NAH	②③④
HP-1G	1910 MAINTENANCE WAY	UTILITY ROOM	27.6	24.5	80.0	67.0	29.1	70.0	875	-	POWERED BY OUTDOOR UNIT					MITSUBISHI SVZ-KP30NA	CU-1G	GRADE	2.5	R410A	2	74	208/230	1	60	3.3	24	MITSUBISHI SUZ-KA30NAHZ	②③④
HP-1H	MAINTENANCE BUILDING	MECHANICAL ROOM	47.3	33.6	80.0	67.0	52.1	70.0	1400	430	208/230	1	60	4.5	5.63	MITSUBISHI PVFY-P48NAMU-E1	CU-1H	GRADE	4	R410A	2	(2) 74	208/230	1	60	-	36	MITSUBISHI PUMY-HP48NKMU1	②③④
HP-2H	MAINTENANCE BUILDING	ATTIC	47.3	33.6	80.0	67.0	52.1	70.0	1400	430	208/230	1	60	4.5	5.63	MITSUBISHI PVFY-P48NAMU-E1	CU-2H	GRADE	4	R410A	2	(2) 74	208/230	1	60	-	36	MITSUBISHI PUMY-HP48NKMU1	②③④
HP-3H	MAINTENANCE BUILDING	STORAGE ROOM	17.9	15.7	80.0	67.0	21.6	70.0	646	30	208/230	1	60	0.76	1	MITSUBISHI MSZ-GL18NA-U2	CU-3H	GRADE	3	R410A	-	-	208/230	1	60	2.43	42	MITSUBISHI MXZ-4C36NAHZ2-U1	①②③④
HP-4H	MAINTENANCE BUILDING	STORAGE ROOM	17.9	15.7	80.0	67.0	21.6	70.0	646	30	208/230	1	60	0.76	1	MITSUBISHI MSZ-GL18NA-U2														
HP-1I	AUTO SHOP BUILDING	OFFICE	6.3	5.9	80.0	67.0	8.4	70.0	437	-	POWERED BY OUTDOOR UNIT					MITSUBISHI MSZ-FH06NA	CU-1I	GRADE	0.5	R410A	1	55	208/230	1	60	0.5	11	MITSUBISHI MUZ-FH06NAH	②③④

1. PROVIDE BRANCH BOX, MODEL PAC-MKA32BC, ELEC 208/230-1-60
2. PROVIDE UNIT MOUNTED DISCONNECT SWITCH.
3. PROVIDE THERMOSTATIC EXPANSION VALVE KIT
4. WALL MOUNTED CONTROLLER (HARD WIRED)

SINGLE PACKAGED HEAT PUMP

UNIT NO.	SERVICE	LOCATION	CFM	REFRIG.	COOL MBH TOT	COOL MBH SEN	HEAT MBH	OUTDOOR COIL		INDOOR COIL		OUTDOOR FAN DATA					INDOOR FAN DATA						EER/SEER	FILTER	ELECTRIC SERVICE					MANUFACTURER (AS STANDARD)	REMARKS
								ROW	FPI	ROW	FPI	DIA.	CFM	RPM	DRIVE	MOTOR HP	DIA.	CFM	ESP	RPM	DRIVE	MOTOR HP			V	Ø	HZ	FLA	MCA		
AHU-1A	CHIMBORAZO VISITOR CENTER	ROOF	1780	R-410A	58	58	56	2	24	4	15	28.3	5500	825	DIRECT	1/3	11x10	1835	-	1050	DIRECT/ VARIABLE	1	14/16	2" FILTER FRAME	208-230	1	60	6.9	-	TRANE 5WCZ5060A1	①③④⑤
AHU-1C	FORT HARRISON VISITOR CENTER	ON GRADE	1860	R-454B	73	52	70	-	-	-	-	-	-	-	DIRECT	-	-	1860	1.0	971	DIRECT/ VARIABLE	3	11/-	2" FILTER FRAME	208-230	3	60	3.3/8.8	38	TRANE WSK072A3S00	②③④⑤

1. PROVIDE BOTTOM DUCT OPENINGS.
2. PROVIDE BACK DUCT OPENINGS.
3. PROVIDE UNIT MOUNTED DISCONNECT SWITCH.
4. PROVIDE THERMOSTATIC EXPANSION VALVE KIT
5. PROVIDE UNIT CONTROLLER

BOILER SCHEDULE

UNIT NO.	SERVICE	LOCATION	OUTPUT CAPACITY (MBH)	INPUT CAPACITY (MBH)	TURN DOWN	FUEL INLET PRESSURE GAS "W.C.	OPER. PRESS (PSIG)	WATER					AIR		ELECTRIC SERVICE				MANUFACTURER (AS STANDARD)	REMARKS
								GPM	EWT (°F)	LWT (°F)	MAX P.D. (FT)	% GLYCOL	AIR INLET	VENT SIZE	AMP	V	Ø	HZ		
B-1I	AUTO SHOP BUILDING	MECHANICAL ROOM	113.4	140	10:1	4-14"	60	6	80	130	13	0	3"	3"	12	120	1	60	VIESSMANN VITODENS 100-W B1HE-150	①

1. PROVIDE NEUTRALIZATION KIT

PUMP SCHEDULE

UNIT NO.	SERVICE	LOCATION	CASING TYPE	FLUID		GPM	HEAD (FT.)	SHUT-OFF HEAD (FT.)	IMPELLER SIZE (IN.)	WORKING PRESS. (PSIG)	PUMP RPM	BHP	MOTOR HP	VFD	ELECT. SERVICE			MANUFACTURER MODEL NUMBER (AS STANDARD)	REMARKS
				TYPE	TEMP										VOLTS	PHASE	HZ		
P-1	CHILLED WATER	MECHANICAL ROOM	INLINE	WATER	45°F	85	42	44	6.7	125	1750	1.53	2	Y	208	3	60	TACO 1941	①②
P-2	CHILLED WATER	MECHANICAL ROOM	INLINE	WATER	45°F	85	42	44	6.7	125	1750	1.53	2	Y	208	3	60	TACO 1941	①②

1. PROVIDE DISCONNECT SWITCH
2. PROVIDE VFD

ENERGY RECOVERY UNIT SCHEDULE

UNIT NO.	SERVICE	LOCATION	FAN DATA				ELECTRIC SERVICE					MANUFACTURER (AS STANDARD)	REMARKS
			CFM	ESP	DRIVE	MOTOR WATTS	V	Ø	HZ	FLA	MCA		
ERV-1C	FORT HARRISON VISITOR CENTER	WOMENS BATHROOM	450	0.7	EC	170	208	1	60	1.16	2.6	RENEW AIRE HE 07	①

1. PROVIDE 8"Ø BACK DRAFT DAMPER, 3 kW ELECTRIC DUCT HEATER, MERV 13 INTAKE FILTERS, MER 8 RETURN FILTERS

ELECTRIC UNIT HEATER SCHEDULE

UNIT NO.	SERVICE	LOCATION	FAN DATA				ELECTRIC SERVICE					MANUFACTURER (AS STANDARD)	REMARKS
			CFM	ESP	EAT (°F)	LAT (°F)	kW	AMPS	V	Ø	HZ		
UH-1	FORT HARRISON VISITOR CENTER	JANITOR CLOSET	65	FREE DISCHARGE	60	85	1.5	12.5	120	1	60	BERKO CZ1512T	①

1. PROVIDE 1" MERV 8 FILTERS AND DISCONNECTS SWITCH

LOUVER SCHEDULE

UNIT NO.	SERVICE	LOCATION	CFM	SIZE	FREE AREA (SF)	MATERIAL	MANUFACTURER (AS STANDARD)	REMARKS
L-1B	COLD HARBOR VISITOR CENTER	EXTERIOR	300	12x12	1	ALUMINUM	GREENHECK ESD-403	①②③

1. COLOR TO BE SPECIFIED BY ARCHITECT.
2. PROVIDE WITH CORROSION-PROOF BIRDSCREEN.
3. PROVIDE WITH BACKDRAFT DAMPER.

TERMINAL BOX SCHEDULE

UNIT NO.	SELECTION RANGE (CFM)	MINIMUM CONTROL SETPOINT (CFM)	VALVE INLET DIAMETER (IN)	DISCHARGE SIZE WXH	MAX PD INCL RHC (IN. WG)	MANUFACTURER MODEL NUMBER (BASIS OF DESIGN)	REMARKS
VV-1	45-195	45	4"Ø	12X8	.01	PRICE SDV	①
VV-2	195-305	70	5"Ø	12X8	.01	PRICE SDV	①
VV-3	305-440	100	6"Ø	12X8	.01	PRICE SDV	①
VV-4	440-790	175	8"Ø	12X10	.01	PRICE SDV	①

1.

AIR INLET AND OUTLET SCHEDULE

UNIT NO.	NECK SIZE	AIR FLOW RANGE (CFM)	SERVICE	MOUNTING	STATIC PRESSURE	MAX NC LEVEL	MANUFACTURER MODEL NUMBER (BASIS OF DESIGN)	REMARKS
A1	8Ø	0-250	SUPPY	12x12 LAY-IN	0.1	25	PRICE SCD	
B1	8x8	0-100	RETURN/EXHAUST	CEILING	0.01	20	PRICE 630	
B2	12x10	0-250	RETURN/EXHAUST	CEILING	0.01	20	PRICE 630	
B3	20x20	0-600	RETURN/EXHAUST	SIDEWALL	0.01	20	PRICE 630	
C1	10x6	150-200	SUPPLY	FLOOR	0.1	25	PRICE LPB	①
C2	24x12	275-1000	RETURN	FLOOR	0.1	25	PRICE LBMH	①

1. PROVIDE CORE 15B, 0° DEFLECTION

DESIGNED: ELS	SUB SHEET NO.	TITLE OF SHEET	DRAWING NO. 367
CADD ELS	M3.1	MECHANICAL SCHEDULES	PMIS/PKG NO. 313918
TECH. REVIEW: HACE		REPLACEMENT OF HVAC SYSTEMS RICHMOND NATIONAL BATTLEFIELD PARK 3215 E. BROAD STREET, RICHMOND, VA 23223	SHEET 19 OF 20
DATE: APRIL 2025			

FAN SCHEDULE

UNIT NO.	SERVICE	LOCATION	CFM	FAN TYPE	E.S.P. (IN. W.G.)	WHEEL			FAN		FAN MOTOR HP(W)	ELECTRIC SERVICE				MANUFACTURER MODEL NUMBER (AS STANDARD)	REMARKS
						DIA. (IN)	TYPE	DRIVE	RPM	BHP		V	Ø	HZ	FLA		
EF-1A	CHIMBORAZO VISITOR CENTER	BASEMENT BATHROOM	150	CEILING CABINET	0.125	-	CENTRIFUGAL	DIRECT	900	0.01	(18)	115	1	60	0.16	GREENHECK SP-B200	1 2 4
EF-1B	COLD HARBOR VISITOR CENTER	CEILING PLENUM	300	INLINE	0.25	-	CENTRIFUGAL	DIRECT	1438	0.04	1/6	115	1	60	-	GREENHECK SQ-80-VG	1 2 3
EF-1,2,3H	MAINTENANCE BUILDING	ROOF	200	UPBLAST	0.1	-	CENTRIFUGAL	DIRECT	1251	0.03	1/10	115	1	60	-	GREENHECK CUE-080-VG	1 2 3
EF-1I	AUTO SHOP BUILDING	BATHROOM	75	CEILING CABINET	0.125	-	CENTRIFUGAL	DIRECT	900	0.01	(18)	115	1	60	0.16	GREENHECK SP-B80	1 2 4
EF-2I	AUTO SHOP BUILDING	MAIN. BAY	1000	VEHICLE EXTRACTOR	4.5	-	CENTRIFUGAL	DIRECT	3450	-	2	208-230	1	60	-	PLYMOVENT FUA-3000	1 2 4 6
EF-3I	AUTO SHOP BUILDING	MAIN. BAY	2500	INLINE	0.3	-	CENTRIFUGAL	DIRECT	986	0.34	3/4	115	1	60	10	GREENHECK SQ-10-VG	1 2 3 5

1. PROVIDE UNIT MOUNTED DISCONNECT SWITCH
2. PROVIDE INTEGRAL BACKDRAFT DAMPER
3. PROVIDE EC MOTOR
4. CONTROL WITH LOCAL SWITCH
5. CONTROL WITH ON/AUTO SWITCH.
6. PROVIDE SEALED CONNECTION GRABBER, FLEX EXHAUST HOSE, AND RETRACTABLE HOSE DROPPER.

PACKAGED TERMINAL AIR CONDITIONER SCHEDULE

UNIT NO.	SERVICE	LOCATION	CFM	REFRIG.	COOL MBH	HEAT MBH	EER	ELECTRIC SERVICE					MANUFACTURER (AS STANDARD)	REMARKS
								V	Ø	HZ	FLA	MCA		
PTAC-1I	AUTO SHOP	OFFICE	-	R32	7.0	-	12.4	208-230	1	60	-	-	AMANA PTC 073J	1 2 3

1. PROVIDE WALL SLEEVE AND CONDENSATE DRAIN KIT
2. PROVIDE WITH CORD AND PLUG. COORDINATE WITH ELECTRICAL CONTRACTOR
3. INSTALL IN EXISTING OPENING

AIR CLEANER SCHEDULE

UNIT NO.	SERVICE	LOCATION	CFM	FAN TYPE	WEIGHT (LB)	MOTOR HP(W)	ELECTRIC SERVICE				MANUFACTURER MODEL NUMBER (AS STANDARD)	REMARKS
							V	Ø	HZ	AMP		
CL-1I	AUTO SHOP	MAIN. BAY	3000	INLINE	180	3/4	115	1	60	10.2	BLUE OX OX3000-CF	1

1. PROVIDE UNIT DISCONNECT SWITCH IN ACCESSIBLE LOCATION
2. CONTROL WITH LOCAL SWITCH

PUMP SCHEDULE

UNIT NO.	SERVICE	LOCATION	CASING TYPE	FLUID		GPM	HEAD (FT.)	SHUT-OFF HEAD (FT.)	PUMP RPM	BHP	POWER INPUT (W)	ELECT. SERVICE			MANUFACTURER MODEL NUMBER (AS STANDARD)	REMARKS
				TYPE	TEMP							VOLTS	PHASE	HZ		
P-1I	AUTO SHOP BOILER	MECHANICAL ROOM	INLINE	WATER	130°F	6	10	11.5	-	-	84	120	1	60	GRUNDFOS UPS 15-35 SFC	1
P-2I	AUTO SHOP RAD FLOOR	MECHANICAL ROOM	INLINE	WATER	130°F	3	8	10	-	-	87	120	1	60	GRUNDFOS UP 15-29 SU	1
P-3I	AUTO SHOP RAD FLOOR	MECHANICAL ROOM	INLINE	WATER	130°F	3	8	10	-	-	87	120	1	60	GRUNDFOS UP 15-29 SU	1

1. PROVIDE DISCONNECT SWITCH

DESIGNED: ELS	SUB SHEET NO.	TITLE OF SHEET	DRAWING NO. 367
CADD ELS	M3.2	MECHANICAL SCHEDULES	PMIS/PKG NO. 313918
TECH. REVIEW: HACE		REPLACEMENT OF HVAC SYSTEMS RICHMOND NATIONAL BATTLEFIELD PARK 3215 E. BROAD STREET, RICHMOND, VA 23223	SHEET 20 OF 20
DATE: APRIL 2025			