COCONINO NATIONAL FOREST

RED ROCK RANGER STATION

PROJECT LOCATION

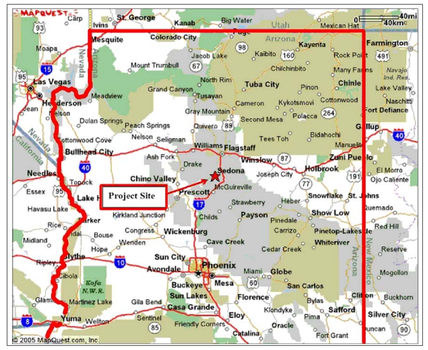

STATE OF ARIZONA

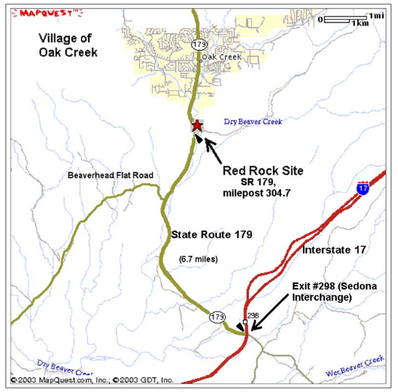

PROJECT VICINITY MAP

PROJECT DIRECTORY

OWNER:
U.S.D.A. FOREST SERVICE
BEN S. MARTINEZ, U.S.D.A. SOUTHWESTERN REGIONAL HEADQUARTERS
333 BROADWAY, S.E.
ALBUQUERQUE, NEW MEXICO 87102
TELE: 1-505-842-3854, BSMARTINEZ@FS.FED.US

CONTRACTING OFFICER'S REPRESENTATIVE:
DOUG DENK, FACILITIES ENGINEER
COCONINO/KAIBAB NATIONAL FORESTS
1824 S. THOMPSON STREET, FLAGSTAFF, ARIZONA 86001, TELE: 1-928-527-3599, FAX: 1-928-527-3620, DDENK@FS.FED.US

ARCHITECT:
U.S.D.A. FOREST SERVICE
BILL CARLSON, U.S.D.A. SOUTHWESTERN REGIONAL HEADQUARTERS, 333 BROADWAY, SE, ALBUQUERQUE, NEW MEXICO 87102, TELE: 1-505-842-3833, FAX: 1-505-842-3150, BILLCARLSON@FS.FED.US

MECHANICAL:
SCHWIMMER ENGINEERS, INC. 5055 RAY ROAD, SUITE 20, CHANDLER, ARIZONA 85226, TELE: 1-480-968-6440, FAX: 1-480-968-6108, ENGINEER@SCHWIMMERAz.COM

ELECTRICAL:
POLYPHASE ENGINEERING, 14469 N. 54TH PLACE, SCOTTSDALE, ARIZONA 85254, TELE: 1-602-569-0668, FAX: 1-480-452-0742, JACK@E-POLYPHASE.COM

STRUCTURAL:
STRUCTURAL DESIGN ASSOCIATES, I. ANDREW LEONARD, P.E., 540 CHAMA, NE, SUITE 8, ALBUQUERQUE, NEW MEXICO 87108, TELE: 1-505-255-9499, FAX: 1-505-255-9599, ANDYL@SWCP.COM

CIVIL ENGINEERING:
R.S. ENGINEERING, 140 NORTH TUCSON BLVD., TUCSON, ARIZONA 85716, TELE: 1-520-791-3933, FAX: 1-520-791-9405, WWW.RSENGINEERING.COM

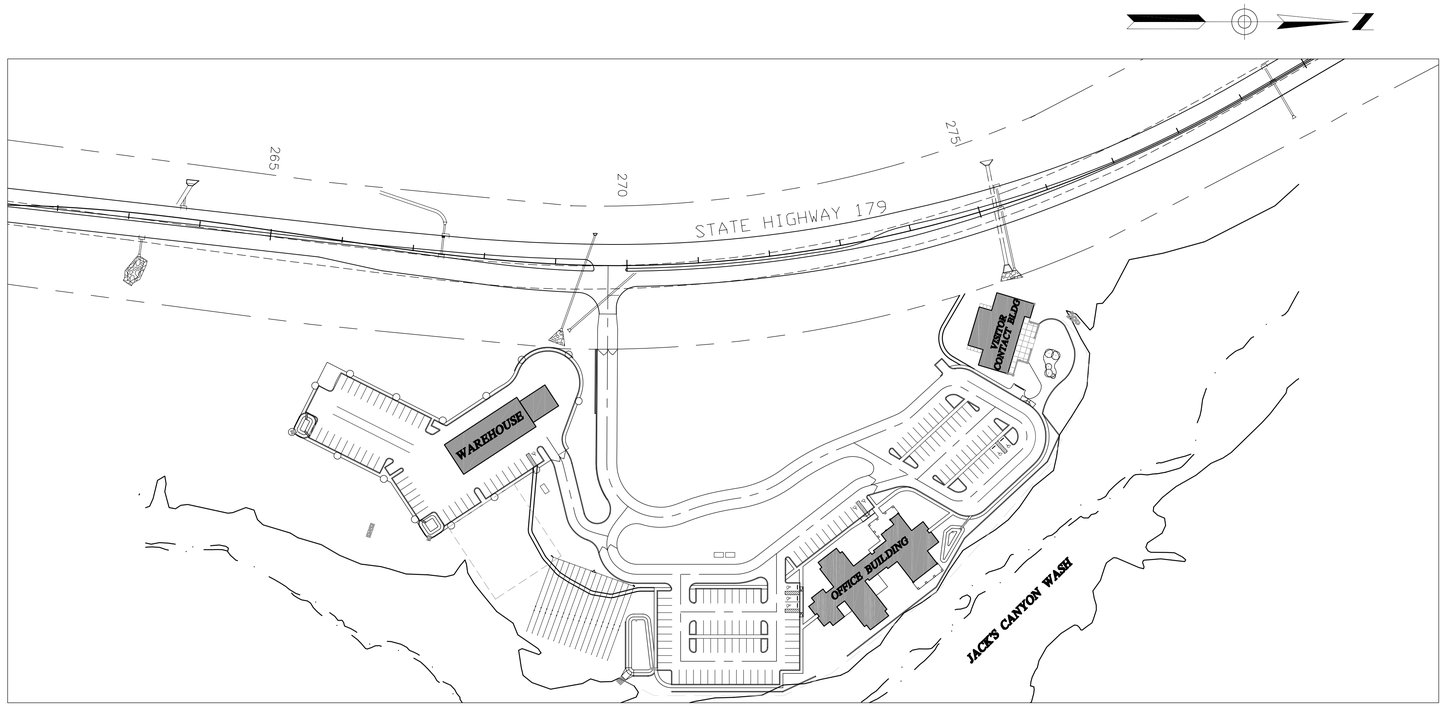

SITE PLAN

1" = 100'

Two working days before you dig
CALL FOR THE BLUESTAKES
1-800-782-5348
Blue Stake Center

ISSUES & REVISIONS

REV. #	DATE	DESCRIPTION	INIT.

JUNE 1, 2006

U.S. DEPARTMENT OF AGRICULTURE
FOREST SERVICE
R-3
SOUTHWESTERN REGION

APPROVED BY:

REGIONAL ENGINEER DATE

RECOMMENDED BY:

FOREST SUPERVISOR DATE

DISTRICT RANGER DATE

FOREST ENGINEER DATE

Forest: COCONINO NATIONAL FOREST

PROJECT: RED ROCK RANGER STATION

Sheet Title: COVER SHEET

Scale: AS SHOWN

Sheet: T0.1

RED ROCK RANGER STATION
INDEX TO DRAWINGS

T0.1 COVER SHEET
T0.2 INDEX TO DRAWINGS

C2 CIVIL GENERAL NOTES
C3 CIVIL SITE PLAN
C4 GRADING PLAN
C5 HORIZONTAL CONTROL
C6 BANK PROTECTION PLANS
C7 CIVIL DETAILS/TYPICAL SECTIONS
C8 BASIN DETAILS
C9 STORM DRAIN DETAILS
C10 STORM DRAIN DETAILS
C11 GATE DETAILS
C12 GATE DETAILS
C13 GATE DETAILS
C14 SIGNING/STRIPING PLAN
C15 UTILITY PLAN
C16 SEPTIC SEWER SYSTEM
C17 SEPTIC SEWER SYSTEM
C18 SWPPP
C19 SWPPP DETAILS
C20 DEMOLITION/SALVAGE PLANS

CS1 CIVIL CROSS SECTIONS
CS2 CIVIL CROSS SECTIONS
CS3 CIVIL CROSS SECTIONS
CS4 CIVIL CROSS SECTIONS
CS5 CIVIL CROSS SECTIONS
CS6 CIVIL CROSS SECTIONS
CS7 CIVIL CROSS SECTIONS

LA0.0 PROPOSED FINISH CONTOUR SITE PLAN
LA1.0 OVERALL SITE PLANTING PLAN
LA1.1 WAREHOUSE BUILDING PLANTING PLAN
LA1.2 OFFICE BUILDING PARKING PLANTING PLAN
LA1.3 OFFICE BUILDING PLANTING PLAN
LA1.4 VISITOR CONTACT BUILDING PARKING PLANTING PLAN
LA1.5 VISITOR CONTACT BUILDING PLANTING PLAN
LA2.0 LANDSCAPING DETAILS
LA2.1 FOREST SERVICE ADMINISTRATIVE SITE SIGN DETAILS

S0.1 GENERAL STRUCTURAL NOTES ALL BUILDINGS
S1.1 FOUNDATION PLAN - OFFICE BLDG
S1.2 FOUNDATION PLAN - VISITOR CONTACT BLDG
S1.3 FOUNDATION PLAN - WAREHOUSE
S2.1 ROOF FRAMING PLAN - OFFICE BLDG
S2.2 ROOF FRAMING PLAN - VIS CONTACT BLDG
S2.3 ROOF FRAMING PLAN - WAREHOUSE
S3.1 FOUNDATION DETAILS
S3.2 SITE RETAINING WALLS
S4.1 ROOF FRAMING PRE-FAB WOOD TRUSS DTLS
S4.2 ROOF FRAMING DETAILS HEAVY TIMBER TRUSS - OFFICE BLDG
S4.3 ROOF FRAMING DETAILS HEAVY TIMBER TRUSS - VISITOR CONTACT
S4.4 ROOF FRAMING DETAILS STEEL BEAM AND COLUMN CONNECTIONS
S4.5 ROOF FRAMING DETAILS STEEL BEAM AND COLUMN CONNECTIONS
S4.6 ROOF FRAMING DETAILS STEEL BEAM AND COLUMN CONNNECTIONS
S4.7 TYPICAL WALL FRAMING DETAILS

A2.1 WAREHOUSE FLOOR PLAN, SCHEDULES AND DETAILS
A2.2 ARCHITECTURAL FLOOR PLAN - OFFICE BLDG
A2.3 ARCHITECTURAL DIMENSIONED FLOOR PLAN - OFFICE BUILDING
A2.4 ARCHITECTURAL FLOOR PLAN AND WALL DETAILS - VISITOR CONTACT BLDG
A2.5 DIMENSIONED FLOOR PLAN AND DETAILS - VISITOR CONTACT BUILDING
A2.6 REFLECTED CEILING AND ROOF PLANS - WAREHOUSE BUILDING
A2.7 REFLECTED CEILING PLAN, DRAFTSTOPS AND DETAILS - OFFICE BUILDING
A2.8 ROOF PLAN - OFFICE BUILDING
A2.9 REFLECTED CEILING AND ROOF PLANS - VISITOR CONTACT BUILDING
A3.1 EXTERIOR AND INTERIOR ELEVATIONS - WAREHOUSE BUILDING
A3.2 EXTERIOR ELEVATIONS - OFFICE BUILDING
A3.3 EXTERIOR ELEVATIONS - VIS CONTACT BLDG
A3.4 BUILDING SECTIONS, PLANS AND DETAILS - WAREHOUSE BUILDING
A3.5 BUILDING SECTIONS - OFFICE BUILDING
A3.6 BUILDING SECTIONS - OFFICE BUILDING
A3.7 BUILDING SECTIONS - VISITOR CONTACT BLDG
A4.1 TYPICAL WALL SECTIONS - WAREHOUSE BLDG
A4.2 TYPCIAL WALL SECTIONS AND DETAILS - OFFICE BUILDING
A4.3 WALL SECTIONS AND DETAILS - V.C. BLDG
A5.1 INTERIOR ELEVATIONS - OFFICE BUILDING
A5.2 INTERIOR ELEVATIONS - OFFICE BUILDING
A5.3 INTERIOR ELEVATIONS - OFFICE BUILDING
A5.4 INTERIOR ELEVATIONS - OFFICE BLDG
A5.5 INTERIOR ELEVATIONS - OFFICE BLDG
A5.6 INTERIOR ELEVATIONS - VIS CONTACT BLDG
A5.7 INTERIOR ELEVATOINS - VIS CONTACT BLDG
A6.1 ENLARGED FLOOR PLANS - OFC BLDG
A6.2 SAFE/STOR. SECTIONS, RECEPTION DESK SECTIONS & DOOR JAMB DETAILS
A6.3 SCHEDULES - OFFICE BUILDING
A6.4 ENLARGED TOILET FLOOR PLANS AND DETAILS - VISITOR CONTACT BLDG
A6.5 ROOM FINISH, DOOR AND WINDOW SCHEDULES - VISITOR CONTACT BLDG

P0.1 PLUMBING SITE PLAN
P1.1 WAREHOUSE - WATER AND GAS FLOOR PLAN
P1.2 WAREHOUSE - WASTE AND AIR FLOOR PLAN
P1.3 WAREHOUSE - PLUMBING SCHEMATICS
P2.1 OFFICE BLDG - WATER AND GAS PIPING PLAN
P2.2 OFFICE BLDG - WASTE FLOOR PLAN
P2.3 OFFICE BLDG - PLUMBING SCHEMATICS
P3.1 VISITOR BLDG - WATER AND GAS FLOOR PLAN
P3.2 VISITOR BLDG - WASTE FLOOR PLAN
P3.3 VISITOR BLDG - PLUMBING SCHEMATICS
P4.1 PLUMBING DETAILS
P4.2 PLUMBING FIXTURE SCHEDULE AND WATER CALCULATIONS

FP1.1 FIRE PROTECTION FLOOR PLAN - WAREHOUSE
FP2.1 FIRE PROTECTION FLOOR PLAN - OFFICE BLDG
FP3.1 FIRE PROTECTION FLOOR PLAN - VISITOR CONTACT BUILDING

M1.1 MECHANICAL FLOOR PLAN - WAREHOUSE
M1.2 WAREHOUSE BLDG - 1/4" SCALE EQUIP. RM. FLOOR PLANS AND SCHEDULES
M2.1 MECHANICAL FLOOR PLAN - OFFICE
M2.2 OFFICE BLDG - SCHEDULES, DETAILS AND DIAGRAMS
M2.3 OFFICE BLDG - 1/4" SCALE EQUIP. RM. PLANS
M3.1 MECHANICAL FLOOR PLAN - VIS CONTACT BLDG
M3.2 VIS CONTACT BLDG - DETAILS, DIAGRAMS AND SCHEDULES
M3.3 VIS CONTACT BLDG - 1/4" SCALE EQUIPMENT ROOM PLANS
M4.1 PROJECT COMMON DETAILS AND DIAGRAMS

E0.1 GENERAL NOTES, LEGENDS, SHEET INDEX
E0.2 ELECTRICAL SITE PLAN
E1.1 POWER PLAN - WAREHOUSE BUILDING
E1.2 LIGHTING PLAN - WAREHOUSE BUILDING
E1.3 LIGHTNING PROTECTION SYSTEM - WAREHOUSE
E1.4 SPECIAL SYSTEMS PLAN - WAREHOUSE BLDG
E2.1 POWER PLAN - OFFICE BUILDING
E2.2 LIGHTING PLAN - OFFICE BUILDING
E2.3 LIGHTNING PROTECTION SYSTEM - OFFICE BLDG
E2.4 SPECIAL SYSTEMS PLAN - OFFICE BUILDING
E3.1 POWER PLAN - VISITOR CONTACT BUILDING
E3.2 LIGHTING PLAN - VISITOR CONTACT BLDG
E3.3 LIGHTNING PROTECTION SYSTEM - V.C. BLDG
E3.4 SPECIAL SYSTEMS PLAN - VIS CONTACT BLDG
E4.1 SCHEMATIC DIAGRAMS, CALCULATIONS
E4.2 EQUIPMENT SCHEDULES
E4.3 EQUIPMENT SCHEDULES
E5.1 INSTALLATION DETAILS
E5.2 INSTALLATION DETAILS

JUNE 1, 2006

U.S. DEPARTMENT OF AGRICULTURE
FOREST SERVICE
R-3
SOUTHWESTERN REGION

Forest: COCONINO NATIONAL FOREST

PROJECT: RED ROCK RANGER STATION

Sheet Title: INDEX TO DRAWINGS

Scale: NONE

Sheet: T0.2

USFS Seed1 v1.0

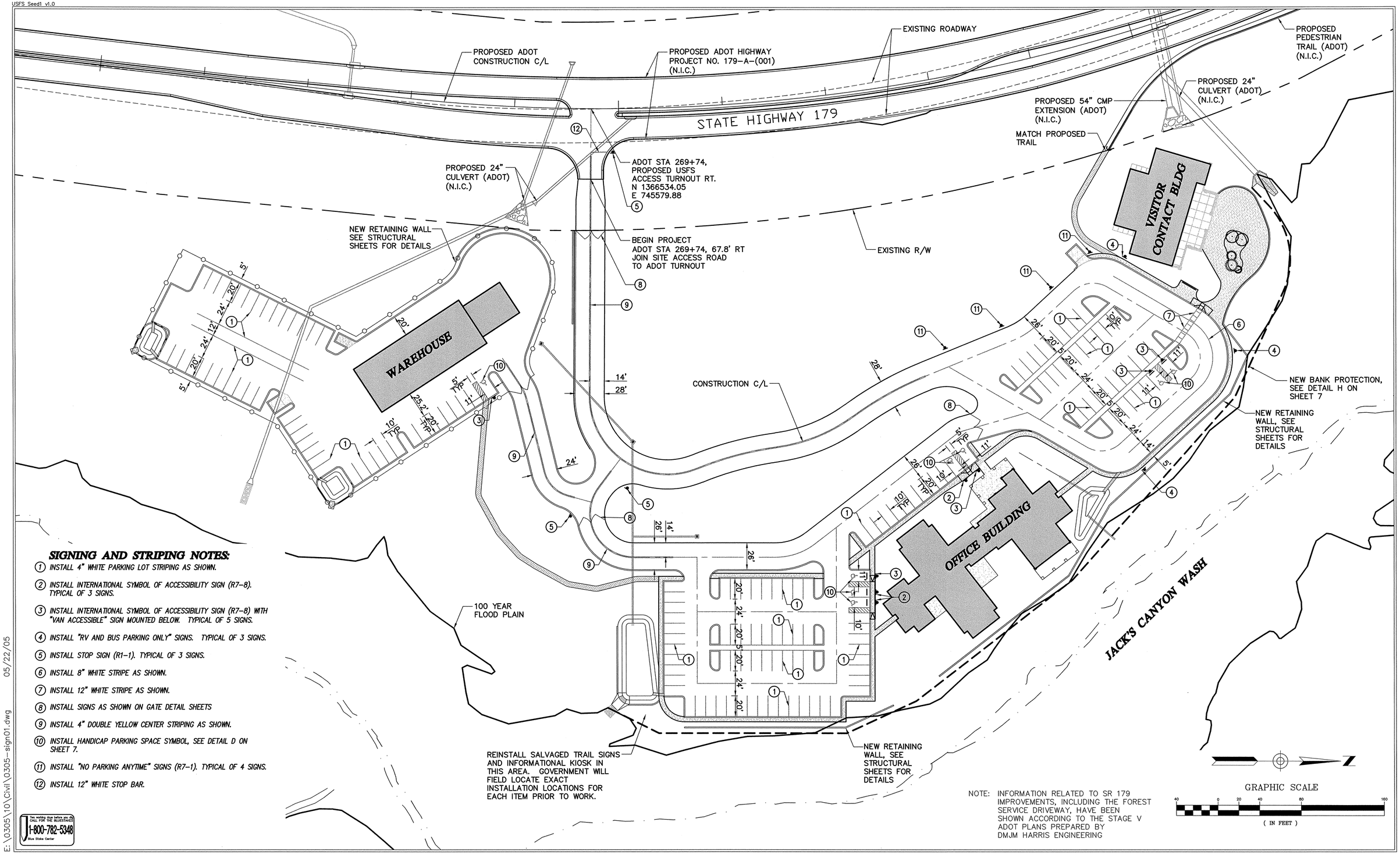

SIGNING AND STRIPING NOTES:

1. INSTALL 4" WHITE PARKING LOT STRIPING AS SHOWN.
2. INSTALL INTERNATIONAL SYMBOL OF ACCESSIBILITY SIGN (R7-8). TYPICAL OF 3 SIGNS.
3. INSTALL INTERNATIONAL SYMBOL OF ACCESSIBILITY SIGN (R7-8) WITH "VAN ACCESSIBLE" SIGN MOUNTED BELOW. TYPICAL OF 5 SIGNS.
4. INSTALL "RV AND BUS PARKING ONLY" SIGNS. TYPICAL OF 3 SIGNS.
5. INSTALL STOP SIGN (R1-1). TYPICAL OF 3 SIGNS.
6. INSTALL 8" WHITE STRIPE AS SHOWN.
7. INSTALL 12" WHITE STRIPE AS SHOWN.
8. INSTALL SIGNS AS SHOWN ON GATE DETAIL SHEETS
9. INSTALL 4" DOUBLE YELLOW CENTER STRIPING AS SHOWN.
10. INSTALL HANDICAP PARKING SPACE SYMBOL, SEE DETAIL D ON SHEET 7.
11. INSTALL "NO PARKING ANYTIME" SIGNS (R7-1). TYPICAL OF 4 SIGNS.
12. INSTALL 12" WHITE STOP BAR.

NOTE: INFORMATION RELATED TO SR 179 IMPROVEMENTS, INCLUDING THE FOREST SERVICE DRIVEWAY, HAVE BEEN SHOWN ACCORDING TO THE STAGE V ADOT PLANS PREPARED BY DMJM HARRIS ENGINEERING

Two working days before you dig CALL FOR THE BLUESTAKES 1-800-782-5348 Blue Stake Center

E:\0305\10\Civil\0305-sign01.dwg 05/22/05

U.S. DEPARTMENT OF AGRICULTURE
FOREST SERVICE
R-3
SOUTHWESTERN REGION

Use or alteration of the information in this instrument for other than the specific purpose for which it was intended and for other than the client for whom it was prepared is forbidden unless expressly permitted in writing in advance by R.S. ENGINEERING INCORPORATED, and R.S. ENGINEERING INCORPORATED shall have no liability to any use of this information without their written consent. © RS ENGINEERING

RS ENGINEERING
140 North Tucson Boulevard, Tucson, Arizona 85716
(520) 791-2923 • Fax: (520) 791-9405
www.rsengineering.com

Registered Professional Engineer (Civil) CERTIFICATE NO. 12749 ROBERT M. SUAREZ Date Signed 5-24-05 ARIZONA, U.S.A.

Drawn	GV/HK
Design	JP/GV
Checked	RMS
Reviewed	JP

Forest: COCONINO NATIONAL FOREST

Project Name: New Visitor Contact Bldg., Office Building & Warehouse for the Red Rock Ranger Station

Sheet Title: SIGNING/STRIPING

Scale: 1"=40'

Sheet 14 of 20

USFS Seed1 v1.0

WATER NOTES:

1. ALL WATER PIPES TO BE CLASS 350 DIP.
2. WATER SERVICE CONNECTIONS TO BUILDING TO BE SUPPLIED WITH PRESSURE REDUCERS–COORDINATE WITH PLUMBING PLANS.
3. FIRE SPRINKLER DESIGNS TO CONSIDER APPROXIMATE STATIC PRESSURE OF 150 PSI–COORDINATE WITH PLUMBING PLANS.
4. SEE PLUMBING PLANS FOR INDIVIDUAL BUILDING BACKFLOW DEVICES.

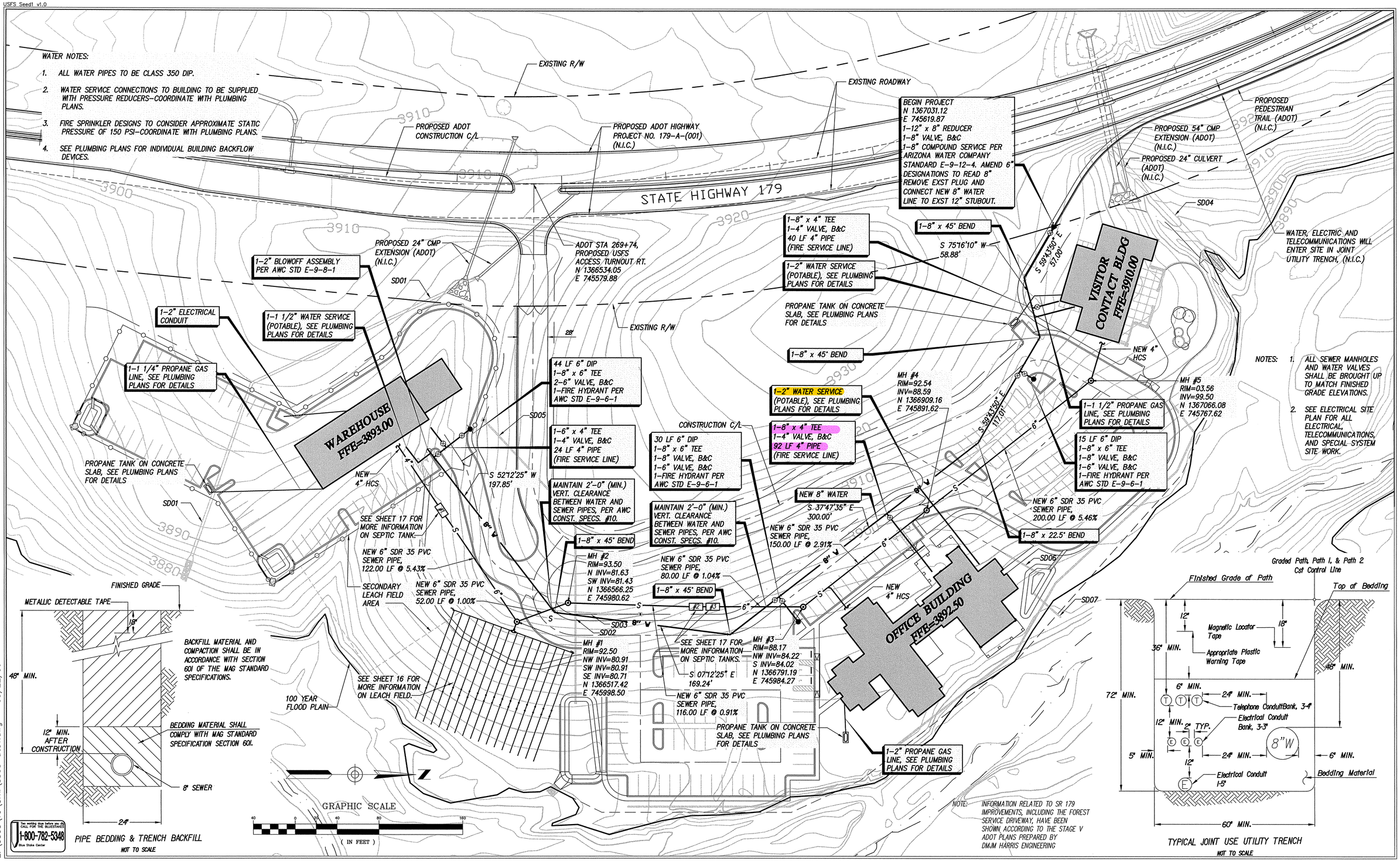

E:\0305\10\Civil\0305-ut01.dwg 05/22/06

Call two working days before you dig. CALL FOR THE BLUESTAKES 1-800-782-5348 Blue Stake Center

U.S. DEPARTMENT OF AGRICULTURE
FOREST SERVICE
R-3
SOUTHWESTERN REGION

Use or alteration of the information in this instrument for other than the specific purpose for which it was intended and for other than the client for whom it was prepared is forbidden unless expressly permitted in writing in advance by R.S. ENGINEERING INCORPORATED, and R.S. ENGINEERING INCORPORATED shall have no liability to any use of this information without their written consent. © RS ENGINEERING

RS ENGINEERING
140 NORTH TUCSON BOULEVARD, TUCSON, ARIZONA 85716
(520) 791-3933 • FAX: (520) 791-9405
WWW.RSENGINEERING.COM

REGISTERED PROFESSIONAL ENGINEER (CIVIL) CERTIFICATE NO. 12749 ROBERT M. SUAREZ Date Signed 5-22-06 ARIZONA, U.S.A.

Drawn	GV/HK
Design	JP/GV
Checked	RMS
Reviewed	JP

Forest: COCONINO NATIONAL FOREST

Project Name: New Visitor Contact Bldg., Office Building & Warehouse for the Red Rock Ranger Station

Sheet Title: UTILITY PLAN

Scale: 1" = 40'

Sheet 15 of 20

GENERAL STRUCTURAL NOTES:

1) DESIGN LOADS

- ROOF LIVE LOAD = 20 PSF (SNOW)
- ROOF DL = 2.0 PSF (METAL ROOF PANEL)
  = 2.5 PSF (3/4" PLYWD DECKING)
  = 4.0 PSF (TRUSSES @ 2' O/C)
  = 2.5 PSF (12" BATT INSUL.)
  = 4.0 PSF (ACOUST. CLG. OR 2" T & G)
  = 5.0 PSF (WET PIPE SPRINKLER)
  = 5.0 PSF (MISC. MECH. & ELEC.)
  = 25.0 PSF
- WIND LOADING: (ICBO 2003 EDITION)
  BASIC WIND SPEED – 90 MPH
  EXPOSURE = C
  BUILDING CATEGORY: II – Iw = 1.00
  EXPOSURE CLASSIFICATION: ENCLOSED
  DESIGN PROCEDURE: SIMPLIFIED LOW RISE METHOD
  GOVERNING WIND PRESSURES:
  WINDWARD WALL = 13.1 PSF
  WINDWARD PARAPET = 23.5 PSF
  LEEWARD WALL = 9.4 PSF
  LEEWARD PARAPET = 14.4 PSF
  ROOF = 15.8 PSF (UPWARD)
  NET WIND UPLIFT ROOF TRUSS = 20 PSF
- SEISMIC LOADING: (ICBO 2003 EDITION)
  OCCUPANCY CATEGORY: II SEISMIC GROUP I
  SITE CLASSIFICATION: C Fa=1.20, Fv=1.69
  MAX. CONSIDERED EQ ACCEL.: Sms=.454, Sm1=.180
  DESIGN SPECTRA ACCEL.: Sds=.303, Sd1=.120
  SEISMIC DESIGN CATEGORY: B
  SEISMIC FORCE RESISTING SYSTEMS:
  OFFICE & VISITOR: LIGHT–FRAMED WALLS W/ PLYWD PANELS
  WAREHOUSE: ORDINARY REINF. CMU SHEAR WALLS
  RESPONSE COEFFICIENT(Cs) & BASE SHEAR:
  OFFICE BLDG.: Cs=.05, APPROX. W = 600 K, BASE SHEAR = 30 K
  VISITOR CONTACT.: Cs=.05, APPROX. W = 400 K, BASE SHEAR = 20 K
  WAREHOUSE: Cs=.12, APPROX. W = 400 K, BASE SHEAR = 48 K

2) MATERIALS

- CONCRETE:
  a. FOOTINGS & STEM WALLS – F'c = 3000 psi
  b. SLABS ON GRADE – F'c = 3000 psi
  c. RETAINING WALLS – F'c = 4000 psi
- REINFORCING:
  a. ALL PRINCIPAL LONGITUDINAL – ASTM A615–GR. 60
  b. TIES: ASTM A615 – GR. 40
  c. WELDED WIRE FABRIC: ASTM A185 – GR. 60
- MASONRY:
  a. WALL UNITS – ASTM C90, GR. N–1, F'm = 1500 PSI
  b. MORTAR – ASTM C270, TYPE S
  c. GROUT – ASTM C476
- STRUCTURAL STEEL:
  a. SHAPES, ANGLES, CHANNELS, PLATES – ASTM A36
  b. STEEL TUBING – ASTM A500, GR.B
  c. STEEL PIPE – ASTM A53, GR.B
- WOOD:
  a. LUMBER BEAMS & LEDGERS – S–P–F, NO.2 OR BETTER
  b. STUDS – S–P–F, STUD GRADE OR BETTER
  c. PLYWOOD – APA RATED SHEATHING, EXTERIOR
  d. WOOD TRUSSES – PREFABRICATED BY ALPINE OR EQUAL
  e. MANUFACTURED BEAMS – 2.0E PARALLAM PSL
  f. EXPOSED TIMBERS & TIMBER TRUSS – DFir–L, No. 1 OR BTR.
- ANCHOR BOLTS AND EMBEDDED BOLTS, ASTM A307
- CONNECTION BOLTS: ASTM A325–N
- SOIL BEARING PRESSURE: 3000 PSF (REPORT)
- FILL MATERIAL: COMPACTED, NON–EXPANSIVE FILL (SEE SPEC. SECTION 02200 AND SOILS REPORT BY NINYO & MOORE. DATED JULY 15, 2003)
- BASE COURSE BELOW SLAB: ADOT, CLASS 2, SEE RPT.

3.) GENERAL CONSTRUCTION NOTES

A. FOUNDATION NOTES:

1. SITE PREPARATION (HIGHLIGHTED HEREIN, SEE SOILS RPT FOR MORE DETAIL).
   a. REMOVE ALL EXISTING SITE SOILS BELOW BUILDING STRUCTURES TO ALLOW PLACEMENT OF THE FOLLOWING MINIMUM ENGINEERED FILL:
      – BELOW FOOTINGS: 3' & EXTEND LATERALLY BEYOND EDGES 3'.
      – BELOW SLABS ON GRADE: 12" BELOW BASE COURSE LAYER.
   b. THE EXPOSED OVEREXCAVATED SURFACE SHALL BE SCARIFIED TO A DEPTH OF 8" AND RECOMPACTED TO 95% OF MAXIMUM DENSITY AS ESTABLISHED BY ASTM D–698.
   c. THE FOOTING BASE SHALL BE BROUGHT TO DESIGN ELEVATION UTILIZING ENGINEERED STRUCTURAL FILL PLACED AS NOTED BELOW.
   d. NO FOOTING SHALL BEAR DIRECTLY ON BEDROCK, CUT BEDROCK TO ALLOW A MIN. 3' OF STRUCTURAL FILL BE PLACED BELOW BOTT. OF FTG.
2. IMPORTED & ON SITE SOILS ARE ACCEPTABLE AS STRUCTURAL FILL PROVIDED THEY MEET THE FOLLOWING REQUIRMENTS FOR A STRUCTURAL FILL. ALL FILL MATERIAL SHALL BE FREE OF VEGETATION AND DEBRIS AND CONTAIN NO ROCKS OR NON–SOIL MTL. LARGER THAN 6 INCHES. FILL MATERIAL SHALL EXHIBIT VERY LOW TO LOW EXPANSIVE POTENTIAL WITH AN EXPANSION INDEX OF 50 OR LESS AS DENFINED BY ASTM D–4829.

   THE PLASTICITY INDEX SHOULD BE NO GREATER THAN 20 WHEN TESTED IN ACCORDANCE WITH ASTM D–4318. IMPORTED MATERIAL IN CONTACT WITH FERROUS METALS OR CONCRETE SHOULD HAVE LOW CORROSION POTENTIAL (MINIMUM RESISTIVITY GREATER THAN 2,000 OHM–CM, CHLORIDE CONTENT LESS THAN 25 PPM AND LESS THAN 0.10% SOLUBE SULFATE CONTENT).
3. STRUCTURAL FILL AND BACKFILL SHALL BE PLACED IN LAYERS NOT TO EXCEED 9" LOOSE, WITH EA. LAYER BEING COMPACTED TO A MINIMUM DENSITY OF 95% OF LABORATORY DENSITY AS DETERMINED BY ASTM D–698.
4. THE METHOD AND STABILITY OF THE FOUNDATION EXCAVATION IS THE RESPONSIBILITY OF THE CONTRACTOR, SEE SPECS. AND NOTES HEREIN FOR ADDITIONAL INFORMATION.
5. CORNERS AND INTERSECTIONS OF FOOTINGS SHALL BE REINFORCED WITH CORNER BARS OF EQUAL NUMBER AND SIZE AS LONGIT. REINF. WITH 24" LEGS.
6. A GEOTECHNICAL ENGINEER SHALL BE RETAINED TO OBSERVE PROPER PLACEMENT AND COMPACTION OF STRUCTURAL FILL.

B. CAST–IN–PLACE CONCRETE NOTES:

1. UNLESS OTHERWISE NOTED, CONCRETE COVERAGE OVER REINFORCEMENT SHALL CONFORM TO SECTION 7.7.1 OF THE ACI STANDARD 318–05.
2. UNLESS OTHERWISE SHOWN, MIN. SPLICE LAP ON ALL REINF. BARS SHALL BE 30 BAR DIAMETERS.
3. CONTRACTOR SHALL PLAN ALL SLAB POURS TO HAVE CONSTRUCTION JOINTS COINCIDE WITH CONTROL JOINTS.
4. CONTRACTOR SHALL COORDINATE THE WORK OF ALL TRADES TO INSURE THAT ALL ANCHORS, EMBEDDED ITEMS, RECESSED AREAS & PENETRATIONS COMPLY WITH DETAILS AS SHOWN ON DRAWINGS OR OTHERWISE SPECIFIED.

C. WOOD NOTES:

1. CONTRACTOR SHALL COORDINATE THE WORK OF ALL TRADES TO INSURE THAT ALL PENETRATIONS THROUGH ROOF COMPLY WITH DETAILS AS SHOWN ON DRAWINGS OR OTHERWISE SPECIFIED.
2. CONTRACTOR SHALL BE RESPONSIBLE FOR THE TEMPORARY SUPPORT OF ROOF FRAMING OR ANY PARTLY ASSEMBLED ROOF FRAMING DURING CONSTRUCTION.
3. DURING CONSTRUCTION, THE CONTRACTOR SHALL PROVIDE ADEQUATE DISTRIBUTION OF CONCENTRATED LOADS SO THAT THE LOAD CARRYING CAPACITY OF ANY MEMBER IS NOT EXCEEDED.
4. ROOF DECK FASTENING (ALL NAILS TO BE COMMON WIRE NAILS UNLESS NOTED OTHERWISE)
   a) 3/4" PLYWOOD OVER PREFABRICATED WOOD TRUSSES: USE 8d @ 6" O/C @ ALL SUPPORTED EDGES AND 8d @ 12" O/C @ INTERMEDIATE FRAMING MEMBERS.
5. 1/2" PLYWOOD (APA–RATED SHEATHING) FOR SHEAR WALLS TO BE ATTACHED W/ #10 TEK SCREWS ALONG EDGES @ 3" O/C & IN FIELD @ 12" O/C, (ALL EXTERIOR WALLS TO HAVE 1/2" APA–RATED SHEATHING.)
6. DOUBLE 2X6 TOP PLATE TO HAVE STAGGERED SPLICE, CONNECTED ACCORDING TO UBC REQUIREMENTS.
7. CONNECT ROOF TRUSS TO DOUBLE 2X6 TOP PLATE AS PER MANUF. RECOMMENDED STANDARD & UBC MIN. REQUIREMENTS FOR WOOD FRMG.
8. PROVIDE STRUT LINE BRACING DURING TRUSS ERECTION AS PER MANUFACTURERS' RECOMMENDATIONS.

D. STRUCTURAL STEEL NOTES:

1. ALL WELDING SHALL BE DONE IN ACCORDANCE WITH AWS CODE. ALL WELDING TO BE DONE BY CERTIFIED WELDERS. CERTIFICATIONS SUBMITTED AS PER SPECIFICATION SECTION 05120 – 1.05.D.
2. ALL H.S. A325 BOLT CONNECTIONS SHALL BE BEARING TYPE MATERIALS, AND INSTALLATION SHALL BE IN ACCORDANCE WITH THE AISC "SPECIFICATIONS FOR STRUCTURAL JOINTS USING ASTM A325 & A490 BOLTS", 1989 ED.
3. CONTRACTOR SHALL BE RESPONSIBLE FOR THE TEMPORARY SUPPORT OF STEEL FRAMING OR ANY PARTLY ASSEMBLED STEEL FRAMING DURING CONSTRUCTION.
4. DURING CONSTRUCTION, THE CONTRACTOR SHALL PROVIDE ADEQUATE DISTRIBUTION OF CONCENTRATED LOADS SO THAT THE LOAD CARRYING CAPACITY OF ANY MEMBER IS NOT EXCEEDED.
5. ALL EXPOSED WELDED JOINTS SHALL BE GROUND SMOOTH.
6. ALL EXPOSED STEEL PLATE WOOD TRUSS CONNECTIONS SHALL BE PAINTED BLACK AS PER CONTRACTING OFFICER DIRECTIONS.

E. MASONRY NOTES:

1. ALL VERTICAL CELLS BELOW GRADE AND WITH REINF. TO BE GROUTED SOLID.
2. VERTICAL REINF. SHALL BE CONTINUOUS (UNLESS OTHERWISE SHOWN) FROM TOP OF FTG. TO TOP OF MASONRY WALL WITH SPLICE LENGTHS NOT LESS THAN 24". VERTICAL REINF. SHALL BE AS FOLLOWS UNLESS OTHERWISE SHOWN OR NOTED:
   a) TYPICAL 12" CMU WALL 2–#5 @ 32" o/c. (1 EA. FACE)
   b) TYPICAL 8" CMU WALL #5 @ 24" o/c.
   c) 3 – #5 VERT. AT CORNERS & INTERSECTIONS.
   d) 1 – #5 VERT. ADJ. TO OPENINGS, ADJ. TO CONTROL JTS. & AT ENDS OF WALL.
   e) SPECIAL PILASTER REINF. AS NOTED ON FND. PLAN S1.3
3. HORIZ. REINF. IN BOND BEAMS SHALL BE 2 – #5 BARS CONT. WITH A SPLICE LENGTH NOT LESS THAN 24". LOCATE BOND BEAMS UNLESS SHOWN OR NOTED OTHERWISE AT: a) FIN. FLOOR LEVEL, b) TOP OF WALL, c) TOP OF OPENINGS.

   NO. 9 TRUSS TYPE HORIZ. JOINT REINF. SHALL BE PLACED IN ALTERNATE COURSES BETWEEN BOND BEAMS WITH A LAP LENGTH OF 12".
4. CORNERS & INTERSECTIONS OF BOND BEAMS SHALL BE REINF. WITH BARS OF SAME SIZE & NUMBER AS B.B. W/ 24" LEG.
5. HORIZ. REINF. IN BOND BEAMS AT TOP OF WALL SHALL BE CONTINUOUS THROUGH VERTICAL CONTROL JOINT.
6. AT ALL MECHANICAL DUCT PENETRATIONS PROVIDE 1 – #5 IN ADJ. CELL EXTENDING 24" ABOVE & BELOW OPENING. IN ADDITION, RUN HORIZ. LINTEL BEAM W/2 – #4's ACROSS TOP, EXTENDING 24" BEYOND FACE OF OPENING ON EA. SIDE (COORDINATE W/ MECH. & ELEC. FOR LOCATION AND SIZE.)
7. MAXIMUM SPACING VERTICAL CONTROL JOINTS 40'.

U.S. DEPARTMENT OF AGRICULTURE
FOREST SERVICE
R–3
SOUTHWESTERN REGION

STRUCTURAL DESIGN ASSOC.
540 CHAMA, NE SUITE 8
ALBUQUERQUE, NM 87108
505-255-9499 505-255-9599 FAX

Drawn	A. LEONARD
Design	A. LEONARD
Checked	A. LEONARD
Date	06/01/2006

Forest: COCONINO NATIONAL FOREST

Project Name: A NEW OFFICE, VISITOR CONTACT & WAREHOUSE BUILDING @ RED ROCK R.D.

Sheet Title: GENERAL STRUCTURAL NOTES ALL BUILDINGS

Scale: NOT APPL.

Sheet: S0.1

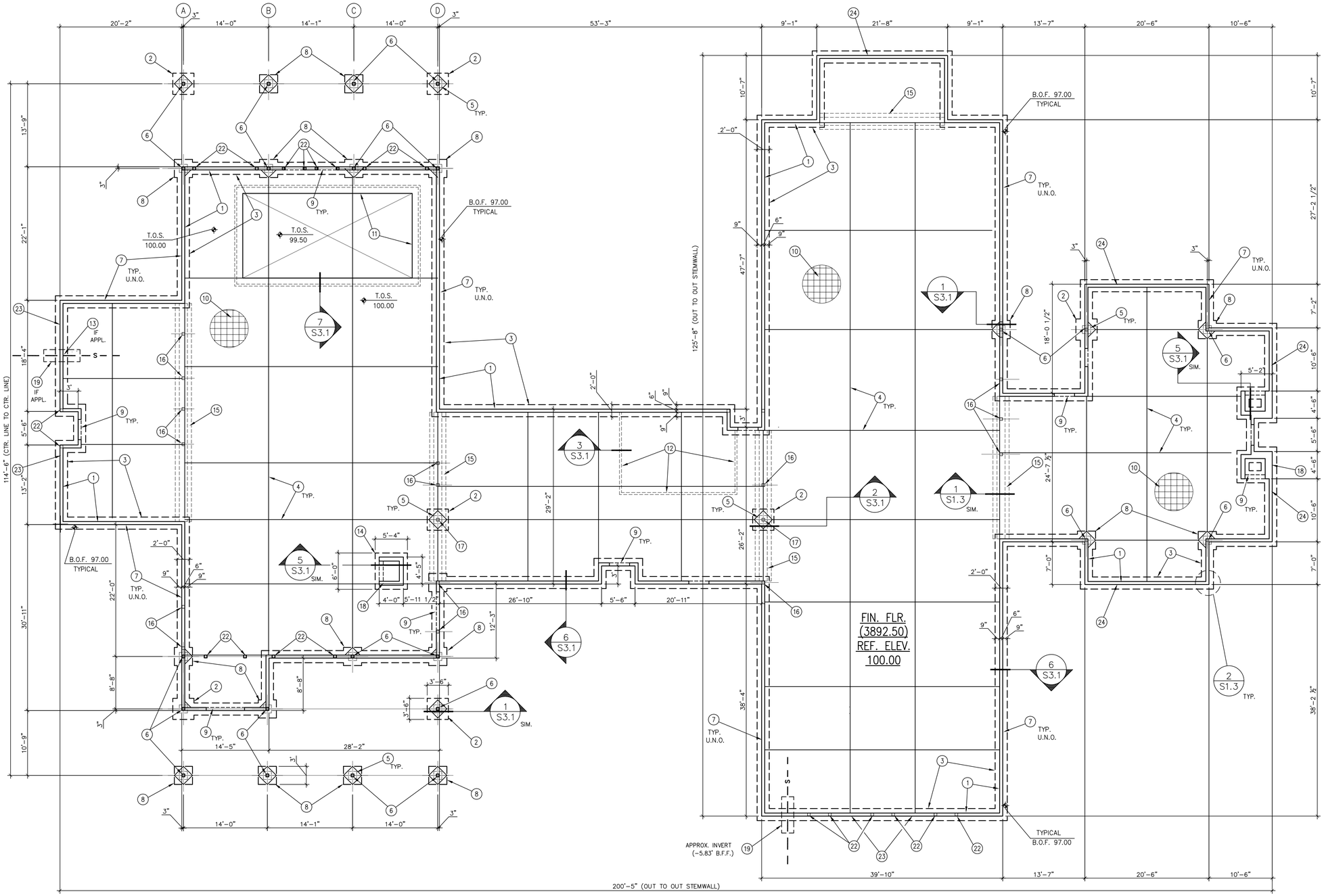

A FOUNDATION PLAN - OFFICE BUILDING

1/8" = 1'-0"

KEYED NOTES:

1. 6" CONC. STEM WALL FLUSH WITH OUTSIDE FACE OF PLYWOOD SHEATHING, PROVIDE ISOLATION FROM CONC. SLAB.
2. 3'-6" x 3'-6" x 12" (THK.) CONC. FTG., W/ 4 – #5 EA. DIR.
3. 2'-0" x 12" (THK.) CONT. CONC. FTG. W/ 3-#5 CONT.
4. TYPICAL CONTROL JOINT, SEE DTL. 8, SHT. S3.1.
5. 16" x 16" CONC. PEDESTAL, DROP TOP OF PEDESTAL 12" BELOW FIN. FLR. LEVEL AT COLUMNS IN EXTERIOR WALLS.
6. HSS 5 X 5 X 3/8 STL. TUBING COL., SEE RF. FRAMING FOR TOP CONN. & 11 X 11 X 3/4 BOTTOM PLATE W/ 4 – 3/4 " ø X 16" A. BOLTS.
7. 2 X 6 WOOD STUDS @ 16" O.C. (S-P-F, No. 2 OR BETTER), PROVIDE STUD DIRECTLY BELOW EACH ROOF TRUSS BEARING.
8. 3' X 3' X 12" (THK.) CONC. FTG. OR FTG. ENLARGEMENT, W/ 3 – #5 EA. DIR.
9. DROP TOP OF CONC. STEM WALL 8" AT DOORWAYS, TYP.
10. 4" CONCRETE SLAB W/ WWF 6 X 6 – W2.9 X W2.9 REINF. TO BE PLACED AT SLAB MID HT W/ CHAIRS.
11. 6" SLAB RECESS, SEE DTL. 7, SHT. S3.1.
12. 8" (D) THICKENED CONCRETE SLAB W/ #5 @ 12" O/C EACH DIR, SEE DTL. 3/S3.1.
13. 2" COMPRESSION MATERIAL AROUND SEWER LINE PIPE PENETRATION OF FOUNDATION WALL, INVERT SEE PLUMB.
14. 5' – 4" X 6' – 0" X 12" (THK.) CONC. RAFT FOOTING W/ #5 @ 12" O/C EA. WAY.
15. 16" X 12" (THK.) THICKENED SLAB W/ (2) – #5 CONT.
16. 6 X 6 WOOD POST, (S-P-F, NO.2 OR BETTER).
17. HSS 4 X 4 X 3/8 STL. TUBING COL., SEE DTL. 5/ S4.4 FOR TOP CONN. & 11 X 11 X 1/2 BOTTOM PLATE W/ 4–3/4"ø X 16" A.BOLTS.
18. 8" CMU WALL W/ #5 @ 24" O/C, VERT.
19. 4"ø SEWER LINE, SEE PLUMBING FOR DEPTH PROVIDE 24"ø X 6' LONG CONC. ENCASEMENT IF LESS THAN 3' BELOW BOTT. OF FOOTING.
20. NOT USED.
21. NOT USED.
22. 5 1/4" X 5 1/2" PARALLAM WINDOW OR DOOR JAMB COL. THIS LOC.
23. (2) – 2 X 6 STUDS @ 16" O.C., WHERE HT. GREATER THAN 12'-4", THEN 2 X 6 STUDS @ 16" O/C WHERE HT. LESS THAN 12'-4", SPECIAL CONDITION THIS GABLE WALL.
24. 2 X 6 STUDS @ 12" O.C., SPECIAL CONDITION THIS GABLE WALL.

LEGEND

B.O.F.	BOTTOM OF FOOTING ELEVATION
F.F.E.	FINISH FLOOR ELEVATION
B.F.F.	ELEV. BELOW FINISH FLOOR
U.N.O.	UNLESS NOTED OTHERWISE.

GENERAL NOTES:

1. ALL EXTERIOR WALLS TO HAVE 1/2" APA-RATED SHEATHING, EXTERIOR GRADE, EXTERIOR SIDE OF STUDS. SEE DTL. 2/S1.3 FOR SHEAR WALL END CONNECTION TO STEM WALL.

0 8' 16' 32'

SCALE: 1/8" = 1'-0"

U.S. DEPARTMENT OF AGRICULTURE
FOREST SERVICE
R-3
SOUTHWESTERN REGION

STRUCTURAL DESIGN ASSOC.
540 CHAMA, NE SUITE 8
ALBUQUERQUE, NM 87108
505-255-9499 505-255-9599 FAX

Drawn	A. LEONARD
Design	A. LEONARD
Checked	A. LEONARD
Date	06/01/2006

Forest: COCONINO NATIONAL FOREST

Project Name: A NEW OFFICE, VISITOR CONTACT & WAREHOUSE BUILDING @ RED ROCK R.D.

Sheet Title: FOUNDATION PLAN - OFFICE BUILDING

Scale: AS SHOWN

Sheet: S1.1

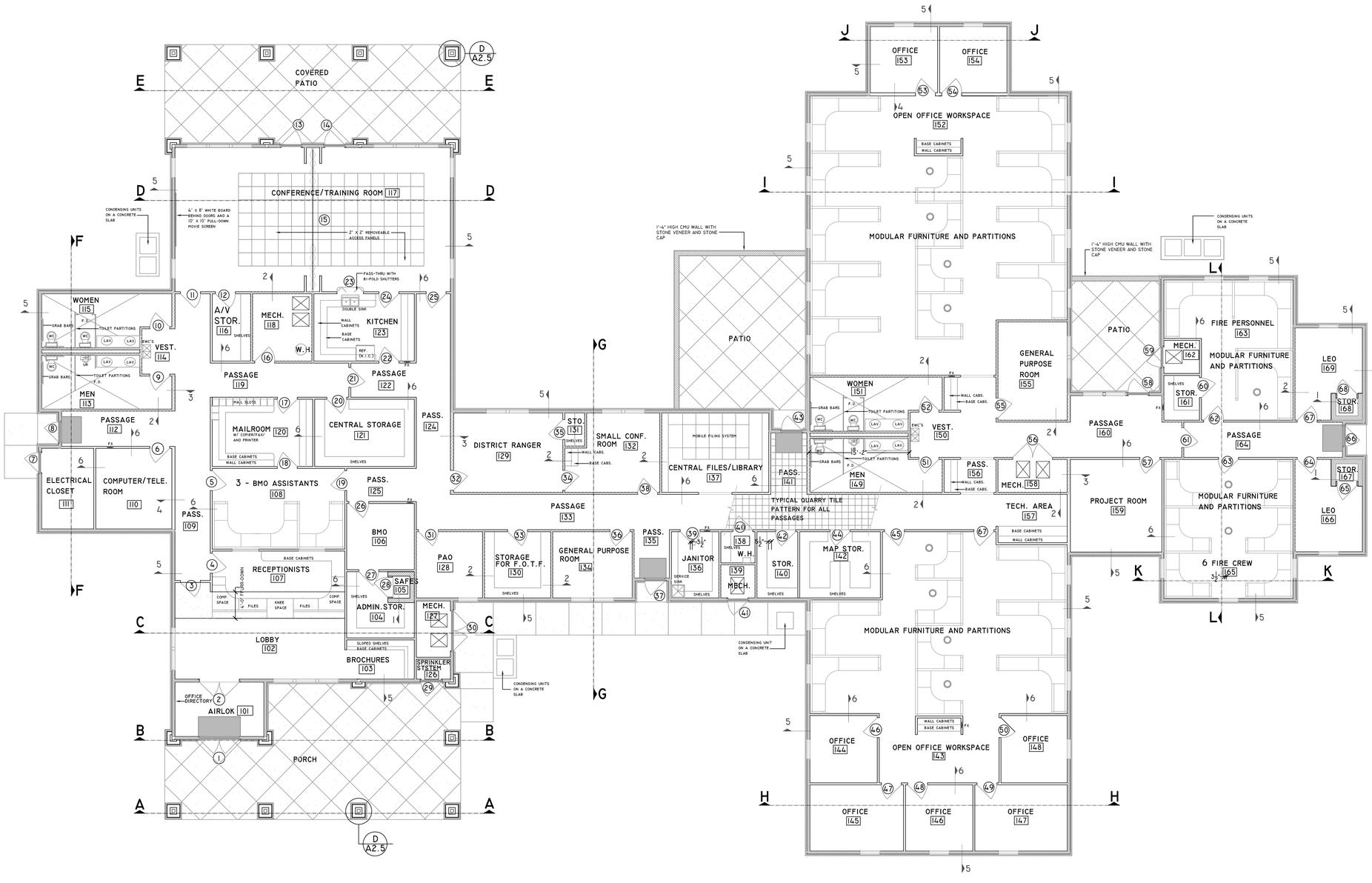

A ARCHITECTURAL FLOOR PLAN

1/8" = 1'-0"

LEGEND TO FLOOR PLAN

- 2 X 4 WOOD STUD PARTITION W/ SOUND BATT INSULATION
- 2 X 6 WOOD STUD PARTITION W/ SOUND BATT INSULATION
- TYPICAL EXTERIOR WALL - 2 X 6 WOOD STUDS W/ BATT INSULATION, SPLIT-FACE BLOCK WAINSCOT AND ELASTOMERIC STUCCO SYSTEM
- 2 STAFF 145 — ROOM NAME AND NUMBER
- 41 — DOOR SYMBOL AND NUMBER
- A — WINDOW SYMBOL AND LETTER
- DOUBLE SINK — PLUMBING FIXTURE AND NAME
- 41 — DOOR SYMBOL
- A — WINDOW SYMBOL
- BASE & WALL CABS. — MILLWORK DESIGNATION
- W.H. — WATER HEATER SYMBOL
- 8" CONCRETE BLOCK WALL
- CONDENSING UNITS ON CONCRETE SLAB
- BEAM AND COLUMN LINE
- SOLATUBES
- BATT INSULATION
- SOUND BATT INSULATION
- A / A6.4 — DETAIL REFERENCE
- RECESSED FIRE EXTINGUISHER AND CABINET
- RUBBER MATS

GENERAL NOTES:

1. REFER TO SHEET NO. A2.4 FOR WALL TYPES.

JUNE 1, 2006

U.S. DEPARTMENT OF AGRICULTURE
FOREST SERVICE
R-3
SOUTHWESTERN REGION

DESIGN/DRAWN:	BILL CARLSON
CHECKED:	DOUG DENK
FACILITY REVIEW:	
UNION REVIEW:	
ACCESSIBILITY REVIEW:	

Forest: COCONINO NATIONAL FOREST

Project Name: NEW OFFICE, VISITOR CONTACT AND WAREHOUSE BUILDINGS FOR THE RED ROCK R.D.

Sheet Title: ARCHITECTURAL FLOOR PLAN - OFFICE BUILDING

Scale: AS SHOWN

Sheet: A2.2

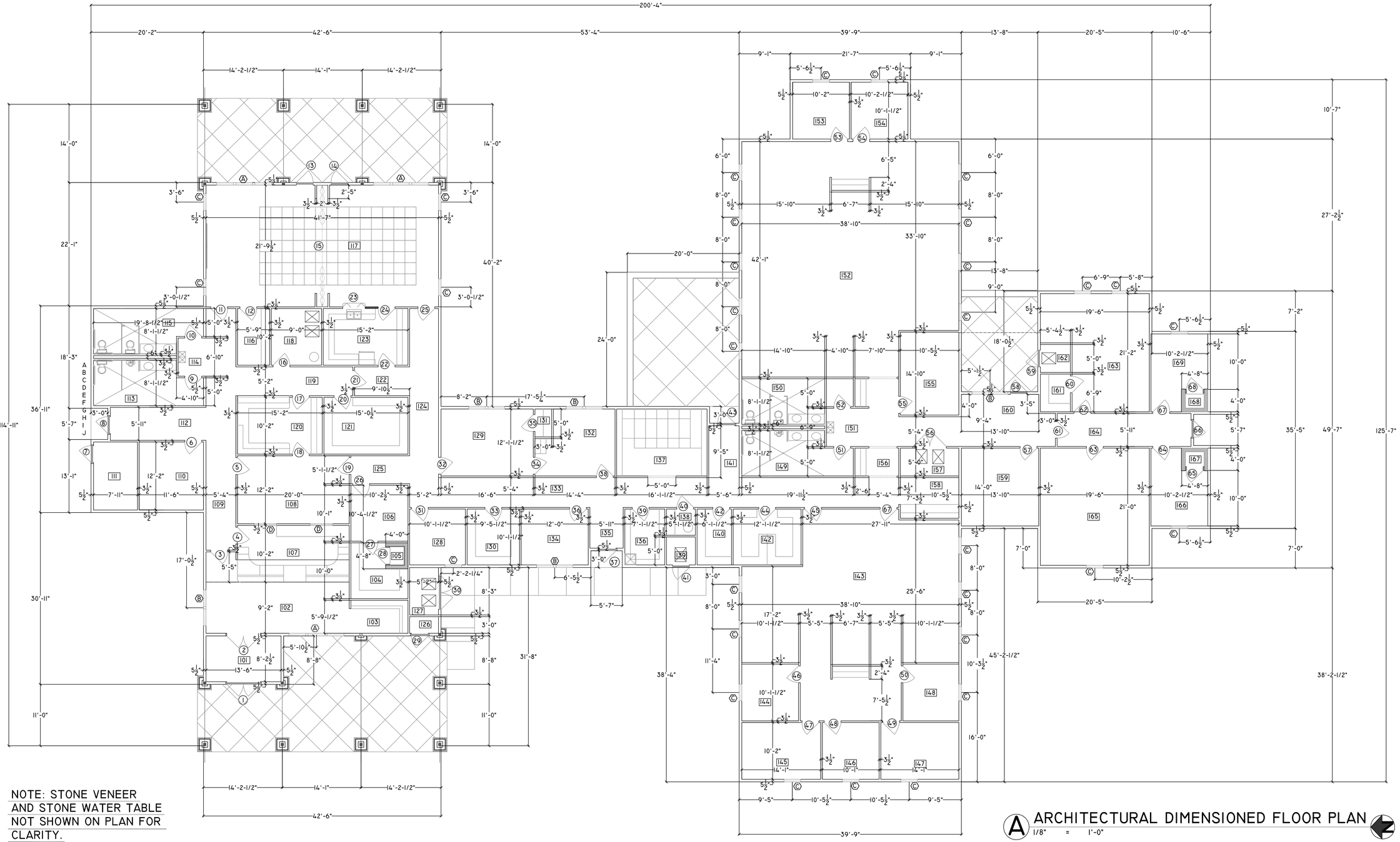

NOTE: STONE VENEER AND STONE WATER TABLE NOT SHOWN ON PLAN FOR CLARITY.

A ARCHITECTURAL DIMENSIONED FLOOR PLAN
1/8" = 1'-0"

JUNE 1, 2006

U.S. DEPARTMENT OF AGRICULTURE
FOREST SERVICE
R-3
SOUTHWESTERN REGION

DESIGN/DRAWN:	BILL CARLSON
CHECKED:	DOUG DENK
FACILITY REVIEW:	
UNION REVIEW:	
ACCESSIBILITY REVIEW:	

Forest: COCONINO NATIONAL FOREST

Project Name: NEW OFFICE, VISITOR CONTACT AND WAREHOUSE BUILDINGS FOR THE RED ROCK R.D.

Sheet Title: ARCHITECTURAL DIMENSIONED FLOOR PLAN - OFFICE BUILDING

Scale: AS SHOWN

Sheet: A2.3

A REFLECTED CEILING PLAN - OFFICE BUILDING

1/8" = 1'-0"

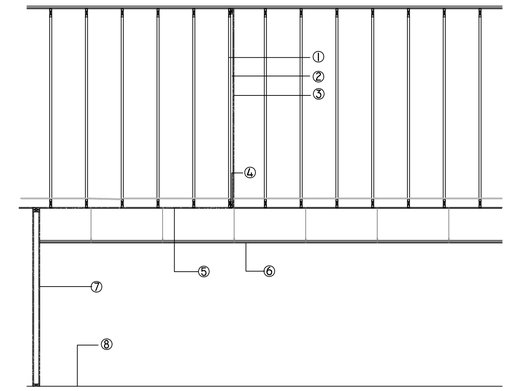

B BUILDING SECTION - DRAFT STOP

1/4" = 1'-0"

NOTE: THIS SECTION APPLIES TO ALL DRAFT STOPS - SEALED GYPSUM BOARD AREA TO EXTEND VERTICALLY ALONG FACE OF TRUSS AS SHOWN AND HORIZONTALLY ON THE BOTTOM CHORD OF THE TRUSSES FOR THE ENTIRE BUILDING.

KEYED NOTES:

1. TRUSS
2. FRAMING PROVIDED AS NEEDED (SHOWN AS 2 X 4 STUD LAID FLAT AGAINST TRUSS).
3. 5/8" TYPE "X" GYPSUM BOARD. (ALL PENETRATIONS SEALED).
4. CONTINUOUS 2 X 4 ALONG BOTTOM CHORD.
5. 5/8" TYPE "X" GYPSUM BOARD APPLIED TO THE BOTTOM CHORD OF THE TRUSSES FOR THE ENTIRE BUILDING..
6. INTERIOR CEILING.
7. INTERIOR PARTITION. (POSITION VARIES).
8. INTERIOR FINISH FLOOR.
9. LOCATION OF DRAFT STOP.

GENERAL NOTES:

1. SEE ELECTRICAL DRAWINGS AND SPECIFICATIONS FOR FIXTURE INFORMATION.

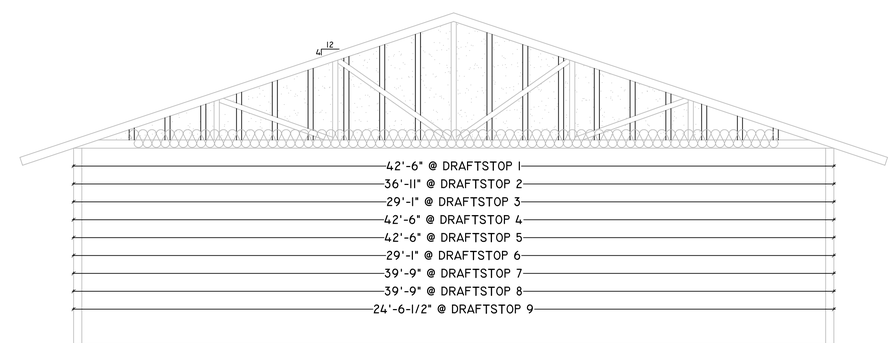

C TYPICAL BUILDING SECTION - DRAFTSTOPS

1/4" = 1'-0"

NOTE: MAJORITY OF BUILDING INTERIOR NOT SHOWN FOR CLARITY. SEE SECTIONS (SHEETS XXXX AND XXXX). SEE SECTION E - THIS SHEET FOR DRAFTSTOP TIE-IN TO PARTITIONS BELOW CEILING.

LEGEND TO REFLECTED CLG. PLAN

- TONGUE AND GROOVE CEILING
- PAINTED GYPSUM BOARD - INTERIOR
- 2 X 4 ACOUSTICAL TILE
- 2 x 2 ACOUSTICAL TILE
- DRAFT STOP LOCATION
- LIGHT FIXTURES AS SCHEDULED
- 1 HOUR RATED FLUE SHAFT
- SOLATUBE LOCATION
- ATTIC ACCESS PANELS

JUNE 1, 2006

U.S. DEPARTMENT OF AGRICULTURE
FOREST SERVICE
R-3
SOUTHWESTERN REGION

DESIGN/DRAWN:	BILL CARLSON
CHECKED:	DOUG DENK
FACILITY REVIEW:	
UNION REVIEW:	
ACCESSIBILITY REVIEW:	

Forest: COCONINO NATIONAL FOREST

Project Name: NEW OFFICE, VISITOR CONTACT AND WAREHOUSE BUILDINGS FOR THE RED ROCK R.D.

Sheet Title: REFLECTED CEILING PLAN - OFFICE BUILDING

Scale: AS SHOWN

Sheet: A2.7

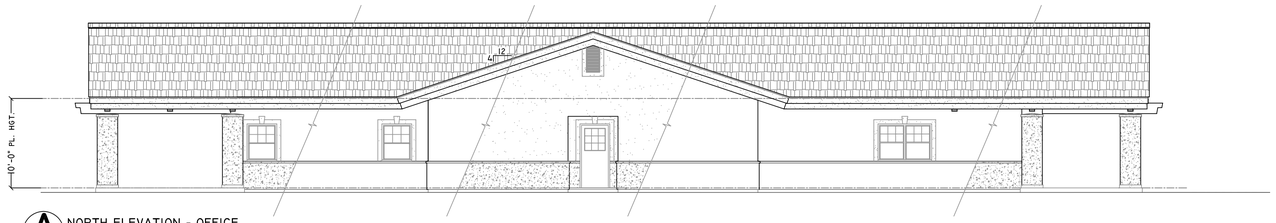

A NORTH ELEVATION - OFFICE
1/8" = 1'-0"

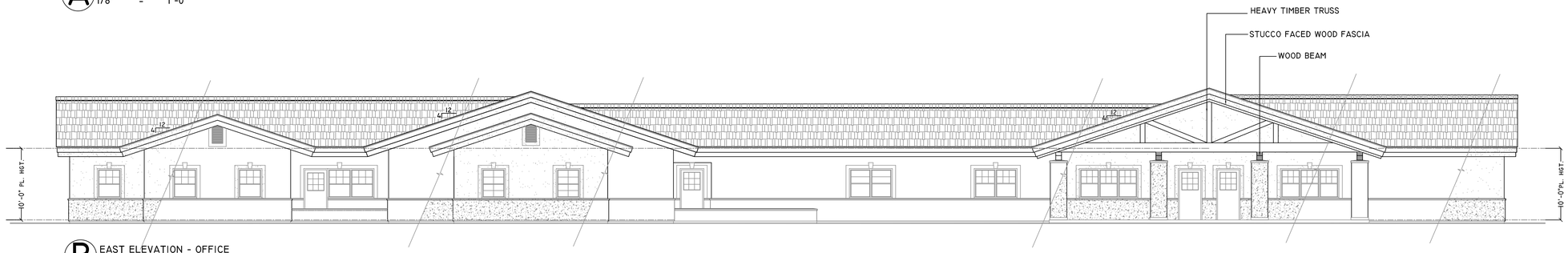

B EAST ELEVATION - OFFICE
1/8" = 1'-0"

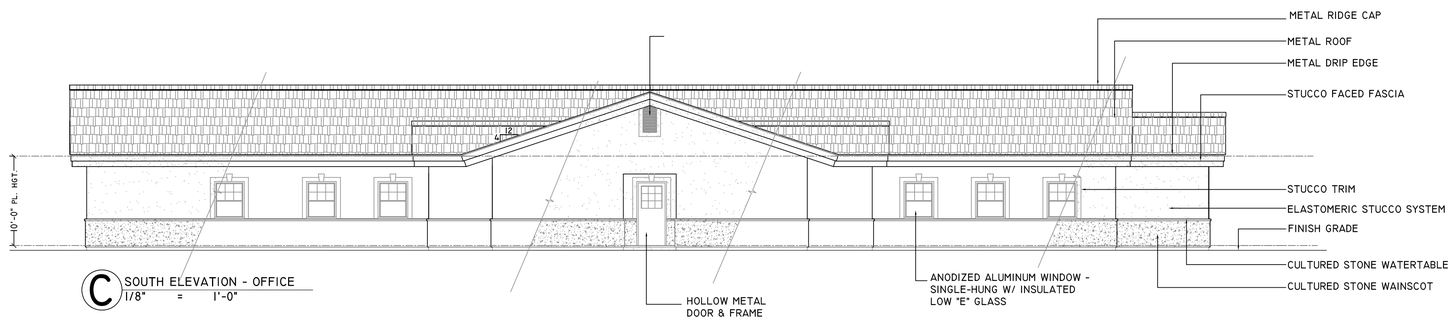

C SOUTH ELEVATION - OFFICE
1/8" = 1'-0"

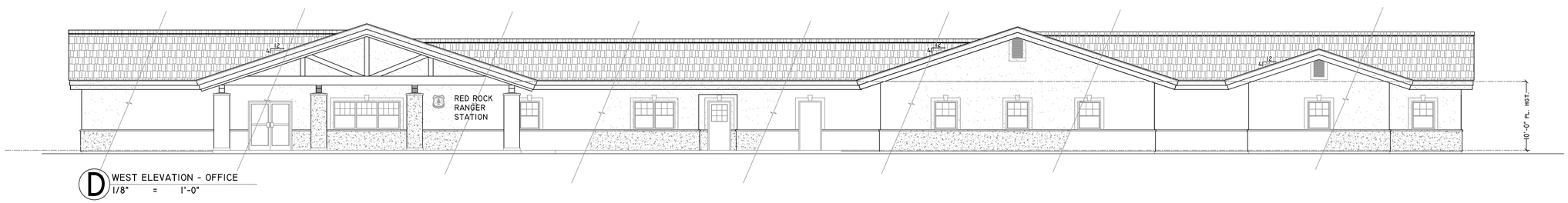

D WEST ELEVATION - OFFICE
1/8" = 1'-0"

JUNE 1, 2006

U.S. DEPARTMENT OF AGRICULTURE
FOREST SERVICE
R-3
SOUTHWESTERN REGION

DESIGN/DRAWN:	BILL CARLSON
CHECKED:	DOUG DENK
FACILITY REVIEW:	BEN MARTINEZ
UNION REVIEW:	
ACCESSIBILITY REVIEW:	

Forest: COCONINO NATIONAL FOREST

Project Name: NEW OFFICE, VISITOR CONTACT AND WAREHOUSE BUILDINGS FOR THE RED ROCK R.D.

Sheet Title: EXTERIOR ELEVATIONS - OFFICE BUILDING

Scale: AS SHOWN

Sheet: A3.2

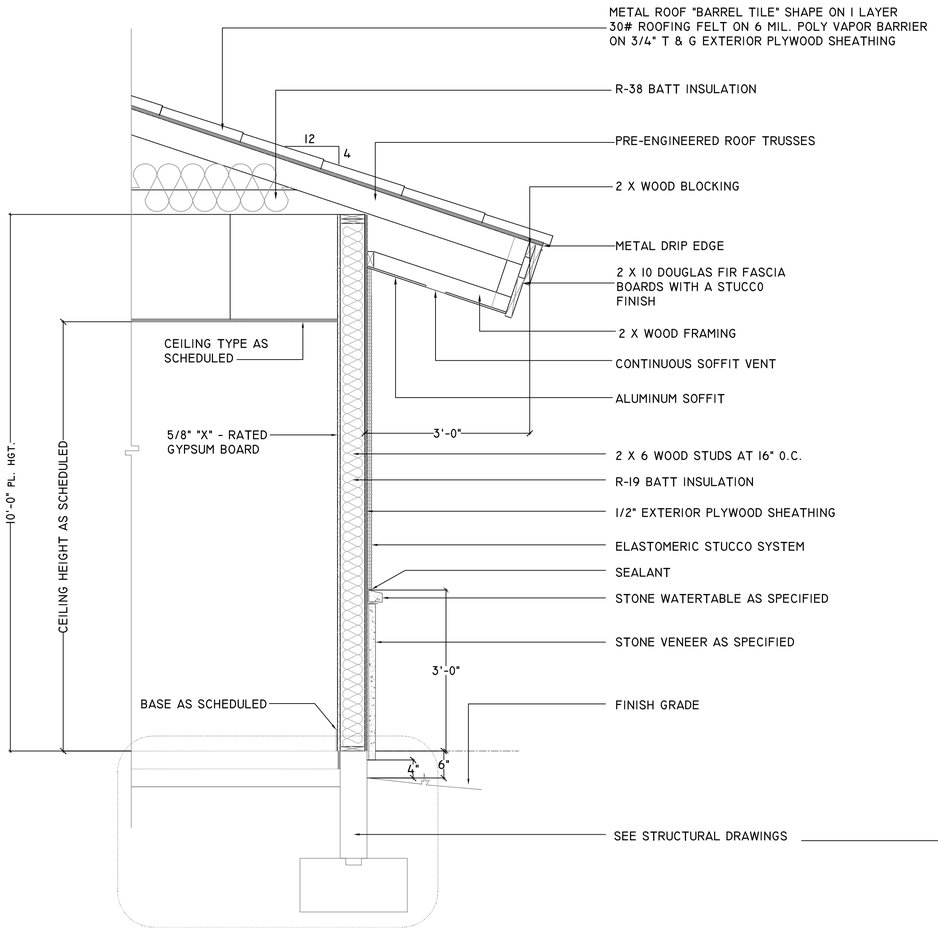

A TYPICAL WALL SECTION AT PRE-ENGINEERED TRUSSES AT OFFICE BUILDING

3/4" = 1'-0"

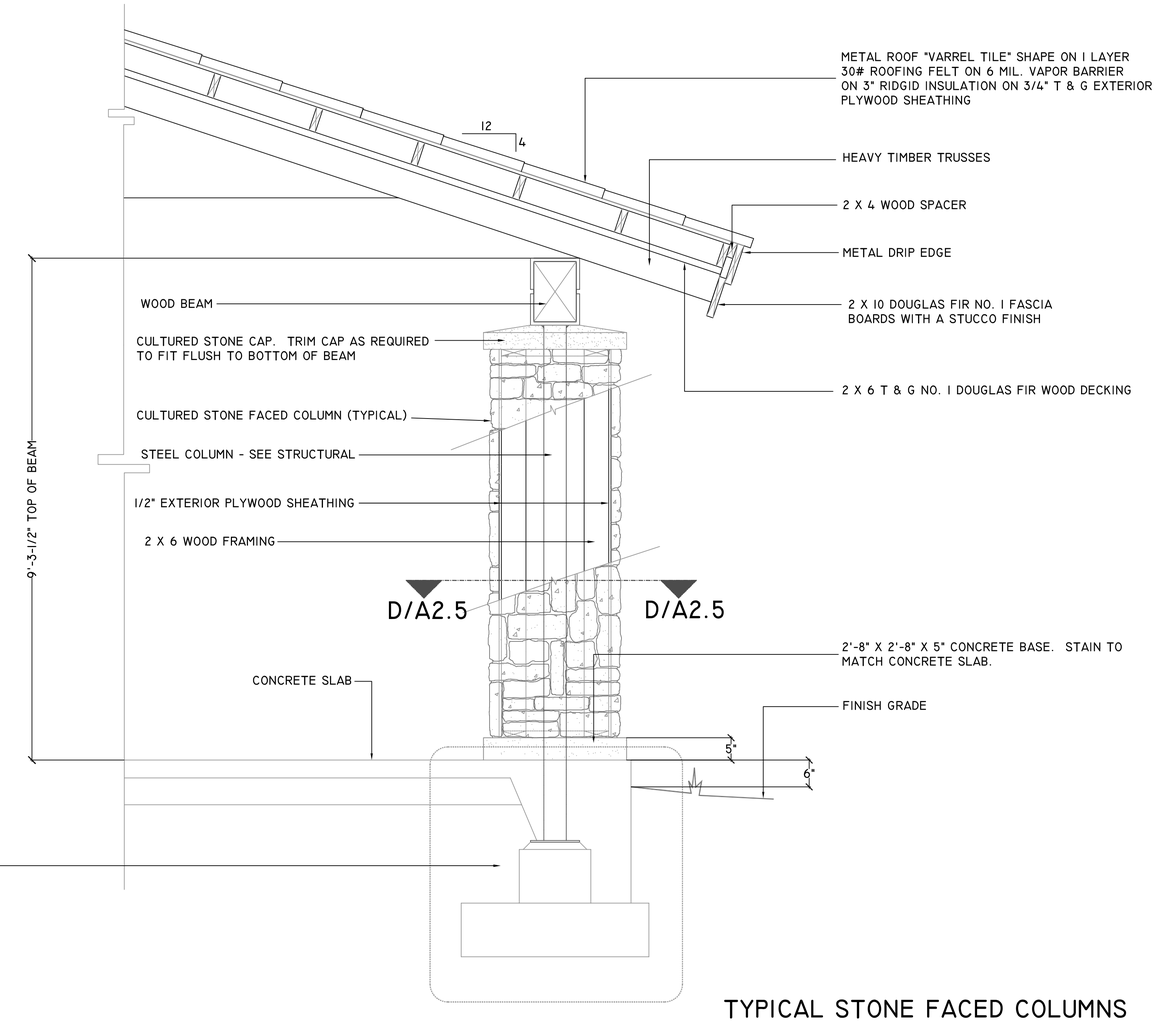

D TYPICAL STONE FACED COLUMNS AT PORCH & PATIO OF OFFICE BLDG.

3/4" = 1'-0"

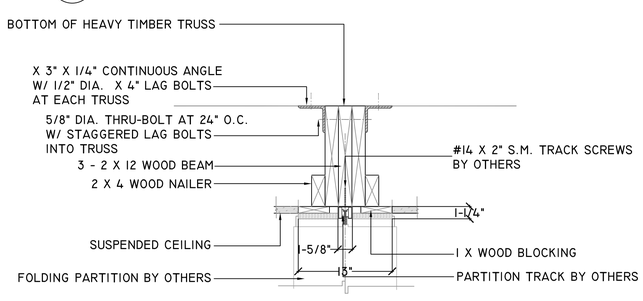

B HEAD AT FOLDING PARTITION

1-1/2" = 1'-0"

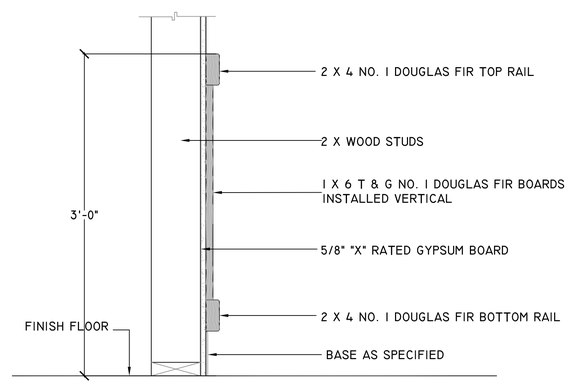

C DETAIL OF CHAIR RAIL & PANELING

1-1/2" = 1'-0"

JUNE 1, 2006

U.S. DEPARTMENT OF AGRICULTURE
FOREST SERVICE
R-3
SOUTHWESTERN REGION

DESIGN/DRAWN:	BILL CARLSON
CHECKED:	DOUG DENK
FACILITY REVIEW:	BEN MARTINEZ
UNION REVIEW:	
ACCESSIBILITY REVIEW:	

Forest: COCONINO NATIONAL FOREST

Project Name: NEW OFFICE, VISITOR CONTACT AND WAREHOUSE BUILDINGS FOR THE RED ROCK R.D.

Sheet Title: TYPICAL WALL SECTION AND DETAILS - OFFICE BUILDING

Scale: AS SHOWN

Sheet: A4.2

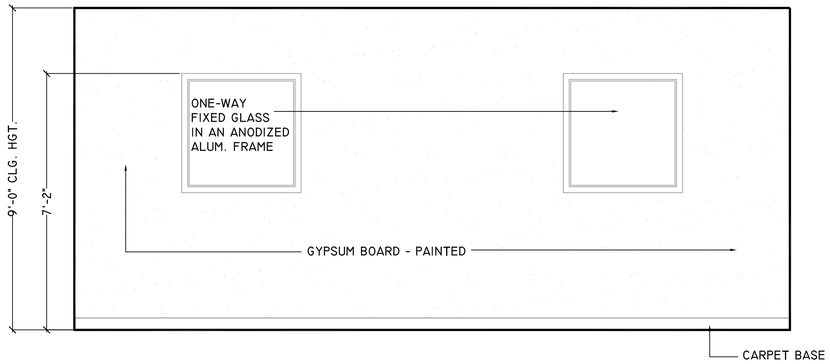

A WEST WALL - 3 BMO ASSIST. - 108
1/2" = 1'-0"

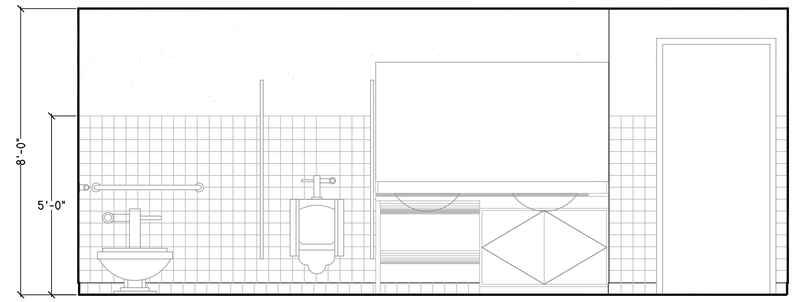

B EAST WALL - MEN - 113
1/2" = 1'-0"

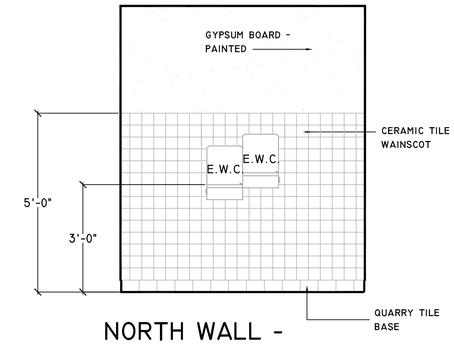

C NORTH WALL - VESTIBULE 114
1/2" = 1'-0"

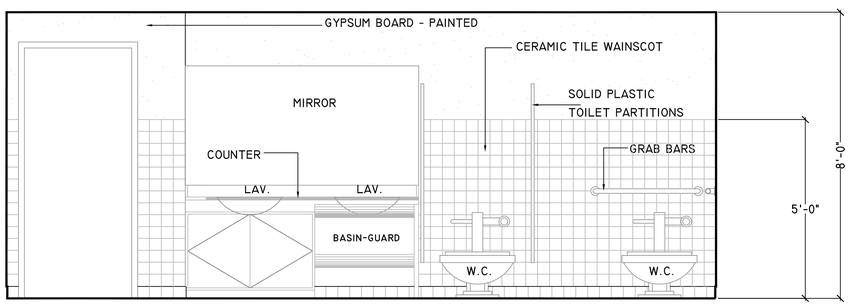

D WEST WALL - WOMEN - 115
1/2" = 1'-0"

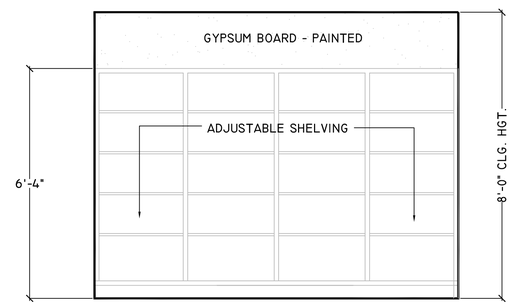

E SOUTH WALL - A/V STO. - 116
1/2" = 1'-0"

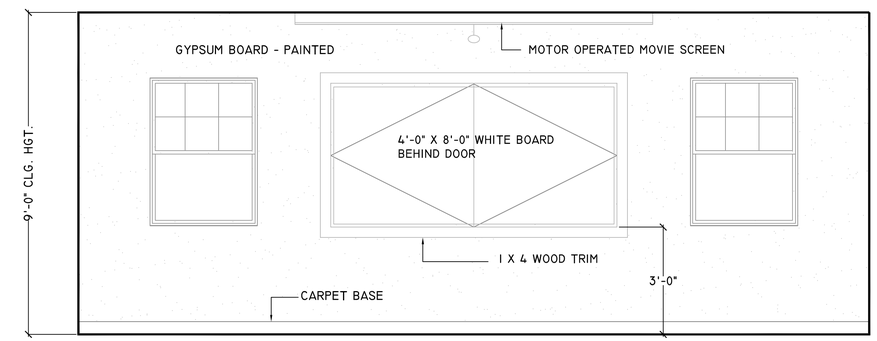

F NORTH WALL - CONF./TRAIN. ROOM - 117
1/2" = 1'-0"

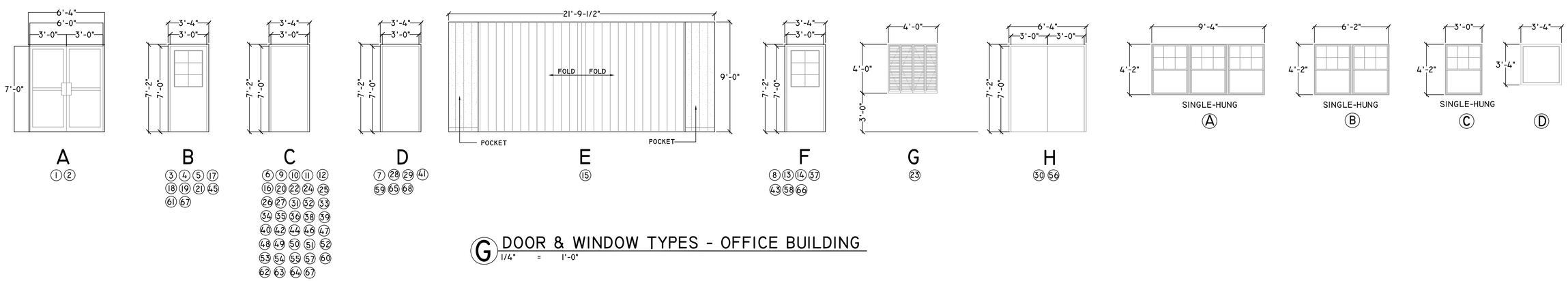

G DOOR & WINDOW TYPES - OFFICE BUILDING
1/4" = 1'-0"

JUNE 1, 2006

U.S. DEPARTMENT OF AGRICULTURE
FOREST SERVICE
R-3
SOUTHWESTERN REGION

DESIGN/DRAWN:	BILL CARLSON
CHECKED:	DOUG DENK
FACILITY REVIEW:	BEN MARTINEZ
UNION REVIEW:	
ACCESSIBILITY REVIEW:	

Forest: COCONINO NATIONAL FOREST

Project Name: NEW OFFICE, VISITOR CONTACT AND WAREHOUSE BUILDINGS FOR THE RED ROCK R.D.

Sheet Title: INTERIOR ELEVATIONS - OFFICE BUILDING

Scale: AS SHOWN

Sheet: A5.2

ROOM FINISH SCHEDULE

NO.	ROOM	FLOOR: 12" x 12" QUARRY TILE	FLOOR: SEALED CONCRETE	FLOOR: CARPET	FLOOR: REMOVEABLE FLOOR TILES	FLOOR: CERAMIC TILE	BASE: 5" X 6" QUARRY TILE	BASE: CARPET	BASE: NONE	BASE: CERAMIC TILE	N. WALL: 5/8" GYPSUM BOARD I X 6 T & G BDS/CHAIR RAIL	N. WALL: EXPOSED CMU	N. WALL: CERAMIC TILE	E. WALL: 5/8" GYPSUM BOARD I X 6 T & G BDS/CHAIR RAIL	E. WALL: EXPOSED CMU	E. WALL: CERAMIC TILE	S. WALL: 5/8" GYPSUM BOARD I X 6 T & G BDS/CHAIR RAIL	S. WALL: EXPOSED CMU	S. WALL: CERAMIC TILE	W. WALL: 5/8" GYPSUM BOARD I X 6 T & G BDS/CHAIR RAIL	W. WALL: EXPOSED CMU	W. WALL: CERAMIC TILE	WAINSCOT: 5'-0" HIGH CERAMIC TILE	CEILING: 2 X 4 MECH. SUSP.	CEILING: 2 X 6 DOUG. FIR WOOD DECK	CEILING: 5/8" TYPE "X" GYPSUM BOARD	CEILING: CONCRETE SLAB	CEILING: NONE	CLG.HT.: 10'-0"	CLG.HT.: 9'-0"	CLG.HT.: 8'-0"	CLG.HT.: VARIES	NO.	REMARKS
101	AIRLOK	F					F				PT	S					PT	S		PT	S				S									101	OFFICE DIRECTORY ON THE NORTH WALL
102	LOBBY/WAITING	F					F				PT	S					PT	S		PT	S				S									102	MILLWORK ON EAST WALL
103	BROCHURES	F					F				PT						PT			PT					S									103	MILLWORK ON EAST AND SOUTH WALLS
104	ADMIN. STORAGE		SE																								P							104	SHELVES ON NORTH, SOUTH & WEST WALLS
105	SAFES		SE								P	P		P	P		P	P		P	P							P						105	
106	BMO			F				F			P			P			P			P				F										106	
107	RECEPTIONISTS			F				F			P			P			P							F										107	MILLWORK ON ALL 4 WALLS
108	3 - BMO ASSISTANTS			F				F			P			P			P			P				F										108	
109	PASSAGE	F					F				P			P			P			P				F										109	
110	COMPUTER/TELE.			F					F		P			P			P			P						P								110	
111	ELECTRICAL CLOSET			F					F		P			P			P			P						P								111	
112	PASSAGE	F					F				P			P			P			P				F										112	
113	MEN				F					F	P		F	P		F	P		F	P		F	F			P								113	
114	VEST.	F					F				P		F	P			P			P			F		F									114	CERAMIC TILE WAINSCOT ON NORTH WALL ONLY
115	WOMEN				F					F	P		F	P		F	P		F	P		F	F			P								115	
116	A/V STORAGE			F				F			PT			PT			PT			PT				F										116	SHELVING ON THE SOUTH WALL
117	CONFERENCE/TRAINING			F	F			F			P			P			P			P				F										117	
118	MECH.		SE								P			P			P			P						P								118	
119	PASSAGE	F					F				P			P			P			P				F										119	
120	MAILROOM			F				F			P			P			P			P				F										120	MILLWORK ON ALL 4 WALLS
121	CENTRAL STOR.										P			P			P			P						P								121	SHELVING ON ALL 4 WALLS
122	PASSAGE	F					F				P			P			P			P				F										122	
123	KITCHEN	F					F				P			P			P			P				F										123	WALL AND BASE CABINETS ON ALL 4 WALLS
124	PASSAGE	F					F				P			P			P			P				F										124	
125	PASSAGE	F					F				P			P			P			P				F										125	
126	SPRINKLER SYSTEM		SE								P			P			P			P						P								126	
127	MECH.		SE								P			P			P			P						P								127	
128	PAO			F				F			P			P			P			P				F										128	
129	DISTRICT RANGER			F				F			P			P			P			P				F										129	
130	STORAGE FOR FRIENDS OF THE FOREST		SE								P			P			P			P						P								130	SHELVING ON NORTH, SOUTH & WEST WALLS
131	STORAGE			F				F			P			P			P			P						P								131	SHELF AND HANGING ROD ON SOUTH WALL
132	SMALL CONFERENCE ROOM			F				F			P			P			P			P				F										132	MILLWORK ON THE NORTH WALL
133	PASSAGE			F				F			P			P			P			P				F										133	
134	GENERAL PURPOSE ROOM			F				F			P			P			P			P				F										134	
135	PASSAGE	F					F				P			P			P			P				F										135	
136	JANITOR		SE								P			P			P			P						P								136	SHELVING ON NORTH, SOUTH & WEST WALLS
137	CENTRAL LIBRARY/LIBRARY			F				F			P			P			P			P				F										137	MOBILE FILING SYSTEM IN THIS ROOM
138	WATER HEATER		SE								P			P			P			P						P								138	SHELVING ON NORTH WALL
139	MECH.		SE								P			P			P			P						P								139	
140	STORAGE		SE								P			P			P			P						P								140	SHELVING ON NORTH & WEST WALLS
141	PASSAGE	F					F				P			P			P			P				F										141	
142	MAP STORAGE			F				F			P			P			P			P						P								142	SHELVING ON ALL 4 WALLS
143	OPEN OFFICE WORKSPACE			F					F		P			P			P			P				F										143	MILLWORK ON THE EAST WALL OF WORKSPACE 143
144	OFFICE			F					F		P			P			P			P				F										144	
145	OFFICE			F					F		P			P			P			P				F										145	
146	OFFICE			F					F		P			P			P			P				F										146	
147	OFFICE			F					F		P			P			P			P				F										147	
148	OFFICE			F					F		P			P			P			P				F										148	
149	MEN				F					F	P		F	P		F	P		F	P		F	F			P								149	
150	VEST.	F					F				P		F	P			P			P			F		F									150	
151	WOMEN				F			F		F	P		F	P		F	P		F	P		F	F			P								151	
152	OPEN OFFICE WORKSPACE			F				F			P			P			P			P				F										152	MILLWORK ON THE WEST WALL OF WORKSPACE 152
153	OFFICE			F				F			P			P			P			P				F										153	
154	OFFICE			F				F			P			P			P			P				F										154	
155	GENERAL PURPOSE ROOM			F				F			P			P			P			P				F										155	
156	PASSAGE	F					F				P			P			P			P				F										156	MILLWORK ON NORTH WALL
157	TECH. AREA	F					F				P			P			P			P				F										157	MILLWORK ON WEST WALL
158	MECH.		SE								P			P			P			P						P								158	
159	PROJECT ROOM			F				F			P			P			P			P				F										159	
160	PASSAGE	F					F				P			P			P			P				F										160	
161	STORAGE		SE								P			P			P			P						P								161	SHELVING ON NORTH & WEST WALLS
162	MECH.		SE								P			P			P			P						P								162	
163	FIRE PERSONNEL			F				F			P			P			P			P				F										163	
164	PASSAGE	F					F				P			P			P			P				F										164	
165	6 FIRE CREW			F				F			P			P			P			P				F										165	
166	LEO			F				F			P			P			P			P				F										166	
167	STORAGE		SE								P			P			P			P						P								167	
168	STORAGE		SE								P			P			P			P						P								168	
169	LEO			F				F			P			P			P			P				F										169	
170																																		170	
171																																		171	
172																																		172	
173																																		173	
174																																		174	

(P) PAINT
(S) STAIN
(U) UNFINISHED
(F) FACTORY FINISH
(SE) SEALED
(E) EPOXY
(B) BACK-UP
(PT) PLASTER TEXTURED

DOOR SCHEDULE

NO.	WIDTH	HGT.	THK.	HC/SC	TYPE	MATERIAL	REMARKS
1	3'-0"	7'-0"	1-3/4"			ANOD. ALUM	1 PAIR OF ALUM. STOREFRONT DOORS
2	3'-0"	7'-0"	1-3/4"			ANOD. ALUM	1 PAIR OF ALUM. STOREFRONT DOORS
3	3'-0"	7'-0"	1-3/4"	S.C.	STOCK	WOOD	STAIN GRADE BIRCH
4	3'-0"	7'-0"	1-3/4"	S.C.	STOCK	WOOD	STAIN GRADE BIRCH
5	3'-0"	7'-0"	1-3/4"	S.C.	STOCK	WOOD	STAIN GRADE BIRCH
6	3'-0"	7'-0"	1-3/4"	S.C.	STOCK	WOOD	STAIN GRADE BIRCH
7	3'-0"	7'-0"	1-3/4"	H.M.	STOCK	METAL	16 GA. H. M. DOOR AND FRAME
8	3'-0"	7'-0"	1-3/4"	H.M.	STOCK	METAL	16 GA. H. M. DOOR AND FRAME
9	3'-0"	7'-0"	1-3/4"	S.C.	STOCK	WOOD	STAIN GRADE BIRCH
10	3'-0"	7'-0"	1-3/4"	S.C.	STOCK	WOOD	STAIN GRADE BIRCH
11	3'-0"	7'-0"	1-3/4"	S.C.	STOCK	WOOD	STAIN GRADE BIRCH
12	3'-0"	7'-0"	1-3/4"	S.C.	STOCK	WOOD	STAIN GRADE BIRCH
13	3'-0"	7'-0"	1-3/4"	H.M.	STOCK	METAL	16 GA. H. M. DOOR AND FRAME
14	3'-0"	7'-0"	1-3/4"	H.M.	STOCK	METAL	16 GA. H. M. DOOR AND FRAME
15							CUSTOM FOLDING ACCORDIAN TYPE DOORS AS SPECIFIED
16	3'-0"	7'-0"	1-3/4"	S.C.	STOCK	WOOD	STAIN GRADE BIRCH
17	3'-0"	7'-0"	1-3/4"	S.C.	STOCK	WOOD	STAIN GRADE BIRCH
18	3'-0"	7'-0"	1-3/4"	S.C.	STOCK	WOOD	STAIN GRADE BIRCH
19	3'-0"	7'-0"	1-3/4"	S.C.	STOCK	WOOD	STAIN GRADE BIRCH
20	3'-0"	7'-0"	1-3/4"	S.C.	STOCK	WOOD	STAIN GRADE BIRCH
21	3'-0"	7'-0"	1-3/4"	S.C.	STOCK	WOOD	STAIN GRADE BIRCH
22	3'-0"	7'-0"	1-3/4"	S.C.	STOCK	WOOD	STAIN GRADE BIRCH
23	3'-0"	7'-0"	1-3/4"	S.C.	STOCK	WOOD	STAIN GRADE BIRCH
24	3'-0"	7'-0"	1-3/4"	S.C.	STOCK	WOOD	STAIN GRADE BIRCH
25	3'-0"	7'-0"	1-3/4"	S.C.	STOCK	WOOD	STAIN GRADE BIRCH
26	3'-0"	7'-0"	1-3/4"	S.C.	STOCK	WOOD	STAIN GRADE BIRCH
27	3'-0"	7'-0"	1-3/4"	S.C.	STOCK	WOOD	STAIN GRADE BIRCH
28	3'-0"	7'-0"	1-3/4"	H.M.	STOCK	METAL	16 GA. H. M. DOOR AND FRAME
29	3'-0"	7'-0"	1-3/4"	H.M.	STOCK	METAL	16 GA. H. M. DOOR AND FRAME
30	3'-0"	7'-0"	1-3/4"	H.M.	STOCK	METAL	1 PAIR OF 16 GA. H. M. DOORS AND FRAME
31	3'-0"	7'-0"	1-3/4"	S.C.	STOCK	WOOD	STAIN GRADE BIRCH
32	3'-0"	7'-0"	1-3/4"	S.C.	STOCK	WOOD	STAIN GRADE BIRCH
33	3'-0"	7'-0"	1-3/4"	S.C.	STOCK	WOOD	STAIN GRADE BIRCH
34	3'-0"	7'-0"	1-3/4"	S.C.	STOCK	WOOD	STAIN GRADE BIRCH
35	3'-0"	7'-0"	1-3/4"	S.C.	STOCK	WOOD	STAIN GRADE BIRCH
36	3'-0"	7'-0"	1-3/4"	S.C.	STOCK	WOOD	STAIN GRADE BIRCH
37	3'-0"	7'-0"	1-3/4"	H.M.	STOCK	METAL	16 GA. H. M. DOOR AND FRAME
38	3'-0"	7'-0"	1-3/4"	S.C.	STOCK	WOOD	STAIN GRADE BIRCH
39	3'-0"	7'-0"	1-3/4"	S.C.	STOCK	WOOD	STAIN GRADE BIRCH
40	3'-0"	7'-0"	1-3/4"	S.C.	STOCK	WOOD	STAIN GRADE BIRCH
41	3'-0"	7'-0"	1-3/4"	H.M.	STOCK	METAL	16 GA. H. M. DOOR AND FRAME
42	3'-0"	7'-0"	1-3/4"	S.C.	STOCK	WOOD	STAIN GRADE BIRCH
43	3'-0"	7'-0"	1-3/4"	H.M.	STOCK	METAL	16 GA. H. M. DOOR AND FRAME
44	3'-0"	7'-0"	1-3/4"	S.C.	STOCK	WOOD	STAIN GRADE BIRCH
45	3'-0"	7'-0"	1-3/4"	S.C.	STOCK	WOOD	STAIN GRADE BIRCH
46	3'-0"	7'-0"	1-3/4"	S.C.	STOCK	WOOD	STAIN GRADE BIRCH
47	3'-0"	7'-0"	1-3/4"	S.C.	STOCK	WOOD	STAIN GRADE BIRCH
48	3'-0"	7'-0"	1-3/4"	S.C.	STOCK	WOOD	STAIN GRADE BIRCH
49	3'-0"	7'-0"	1-3/4"	S.C.	STOCK	WOOD	STAIN GRADE BIRCH
50	3'-0"	7'-0"	1-3/4"	S.C.	STOCK	WOOD	STAIN GRADE BIRCH
51	3'-0"	7'-0"	1-3/4"	S.C.	STOCK	WOOD	STAIN GRADE BIRCH
52	3'-0"	7'-0"	1-3/4"	S.C.	STOCK	WOOD	STAIN GRADE BIRCH
53	3'-0"	7'-0"	1-3/4"	S.C.	STOCK	WOOD	STAIN GRADE BIRCH
54	3'-0"	7'-0"	1-3/4"	S.C.	STOCK	WOOD	STAIN GRADE BIRCH
55	3'-0"	7'-0"	1-3/4"	S.C.	STOCK	WOOD	STAIN GRADE BIRCH
56	3'-0"	7'-0"	1-3/4"	H.M.	STOCK	METAL	1 PAIR OF 16 GA. H. M. DOORS AND FRAME
57	3'-0"	7'-0"	1-3/4"	S.C.	STOCK	WOOD	STAIN GRADE BIRCH
58	3'-0"	7'-0"	1-3/4"	H.M.	STOCK	METAL	16 GA. H. M. DOOR AND FRAME
59	3'-0"	7'-0"	1-3/4"	H.M.	STOCK	METAL	16 GA. H. M. DOOR AND FRAME
60	3'-0"	7'-0"	1-3/4"	S.C.	STOCK	WOOD	STAIN GRADE BIRCH
61	3'-0"	7'-0"	1-3/4"	S.C.	STOCK	WOOD	STAIN GRADE BIRCH
62	3'-0"	7'-0"	1-3/4"	S.C.	STOCK	WOOD	STAIN GRADE BIRCH
63	3'-0"	7'-0"	1-3/4"	S.C.	STOCK	WOOD	STAIN GRADE BIRCH
64	3'-0"	7'-0"	1-3/4"	S.C.	STOCK	WOOD	STAIN GRADE BIRCH
65	3'-0"	7'-0"	1-3/4"	H.M.	STOCK	METAL	16 GA. H. M. DOOR AND FRAME
66	3'-0"	7'-0"	1-3/4"	H.M.	STOCK	METAL	16 GA. H. M. DOOR AND FRAME
67	3'-0"	7'-0"	1-3/4"	S.C.	STOCK	WOOD	STAIN GRADE BIRCH
68	3'-0"	7'-0"	1-3/4"	H.M.	STOCK	METAL	16 GA. H. M. DOOR AND FRAME

WINDOW SCHEDULE

NO.	WIDTH	HGT.	TYPE	FRAME	REMARKS
A	9'-4"	4'-2"	SINGLE-HUNG	ANOD. ALUM.	INSULATED, LOW "E" GLASS
B	6'-2"	4'-2"	SINGLE-HUNG	ANOD. ALUM.	INSULATED, LOW "E" GLASS
C	3'-0"	4'-2"	SINGLE-HUNG	ANOD. ALUM.	INSULATED, LOW "E" GLASS
D	3'-4"	3'-4"	FIXED GLASS	ANOD.ALUM.	ONE-WAY TEMPERED GLASS

JUNE 1, 2006

U.S. DEPARTMENT OF AGRICULTURE
FOREST SERVICE
R-3
SOUTHWESTERN REGION

DESIGN/DRAWN: BILL CARLSON
CHECKED: DOUG DENK
FACILITY REVIEW: BEN MARTINEZ
UNION REVIEW:
ACCESSIBILITY REVIEW:

Forest: COCONINO NATIONAL FOREST

Project Name: NEW OFFICE, VISITOR CONTACT AND WAREHOUSE BUILDINGS FOR THE RED ROCK R.D.

Sheet Title: SCHEDULES - OFFICE BUILDING

Scale: AS SHOWN

Sheet: A6.3

KEYED PLUMBING NOTES:

WAREHOUSE

1. LPG-1, 500 GALLON PROPANE STORAGE TANK, COMPLETE WITH ALL ACCESSORIES FOR READY TO USE GAS SUPPLY SYSTEM. COORDINATE EXACT LOCATION AND CLEARANCES WITH ARCHITECT AND PROPANE PROVIDER PRIOR TO INSTALLATION. REFER TO DETAIL 8 ON SHEET P4.1.
2. PROVIDE SHUT-OFF-COCK, GAS METERING DEVICE AND GAS PRESSURE REGULATOR AT 11" W.C. OUTLET.
   358 CFH TOTAL LOAD.
   300 FOOT TOTAL DEVELOPED LENGTH.
3. 1-1/4" LPG LINE AT 11" W.C. ALL UNDERGROUND GAS PIPE TO BE NON-METALLIC P.E. PIPE WITH ANODELESS RISERS. PROVIDE #12 COPPER WIRE ATTACHED TO GAS LINE FOR TRACING LINE IN THE FUTURE. REFER TO SHEET P1.1 FOR CONTINUATION OF LPG LINE INSIDE BUILDING.
4. 4" (27 F.U.) WASTE LINE. REFER TO CIVIL DRAWINGS FOR CONTINUATION OF WASTE LINE 5'-0" BEYOND BUILDING. REFER SHEET P1.2 FOR CONTINUATION OF WASTE LINE INSIDE BUILDING.
5. 1-1/2" (44 F.U.) COLD WATER SERVICE TO NEW BUILDING. REFER TO CIVIL DRAWINGS FOR CONTINUATION OF WATER LINE 5'-0" BEYOND BUILDING. REFER TO SHEET P1.1 FOR CONTINUATION OF WATER LINE INSIDE BUILDING.

OFFICE BUILDING

6. LPG-2, 1000 GALLON PROPANE STORAGE TANK, COMPLETE WITH ALL ACCESSORIES FOR READY TO USE GAS SUPPLY SYSTEM. COORDINATE EXACT LOCATION AND CLEARANCES WITH ARCHITECT AND PROPANE PROVIDER PRIOR TO INSTALLATION. REFER TO DETAIL 8 ON SHEET P4.1.
7. PROVIDE SHUT-OFF-COCK, GAS METERING DEVICE AND GAS PRESSURE REGULATOR AT 11" W.C. OUTLET.
   682 CFH TOTAL LOAD.
   300 FOOT TOTAL DEVELOPED LENGTH.
8. 2" LPG LINE AT 11" W.C. ALL UNDERGROUND GAS PIPE TO BE NON-METALLIC P.E. PIPE WITH ANODELESS RISERS. PROVIDE #12 COPPER WIRE ATTACHED TO GAS LINE FOR TRACING LINE IN THE FUTURE. REFER TO SHEET P2.1 FOR CONTINUATION OF LPG LINE INSIDE BUILDING.
9. 4" (86 F.U.) WASTE LINE. REFER TO CIVIL DRAWINGS FOR CONTINUATION OF WASTE LINE 5'-0" BEYOND BUILDING. REFER SHEET P2.2 FOR CONTINUATION OF WASTE LINE INSIDE BUILDING.
10. 2" (123 F.U.) COLD WATER SERVICE TO NEW BUILDING. REFER TO CIVIL DRAWINGS FOR CONTINUATION OF WATER LINE 5'-0" BEYOND BUILDING. REFER TO SHEET P2.1 FOR CONTINUATION OF WATER LINE INSIDE BUILDING.

VISITOR CONTACT BUILDING

11. LPG-3, 500 GALLON PROPANE STORAGE TANK, COMPLETE WITH ALL ACCESSORIES FOR READY TO USE GAS SUPPLY SYSTEM. COORDINATE EXACT LOCATION AND CLEARANCES WITH ARCHITECT AND PROPANE PROVIDER PRIOR TO INSTALLATION. REFER TO DETAIL 8 ON SHEET P4.1.
12. PROVIDE SHUT-OFF-COCK, GAS METERING DEVICE AND GAS PRESSURE REGULATOR AT 11" W.C. OUTLET.
    506 CFH TOTAL LOAD.
    200 FOOT TOTAL DEVELOPED LENGTH.
13. 1-1/2" LPG LINE AT 11" W.C. ALL UNDERGROUND GAS PIPE TO BE NON-METALLIC P.E. PIPE WITH ANODELESS RISERS. PROVIDE #12 COPPER WIRE ATTACHED TO GAS LINE FOR TRACING LINE IN THE FUTURE. REFER TO SHEET P2.1 FOR CONTINUATION OF LPG LINE INSIDE BUILDING.
14. 4" (70 F.U.) WASTE LINE. REFER TO CIVIL DRAWINGS FOR CONTINUATION OF WASTE LINE 5'-0" BEYOND BUILDING. REFER SHEET P3.2 FOR CONTINUATION OF WASTE LINE INSIDE BUILDING.
15. 2" (109 F.U.) COLD WATER SERVICE TO NEW BUILDING. REFER TO CIVIL DRAWINGS FOR CONTINUATION OF WATER LINE 5'-0" BEYOND BUILDING. REFER TO SHEET P3.1 FOR CONTINUATION OF WATER LINE INSIDE BUILDING.

NOTE

ALL L.P.G. PIPING, TANKS, VALVES, REGULATORS, GAGES AS WELL AS THE INSTALLATION OF THE EQUIPMENT LISTED SHALL CONFORM TO STATE AND LOCAL REGULATIONS AND NFPA NO. 58 (STANDARD FOR THE STORAGE AND HANDLING OF LIQUEFIED PETROLEUM GASES). PROVIDE NECESSARY "NO SMOKING" SIGNS. ALL EQUIPMENT SHALL BE INSTALLED BY A LICENSED INSTALLER.

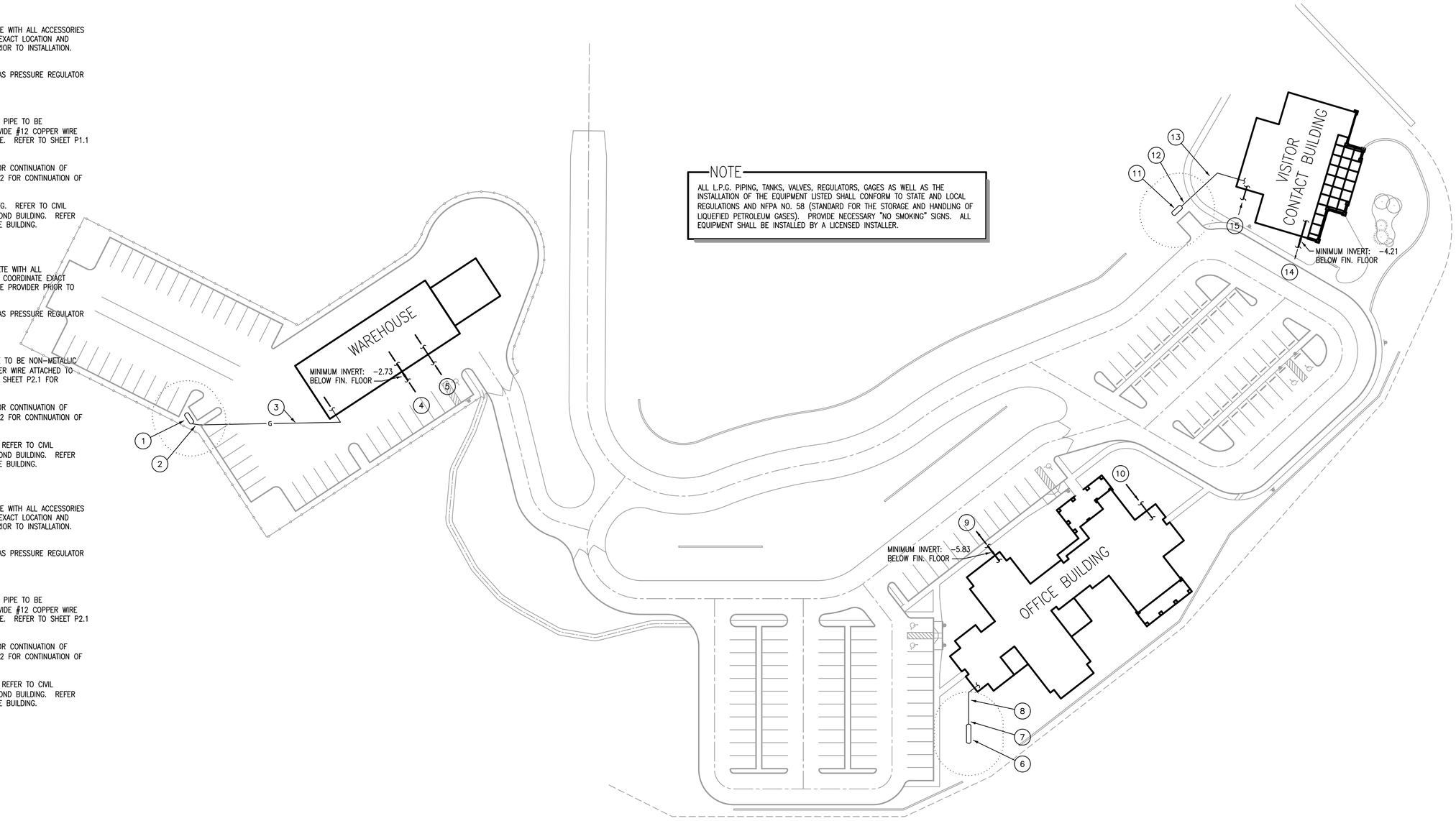

PLUMBING SITE PLAN

SCALE: 1" = 40' (1)

FINAL DESIGN 06/16/06

U.S. DEPARTMENT OF AGRICULTURE
FOREST SERVICE
R-3
SOUTHWESTERN REGION

Schwimmer ENGINEERS, Inc.
5055 W. Ray Road, Suite 20, Chandler, Arizona 85226
Phone: (480)968-6440; Email: Engr@SchwimmerAZ.com
SEI JOB #06016

DESIGN/DRAWN:	RON ROSS
CHECKED:	RAY SCHWIMMER
FACILITY REVIEW:	
UNION REVIEW:	
ACCESSIBILITY REVIEW:	

Forest: COCONINO NATIONAL FOREST

Project Name: RED ROCK RANGER STATION
HWY 179, VILLAGE OF OAK CREEK, AZ

Sheet Title: PLUMBING SITE PLAN

Scale: AS SHOWN

Sheet: P0.1

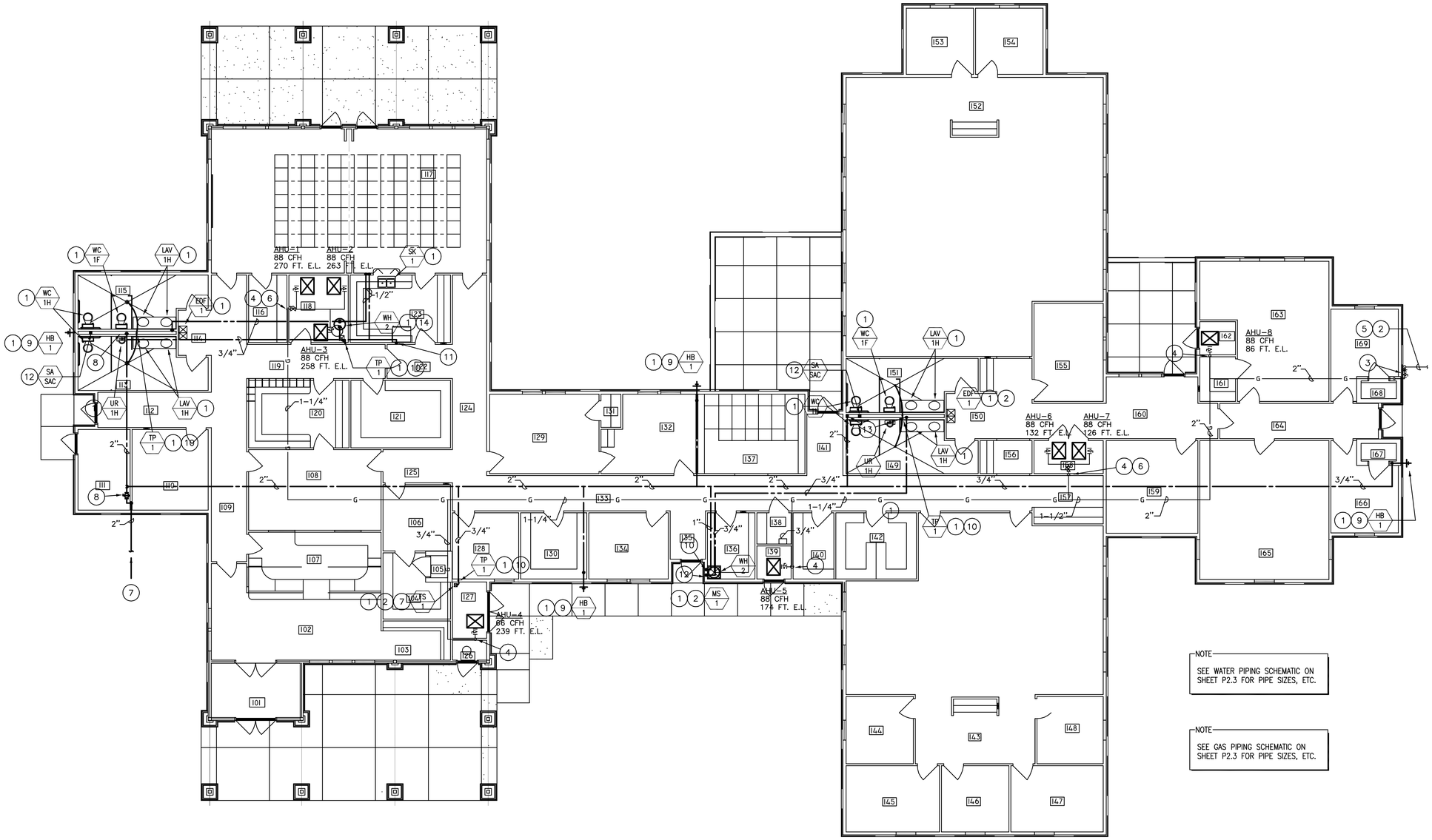

KEYED PLUMBING NOTES:

1. SEE PLUMBING FIXTURE SCHEDULE FOR SPECIFICATIONS ON PLUMBING FIXTURE INDICATED.
2. 2" GAS LINE @ 11" W.C. FROM LPG TANK. SEE ARCHITECTURAL SITE PLAN FOR TANK LOCATION.
3. PROVIDE AND INSTALL SHUT-OFF COCK AND ISOLATING UNION +6" ABOVE GROUND. REFER TO DETAIL 5 ON SHEET P4.1.
   682 CFH TOTAL LOAD.
   300 FT. TOTAL DEV. LENGTH.
4. 3/4" GAS LINE DROP DOWN IN WALL VOID TO GAS USING APPLIANCE.
5. ALL GAS PIPING UNDER ASPHALT OR CONCRETE PAVING ADJOINING BUILDINGS MUST BE SLEEVED IN A GAS TIGHT VENTED PIPE, AS PER U.P.C. SECTION 1213 (b) (AMENDED).
6. EMERGENCY SOLENOID GAS SHUT-OFF VALVE. COORDINATE MECHANICAL AND ELECTRICAL WORK.
7. 2" COLD WATER SERVICE TO NEW BUILDING. SEE CIVIL DRAWINGS FOR CONTINUATION.
8. PROVIDE SHUT-OFF-VALVE IN VERTICAL RISER WITH ACCESS DOOR AS NECESSARY.
9. NON-FREEZE TYPE HOSE BIBB +12", WITH VACUUM BREAKER.
10. TRAP PRIMER WITH BALL VALVE, BACKFLOW PREVENTION DEVICE AND WITH 1/2" COLD WATER LINE TO FLOOR DRAIN (OR FLOOR SINK). PROVIDE WITH ACCESS DOOR (IN MENS RESTROOM SIDE).
11. PROVIDE 1/2" C.W. CAPPED STUB OUT IN WALL FOR REFRIGERATOR/ICE MAKER.
12. WATER HAMMER ARRESTER, "JAY R. SMITH" PDI TYPE 'C' (FIGURE 5020) WITH BALL VALVE, IN WALL WITH ACCESS DOOR.
13. HOT AND COLD WATER LINE DROP DOWN IN WALL TO PLUMBING FIXTURES.
14. ELECTRIC WATER HEATER. REFER TO DETAIL AND SCHEDULE ON SHEETS P4.1 AND P4.2 FOR WATER HEATER DATA.

NOTE
SEE WATER PIPING SCHEMATIC ON SHEET P2.3 FOR PIPE SIZES, ETC.

NOTE
SEE GAS PIPING SCHEMATIC ON SHEET P2.3 FOR PIPE SIZES, ETC.

OFFICE
DOMESTIC WATER AND GAS PLAN

SCALE: 1/8"=1'-0"

Registered Professional Engineer (Mechanical)
CERTIFICATE NO. 8007
RAY A. SCHWIMMER
Date Signed
ARIZONA, U.S.A.

U.S. DEPARTMENT OF AGRICULTURE
FOREST SERVICE
R-3
SOUTHWESTERN REGION

Schwimmer ENGINEERS, Inc.
5055 W. Ray Road, Suite 20, Chandler, Arizona 85226
Phone: (480)968-6440; Email: Engr@SchwimmerAZ.com
SEI JOB #06016

DESIGN/DRAWN:	RON ROSS
CHECKED:	RAY SCHWIMMER
FACILITY REVIEW:	
UNION REVIEW:	
ACCESSIBILITY REVIEW:	

Forest: COCONINO NATIONAL FOREST

Project Name: RED ROCK RANGER STATION
HWY 179, VILLAGE OF OAK CREEK, AZ

Sheet Title: OFFICE BUILDING - WATER AND GAS PIPING PLAN

Scale: AS SHOWN

Sheet: P2.1

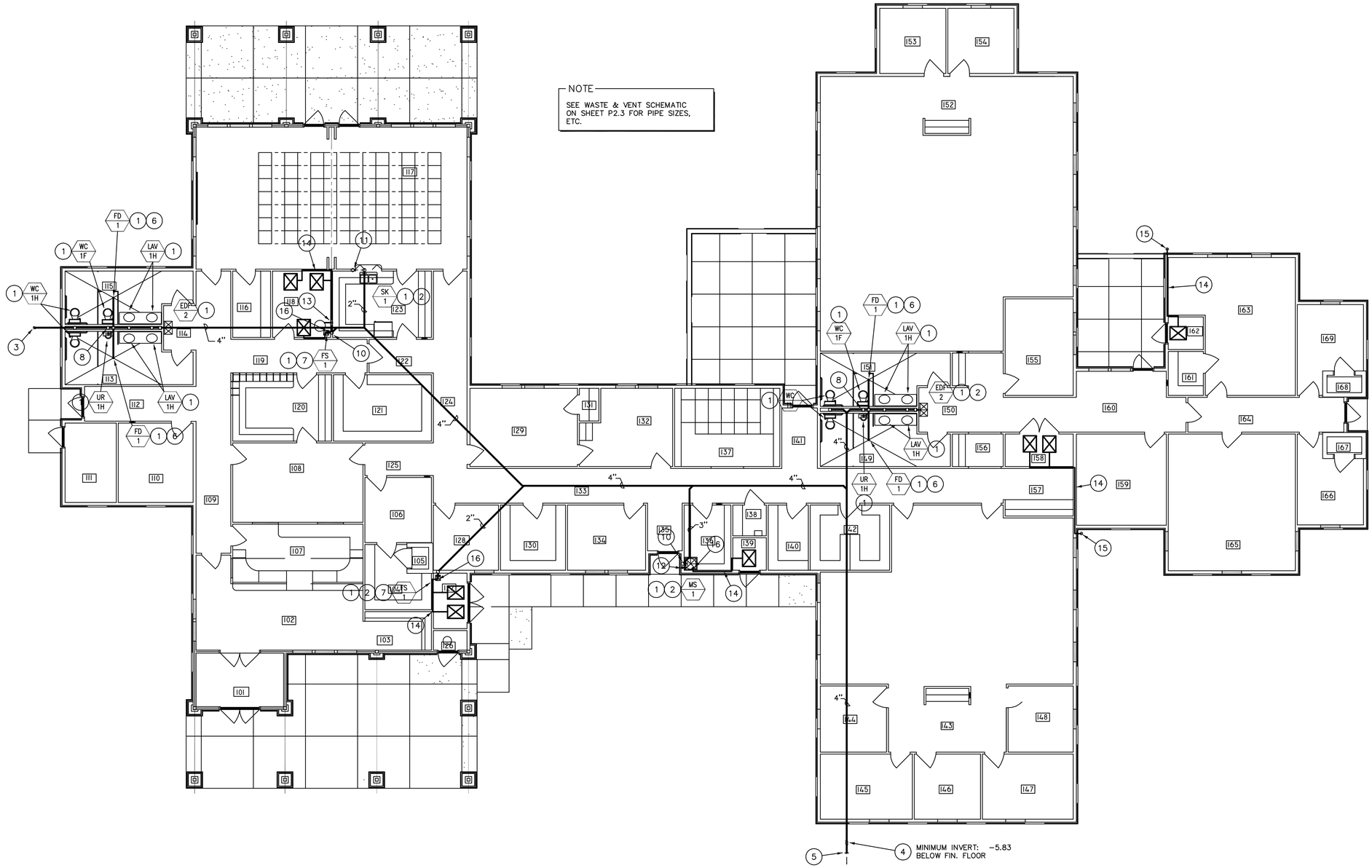

KEYED PLUMBING NOTES:

1. SEE PLUMBING FIXTURE SCHEDULE FOR SPECIFICATIONS ON PLUMBING FIXTURES INDICATED.
2. WALL CLEANOUT (TYPICAL) SEE DETAIL #6 ON SHEET P4.1 FOR CONSTRUCTION DETAILS.
3. SURFACE CLEANOUT (TYPICAL) SEE DETAIL #7 ON SHEET P4.1 FOR CONSTRUCTION DETAILS.
4. TWO WAY SURFACE CLEANOUT. SEE DETAIL #7 ON SHEET P4.1 FOR DETAILS.
5. 4" SEWER TAP TO BLDG., SEE CIVIL SITE PLAN FOR CONTINUATION.
6. 2" FLOOR DRAIN WITH TRAP PRIMER.
7. 2" FLOOR SINK, WITH TRAP PRIMER. NOTE COORDINATE EXACT LOCATION EQUIPMENT AND WITH ARCHITECT.
8. 3" VENT THRU ROOF.
   NOTE: TERMINATE MINIMUM OF 10'-0" FROM ANY AIR INTAKES OR OPENINGS INTO THE BUILDING.
9. 2" VENT THRU ROOF.
   NOTE: TERMINATE MINIMUM OF 10'-0" FROM ANY AIR INTAKES OR OPENINGS INTO THE BUILDING.
10. 1-1/2" VENT THRU ROOF.
    NOTE: TERMINATE MINIMUM OF 10'-0" FROM ANY AIR INTAKES OR OPENINGS INTO THE BUILDING.
11. OFF-SET VENT FROM WINDOW.
12. FULL SIZE P & T RELIEF DRAIN LINE TO TERMINATE AT MOP SINK WITH TURN DOWN AND AIR BREAK.
13. FULL SIZE P & T RELIEF DRAIN LINE TO TERMINATE AT FLOOR SINK WITH TURN DOWN AND AIR BREAK.
14. TYPE 'M' COPPER CONDENSATE DRAIN PIPING FROM UNIT DRAIN CONNECTION. SLOPE PIPING AT 1/8" PER FOOT MINIMUM AS SHOWN. PROVIDE VENTED TRAP WITH CLEANOUT AT UNIT CONNECTION AS REQUIRED BY UNIT MANUFACTURER.
15. RUN CONDENSATE DRAIN PIPING DOWN IN WALL AND TERMINATE AT EXTERIOR OF BUILDING +6" ABOVE PLANTER AND TURN DOWN.
16. RUN CONDENSATE DRAIN PIPING DOWN IN WALL AND TERMINATE AT MOP SINK (OR FLOOR SINK) WITH TURN DOWN AND AIR BREAK.

OFFICE WASTE PLAN

SCALE: 1/8"=1'-0"

Registered Professional Engineer (Mechanical) CERTIFICATE NO. 8007 RAY A. SCHWIMMER Date Signed ARIZONA, U.S.A.

U.S. DEPARTMENT OF AGRICULTURE
FOREST SERVICE
R-3
SOUTHWESTERN REGION

Schwimmer ENGINEERS, Inc.
5055 W. Ray Road, Suite 20, Chandler, Arizona 85226
Phone: (480)968-6440; Email: Engr@SchwimmerAZ.com
SEI JOB #06016

DESIGN/DRAWN:	RON ROSS
CHECKED:	RAY SCHWIMMER
FACILITY REVIEW:	
UNION REVIEW:	
ACCESSIBILITY REVIEW:	

Forest: COCONINO NATIONAL FOREST

Project Name: RED ROCK RANGER STATION
HWY 179, VILLAGE OF OAK CREEK, AZ

Sheet Title: OFFICE BUILDING - WASTE FLOOR PLAN

Scale: AS SHOWN

Sheet: P2.2

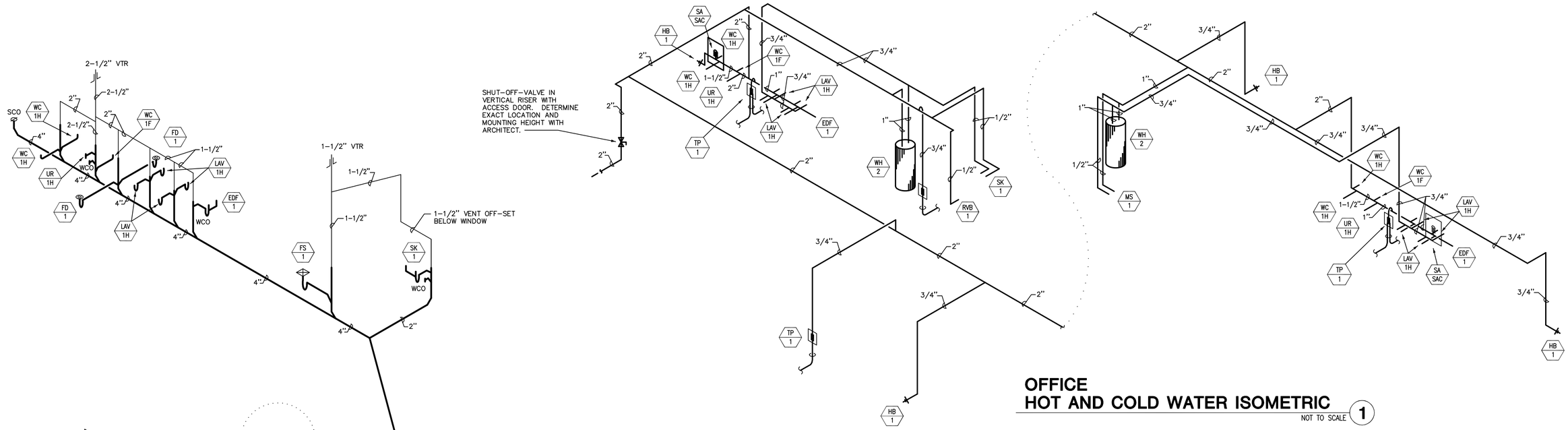

OFFICE
HOT AND COLD WATER ISOMETRIC

NOT TO SCALE (1)

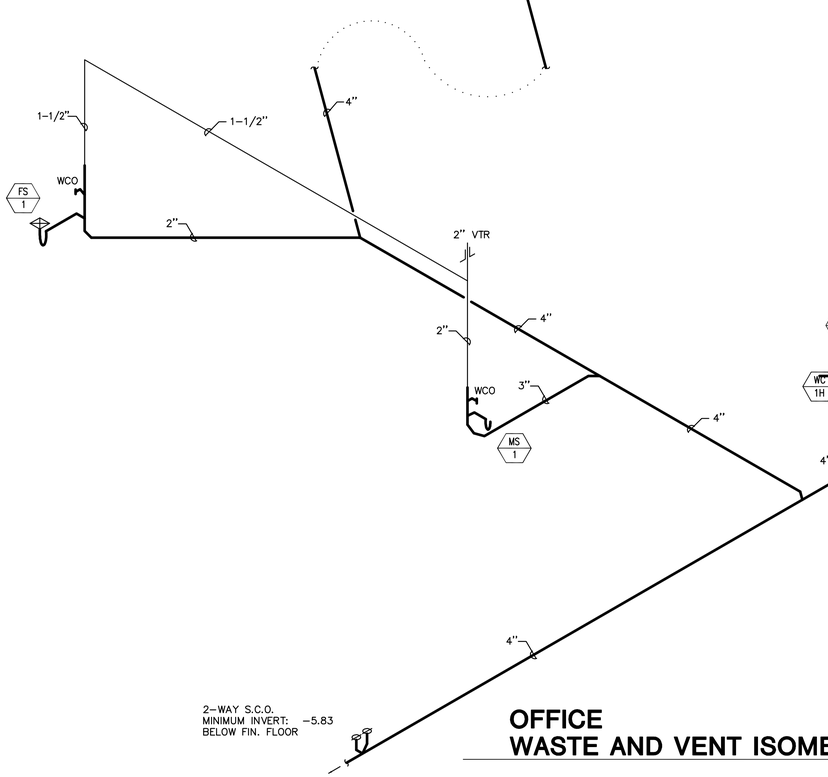

OFFICE
WASTE AND VENT ISOMETRIC

NOT TO SCALE (3)

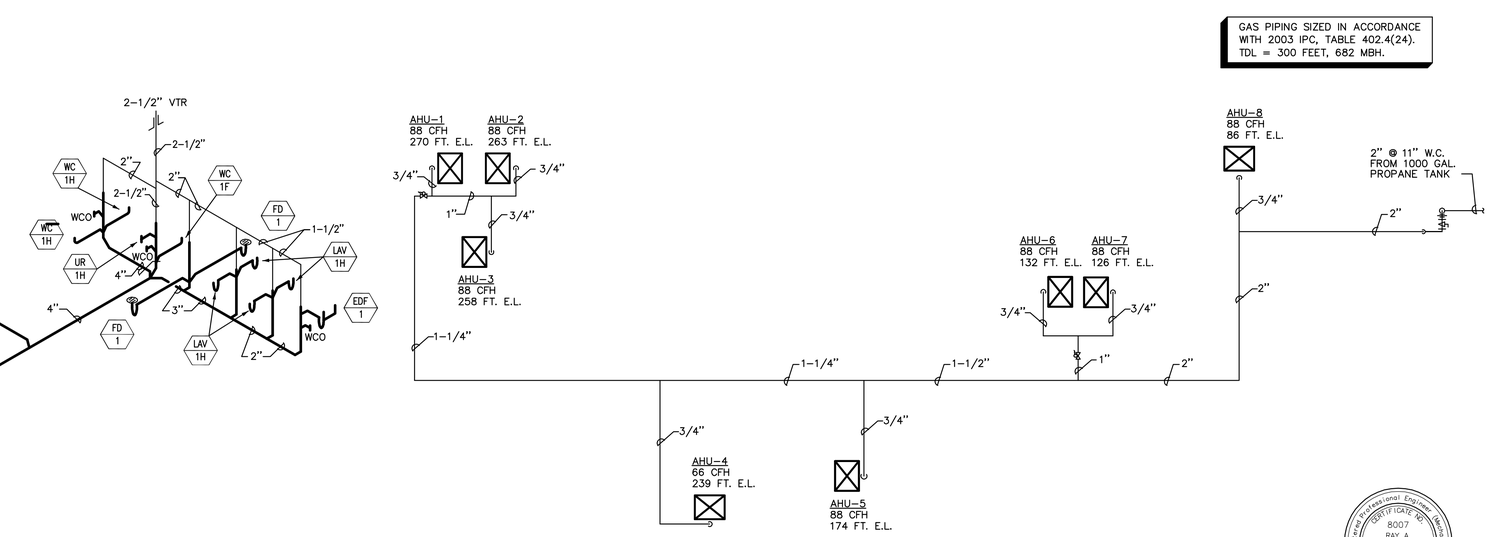

OFFICE
GAS PIPING DIAGRAM

NOT TO SCALE (2)

Registered Professional Engineer (Mechanical)
CERTIFICATE NO. 8007
RAY A. SCHWIMMER
Date Signed
ARIZONA, U.S.A.

U.S. DEPARTMENT OF AGRICULTURE
FOREST SERVICE
R-3
SOUTHWESTERN REGION

Schwimmer ENGINEERS, Inc.
5055 W. Ray Road, Suite 20, Chandler, Arizona 85226
Phone: (480)968-6440; Email: Engr@SchwimmerAZ.com
SEI JOB #06016

DESIGN/DRAWN:	RON ROSS
CHECKED:	RAY SCHWIMMER
FACILITY REVIEW:	
UNION REVIEW:	
ACCESSIBILITY REVIEW:	

Forest: COCONINO NATIONAL FOREST

Project Name: RED ROCK RANGER STATION
HWY 179, VILLAGE OF OAK CREEK, AZ

Sheet Title: OFFICE BUILDING - PLUMBING SCHEMATICS

Scale: AS SHOWN

Sheet: P2.3

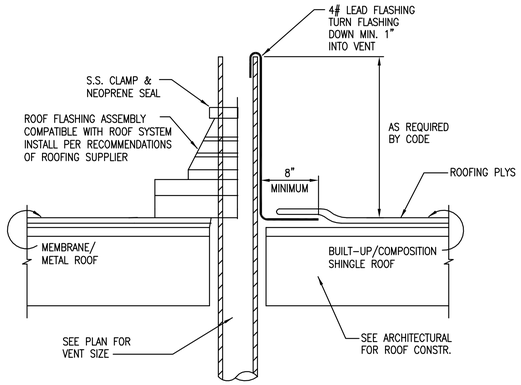

VENT FLASHING DETAIL

NOT TO SCALE (1)

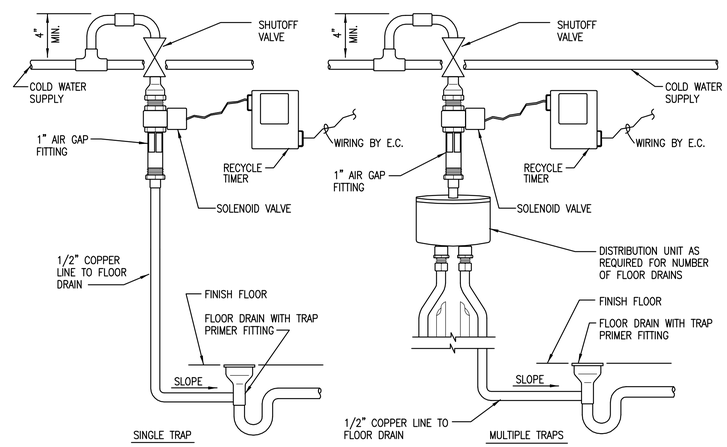

ELECTRONIC TRAP PRIMER DETAIL

NOT TO SCALE (2)

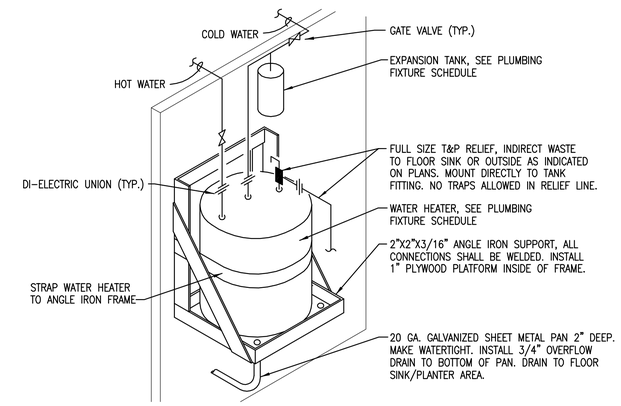

WALL MOUNTED ELECTRIC WATER HEATER DETAIL

NOT TO SCALE (3)

GENERAL PLUMBING NOTES

1. ENTIRE BUILDING PLUMBING SYSTEM SHALL COMPLY WITH ALL STATE AND LOCAL CODES. PLUMBING CONTRACTOR SHALL OBTAIN AND PAY FOR ALL PERMITS, FEES AND INSPECTIONS REQUIRED BY GOVERNING AUTHORITIES BEFORE STARTING PLUMBING WORK.

2. WATER HEATER FLUES, AND PLUMBING VENTS TO BE INSTALLED 10'-0" MINIMUM FROM ALL FRESH AIR INLETS.

3. PLUMBING CONTRACTOR TO FIELD VERIFY JOB SITE CONDITIONS AGAINST PLUMBING DRAWINGS BEFORE BEGINNING WORK.

4. PLUMBING CONTRACTOR SHALL COORDINATE LOCATION AND TYPE OF ACCESS PANELS FOR PLUMBING EQUIPMENT WITH THE GENERAL CONTRACTOR PRIOR TO CONSTRUCTION.

5. ALL PIPE INSULATION SHALL HAVE A FLAME SPREAD RATING OF 25 OR LESS, AND A SMOKE DEVELOPED RATING OF 50 OR LESS.

6. PLUMBING CONTRACTOR SHALL FURNISH AND INSTALL TYPE "M" COPPER HVAC CONDENSATE/OVERFLOW DRAINS WITH P-TRAP FROM A/C UNITS TO APPROVED LAV TAIL PIECE, FLOOR SINK, OR DRAIN POINT, AS INDICATED. PROVIDE CLEANOUTS AT EACH CHANGE IN DIRECTION AND SLOPE LINE AT MIN. 1/8" PER FOOT.

7. THE PLUMBING CONTRACTOR SHALL COORDINATE ALL PIPE ROUTING THROUGH STRUCTURAL SYSTEM WITH BOTH THE GENERAL CONTRACTOR, ELECTRICAL CONTRACTOR AND THE MECHANICAL CONTRACTOR PRIOR TO FABRICATION OF ANY PIPE SYSTEMS TO ENSURE ADEQUATE SPACE IS AVAILABLE FOR OTHER SYSTEMS IN THE BUILDING. CONTACT ENGINEER IMMEDIATELY IF STRUCTURAL LIMITATIONS WILL NOT ALLOW PIPING TO BE INSTALLED AS INDICATED ON THE DRAWINGS.

8. FURNISH AND INSTALL PVC TYPE COMBUSTION AIR AND FLUE PIPING THRU ROOF FOR GAS WATER HEATER(S). COORDINATE SIZE AND LOCATION WITH GENERAL CONTRACTOR. FLASHING ASSEMBLY SHALL BE APPROVED BY ROOFING MANUFACTURER.

9. PLUMBING EQUIPMENT MANUFACTURER'S LISTED ARE TO ESTABLISH QUALITY, CAPACITIES, AND/OR FUNCTIONAL REQUIREMENTS OF THE ITEM LISTED. SEE PLUMBING SPECIFICATIONS FOR PLUMBING EQUIPMENT MANUFACTURER'S APPROVED FOR THIS PROJECT.

10 ALL PLUMBING WORK SHALL COMPLY WITH THE 2000 INTERNATIONAL PLUMBING CODE, UNLESS NOTED OTHERWISE.

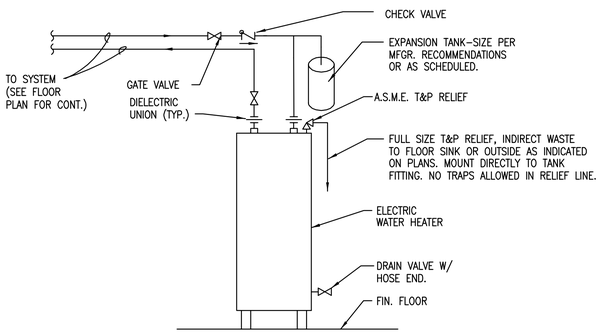

ELECTRIC WATER HEATER

NOT TO SCALE (4)

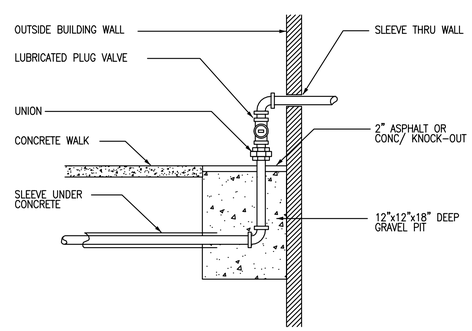

GAS SERVICE ENTRANCE

NOT TO SCALE (5)

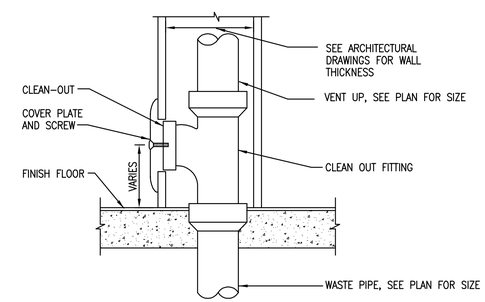

WALL CLEANOUT DETAIL

NOT TO SCALE (6)

GAS PIPING NOTES:

1. MINIMUM DEPTH OF GAS PIPING TO BE 18" BELOW GRADE, AND BELOW FROST LINE.

2. GAS PIPING SHALL NOT BE INSTALLED IN OR ON THE GROUND UNDER ANY BUILDING.

3. GAS PIPING SHALL NOT RUN IN HOLLOW CORE OF BLOCK.

4. PROVIDE SHUT-OFF COCK, UNION AND 6" LONG DIRT LEG WITH CAP AT EACH GAS LINE DROP TO APPLIANCE.

5. ALL GAS USING EQUIPMENT TO BE PROPANE FUEL.

6. DO NOT USE FLEXIBLE PIPE CONNECTIONS TO EQUIPMENT.

7. ALL GAS PIPING UNDER ASPHALT OR CONCRETE PAVING ADJOINING BUILDING MUST BE SLEEVED IN GAS TIGHT VENTED PIPE.

8. ALL GAS PIPING, MATERIALS, VALVES, FITTINGS, INSTALLATION AND TESTING SHALL COMPLY WITH CHAPTER 4, 2003 I.P.C.

9. VERIFY ALL GAS BTU/H INPUTS WITH ACTUAL BTU/H INPUT OF APPLIANCE SUPPLIED.

10. APPLIANCE CONNECTIONS SHALL, AT NO TIME, HAVE A DIAMETER LESS THAN THAT OF THE INLET CONNECTION TO THE APPLIANCE AS PROVIDED BY THE MANUFACTURER AND EACH APPLIANCE SHALL BE RIGIDLY CONNECTED TO THE GAS PIPING WITH MATERIALS AS PROVIDED IN THE I.P.C.

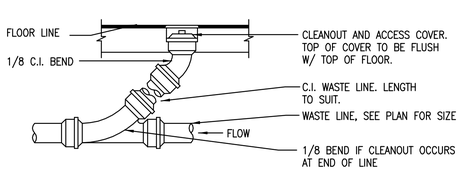

FLOOR CLEANOUT (FCO)

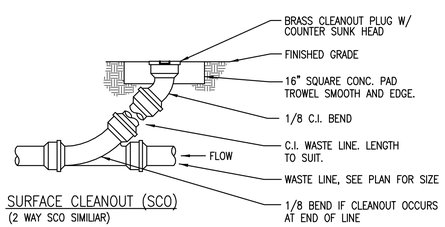

SURFACE CLEANOUT (SCO)
(2 WAY SCO SIMILIAR)

CLEANOUT DETAILS

NOT TO SCALE (7)

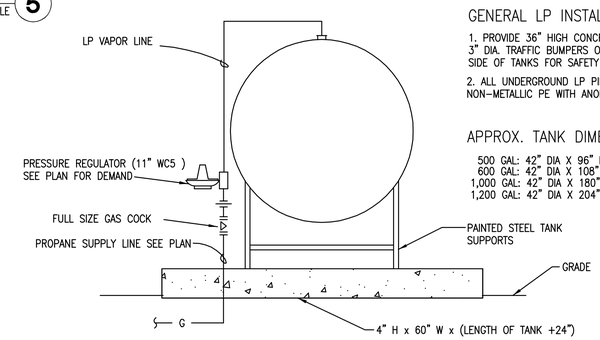

GENERAL LP INSTALLATION NOTES

1. PROVIDE 36" HIGH CONCRETE FILLED 3" DIA. TRAFFIC BUMPERS ON PARKING/STREET SIDE OF TANKS FOR SAFETY PROTECTION.

2. ALL UNDERGROUND LP PIPING SHALL BE NON-METALLIC PE WITH ANODELESS RISERS.

APPROX. TANK DIMENSIONS:

500 GAL: 42" DIA X 96" LONG
600 GAL: 42" DIA X 108" LONG
1,000 GAL: 42" DIA X 180" LONG
1,200 GAL: 42" DIA X 204" LONG

PROPANE TANK DETAIL (END VIEW)

NOT TO SCALE (8)

Registered Professional Engineer (Mechanical)
CERTIFICATE NO. 8007
RAY A. SCHWIMMER
Date Signed
ARIZONA, U.S.A.

U.S. DEPARTMENT OF AGRICULTURE
FOREST SERVICE
R-3
SOUTHWESTERN REGION

Schwimmer ENGINEERS, Inc.
5055 W. Ray Road, Suite 20, Chandler, Arizona 85226
Phone: (480)968-6440; Email: Engr@SchwimmerAZ.com
SEI JOB #06016

DESIGN/DRAWN:	RON ROSS
CHECKED:	RAY SCHWIMMER
FACILITY REVIEW:	
UNION REVIEW:	
ACCESSIBILITY REVIEW:	

Forest: COCONINO NATIONAL FOREST

Project Name: RED ROCK RANGER STATION
HWY 179, VILLAGE OF OAK CREEK, AZ

Sheet Title: PLUMBING DETAILS

Scale: AS SHOWN

Sheet: P4.1

PLUMBING FIXTURE SCHEDULE

SYMBOL	SPECIFICATION
WC 1F	FLOOR MOUNT FLUSH VALVE WATER CLOSET: AMERICAN STANDARD #2234.015, "MADERA EL 1.6"; OR CRANE #3-325E, "1.5 WHIRLTON"; FLOOR MOUONTED ELONGATED BOWL, 14" HIGH, WHITE, MAXIMUM 1.6 GAL/FLUSH, SIPHON JET ACTION, 1-1/2" TOP SPUD, MINIMUM WORKING PRESSURE 25 PSI, OPEN FRONT ELONGATED SEAT, SOLID PLASTIC WITH BUILT-IN BUMPERS, WITH STAINLESS STEEL HINGE POSTS, WHITE, CHURCH #9500C. EXPOSED FLUSH VALVE (1.6 GAL FLUSH), CHROME PLATED, 1" SCREW DRIVER ANGLE STOP WITH BACK CHECK, VACUUM BREAKER, WALL AND SPUD FLANGES, NON-HOLD OPEN HANDLE, SLOAN ROYAL #111, AND BOLT CAPS.
WC 1H	HANDICAP FLOOR MOUNT FLUSH VALVE WATER CLOSET: AMERICAN STANDARD 2305.100, "MADERA UNIVERSAL HEIGHT EL 1.6"; OR CRANE "3H-701E, "1.5 HYMONT", FLOOR MOUNTED ELONGATED BOWL, 18: HIGH, WHITE, MAXIMUM 1.6 GAL/FLUSH, SIPHON JET ACTION, 1-1/2" TOP SPUD, MINIMUM WORKING PRESSURE 25 PSI, OPEN FRONT ELONGATED SEAT, SOLID PLASTIC WITH BUILT-IN BUMPERS, WITH STAINLESS STEEL HINGE POSTS, WHITE, CHURCH #9500C. EXPOSED FLUSH VALVE (1.6 GAL FLUSH), CHROME PLATED, 1" SCREW DRIVER ANGLE STOP WITH BACK CHECK, VACUUM BREAKER, WALL AND SPUD FLANGES, NON-HOLD OPEN HANDLE, SLOAN ROYAL #111, AND BOLT CAPS. MUST MEET THE AMERICAN DISABILITIES ACT GUIDELINES AND ANSI A117.1 REQUIREMENTS FOR THE PHYSICALLY CHALLENGED.
UR 1H	HANDICAP URINAL: AMERICAN STANDARD #6501.010, "WASHBROOK", OR CRANE #7-'87E "CROMWELL" WALL HUNG, WASHOUT TYPE, WITH INTEGRAL TRAP. PROVIDE WITH CAST IRON WALL HANGERS BY J.R. SMITH, WADE OR ZURN, AND SLOAN ROYAL #186-1 (1 GAL/FLUSH) EXPOSED FLUSH VALVE. MOUNTING HEIGHT: RIM AT 15"-17" & VALVE HANDLE AT 44" ABOVE FINISH FLOOR. FIXTURE MUST MEET THE AMERICAN DISABILITIES ACT GUIDELINES AND ANSI A117.1 REQUIREMENTS FOR THE PHYSICALLY CHALLENGED.
LAV 1H	CULTURED MARBLE COUNTERTOP LAVATORY (ADA ACCESSIBLE): FURNISHED BY GENERAL CONTRACTOR. INTEGRAL CAST MARBLE 20"X 17" OVAL, WITH 4" CENTERS. FURNISH WITH SLOAN OPTIMA, MODEL EBF-85-4BDM, BATTERY POWERED, SENSOR ACTIVATED, ELECTRONIC FAUCET, WITH ADA ACCESSIBILITY. FAUCET COMPLETE WITH 4" TRIM PLATE, AND BELOW DECK MECHANICAL MIXING VALVE, WITH VANDAL-PROOF AERATOR WITH 0.5 GPM RESTRICTOR. FURNISH WITH #7723.018 CHROME PLATED OFFSET TYPE WHEELCHAIR GRID STRAINER AND TAILPIECE, MCGUIRE #8902 CHROME PLATED P-TRAP, AND TWO WHEEL HANDLE STOPS WITH SOLID TUBE RISERS. MOUNT AT HANDICAP HEIGHT (34"), INSULATE P-TRAP, AND HOT WATER FLEX LINE, OR PROVIDE TRUEBRO MODEL #101 LAV INSULATION KIT (602-968-8586). FIXTURE, FAUCET, AND APPURTENANCES MUST MEET THE AMERICAN DISABILITIES ACT GUIDELINES AND ANSI A117.1 REQUIREMENTS FOR THE PHYSICALLY CHALLENGED.
SK 1	KITCHEN SINK: ELKAY "LUSTERTONE" #GECR-3321, 20 GAUGE TYPE 304 STAINLESS STEEL, DOUBLE BOWL, SELF RIM. FURNISH WITH THREE FAUCET HOLES. PROVIDE DELTA #27T3944 FAUCET WITH 9" GOOSENECK SPOUT, 2.1 GPM FLOW RESTRICTOR, LK#35L BASKET STRAINER WITH ELBOW, C.P. TAILPIECE, AND TWO SOLID TUBE RISERS AND WHEEL HANDLE STOPS. FIXTURE, FAUCET, AND APPURTENANCES MUST MEET THE AMERICAN DISABILITIES ACT GUIDELINES AND ANSI A117.1 REQUIREMENTS FOR THE PHYSICALLY CHALLENGED. PROVIDE WITH TRUEBRO #36 BEIGE BASIN GUARD.
MS 1	FLOOR MOUNTED MOP SINK: FIAT MODEL #TSB-100, 24"X24"X12" TERRAZZO SERVICE BASIN WITH DELTA 28T9 WALL MOUNTED FAUCET WITH PAIL HOOK, INLINE VACUUM BREAKER, HOSE-END SPOUT, AND WALL BRACE. FURNISH WITH DELTA 28T910 S.S. MOP HANGER, AND DELTA 28T911 48" LONG HOSE, COUPLING, AND HANGER BRACKET. FURNISH WITH FIAT #1433-BB S.S. STRAINER, #QDC-3XH/QDC-3SN DRAIN CONNECTOR, AND #MSG2424 S.S. WALL GUARD.
SH 1H	HANDICAP SHOWER ASSEMBLY: FIAT MODEL #MSH-318S LH, ACRYLIC SHOWER MODULE, COMPLETE WITH FACTORY INSTALLED GRAB BARS, 1" STAINLESS STEEL CURTAIN ROD, SHOWER CURTAIN AND HOOKS, AND BUILT-IN SEAT. FURNISH WITH SIMMONS #1-117-FS, "SAFETYMIX"?PRESSURE BALANCING SHOWER VALVE WITH ADJUSTIBLE STOP, LEVERTROL DIVERTER WITH INTEGRAL VOLUME CONTROL, "SUPER" SHOWER HEAD WITH ARM AND FLANGE, AND WALL/HAND SHOWER , 24" SLIDE BAR, SWIVEL CONNECTOR, WALL CONNECTION AND FLANGE, AND 60 INCH MINIMUM FLEXIBLE METAL HOSE. FIXTURE, SHOWER HEAD, AND APPURTENANCES MUST MEET THE AMERICAN DISABILITIES ACT GUIDELINES AND ANSI A117.1 REQUIREMENTS FOR THE PHYSICALLY CHALLENGED.
FS 1	FLOOR SINK: J.R. SMITH #3100-Y, 8.5"X8.5"X6" DEEP, CAST IRON, ACID RESISTANT WITH FULL SIZE NICKEL BRONZE GRATE & RIM (AS REQUIRED), P-TRAP, AND DOME STAINER, TRAP PRIMER CONNECTION. TRAP SIZE AS INDICATED.
FD 1	FLOOR DRAIN: J.R. SMITH #2005-A, ROUND TOP (CONC. FLOOR),OR #2010-B, SQUARE TOP (CERAMIC TILE), SIZE AS INDICATED (SEE ARCHITECTURAL DWGS FOR REQUIRED TYPE), WITH ADJUSTABLE COLLAR, V.P. SCREWS, P-TRAP, AND TRAP PRIMER FITTING.
FD 2	HVAC DRAIN: J.R. SMITH #3510Y-P050, ROUND TOP (CONC. FLOOR), SIZE AS INDICATED. FURNISH WITH ADJUSTABLE COLLAR, 4" DIA. FUNNEL TOP, V.P. SCREWS, P-TRAP, AND TRAP PRIMER FITTING.
EDF 1	BARRIER-FREE ELECTRIC DRINKING FOUNTAIN: HAWS MODEL #HWBFABL. DUAL LEVEL, WALL MOUNTED TYPE. RECOVERY: 8.5 GPH @ 80 DEG INLET/50 DEG OUTLET TEMP. STAINLESS STEEL ENCLOSURE, 120 VOLT, 3.0 AMP COMPRESSOR. MOUNT UNIT PER LOCAL, STATE, OR FEDRAL CODES TO MEET THE AMERICANS WITH DISABILITIES ACT.
RP 1	RECIRCULATING PUMP: BELL & GOSSETT MODEL #SERIES 100-3/4, ALL BRONZE RECIRCULATING PUMP. CAPACITY: 6 GPM @ 8' TDH, 1/12 HP, 115 VOLT, 1 PH. TEFC MOTOR, AND HONEYWELL #L6006C, SURFACE MOUNT AQUASTAT (SET @ 105 DEGREES). PROVIDE AND INSTALL AS AN OWNER OPTION.
HB 1	NON-FREEZE WALL HYDRANT: WOODFORD AUTOMATIC DRAINING MODEL 65 WITH ANTI-SIPHON VACUUM BVREAKER, 3/4" HOSE THREAD NOZZLE, ONE PIECE VALVE PLUNGER TO CONTROL BOTH FLOW AND DRAIN FUCNTIONS, STAINLESS STEEL STEM, ROUGH BRASS FINISH ON BRASS CASTINGS. FURNISH WITH LOOSE KEY. WALL THICKNESS TO BE AS SCHEDULED ON ARCHITECTURAL DRAWINGS.
TP 1	ELECTRIC OPERATED TRAP PRIMER: PRECISION PLUMBING PRODUCTS #PR-500-115V, TIMER CONTROLLED, 120 VOLT, SOLENOID OPERATED TRAP PRIMER. FURNISH WITH 2 OR 4 FIXTURE DISTRIBUTION UNITS AS REQUIRED. INSTALL IN ACCESSIBLE LOCATION OR PROVIDE A 12"X 12" STAINLESS STEEL ACCESS PANEL WITH KEYED LOCK, AND FRAME TYPE SUITABLE FOR WALL FINISH. COORDINATE WITH ELECTRICAL CONTRACTOR ON PLACEMENT OF THE ELECTRICAL OUTLET TO SERVE PRIMER. PRIMER TO BE INSTALLED ONE (1) FOOT ABOVE FINISHED FLOOR FOR EVERY 20 FEET OF PRIMER DRAIN LINE.
SA SA-	WATERHAMMER ARRESTOR: J.R. SMITH "HYDROTROL" SERIES. SIZE PER PDI #WH-201 AS FOLLOWS: FOR 1-11 F.U., USE #5005 (SAA); FOR 12-32 F.U., USE #5010 (SAB); FOR 33-60 F.U.,USE #5020 (SAC). PROVIDE 12"X12" STAINLESS STEEL ACCESS PANEL WITH KEYED LOCK, WITH FRAME TYPE SUITABLE FOR WALL OR CEILING IN WHICH LOCATED.
EEW 1	WALL MOUNTED EMERGENCY EYEWASH: HAWS #72608, WALL MOUNTED WITH DUAL PVC SPRAY HEADS, SQUEEZE HANDLE VALVE, AND 8' OF 250 PSE HOSE WITH CHROME PLATED SWIVEL FITTING, AND PLASTIC DECK FLANGE. PROVIDE WITH OPTIONAL FOOT CONTROL ASSEMBLY TO ALLOW FOR USER TO ACTIVATE WITHOUT HANDS.
CB 1	CATCH BASIN: UTILITY VAULT COMPANY MODEL 2X3 MAG CATCH BASIN. FURNISH WITH 24"X36"X36" DEEP CONCRETE BASE, STEEL FRAME SUITABLE FOR FLUSH MOUNTING IN CONCRETE FLOOR, AND GALVANIZED STEEL GRATE.
RVB 1	REFRIGERATOR VALVE BOX: SPECIALTY PRODUCTS, PVC OUTLET BOX COMPLETE WITH COLD WATER BALL VALVE.
AC 1	AIR COMPRESSOR: DAYTON, MODEL SPEEDAIRE 4B233. STATIONARY VERTICAL AIR COMPRESSOR, 2.0 HP, 5.7 CFM AIR FLOW @ 90 PSI, 120/240 VOLTS, SINGLE PHASE, 15.7/7.5 AMPS, 30 GALLON TANK CAPACITY, 875 RPM. NOTE: COMPRESSORS ARE SHIPPED WITHOUT OIL. COMPRESSOR OIL NO. 4F743 IS RECOMMENDED. THESE UNITS DO NOT COME PRE-WIRED. WIRING NEEDS TO TAKE PLACE AT TIME OF INSTALLATION. CONTRACTOR SHALL SUPPLY AND INSTALL ALL NECESSARY GAUGES AND ACCESSORIES AS RECOMMENDED BY MANUFACTURER.
WH 1	ELECTRIC WATER HEATER NO. 1: STATE CO., MODEL NO. EPX-40-DXRT, 40 GALLON CAPACITY, GLASS LINING, AUTOMATIC CONTROLS, DOUBLE HEATING ELEMENTS, 4,500 WATTS LOWER AND 4,500 WATTS UPPER WITH INTERLOCKED THERMOSTATS TO ALLOW OPERATION OF ONLY ONE ELEMENT AT A TIME. COMPLETE HEATER SHALL BE UL APPROVED AND LISTED AND SHALL HAVE 'WATTS CO.' 10 XL (OR FACTORY SUPPLIED) PRESSURE AND TEMPERATURE RELIEF VALVE WITH DISCHARGE AS INDICATED ON DRAWINGS. 10 YEAR WARRANTY, 208 VOLT, SINGLE PHASE, RUUD AND A.O. SMITH ARE APPROVED. PROVIDE AND INSTALL 'AMTROL' EXPANSION TANK, SIZE AS REQUIRED BY MANUFACTURER.
WH 2	ELECTRIC WATER HEATER NO. 2: STATE CO., MODEL NO. P6-20-10MS K, 20 GALLON CAPACITY, GLASS LINING, AUTOMATIC CONTROLS, SINGLE HEATING ELEMENT, 1,650 WATTS. COMPLETE HEATER SHALL BE UL APPROVED AND LISTED AND SHALL HAVE 'WATTS CO.' 10 XL (OR FACTORY SUPPLIED) PRESSURE AND TEMPERATURE RELIEF VALVE WITH DISCHARGE AS INDICATED ON DRAWINGS. 10 YEAR WARRANTY, 120 VOLT, SINGLE PHASE, RUUD AND A.O. SMITH ARE APPROVED. PROVIDE AND INSTALL 'AMTROL' EXPANSION TANK, SIZE AS REQUIRED BY MANUFACTURER.
PT 1 PT 2	PROPANE STORAGE TANK: PROVIDE ASME 250# RATED AND STAMPED HORIZONTAL STEEL STORAGE TANK OF FOLLOWING CAPACITY: WAREHOUSE & VISITOR BLDGS (PT-1) SHALL BE 500 GALLON CAPACITY; ADMIN BLDG (PT-2) SHALL BE 1,000 GALLON CAPACITY. PROVIDE COMPLETE WITH ELEVATED SUPPORT LEGS, PRESSURE REGULATOR SIZED FOR BUILDING LOAD, SHUT-OFF VALVE(S), AND NECESSARY SAFETY EQUIPMENT TO MEET NFPA CODES.

WAREHOUSE BLDG FIXTURE COUNT

DESCRIPTION	QTY.	F.U. EACH		F.U. TOTAL	
		WASTE	WATER	WASTE	WATER
WC - FLUSH VALVE	2	6	10	12	20
LAVATORY	2	2	2	4	4
SHOWER, SINGLE STALL	2	2	4	4	8
ELEC. DRINKING FOUNTAIN	1	2	2	1	2
HOSE BIBB	2	-	5	-	10
FLOOR SINK /FLOOR DRAIN	3	2	-	6	-
TOTALS - SHOP BLDG				27	44

ADMINISTATION BUILDING FIXTURE COUNT

DESCRIPTION	QTY.	F.U. EACH		F.U. TOTAL	
		WASTE	WATER	WASTE	WATER
WC - FLUSH VALVE	6	6	10	36	60
URINAL (WALL MTD)	2	2	5	4	10
LAVATORY	8	2	2	16	16
JANITOR SINK (3" TRAP)	1	6	4	6	4
ELEC. DRINKING FOUNTAIN	4	2	2	8	8
HOSE BIBB	4	-	5	-	20
SINK	1	3	4	3	4
REFRIG/ICE MAKER	1	-	1	-	1
FLOOR SINK /FLOOR DRAIN	8	2	-	16	-
TOTALS - ADMIN BLDG				86	123

VISITOR BUILDING FIXTURE COUNT

DESCRIPTION	QTY.	F.U. EACH		F.U. TOTAL	
		WASTE	WATER	WASTE	WATER
WC - FLUSH VALVE	6	6	10	36	60
URINAL (WALL MTD)	2	2	5	4	10
LAVATORY	8	2	2	16	16
JANITOR SINK (3" TRAP)	1	6	4	6	4
ELEC. DRINKING FOUNTAIN	2	2	2	4	4
HOSE BIBB	3	-	5	-	15
FLOOR SINK /FLOOR DRAIN	2	2	-	4	-
TOTALS - VISITOR BLDG				70	109

CLEAN-OUT SIZES

SIZE OF PIPE	SIZE OF CLEAN-OUT
1 1/2"	1-1/2"
2"	1-1/2"
3"	2-1/2"
4" & LARGER	3-1/2"

ALL PLUMBING FIXTURES SHALL HAVE FLOW REDUCERS OR BE SO CONSTRUCTED TO MEET THE FOLLOWING REQUIREMENTS:

WATER CLOSETS (TANK TYPE)	1.6 GALLONS PER FLUSH
WATER CLOSETS (FLUSHOMETER)	1.6 GALLONS PER FLUSH
URINALS	1.0 GALLONS PER FLUSH
SHOWER HEADS	2.5 GPM AT 80 PSI
LAVATORY FAUCETS (RESIDENTIAL)	2.5 GPM AT 80 PSI
LAVATORY FAUCETS (PUBLIC)	0.5 GPM AT 80 PSI
RESIDENTIAL KITCHEN SINK FAUCETS	2.5 GPM AT 80 PSI
RESIDENTIAL BAR SINK FAUCETS	2.5 GPM AT 80 PSI

PUBLIC RESTROOMS: IN ADDITION TO THE MAXIMUM RATE OF FLOW, LAVATORY FAUCETS IN PUBLIC RESTROOMS SHALL BE OF THE METERING, SELF-CLOSING TYPE (INCLUDING HANDICAPPED LAVATORIES).

WAREHOUSE BLDG WATER CALCULATIONS

STREET PRESSURE 50 PSI

	FEET
HORIZONTAL PIPE LENGTH TAP TO METER	25
HORIZONTAL PIPE LENGTH METER TO LAST FIXTURE	125
VERTICAL RISE TAP TO HIGHEST FIXTURE	10
SUBTOTAL (	160)
EQUIVALENT LENGTH IN FITTINGS (.2 X SUBTOTAL)	32
TOTAL (	192)

HEIGHT 10 FT. X .43 = 4.3 PSI LOSS - STATIC

TOTAL FIXTURE UNITS 44 — 48 GPM.

SIZE ------ ITEM ------ PSI. LOSS

1-1/2" ---- BFPD ------- 8.0
1-1/2" ---- TAP --------- 0.9
1-1/2" ---- METER ------ 5.0
STATIC ----- 4.3
FIXTURE ----15.0
TOTAL ----- 33.2

DESIGN PRESS. 50 PSI
TOTAL LOSS 33.2
DIFFERENCE 16.8

DIFFERENCE 16.8 X 100 = 1680 ÷ TOTAL LENGTH 192 = 8 PSI ALLOWABLE DROP / 100'

SIZE	1/2"	3/4"	1"	1 1/4"	1 1/2"	2"
GPM	4	8	16	33	50	96
F.U. (F.T.)	5	11	22	60	127	360
F.U. (F.V.)	-	-	-	18	47	225

ASSUMED WATER PRESSURE. CONTRACTOR SHALL VERIFY ACTUAL WATER PRESSURE PRIOR TO CONSTRUCTION. IF PRESSURE IS LESS THAN 50 PSI, CONTRACTOR SHALL CONTACT ENGINEER FOR PIPE SIZING EVALUATION. IF PRESSURE EXCEEDS 80 PSI, A PRESSURE REDUCING VALVE SHALL BE PROVIDED AND SET TO 80 PSI. PIPING VELOCITY NOT TO EXCEED 8 FEET PER SECOND.

1-1/2" WATER TAP.
1-1/2" WATER METER.
1-1/2" COLD WATER SERVICE.

PROVIDE REDUCED BACKFLOW PRESSURE DEVICE (COORDINATE WITH CIVIL ENGINEER).

BEFORE THE LOCAL JURISDICTION WILL ACCEPT AN INSTALLED BACKFLOW DEVICE FOR APPROVAL, THE FOLLOWING MUST BE ACCOMPLISHED. THE DEVICE MUST BE TESTED BY A STATE CERTIFIED TESTER AND TEST RESULTS FORWARDED TO THE LOCAL JURISDICTION BACKFLOW SPECIALIST. THE LOCAL JURISDICTION WILL PROVIDE AN UP-TO-DATE LIST OF CERTIFIED TESTERS FROM WHICH TO BE SELECTED. TESTER FEES WILL BE AT THE EXPENSE OF THE INSTALLER.

ADMINISTATION BUILDING WATER CALCULATIONS

STREET PRESSURE 50 PSI

	FEET
HORIZONTAL PIPE LENGTH TAP TO METER	25
HORIZONTAL PIPE LENGTH METER TO LAST FIXTURE	200
VERTICAL RISE TAP TO HIGHEST FIXTURE	10
SUBTOTAL (	235)
EQUIVALENT LENGTH IN FITTINGS (.2 X SUBTOTAL)	35
TOTAL (	270)

HEIGHT 10 FT. X .43 = 4.3 PSI LOSS - STATIC

TOTAL FIXTURE UNITS 123 — 74 GPM.

SIZE ------ ITEM ------ PSI. LOSS

2" -------- BFPD ------- 8.0
2" -------- TAP --------- 0.6
2" -------- METER ------ 4.3
STATIC ----- 4.3
FIXTURE ----15.0
TOTAL ----- 32.2

DESIGN PRESS. 50 PSI
TOTAL LOSS 32.2
DIFFERENCE 17.8

DIFFERENCE 17.8 X 100 = 1780 ÷ TOTAL LENGTH 270 = 6 PSI ALLOWABLE DROP / 100'

SIZE	1/2"	3/4"	1"	1 1/4"	1 1/2"	2"
GPM	3	7	14	28	42	80
F.U. (F.T.)	4	9	20	47	92	280
F.U. (F.V.)	-	-	3	11	32	150

ASSUMED WATER PRESSURE. CONTRACTOR SHALL VERIFY ACTUAL WATER PRESSURE PRIOR TO CONSTRUCTION. IF PRESSURE IS LESS THAN 50 PSI, CONTRACTOR SHALL CONTACT ENGINEER FOR PIPE SIZING EVALUATION. IF PRESSURE EXCEEDS 80 PSI, A PRESSURE REDUCING VALVE SHALL BE PROVIDED AND SET TO 80 PSI. PIPING VELOCITY NOT TO EXCEED 8 FEET PER SECOND.

2" WATER TAP.
2" WATER METER.
2" COLD WATER SERVICE.

PROVIDE REDUCED BACKFLOW PRESSURE DEVICE (COORDINATE WITH CIVIL ENGINEER).

BEFORE THE LOCAL JURISDICTION WILL ACCEPT AN INSTALLED BACKFLOW DEVICE FOR APPROVAL, THE FOLLOWING MUST BE ACCOMPLISHED. THE DEVICE MUST BE TESTED BY A STATE CERTIFIED TESTER AND TEST RESULTS FORWARDED TO THE LOCAL JURISDICTION BACKFLOW SPECIALIST. THE LOCAL JURISDICTION WILL PROVIDE AN UP-TO-DATE LIST OF CERTIFIED TESTERS FROM WHICH TO BE SELECTED. TESTER FEES WILL BE AT THE EXPENSE OF THE INSTALLER.

VISITOR BUILDING WATER CALCULATIONS

STREET PRESSURE 50 PSI

	FEET
HORIZONTAL PIPE LENGTH TAP TO METER	25
HORIZONTAL PIPE LENGTH METER TO LAST FIXTURE	145
VERTICAL RISE TAP TO HIGHEST FIXTURE	10
SUBTOTAL (	180)
EQUIVALENT LENGTH IN FITTINGS (.2 X SUBTOTAL)	36
TOTAL (	216)

HEIGHT 10 FT. X .43 = 4.3 PSI LOSS - STATIC

TOTAL FIXTURE UNITS 109 — 70 GPM.

SIZE ------ ITEM ------ PSI. LOSS

2" -------- BFPD ------- 8.0
2" -------- TAP --------- 0.6
2" -------- METER ------ 3.9
STATIC ----- 4.3
FIXTURE ----15.0
TOTAL ----- 31.8

DESIGN PRESS. 50 PSI
TOTAL LOSS 31.8
DIFFERENCE 18.2

DIFFERENCE 18.2 X 100 = 1820 ÷ TOTAL LENGTH 216 = 8 PSI ALLOWABLE DROP / 100'

SIZE	1/2"	3/4"	1"	1 1/4"	1 1/2"	2"
GPM	4	8	16	33	50	96
F.U. (F.T.)	5	11	22	60	127	360
F.U. (F.V.)	-	-	-	18	47	225

ASSUMED WATER PRESSURE. CONTRACTOR SHALL VERIFY ACTUAL WATER PRESSURE PRIOR TO CONSTRUCTION. IF PRESSURE IS LESS THAN 50 PSI, CONTRACTOR SHALL CONTACT ENGINEER FOR PIPE SIZING EVALUATION. IF PRESSURE EXCEEDS 80 PSI, A PRESSURE REDUCING VALVE SHALL BE PROVIDED AND SET TO 80 PSI. PIPING VELOCITY NOT TO EXCEED 8 FEET PER SECOND.

2" WATER TAP.
2" WATER METER.
2" COLD WATER SERVICE.

PROVIDE REDUCED BACKFLOW PRESSURE DEVICE (COORDINATE WITH CIVIL ENGINEER).

BEFORE THE LOCAL JURISDICTION WILL ACCEPT AN INSTALLED BACKFLOW DEVICE FOR APPROVAL, THE FOLLOWING MUST BE ACCOMPLISHED. THE DEVICE MUST BE TESTED BY A STATE CERTIFIED TESTER AND TEST RESULTS FORWARDED TO THE LOCAL JURISDICTION BACKFLOW SPECIALIST. THE LOCAL JURISDICTION WILL PROVIDE AN UP-TO-DATE LIST OF CERTIFIED TESTERS FROM WHICH TO BE SELECTED. TESTER FEES WILL BE AT THE EXPENSE OF THE INSTALLER.

PLUMBING FIXTURE CONNECTION SCHEDULE

MARK	TYPE OF FIXTURE	WASTE	TRAP ARM	VENT	CW	HW	REMARKS
--	W.C. FLUSH VALVE	4"	3"	2"	1"	-	
--	URINAL	2"	1-1/2"	1-1/2"	3/4"	-	
--	LAVATORY	2"	1-1/2"	1-1/2"	1/2"	1/2"	
--	2-COMP. SINK	2"	1-1/2"	1-1/2"	1/2"	1/2"	
--	MOP SINK	3"	3"	2"	1/2"	1/2"	
--	SHOWER	2"	2"	1-1/2"	1/2"	1/2"	
--	FLOOR DRAIN/SINK	2"-4"	2"-4"	1-1/2"	-	-	
--	DRINKING FOUNTAIN	2"	1-1/2"	1-1/2"	1/2"	-	
--	HOSE BIBB H.B.	-	-	-	3/4"	-	

1 - SEE PLUMBING SPECIFICATIONS FOR APPROVED MANUFACTURER, MODEL NUMBER AND FIXTURE TRIM.
2 - DETERMINE EXACT LOCATION AND MOUNTING HEIGHT OF PLUMBING FIXTURES FROM ARCHITECTURAL DRAWINGS.
3 - ALL PUBLIC WATER CLOSETS ARE TO BE ELONGATED BOWL WITH OPEN FRONT SEAT AS PER PLUMBING SPECIFICATIONS
4 - LAVATORY FAUCETS IN PUBLIC RESTROOMS ARE TO BE OF THE METERING/SELF-CLOSING TYPE.
5 - HOT WATER SHALL BE THE LEFT FITTING ON ALL FAUCETS.
6 - PRIOR TO ORDERING FIXTURES AND TRIM, SUBMIT CUT-SHEETS FOR OWNERS APPROVAL.
7 - PROVIDE ALL HOSE BIBBS AND HOSE END FITTINGS WITH VACUUM BREAKER.
8 - PROVIDE TRAP PRIMER ON ALL FLOOR DRAINS AND FLOOR SINKS.
9 - PROVIDE ALL LAVATORY AND SINK FAUCETS WITH WRIST BLADE HANDLES.
10 - ALL HOSE BIBBS ARE TO BE NON-FREEZE TYPE.
11 - ALL HANDICAPPED FIXTURES MUST MEET THE AMERICANS WITH DISABILITIES ACT (A.D.A.) GUIDELINES AND ANSI A117.1 REQUIREMENTS FOR THE PHYSICALLY CHALLENGED.
12 - WATER AND DRAIN PIPES UNDER LAVATORIES SHALL BE INSULATED OR OTHERWISE COVERED. THERE SHALL BE NO SHARP OR ABRASIVE SURFACES UNDER LAVATORIES.
APPROVED MANUFACTURER'S;
a) "PLUMBEREX SPECIALTIES PRODUCTS", HANDI-SHIELD.
b) "TCI PRODUCTS", SKAL+GARD
c) "TRUEBRO", HANDI-LAV-GUARD.
13 - PROVIDE ALL SHOWERS AND/OR TUB/SHOWER COMBO'S WITH A PRESSURE BALANCING OR THERMOSTATIC MIXING VALVE.
14 - MINIMUM WASTE LINE SIZE UNDER SLAB SHALL BE 2".
15 - MINIMUM WATER LINE SIZE UNDER SLAB SHALL BE 3/4".

PLUMBING LEGEND

SYMBOL	ABBREV.	DESCRIPTION
		DRAIN OR WASTE
		VENT PIPING
	CW	COLD WATER
	HW	HOT WATER
	HWR	HOT WATER RETURN
		GATE VALVE
		BALL VALVE
		CHECK VALVE
		GAS COCK
		UNION
	HB	HOSE BIBB
	NFHB	NON-FREEZE HOSE BIBB
G	GAS	GAS PIPING
RO	RO	REVERSE OSMOSIS WATER
CA	CA	COMPRESSED AIR PIPING
RDL	RDL	ROOF DRAIN LEADER
ODL	ODL	OVERFLOW DRAIN LEADER
	FS	FLOOR SINK
	FD	FLOOR DRAIN
	FCO	FLOOR CLEAN-OUT
	SCO	SURFACE CLEAN-OUT
	WCO	WALL CLEAN-OUT
	TP	TRAP PRIMER
	AP	ACCESS PANEL
	RD	ROOF DRAIN
	VTR	VENT THRU ROOF
	CI	CAST IRON
	PVC	POLYVINYL CHLORIDE
	AFF	ABOVE FINISH FLOOR
	AFG	ABOVE FINISH GRADE

NOTE: NOT ALL SYMBOLS MAY APPLY.

Registered Professional Engineer (Mechanical) CERTIFICATE NO. 8007 RAY A. SCHWIMMER Date Signed ARIZONA, U.S.A.

U.S. DEPARTMENT OF AGRICULTURE
FOREST SERVICE
R-3
SOUTHWESTERN REGION

Schwimmer ENGINEERS, Inc.
5055 W. Ray Road, Suite 20, Chandler, Arizona 85226
Phone: (480)968-6440; Email: Engr@SchwimmerAZ.com
SEI JOB #06016

DESIGN/DRAWN: RON ROSS
CHECKED: RAY SCHWIMMER
FACILITY REVIEW:
UNION REVIEW:
ACCESSIBILITY REVIEW:

Forest: COCONINO NATIONAL FOREST
Project Name: RED ROCK RANGER STATION
HWY 179, VILLAGE OF OAK CREEK, AZ

Sheet Title: PLUMBING FIXTURE SCHEDULE AND WATER CALCULATIONS
Scale: AS SHOWN
Sheet: P4.2

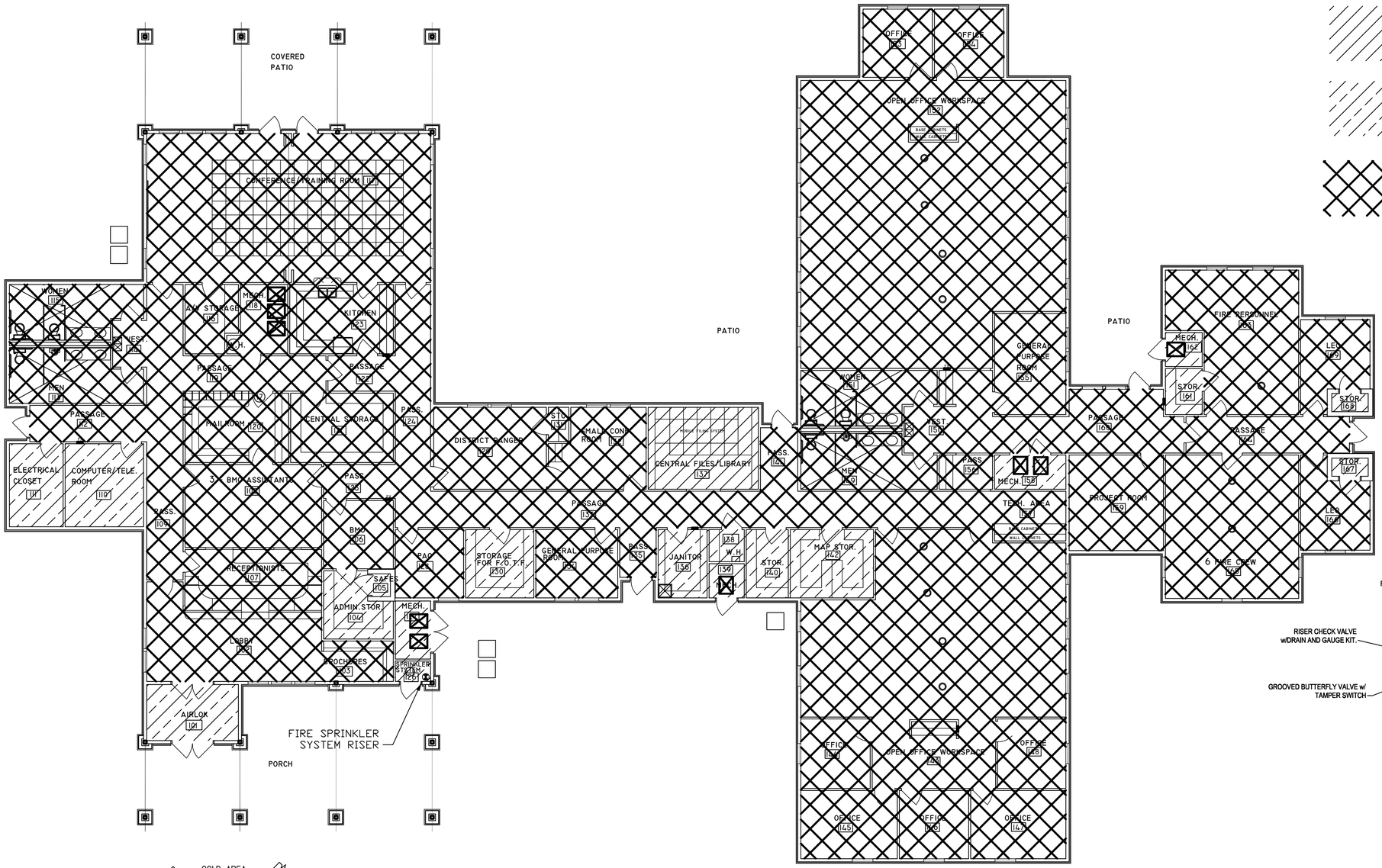

ORD HAZ GRP II
0.20 GPM / SQ FT OVER 1500 SQ FT
130 SQ FT PER HEAD
250 GPM HOSE

ORD HAZ GRP I
0.15 GPM / SQ FT OVER 1500 SQ FT
130 SQ FT PER HEAD
250 GPM HOSE

LIGHT HAZ
0.10 GPM / SQ FT OVER 1500 SQ FT
225 SQ FT PER HEAD
100 GPM HOSE

NOTE: ALL COMBUSTIBLE CONCEALED SPACES SHALL BE PROTECTED IN ACCORDANCE WITH NFPA 13, 2000 AS LIGHT HAZ
0.10 GPM / SQ FT OVER 1500 SQ FT
225 SQ FT PER HEAD
100 GPM HOSE

DESIGN AREAS SHALL BE INCREASED 30% FOR DRY SYSTEMS. DESIGN AREAS SHALL BE INCREASED 30% FOR CEILING / ROOF SLOPES EXCEEDING 2:12.

THE MAXIMUM AREA PER SPRINKLER SHALL BE 130 SQ FT IN AREAS WHERE THE STRUCTURE IS SPACED LESS THAN 36" ON CENTER.

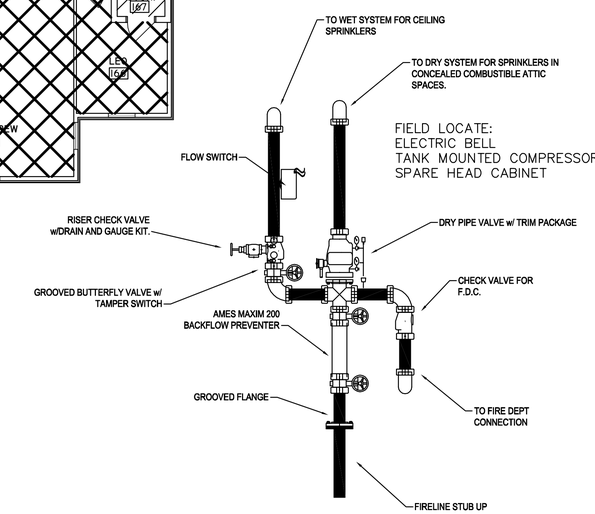

RISER ASSEMBLY

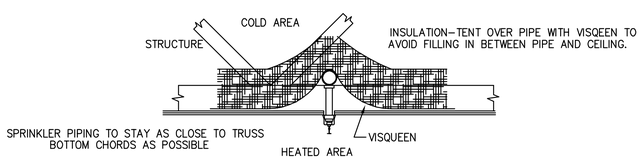

TENT INSULATION DETAIL
SCALE: NTS

FIRE PROTECTIOB FLOOR PLAN
SCALE: 1/8"=1'-0"

U.S. DEPARTMENT OF AGRICULTURE
FOREST SERVICE
R-3
SOUTHWESTERN REGION

Schwimmer ENGINEERS, Inc.
5055 W. Ray Road, Suite 20, Chandler, Arizona 85226
Phone: (480)968-6440; Email: Engr@SchwimmerAZ.com
SEI JOB #06016

DESIGN/DRAWN:	RON ROSS
CHECKED:	RAY SCHWIMMER
FACILITY REVIEW:	
UNION REVIEW:	
ACCESSIBILITY REVIEW:	

Forest: COCONINO NATIONAL FOREST
Project Name: RED ROCK RANGER STATION
HWY 179, VILLAGE OF OAK CREEK, AZ

Sheet Title: FIRE PROTECTION FLOOR PLAN - OFFICE BUILDING
Scale: AS SHOWN
Sheet: FP2.1

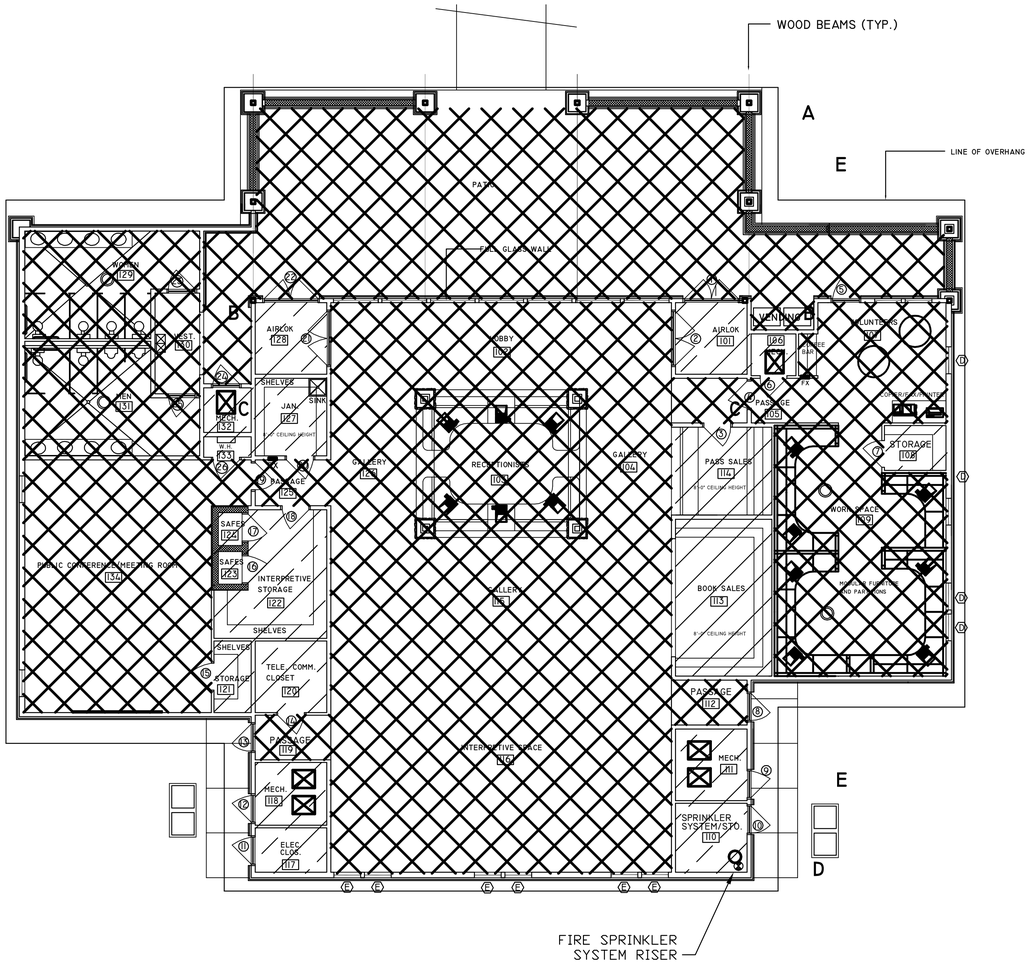

FIRE PROTECTIOB FLOOR PLAN

SCALE: 1/8"=1'-0"

N E S W

ORD HAZ GRP II
0.20 GPM / SQ FT OVER 1500 SQ FT
130 SQ FT PER HEAD
250 GPM HOSE

ORD HAZ GRP I
0.15 GPM / SQ FT OVER 1500 SQ FT
130 SQ FT PER HEAD
250 GPM HOSE

LIGHT HAZ
0.10 GPM / SQ FT OVER 1500 SQ FT
225 SQ FT PER HEAD
100 GPM HOSE

NOTE: ALL COMBUSTIBLE CONCEALED SPACES SHALL BE PROTECTED IN ACCORDANCE WITH NFPA 13, 2000 AS LIGHT HAZ
0.10 GPM / SQ FT OVER 1500 SQ FT
225 SQ FT PER HEAD
100 GPM HOSE

DESIGN AREAS SHALL BE INCREASED 30% FOR DRY SYSTEMS. DESIGN AREAS SHALL BE INCREASED 30% FOR CEILING / ROOF SLOPES EXCEEDING 2:12.

THE MAXIMUM AREA PER SPRINKLER SHALL BE 130 SQ FT IN AREAS WHERE THE STRUCTURE IS SPACED LESS THAN 36" ON CENTER.

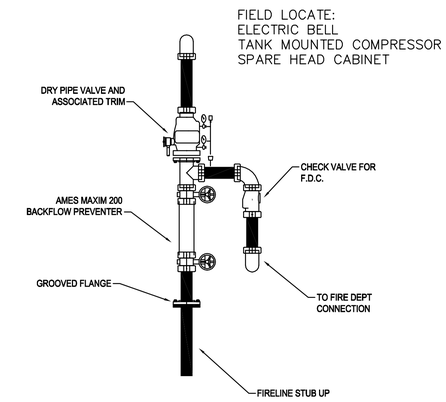

RISER ASSEMBLY

Registered Professional Engineer (Fire Protection)
CERTIFICATE NO. 8007
RAY A. SCHWIMMER
Date Signed
ARIZONA, U.S.A.

U.S. DEPARTMENT OF AGRICULTURE
FOREST SERVICE
R-3
SOUTHWESTERN REGION

Schwimmer ENGINEERS, Inc.
5055 W. Ray Road, Suite 20, Chandler, Arizona 85226
Phone: (480)968-6440; Email: Engr@SchwimmerAZ.com
SEI JOB #06016

DESIGN/DRAWN:	RON ROSS
CHECKED:	RAY SCHWIMMER
FACILITY REVIEW:	
UNION REVIEW:	
ACCESSIBILITY REVIEW:	

Forest: COCONINO NATIONAL FOREST

Project Name: RED ROCK RANGER STATION
HWY 179, VILLAGE OF OAK CREEK, AZ

Sheet Title: FIRE PROTECTION FLOOR PLAN - VISITOR CONTACT BUILDING

Scale: AS SHOWN

Sheet: FP3.1

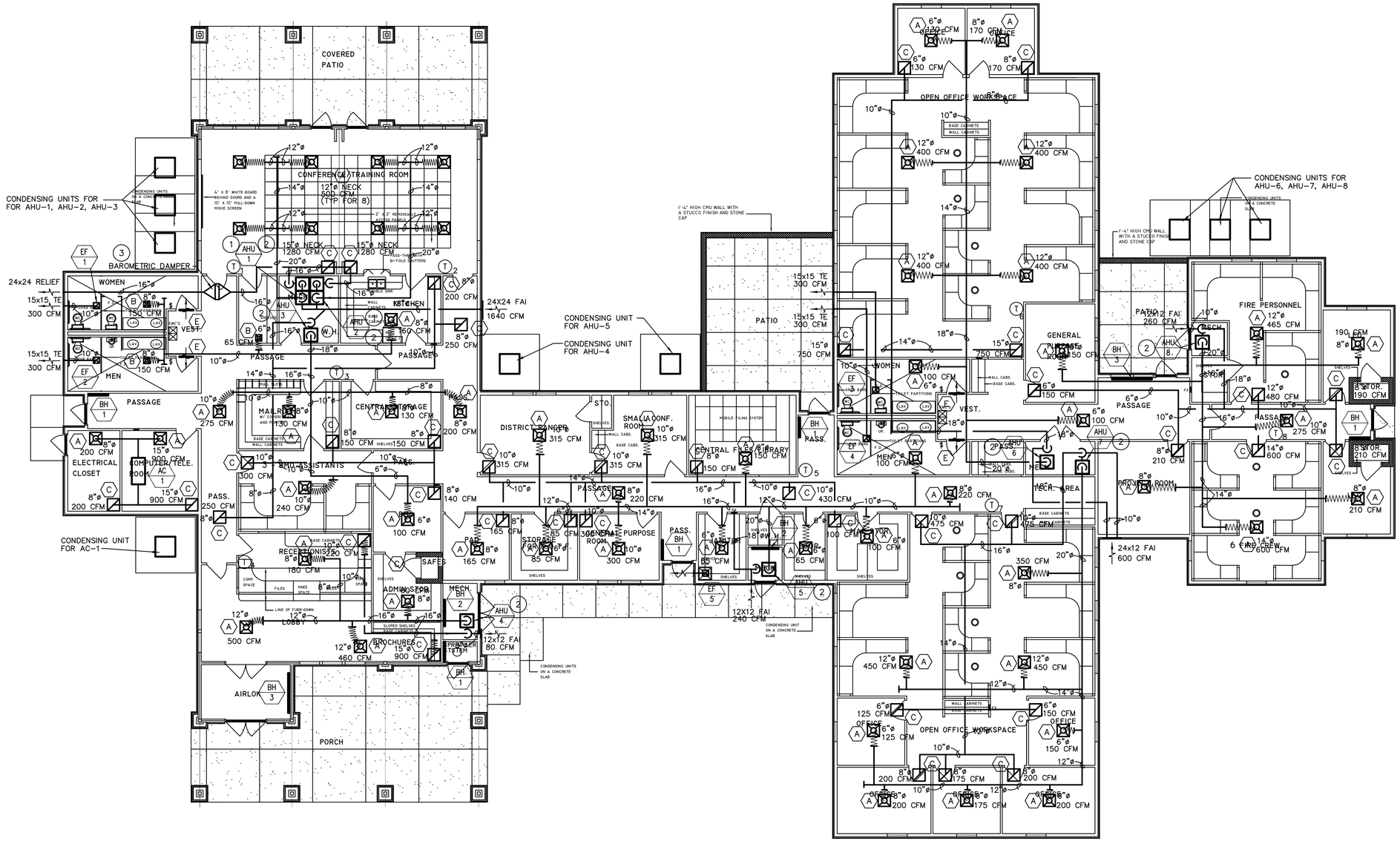

KEYED MECHANICAL NOTES

1. UNIT TO BE PROVIDED WITH A LENNOX EMD14M-65 ECONOMIZER SECTION.
2. SEE SHEET M2.3 FOR LARGE SCALE EQUIPMENT ROOM LAYOUTS.
3. PROVIDE A RUSKIN CBD4 COUNTERBALANCED BACKDRAFT DAMPER TO RELIEVE EXCESS AIR IN THE CONFERENCE/TRAINING ROOM.

GENERAL NOTES:

1. SEE ARCHITECTURAL REFLECTED CEILING PLAN FOR EXACT AIR SUPPLY AND RETURN OUTLET LOCATIONS.
2. MECHANICAL CONTRACTOR TO COORDINATE WITH PLUMBING CONTRACTOR ON INSTALLATION OF PROPANE GAS PIPING AND CONDENSATE DRAIN PIPING. SEE PLUMBING DRAWINGS.
3. ALL REFRIGERANT PIPING TO BE ABOVE GROUND. PROVIDE UNISTRUT PIPE SUPPORTS MOUNTED TO 4" CONCRETE CURB.

OFFICE BLDG. MECH. FLOOR PLAN

SCALE: 1/8"=1'-0"

Registered Professional Engineer (Mechanical) CERTIFICATE NO. 8007 RAY A. SCHWIMMER Date Signed ARIZONA, U.S.A.

U.S. DEPARTMENT OF AGRICULTURE
FOREST SERVICE
R-3
SOUTHWESTERN REGION

Schwimmer ENGINEERS, Inc.
5055 W. Ray Road, Suite 20, Chandler, Arizona 85226
Phone: (480)968-6440; Email: Engr@SchwimmerAZ.com
SEI JOB #06016

DESIGN/DRAWN:	RON ROSS
CHECKED:	RAY SCHWIMMER
FACILITY REVIEW:	
UNION REVIEW:	
ACCESSIBILITY REVIEW:	

Forest: COCONINO NATIONAL FOREST

Project Name: RED ROCK RANGER STATION
HWY 179, VILLAGE OF OAK CREEK, AZ

Sheet Title: MECHANICAL FLOOR PLAN - OFFICE

Scale: AS SHOWN

Sheet: M2.1

MECHANICAL LEGEND

SYMBOL	DESCRIPTION
	NEW SUPPLY AIR DIFFUSER
	EXISTING SUPPLY AIR DIFFUSER
	REMOVED SUPPLY AIR DIFFUSER
	NEW RETURN AIR GRILLE
	EXISTING RETURN AIR GRILLE
	REMOVED RETURN AIR GRILLE
	NEW EXHAUST GRILLE
	EXISTING EXHAUST GRILLE
	REMOVED EXHAUST GRILLE
	FIRE DAMPER
	SUPPLY AIR DUCT UP OR DOWN
	RETURN AIR DUCT UP OR DOWN
T	THERMOSTAT
SD	SMOKE DETECTOR
A 10ø 300	DIFFUSER DESIGNATION NECK SIZE BALANCING CFM
	POINT OF CONNECTION
FC 1	EQUIPMENT DESIGNATION TYPE NUMBER ON SCHEDULE
1 M3	DETAIL DESIGNATION NUMBER SHEET FOUND ON
1	DELTA – DRAWING REVISION
1	KEYED NOTE

SYMBOL	DESCRIPTION
	DOUBLE LINE DUCTWORK
	NEW DUCTWORK
	EXISTING DUCTWORK
	REMOVED DUCTWORK
	NEW FLEX DUCT
	EXISTING FLEX DUCT
	REMOVED FLEX DUCT
	TURNING VANE
	SPIN-IN W/AIR SCOOP AND MANUAL VOLUME DAMPER
	SINGLE LINE DUCTWORK
	NEW DUCTWORK
	EXISTING DUCTWORK
	REMOVED DUCTWORK
	NEW FLEX DUCT
	EXISTING FLEX DUCT
	REMOVED FLEX DUCT
	SPIN-IN W/AIR SCOOP AND MANUAL VOLUME DAMPER

HEATING, VENTILATION, AIR CONDITIONING UNIT SCHEDULE

MARK	MANUFACTURER & OPER. MODEL #	FAN			COOLING (MBH)		PRIMARY HEAT (MBH)			FILTER SIZE	ELECTRICAL DATA						OSA "Q" CFM	REMARKS
											FAN UNIT			CONDENSING UNIT				
		C.F.M.	E.S.P.	H.P.	TOTAL	SENSIBLE	INPUT	OUTPUT	FUEL		VOLT.	PHASE	HP	VOLT.	PHASE	FLA		
AHU 1	G51MP-60C-090 FURNACE SECTION W/C33-62C CASED COIL & TSA060S2N41Y CONDENSING UNIT	2100	.60	1	53.8	53.8	88	82	PROPANE	2"	120	1	1	208	3	20.8	820	1 2 3 4 5 6 7 12 13
AHU 2	G51MP-60C-090 FURNACE SECTION W/C33-62C CASED COIL & TSA060S2N41Y CONDENSING UNIT	2100	.60	1	53.8	53.8	88	82	PROPANE	2"	120	1	1	208	3	20.8	820	1 2 3 4 5 6 7 12 13
AHU 3	G51MP-48C-090 FURNACE SECTION W/C33-62C CASED COIL & TSA048S2N41Y CONDENSING UNIT	1600	.60	.50	37.6	37.6	88	82	PROPANE	2"	120	1	.50	208	3	13.1	120	1 2 3 4 5 6 7 12
AHU 4	G51MP-36B-070 FURNACE SECTION W/C33-43B CASED COIL & TSA036S2N41Y CONDENSING UNIT	1200	.60	.33	28.3	26.2	66	62	PROPANE	2"	120	1	.33	208	1	16.8	80	1 2 3 4 5 6 7 12
AHU 5	G51MP-60C-090 FURNACE SECTION W/C33-62C CASED COIL & TSA060S2N41Y CONDENSING UNIT	2100	.60	1	52.1	51.8	88	82	PROPANE	2"	120	1	1	208	3	20.8	240	1 2 3 4 5 6 7 12
AHU 6	G51MP-60C-090 FURNACE SECTION W/C33-62C CASED COIL & TSA060S2N41Y CONDENSING UNIT	2100	.60	1	52.1	51.8	88	82	PROPANE	2"	120	1	1	208	3	20.8	300	1 2 3 4 5 6 7 12
AHU 7	G51MP-60C-090 FURNACE SECTION W/C33-62C CASED COIL & TSA060S2N41Y CONDENSING UNIT	2100	.60	1	52.1	51.8	88	82	PROPANE	2"	120	1	1	208	3	20.8	300	1 2 3 4 5 6 7 12
AHU 8	G51MP-60C-090 FURNACE SECTION W/C33-62C CASED COIL & TSA060S2N41Y CONDENSING UNIT	2100	.60	1	52.1	51.8	88	82	PROPANE	2"	120	1	1	208	3	20.8	260	1 2 3 4 5 6 7 12
AC 1	CBX32M-042 FAN/COIL SECTION WITH A 13ACD-030P CONDENSING UNIT	1100	.60	.33	31.4	21.0	–	–	–	2"	120	1	.33	208	1	14.0	–	1 4 5

EXHAUST FAN SCHEDULE

MARK	SERVING	MANUFACTURER & MODEL #	C.F.M.	EXT. S.P.	ELECTRICAL DATA		OPER. WT. LBS.	REMARKS
					WATTS	V/PH/FLA		
EF 1	WOMEN'S TOILET ROOM	PENN ZEPHYR Z8H	300	0.375	130	120/1/–	20	8 9 10
EF 2	MEN'S TOILET ROOM	PENN ZEPHYR Z8H	300	0.375	130	120/1/–	20	8 9 10
EF 3	WOMEN'S TOILET ROOM	PENN ZEPHYR Z8H	300	0.375	130	120/1/–	20	8 9 10
EF 4	MEN'S TOILET ROOM	PENN ZEPHYR Z8H	300	0.375	130	120/1/–	20	8 9 10
EF 5	JANITOR'S CLOSET	PENN ZEPHYR Z5H	100	0.25	79	120/1/–	15	8 9 10

SEQUENCE OF CONTROL FOR FCU'S WITH OUTSIDE AIR ECONOMIZER

ECONOMIZER DAMPERS AND CONTROLS:
ECONOMIZER SECTION USES LOW LEAKAGE DAMPERS ON RETURN AND OUTSIDE AIR CONNECTIONS TO MODULATE OUTSIDE AIR FOR BOTH FREE COOLING, AND TO SATISFY INDOOR AIR QUALITY. THE POSITIONING OF THE OUTDOOR AIR AND RETURN AIR DAMPERS IS ACCOMPLISHED BY A 24 VOLT DAMPER MOTOR WITH ADJUSTABLE MINIMUM POSITION SWITCH, WHICH ARE CONTROLLED BY THE 2 STAGE ROOM THERMOSTAT, ELECTRONIC DISCHARGE AIR SENSOR AND SOLID-STATE ADJUSTABLE OUTDOOR AIR ENTHALPY CONTROL. THE ENTHALPY CONTROL ALLOWS FOR 0-100% OUTDOOR AIR TO BE USED FOR 'FREE COOLING' WHEN OUTDOOR HUMIDITY AND TEMPERATURE ARE ACCEPTABLE. INDOOR AIR QUALITY CONTROL OF THE ECONOMIZER WILL BE ACCOMPLISHED BY A FIELD INSTALLED CO2 SENSOR LOCATED IN THE RETURN AIR DUCT. THE CO2 SENSOR WILL MONITOR THE CO2 LEVEL IN THE RETURN AIRSTREAM, AND IF CO2 LEVEL EXCEEDS SET POINT (800 PPM)THE ECONOMIZER WILL OPEN TO BRING IN OUTSIDE AIR UNTIL ACCEPTABLE LEVELS (600 PPM) ARE REACHED.

KEYED MECHANICAL EQUIPMENT NOTES

1. ALL UNITS ARE LENNOX MODEL NUMBERS. COOLING CAPACITIES INCLUDE EVAPORATOR FAN HEAT.
2. HEATING: OAT @ 20 DEG. F, ENTERING AIR @ 70 DB.
3. PROVIDE WITH LENNOX ELITE SERIES 49M55 MULTI-PROGRAMMABLE, AUTO CHANGEOVER, THERMOSTAT. PROVIDE WITH LENNOX FIELD INSTALLED TXV/EXP VALVE KIT .
4. HVAC FILTERS: 2" PLEATED CAM-FARR 30/30 TYPE, 30% DOP EFF., FIBERGLASS W/C70 FASTENERS MOUNTED IN A SIDE ACCESS CAM-FARR TYPE 8 HOLDING FRAME.
5. EXTERNAL STATIC PRESSURE SHALL ONLY INCLUDE DUCT AND DUCT MOUNTED COMPONENTS SHOWN ON DRAWINGS. VENDOR SHALL CALCULATE INTERNAL STATIC PRESSURES FOR UNIT MOUNTED ACCESSORIES SUCH AS FILTERS, DAMPERS, COILS, PLENUMS, ETC. NO EQUIPMENT WITH LESS THAN 98% OF LISTED CAPACITY SHALL BE APPROVED.
6. FAN/FURNACE SECTION TO BE 120 VOLT, SINGLE PHASE. CONDENSING UNIT TO BE 208 VOLT, PHASE AS SHOWN. FURNACE SECTION TO BE PROVIDED WITH LP GAS ORIFICES SUITABLE FOR OPERATION AT 4500 FEET ELEVATION.
7. PROVIDE 3" CONCENTRIC WALL/ROOF TERMINATION KIT FOR COMBUSTION AIR INTAKE PIPE AND FLUE EXHAUST PIPE.
8. TIME CLOCK.
9. PROVIDE WITH MODEL WC10 WALL CAP W/BIRDSREEN.
10. PROVIDE KEYED ON/OFF SWITCH.
11. WITH INTEGRAL TA2AW THERMOSTAT.
12. PROVIDE HVAC UNIT WITH AUTOMATIC SHUT-OFF, ACCOMPLISHED BY INTERRUPTING THE POWER SOURCE OF THE EQUIPMENT UPON DETECTION OF SMOKE IN THE MAIN RETURN AIR DUCT SERVED BY THE HVAC EQUIPMENT. SMOKE DETECTORS SHALL BE LABELED BY AN APPROVED AGENCY FOR AIR DUCT INSTALLATION AND SHALL BE INSTALLED IN ACCORDANCE WITH THE MANUFACTURER'S INSTALLATION INSTRUCTIONS. SUCH DEVICES SHALL BE COMPATIBLE WITH THE OPERATING VELOCITIES, PRESSURES, TEMPERATURES AND HUMIDITIES OF THE SYSTEM. WHERE FIRE DETECTION OR ALARM SYSTEMS ARE PROVIDED FOR IN THE BUILDING, THE SMOKE DETECTORS REQUIRED BY IMC SECTION 606 SHALL BE SUPERVISED BY SUCH SYSTEMS. AN INDEPENDENT SPECIAL INSPECTION BY A CERTIFIED NEBB OR AABC AIR BALANCE CONTRACTOR IS REQUIRED FOR THE INSTALLATION AND TESTING OF THE HVAC AUTOMATIC SHUT-OFFS. THE SPECIAL INSPECTION REPORT SHALL BE SIGNED AND SEALED BY THE MECHANICAL ENGINEER FOR THE PROJECT AND RECEIVED AND APPROVED BY THE CITY MECHANICAL INSPECTOR PRIOR TO CITY ISSUANCE OF FINAL INSPECTION APPROVAL OR OCCUPANCY APPROVAL, INCLUDING CONDITIONAL OCCUPANCY APPROVAL. ALL UNITS SERVING THE SAME AREA OF THE BUILDING SHALL BE INTERLOCKED TO SHUT DOWN TOGETHER. SMOKE DETECTORS TO BE PROVIDED BY THE ELECTRICAL CONTRACTOR FOR INSTALLATION BY THE MECHANICAL CONTRACTOR.
13. PROVIDE ECONOMIZER SECTION COMPLETE WITH MOTORIZED DAMPERS, INTEGRATED CONTROLS TO MODULATE OSA BASED ON TEMPERATURE AND/OR CO2 LEVELS INSIDE OCCUPIED SPACE. CO2 SENSOR SHALL BE MOUNTED IN RETURN AIR DUCTWORK. PROVIDE ALL NECESSARY RELAYS, ETC. TO PROVIDE ACOMPLETELY AUTOMATED SENSIBLE ECONOMIZER.

BASEBOARD ELECTRIC HEATER SCHEDULE

MARK	DESCRIPTION	MANUFACTURER & MODEL #	LENGTH	WATTS	VOLT/PH.	REMARKS
BH 1	SEE FLOOR PLANS FOR HEATER LOCATIONS	QMARK QMKC2513W	3'-0"	750	120/1	11
BH 2	SEE FLOOR PLANS FOR HEATER LOCATIONS	QMARK QMKC2514W	4'-0"	1000	120/1	11
BH 3	SEE FLOOR PLANS FOR HEATER LOCATIONS	QMARK QMKC2516W	6'-0"	1500	120/1	11

DIFFUSERS, GRILLES, REGISTERS, & LOUVERS

MARK	DESCRIPTION	MANUFACTURER & MODEL #	MATERIAL	FACE SIZE	FRAME TYPE	OBD	NECK ø	REMARKS
A	CEILING SUPPLY DIFFUSER	KRUEGER SERIES 1400	STEEL	24x24	23	YES	AS SHOWN	–
B	CEILING SUPPLY DIFFUSER	KRUEGER SERIES 1400	STEEL	12x12	22	YES	AS SHOWN	–
C	CEILING RETURN REGISTER	KRUEGER SERIES 6590	STEEL	24x24	23	YES	AS SHOWN	–
D	CEILING RETURN REGISTER	KRUEGER SERIES 6590	STEEL	12x12	22	YES	AS SHOWN	–
E	DOOR GRILLE	KRUEGER SERIES 600	STEEL	24x24	23	NO	–	–

Registered Professional Engineer (Mechanical)
CERTIFICATE NO. 8007
RAY A. SCHWIMMER
Date Signed
ARIZONA, U.S.A.

U.S. DEPARTMENT OF AGRICULTURE
FOREST SERVICE
R-3
SOUTHWESTERN REGION

Schwimmer ENGINEERS, Inc.
5055 W. Ray Road, Suite 20, Chandler, Arizona 85226
Phone: (480)968-6440; Email: Engr@SchwimmerAZ.com
SEI JOB #06016

DESIGN/DRAWN: RON ROSS
CHECKED: RAY SCHWIMMER
FACILITY REVIEW:
UNION REVIEW:
ACCESSIBILITY REVIEW:

Forest: COCONINO NATIONAL FOREST
Project Name: RED ROCK RANGER STATION
HWY 179, VILLAGE OF OAK CREEK, AZ

Sheet Title: OFFICE BUILDING - SCHEDULES DETAILS AND DIAGRAMS
Scale: AS SHOWN
Sheet: M2.2

GENERAL NOTES

SOME NOTES MAY NOT APPLY

1. CONDUIT LAYOUTS ON THE PLANS ARE DIAGRAMMATIC, NOT INDICATING THE ROUTING REQUIRED. THE CONTRACTOR SHALL ROUTE CONDUITS AS REQUIRED BY THE CONDITIONS OF INSTALLATION.
2. ALL EQUIPMENT PROVIDED BY THE ELECTRICAL CONTRACTOR SHALL BE LISTED AND LABELED BY A NATIONALLY-RECOGNIZED TESTING AGENCY, ACCEPTABLE TO THE AUTHORITY HAVING JURISDICTION, FOR THE CONDITIONS OF INSTALLATION.
3. DEVICE LOCATIONS SHOWN ON THE DRAWINGS ARE APPROXIMATE. EXACT DEVICE LOCATIONS SHALL BE AS INDICATED ON THE ARCHITECTURAL PLANS OR DIMENSIONED. IF NOT SHOWN ON THE ARCHITECTURAL PLANS OR DIMENSIONED ON THE ELECTRICAL PLANS, VERIFY THE EXACT LOCATION WITH THE ARCHITECT PRIOR TO ROUGH-IN.
4. PLANS INDICATE THE NUMBER OF PHASE, NEUTRAL, AND GROUND CONDUCTORS, WHERE MORE THAN THREE CONDUCTORS ARE TO BE INSTALLED IN A CONDUIT (THREE OR LESS CONDUCTORS ARE NOT SHOWN). ADDITIONAL CONDUCTORS REQUIRED FOR CONTROL SHALL BE INCLUDED EVEN IF NOT EXPLICITLY SHOWN.
5. WHERE SIZE IS NOT SHOWN ON THE DRAWINGS, CIRCUITS SHALL CONSIST OF #12 AWG PHASE AND GROUNDED (NEUTRAL) CONDUCTORS AND A #12 AWG GROUND CONDUCTOR IN 3/4" CONDUIT.
6. UNLESS SPECIFICALLY NOTED OTHERWISE, THE ELECTRICAL CONTRACTOR SHALL MAKE FINAL CONNECTIONS TO ALL UTILIZATION EQUIPMENT SHOWN ON THE DRAWINGS. VERIFY THE TYPE OF FINAL CONNECTION AND PROVIDE APPROPRIATE WIRING METHOD.
7. THE ELECTRICAL CONTRACTOR SHALL COORDINATE WITH ALL OTHER TRADES PRIOR TO ORDERING OR INSTALLING ANY EQUIPMENT, TO VERIFY ELECTRICAL REQUIREMENTS OF EQUIPMENT PROVIDED BY OTHER TRADES ARE PROVIDED FOR IN THE ELECTRICAL DESIGN. THE CONTRACTOR WILL NOT BE COMPENSATED FOR COSTS ASSOCIATED WITH CHANGING THE ELECTRICAL SYSTEMS TO MATCH UTILIZATION EQUIPMENT, EVEN IF THE ELECTRICAL WORK IS INSTALLED PER THE DRAWINGS.
8. THE ELECTRICAL CONTRACTOR SHALL REVIEW THE MECHANICAL DRAWINGS, PRIOR TO BID, TO DETERMINE THE LOCATION OF SMOKE OR FIRE/SMOKE DAMPERS, IF ANY. UNLESS OTHERWISE NOTED ON THE ELECTRICAL PLANS, EACH SMOKE OR FIRE/SMOKE DAMPER SHALL BE CONNECTED TO THE NEAREST RECEPTACLE CIRCUIT, NOT TO EXCEED THREE DAMPERS ADDED TO ANY CIRCUIT. INCLUDE IN THE BASE BID, ONE DUCT SMOKE DETECTOR PER SMOKE OR FIRE/SMOKE DAMPER SHOWN ON THE PLANS. UNLESS NOTED OTHERWISE, EACH DAMPER DUCT SMOKE DETECTOR SHALL BE RATED 120VAC AND SHALL BE CONNECTED TO THE FIRE ALARM PANEL (IF ANY) FOR SUPERVISION.
9. SMOKE OR FIRE/SMOKE DAMPERS SHALL BE CONNECTED TO THE FIRE ALARM SYSTEM (IF ANY) AND SHALL BE CONTROLLED BY THE FIRE ALARM CONTROL PANEL (IF ANY).
11. SOME CONDUCTOR SIZES ARE BASED ON THE USE OF 75 DEGREE C CONDUCTOR RATINGS. THE CONTRACTOR SHALL VERIFY, PRIOR TO INSTALLATION OF CONDUCTORS OR CONDUIT FEEDING ANY EQUIPMENT, THAT ALL ELECTRICAL EQUIPMENT IS RATED FOR USE WITH 75 DEGREE C WIRING. IF ANY EQUIPMENT IS RATED FOR USE WITH LESS THAN 75 DEGREE C CONDUCTORS, THE CONTRACTOR SHALL NOTIFY THE ENGINEER IMMEDIATELY FOR EVALUATION/CORRECTION.
12. UNLESS SPECIFICALLY NOTED OTHERWISE, SYSTEMS PROVIDED OR INSTALLED BY THE ELECTRICAL CONTRACTOR SHALL BE COMPLETE AND FULLY-FUNCTIONING AFTER INSTALLATION. COMPONENTS NOT SHOWN, BUT REQUIRED FOR THE PROPER OPERATION OF THE EQUIPMENT OR SYSTEM, SHALL BE PROVIDED AT NO ADDITIONAL COST TO THE PROJECT.
13. THE CONTRACTOR SHALL PERFORM ALL ACCEPTANCE TESTS REQUIRED OR RECOMMENDED BY EQUIPMENT MANUFACTURERS. THE CONTRACTOR SHALL NOTIFY THE ENGINEER SEVEN (7) DAYS PRIOR TO TESTING AND SHALL ALLOW OBSERVATION OF THE TESTING BY THE ENGINEER.
14. ALL RECEPTACLES INSTALLED WITHIN 6 FEET OF A SINK SHALL BE GFI PROTECTED.
15. UNLESS OTHERWISE NOTED, ALL EQUIPMENT DISCONNECTS SHALL BE NEMA TYPE 3R, FUSIBLE, 30A, 3 POLE. FUSE PER EQUIPMENT MANUFACTURER'S INSTALLATION INSTRUCTIONS.
16. DEVICE BOXES SHOWN BACK-TO-BACK SHALL BE OFFSET A MINIMUM OF TWELVE (12) INCHES TO REDUCE SOUND TRANSMISSION BETWEEN ROOMS.
17. PENETRATIONS IN WALLS SHALL BE SEALED WITH FLEXIBLE ACOUSTIC CAULKING. CAULKING SHALL BE APPLIED AROUND OUTLET BOXES TO PROVIDE A COMPLETE SEAL BETWEEN THE BOX AND THE WALL.
18. LIGHT FIXTURES IN SUSPENDED CEILINGS SHALL BE INSTALLED IN COMPLIANCE WITH UBC 25-213 (1997). REQUIREMENTS INCLUDE, BUT ARE NOT LIMITED TO, THE FOLLOWING:

    a. LIGHT FIXTURES SHALL BE POSITIVELY ATTACHED TO THE SUSPENDED CEILING SYSTEM.

    b. INSTALL (OR VERIFY THE EXISTANCE OF) A #12 AWG HANGER WIRE WITHIN 3" OF EACH CORNER OF THE LIGHT FIXTURE.

    c. INSTALL TWO #12 AWG WIRES FROM EACH FIXTURE TO THE STRUCTURE ABOVE, CONNECTED TO OPPOSITE CORNERS OF THE FIXTURE. FOR FIXTURES WEIGHING LESS THAN 56 POUNDS, THESE WIRES MAY BE SLACK. FOR FIXTURES WEIGHING 56 POUNDS OR MORE, THESE WIRES SHALL BE TIGHTENED TO CARRY THE FULL WEIGHT OF THE FIXTURE.

    d. PENDANT-HUNG FIXTURES SHALL BE SUPPORTED FROM THE STRUCTURE ABOVE WITH A #9 AWG WIRE OR OTHER APPROVED SUPPORT METHOD WHICH DOES NOT DEPEND ON THE CEILING SUPPORT SYSTEM.
19. LIGHT FIXTURES MOUNTED IN CEILINGS WHICH FORM AN AIR-HANDLING SPACE (PLENUM) SHALL BE SPECIFICALLY LISTED FOR SUCH INSTALLATION.
20. LIGHT FIXTURES MOUNTED IN FIRE-RATED CEILINGS SHALL BE SPECIFICALLY LISTED TO MAINTAIN THE FIRE RATING.
21. WHERE THE PLANS INDICATE A LIGHT FIXTURE IS TO BE PROVIDED WITH SPECIAL FEATURES/ SWITCHING (DIMMING, EMERGENCY, THREE-LEVEL, ETC) THE CONTRACTOR SHALL PROVIDE THESE FIXTURES WITH THE APPROPRIATE BALLASTING TO ACCOMODATE THE SPECIAL FEATURE. THE CONTRACTOR SHALL PROVIDE THE FIXTURES AS INDICATED IN THE LIGHTING FIXTURE SCHEDULE, WITH MODIFICATIONS AS RQUIRED BY PLAN NOTES.
22. WHERE A MANUAL MOTOR STARTER IS SHOWN ON THE PLANS, THE CONTRACTOR SHALL VERIFY THE DEVICE PROVIDED IS LABELED "SUITABLE AS MOTOR DISCONNECT".
23. WHERE A COMBINATION CONTROLLER IS SHOWN ON THE DRAWINGS, THE CONTRACTOR SHALL VERIFY THE DEVICE PROVIDED IS LABELED "SUITABLE AS MOTOR DISCONNECT" AND IS LISTED AS A BRANCH CIRCUIT OVERLOAD AND SHORT-CIRCUIT PROTECTIVE DEVICE.
26. PRIOR TO TRENCHING IN ANY AREA, THE CONTRACTOR SHALL CONTACT ELECTRICAL, COMMUNICATIONS/ DATA, CABLE TV, GAS, AND WATER UTILITY PROVIDERS (BLUE STAKE) AND HAVE ALL UTILITIES IN THE AREA IDENTIFIED. IN ADDITION, THE CONTRACTOR SHALL OBTAIN THE SERVICES OF A SUBCONTRACTOR SPECIALIZING IN THE LOCATION OF UNDERGROUND STRUCTURES TO IDENTIFY ANY OBSTACLES IN THE PATH OF TRENCHING (PRIOR TO COMMENCING WORK). DAMAGE TO UNDERGROUND STRUCTURES SHALL BE REPAIRED BY THE CONTRACTOR AT NO ADDITIONAL COST TO THE PROJECT.
27. DEMOLITION NOTES:
    a. FOR EQUIPMENT BEING REMOVED AND REPLACED, THE CONTRACTOR SHALL DE-ENERGIZE IT AND MAKE IT SAFE PRIOR TO REMOVAL. COMPLY WITH OSHA REQUIREMENTS FOR LOCKING-OUT AND TAGGING EQUIPMENT TO PREVENT INADVERTENT ENERGIZING.
    b. WHERE EQUIPMENT IS BEING REMOVED, BUT NOT REPLACED, REMOVE THE CONDUCTORS FEEDING IT BACK TO THE POINT WHERE THEY RECEIVE POWER (CIRCUIT BREAKER OR BRANCH CIRCUIT CONNECTOR. REMOVE ACCESSIBLE CONDUITS. ABANDON IN-PLACE INACCESSIBLE CONDUITS. AFTER REMOVAL OF EQUIPMENT, REPAIR ANY OPENING LEFT TO MATCH SURROUNDING SURFACES.
    c. COORDINATE WITH THE OTHER TRADES, PRIOR TO BID, AND INCLUDE IN THE BASE BID THE ELECTRICAL DISCONNECTION OF ANY EQUIPMENT BEING DEMOLISHED, EVEN IF NOT EXPLICITLY IDENTIFIED IN THE ELECTRICAL DRAWINGS.
    d. UNLESS NOTED OTHERWISE, REMOVE ALL DEMOLISHED EQUIPMENT FROM THE PROPERTY AND DISPOSE OF IT PROPERLY (IN ACCORDANCE WITH LOCAL, STATE, AND FEDERAL ENVIRONMENTAL REGULATIONS). FEES ASSOCIATED WITH DISPOSAL SHALL BE INCLUDED IN THE CONTRACTOR'S BASE BID.
28. UTILITY COORDINATION:
    a. THE CONTRACTOR SHALL SUBMIT A COMPLETE SET OF DRAWINGS TO ELECTRICAL AND TELCO UTILITIES WITHIN ONE WEEK OF NOTICE TO PROCEED.
    b. THE CONTRACTOR SHALL NOT TRENCH OR INSTALL CONDUITS (ON THE UTILITY OR LOAD SIDE) TO THE SES, THE UTILITY TRANSFORMER (PRIMARY OR SECONDARY), OR TO THE UTILITY CONNECTION POINT BEFORE RECEIVING A FINAL DESIGN FROM THE UTILITY.
    c. THE CONTRACTOR SHALL NOT INSTALL EQUIPMENT PADS FOR THE SES OR ANY UTILITY EQUIPMENT (TRANSFORMERS, SWITCHING CABINETS, ETC) PRIOR TO RECEIPT OF FINAL PLANS FROM THE UTILITY.
    d. THE CONTRACTOR SHALL NOT BE COMPENSATED FOR ADDITIONAL WORK REQUIRED TO MEET THE REQUIREMENTS OF THE UTILITY WHICH IS THE RESULT OF PROCEEDING PRIOR TO RECEIPT OF A FINAL UTILITY DESIGN.
30. FIRE ALARM SYSTEM NOTES:
    a. SEE PLANS FOR QUANTITIES AND LOCATION OF DEVICES.
    b. THE ELECTRICAL CONTRACTOR SHALL FURNISH A COMPLETE POINT-TO -POINT WIRING DIAGRAM OF THE FIRE ALARM SYSTEM TO THE AUTHORITY HAVING JURISDICTION AND THE ELECTRICAL ENGINEER.
    c. THE ELECTRICAL CONTRACTOR SHALL FURNISH A COMPLETE PLAN OF THE FIRE ALARM SYSTEM TO THE AUTHORITY HAVING JURISDICTION AND THE ELECTRICAL ENGINEER FOR APPROVAL. THE PLAN SHALL INDICATE THE MOUNTING HEIGHT OF EACH DEVICE, IT' AREA OF COVERAGE (AS LISTED BY THE MANUFACTURER FOR THE SPECIFIC INSTALLATION), AND ROUTING OF THE INTERCONNNECTING CONDUITS.
    d. FIRE CONDUCTORS SHALL BE #14 AWG MINIMUM AND SHALL BE IN ACCORDANCE WITH ARTICLE 760-16 OF THE NEC.
    e. FIRE ALARM CONDUIT SHALL BE 3/4" MINIMUM TRADE SIZE.
    f. THE FIRE ALARM SYSTEM SHALL COMPLY WITH THE SPECIFICATIONS.
    h. ALL JUNCTION BOXES SHALL BE FURNISHED WITH BOX LUG-TYPE TERMINAL BLOCKS WITH 20% SPARES.
    i. ALL RETURN WIRES SHALL BE PHYSICALLY SEPARATED FROM OUTGOING WIRES BY A DISTANCE OF NO LESS THAN 6'-0".
    j. PROVIDE 20% SPARE CONDUCTORS IN CONDUITS BETWEEN BUILDINGS.
    k. ONE SET OF APPROVED DRAWINGS MUST BE MAINTAINED ON-SITE AND MADE AVAILABLE TO THE INSPECTOR UPON REQUEST.
    l. THE FIRE DEPARTMENT SHALL WITNESS THE FINAL ACCEPTANCE TEST OF THE ALARM SYSTEM. CALL TO SCHEDULE AN APPOINTMENT AT LEAST 72 HOURS IN ADVANCE.
    m. THE CONTRACTOR SHALL SCHEDULE A COURTESY PRE-INSPECTION BY THE FIRE INSPECTOR AFTER DEVICES HAVE BEEN ROUGHED-IN, PRIOR TO CLOSING IN OF WALLS AND CEILINGS. PROVIDE AT LEAST 72 HOURS ADVANCE NOTICE TO THE INSPECTOR AND THE ELECTRICAL ENGINEER.
    n. FIRE PROTECTION SYSTEMS SHALL BE INSTALLED BY A CONTRACTOR LICENSED TO PERFORM SUCH WORK (WITH A CURRENT PERMIT FOR SUCH WORK) BY THE STATE OF ARIZONA.
    o. ELECTRICALLY OPERATED WATERFLOW ALARM DEVICES ATTACHED TO SPRINKLER SYSTEMS TO PROVIDE REQUIRED SUPERVISION SHALL BE INTERCONNECTED TO THE FIRE ALARM SYSTEM IN ACCORDANCE WITH THE APPROPRIATE NFPA STANDARD.
    p. ALARM SYSTEM SUPERVISION OF SPRINKLER SYSTEM TROUBLE AND WATERFLOW INDICATIONS IN BUILDINGS MORE THAN ONE STORY HIGH SHALL BE PROVIDED BY THE FIRE ALARM SYSTEM IN ACCORDANCE WITH NFPA-13, SECTION 3-12.6.
    q. THE CONTRACTOR SHALL PROVIDE THE FIRE INSPECTOR ON COPY OF A "FIRE ALARM SYSTEM CERTIFICATION AND DESCRIPTION" RECORD WITH SECTION 1 AND SECTIONS 3 THROUGH 0 FULLY FILLED OUT IMMEDIATELY PRIOR TO THE START OF THE FINAL ACCEPTANCE TEST. ONE COPY OF THE COMPLETED FORM WILL THEN BE GIVEN TO THE INSPECTOR IMMEDIATELY UPON SUCCESSFUL COMPLETION OF THE TEST.
    r. CONDUIT AND CABLE SHALL BE RUN IN A CLASS 'A' CONFIGURATION.
    s. ALL DEVICES, AND THEIR INSTALLATIONS, SHALL MEET ADA REQUIREMENTS.
    t. WIRING SHALL BE AS RECOMMENDED BY THE FIRE ALARM EQUIPMENT MANUFACTURER. THE CONTRACTOR SHALL SIZE ALL CIRCUITS (INITIATION AND NOTIFICATION) SO THAT AN ADDITIONAL 25% IN THE NUMBER OF DEVICES COULD BE ADDED WITHOUT HAVING TO INCREASE WIRE SIZE, POWER SUPPLY, OR BATTERY SIZE. FOR CALCULATION PURPOSES, ASSUME THE ADDITIONAL DEVICES HAVE THE SAME LOAD AS THE LARGEST DEVICE ON THE CIRCUIT, AS DESIGNED.

ABBREVIATIONS

SOME ABBREVIATIONS MAY NOT BE USED

A	AMPS / AMPERES	IMC	INTERMEDIATE METAL CONDUIT
AFF	ABOVE FINISHED FLOOR	IG	ISOLATED GROUND
AFG	ABOVE FINAL GRADE	KCMIL	1000 CIRCULAR MILLS (MCM)
AWG	AMERICAN WIRE GAUGE	LFMC	LIQUID-TIGHT FLEX METAL CONDUIT
C	CONDUIT	LFNC	LIQUID-TIGHT FLEX NON-METAL CONDUIT
CU	COPPER MATERIAL	N1	NEMA 1
EF	EXHAUST FAN	N3R	NEMA 3R
EMT	ELECTRICAL METALLIC TUBING	NL	NIGHT LIGHT
ENT	ELECTRICAL NON-METAL TUBING	RNC	RIGID NONMETAL CONDUIT
ER	EXISTING TO BE RELOCATED	SES	SERVICE ENTRANCE SECTION
EX	EXISTING TO REMAIN	UNO	UNLESS NOTED OTHERWISE
FMC	FLEXIBLE METAL CONDUIT	WP	WEATHERPROOF
GFI	GROUND FAULT INTERRUPTING	XP	EXPLOSION PROOF
GND	GROUND	XR	EXISTING TO BE REMOVED

ELECTRICAL SHEET INDEX

VERIFY ALL SHEETS LISTED ARE INCLUDED

E-0.1	GENERAL NOTES / LEGENDS / SHEET INDEX
E-0.2	ELECTRICAL SITE PLAN
E-1.1	POWER PLAN - WAREHOUSE
E-1.2	LIGHTING PLAN - WAREHOUSE
E-1.3	LIGHTNING PROTECTION - WAREHOUSE
E-1.4	SPECIAL SYSTEMS - WAREHOUSE
E-2.1	POWER PLAN - OFFICE
E-2.2	LIGHTING PLAN - OFFICE
E-2.3	LIGHTNING PROTECTION - OFFICE
E-2.4	SPECIAL SYSTEMS - OFFICE
E-3.1	POWER PLAN - VISITOR CENTER
E-3.2	LIGHTING PLAN - VISITOR CENTER
E-3.3	LIGHTNING PROTECTION - VISITOR CENTER
E-3.4	SPECIAL SYSTEMS - VISITOR CENTER
E-4.1	SCHEMATIC DIAGRAMS / CALCULATIONS
E-4.2	EQUIPMENT SCHEDULES
E-4.3	EQUIPMENT SCHEDULES
E-5.1	INSTALLATION DETAILS
E-5.2	INSTALLATION DETAILS

SYMBOLS LEGEND

SOME SYMBOLS MAY NOT BE USED

LIGHTING

- NOMINAL 2'x4' RECESSED FLUORESCENT LUMINAIRE.
- INDICATES SWITCH CONTROLLING THE FIXTURE.
- INDICATES THE FIXTURE TYPE AS LISTED IN THE LIGHTING FIXTURE SCHEDULE.
- INDICATES THE CIRCUIT THE FIXTURE IS FED FROM.
- FLUORESCENT STRIP FIXTURE, LENGTH PER PLAN.
- NOMINAL 1'x4' RECESSED CEILING-MOUNTED LUMINAIRE.
- SURFACE, WALL-MOUNTED LIGHT FIXTURE.
- RECESSED, WALL-MOUNTED LIGHT FIXTURE.
- RECESSED, CEILING-MOUNTED LIGHT FIXTURE.
- SURFACE, CEILING MOUNTED FIXTURE
- SOLID 'JBOX' ON ANY FIXTURE INDICATES A FIXTURE WITH AN INTEGRAL EMERGENCY POWER SUPPLY.
- RECESSED, WALL-WASH CEILING-MOUNTED LIGHT FIXTURE
- DUAL HEAD EMERGENCY LIGHT FIXTURE WITH INTEGRAL BATTERY BACKUP.
- CEILING MOUNTED EXIT SIGN WITH INTEGRAL BATTERY BACKUP.
- WALL-MOUNTED EXIT SIGN WITH INTEGRAL BATTERY BACKUP.
- BOLLARD-TYPE LIGHT FIXTURE.
- POLE-MOUNTED LIGHT FIXTURE.

DEVICES

- SINGLE POLE TOGGLE SWITCH
- THREE-WAY TOGGLE SWITCH
- DIMMER SWITCH
- DUPLEX CONVENIENC RECEPTACLE
- CROSS "SLASH" ON ANY RECEPTACLE SYMBOL INDICATES INTEGRAL GROUND FAULT PROTECTION.
- DOUBLE DUPLEX (QUAD) CONVENIENCE RECEPTACLE
- SINGLE (SIMPLEX) CONVENIENCE RECEPTACLE
- DUPLEX CONVENIENCE RECEPTACLE MOUNTED ABOVE MILLWORK OR AS NOTED ON ARCHITECTURAL ELEVATIONS.
- DOUBLE DUPLEX (QUAD) CONVENIENCE RECEPTACLE MOUNTED AS REQUIRED BY MILLWORK.
- SPLIT WIRED DUPLEX CONVENIENCE RECEPTACLE
- DUPLEX CONVENIENCE RECEPTACLE WITH AN ISOLATED GROUND CONNECTION.
- SPECIAL PURPOSE RECEPTACLE AS NOTED ON THE DRAWINGS. NEMA CONFIGURATION AS INDICATED ON THE PLANS OR AS REQUIRED BY THE EQUIPMENT.
- JUNCTION BOX. 'C' = CEILING MOUNTED. 'F' = FLOOR MOUNTED (SUBSCRIPTS ARE TYPICAL FOR ALL DEVICES).
- POWER / VOICE-DATA DIVIDED RACEWAY OR OUTLET STRIP.
- POWER / VOICE-DATA DIVIDED RACEWAY SERVICE POLE.
- VOICE OUTLET
- DATA OUTLET
- VOICE AND DATA OUTLET IN A COMMON OUTLET BOX
- TELEVISION COAXIAL CABLE OUTLET

FIRE ALARM

- MANUAL PULL STATION
- WATER FLOW SWITCH
- VALVE TAMPER SWITCH
- SMOKE DETECTOR
- HEAT DETECTOR
- DUCT SMOKE DETECTOR
- FIRE/SMOKE DAMPER
- HORN STROBE NOTIFICATION APPLIANCE
- STROBE NOTIFICATION APPLIANCE
- BELL STROBE NOTIFICATION APPLIANCE

POWER

- HORSEPOWER-RATED MANUAL MOTOR STARTER WITH INTEGRAL THERMAL OVERLOADS.
- LIGHTING CONTACTOR IN SURFACE-MOUNTED ENCLOSURE.
- COMBINATION MOTOR CONTROLLER PROVIDED BY THE UTILIZATION EQUIPMENT VENDOR.
- 30A, N3R, POLES ARE REQUIRED, COMBINATION MOTOR CONTROLLER, PROVIDED AND INSTALLED BY THE ELECTRICAL CONTRACTOR.
- FUSIBLE DISCONNECT SWITCH; NEMA 3R, 250V, POLES AS REQUIRED, UNLESS NOTED OTHERWISE. INSTALL FUSES SIZED AS REQUIRED BY THE UTILIZATION EQUIPMENT MANUFACTURER.
- ELECTRIC MOTOR, RATED AS SHOWN ON THE PLANS.
- TRANSFORMER RATED AS SHOWN ON THE SINGLE-LINE DIAGRAM.
- SURFACE-MOUNTED PANELBOARD.
- FLUSH MOUNTED PANEBOARD.

WIRE/CONDUIT

- FLEXIBLE CONDUIT
- CONDUIT CONCEALED IN WALLS OR ABOVE THE CEILING.
- CONDUIT ROUTED UNDER FLOOR OR BELOW GRADE.
- CONDUIT TURNING UP OR DOWN.
- INDICATES AN EQUIPMENT GROUNDING CONDUCTOR
- INDICATES AN ISOLATED GROUND CONDUCTOR (SAME SIZE AS EQUIPMENT GROUNDING CONDUCTOR)
- INDICATES A GROUNDED (NEUTRAL) CONDUCTOR
- INDICATES A PHASE CONDUCTOR

SINGLE-LINE DIAGRAM

- CIRCUIT BREAKER, FIXED MOUNTING
- FUSIBLE SWITCH
- DISTRIBUTION TRANSFORMER
- CURRENT TRANSFORMER
- METERING DEVICE
- PANELBOARD, MAIN LUG ONLY
- PANELBOARD, MAIN CIRCUIT BREAKER
- MANUAL OR AUTOMATIC TRANSFER SWITCH, AS NOTED.
- FUSIBLE SWITCH COMBINATION MOTOR CONTROLLER
- CIRCUIT BREAKER COMBINATION MOTOR CONTROLLER

DRAFTING

DETAIL SYMBOL
- SECTION DESIGNATION
- LOCATION OF SECTION DETAIL (SHEET NUMBER)

ELEVATION DETAIL SYMBOL
- OBSERVATION DIRECTION FOR SECTION
- SECTION DESIGNATION
- LOCATION OF SECTION DETAIL (SHEET NUMBER)
- GENERAL AREA OF "CUT" FOR SECTION

SECTION DETAIL SYMBOL
- OBSERVATION DIRECTION FOR SECTION
- SECTION DESIGNATION
- LOCATION OF SECTION DETAIL (SHEET NUMBER)
- GENERAL AREA OF "CUT" FOR SECTION

U.S. DEPARTMENT OF AGRICULTURE
FOREST SERVICE
R-3
SOUTHWESTERN REGION

PolyPhase Engineering
14469 N. 54TH PLACE
SCOTTSDALE, ARIZONA 85254
PHONE: 602-569-0668
FAX: 480-452-0742

DRAFTED BY:	JEC
DESIGNED BY:	JEC
CHECKED BY:	JEC
DRAWING CREATED	5/15/06
PROJECT NUMBER	C06007

DESIGN/DRAWN: JACK CORNELL
CHECKED: JACK CORNELL
FACILITY REVIEW:
UNION REVIEW:
ACCESSIBILITY REVIEW:

Forest: COCONINO NATIONAL FOREST

Project Name: A NEW OFFICE BUILDING FOR THE RED ROCK RANGER DISTRICT

Sheet Title: GENERAL NOTES / LEGENDS SHEET INDEX

Scale: AS SHOWN

Sheet: E0.1

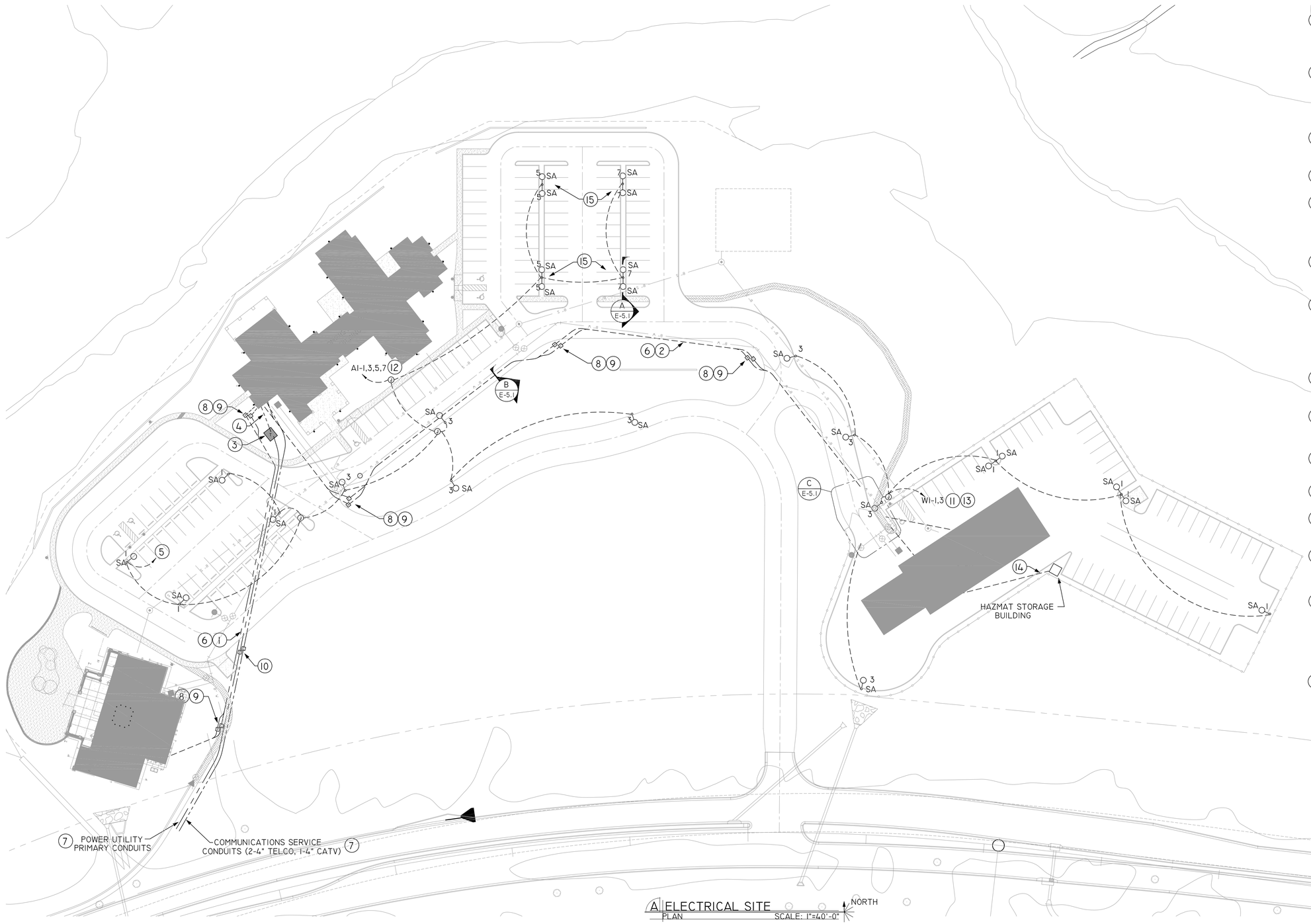

A ELECTRICAL SITE PLAN
SCALE: 1"=40'-0"

KEYED NOTES

1. POWER AND COMMUNICATIONS CONDUITS FROM THE ADMINISTRATION BUILDING TO THE VISITOR CENTER. PROVIDE A SINGLE 4" CONDUIT FOR THE COMMUNICATIONS; SEE THE SINGLE-LINE DIAGRAM FOR THE POWER CONDUIT SIZE AND NUMBER.
2. POWER AND COMMUNICATIONS CONDUITS FROM THE ADMINISTRATION BUILDING TO THE WAREHOUSE BUILDING. PROVIDE A SINGLE 4" CONDUIT FOR THE COMMUNICATIONS; SEE THE SINGLE-LINE DIAGRAM FOR THE POWER CONDUIT SIZE AND NUMBER.
3. PROPOSED LOCATION OF THE SITE UTILITY TRANSFORMER. SEE THE SINGLE-LINE DIAGRAM FOR INSTALLATION REQUIREMENTS.
4. UTILITY SECONDARY CONDUITS TO THE SES LOCATED IN THE ADMINISTRATION BUILDING.
5. 1.5" EMPTY CONDUIT STUBBED INTO THE POLE, THROUGH THE BASE, FOR FUTURE CCTV SECURITY SYSTEM. TERMINATE IN THE COMMUNICATIONS ROOM, 6" AFF. INSTALL A PULL CORD & CAP FOR FUTURE USE. THIS IS TYPICAL FOR ALL LIGHT POLES.
6. DATA CABLING BETWEEN BUILDINGS SHALL BE MULTI-MODE FIBEROPTIC IN ACCORDANCE WITH THE SPECIFICATIONS.
7. SEE THE CIVIL PLANS FOR ROUTING OF THE MAIN WATER LINE. ROUTE THESE CONDUITS IN A COMMON UTILITY TRENCH, ALONGSIDE THE WATER LINE, WITH BURIAL DEPTHS AND SEPARATION AS REQUIRED BY THE UTILITIES (MINIMUM OF 24" BETWEEN THE WATER OR SEWER AND APS UTILITY CONDUITS).
8. 2'x2' CONCRETE PULL BOX, FOR POWER CONDUITS, WITH AN OPEN BOTTOM AND BOLTED STEEL COVER LABELED "ELECTRIC".
9. 2'x2' CONCRETE PULL BOX, FOR VOICE/DATA CONDUITS, WITH AN OPEN BOTTOM AND BOLTED STEEL COVER LABELED "COMMUNICATIONS".
10. PULL BOXES SIZED AS REQUIRED BY THE LOCAL UTILITIES. PROVIDE ADDITIONAL PULL BOXES AS REQUIRED BY THE UTILITIES.
11. ROUTE THESE CIRCUITS THROUGH THE LIGHTING CONTROLLER OF THE WAREHOUSE BUILDING.
12. ROUTE THESE CIRCUITS THROUGH THE LIGHTING CONTROLLER IN THE ADMINISTRATION BUILDING ELECTRICAL ROOM.
13. FOR LIGHT POLES ON THESE CIRCUITS, THE CCTV CONDUIT REQUIRED BY NOTE 5 ABOVE SHOULD TERMINATE IN THE WAREHOUSE COMMUNICATIONS ROOM.
14. FEEDER FOR A HAZARDOUS MATERIALS STORAGE BUILDING AT APPROXIMATELY THE LOCATION SHOWN. COORDINATE WITH THE CONTRACTING OFFICER TO DETERMINE THE EXACT LOCATION OF THE STUBOUT REQUIRED. ONCE THE BUILDING IS SET ON THE SITE, PULL THE FEEDER CONDUCTORS AND CONNECT TO THE BUILDING PANEL.
15. ACTUAL PARKING LOT LAYOUT WILL BE DIFFERENT THAN SHOWN ON THIS PLAN. SEE CIVIL SHEETS FOR TRUE LAYOUT AND FIELD LOCATE LIGHT POLES IN PARKING LOT ISLANDS. POLES SHALL BE IN THE SAME GENERAL VICINITY AS SHOWN ON THIS PLAN.

U.S. DEPARTMENT OF AGRICULTURE
FOREST SERVICE
R-3
SOUTHWESTERN REGION

Y:\Templates\Logo\Polyphase.jpg

14469 N. 54TH PLACE
SCOTTSDALE, ARIZONA 85254
PHONE: 602-569-0668
FAX: 480-452-0742

DRAFTED BY:	JEC
DESIGNED BY:	JEC
CHECKED BY:	JEC
DRAWING CREATED	5/15/06
PROJECT NUMBER	C06007

DESIGN/DRAWN: JACK CORNELL
CHECKED: JACK CORNELL
FACILITY REVIEW:
UNION REVIEW:
ACCESSIBILITY REVIEW:

Forest: COCONINO NATIONAL FOREST

Project Name: A NEW OFFICE BUILDING FOR THE RED ROCK RANGER DISTRICT

Sheet Title: ELECTRICAL SITE PLAN

Scale: AS SHOWN

Sheet: E0.2

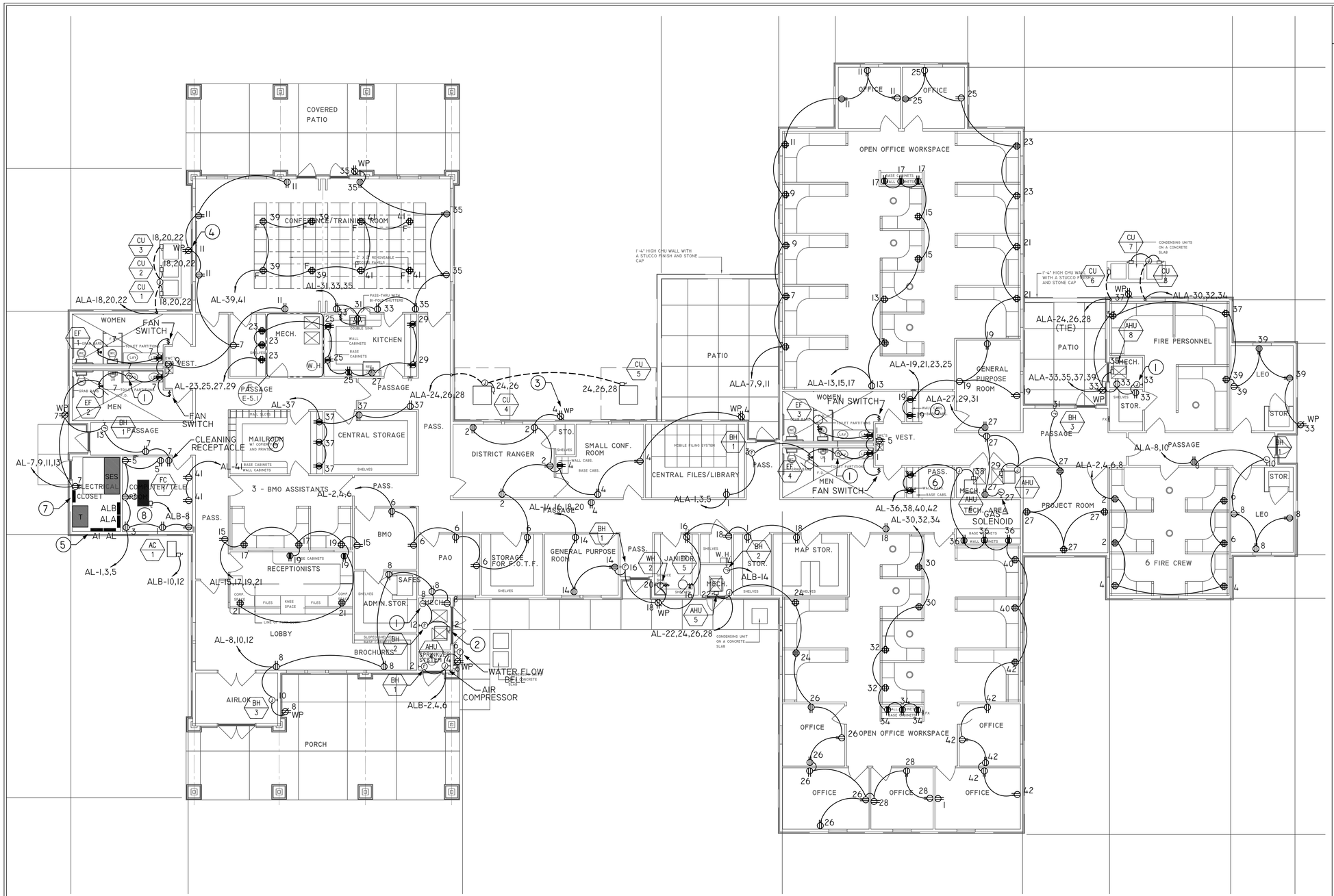

A POWER / SYSTEMS - OFFICE BUILDING
PLAN SCALE: 1/8"=1'-0"
NORTH

KEYED NOTES

1. RECYCLE TIMER FOR TRAP PRIMER. SEE THE PLUMBING PLANS FOR THE EXACT LOCATION.
2. COORDINATE THE LOCATION OF DISCONNECTS WITH THE MECHANICAL CONTRACTOR TO INSURE PROPER CLEARANCES ARE PROVIDED FOR THE DISCONNECTS AFTER INSTALLATION.
3. COVERS FOR EXTERIOR OUTLET BOXES SHALL BE LISTED AS WEATHERTIGHT "WHILE-IN-USE". RECESS THE OUTLET BOX COVER SO THE COVER IS FLUSH WITH THE EXTERIOR WALL SURFACE.
4. WEATHERPROOF MAINTENANCE OUTLET, MOUNTED AS SHOWN ADJACENT TO THE MECHANICAL UNIT.
5. PROVIDE ALL OF THE ELECTRICAL PANELS IN ACCORDANCE WITH THEIR EQUIPMENT SCHEDULES.
6. MOUNT POWER OUTLETS IN THIS ROOM 6" ABOVE THE SHELVING OR COUNTER AT THE LOCATION SHOWN.
7. LIGHTING CONTROLLER WITH INTERGRAL CONTACTOR, ASTRONOMIC TIMECLOCK, 8 OUTPUT RELAYS, AND BATTERY BACKUP: PCI LITEKEEPER 8 OR EQUAL.
8. MOUNT RECEPTACLES IN THIS ROOM AT 42" AFF TO THE TOP OF THE OUTLET BOX. ALL OUTLETS IN THIS ROOM (EXCEPT THE CLEANING RECEPTACLE) SHALL HAVE INTEGRAL TVSS PROTECTION, RATED 10KA PER PHASE AND 330V SVR VOLTAGE. THIS IS TYPICAL FOR ALL RECEPTACLES IN COMMUNICATIONS ROOMS.

U.S. DEPARTMENT OF AGRICULTURE
FOREST SERVICE
R-3
SOUTHWESTERN REGION

PolyPhase Engineering
14469 N. 54TH PLACE
SCOTTSDALE, ARIZONA 85254
PHONE: 602-569-0668
FAX: 480-452-0742

DRAFTED BY:	JEC
DESIGNED BY:	JEC
CHECKED BY:	JEC
DRAWING CREATED	5/15/06
PROJECT NUMBER	C06007

DESIGN/DRAWN: JACK CORNELL
CHECKED: JACK CORNELL
FACILITY REVIEW:
UNION REVIEW:
ACCESSIBILITY REVIEW:

Forest: COCONINO NATIONAL FOREST
Project Name: A NEW OFFICE BUILDING FOR THE RED ROCK RANGER DISTRICT

Sheet Title: POWER PLAN OFFICE BUILDING
Scale: AS SHOWN
Sheet: E2.1

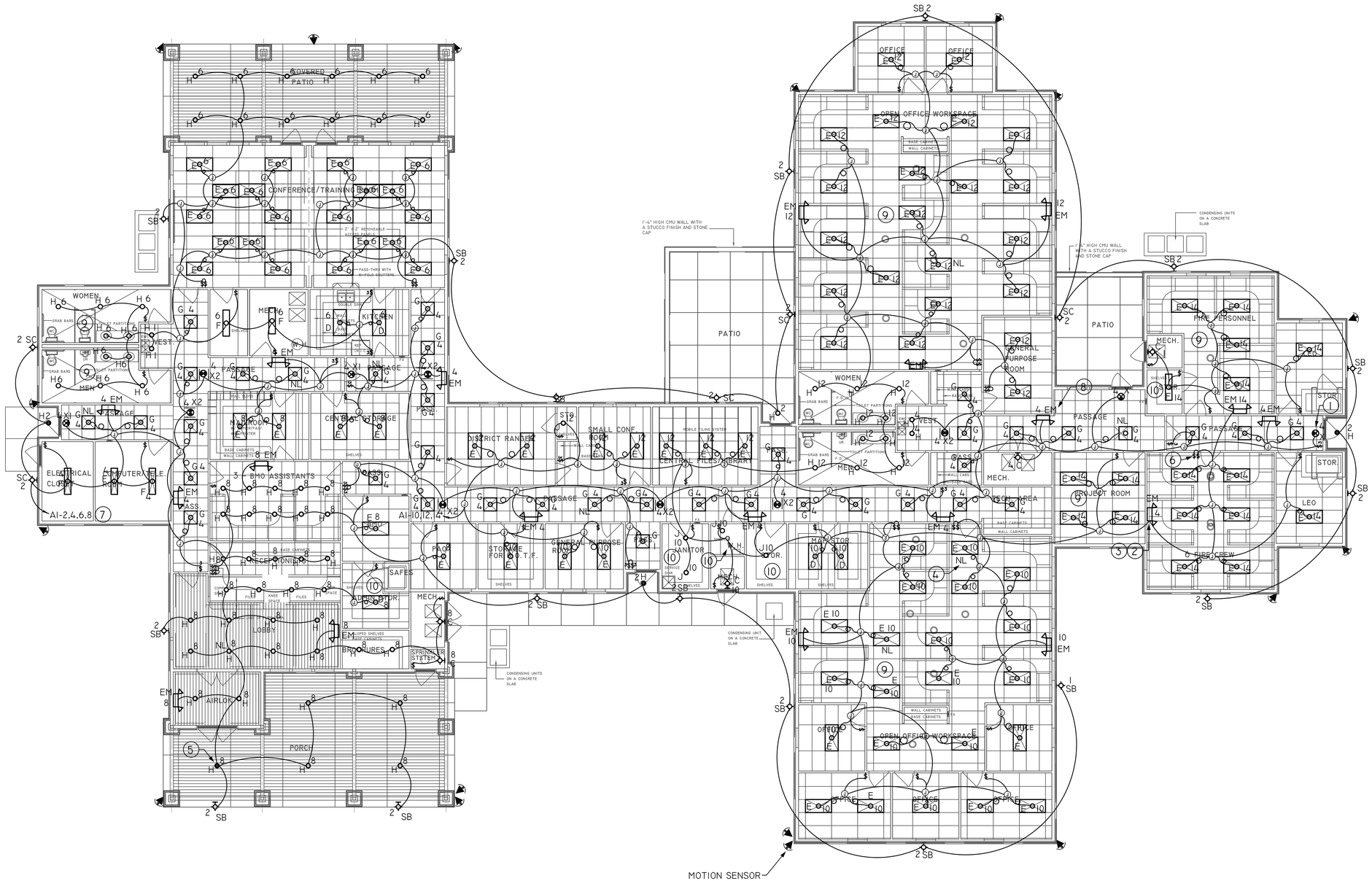

A LIGHTING - OFFICE BUILDING
PLAN SCALE: 1/8"=1'-0"

KEYED NOTES

1. MOUNT EXIT SIGNS WITH THE BOTTOM OF THE FIXTURE 6" ABOVE THE TOP OF THE DOORWAY OPENING.
2. INDICATES AN EMERGENCY LIGHTING UNIT WITH INTEGRAL BATTERY BACKUP.
3. CONNECT EXIT SIGNS AND EMERGENCY LIGHTING UNITS TO THE CIRCUITS SHOWN, AHEAD OF ANY SWITCHING.
4. INDICATES A NIGHT LIGHT FIXTURE, CONNECTED AHEAD OF ANY SWITCHING.
5. SOLID JBOX INDICATES A LIGHT FIXTURE WITH AN INTEGRAL EMERGENCY BALLAST. CONNECT TO THE CIRCUIT SHOWN, AHEAD OF ANY SWITCHING.
6. IN OFFICES WHERE TWO SWITCHES ARE PROVIDED, ONE SWITCH SHALL BE CONNECTED TO CONTROL THE FIXTURES CLOSEST TO THE WINDOWS.
7. ROUTE CIRCUIT #2 THROUGH THE LIGHTING CONTROLLER IN THE ELECTRICAL ROOM FOR AUTOMATIC CONTROL.
8. EMERGENCY LIGHTING UNITS SHALL BE TYPE EM UNLESS LABELED OTHERWISE, MOUNT THE FIXTURES SO THE TOP OF THE FIXTURE IS 2" BELOW THE CEILING IN CORRIDORS.
9. PROVIDE A CERTIFIED CEILING-MOUNTED OCCUPANCY SENSOR TO CONTROL LIGHTING WITHIN THIS SPACE. PROVIDE A MANUAL OVER-RIDE LIMITED TO A MAXIMUM OF 2 HOURS.
10. PROVIDE A WALL SWITCH TYPE OCCUPANCY SENSOR TO CONTROL LIGHTING WITHIN THIS SPACE. THE SWITCH MUST BE LISTED IN THE DIRECTORY OF AUTOMATIC LIGHTING CONTROL DEVICES AND HAVE AN INTEGRAL MANUAL OVER-RIDE LIMITED TO A MAXIMUM OF 2 HOURS.

U.S. DEPARTMENT OF AGRICULTURE
FOREST SERVICE
R-3
SOUTHWESTERN REGION

PolyPhase Engineering
14469 N. 54TH PLACE
SCOTTSDALE, ARIZONA 85254
PHONE: 602-569-0668
FAX: 480-452-0742

DRAFTED BY:	JEC
DESIGNED BY:	JEC
CHECKED BY:	JEC
DRAWING CREATED	5/15/06
PROJECT NUMBER	C06007

DESIGN/DRAWN: JACK CORNELL
CHECKED: JACK CORNELL
FACILITY REVIEW:
UNION REVIEW:
ACCESSIBILITY REVIEW:

Forest: COCONINO NATIONAL FOREST
Project Name: A NEW OFFICE BUILDING FOR THE RED ROCK RANGER DISTRICT

Sheet Title: LIGHTING PLAN OFFICE BUILDING
Scale: AS SHOWN
Sheet: E2.2

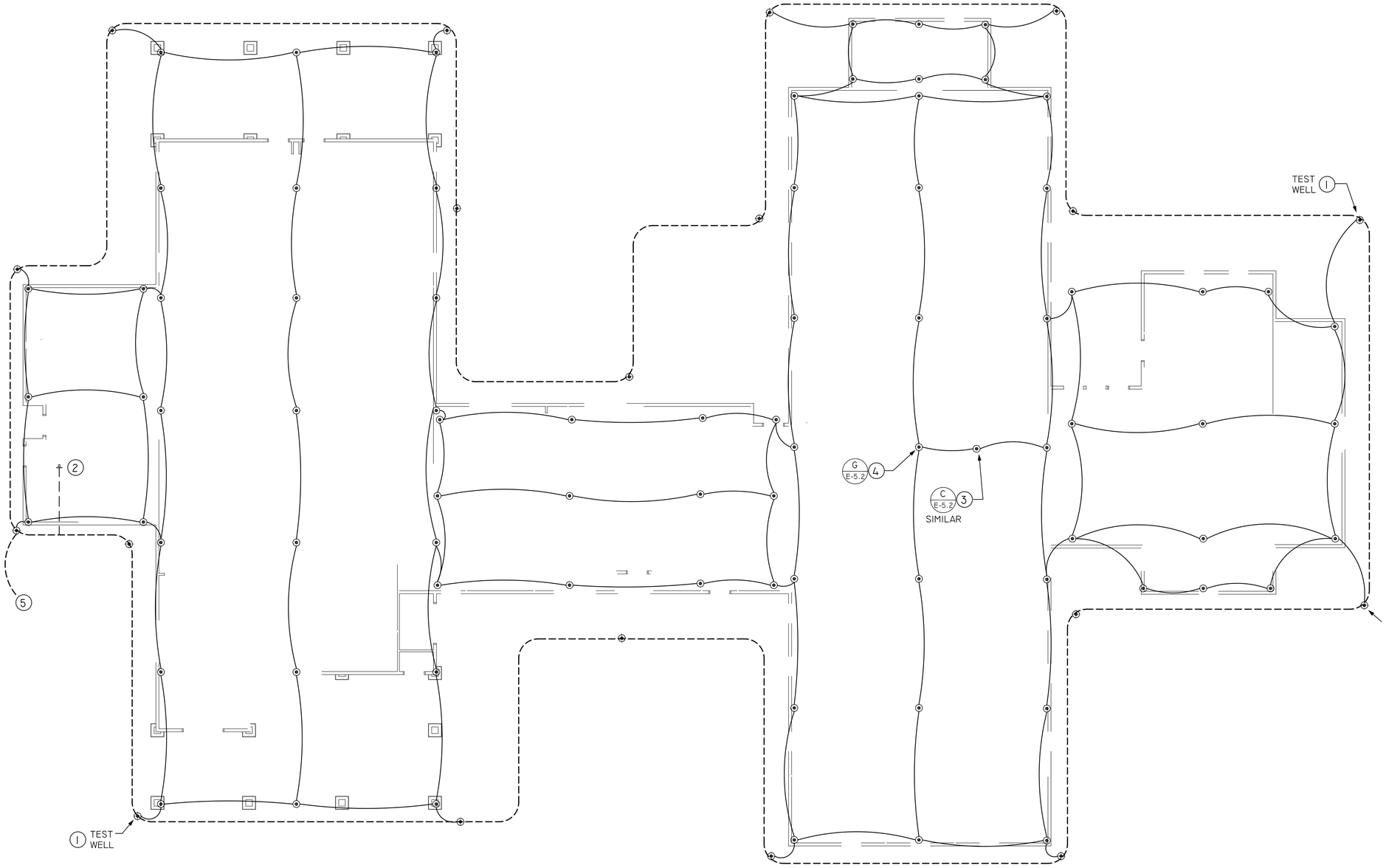

A LIGHTNING PROTECTION SYSTEM - OFFICE BUILDING
PLAN
SCALE: 1/8"=1'-0"
NORTH

KEYED NOTES

1. AT ALL TEST WELL LOCATIONS, PROVIDE A JUNCTION BOX OVER THE GROUND PLATE TO ALLOW ACCESS TO THE GROUND LOOP. PROVIDE EXTRA CABLE WITHIN THE JUNCTION BOX TO ALLOW PERIODIC TESTING OF THE COUNTERPOISE LOOP WITHOUT DISTURBING THE INSTALLATION.
2. APPROXIMATE LOCATION OF THE ELECTRICAL SERVICE ENTRANCE EQUIPMENT. BOND THE SERVICE ENTRANCE SECTION GROUND BUS TO THE COUNTERPOISE SYSTEM.
3. INSTALL AIR TERMINALS ON MECHANICAL EQUIPMENT AND CONNECT TO THE MAIN RIDGE CONDUCTOR. SEE THE MECHANICAL DRAWINGS FOR LOCATIONS OF ROOF-MOUNTED EQUIPMENT.
4. MOUNT AIR TERMINALS AT THE LOCATIONS SHOWN USING A "THROUGH-THE-ROOF" CONNECTOR. ROUTE ALL CONDUCTORS IN THE CEILING SPACE BELOW THE ROOF THROUGHOUT THE FACILITY.
5. DETERMINE THE LOCATION OF FLAG POLES, IF ANY, AND BOND THEM TO THE LIGHTNING PROTECTION SYSTEM PER DETAIL A, SHEET E5.2.

U.S. DEPARTMENT OF AGRICULTURE
FOREST SERVICE
R-3
SOUTHWESTERN REGION

PolyPhase Engineering
14469 N. 54TH PLACE
SCOTTSDALE, ARIZONA 85254
PHONE: 602-569-0668
FAX: 480-452-0742

DRAFTED BY:	JEC
DESIGNED BY:	JEC
CHECKED BY:	JEC
DRAWING CREATED	5/15/06
PROJECT NUMBER	C06007

DESIGN/DRAWN: JACK CORNELL
CHECKED: JACK CORNELL
FACILITY REVIEW:
UNION REVIEW:
ACCESSIBILITY REVIEW:

Forest: COCONINO NATIONAL FOREST
Project Name: A NEW OFFICE BUILDING FOR THE RED ROCK RANGER DISTRICT

Sheet Title: LIGHTNING PROTECTION SYSTEM OFFICE BUILDING
Scale: AS SHOWN
Sheet: E2.3

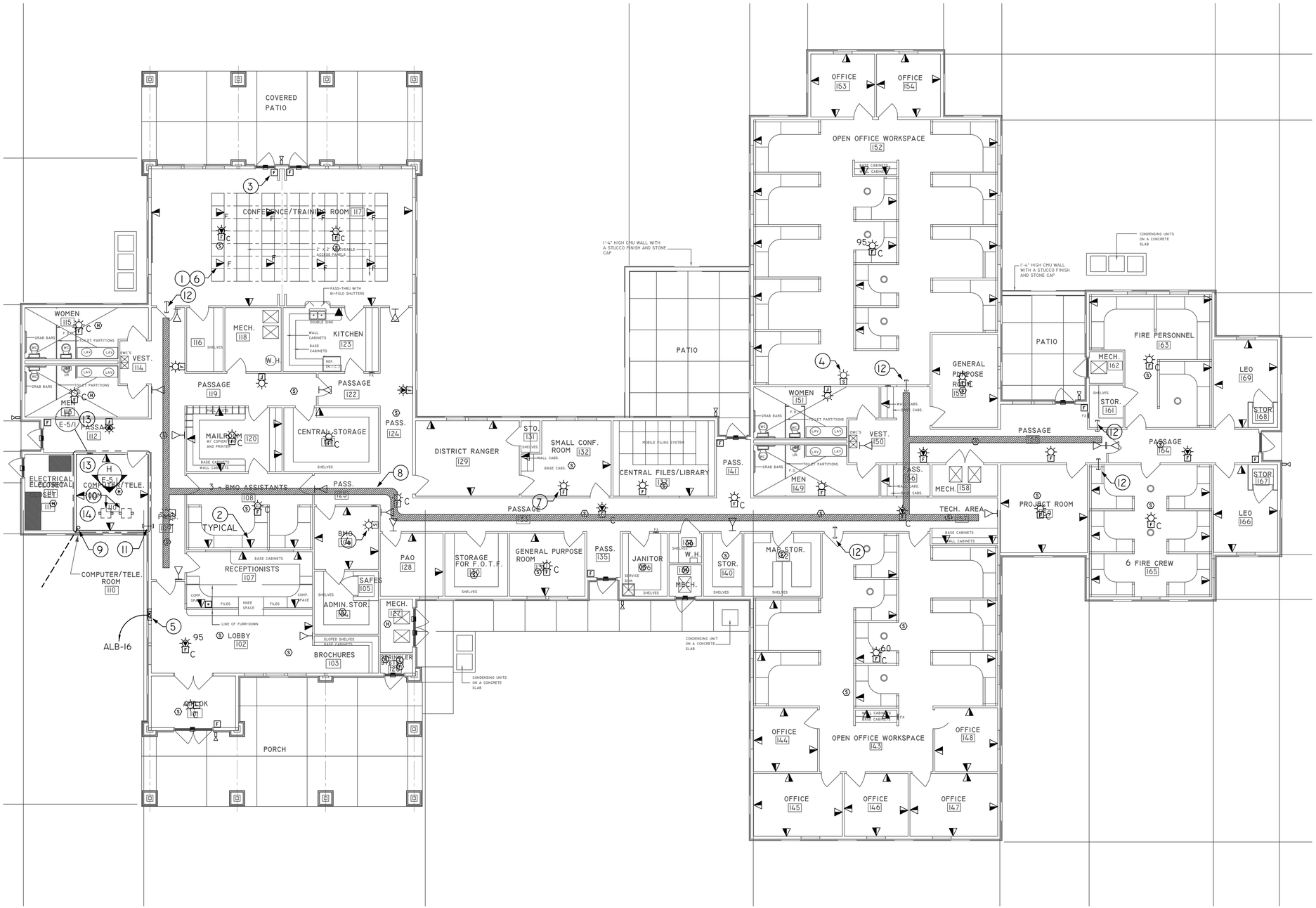

A SPECIAL SYSTEMS - OFFICE BUILDING
PLAN
SCALE: 1/8"=1'-0"
NORTH

KEYED NOTES

1. PROVIDE 3 CATEGORY 6, 4 PAIR CABLES TO EACH FLOOR BOX AND EACH VOICE/DATA OUTLET. CABLES SHALL MEET THE REQUIREMENTS OF FOREST SERVICE VOICE AND DATA WIRING SYSTEM SPECIFICATIONS SECTION 2.05 AND ANY OTHER APPLICABLE SECTIONS.
2. SEE DETAIL J, SHEET E5.1, FOR FACEPLATE DETAILS.
3. MOUNT ALL FIRE ALARM SYSTEM DEVICES AT HEIGHTS THAT COMPLY WITH ADA REQUIREMENTS.
4. THIS STROBE SHALL ACTIVATE UPON RECEIPT OF A 'DURESS' SIGNAL AT THE RECEPTION AREA.
5. SECURITY/FIRE SYSTEM CONTROL PANEL. MOUNT WITH THE BOTTOM OF THE PANEL AT 36" AFF. THIS PANEL SHALL BE UL LISTED FOR FIRE & SECURITY SYSTEM CONTROL.
6. THESE FLOOR - MOUNTED VOICE / DATA DEVICES SHALL BE INSTALLED IN THE FLOOR BOXES SHOWN ON SHEET E2.1. FOR EACH VOICE/DATA OUTLET, BOTH FLOOR AND WALL MOUNTED, PROVIDE (3) CAT6, 8-PIN MODULAR T568B TELECOM OUTLET CONNECTORS, EACH TERMINATED TO ONE OF THE THREE 4-PAIR CONDUCTORS TO BE PROVIDED TO EACH OUTLET. CONNECTORS SHALL MEET ALL OF THE REQUIREMENTS OF FOREST SERVICE VOICE AND DATA WIRING SYSTEMS SPECIFICATION SECTION 2.07, C, AND ANY OTHER APPLICABLE SECTIONS.
7. STROBES SHALL BE 15 CANDELA RATED UNLESS EXPLICITLY NOTED OTHERWISE.
8. INDICATES ROUTING OF CABLE TRAY ABOVE THE ACCESSIBLE CEILING. COORDINATE WITH THE DUCTWORK INSTALLATION SO THE CABLE TRAY IS ACCESSIBLE ON THE SIDES AND FROM THE TOP FOR THE INSTALLATION OF NEW CABLES IN THE FUTURE, IF REQUIRED.
9. UTILITY CONDUIT STUBOUT LOCATION. VERIFY EXACT STUBOUT REQUIREMENTS WITH THE UTILITY PRIOR TO TRENCHING.
10. 19" EQUIPMENT RACK PROVIDED BY THE CONTRACTOR. EQUIPMENT RACKS SHALL MEET ALL REQUIREMENTS OF FOREST SERVICE VOICE AND DATA WIRING SYSTEMS SPECIFICATIONS SECTION 2.03, SHALL BE INSTALLED IN ACCORDANCE WITH SECTION 3.01, AND SHALL MEET ANY OTHER APPLICABLE REQUIREMENTS.
11. 3 - 4" CONDUIT SLEEVES STUBBED THROUGH THE COMMUNICATION ROOM WALL, ABOVE THE HALLWAY CEILING AND 4" ABOVE THE TOP OF THE CABLE TRAY HEIGHT. SEAL THE CONDUITS, AFTER INSTALLATION OF THE CONDUCTORS, IN A MANNER THAT MAINTAINS THE INTEGRITY AND FIRE RATING OF THE WALL IT PENETRATES.
12. (2) 4" EMPTY EMT CONDUITS STUBBED THROUGH THE WALL FOR DATA CABLING FROM THE ROOM TO THE CORRIDOR CABLE TRAY. INSTALL CABLING WITHIN THE ROOM ON "D" RINGS TO THE CONDUITS, THEN OUTSIDE TO THE CORRIDOR AND INTO THE CABLE TRAY.
13. INSTALL PLYWOOD BACKBOARDS ON THREE WALLS, FLOOR TO CEILING, IN ACCORDANCE WITH FOREST SERVICE AND DATA WIRING SYSTEM SPECIFICATIONS SECTION 2.02 AND ANY OTHER APPLICABLE SECTIONS. PROVIDE A #6 CU GROUND CONDUCTOR WITH SUFFICIENT LENGTH TO REACH ANY POINT IN THE ROOM FROM THE GEC TO THE SES.
14. INSTALL A CU GROUND BAR ALONG THREE SIDES OF THE ROOM IN ACCORDANCE WITH FOREST SERVICE VOICE AND DATA WIRING SYSTEM SPECIFICATION SECTIONS 2.04, 3.01 N, AND ANY OTHER APPLICABLE SECTIONS. INSTALL GROUND BAR AT 12" BELOW THE CEILING. MOUNT ON STANDOFFS SPACED 2' ON CENTER, MAXIMUM.

U.S. DEPARTMENT OF AGRICULTURE
FOREST SERVICE
R-3
SOUTHWESTERN REGION

PolyPhase Engineering
14449 N. 56TH PLACE
SCOTTSDALE, ARIZONA 85254
PHONE: 602-569-0668
FAX: 480-452-0742

DRAFTED BY:	JEC
DESIGNED BY:	JEC
CHECKED BY:	JEC
DRAWING CREATED	5/15/06
PROJECT NUMBER	C06007

DESIGN/DRAWN: JACK CORNELL
CHECKED: JACK CORNELL
FACILITY REVIEW:
UNION REVIEW:
ACCESSIBILITY REVIEW:

Forest: COCONINO NATIONAL FOREST
Project Name: A NEW OFFICE BUILDING FOR THE RED ROCK RANGER DISTRICT

Sheet Title: SPECIAL SYSTEMS PLAN OFFICE BUILDING
Scale: AS SHOWN
Sheet: E2.4

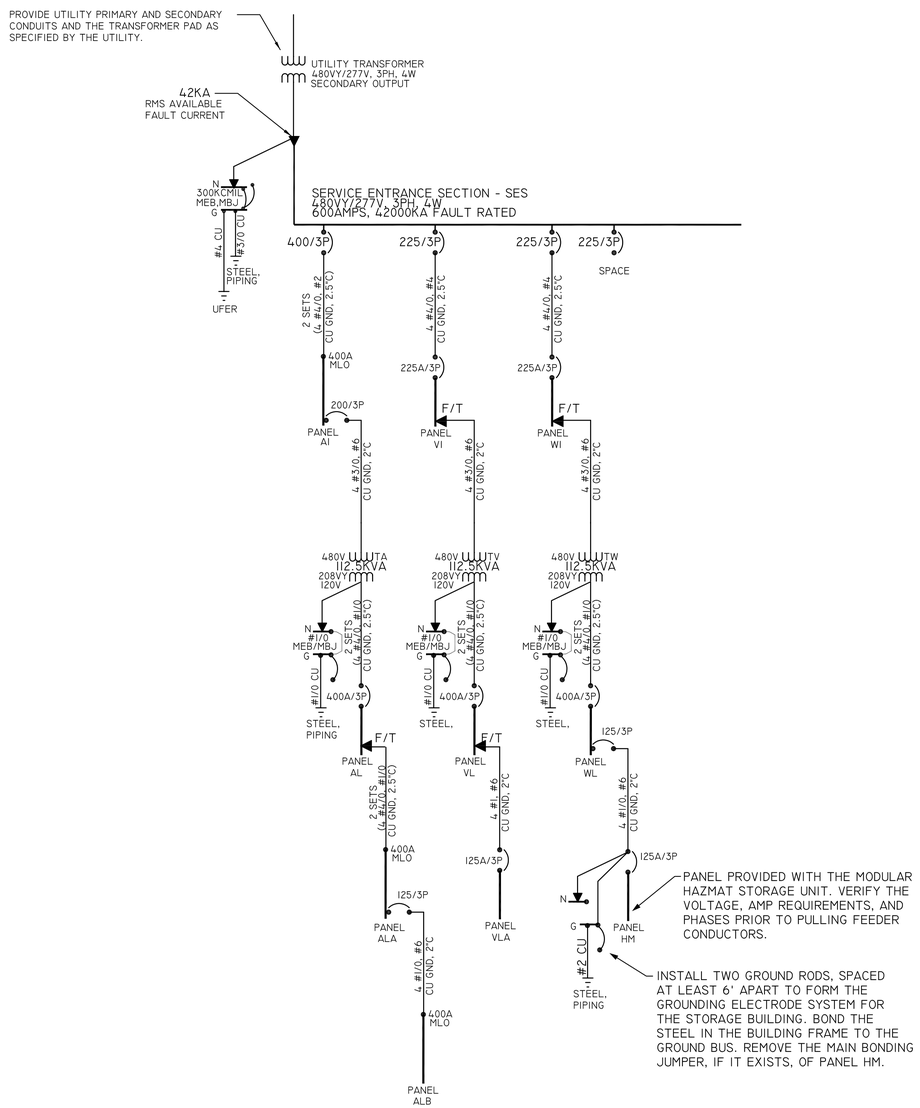

LOAD CALCULATIONS

PANEL	LOAD TYPE	CONNECTED LOAD	DEMAND FACTOR	DEMAND LOAD
VLA	Lighting	4540VA	125%	5675VA
	Mech	5880VA	Motors 125% Largest 100% Rest	7320VA
	Misc	2870VA	100%	2870VA
			Total Load =	15865 VA
			Total Amps @ 208V/3Ph =	44.00 Amps
VL	Lighting	4540VA	125%	5675VA
	Recepts	17009VA	100%	17009VA
	Mech	56316VA	Motors 125% Largest 100% Rest	60060VA
	Misc	8920VA	100%	8920VA
			Total Load =	91664 VA
			Total Amps @ 208V/3Ph =	254.00 Amps
V1	Lighting	13911VA	125%	17388.75VA
	Recepts	17009VA	100%	17009VA
	Mech	56316VA	Motors 125% Largest 100% Rest	60060VA
	Misc	8920VA	100%	8920VA
			Total Load =	103377.75 VA
			Total Amps @ 480V/3Ph =	124.00 Amps
HM	Misc	45000VA	100%	45000VA
			Total Load =	45000 VA
			Total Amps @ 208V/3Ph =	125.00 Amps
WL	Recepts	13334VA	100%	13334VA
	Mech	10950VA	Motors 125% Largest 100% Rest	12840VA
	Misc	53020VA	100%	53020VA
			Total Load =	79194 VA
			Total Amps @ 208V/3Ph =	219.00 Amps
W1	Lighting	11191VA	125%	13988.75VA
	Recepts	13334VA	100%	13334VA
	Mech	12870VA	Motors 125% Largest 100% Rest	14760VA
	Misc	53020VA	100%	53020VA
			Total Load =	95102.75 VA
			Total Amps @ 480V/3Ph =	114.00 Amps
ALB	Mech	6144VA	Motors 125% Largest 100% Rest	7584VA
	Misc	2680VA	100%	2680VA
			Total Load =	10264 VA
			Total Amps @ 208V/3Ph =	28.00 Amps
ALA	Recepts	16706VA	100%	16706VA
	Mech	69516VA	Motors 125% Largest 100% Rest	74772VA
	Misc	8626VA	100%	8626VA
			Total Load =	100104 VA
			Total Amps @ 208V/3Ph =	278.00 Amps
AL	Lighting	1920VA	125%	2400VA
	Recepts	46832VA	100%	46832VA
	Mech	73300VA	Motors 125% Largest 100% Rest	78556VA
	Misc	12496VA	100%	12496VA
			Total Load =	140284 VA
			Total Amps @ 208V/3Ph =	389.00 Amps
A1	Lighting	27462VA	125%	34327.5VA
	Recepts	46832VA	100%	46832VA
	Mech	73300VA	Motors 125% Largest 100% Rest	78556VA
	Misc	12496VA	100%	12496VA
			Total Load =	172211.5 VA
			Total Amps @ 480V/3Ph =	207.00 Amps
SES	Lighting	52564VA	125%	65705VA
	Recepts	77175VA	100%	77175VA
	Mech	142486VA	Motors 125% Largest 100% Rest	147742VA
	Misc	74436VA	100%	74436VA
			Total Load =	365058 VA
			Total Amps @ 480V/3Ph =	439.00 Amps

FAULT CALCULATIONS

FAULT AVAILABLE AT THE SERVICE:	42000 AMPS RMS SYMM
SERVICE VOLTAGE:	PER UTILITY CHART 480VY/277V, 3PH
PANEL VI	
DISTANCE	312.0 FEET
CONDUIT TYPE	NONCONDUCTIVE
CONDUCTOR	(1) 4/0
IMPEDANCE	6.0000E-05 OHMS/FT
SOURCE IMPEDANCE [$V_{(LN)}$/ISC]	0.006595 OHMS
CONDUCTOR IMPEDANCE ZC = {[(OHMS/FT)XDISTANCE]/PAIRS}	1.8720E-02
FAULT AVAILABLE (V/(ZS + ZC)):	10942.0
PANEL WI	
DISTANCE	600.0 FEET
CONDUIT TYPE	NONCONDUCTIVE
CONDUCTOR	(1) 4/0
IMPEDANCE	6.0000E-05 OHMS/FT
SOURCE IMPEDANCE [$V_{(LN)}$/ISC]	0.006595 OHMS
CONDUCTOR IMPEDANCE ZC = {[(OHMS/FT)XDISTANCE]/PAIRS}	3.6000E-02
FAULT AVAILABLE (V/(ZS + ZC)):	6503.1
PANEL VL	
TRANSFORMER SIZE	112.5 KVA
TRANSFORMER IMPEDANCE	4.0 %
SOURCE IMPEDANCE ZS = [V(LN)/ISC]:	0.025315 OHMS
TRANSFORMER IMPEDANCE ZX = {[(VPXVP)/KVA] X % IMP}	0.082 OHMS
FAULT AVAILABLE = {[V(LN)/(ZS + ZX)] X VP/VS):	5961.0 AMPS
PANEL WL	
TRANSFORMER SIZE	112.5 KVA
TRANSFORMER IMPEDANCE	4.0 %
SOURCE IMPEDANCE ZS = [V(LN)/ISC]:	0.042596 OHMS
TRANSFORMER IMPEDANCE ZX = {[(VPXVP)/KVA] X % IMP}	0.082 OHMS
FAULT AVAILABLE = {[V(LN)/(ZS + ZX)] X VP/VS):	5133.7 AMPS

U.S. DEPARTMENT OF AGRICULTURE
FOREST SERVICE
R-3
SOUTHWESTERN REGION

PolyPhase Engineering
14469 N. 54TH PLACE
SCOTTSDALE, ARIZONA 85254
PHONE: 602-569-0668
FAX: 480-452-0742

DRAFTED BY:	JEC
DESIGNED BY:	JEC
CHECKED BY:	JEC
DRAWING CREATED	5/15/06
PROJECT NUMBER	C06007

DESIGN/DRAWN: JACK CORNELL
CHECKED: JACK CORNELL
FACILITY REVIEW:
UNION REVIEW:
ACCESSIBILITY REVIEW:

Forest: COCONINO NATIONAL FOREST
Project Name: A NEW OFFICE BUILDING FOR THE RED ROCK RANGER DISTRICT

Sheet Title: SCHEMATIC DIAGRAMS CALCULATIONS
Scale: AS SHOWN
Sheet: E4.1

3Ø PANELBOARD SCHEDULE

PANEL W1 VOLTAGE 480/277 PHASES 3 WIRE 4 CB INTERRUPT RATING AMPS 10000

CIRCUIT	DESCRIPTION	CONDUIT	GROUND	PHASE/ NEUTRAL	BREAKER	PANEL LOAD (VA) ØA	ØB	ØC	BREAKER	PHASE/ NEUTRAL	GROUND	CONDUIT	DESCRIPTION	CIRCUIT
1	Lighting	3/4	#12	#12	20/1	1375			20/1				Spare	2
3	Lighting	3/4	#12	#12	20/1		1100		20/1				Spare	4
5	Lighting	3/4	#12	#12	20/1			1200	20/1				Spare	6
7	Lighting	1	#10	#8	40/1	3400			20/1				Spare	8
9	Lighting	3/4	#10	#10	25/1		2340		20/1				Spare	10
11	Lighting	3/4	#12	#12	20/1			1776					Spare	12
13	Mech	3/4	#12	#12	20/1	1920							Spare	14
15	Space												Spare	16
17	Space												Spare	18
19	Space												Spare	20
21	Space												Spare	22
23	Space												Spare	24
25	Space												Panel WL	26
27	Space													28
29	Space													30
31														32
33														34
35														36
37														38
39														40
41														42
	Phase Connected Load					6695	3440	2976						

3Ø PANELBOARD SCHEDULE

PANEL WL VOLTAGE 208/120 PHASES 3 WIRE 4 CB INTERRUPT RATING AMPS 10000

CIRCUIT	DESCRIPTION	CONDUIT	GROUND	PHASE/ NEUTRAL	BREAKER	PANEL LOAD (VA) ØA	ØB	ØC	BREAKER	PHASE/ NEUTRAL	GROUND	CONDUIT	DESCRIPTION	CIRCUIT
1	Misc	1.25	#10	#4	60/1	5100 1200			20/1	#12	#12	3/4	Recepts	2
3	Recepts	3/4	#12	#12	20/1		1074 720		20/1	#12	#12	3/4	Recepts	4
5	Misc	3/4	#12	#12	20/1			1920 360	20/1	#12	#12	3/4	Recepts	6
7	Misc	3/4	#12	#12	20/1	500 510			20/1	#12	#12	3/4	Recepts	8
9	Mech	3/4	#12	#12	20/1		1920 360		20/1	#12	#12	3/4	Recepts	10
11	Misc	3/4	#12	#12	20/1			500 540	20/1	#12	#12	3/4	Recepts	12
13	Spare				20/1	540			20/1	#12	#12	3/4	Recepts	14
15	Spare				20/1		690		20/1	#12	#12	3/4	Recepts	16
17	Spare				20/1			660	20/1	#12	#12	3/4	Recepts	18
19	Spare				20/1	1390			20/1	#12	#12	3/4	Recepts	20
21	Spare				20/1		1080		20/1	#12	#12	3/4	Recepts	22
23	Space							180	20/1	#12	#12	3/4	Recepts	24
25	Space					180			20/1	#12	#12	3/4	Recepts	26
27	Space						180		20/1	#12	#12	3/4	Recepts	28
29	Space							1470	20/1	#12	#12	3/4	Mech	30
31	Mech	3/4	#10	#10	30/3	2520 1150			20/1	#12	#12	3/4	Recepts	32
33				#10			2520 1260		20/1	#12	#12	3/4	Recepts	34
35				#10				2520 180	20/1	#12	#12	3/4	Recepts	36
37	Panel HM					360			20/1	#12	#12	3/4	Recepts	38
39							360		20/1	#12	#12	3/4	Recepts	40
41								360	20/1	#12	#12	3/4	Recepts	42
	Phase Connected Load					13450	10164	8690						

3Ø PANELBOARD SCHEDULE

PANEL ALA VOLTAGE 208/120 PHASES 3 WIRE 4 CB INTERRUPT RATING AMPS 10000

CIRCUIT	DESCRIPTION	CONDUIT	GROUND	PHASE/ NEUTRAL	BREAKER	PANEL LOAD (VA) ØA	ØB	ØC	BREAKER	PHASE/ NEUTRAL	GROUND	CONDUIT	DESCRIPTION	CIRCUIT
1	Recepts	3/4	#12	#12	20/1	950 720			20/1	#12	#12	3/4	Recepts	2
3	Misc	3/4	#12	#12	20/1		750 720		20/1	#12	#12	3/4	Recepts	4
5	Recepts	3/4	#12	#12	20/1			696 720	20/1	#12	#12	3/4	Recepts	6
7	Recepts	3/4	#12	#12	20/1	720 720			20/1	#12	#12	3/4	Recepts	8
9	Recepts	3/4	#12	#12	20/1		720 750		20/1	#12	#12	3/4	Misc	10
11	Recepts	3/4	#12	#12	20/1			900 1920	20/1	#12	#12	3/4	Mech	12
13	Recepts	3/4	#12	#12	20/1	900 1920			20/1	#12	#12	3/4	Mech	14
15	Recepts	3/4	#12	#12	20/1		720 1326		20/1	#12	#12	3/4	Misc	16
17	Recepts	3/4	#12	#12	20/1			540 6564	70/3	#4	#8	1.25	Mech	18
19	Recepts	3/4	#12	#12	20/1	900 6564				#4				20
21	Recepts	3/4	#12	#12	20/1		720 6564			#4				22
23	Recepts	3/4	#12	#12	20/1			720 7008	80/3	#2	#8	1.5	Mech	24
25	Recepts	3/4	#12	#12	20/1	540 7008				#2				26
27	Recepts	3/4	#10	#10	25/1		2130 7008			#2				28
29	Mech	3/4	#12	#12	20/1			1920 4992	60/3	#4	#10	1.25	Mech	30
31	Misc	3/4	#12	#12	20/1	1500 4992				#4				32
33	Recepts	3/4	#12	#12	20/1		870 4992			#4				34
35	Mech	3/4	#12	#12	20/1			1920 1620	20/1	#12	#12	3/4	Misc	36
37	Recepts	3/4	#12	#12	20/1	900							Panel ALB	38
39	Recepts	3/4	#12	#12	20/1		900							40
41														42
	Phase Connected Load					28334	28170	29520						

3Ø PANELBOARD SCHEDULE

PANEL ALB VOLTAGE 208/120 PHASES 3 WIRE 4 CB INTERRUPT RATING AMPS 10000

CIRCUIT	DESCRIPTION	CONDUIT	GROUND	PHASE/ NEUTRAL	BREAKER	PANEL LOAD (VA) ØA	ØB	ØC	BREAKER	PHASE/ NEUTRAL	GROUND	CONDUIT	DESCRIPTION	CIRCUIT
1	Spare					750			20/1	#12	#12	3/4	Misc	2
3	Spare						1920		20/1	#12	#12	3/4	Mech	4
5	Spare							430	20/1	#12	#12	3/4	Misc	6
7	Spare					864			20/1	#12	#12	3/4	Mech	8
9	Spare						1680		20/2	#12	#12	3/4	Mech	10
11	Space							1680		#12				12
13	Space					1000			20/1	#12	#12	3/4	Misc	14
15	Space						500		20/1	#12	#12	3/4	Misc	16
17	Space												Space	18
19	Space												Space	20
21	Space												Space	22
23	Space												Space	24
25	Space												Space	26
27	Space												Space	28
29	Space												Space	30
31														32
33														34
35														36
37														38
39														40
41														42
	Phase Connected Load					2614	4100	2110						

LIGHTING FIXTURE SCHEDULE

PROVIDE FIXTURES AS INDICATED HEREIN AND IN ACCORDANCE WITH SPECIFICATIONS AND GENERAL NOTES

TYPE	MANUFACTURER/ CATALOG #	VOLTS/ INPUT WATTS	LAMPS	MOUNTING	DESCRIPTION / REMARKS
A	COLUMBIA LHR-4-2-54-15-EB5-277-WCB	277V/120W	(2) 54W T5	CHAIN HUNG	1'x4' 2-LAMP FLUORESCENT INDUSTRIAL WITH CROSS BAFFLE
B	DEVINE GFP80-PLT42-ELB	277V/50W	(1) 42W TRITUBE	SURFACE	RECTANGULAR COMPACT FLUORESCENT AREA LIGHT
C	STONCO VWXL-26-HFL-4	277V/30W	(1) 26W TRITUBE	WALL	PROTECTED JELLY JAR FIXTURE.
D	PRESCOLITE LBFT642 TL611 TRIM	277V/30W	(1) 26W TRITUBE	RECESSED	6" DIA LENSED COMPACT FLUORESCENT FIXTURE, WET LOCATIONS SHOWER TRIM, THRU WIRING, ACCESSIBLE FROM BELOW. NON-IC
E	COLUMBIA JT8-24-332-G-FS-8224-EB8-277	277V/108W	32W T8	SURFACE	RECESSED 3-LAMP TROFFER WITH HOLOPHANE LENS.
EM	DUALLITE SL1	277V/20W	INCLUDED 6V T5	SURFACE	EMERGENCY LIGHTING UNIT, TEST SWITCH, AC-ON LIGHT, INTEGRAL BATTERY BACKUP
F	COLUMBIA J14-2-32-F-FS-A12-EB8-277	277V/69W	32W T8	RECESSED GRID	2-LAMP LENSED TROFFER, ELECTRONIC BALLAST, 1'x4', FLANGED.
G	COLUMBIA JT8-22-2-40TT-G-FS-A12-EB8	277V/140W	40W TT	RECESSED	2'x2' LENSED TROFFER, 3-LAMP.
H	PRESCOLITE CFT632EB STCB6ACL	277V/50W	42W G24q-4	RECESSED	6" DIAMETER OPEN DOWNLIGHT.
J	PRESCOLITE CFT632EB STOP6ACL	277V/35W	32W GX24q-3	RECESSED	6" DIAMETER OPEN DOWNLIGHT.
L	PRESCOLITE CFT632EB STF602 WW	277V/35W	32W GX24q-3	RECESSED	6" DIAMETER OPEN WALLWASH DOWNLIGHT.
M	KICHLER 16760BK	120V/400W	(1) 100W (5) 60W	PENDANT	27" DIAMETER ANTIQUE PENDANT FIXTURE.
N	THOMAS LIGHTING FWS-217-8 DSEB	120V/20W	F17T8	SURFACE	25" WALL BRACKET.
SA	CARDCO CULL WING G18-#-Q-250MH-277-BRP	277V/275W	250W MH PULSE START	POLE	POLE MOUNTED AREAL LIGHT, FULL CUTOFF, TYPE V REFLECTOR, WET LOCATIONS.
SB	CARDCO 101-MT-242TRF-BRP	277V/90W	(2) 42 WATT T1 FLUOR.	WALL	TRAPEZOID COMPACT FLUORESCENT WALL PACK, WET LOCATIONS.
SC	ULTRALIGHTS ARCHITECTURAL LTG 9707	277V/45W	(1) 36 WATT CFL	WALL	WET LOCATIONS CYLINDER WITH UP/DOWN DISTRIBUTION
X	DUALLITE LE-W-S-G-X-W-E	277V/20W	GREEN LED	WALL	EMERGENCY EXIT SIGN WITH INTEGRAL NI-CAD BATTERY BACKUP, ACRYLIC PLAQUE.

PROVIDING FIXTURES USING THE MANUFACTURER AND CATALOG NUMBER AS IDENTIFIED ABOVE DOES NOT RELIEVE THE CONTRACTOR OF THE RESPONSIBILITY TO VERIFY THE FIXTURES COMPLY WITH THE SPECIFICATIONS, GENERAL NOTES, AND REQUIREMENTS OF INSTALLATION.

THE CONTRACTOR SHALL NOTIFY THE ENGINEER, PRIOR TO PURCHASE, OF ANY CONFLICTS BETWEEN THE FIXTURES AS SPECIFIED ABOVE AND OTHER REQUIREMENTS IN THE DRAWINGS OR SPECIFICATIONS.

ALL FLUORESCENT LAMPS SHALL BE COLOR TEMPERATURE 35K.

3Ø PANELBOARD SCHEDULE

PANEL A1 VOLTAGE 480/277 PHASES 3 WIRE 4 CB INTERRUPT RATING AMPS 10000

CIRCUIT	DESCRIPTION	CONDUIT	GROUND	PHASE/ NEUTRAL	BREAKER	PANEL LOAD (VA) ØA	ØB	ØC	BREAKER	PHASE/ NEUTRAL	GROUND	CONDUIT	DESCRIPTION	CIRCUIT
1	Lighting	3/4	#12	#12	20/1	1460 1790			20/1	#12	#12	3/4	Lighting	2
3	Lighting	3/4	#12	#12	20/1		1100 4087		45/1	#6	#10	1	Lighting	4
5	Lighting	3/4	#12	#12	20/1			1100 3574	40/1	#8	#10	1	Lighting	6
7	Lighting	3/4	#12	#12	20/1	1100 2676			30/1	#10	#10	3/4	Lighting	8
9	Spare				20/1		3186		35/1	#8	#10	1	Lighting	10
11	Spare				20/1			3652	40/1	#8	#10	1	Lighting	12
13	Spare				20/1	1817			20/1	#12	#12	3/4	Lighting	14
15	Spare				20/1								Space	16
17	Spare				20/1								Space	18
19	Space												Space	20
21	Space												Space	22
23	Space												Space	24
25	Space												Panel AL	26
27	Space													28
29	Space													30
31														32
33														34
35														36
37														38
39														40
41														42
	Phase Connected Load					8843	8373	8326						

3Ø PANELBOARD SCHEDULE

PANEL AL VOLTAGE 208/120 PHASES 3 WIRE 4 CB INTERRUPT RATING AMPS 10000

CIRCUIT	DESCRIPTION	CONDUIT	GROUND	PHASE/ NEUTRAL	BREAKER	PANEL LOAD (VA) ØA	ØB	ØC	BREAKER	PHASE/ NEUTRAL	GROUND	CONDUIT	DESCRIPTION	CIRCUIT
1	Recepts	3/4	#12	#12	20/1	720 720			20/1	#12	#12	3/4	Recepts	2
3	Recepts	3/4	#12	#12	20/1		360 1080		20/1	#12	#12	3/4	Recepts	4
5	Recepts	3/4	#12	#12	20/1			360 900	20/1	#12	#12	3/4	Recepts	6
7	Recepts	3/4	#12	#12	20/1	1670 1230			20/1	#12	#12	3/4	Recepts	8
9	Recepts	3/4	#12	#12	20/1		696 1500		20/1	#12	#12	3/4	Misc	10
11	Recepts	3/4	#12	#12	20/1			900 1864	20/1	#12	#12	3/4	Mech	12
13	Misc	3/4	#12	#12	20/1	750 540			20/1	#12	#12	3/4	Recepts	14
15	Recepts	3/4	#12	#12	20/1		360 1180		20/1	#12	#12	3/4	Recepts	16
17	Recepts	3/4	#12	#12	20/1			720 720	20/1	#12	#12	3/4	Recepts	18
19	Recepts	3/4	#12	#12	20/1	720 1620			20/1	#12	#12	3/4	Misc	20
21	Recepts	3/4	#12	#12	20/1		720 1920		20/1	#12	#12	3/4	Lighting	22
23	Recepts	3/4	#12	#12	20/1			1080 720	20/1	#12	#12	3/4	Recepts	24
25	Recepts	3/4	#12	#12	20/1	540 1080			20/1	#12	#12	3/4	Recepts	26
27	Recepts	3/4	#12	#12	20/1		750 540		20/1	#12	#12	3/4	Recepts	28
29	Recepts	3/4	#12	#12	20/1			360 720	20/1	#12	#12	3/4	Recepts	30
31	Recepts	3/4	#12	#12	20/1	1200 720			20/1	#12	#12	3/4	Recepts	32
33	Recepts	3/4	#12	#12	20/1		360 540		20/1	#12	#12	3/4	Recepts	34
35	Recepts	3/4	#12	#12	20/1			900 900	20/1	#12	#12	3/4	Recepts	36
37	Recepts	3/4	#12	#12	20/1	900 1920			20/1	#12	#12	3/4	Mech	38
39	Recepts	3/4	#12	#12	20/1		1440 720		20/1	#12	#12	3/4	Recepts	40
41	Recepts	3/4	#12	#12	20/1			1800 1260	20/1	#12	#12	3/4	Recepts	42
	Phase Connected Load					14330	12166	13204						

3Ø PANELBOARD SCHEDULE

PANEL VL VOLTAGE 208/120 PHASES 3 WIRE 4 CB INTERRUPT RATING AMPS 10000

CIRCUIT	DESCRIPTION	CONDUIT	GROUND	PHASE/ NEUTRAL	BREAKER	PANEL LOAD (VA) ØA	ØB	ØC	BREAKER	PHASE/ NEUTRAL	GROUND	CONDUIT	DESCRIPTION	CIRCUIT
1	Recepts	3/4	#12	#12	20/1	360 4992			60/3	#4	#10	1.25	Mech	2
3	Recepts	3/4	#12	#12	20/1		360 4992			#4				4
5	Recepts	3/4	#12	#12	20/1			360 4992		#4				6
7	Misc	3/4	#12	#12	20/1	1500 4992			60/3	#4	#10	1.25	Mech	8
9	Mech	3/4	#12	#12	20/1		1920 4992			#4				10
11	Mech	3/4	#12	#12	20/1			1920 4992		#4				12
13	Recepts	3/4	#12	#12	20/1	1080 3588			40/3	#8	#10	1	Mech	14
15	Recepts	3/4	#12	#12	20/1		720 3588			#8				16
17	Recepts	3/4	#12	#12	20/1			720 3588		#8				18
19	Recepts	3/4	#12	#12	20/1	1490 1260			20/1	#12	#12	3/4	Recepts	20
21	Mech	3/4	#12	#12	20/1		1176 360		20/1	#12	#12	3/4	Recepts	22
23	Recepts	3/4	#12	#12	20/1			729 540	20/1	#12	#12	3/4	Recepts	24
25	Recepts	3/4	#12	#12	20/1	1860 360			20/1	#12	#12	3/4	Recepts	26
27	Recepts	3/4	#12	#12	20/1		1080 360		20/1	#12	#12	3/4	Recepts	28
29	Recepts	3/4	#12	#12	20/1			1080 360	20/1	#12	#12	3/4	Recepts	30
31	Recepts	3/4	#12	#12	20/1	1080 180			20/1	#12	#12	3/4	Recepts	32
33	Mech	3/4	#12	#12	20/1		1920 180		20/1	#12	#12	3/4	Recepts	34
35	Mech	3/4	#12	#12	20/1			1920 1050	20/1	#12	#12	3/4	Misc	36
37	Misc	3/4	#10	#10	25/1	2000 1500			20/1	#12	#12	3/4	Misc	38
39	Recepts	3/4	#12	#12	20/1		870 864		20/1	#12	#12	3/4	Mech	40
41	Recepts	3/4	#12	#12	20/1			1620					Space	42
	Phase Connected Load					26242	23382	23871						

U.S. DEPARTMENT OF AGRICULTURE
FOREST SERVICE
R-3
SOUTHWESTERN REGION

PolyPhase Engineering
14469 N. 54TH PLACE
SCOTTSDALE, ARIZONA 85254
PHONE: 602-569-0668
FAX: 480-452-0742

DRAFTED BY:	JEC
DESIGNED BY:	JEC
CHECKED BY:	JEC
DRAWING CREATED	5/15/06
PROJECT NUMBER	C06007

DESIGN/DRAWN: JACK CORNELL
CHECKED: JACK CORNELL
FACILITY REVIEW:
UNION REVIEW:
ACCESSIBILITY REVIEW:

Forest: COCONINO NATIONAL FOREST

Project Name: A NEW OFFICE BUILDING FOR THE RED ROCK RANGER DISTRICT

Sheet Title: EQUIPMENT SCHEDULES

Scale: AS SHOWN

Sheet: E4.2

3Ø PANELBOARD SCHEDULE

PANEL V1 VOLTAGE 480/277 PHASES 3 WIRE 4 CB INTERRUPT RATING 10000 AMPS

CIRCUIT	DESCRIPTION	CONDUIT	GROUND	PHASE/ NEUTRAL	BREAKER	PANEL LOAD (VA) øA	øB	øC	BREAKER	PHASE/ NEUTRAL	GROUND	CONDUIT	DESCRIPTION	CIRCUIT
1	Spare				20/1	400			20/1	#12	#12	3/4	Lighting	2
3	Spare				20/1		950		20/1	#12	#12	3/4	Lighting	4
5	Spare				20/1			2436	30/1	#10	#10	3/4	Lighting	6
7	Spare				20/1	1760			35/1	#8	#10	1	Lighting	8
9	Spare				20/1		2115		25/1	#10	#10	3/4	Lighting	10
11	Space												Space	12
13	Space												Space	14
15	Space												Space	16
17	Space												Space	18
19	Space												Space	20
21	Space												Space	22
23	Space												Space	24
25	Space												Panel VL	26
27	Space													28
29	Space													30
31														32
33														34
35														36
37														38
39														40
41														42
	Phase Connected Load					2160	3065	2436						

3Ø PANELBOARD SCHEDULE

PANEL VLA VOLTAGE 208/120 PHASES 3 WIRE 4 CB INTERRUPT RATING 10000 AMPS

CIRCUIT	DESCRIPTION	CONDUIT	GROUND	PHASE/ NEUTRAL	BREAKER	PANEL LOAD (VA) øA	øB	øC	BREAKER	PHASE/ NEUTRAL	GROUND	CONDUIT	DESCRIPTION	CIRCUIT
1	Lighting	3/4	#12	#12	20/1	1680 1620			20/1	#12	#12	3/4	Misc	2
3	Lighting	3/4	#12	#12	20/1		1680 1320		20/1	#12	#12	3/4	Mech	4
5	Lighting	3/4	#12	#12	20/1			1180 1320	20/2	#12	#12	3/4	Mech	6
7	Spare				20/1	1320				#12				8
9	Spare				20/1		1920		20/2	#12	#12	3/4	Mech	10
11	Space							750		#12			Misc	12
13	Space					500			20/1	#12	#12	3/4	Misc	14
15	Space												Space	16
17	Space												Space	18
19	Space												Space	20
21	Space												Space	22
23	Space												Space	24
25	Space												Space	26
27	Space												Space	28
29	Space												Space	30
31														32
33														34
35														36
37														38
39														40
41														42
	Phase Connected Load					5120	4920	3250						

U.S. DEPARTMENT OF AGRICULTURE
FOREST SERVICE
R-3
SOUTHWESTERN REGION

PolyPhase Engineering
14469 N. 54TH PLACE
SCOTTSDALE, ARIZONA 85254
PHONE: 602-569-0668
FAX: 480-452-0742

DRAFTED BY:	JEC
DESIGNED BY:	JEC
CHECKED BY:	JEC
DRAWING CREATED	5/15/06
PROJECT NUMBER	C06007

DESIGN/DRAWN: JACK CORNELL
CHECKED: JACK CORNELL
FACILITY REVIEW:
UNION REVIEW:
ACCESSIBILITY REVIEW:

Forest: COCONINO NATIONAL FOREST

Project Name: A NEW OFFICE BUILDING FOR THE RED ROCK RANGER DISTRICT

Sheet Title: EQUIPMENT SCHEDULES

Scale: AS SHOWN

Sheet: E4.3

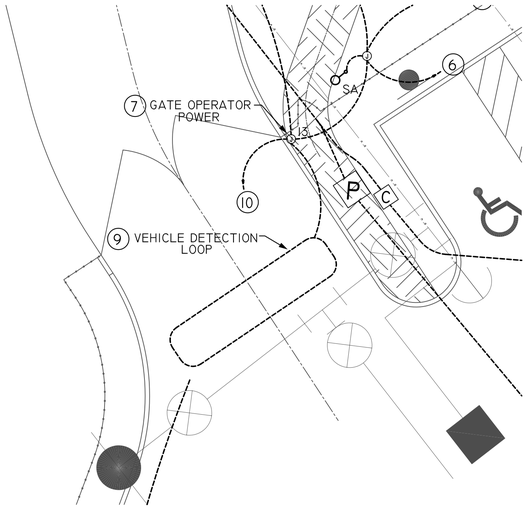

C AUTOMATIC GATE INSTALLATION
DETAIL SCALE: 1/8"=1'0"

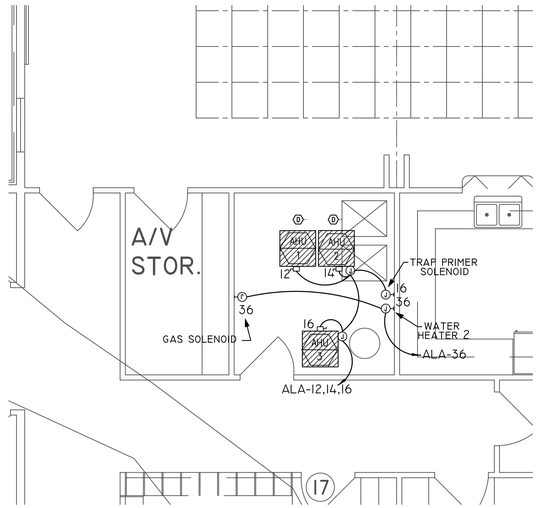

F ENLARGED MECHANICAL ROOM
PLAN SCALE: 1/4"=1'-0"

KEYED NOTES

1. 18" WIDE CABLE TRAY MOUNTED AT THE SAME HEIGHT AS CABLE TRAY IN THE HALLWAY OUTSIDE THE COMMUNICATIONS ROOM.
2. UTILITY COMPANY SPLICE BOX (EXTERIOR TO INTERIOR CABLE).
3. TYPE 66 PUNCHDOWN BLOCKS (50 PAIR) FOR UTILITY COMPANY USE.
4. 19" EQUIPMENT RACK FOR FIELD AND STATION PUNCHDOWN BLOCK AND TELCO EQUIPMENT MOUNTING.
5. COORDINATE THE EQUIPMENT LAYOUT IN THIS ROOM WITH THE OWNER'S REPRESENTATIVE PRIOR TO ROUGH-IN OF ANY EQUIPMENT.
6. SEE THE SITE PLAN, SHEET E0.2, FOR CONTINUATION OF THIS CONDUIT
7. PROVIDE POWER TO THE GATE CONTROLLER FROM THE CIRCUITS INDICATED. VERIFY THE GATE OPERATOR ELECTRICAL REQUIREMENTS WITH THE ARCHITECTURAL DRAWINGS PRIOR TO TRENCHING.
8. INSTALL A 1" EMPTY CONDUIT, WITH PULL CORD, FROM THE GATE OPERATOR TO THE POST-MOUNTED KEYPAD. THE KEYPAD SHALL BE MOUNTED ON A SQUARE POST AT 42" AFG (VERIFY WITH THE CONTRACTING OFFICER) IMMEDIATELY ADJACENT TO THE DRIVE EDGE AS SHOWN. THE KEYPAD SHALL BE A STANDARD PRODUCT OF THE GATE OPERATOR MANUFACTURER, AS APPROVED BY THE CONTRACTING OFFICER.
9. PROVIDE AN IN-GROUND VEHICLE DETECTION LOOP, CONNECTED TO OPEN THE GATE FOR EXITING VEHICLES. THE LOOP SHALL BE A STANDARD PRODUCT OF THE GATE OPERATOR MANUFACTURER, AS APPROVED BY THE CONTRACTING OFFICER, INSTALLED AS REQUIRED BY THE MANUFACTURER.
10. PROVIDE A 1" CONDUIT TO THE ENGINE BAY, AS SHOWN ON THE WAREHOUSE SPECIAL SYSTEMS PLAN, FOR A REMOTE GATE OPERATOR SWITCH. THE SWITCH SHALL BE A STANDARD PRODUCT OF THE GATE OPERATOR AND SHALL BE CONNECTED TO ALLOW THE GATE TO BE OPENED OR CLOSED FROM THE ENGINE BAY.

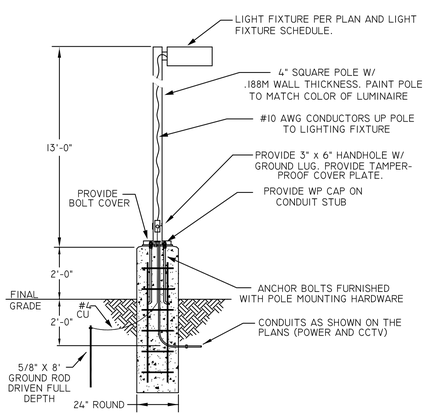

NOTE: THE POLE MANUFACTURER SHALL PROVIDE A POLE BASE DESIGN FOR 100MPH WIND LOADING WITH A 1.3 GUST FACTOR. THE POLE BASE DESIGN SHALL BE FROM A STRUCTURAL ENGINEER REGISTERED IN THE STATE OF ARIZONA. THE STRUCTURAL ENGINEER SHALL VERIFY THE WIND LOADING AND GUST FACTOR CRITERIA ABOVE ARE ADEQUATE FOR THE AREA OF INSTALLATION.

SEE ARCHITECTURAL DRAWINGS FOR ADDITIONAL POLE BASE INFORMATION.

A TYPICAL POLE BASE
DETAIL SCALE: NONE

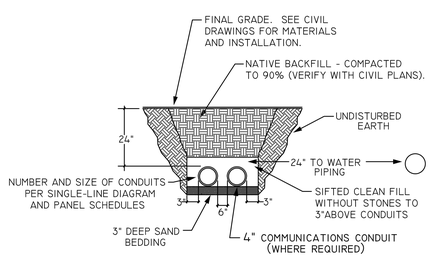

B TYPICAL ELECTRICAL TRENCH
SECTION SCALE: NONE

FACEPLATES SHALL MEET ALL REQUIREMENTS OF THE FOREST SERVICE VOICE AND DATA WIRING SYSTEM SPECIFICATIONS SECTION 2.07,C,3.

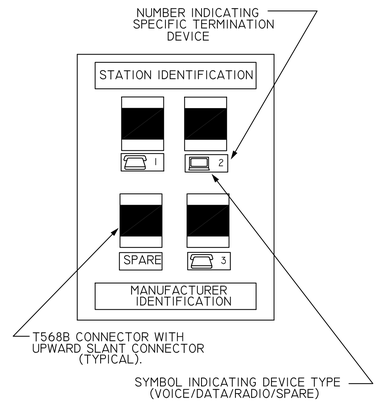

J TYPICAL STATION FACEPLATE
SECTION SCALE: NONE

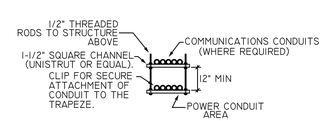

G TYPICAL CONDUIT TRAPEEZE
SECTION SCALE: NONE

ALL COMMUNICATIONS ROOM DETAILS AND EQUIPMENT SHALL MEET ALL REQUIREMENTS OF FOREST SERVICE VOICE AND DATA SYSTEM WIRING SYSTEM SPECIFICATIONS.

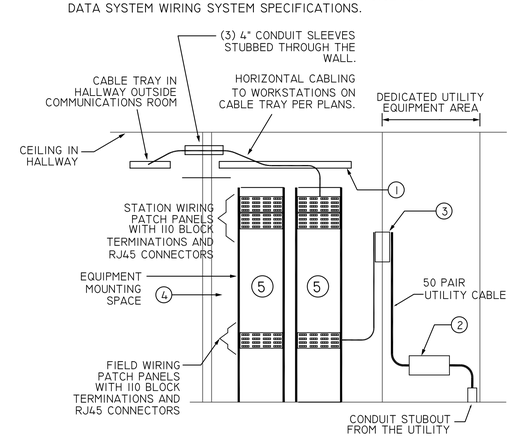

H COMMUNICATIONS ROOM
DETAIL SCALE: NONE

U.S. DEPARTMENT OF AGRICULTURE
FOREST SERVICE
R-3
SOUTHWESTERN REGION

PolyPhase Engineering
14469 N. 54TH PLACE
SCOTTSDALE, ARIZONA 85254
PHONE: 602-569-0668
FAX: 480-452-0742

DRAFTED BY:	JEC
DESIGNED BY:	JEC
CHECKED BY:	JEC
DRAWING CREATED	5/15/06
PROJECT NUMBER	C06007

DESIGN/DRAWN:	JACK CORNELL
CHECKED:	JACK CORNELL
FACILITY REVIEW:	
UNION REVIEW:	
ACCESSIBILITY REVIEW:	

Forest: COCONINO NATIONAL FOREST

Project Name: A NEW OFFICE BUILDING FOR THE RED ROCK RANGER DISTRICT

Sheet Title: INSTALLATION DETAILS

Scale: AS SHOWN

Sheet: E5.1

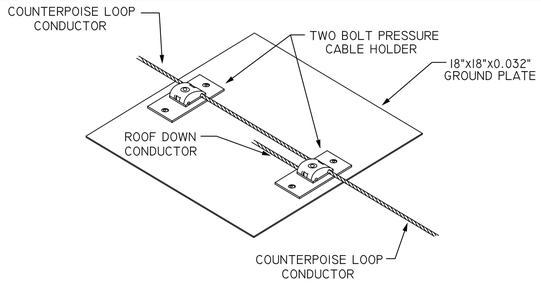

D GROUND PLATE CONNECTION
INSTALLATION DETAIL
SCALE: NONE

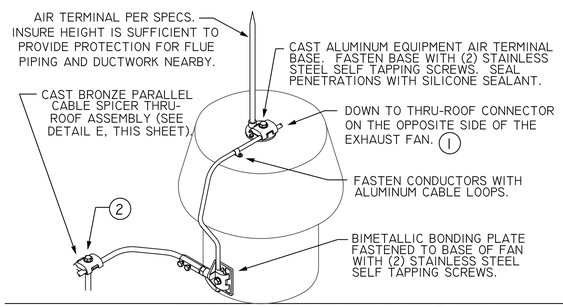

C EXHAUST FAN BONDING
DETAIL
SCALE: NONE

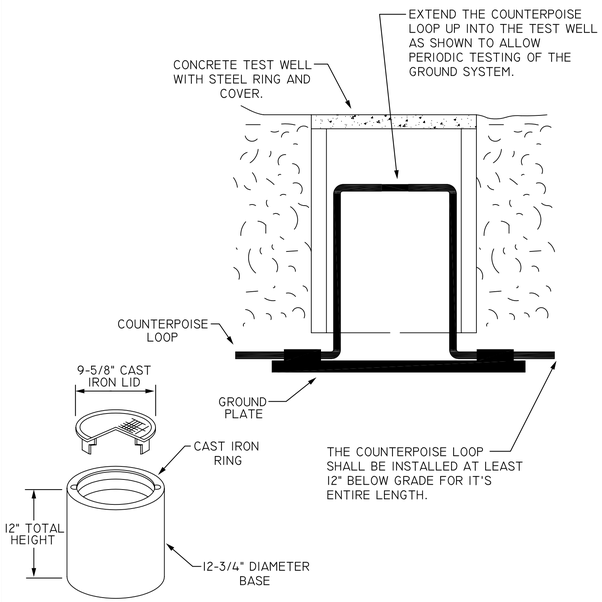

F GROUND TEST WELL
INSTALLATION DETAIL
SCALE: NONE

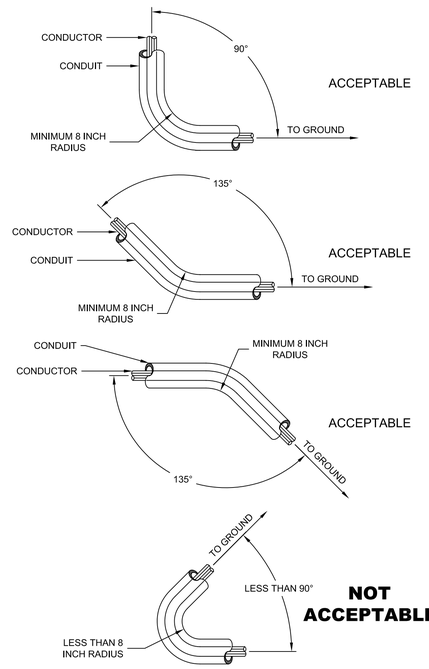

H CABLE INSTALLATION LIMITS
INSTRUCTIONS
SCALE: NTS

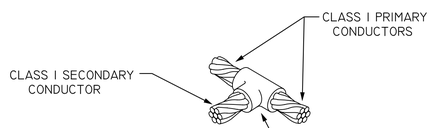

B EXOTHERMIC WELD CONNECTOR
DETAIL
SCALE: NONE

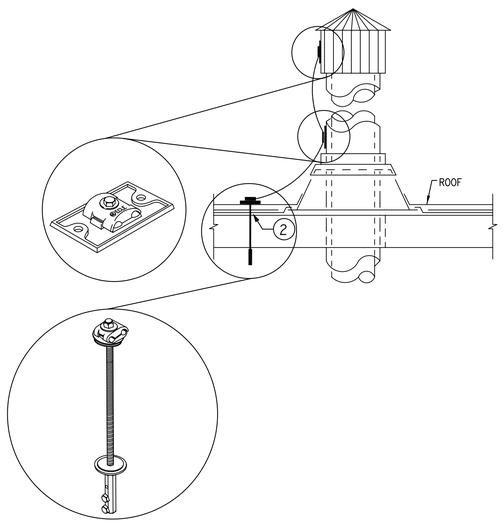

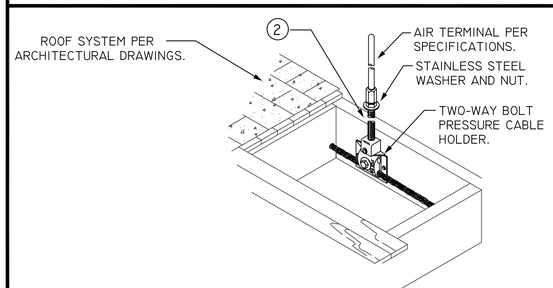

G THRU-ROOF AIR TERMINAL
INSTALLATION DETAIL
SCALE: NONE

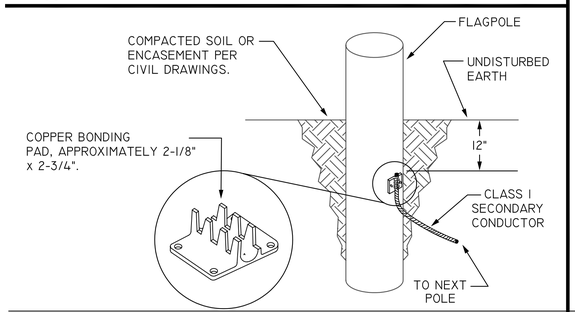

A FLAGPOLE BONDING
DETAIL
SCALE: NONE

E FLUE AIR TERMINAL
INSTALLATION DETAIL
SCALE: NONE

U.S. DEPARTMENT OF AGRICULTURE
FOREST SERVICE
R-3
SOUTHWESTERN REGION

PolyPhase Engineering
14449 N. 56TH PLACE
SCOTTSDALE, ARIZONA 85254
PHONE: 602-569-0668
FAX: 480-452-0742

DRAFTED BY:	JEC
DESIGNED BY:	JEC
CHECKED BY:	JEC
DRAWING CREATED	5/15/06
PROJECT NUMBER	C06007

DESIGN/DRAWN: JACK CORNELL
CHECKED: JACK CORNELL
FACILITY REVIEW:
UNION REVIEW:
ACCESSIBILITY REVIEW:

Forest: COCONINO NATIONAL FOREST
Project Name: A NEW OFFICE BUILDING FOR THE RED ROCK RANGER DISTRICT

Sheet Title: INSTALLATION DETAILS
Scale: AS SHOWN
Sheet: E5.2