GENERAL:

1. THESE CONSTRUCTION DOCUMENTS ARE CONSTRUCTION STANDARDS FOR THE NAVY CLWS DOUBLE BAY STANDARD MAGAZINES AND HAVE BEEN SITE ADAPTED BY THE DOR.

2. ALL MATERIALS AND WORKMANSHIP MUST CONFORM TO THE DRAWINGS AND SPECIFICATIONS.

3. EQUIPMENT PENETRATION OPENINGS AND LOCATIONS WHEN INDICATED ON DRAWINGS ARE FOR INFORMATION ONLY AND MUST BE VERIFIED WITH THE APPROPRIATE DRAWING AND/OR EQUIPMENT SUPPLIER BEFORE CONSTRUCTION.
   - A. SEE STRUCTURAL AND ELECTRICAL DRAWINGS FOR SIZE AND LOCATION OF ALL OPENINGS REQUIRED FOR DUCT WORK, PIPES AND PIPE SLEEVES.
   - B. OPENINGS OR POCKETS LARGER THAN 6 INCHES NOT INDICATED IN STRUCTURAL DRAWINGS MUST NOT BE PLACED WITHOUT WRITTEN NOTIFICATION OF THE CONTRACTING OFFICER.
   - C. OPENINGS OR PENETRATIONS OF ANY SIZE IN BLAST–RESISTING STRUCTURAL COMPONENTS (BLAST DOOR, HEADER BEAM, HEADWALL, PILASTERS, INFILL WALLS, ROOF PANEL, SIDE WALLS, REAR WALL) THAT ARE UNPLANNED OR NOT SHOWN IN THE DRAWINGS ARE NOT PERMITTED TO BE CONSTRUCTED WITHOUT PRIOR APPROVAL FROM THE CONTRACTING OFFICER.

4. THE STRUCTURAL DRAWINGS SHOW ONLY THE BASIC STRUCTURAL SYSTEM. REFER TO OTHER DRAWINGS FOR ORNAMENTS, GROOVES, CLIPS, GROUNDS, SLAB DEPRESSIONS, CURBS, EQUIPMENT PADS, PENETRATIONS, NON–BEARING WALLS AND OTHER NON–STRUCTURAL ITEMS.

5. GENERAL NOTES AND STANDARD DETAILS MUST BE USED WHERE APPLICABLE, UNLESS NOTED OTHERWISE. NOTES AND DETAILS ON THE DRAWINGS MUST TAKE PRECEDENCE OVER GENERAL NOTES AND STANDARD DETAILS. WHERE CONFLICTS ARISE BETWEEN DRAWINGS AND SPECIFICATIONS, MOST STRINGENT WILL GOVERN. CONTACT THE CONTRACTING OFFICER IN WRITING FOR CLARIFICATION BEFORE PROCEEDING WITH WORK.

6. ALL OMISSIONS AND/OR CONFLICTS BETWEEN VARIOUS ELEMENTS OF THE CONTRACT DOCUMENTS MUST BE BROUGHT TO THE ATTENTION OF THE CONTRACTING OFFICER IN WRITING BEFORE PROCEEDING WITH ANY WORK INVOLVED.

7. DIMENSIONS MUST NOT BE SCALED FROM THE PLANS, SECTIONS AND/OR DETAILS OF THE STRUCTURAL DRAWINGS.

8. COORDINATE WITH THE CONTRACTING OFFICER FOR PROCUREMENT AND INSTALLATION OF INTERNAL LOCKING DEVICE (ILD), BOLTWORKS, AND THE DISTRIBUTION OF KEY SETS FOR EACH MAGAZINE DOOR. THE ILD MUST BE PROCURED WITH TWO UNIQUE KEYS IN ORDER TO OPERATE THE BOLTWORKS.

9. CONTACT THE DoD LOCK PROGRAM FOR DIRECTIONS ON HOW TO PROCURE THE INTERNAL LOCKING DEVICE (ILD), BOLTWORKS, AND A LIST OF RECOMMENDED MANUFACTURERS FOR MAGAZINE DOORS:
   - A. DoD LOCK PROGRAM: https://www.navfac.navy.mil/go/locks
   - B. EMAIL: ILD_Field_Support@navy.mil
   - C. ILD SUPPORT HOTLINE: 805–982–5625.
   - D. DoD LOCK PROGRAM TECHNICAL SUPPORT HOTLINE: 800–290–7607 OR 805–982–1212.

10. COORDINATE WITH THE CONTRACTING OFFICER FOR THE CONNECTION OF THE BALANCED MAGNETIC SWITCH (BMS) ON THE DOOR AND THE ILD, WHICH MUST BE INSTALLED AND CONNECTED TO THE INTRUSION DETECTION SYSTEM (IDS) BY NAVAL INFORMATION WARFARE CENTER.

DESIGN CRITERIA:

1. THE STRUCTURAL DESIGN AND CONSTRUCTION MUST COMPLY WITH THE FOLLOWING GOVERNMENT STANDARDS:
   - UFC 1–200–01, "DESIGN: GENERAL BUILDING REQUIREMENTS"
   - FC 1–300–09N, "NAVY AND MARINE CORPS DESIGN PROCEDURES"

2. DESIGN LOADS:
   THE FOLLOWING LOADS WERE USED AS BASIS OF DESIGN:
   - A. DEAD LOADS: ACTUAL WEIGHT
     - a. SOIL: 110–120 PCF
   - B. LIVE LOADS:
     - a. CANOPY ROOF: 20 PSF
     - b. ROOF: 100 PSF
     - c. MAGAZINE FLOOR: 32K (HS 20–44 AXLE)
       70.5K (SIDELOADER AXLE)
       15K (FORKLIFT AXLE)
       32K (CPS CONTAINER EACH)
       2 STACKED CONTAINERS
       1 IN CONCURRENCE WITH SIDE–LOADER
       1,250 PSF (UNIFORM)
     - d. MECHANICAL ROOM FLOOR: 150 PSF (UNIFORM)

3. WIND DESIGN DATA:
   - A. DESIGN WIND SPEED: 210 MPH
   - B. WIND SPEED (ALLOWABLE STRESS DESIGN): 163 MPH
   - C. EXPOSURE: "C"
   - D. RISK CATEGORY: III

4. SEISMIC DESIGN DATA:
   - A. RISK CATEGORY: III
   - B. IMPORTANCE FACTOR: 1.25
   - C. SEISMIC DESIGN CATEGORY: D
   - D. SITE SEISMICITY: S_S = 2.79g
     S_1 = 0.68g
   - E. SITE CLASS: D

DESIGN CRITERIA (CONT.)

5. SNOW DESIGN DATA:
   - A. GROUND SNOW LOAD: 45 PSF
   - B. EXPOSURE FACTOR: 1.0
   - C. IMPORTANCE FACTOR: 1.10
   - D. THERMAL FACTOR: 1.2

6. EXPLOSIVES SAFETY DESIGN LOADS:
   - A. EXPLOSIVES SAFETY DESIGN LOADS FOR DOOR AND ROOF OF MAGAZINES ARE PRESCRIBED BY NAVFAC EXWC. DESIGN GUIDANCE IS PROVIDED BY UFC 3–340–02 2008.
   - B. TRIANGULAR PULSE LOAD VALUES BASED ON NAVFAC EXWC TECHNICAL REPORT TR–NAVFAC EXWC–SH–2202, BASIS OF DESIGN FOR EXPLOSIVE SAFETY FOR UPDATED TO NAVY TYPE C AND TYPE D EARTH–COVERED MAGAZINES AND NAVY MODULAR MAGAZINE, DATED SEPTEMBER 2021:

MEMBER	PEAK PRESSURE	IMPULSE	DURATION
HEAD WALL AND DOOR	249 PSI	2,084 PSI–MS	16.7 MS
ROOF	142 PSI	1,626 PSI–MS	22.9 MS

   - C. APPROVED LOCATION AND STORAGE CAPACITY OF EACH ECM MUST BE DETERMINED BY THE SAFETY OFFICER BASED ON ORIENTATION AND PROXIMITY RELATIVE TO NEARBY FACILITIES/MAGAZINES.

CONSTRUCTION PROCEDURES & SAFETY REQUIREMENTS:

1. THE CONTRACT STRUCTURAL DRAWINGS REPRESENT THE FINISHED STRUCTURE. THEY DO NOT INDICATE THE MEANS OR METHOD OF CONSTRUCTION. PROVIDE ALL MEASURES NECESSARY TO PROTECT THE STRUCTURE, WORKERS OR OTHER PERSONS DURING CONSTRUCTION. SUCH MEASURES MUST INCLUDE, BUT NOT BE LIMITED TO, BRACING, SHORING FOR CONSTRUCTION EQUIPMENT, SHORING FOR THE BUILDING, FORMS, SCAFFOLDING, PLANKING, SAFETY NETS, ETC.

2. THE CONTRACTOR MUST ENGAGE PROPERLY QUALIFIED PERSONS TO DETERMINE WHERE AND HOW TEMPORARY PRECAUTIONARY MEASURES MUST BE USED DURING CONSTRUCTION. THE CONTRACTOR MUST ALSO PROVIDE THEIR OWN THIRD–PARTY INSPECTOR TO REVIEW AND VERIFY INSTALLATION OF ALL TEMPORARY PRECAUTIONARY MEASURES.

3. THE CONTRACTOR MUST SUPERVISE AND DIRECT THE WORK SO AS TO MAINTAIN RESPONSIBILITY FOR COORDINATING THE WORK OF ALL TRADES AND THE CHECKING OF ALL DIMENSIONS. ALL DISCREPANCIES MUST BE CALLED TO THE ATTENTION OF THE CONTRACTING OFFICER AND MUST BE RESOLVED BEFORE PROCEEDING WITH THE WORK.

4. THE CONTRACTOR MUST COMPLY WITH ALL APPLICABLE CITY, COUNTY, STATE, FEDERAL, AND INTERNATIONAL LAWS, INCLUDING THE OCCUPATIONAL SAFETY AND HEALTH ACT (OSHA) AND REGULATIONS ADOPTED PURSUANT THERETO.

5. CONSTRUCTION LOADS INCLUDING MATERIALS MUST NOT EXCEED THE DESIGN LIVE LOAD. PROVIDE ADEQUATE SHORING, RESHORING AND/OR BRACING WHERE REQUIRED.

FOUNDATIONS:

1. THE FOUNDATIONS HAVE BEEN DESIGNED USING THE FOLLOWING ALLOWABLE BEARING PRESSURES:
   - A. DEAD PLUS LIVE LOAD: 4,000 PSF
   - B. TOTAL DESIGN LOAD (INCLUDING WIND OR SEISMIC, TRANSIENT LOAD FACTOR = 1.33): 5,300 PSF
   - C. BLAST DESIGN LOAD (DYNAMIC INCREASE FACTOR = 2.5): 10,000 PSF

2. EARTH COVER MATERIAL TO BE USED AS MAGAZINE COVER AND WITHIN THE EMBANKMENT IS TO BE NON–EXPANSIVE, FREE OF DELETERIOUS MATERIAL AND MEET THE FOLLOWING CHARACTERISTICS:
   - A. ALLOWABLE SOIL COMPACTED DRY DENSITY (SITE SPECIFIC): 110–125 PCF.
   - B. ASTM D2487 CLASSIFICATION: SM, SM–SC, SC.
   - C. ASTM D1140 MATERIAL FINER THAN #200 SIEVE (0.075MM) –MIN. 25%: MAX. 50%.
   - D. MAXIMUM PARTICLE SIZE: 1 INCH
   - E. ASTM D4318: MAX LIQUID LIMIT = 35, MAX PLASTICITY INDEX = 12.
   - F. REQUIREMENTS FOR EARTH COVER ECMS IN ACCORDANCE WITH DEFENSE EXPLOSIVES SAFETY REGULATION (DESR) 6055.09.

3. RETAINING WALLS HAVE BEEN DESIGNED USING THE FOLLOWING CRITERIA.
   - A. PASSIVE EQUIVALENT FLUID PRESSURE: 300 PSF/FT
   - B. AT–REST LATERAL PRESSURE WITH/ 2:1 BACKFILL (RESTRAINED):
     - WITHOUT SEISMIC: 32 PSF/ FT
     - WITH SEISMIC: 68 PSF/ FT
   - C. CANTILEVERED WALL LATERAL PRESSURE (UNRESTRAINED):
     - WITHOUT SEISMIC: 40 PSF/ FT
     - WITH SEISMIC: 102 PSF/ FT
   - D. FRICTION FACTOR BETWEEN SOIL AND CONCRETE PLACED AGAINST SOIL: 0.35
   - E. FRICTION FACTOR BETWEEN SOIL AND CONCRETE PLACED AGAINST FORMWORK: 0.25
   - F. MINIMUM SOIL COHESIVE STRENGTH: 500 PSF

4. SAND MATERIAL USED AS A FREE–DRAINING LAYER AT THE EXTERIOR CONCRETE SURFACES AT THE ROOF PANEL, ENDWALL, AND SIDEWALLS MUST MEET MINIMUM REQUIREMENTS FOR ECMS IN ACCORDANCE WITH DEFENSE EXPLOSIVES SAFETY REGULATION (DESR) 6055.09. (SITE SPECIFIC – ASTM C33)

5. STRUCTURAL DRAWINGS INDICATE GENERAL SLAB ON GRADE AND FOUNDATION PREPARATION. SEE PROJECT SPECIFICATIONS FOR SPECIFIC REQUIREMENTS.

FOUNDATIONS (CONT.):

6. ALL FILLING, BACKFILLING AND COMPACTING MUST BE PER PROJECT SPECIFICATION. COMPACTION OF SOILS ON TOP OF MAGAZINE MUST BE PERFORMED WITH HAND COMPACTION TOOLS ONLY.

7. EXPANSIVE SOILS MUST NOT BE USED FOR BACKFILL OR FILL. BACKFILL AT RETAINING WALLS MUST CONFORM TO THE PROJECT SPECIFICATIONS.

8. ALL EXCAVATIONS MUST BE PROPERLY BACKFILLED. DO NOT PLACE BACKFILL BEHIND RETAINING WALLS BEFORE CONCRETE HAS ATTAINED FULL DESIGN STRENGTH. CONTRACTOR MUST BRACE OR PROTECT ALL BUILDING AND PIT WALLS BELOW GRADE FROM LATERAL LOADS UNTIL ATTACHING FLOORS ARE COMPLETELY IN PLACE AND HAVE ATTAINED FULL STRENGTH. CONTRACTOR MUST PROVIDE FOR DESIGN, PERMITS AND INSTALLATION OF SUCH BRACING.

9. CONTRACTOR MUST PROVIDE FOR DE–WATERING OF EXCAVATIONS FROM SURFACE WATER, GROUND WATER AND SEEPAGE.

10. CONTRACTOR MUST PROVIDE FOR DESIGN AND INSTALLATION OF ALL CRIBBING, SHEETING, AND SHORING REQUIRED TO SAFELY RETAIN THE EARTH BANKS.

11. EXCAVATION FOR FOUNDATIONS MUST BE APPROVED BY THE CONTRACTING OFFICER PRIOR TO PLACING THE REINFORCING AND CONCRETE.

12. SHALLOW FOOTING FOUNDATIONS MUST BE PLACED AND INSTALLED IN ACCORDANCE WITH THE CONSTRUCTION DRAWINGS AND SPECIFICATIONS PREPARED FOR THE PROJECT.

13. FOUNDATION BACKFILL AND UTILITY TRENCH BACKFILL WITHIN BUILDING AREA MUST BE MECHANICALLY COMPACTED IN LAYERS PER THE SPECIFICATIONS TO THE APPROVAL OF THE CONTRACTING OFFICER. FLOODING WILL NOT BE PERMITTED.

14. NEW FOUNDATIONS MUST BEAR ON APPROVED, UNDISTURBED, NATURAL SUBGRADE SOILS OR ON PROPERLY COMPACTED AND APPROVED FILL MATERIALS PLACED DIRECTLY ABOVE APPROVED SUBGRADES AS INDICATED IN CONSTRUCTION DRAWINGS AND SPECIFICATIONS.

CAST-IN-PLACE CONCRETE:

1. THE DESIGN AND CONSTRUCTION OF REINFORCED CONCRETE MUST CONFORM TO THE ACI BUILDING CODE (ACI 318) AND THE FOLLOWING CODES AND STANDARD SPECIFICATIONS:
   - A. CONCRETE MIXING: ASTM C94
   - B. CONCRETE PLACEMENT: ASTM C304

2. MATERIAL MUST CONFORM TO ALL OF THE FOLLOWING STANDARD SPECIFICATIONS, LATEST EDITION:
   - A. PORTLAND CEMENT: ASTM C150, TYPE I OR II
   - B. CONCRETE AGGREGATES: ASTM C33
   - C. REINFORCING STEEL: ASTM A615 DEFORMED BARS (GRADE 60)
     ASTM A706 GRADE 60 IS NOT EQUIVALENT AND IS NOT ACCEPTABLE
   - D. WELDED WIRE FABRIC (SHEET TYPE, ROLL TYPE NOT ACCEPTABLE): ASTM A1064

3. CONCRETE MUST ATTAIN THE FOLLOWING 28–DAY COMPRESSIVE STRENGTHS, UNLESS OTHERWISE INDICATED:
   - A. ALL STRUCTURAL CONCRETE: 5,000 PSI
   - B. LEAN CONCRETE: 3,000 PSI

4. CHLORIDES OR CHLORIDE SALTS ARE NOT ALLOWED IN THE CONCRETE MIXES.

5. ALL REINFORCING STEEL DETAILING AND PLACEMENT MUST CONFORM TO THE ACI DETAILING MANUAL PUBLICATION SP–66, "BUILDING CODE REQUIREMENTS FOR REINFORCED CONCRETE" ACI–318, AND THE "MANUAL OF STANDARD PRACTICE FOR DETAILING REINFORCED CONCRETE STRUCTURES" ACI–315. PROVIDE ADEQUATE BOLSTERS, HI–CHAIRS, SUPPORT BARS, ETC., TO MAINTAIN SPECIFIED COVER FOR THE ENTIRE LENGTH OF ALL REINFORCING. SECURE ALL REINFORCING BARS, ANCHOR BOLTS AND OTHER CONCRETE INSERTS IN POSITION PRIOR TO PLACING CONCRETE.

6. WELDING OF REINFORCING STEEL IS PROHIBITED.

7. MINIMUM CONCRETE PROTECTION (COVER) FOR REINFORCEMENT MUST BE PROVIDED AS FOLLOWS UNLESS SPECIFICALLY CALLED OUT OTHERWISE IN PLANS AND DETAILS:
   - A. CONCRETE PLACED AGAINST EARTH: 3 INCH
   - B. CONCRETE PLACED AGAINST FORM AND LATER EXPOSED TO EARTH OR WEATHER: 2 INCH
   - C. COLUMNS AND BEAMS (FROM TIE OR STIRRUP): 2 INCH
   - D. SLAB EXPOSED TO WEATHER OR GROUND: 2 INCH
   - E. SLABS AND WALLS (NOT EXPOSED TO WEATHER OR TO WEATHER FOR GROUND): 3/4 INCH

8. PROJECTING CORNERS OF BEAMS, WALLS, COLUMNS, ETC., MUST BE FORMED WITH 3/4 INCH CHAMFER, UNLESS OTHERWISE NOTED.

9. PROVIDE SLEEVES FOR ELECTRICAL OPENINGS IN CONCRETE BEFORE PLACING. DO NOT CUT ANY REINFORCING WHICH MAY CONFLICT. CORING IN CONCRETE IS NOT PERMITTED EXCEPT AS SHOWN. NOTIFY THE STRUCTURAL ENGINEER AND CONTRACTING OFFICER IN ADVANCE IF THE FIELD CONDITIONS DO NOT REFLECT THE CONDITIONS SHOWN ON THE DRAWINGS.

10. CONDUIT OR PIPE SIZE (O.D.) MUST NOT EXCEED 30 PERCENT OF SLAB THICKNESS AND MUST BE PLACED BETWEEN THE TOP AND BOTTOM REINFORCING UNLESS SPECIFICALLY DETAILED OTHERWISE. CONCENTRATIONS OF CONDUITS OR PIPES MUST BE AVOIDED EXCEPT WHERE DETAILED OPENINGS ARE PROVIDED.

CAST-IN-PLACE CONCRETE (CONT.):

11. ALL ROUGHENED SURFACES IN CONCRETE MUST BE MADE WITH A MINIMUM AMPLITUDE OF 1/4 INCH.

12. SEE SHEET S–003 FOR LIGHTWEIGHT CONCRETE MIX DESIGN FOR HIGH SECURITY MAGAZINE DOOR.

13. VERTICAL CONCRETE ELEMENTS, SUCH AS COLUMNS AND PILASTERS, AND HORIZONTAL CONCRETE ELEMENTS, SUCH AS HEADER BEAMS AND HEADWALL, ARE GOOD CANDIDATES FOR SELF CONSOLIDATING CONCRETE (SCC). THE CONTRACTOR SHALL CONSIDER THE USE OF SCC FOR THESE ELEMENTS AND/OR ADDITIONAL ELEMENTS IN WHICH REBAR CONGESTION OR ADEQUATE VIBRATORY CONSOLIDATION IS A CONCERN.

STRUCTURAL STEEL:

1. DETAIL, FABRICATE, AND ERECT STRUCTURAL STEEL IN ACCORDANCE WITH THE "AISC SPECIFICATION FOR THE DESIGN, FABRICATION AND ERECTION OF STRUCTURAL STEEL FOR BUILDINGS," LATEST EDITION.

2. CONTRACTOR MUST REVIEW AND APPROVE STRUCTURAL STEEL SHOP DRAWINGS PRIOR TO SUBMITTAL TO THE CONTRACTING OFFICER. DO NOT BEGIN FABRICATION PRIOR TO THE COMPLETION OF THE SHOP DRAWING REVIEW PROCESS.

3. FURNISH STRUCTURAL STEEL THAT IS NEW, CLEAN, STRAIGHT, AND CONFORMING TO THE FOLLOWING STANDARD SPECIFICATION, LATEST EDITION:
   - A. STRUCTURAL STEEL WIDE FLANGE: ASTM A992
   - B. STRUCTURAL STEEL CHANNELS, ANGLES, S–SHAPES, AND PLATES: ASTM A992 OR ASTM A572, GRADE 50
   - C. HOLLOW STRUCTURAL STEEL SECTIONS: ASTM A500, GRADE C
   - D. ANCHOR BOLTS: ASTM F1554 (GRADE SPECIFIED AS REQUIRED)
   - E. HIGH STRENGTH BOLTS: ASTM F3125 GRADE A325
   - F. HEADED STUD ANCHORS: ASTM A29 (TYPE B)
   - G. STAINLESS STEEL: ASTM A240, TYPE 304
   - H. SUBSTITUTIONS OF STEEL SHAPES IS NOT PERMITTED.

4. STRUCTURAL STEEL MUST CONFORM TO THE FOLLOWING PROPERTIES OR COATINGS:
   - A. ALL WELDMENT AND EMBEDMENTS FABRICATED FOR THE DOOR JAMB, HEAD, LOCKING PILASTER, AND TRENCH MUST BE MADE OF TYPE 304 STAINLESS STEEL PER ASTM A240.
   - B. ALL DOOR STRUCTURAL STEEL MUST BE PRIMED AND PAINTED AFTER FABRICATION. REFER TO DOOR COATINGS NOTES ON S–003.
   - C. ALL OTHER STRUCTURAL STEEL INCLUDING CANOPY FRAMING MUST BE HOT DIP GALVANIZED PER ASTM A123 AND COATED A MINIMUM DRY FILM THICKNESS (DFT) OF 12 MILS IN ACCORDANCE WITH THE FOLLOWING REQUIREMENTS:
     - a. PRIMER COAT: SOLVENT–BASED TWO COMPONENT EPOXY ANTI–CORROSIVE PRIMER (3–5 MILS), MPI (THE MASTER PAINTERS INSTITUTE) #101.
     - b. INTERMEDIATE COAT: HIGH SOLIDS EPOXY COATING (3–5 MILS). MPI #108.
     - c. TOP COAT: HIGH SOLIDS POLYURETHANE COATING (3–5 MILS). MPI #72.
   - D. GALVANIZE STRUCTURAL STEEL AFTER FABRICATION WHERE PRACTICAL. REPAIR DAMAGED GALVANIZED COATING USING ASTM A780 ZINC–RICH PAINT. FIELD CUTTING OF ANY HOT–DIP GALVANIZED HARDWARE IS NOT PERMITTED.

5. REPAIR ABRADED AND RUSTED SHOP PAINT WITH SAME PAINT AS SPECIFIED IN STRUCTURAL STEEL NOTE 4C.

6. WELDING MUST COMPLY WITH THE "STRUCTURAL WELDING CODE – STEEL"(AWS D1.1) AND THE "STRUCTURAL WELDING CODE – STAINLESS STEEL" (AWS D1.6). WELD ELECTRODES MUST BE E70XX FOR STEEL AND E308L FOR STAINLESS STEEL. PASSIVATION OF STAINLESS STEEL WELDS MUST BE PERFORMED PER ASTM A380. UNLESS OTHERWISE NOTED, MINIMUM WELD SIZE MUST BE 1/4 INCH CONTINUOUS FILLET WELD.

7. UNLESS OTHERWISE NOTED WELD ALL SHOP CONNECTIONS AND BOLT ALL FIELD CONNECTIONS. THE FABRICATOR IS RESPONSIBLE FOR THE DESIGN OF ALL CONNECTIONS UNLESS OTHERWISE DETAILED.

8. DO NOT CUT OR BURN HOLES IN STRUCTURAL STEEL WITHOUT THE APPROVAL OF THE CONTRACTING OFFICER.

9. SPLICING OF STRUCTURAL STEEL IS NOT PERMITTED WITH THE EXCEPTION OF THE WT MEMBERS SUPPORTING THE TOP OF THE DOOR AND NON–BLAST RESISTING COMPONENTS OR FOR MEMBERS APPROVED IN WRITING BY THE CONTRACTING OFFICER.

10. GROUT BELOW BASE PLATES WITH NON–SHRINK GROUT WITH MINIMUM COMPRESSIVE STRENGTH: 5,000 PSI

11. COAT ALL STRUCTURAL STEEL EXPOSED TO SOIL WITH TWO COATS OF COAL TAR EPOXY. EPOXY MUST MEET THE REQUIREMENTS OF PAINT SPECIFIC SSPC–PAINT 16.

12. BLAST DOOR AND COMPONENTS MUST MEET THE FOLLOWING TOLERANCES:
   - A. BLAST DOOR MUST HAVE A TOTAL MAX FLATNESS TOLERANCE OF ±1/4" VERTICALLY AND HORIZONTALLY.
   - B. TRENCHES AND DOOR GUIDE RAIL MUST HAVE A ±1/4" MAX DIFFERENTIAL TOLERANCE PER EVERY 37'–0".
   - C. SECURITY PILASTER AND ALL OTHER VERTICAL AND HORIZONTAL DOOR BEARING SURFACES MUST HAVE A ±1/4" MAX TOTAL TOLERANCE.

MARK	DESCRIPTION	DATE

NAVFAC

SEAL

A/E INFO

APPROVED
John J. Gibbons, P.E.
FOR COMMANDER NAVFAC

ACTIVITY
Approved by LCDR VINCE DEL GRECO, ROICC with PWD YORKTOWN, via Email.

SATISFACTORY TO DATE 03/26/2026

DES VAA	DRW MTW	CHK CWJ	
PM/DM	MME/WJW		
BRANCH MANAGER	DLB		
CHIEF ENG/ARCH	JWJ		
FIRE PROTECTION	HPN		

DEPARTMENT OF THE NAVY
NAVAL FACILITIES ENGINEERING SYSTEMS COMMAND
MIDLANT PDC CORE
NAVAL FACILITIES ENGINEERING SYSTEMS COMMAND
NAVAL STATION NORFOLK, VIRGINIA
NAVAL WEAPONS STATION
YORKTOWN, VIRGINIA
P-171 WEAPONS MAGAZINES
GENERAL NOTES – 1

SCALE: AS SHOWN
EPROJECT NO.: 1737010
CONSTR. CONTR. NO.: ##
NAVFAC DRAWING NO.: 12941965
SHEET 307 OF 499

S-001

DRAWFORM REVISION: 14 SEP 2023

SPECIAL INSPECTION SCHEDULE/ VERIFICATION

ITEM	EXTENT OF INSPECTION[1]	REFERENCE	COMMENT/ SCOPE
CONCRETE CONSTRUCTION			
REINFORCING STEEL PLACEMENT	P	ACI 318: 26.6.2	INSPECT SIZE, SPACING, COVER, POSITIONING AND GRADE OF REINFORCING STEEL. VERIFY THAT REINFORCING BARS ARE FREE OF FORM OIL OR OTHER DELETERIOUS MATERIALS. INSPECT BAR LAPS AND MECHANICAL SPLICES. VERIFY THAT BARS ARE ADEQUATELY TIED AND SUPPORTED ON CHAIRS OR BOLSTERS.
CONCRETE PLACEMENT	C	AC1 318: 26.5.2	INSPECT PLACEMENT OF CONCRETE. VERIFY THAT CONCRETE CONVEYANCE AND DEPOSITING AVOIDS SEGREGATION OR CONTAMINATION. VERIFY THAT CONCRETE IS PROPERLY CONSOLIDATED.
SAMPLING AND TESTING OF CONCRETE	C	ASTM C 172 ASTM C 31 ACI 318: 26.12	TEST CONCRETE COMPRESSIVE STRENGTH, SLUMP, AIR-CONTENT AND TEMPERATURE
CURING AND PROTECTION	P	ACI 318: 26.5.3-26.5.5	INSPECT CURING, COLD WEATHER PROTECTIONS AND HOT WEATHER PROTECTION PROCEDURES.
FORMWORK	P	ACI 318: 26.11	INSPECT FLATWORK FOR SHAPE, LOCATION AND DIMENSIONS OF THE CONCRETE MEMBER BEING FORMED.
DOOR CONSTRUCTION			
FABRICATOR CERTIFICATION/ QUALITY CONTROL PROCEDURES	S		REVIEW OF FABRICATOR'S QUALITY CONTROL PROCEDURES OR AISC CERTIFICATION.
FABRICATION INSPECTION	P		INSPECT IN-PLACE FABRICATION, OR REVIEW FABRICATOR'S APPROVED INDEPENDENT INSPECTION AGENCY'S REPORTS
SHOP DEMONSTRATION	C		SEE BLAST DOOR NOTES
SPECIAL ITEMS RELATED TO THE OTHER EXPLOSIVES SAFETY RELATED ITEMS			
REBAR FARADAY-SHIELD	P	DWG EG101; E-501; E-504	INSPECT REINFORCING STEEL TO ENSURE ELECTRICAL CONTINUITY BETWEEN THE CAP, WALLS, SLAB AND FOUNDATION THROUGH CRIMPED CONNECTIONS. DOCUMENT CONNECTIONS WITH PHOTOS AND CONTINUITY TEST. ALL CRIMPED CONNECTIONS MUST BE INSPECTED PRIOR TO CONCRETE PLACEMENT.
ECM GROUNDING	P	DWGS EG101; E-501; E-504	VISUALLY INSPECT TO ENSURE ECM FOUNDATION IS BONDED TO THE GROUNDING SYSTEM. DOCUMENT WITH PHOTOS.
GROUNDING SYSTEM	P	DWGS EG101; E-501; E-504, DA PAM 385-64, 16-30.	VISUALLY INSPECT GROUNDING SYSTEM CONDUCTORS TO ENSURE NO DAMAGE, BREAKAGE, OR CORROSION HAS OCCURED TO THE CONDUCTORS DURING INSTALL AND BEFORE EARTH BURIAL DOCUMENT WITH PHOTOS.
INDIVIDUAL BONDS	P	DWGS EG101; E-501; E-504, NFPA 780, 8.9 DA PAM 385-64, 16-30.	INSPECT ALL BONDS FOR LOOSE CONNECTIONS THAT MIGHT RESULT IN HIGH-RESISTANCE CONNECTIONS.
LPS COMPONENTS	P	NFPA 780, 8.9 DA PAM 385-64, 16-30.	INSPECT LPS COMPONENTS FOR SECURE MOUNTING AND PROTECTION AGAINST ACCIDENTAL MECHANICAL DISPLACEMENT.
LPS TESTING	S	NFPA 780, 8.9 DA PAM 385-64, 16-31.	PERFORM BONDING TEST ACROSS EACH BOND, AND AN EARTH ELECTRODE TEST OF THE LPS.
EARTH COVER	P	DWGS S-103	INSPECT DEPTH GAUGES ON ROOF PRIOR TO EARTH COVER PLACEMENT FOR SIZE AND STABILITY. INSPECT EARTH COVER DEPTH AND SLOPE TO ENSURE A 2'-0" MINIMUM IS PROVIDED ABOVE STRUCTURE.
DOOR CONTACT POINTS	C	DWGS S-205, S-507 AND S-508	INSPECT BEARING SURFACE AT TOP OF DOOR FRAME AND THE TRENCH AT THE BOTTOM OF THE DOOR
MISCELLANEOUS EMBEDDED AND ATTACHED ITEMS (DOORS, FRAMES, TRENCHES, ETC)	P		INSPECT EMBEDDED AND ATTACHED ITEMS TO ENSURE THEY ARE BONDED TO THE GROUNDING SYSTEM. DOCUMENT WITH PHOTOS.
ADDITIONAL SPECIAL INSPECTIONS IN ACCORDANCE WITH IBC CHAPTER 17			
STEEL CONSTRUCTION	P	IBC SEC 1705.2	
CONCRETE CONSTRUCTION	C	IBC SEC 1705.3	
SOILS	C	IBC SEC 1705.6	
DRIVEN DEEP FOUNDATIONS	P	IBC SEC 1705.7	
CAST-IN-PLACE DEEP FOUNDATIONS	P	IBC SEC 1705.8	
HELICAL PILE FOUNDATIONS	P	IBC SEC 1705.9	
FABRICATED ITEMS	P	IBC SEC 1705.11	
SPECIAL INSPECTIONS FOR WIND RESISTANCE	P	IBC SEC 1705.12	
SPECIAL INSPECTIONS FOR SEISMIC RESISTANCE	P	IBC SEC 1705.13	
TESTING FOR SEISMIC RESISTANCE	P	IBC SEC 1705.14	
ADDITIONAL SPECIAL INSPECTIONS			
TOLERANCES	C	SEE SPECS	

SPECIAL INSPECTION NOTES:

1. INSPECTION INTERVALS ARE AS FOLLOWS:
   C – CONTINUOUS: THE FULL-TIME OBSERVATION OF WORK REQUIRING SPECIAL INSPECTION BY AN APPROVED SPECIAL INSPECTOR WHO IS PRESENT IN THE AREA WHERE THE WORK IS BEING PERFORMED.
   P – PERIODIC: THE PART-TIME OR INTERMITTENT OBSERVATION OF WORK REQUIRING SPECIAL INSPECTION BY AN APPROVED SPECIAL INSPECTOR WHO IS PRESENT IN THE AREA WHERE THE WORK HAS BEEN OR IS BEING PERFORMED AND AT THE COMPLETION OF THE WORK.
   S – SUBMITTAL
2. STRUCTURAL TEST AND SPECIAL INSPECTIONS ARE BASED ON CHAPTER 17 OF THE IBC, UFC 3-301-01 AND UFC 4-420-01.
3. CONTRACTOR MUST HIRE A QUALIFIED INSPECTIONS AND TESTING AGENCY TO PERFORM SPECIAL INSPECTIONS AND TESTING IN ACCORDANCE WITH THE IBC. SUBMIT INSPECTION REPORTS TO THE CONTRACTING OFFICER FOR EACH DAY SPECIAL INSPECTIONS AND TESTING ARE PERFORMED.
4. THE SPECIAL INSPECTIONS LISTED IN THIS TABLE ARE TO BE USED IN CONJUNCTION WITH ALL SPECIAL INSPECTION REQUIREMENTS PER THE IBC SHOWN.
5. SPECIAL INSPECTIONS MUST BE PERFORMED BY AN INDEPENDENT THIRD PARTY DURING CONSTRUCTION ON THE TYPES OF WORK LISTED UNDER SECTION 1705 OF THE IBC REQUIRING VERIFICATION AND INSPECTION. THE CONTRACTING OFFICER MUST ATTEND ALL OBSERVATIONS. THESE INSPECTIONS ARE IN ADDITION TO THE INSPECTIONS DEFINED IN SECTION 110. THE INSPECTING AGENCY MUST PROVIDE REPORTS OF THE SPECIAL INSPECTIONS DIRECTLY TO THE GOVERNMENT.

STRUCTURAL ABBREVIATIONS:

AB	ANCHOR BOLT	IF	INSIDE FACE
ADD'L	ADDITIONAL	IN	INCH
AFF	ABOVE FINISHED FLOOR	INTERM	INTERMEDIATE
ALT	ALTERNATE	LP	LOW POINT
ACI	AMERICAN CONCRETE INSTITUTE	JT	JOINT
APPROX	APPROXIMATE	lb	POUNDS
ARCH	ARCHITECTURAL	LLH	LONG LEG HORIZONTAL
BM	BEAM	LLV	LONG LEG VERTICAL
BMS	BALANCED MAGNETIC SWITCH	LONGIT	LONGITUDINAL
BOT	BOTTOM	MAX	MAXIMUM
CI	CAST IRON	MECH	MECHANICAL
CIP	CAST-IN-PLACE	MANUF, MFR	MANUFACTURER
CL	CENTER LINE	MPH	MILES PER HOUR
CJ	CONSTRUCTION JOINT	MIN	MINIMUM
CLJ	CONTROL JOINT	MISC	MISCELLANEOUS
CLR	CLEAR (ANCE)	MTL	METAL
COL	COLUMN	NIC	NOT IN CONTRACT
CONC	CONCRETE	NS	NEAR SIDE
CONN	CONNECTION	NTS	NOT TO SCALE
CJP	COMPLETE JOINT PENETRATION	OC	ON CENTER
CONSTR	CONSTRUCTION	oz	OUNCES
CONT	CONTINUOUS	OF	OUTSIDE FACE
CONT'D	CONTINUED	OH	OPPOSITE HAND
DBA	DEFORMED BAR ANCHOR	OPNG	OPENING
DBL	DOUBLE	PJ	PANEL JOINT
DEG	DEGREE	PJP	PARTIAL JOINT PENETRATIONS
DET	DETAIL	PL	PLATE
DIA	DIAMETER	PN	PART NUMBER
DIM	DIMENSION	PCF	POUNDS PER CUBIC FOOT
DIST	DISTANCE	PSF	POUNDS PER SQUARE FOOT
DWG	DRAWING	PSI	POUNDS PER SQUARE INCH
EA	EACH	RAD	RADIUS
ECM	EARTH COVERED MAGAZINE	REF	REFERENCE
EF	EACH FACE	REINF	REINFORCEMENT
EJ	EXPANSION JOINT	REQ'D	REQUIRED
EL	ELEVATION	SCH/SCHED	SCHEDULE
ELECT	ELECTRICAL	SECT	SECTION
EOR	ENGINEER OF RECORD	SHT	SHEET
EQ	EQUAL	SIM	SIMILAR
ES	EACH SIDE	SOG	SLAB-ON-GRADE
ETC	ETCETERA	SPA	SPACE
EXT	EXTERIOR	SPECS	SPECIFICATIONS
FDN	FOUNDATION	SQ	SQUARE
FL	FLOOR	STL	STEEL
FIN	FINISH	SS	STAINLESS STEEL
FIN FL	FINISH FLOOR	STD	STANDARD
FS	FAR SIDE	STIFF	STIFFENER
FT	FOOT OR FEET	STRUCT	STRUCTURAL
FTG	FOOTING	T	TOP
GA	GAUGE	TBD	TO BE DETERMINED
GI	GALVANIZED IRON	TEMP	TEMPERATURE STEEL
GFCI	GROUND-FAULT CIRCUIT INTERRUPTERS	THK	THICK
HAS/HSA	HEADED ANCHOR STUD	THRU	THROUGH
HK	HOOK	TOC	TOP OF CONCRETE
HORIZ, (H)	HORIZONTAL	TOS	TOP OF SLAB, TOP OF STEEL
HSS	HOLLOW STRUCTURAL SECTION	TYP	TYPICAL
HSA	HEADED STUD ANCHOR	UFC	UNIFIED FACILITIES CRITERIA
IDS	INTRUSION DETECTION SYSTEM	UNO	UNLESS NOTED OTHERWISE
INFO	INFORMATION	VERT, (V)	VERTICAL
INTERM	INTERMEDIATE	W/	WITH
ILD	INTERNAL LOCKING DEVICE	WT	WIDE FLANGE TEE SECTION
IBC	INTERNATIONAL BUILDING CODE		

MARK	DESCRIPTION	DATE

SEAL

A/E INFO

APPROVED
Jessica Graham, P.E.
FOR COMMANDER NAVFAC

ACTIVITY
Approved by LCDR VINCE DEL GRECO, ROICC with PWD YORKTOWN, via Email.
SATISFACTORY TO DATE 03/26/2026

DES	SLC	DRW	SMT	CHK	SLC

PM/DM MME/WJW
BRANCH MANAGER DLB
CHIEF ENG/ARCH JWJ
FIRE PROTECTION HPN

DEPARTMENT OF THE NAVY
NAVAL FACILITIES ENGINEERING SYSTEMS COMMAND
MIDLANT PDC CORE
NAVAL FACILITIES ENGINEERING SYSTEMS COMMAND
NAVAL STATION NORFOLK, VIRGINIA
NAVAL WEAPONS STATION
YORKTOWN, VIRGINIA
P-171 WEAPONS MAGAZINES
GENERAL NOTES – 2

SCALE: AS SHOWN
EPROJECT NO.: 1737010
CONSTR. CONTR. NO.: ##
NAVFAC DRAWING NO. 12941966
SHEET 308 OF 499
S-002

DRAWFORM REVISION: 14 SEP 2023

LIGHTWEIGHT CONCRETE:

1. THE FOLLOWING MIX DESIGN AND CONCRETE MATERIAL PROPERTIES MUST BE USED FOR THE LIGHTWEIGHT CONCRETE LAYER IN THE HIGH SECURITY DOOR:

LIGHTWEIGHT CONCRETE MIX DESIGN				
MATERIAL	AMOUNT	UNIT	SPECIFIC GRAVITY	ASTM
LIGHTWEIGHT AGGREGATE	1530	lb	1.38	C331
CEMENT TYPE II	721	lb	3.15	C150
WATER	315	lb	1	C1602
SILICA FUME	82	lb	2.2	C1240
SUPERPLASTICIZER – TYPE A	8	oz*	1.27	C494
SYNTHETIC FIBERS – TYPE III	0.70	lb	0.855	C1116
TOTAL VOLUME	27	ft^3		
oz*/ 100lb OF CEMENTITIOUS MATERIAL				

LIGHTWEIGHT CONCRETE MATERIAL PROPERTY REQUIREMENTS			
PROPERTY	AMOUNT	UNIT	ASTM
SLUMP	2 1/4"	in	C143
MINIMUM DENSITY – UNIT WEIGHT	115	lb/ ft^3	C138
STRENGTH (28 DAY MINIMUM)	4000	psi	C39

2. LIGHTWEIGHT AGGREGATES MUST BE DRY.

3. ADJUST WATER AMOUNT TO +/– 0.5 lb SO THAT MIX HOLDS SHAPE WHEN FORMED INTO A BALL IN THE HAND.

4. MIX CAN BE SPLIT FOR VOLUME NEEDED.

5. MIX PROCEDURE:
   A. WEIGH OUT ALL MATERIALS.
   B. IN A SEPARATE CONTAINER, COMBINE AND MIX HALF OF WATER, PLASTICIZER AND ALL FIBERS.
   C. IN ANOTHER SEPARATE CONTAINER, COMBINE AND MIX SILICA FUME AND CEMENT.
   D. POUR WATER WITH PLASTICIZER AND ALL FIBERS INTO MIXER.
   E. POUR LIGHTWEIGHT FINE AGGREGATE INTO MIXER.
   F. SLOWLY ADD SILICA FUME AND CEMENT TO MIXER.
   G. ADD REMAINING WATER ADJUSTING AS NECESSARY (NOTE 3).
   H. ALLOW TO MIX FOR AT LEAST 10 MINUTES.
   I. WHEN MIX IS READY, POUR INTO DOOR CAVITIES OVER REBAR, TO PRESCRIBED DEPTH, ENSURE MIX FILLS ALL AREAS BEHIND REBAR, INTERNAL VIBRATE AS NECESSARY, NO VOIDS ALLOWED.

6. ALLOW CONCRETE TO CURE FOR 14 DAYS BEFORE MOVING DOOR. THE 4X RED OAK AND EXTERIOR PLATES SHALL NOT BE INSTALLED OVER THE CONCRETE UNTIL TWO OF THE FOLLOWING THREE CONDITIONS OCCUR.
   A. THE MOISTURE CONTENT ON THE SURFACE OF THE CONCRETE IS LESS THAN OR EQUAL TO 4.0 PERCENT AS MEASURED BY AN IMPEDANCE TEST PER ASTM F2659.
   B. THE IN–SITU RELATIVE HUMIDITY INSIDE THE CONCRETE IS LESS THAN OR EQUAL TO 75.0 PERCENT AS MEASURED PER ASTM F2170.
   C. 28 DAYS HAVE PASSED SINCE POURING THE CONCRETE.

7. QUESTIONS CAN BE REFERRED TO NAVFAC EXWC DOD LOCK PROGRAM, AND SECURITY, ENGINEERING DIV SH22.

STEEL DECK:

1. THE DESIGN, FABRICATION, ERECTION OF METAL DECKING MUST BE IN ACCORDANCE WITH THE CURRENT EDITION OF THE SDI SPECIFICATIONS AND THE SDI DIAPHRAGM MANUAL

2. STEEL ROOF DECK AND SIDING IS 1 1/2" x 18 GAUGE FACTORY–FINISHED DESIGNED FOR THE DEAD AND LIVE LOADS INDICATED.

3. STEEL ROOF DECK AND SIDING MUST BE ATTACHED TO SUPPORTS WITH #14 STAINLESS STEEL SCREWS AT EA VALLEY (MINIMUM 5 PER PANEL) PROVIDE AISI 304 STAINLESS STEEL SEALING CAPS WITH BONDED NEOPRENE WASHER OVER EACH FASTENER. USE 1/4–INCH BUTYL TAPE TO SEAL LAPS.

4. THE PLANS INDICATE DECK SPAN DIRECTION.

5. SUSPENDED CEILINGS, LIGHT FIXTURES, DUCTS, AND OTHER UTILITIES MUST NOT BE SUPPORTED FROM THE STEEL DECK.

6. STEEL DECK MUST CONFORM TO THE COATINGS FOR STRUCTURAL STEEL PROVIDED ON SHEET S–003.

MECHANICAL MATERIALS

1. LOUVERS MUST BE CONSTRUCTED OF 16 GAUGE GALVANIZED STEEL WITH 4" DEEP FRAME. BLADES MUST BE 16 GAGE GALVANIZED STEEL POSITIONED AT APPROXIMATELY 37.5 DEGREES DOWN FROM THE HORIZONTAL AND SPACED APPROXIMATELY 6" ON CENTER. SCREEN MUST BE 19 GAUGE GALVANIZED 1/4" MESH. APPROXIMATELY 50% FREE AREA.

2. VENTILATORS MUST BE CONSTRUCTED OF MINIMUM 24 GAUGE GALVANIZED STEEL AND MUST BE DESIGNED FOR A SUSTAINED WIND SPEED OF 132 MPH.

3. FIRE DAMPER FUSIBLE LINKS MUST HAVE A MELTING POINT OF 160 TO 165 DEGREES FAHRENHEIT. BREAKING STRENGTH MUST BE SUITABLE FOR LOADS IMPOSED BY COUNTERWEIGHTS.

4. PIPE FLANGE GASKETS MUST BE OF NON–ASBESTOS MATERIAL IN ACCORDANCE WITH ASME B16.21. GASKETS MUST BE FLAT, 1/16 INCH THICK, AND CONTAIN ARAMID FIBERS BONDED WITH STYRENE BUTADIENE RUBBER. FLANGE FASTENERS MUST BE TYPE 316 STAINLESS STEEL.

5. PROVIDE A DIELETRIC INSULATOR WHEREVER DISSIMILAR METALS CONTACT EACH OTHER.

6. PIPES UTILIZED FOR AIR MOVEMENT BETWEEN THE MECHANICAL ROOM AND MAGAZINE MUST BE ASTM A312 TP316 STAINLESS STEEL. PIPE FLANGES MUST BE IN ACCORDANCE WITH ASTM B16.5 AND ASTM A182 F316 STAINLESS STEEL.

DOOR COATINGS:

1. ALL COATINGS AND INSTALLATION OF COATINGS MUST COMPLY WITH:
   A. UFGS – 09 97 13.27.
   B. SHOP COATINGS: SSPC (THE SOCIETY OF PROTECTIVE COATINGS) QP3.
   C. FIELD COATINGS: SSPC QP1 + QS1.
   D. COLOR: LIGHT GRAY.

2. SURFACE PREPARATION:
   A. REMOVE SLAG FROM ALL WELDING SURFACES PRIOR TO CLEANING IN ACCORDANCE WITH NACE SP0178.
   B. SOLVENT CLEAN SURFACE TO BE COATED PRIOR TO ABRASIVE BLASTING IN ACCORDANCE WITH SSPC SP1.
   C. DRY ABRASIVE BLAST TO NEAR WHITE FINISH IN ACCORDANCE WITH SSPC SP10. BLAST PROFILE MUST BE 1–3 MILS TOOTH HEIGHT.

3. PAINT SYSTEMS:
   A. TOTAL COATING DRY FILM THICKNESS (DFT): 12 MILS.
   B. PRIMER COAT: ABRASION RESISTANT INORGANIC ZINC SILICATE PRIMER (3–5 MILS). SSPC PAINT 20, TYPE IC, LEVEL 1, WITH AT LEAST 85% ZINC IN DRY FILM.
   C. INTERMEDIATE COAT: HIGH SOLIDS EPOXY COATING (3–5 MILS). MPI #108.
   D. TOP COAT: HIGH SOLIDS POLYURETHANE COATING (3–5 MILS). MPI #72.

4. ALL SURFACES OF ALL DOOR COMPONENTS MUST BE SOLVENT CLEANED, DRY ABRASIVE BLASTED, AND ZINC RICH PRIMER COATED. PRIOR TO FULLY ASSEMBLING OR FABRICATING DOOR, CLEAN AND PRIMER SURFACES THAT WILL BECOME INACCESSIBLE AFTER DOOR IS ASSEMBLED. THE DOOR MUST NOT BE GALVANIZED. EPOXY INTERMEDIATE AND POLYURETHANE TOP COATS MUST BE APPLIED TO ALL EXTERIOR SURFACES OF THE FULLY–ASSEMBLED DOOR.

ELECTRICAL BONDING & GROUNDING

1. ALL STEEL LOUVERS, VENTILATORS, GUARDRAILS DOORS AND FRAMES MUST BE ELECTRICALLY BONDED TO THE MAGAZINE REINFORCING CAGE.

2. ALL STRUCTURAL AND MISCELLANEOUS ITEMS EMBEDDED IN CONCRETE MUST BE ELECTRICALLY BONDED TO THE REINFORCING CAGE BY WIRE TIES.

3. THE REINFORCING CAGE MUST BE MADE ELECTRICALLY CONTINUOUS BY WIRE TIES AT A MINIMUM OF 48 INCH ON CENTERS IN EVERY DIRECTION, REFER TO DETAIL A1 ON DRAWING E–504.

4. ALL WALLS AND CONSTRUCTION JOINTS MUST BE ELECTRICALLY BONDED. SEE THE ELECTRICAL DRAWINGS FOR DETAILS.

5. ALL STRUCTURAL STEEL AND REINFORCING STEEL MUST BE GROUNDED TO THE SECONDARY GROUND. SEE THE ELECTRICAL DRAWINGS FOR DETAILS.

6. BURIED OR EMBEDDED ITEMS MUST BE DOCUMENTED WITH PHOTOS AT INTERVALS OF 20 FEET.

PLUMBING MATERIALS

1. FLOOR DRAIN FIXTURES MUST CONSIST OF A CAST IRON BODY, NICKEL BRONZE ADJUSTABLE TOP, 6" ROUND STRAINER, FLASHING COLLAR, SURFACE MEMBRANE CLAMP. PROVIDE WITH DEEP SEAL TRAP AND BARRIER–TYPE TRAP SEAL PROTECTION DEVICE CONFORMING TO ASSE 1072 WHERE CONNECTING TO SANITARY SEWER SYSTEM.

2. UNDERGROUND DRAINAGE PIPING MUST CONSIST ASTM D2665 SCH 40 PVC SOLID CORE PIPING WITH DWV PATTERN FITTINGS. PERFORATED DRAIN PIPING MUST INCLUDE 1/2" DIAMETER HOLES SPACED 5" O.C. IN TWO ROWS 120 DEGREES APART PER ASTM D2729. ALL PERFORATED DRAIN PIPING MUST BE INSTALLED WITH HOLES FACING DOWN.

3. PREFABRICATED TRENCH DRAINS MUST BE 6" WIDE, SHALLOW, PRECAST POLYESTER CONCRETE CHANNEL OF INTERLOCKING DESIGN. 3" OUTLETS. DUCTILE IRON EDGE RAIL AND EXTRA HEAVY DUTY, DIN19580 LOAD CLASS E DUCTILE IRON SLOTTED TOP GRATE FASTENED TO RAIL. GRATE SLOTS MUST BE NO WIDER THAN 1/4" OR PROVIDE STAINLESS STEEL MESH SCREEN FASTENED TO BOTTOM OF GRATES. MESH OPENINGS MUST BE NO LARGER THAN 1/4" TO MITIGATE RODENT ENTRY.

BLAST DOOR NOTES:

1. THE BLAST DOOR MANUFACTURER MUST BE SOLELY RESPONSIBLE FOR INSTALLATION AND ERECTION OF THE BLAST DOOR.

2. THE DOOR MANUFACTURER MUST COMMENCE A SHOP DEMONSTRATION OF EACH DOOR IN THE PRESENCE OF A GOVERNMENT OFFICIAL, CONSISTING OF A SUCCESSFUL CYCLE OF OPENING AND CLOSING THE DOOR BY CONTROLS, OPENING AND CLOSING OF TRENCH PLATES BY DOOR PLOWS AND ALIGNMENT OF DOOR IN SECURITY PILASTER. DEMONSTRATION MUST BE A MINIMUM OF HALF THE LENGTH OF THE DOOR TRAVEL. DEMONSTRATION MUST ALSO INCLUDE MANUAL OPERATION OF BLAST DOOR IN BOTH DIRECTIONS. UPON SATISFACTION OF THE GOVERNMENT OFFICIAL REVIEWING THE DOOR DEMONSTRATION(S) AND RECEIPT OF GOVERNMENT APPROVAL LETTER, THE MANUFACTURER WILL BE RELEASED FROM DEMONSTRATING ADDITIONAL DOORS.

3. THE DOOR MANUFACTURER MUST COMMENCE A FIELD DEMONSTRATION OF EACH DOOR IN THE PRESENCE OF A GOVERNMENT OFFICIAL, CONSISTING OF A SUCCESSFUL CYCLE OF OPENING AND CLOSING THE DOOR BY CONTROLS, OPENING AND CLOSING OF TRENCH PLATES BY DOOR PLOWS, LOCKING AND UNLOCKING DOOR, AND ALIGNMENT OF DOOR IN SECURITY PILASTER.

4. THE BLAST DOOR MANUFACTURER MUST HAVE A MINIMUM OF 10 YEARS OF EXPERIENCE IN THE DESIGN, CONSTRUCTION AND INSTALLATION OF DOORS WEIGHING A MINIMUM OF 30 KIPS, CONSISTING OF BOTTOM ROLLING DOORS AND LARGE HEAVY DOORS SUCH AS MAGAZINE BLAST DOORS AND/OR NUCLEAR CONTAINMENT DOORS. THE BLAST DOOR MANUFACTURER MUST SUBMIT PROOF OF EXPERIENCE TO THE CONTRACTING OFFICER FOR APPROVAL BY NAVFAC EXWC AND NAVFAC ATLANTIC. A MINIMUM OF 5 EXAMPLES MUST BE SUBMITTED.

5. PROVIDE STEEL PLATE BOTTOM WHEELS HAVING A MINIMUM TREAD DIAMETER AS REQUIRED FOR THE ACTUAL WHEEL LOADING. CONSTRUCTION WHEEL ASSEMBLES TO PERMIT REMOVAL OF THE WHEEL WITHOUT REMOVING THE DOOR LEAF FOR ITS POSITION ON THE RAIL.

6. THE GENERAL CONTRACTOR MUST SELECT A SINGLE SUPPLIER TO PROVIDE A COMPLETE BLAST DOOR SYSTEM INCLUDING BUT NOT LIMITED TO THE BLAST DOOR AND ALL OF ITS ASSOCIATED COMPONENTS AND HARDWARE, RAIL, TRENCH, TRENCH COVER ASSEMBLY, PLOW AND EMBEDDED PLATES.

7. PROVIDE A HAND RELEASE ON THE DESIGNED BRAKING SYSTEM TO RELEASE THE BRAKE WHEN IT BECOMES NECESSARY TO MANUALLY MOVE THE DOOR. PROVIDE AN AUTOMATIC RESET TYPE HAND RELEASE SO THAT THE BRAKE WILL BE OPERABLE DURING SUBSEQUENT ELECTRICAL OPERATIONS OF THE DOOR.

8. BLAST DOOR MANUFACTURER MUST PROVIDE A COMPLETE BLAST DOOR MANUAL THAT INCLUDES MAINTENANCE AND STEP BY STEP INSTRUCTIONS OF WHEEL REMOVAL.

9. THE PLOW/TRENCH COVER ASSEMBLY ALONG WITH THE WHEEL/MOTOR ASSEMBLY ARE NOTIONAL AND SHOWN FOR BIDDING PURPOSES AND MAY VARY BASED ON THE DOOR MANUFACTURER'S APPROVED DESIGN.

DEPARTMENT OF DEFENSE EXPLOSIVES SAFETY BOARD (DDESB) APPROVAL NOTES:

DO NOT REMOVE THESE NOTES WHEN PREPARING CONSTRUCTION DRAWINGS FOR SITE ADAPTATION.

1. THIS STANDARD IS APPROVED BY THE DEPARTMENT OF DEFENSE EXPLOSIVE SAFETY BOARD (DDESB) AS A 7–BAR EARTH COVERED MAGAZINE AND MAY BE SITED AS AN EXPOSED SITE MAGAZINE FROM OTHER POTENTIAL EXPLOSION SITES STORING UP TO 500,000 LBS HAZARD DIVISION 1.1 EXPLOSIVES.

2. THE DESIGN AND DETAILING OF THIS STANDARD MAGAZINE FOR BLAST LOADING IS THE SOLE RESPONSIBILITY OF THE GOVERNMENT. THE GOVERNMENT IS THE ENGINEER OF RECORD FOR THE BLAST DOOR.

3. ANY DEVIATION FROM THESE STANDARD DRAWINGS, EXCEPT FOR FOUNDATION MODIFICATIONS, WITHOUT THE WRITTEN APPROVAL FROM THE DEPARTMENT OF DEFENSE EXPLOSIVE SAFETY BOARD (DDESB) MAY REQUIRE THE MAGAZINE TO BE CONSIDERED AN UNDEFINED MAGAZINE AND MAY SEVERELY RESTRICT THE ALLOWABLE STORAGE CAPACITY.

4. THE SITE ADAPT ENGINEER IS THE ENGINEER OF RECORD FOR THE SITE ADAPT PROCESS.

MARK	DESCRIPTION	DATE

SEAL

A/E INFO

APPROVED
FOR COMMANDER NAVFAC

ACTIVITY
Approved by LCDR VINCE DEL GRECO, ROICC with PWD YORKTOWN, via Email.
SATISFACTORY TO DATE 03/26/2026

DES VAA	DRW MTW	CHK CWJ	
PM/DM	MME/WJW		
BRANCH MANAGER	DLB		
CHIEF ENG/ARCH	JWJ		
FIRE PROTECTION	HPN		

DEPARTMENT OF THE NAVY
NAVAL FACILITIES ENGINEERING SYSTEMS COMMAND
MIDLANT PDC CORE
NAVAL FACILITIES ENGINEERING SYSTEMS COMMAND
NAVAL STATION NORFOLK, VIRGINIA
NAVAL WEAPONS STATION
YORKTOWN, VIRGINIA
P-171 WEAPONS MAGAZINES
GENERAL NOTES – 3

SCALE: AS SHOWN
EPROJECT NO.: 1737010
CONSTR. CONTR. NO. ##
NAVFAC DRAWING NO. 12941967
SHEET 309 OF 499
S-003
DRAWFORM REVISION: 14 SEP 2023

SITE SPECIFIC DESIGN CRITERA:

RISK CATEGORY: III

WIND DESIGN DATA:

a. BASIC DESIGN WIND SPEED:	124 mph
b. ALLOWABLE STRESS DESIGN WIND SPEED:	96 mph
c. ENCLOSURE CLASSIFICATION:	Enclosed
d. EXPOSURE CATEGORY:	C

SEISMIC DESIGN DATA:

a. SEISMIC IMPORTANCE FACTOR:	I/E = 1.25
b. SITE CLASS:	D
c. SITE SEISMICITY:	S/s = 0.104g S/ds = 0.110g
d. SEISMIC DESIGN CATEGORY:	A

SNOW DESIGN DATA:

a. GROUND SNOW LOAD	15 psf

ENVIRONMENTAL SEVERITY CLASSIFICATION

ESC	C4

SITE ADAPTATION FOUNDATION NOTES:

1. FOUNDATIONS HAVE BEEN DESIGNED IN ACCORDANCE WITH THE RECOMMENDATIONS IN THE GEOTECHNICAL REPORT PREPARED BY NAVFAC MID-ATLANTIC, DATED SEPTEMBER, 18 2023.

2. FOUNDATION HAVE BEEN DESIGNED TO BEAR ON A LOAD TRANSFER PLATFORM SUPPORTED BY RIGID INCLUSIONS WITH A MAXIMUM NET ALLOWABLE BEARING PRESSURE OF 4,000 PSF.

3. REFER TO GEOTECHNICAL PLAN SHEETS B-201 GROUND IMPROVEMENT PLAN, B-501 GROUND IMPROVEMENT DETAILS AND B-502 TYPICAL FILL SECTIONS AND DETAILS FOR ADDITIONAL GEOTECHNICAL REQUIREMENTS.

4. PRIOR TO PLACING FOUNDATION CONCRETE, A NAVFAC GEOTECHINCAL ENGINEER SHALL INSPECT FOUNDATION EXCAVATIONS TO EVALUATE THE EXTENT OF LOOSE SOFT OR OTHERWISE UNSATISFACTORY SOIL MATERIAL AND TO VERIFY THE BEARING CAPACITY. SOIL NOT SUITABLE FOR FOUNDATION SUPPORT SHALL BE UNDERCUT AND REPLACED WITH ENGINEERED FILL.

5. ALL FOUNDATIONS ELEMENTS MUST BE FORMED TO FACILITATE CONCRETE PLACEMENT AND CONFORM TO THE SHAPE, LINES AND THICKNESS INDICATED ON THE FOUNDATION PLAN. EARTH-FORMED FOUNDATION ELEMENTS ARE NOT PERMITTED.

6. PLACE FOUNDATION CONCRETE ON THE SAME DAY EXCAVATIONS ARE MADE OR AS SOON AS PRACTICAL.

7. DO NOT INSTALL FOUNDATIONS UNTIL FOUNDATION WORK HAS BEEN COORDINATED WITH ADJACENT UNDERGROUND UTILITIES AND STRUCTURES. ANY FOOTING STEPS INDICATED ON THE PLANS ARE SCHEMATIC AND SHALL BE COORDINATED WITH OTHER TRADES.

8. SOIL TREATMENT FOR TERMITE PREVENTION MUST BE PERFORMED DURING BUILDING CONSTRUCTION IN ACCORDANCE WITH SPECIFICATION SECTION 31 31 16.13.

DESIGNER OF RECORD (DOR) NOTES:

1. THESE DRAWINGS ARE A MODIFIED VERSION OF A STANDARD DRAWING SET.

PROJECT TITLE: CONTAINERIZED LONG WEAPONS STORAGE (CLWS) DOUBLE BAY NAVY EARTH COVERED MAGAZINE STANDARD DRAWINGS WITH NAVFAC DRAWING NUMBERS 12914696 – 12914757 DRAWING APPROVAL DATE 24 SEPTEMBER 2024.

THESE DRAWINGS HAVE BEEN MODIFIED BY THE DEPARTMENT OF THE NAVY, NAVAL FACILITIES ENGINEERING SYSTEMS COMMAND, MIDATLANTIC DIVISION. A TITLE SHEET AND INDEX OF DRAWINGS HAVE BEEN ADDED. THE REMAINING SHEETS ARE DIRECT CAD COPIES OF THE ORIGINAL SHEETS WITH MODIFICATIONS AS NEEDED FOR SITE ADAPTATION.

THE DESIGNER OF RECORD HAS REVIEWED STRUCTURAL SHEETS S-001 THRU S-003 OF THE CONTAINERIZED LONG WEAPONS STORAGE (CLWS) DOUBLE BAY NAVY EARTH COVERED MAGAZINE STANDARD DRAWINGS SET TO DETERMINE IF THE SITE SPECIFIC DESIGN CRITERIA FOR THIS SITE ADAPTATION OF THE STANDARD DESIGN SATISFIES THE CRITERIA LISTED ON THE STANDARD DRAWINGS. THE EVALUATION OF THE STATIC LOADS, SEISMIC DESIGN DATA AND WIND DESIGN DATA DETERMINED THAT NO MODIFICATIONS WILL BE REQUIRED TO THE STANDARD DESIGN.

THE EVALUATION OF THE SOIL DATA RESULTED IN NO MODIFICATION TO THE FOUNDATION SYSTEM OF THE STANDARD DESIGN. A GROUND IMPROVEMENTS SYSTEM CONSISTING OF RIGID INCLUSIONS AND LOAD TRANSFER PLATFORMS WIL BE REQUIRED TO PROVIDE ADEQUATE FOUNDATION SUPPORT FOR THIS SITE ADAPTATION. THE LENGTH OF THE RETAINING WALLS WERE INCREASED TO RETAIN THE SHALLOWER EARTH FILL SLOPE. NO COMPONENTS WERE OF THE STRUCTURE OTHER THAN THE FOUNDATION FOR GROUND IMPROVEMENTS AND THE RETAINING WALL LENGTHS HAVE BEEN EVALUATED BY THE DOR'S.

POST-INSTALLED ANCHOR NOTES:

1. THE ADHESIVE ANCHOR SYSTEM USED FOR POST-INSTALLED ANCHORAGE TO CONCRETE MUST CONFORM TO THE PROJECT SPECIFICATIONS AND THE REQUIREMENTS OF THE MOST RECENTLY PUBLISHED ACI 355.4, "ACCEPTANCE CRITERIA FOR QUALIFICATION OF POST-INSTALLED ADHESIVE ANCHORS IN CONCRETE AND COMMENTARY."

2. WHERE INDICATED ON THE DRAWINGS, PROVIDE ADHESIVE ANCHORS WITH THE SPECIFIED MINIMUM ALLOWABLE STRENGTH TENSION AND SHEAR VALUES, INCLUDING APPLICABLE REDUCTIONS FOR SPACING, EDGE DISTANCE, ETC.

3. ADHESIVE ANCHORS IN CONCRETE MUST BE QUALIFIED FOR USE IN CRACKED AND UNCRACKED CONCRETE IN ACCORDANCE WITH ACI 355.4.

4. SUBMIT ICC-ES EVALUATION REPORTS, SHOWING COMPLIANCE WITH SPECIFIED CODES, REFERENCES, AND SEISMIC DESIGN CATEGORY, FOR ADHESIVE ANCHOR SYSTEMS FOR USE WITH CONCRETE.
5. BULK-MIXED ADHESIVES ARE NOT PERMITTED.

6. PROVIDE ADHESIVE WITH MINIMUM PROPERTIES INDICATED IN THE SPECIFICATIONS.

7. CONCRETE AT THE TIME OF ADHESIVE ANCHOR INSTALLATION MUST HAVE A MINIMUM AGE OF 21 DAYS.

8. INSTALL ADHESIVE ANCHORS WITH TRAINED QUALIFIED PERSONNEL, IN ACCORDANCE WITH THE MANUFACTURER'S WRITTEN INSTALLATION INSTRUCTIONS.

9. PROVIDE THOROUGHLY CLEANED ANCHOR HOLES PRIOR TO ADHESIVE INJECTION, AS REQUIRED BY THE MANUFACTURER'S PRINTED INSTALLATION INSTRUCTIONS. PROTECT DRILLED AND CLEANED ANCHOR HOLES FROM CONTAMINATION UNTIL THE ADHESIVE IS INSTALLED.

10. PROVIDE ANCHORS CLEAN, OIL-FREE, AND FREE OF LOOSE RUST, PAINT, OR OTHER COATINGS.

11. PROVIDE INSTALLED ADHESIVE ANCHORS SECURELY FIXED IN-PLACE TO PREVENT DISPLACEMENT WHILE THE ADHESIVE CURES.

12. ARRANGE FOR AN ANCHOR MANUFACTURER'S REPRESENTATIVE TO PROVIDE ONSITE INSTALLATION TRAINING FOR ALL OF THEIR ANCHORING PRODUCTS SPECIFIED. THE CONTRACTING OFFICER MUST RECEIVE DOCUMENTED CONFIRMATION THAT ALL PERSONNEL WHO INSTALL ANCHORS ARE TRAINED PRIOR TO THE COMMENCEMENT OF INSTALLING ANCHORS.

13. PERSONNEL INSTALLING HORIZONTAL OR OVERHEAD ADHESIVE ANCHORS MUST BE QUALIFIED PER THE SPECIFICATIONS.

14. DO NOT DAMAGE EXISTING REINFORCING STEEL OR EMBEDDED ITEMS DURING ANCHOR INSTALLATION, UNLESS OTHERWISE NOTED ON THE DRAWINGS. PRIOR TO ANCHOR INSTALLATION, DETERMINE LOCATION OF EXISTING REINFORCING STEEL BY NON-DESTRUCTIVE MEANS AND NOTIFY THE CONTRACTING OFFICER OF ANY CONFLICTS BETWEEN REINFORCING STEEL AND ANCHOR LOCATION PRIOR TO FABRICATION OF MATERIALS.

GENERAL PROJECT SYMBOLS

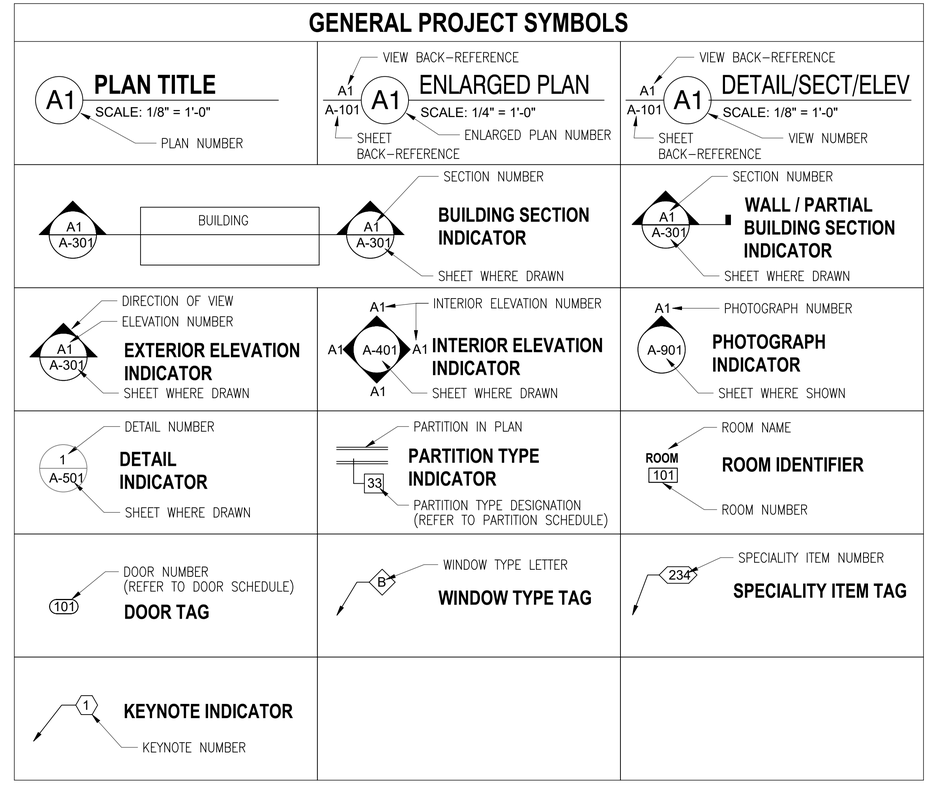

MARK	DESCRIPTION	DATE

SEAL

A/E INFO

APPROVED

FOR COMMANDER NAVFAC

ACTIVITY
Approved by LCDR VINCE DEL GRECO, ROICC with PWD YORKTOWN, via Email.

SATISFACTORY TO DATE 03/26/2026

DES VAA	DRW MTW	CHK CWJ	
PM/DM	MME/WJW		
BRANCH MANAGER	DLB		
CHIEF ENG/ARCH	JWJ		
FIRE PROTECTION	HPN		

DEPARTMENT OF THE NAVY
NAVAL FACILITIES ENGINEERING SYSTEMS COMMAND
MIDLANT PDC CORE
NAVAL FACILITIES ENGINEERING SYSTEMS COMMAND
NAVAL STATION NORFOLK, VIRGINIA
NAVAL WEAPONS STATION
YORKTOWN, VIRGINIA
P-171 WEAPONS MAGAZINES
GENERAL NOTES – 4

SCALE: AS SHOWN
EPROJECT NO.: 1737010
CONSTR. CONTR. NO. ##
NAVFAC DRAWING NO. 12941968
SHEET 310 OF 499

S-004

DRAWFORM REVISION: 14 SEP 2023

FILE NAME: K:\NAYorktownMILCON\2024_1737010_P171_Weapons_Magazines\9_Design\DWGS - 4\MAGAZINE\Sheet\07_STRUCTS-004 GENERAL NOTES - 4.dwg LAYOUT NAME: S-004 GENERAL NOTES - 4 PLOTTED: Tuesday, March 31, 2026 - 1:48pm USER: miguel.walker

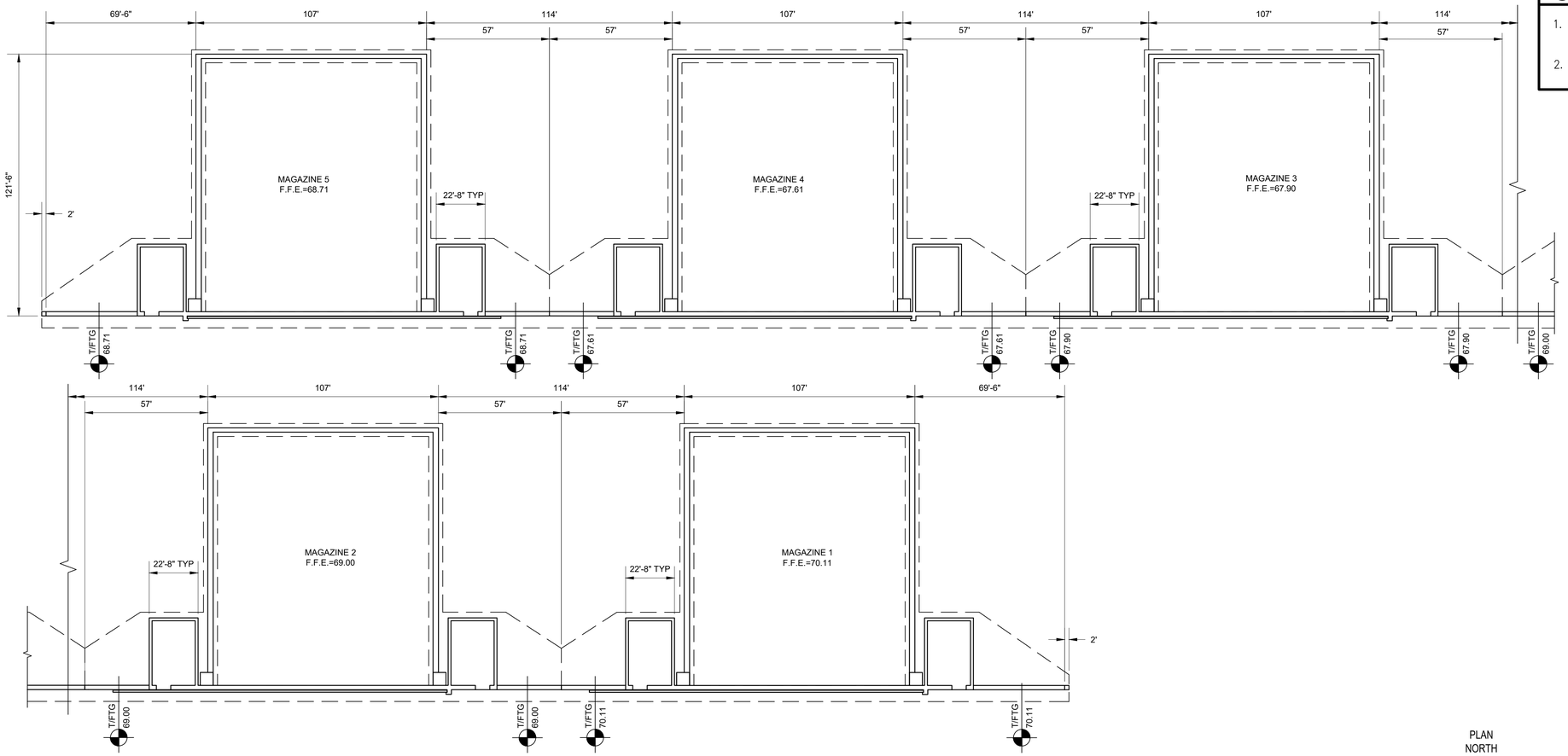

B1 OVERALL PLAN
SCALE: 1" = 30'

PLAN NORTH

0' 15' 30' 60' 90'

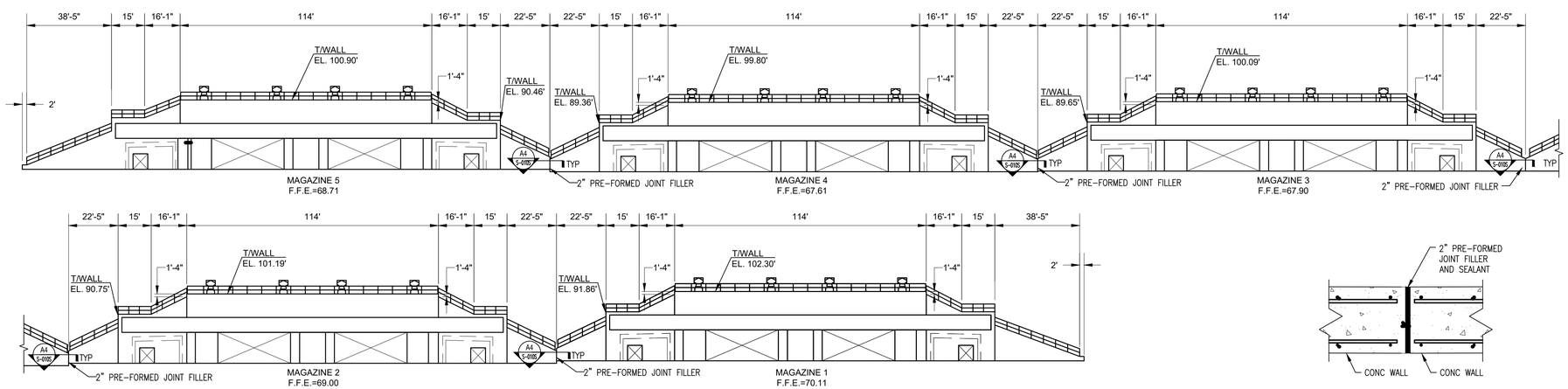

A1 HEADWALL ELEVATION
SCALE: 1" = 30'

0' 15' 30' 60' 90'

A4 SECTION
NTS

SHEET NOTES

1. SEE SHEET S-001, S-002, S-003, AND S-004 FOR GENERAL NOTES.
2. CONFIGURATION SHOWN FOR 2.5:1 SIDE SLOPE.

KEY PLAN

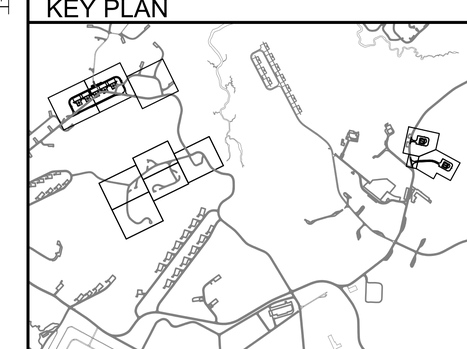

MARK	DESCRIPTION	DATE
#	#	#

SEAL

A/E INFO

APPROVED
FOR COMMANDER NAVFAC

ACTIVITY
Approved by LCDR VINCE DEL GRECO, ROICC with PWD YORKTOWN, via Email.

SATISFACTORY TO DATE	03/26/2026
DES VAA	DRW MTW / CHK CWJ
PM/DM	MME/WJW
BRANCH MANAGER	DLB
CHIEF ENG/ARCH	JWJ
FIRE PROTECTION	HPN

DEPARTMENT OF THE NAVY
NAVAL FACILITIES ENGINEERING SYSTEMS COMMAND
MIDLANT POC CORE

NAVAL FACILITIES ENGINEERING SYSTEMS COMMAND
NAVAL STATION NORFOLK, VIRGINIA

NAVAL WEAPONS STATION
YORKTOWN, VIRGINIA

P-171 WEAPONS MAGAZINES

OVERALL PLAN – SITE ADAPTED

SCALE:	AS SHOWN
EPROJECT NO.:	1737010
CONSTR. CONTR. NO.	##
NAVFAC DRAWING NO.	12941969
SHEET	311 OF 499

S-010-S

DRAWFORM REVISION: 14 SEP 2023

FILE NAME: K:\NAYorktown\MILCON\2024_1737010_P171_Weapons_Magazines\B_Design\DWGS - MAGAZINES\Sheet\07_STRUCTS-011-S OVERALL PLAN - SITE ADAPTED - 2.5 SLOPE - BID OPTION.dwg LAYOUT NAME: S-010-S OVERALL PLAN - SITE ADAPTED - 2.5 SLOPE - BID OPTION.dwg PLOTTED: Tuesday, March 31, 2026 - 1:48pm USER: miguel.walker

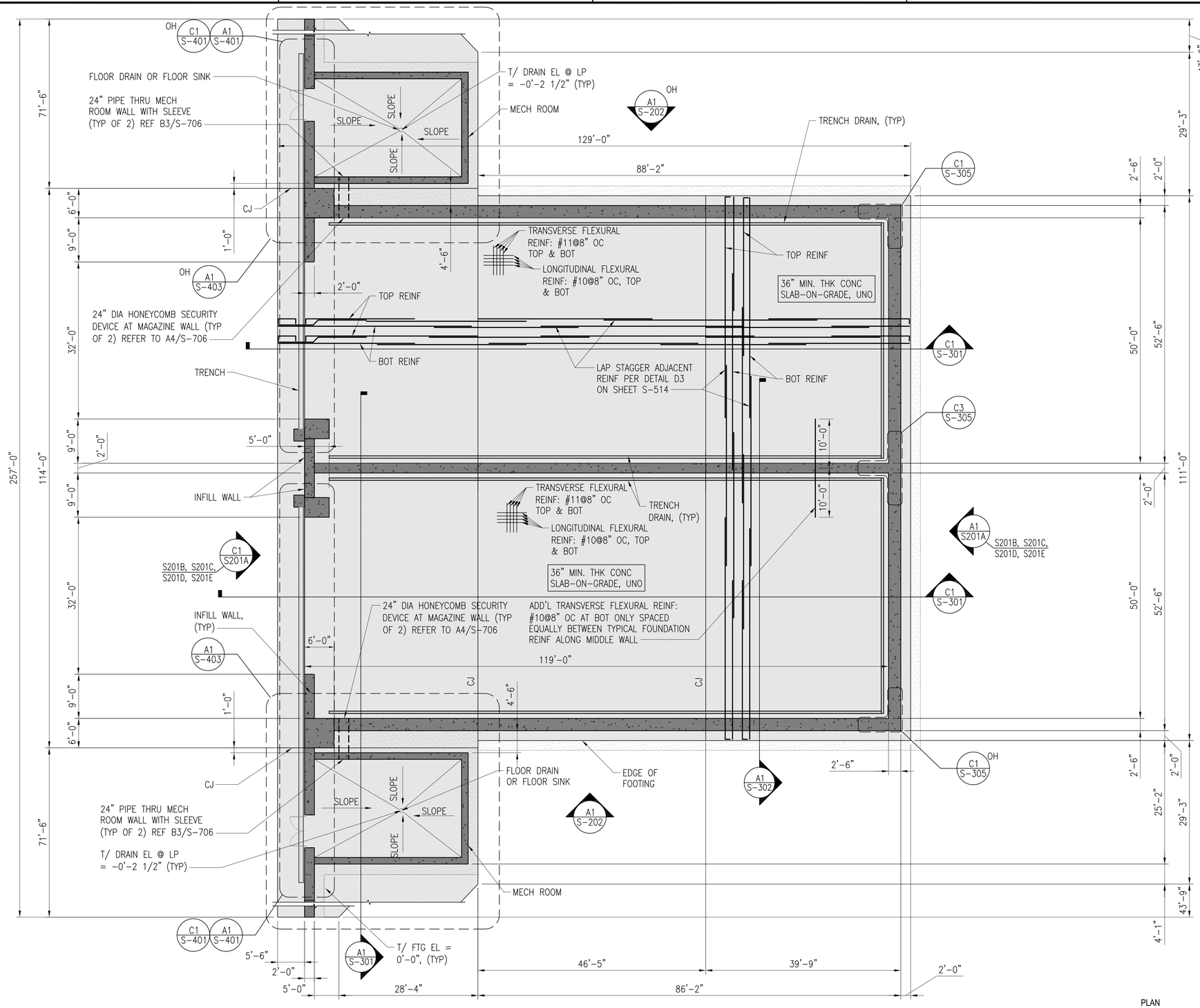

A1 FOUNDATION / FLOOR PLAN

SCALE: 3/32" = 1'-0"

GENERAL SHEET NOTES

1. ALL ELEVATIONS ARE IN REFERENCE TO A DATUM ELEVATION OF 0'-0" FOR THE MAGAZINE FINISHED FLOOR ELEVATION. SEE CIVIL DRAWINGS FOR ACTUAL ELEVATIONS.
2. SEE SHEETS S-001 THROUGH S-004 FOR GENERAL (AND ADDITIONAL) NOTES.
3. ALL REINFORCING STEEL MUST BE CONTINUOUSLY BONDED AND GROUNDED PER S-003 AND A1/E-504
4. SLAB-ON-GRADE MUST BE MOIST CURED FOR A MINIMUM OF 14 DAYS.
5. SLAB-ON-GRADE CONSTRUCTION JOINTS ARE INDICATED AS "CJ" ON PLAN. SEE STANDARD DETAIL ON S-514 FOR CONSTRUCTION JOINT DETAILS.
6. BLAST DOOR IS NOT SHOWN FOR CLARITY.
7. SEE SHEET S-302 FOR ARRANGEMENT OF SLAB REINFORCEMENT AND FOR SIDEWALL REINFORCEMENT SIZE, SPACING, AND ARRANGEMENT.
8. SEE SHEET S-105 FOR FOUNDATION DRAINAGE FLOOR PLAN.
9. SEE S-403 FOR MECHANICAL ROOM DIMENSIONS.
10. DRAWING CONFIGURATION OF THE MAGAZINE IS MIRRORED ABOUT THE CENTERLINE OF THE MIDDLE WALL. ELEVATIONS, SECTIONS AND DETAILS SHOWN IN THE DRAWING AS OPPOSITE HAND (OH) INDICATE A MIRROR CONDITION CORRESPONDING TO ELEMENT ON OPPOSITE SIDE OF THE MAGAZINE.

GRAPHIC SCALES

SCALE: 3/32" = 1'-0" 0 8' 16' 32'

MARK	DESCRIPTION	DATE

NAVFAC

SEAL

A/E INFO

APPROVED

FOR COMMANDER NAVFAC

ACTIVITY: Approved by LCDR VINCE DEL GRECO, ROICC with PWD YORKTOWN, via Email.

SATISFACTORY TO DATE 03/26/2026

DES VAA | DRW MTW | CHK CWJ

PM/DM MME/WJW

BRANCH MANAGER DLB

CHIEF ENG/ARCH JWJ

FIRE PROTECTION HPN

DEPARTMENT OF THE NAVY
NAVAL FACILITIES ENGINEERING SYSTEMS COMMAND
MIDLANT PDC CORE

NAVAL FACILITIES ENGINEERING SYSTEMS COMMAND
NAVAL STATION NORFOLK, VIRGINIA

NAVAL WEAPONS STATION YORKTOWN, VIRGINIA

P-171 WEAPONS MAGAZINES

FOUNDATION FLOOR PLAN

SCALE: AS SHOWN

EPROJECT NO.: 1737010

CONSTR. CONTR. NO. ##

NAVFAC DRAWING NO. 12941970

SHEET 312 OF 499

S-101

DRAWFORM REVISION: 14 SEP 2023

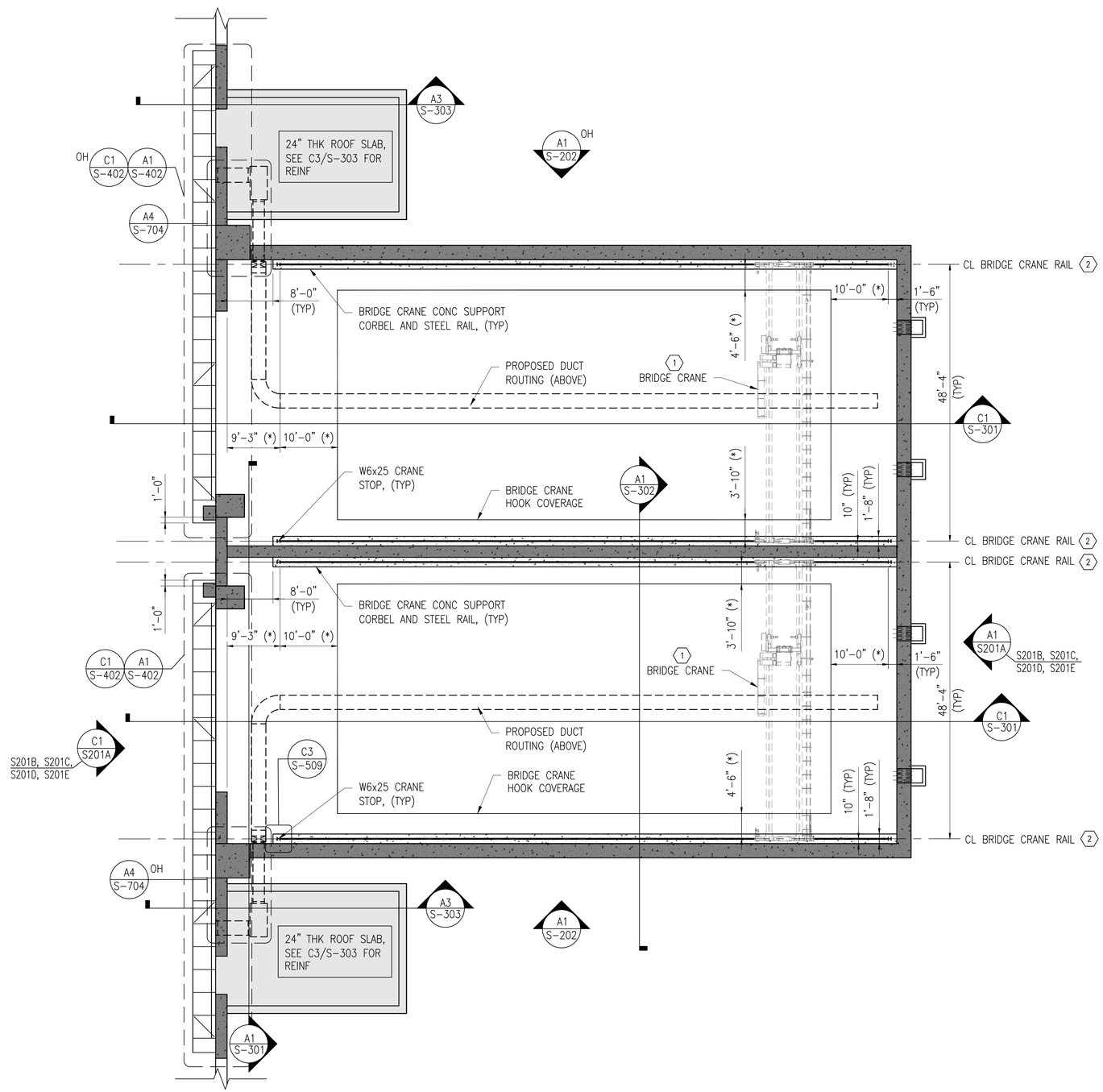

A1 BRIDGE CRANE AND CANOPY FRAMING PLAN

SCALE: 3/32" = 1'-0"

PLAN NORTH

GENERAL SHEET NOTES

1. ALL ELEVATIONS ARE IN REFERENCE TO A DATUM ELEVATION OF 0'-0" FOR THE MAGAZINE FINISHED FLOOR ELEVATION. SEE CIVIL DRAWINGS FOR ACTUAL ELEVATIONS.
2. SEE SHEETS S-001 THROUGH S-004 FOR GENERAL (AND ADDITIONAL) NOTES.
3. DIMENSIONS, ELEVATIONS, OR OTHER INFORMATION DESIGNATED WITH AN (*) MUST BE VERIFIED WITH SELECTED EQUIPMENT DIMENSION, REQUIRED CLEARANCES AND HOOK HEIGHTS.
4. BRIDGE CRANE MUST COMPLY WITH UFGS 41 22 13.14 AND MEET THE FOLLOWING REQUIREMENTS.
   - A. 25 TON CAPACITY
   - B. DOUBLE BOX GIRDER SYSTEM
   - C. MAXIMUM WHEEL LOAD = 37K
   - D. MAXIMUM TOTAL WEIGHT = 50K
   - E. MAXIMUM HOIST AND TROLLEY WEIGHT = 10K
   - F. MINIMUM WHEEL SPACING = 6FT
   - G. CMAA 70 CLASS D SERVICE
   - H. HOOK AND CRANE CLEARANCE REQUIREMENTS ON THIS SHEET AND ON A1/ S-302
5. BRIDGE CRANE RAIL MUST BE CONSTRUCTED TO RUNWAY TOLERANCES IN ACCORDANCE WITH CMAA SPECIFICATION #70. SEE DETAIL A1 AND A3 ON SHEET S-305. RAIL SPLICES AND SPLICE CONNECTIONS TO BE SELECTED AND LOCATED BY BRIDGE CRANE RAIL MANUFACTURER.
6. BRIDGE CRANE HOOK MUST BE SIZED TO APPROPRIATELY INTERFACE WITH CROSBY SHACKLE G213/S213, NOMINAL – SIZE 1 3/4", WORKING LOAD LIMIT 25 TON.
7. NOTES 3, 4, AND 6 ARE NOT IN PROJECT AND ARE PROVIDED FOR INFORMATIONAL PURPOSES ONLY.

KEYNOTES

1. BRIDGE CRANE NOT IN PROJECT
2. BRIDGE CRANE RAILS IN PROJECT

GRAPHIC SCALES

SCALE: 3/32" = 1'-0" 0 8' 16' 32'

MARK	DESCRIPTION	DATE

NAVFAC

SEAL

A/E INFO

APPROVED

FOR COMMANDER NAVFAC

ACTIVITY: Approved by LCDR VINCE DEL GRECO, ROICC with PWD YORKTOWN, via Email.

SATISFACTORY TO DATE 03/26/2026

DES VAA | DRW MTW | CHK CWJ

PM/DM MME/WJW

BRANCH MANAGER DLB

CHIEF ENG/ARCH JWJ

FIRE PROTECTION HPN

DEPARTMENT OF THE NAVY
NAVAL FACILITIES ENGINEERING SYSTEMS COMMAND
MIDLANT PDC CORE
NAVAL FACILITIES ENGINEERING SYSTEMS COMMAND
NAVAL STATION NORFOLK, VIRGINIA
NAVAL WEAPONS STATION YORKTOWN, VIRGINIA
P-171 WEAPONS MAGAZINES
BRIDGE CRANE AND CANOPY FRAMING PLAN

SCALE: AS SHOWN

EPROJECT NO.: 1737010

CONSTR. CONTR. NO. ##

NAVFAC DRAWING NO. 12941971

SHEET 313 OF 499

S-102

DRAWFORM REVISION: 14 SEP 2023

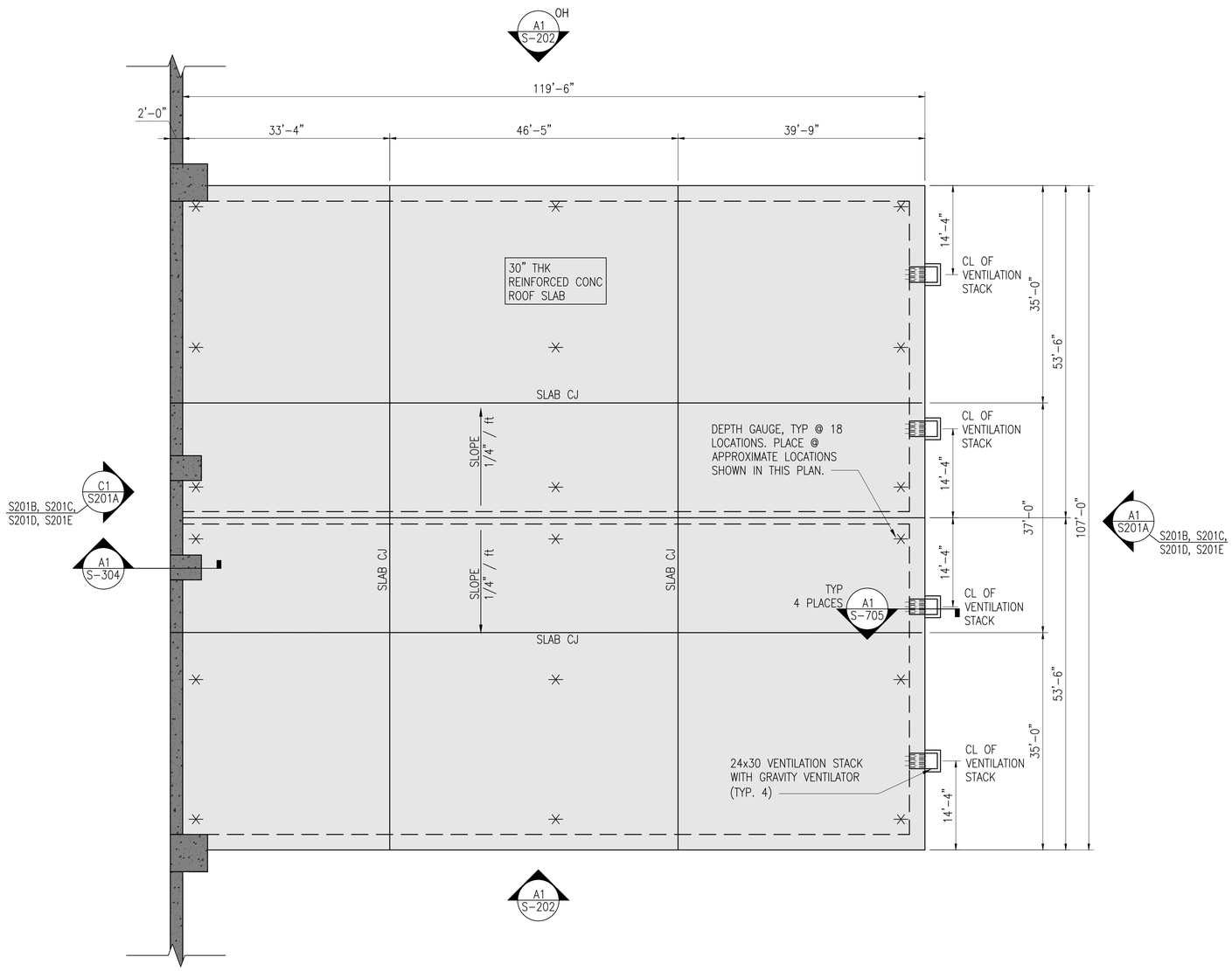

A1 ROOF FRAMING PLAN

SCALE: 3/32" = 1'-0"

PLAN NORTH

GENERAL SHEET NOTES

1. ALL ELEVATIONS ARE IN REFERENCE TO A DATUM ELEVATION OF 0'-0" FOR THE MAGAZINE FINISHED FLOOR ELEVATION. SEE CIVIL DRAWINGS FOR ACTUAL ELEVATIONS.
2. SEE SHEETS S-001 THROUGH S-004 FOR GENERAL (AND ADDITIONAL) NOTES.
3. ALL REINFORCING STEEL MUST BE CONTINUOUSLY BONDED AND GROUNDED PER S-003 AND A1/E-504.
4. CONCRETE SLAB MUST BE MOIST CURED FOR A MINIMUM OF 14 DAYS.
5. SEE S-514 FOR CONCRETE SLAB CONSTRUCTION JOINT DETAILS.
6. SEE SHEET S-104 FOR ROOF SLAB REINFORCEMENT SIZE, SPACING, ARRANGEMENT AND LOCATION OF LAP SPLICES.
7. SEE SHEET S-302 FOR ARRANGEMENT OF SLAB REINFORCEMENT AND FOR SIDEWALL REINFORCEMENT, SIZE, SPACING.

GRAPHIC SCALES

SCALE: 3/32" = 1'-0" 0 8' 16' 32'

MARK	DESCRIPTION	DATE

NAVFAC

SEAL

A/E INFO

APPROVED
Jared E. Greiner, R.A.

FOR COMMANDER NAVFAC

ACTIVITY
Approved by LCDR VINCE DEL GRECO, ROICC with PWD YORKTOWN, via Email.

SATISFACTORY TO DATE 03/26/2026

DES VAA DRW MTW CHK CWJ

PM/DM MME/WJW

BRANCH MANAGER DLB

CHIEF ENG/ARCH JWJ

FIRE PROTECTION HPN

DEPARTMENT OF THE NAVY
NAVAL FACILITIES ENGINEERING SYSTEMS COMMAND
MIDLANT PDC CORE

NAVAL FACILITIES ENGINEERING SYSTEMS COMMAND
NAVAL STATION NORFOLK, VIRGINIA

NAVAL WEAPONS STATION YORKTOWN, VIRGINIA

P-171 WEAPONS MAGAZINES

ROOF FRAMING PLAN

SCALE: AS SHOWN

EPROJECT NO.: 1737010

CONSTR. CONTR. NO. ##

NAVFAC DRAWING NO. 12941972

SHEET 314 OF 499

S-103

DRAWFORM REVISION: 14 SEP 2023

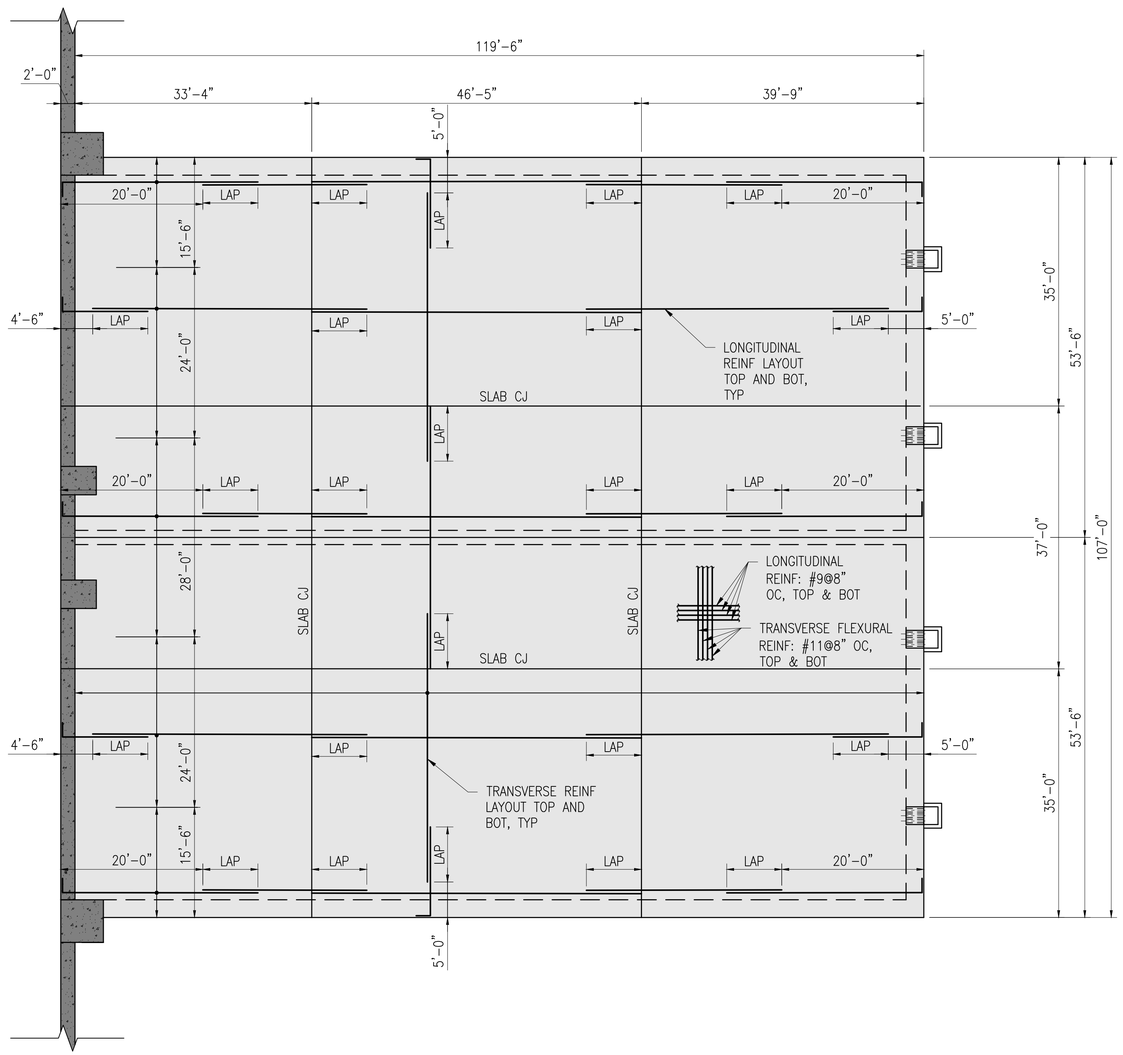

A1 ROOF REINFORCING PLAN

SCALE: 3/32" = 1'-0"

PLAN NORTH

GENERAL SHEET NOTES

1. ALL ELEVATIONS ARE IN REFERENCE TO A DATUM ELEVATION OF 0'-0" FOR THE MAGAZINE FINISHED FLOOR ELEVATION. SEE CIVIL DRAWINGS FOR ACTUAL ELEVATIONS.
2. SEE SHEETS S-001 THROUGH S-004 FOR GENERAL (AND ADDITIONAL) NOTES.
3. ALL REINFORCING STEEL MUST BE CONTINUOUSLY BONDED AND GROUNDED PER S-003 AND A1/E-504.
4. CONCRETE SLAB MUST BE MOIST CURED FOR A MINIMUM OF 14 DAYS.
5. SEE S-514 FOR CONCRETE SLAB CONSTRUCTION JOINT DETAILS.
6. SEE SHEET S-302, S-303 FOR ARRANGEMENT OF SLAB REINFORCEMENT AND FOR SIDEWALL REINFORCEMENT, SIZE, SPACING AND ARRANGEMENT.

GRAPHIC SCALES

SCALE: 3/32" = 1'-0" 0 8' 16' 32'

MARK	DESCRIPTION	DATE

SEAL

A/E INFO

APPROVED

FOR COMMANDER NAVFAC

ACTIVITY: Approved by LCDR VINCE DEL GRECO, ROICC with PWD YORKTOWN, via Email.

SATISFACTORY TO DATE 03/26/2026

DES VAA	DRWN MTW	CHK CWJ	
PM/DM	MME/WJW		
BRANCH MANAGER	DLB		
CHIEF ENG/ARCH	JWJ		
FIRE PROTECTION	HPN		

DEPARTMENT OF THE NAVY
NAVAL FACILITIES ENGINEERING SYSTEMS COMMAND
MIDLANT PDC CORE

NAVAL FACILITIES ENGINEERING SYSTEMS COMMAND
NAVAL STATION NORFOLK, VIRGINIA

NAVAL WEAPONS STATION
YORKTOWN, VIRGINIA

P-171 WEAPONS MAGAZINES

ROOF REINFORCING PLAN

SCALE: AS SHOWN

EPROJECT NO.: 1737010

CONSTR. CONTR. NO. ##

NAVFAC DRAWING NO. 12941973

SHEET 315 OF 499

S-104

DRAWFORM REVISION: 14 SEP 2023

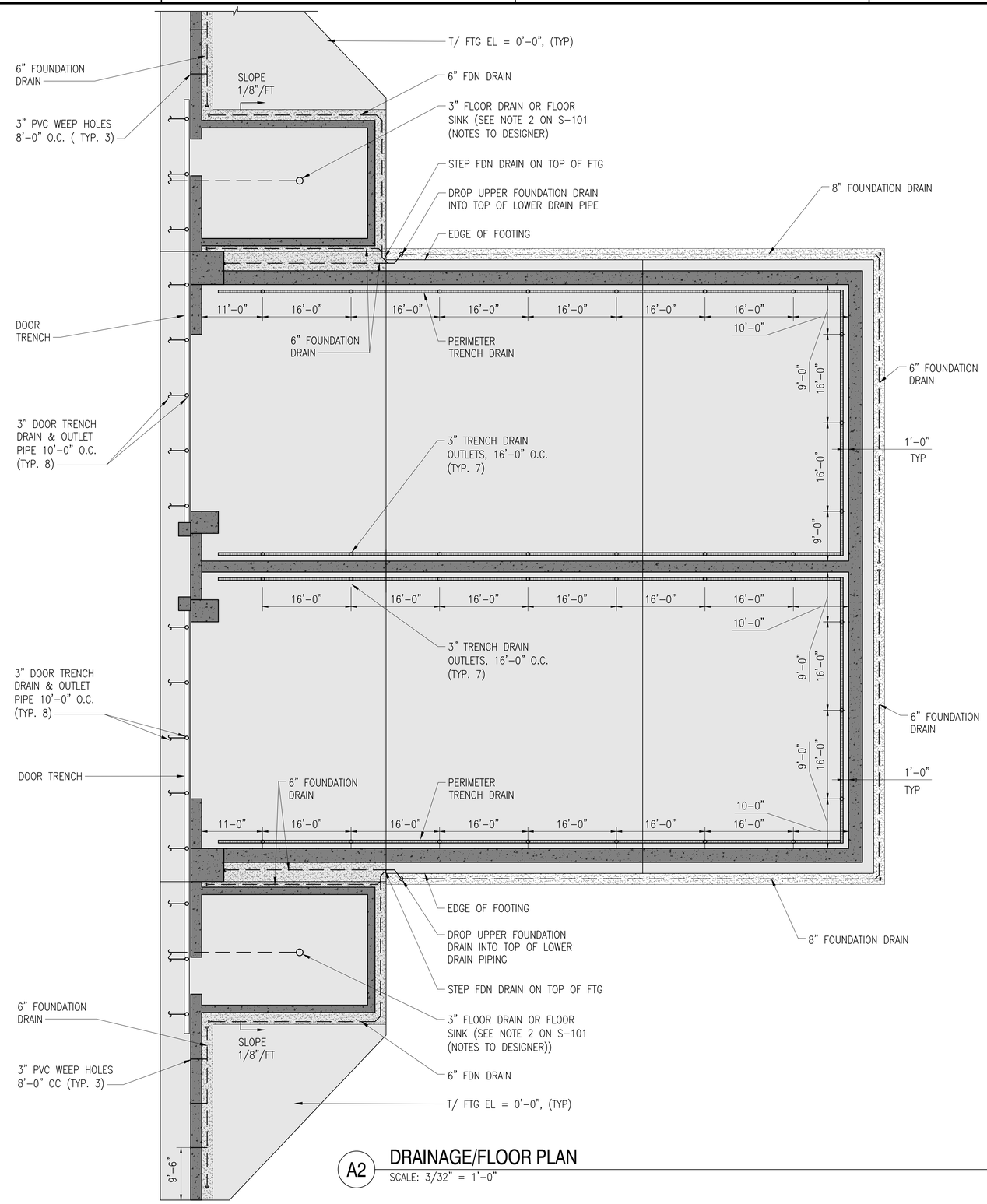

A2 DRAINAGE/FLOOR PLAN
SCALE: 3/32" = 1'-0"

PLAN NORTH

GENERAL SHEET NOTES

1. ALL ELEVATIONS ARE IN REFERENCE TO A DATUM ELEVATION OF 0'-0" FOR THE MAGAZINE FINISHED FLOOR ELEVATION. SEE CIVIL DRAWINGS FOR ACTUAL ELEVATIONS.
2. SEE SHEETS S-001 THROUGH S-004 FOR GENERAL (AND ADDITIONAL) NOTES.
3. FINAL PIPING CONFIGURATION AND TERMINATION POINTS PER SITE-ADAPT ENGINEER.
4. SEE S-707 FOR ISOMETRIC DRAINAGE DETAIL.

GRAPHIC SCALES
SCALE: 3/32" = 1'-0" 0 8' 16' 32'

MARK	DESCRIPTION	DATE

NAVFAC

SEAL

A/E INFO

APPROVED
FOR COMMANDER NAVFAC

ACTIVITY
Approved by LCDR VINCE DEL GRECO, ROICC with PWD YORKTOWN, via Email.

SATISFACTORY TO DATE 03/26/2026

DES VAA | DRW MTW | CHK CWJ
PM/DM MME/WJW
BRANCH MANAGER DLB
CHIEF ENG/ARCH JWJ
FIRE PROTECTION HPN

DEPARTMENT OF THE NAVY
NAVAL FACILITIES ENGINEERING SYSTEMS COMMAND
MIDLANT PDC CORE
NAVAL FACILITIES ENGINEERING SYSTEMS COMMAND
NAVAL STATION NORFOLK, VIRGINIA
NAVAL WEAPONS STATION
YORKTOWN, VIRGINIA
P-171 WEAPONS MAGAZINES
FOUNDATION DRAINAGE PLAN

SCALE: AS SHOWN
EPROJECT NO.: 1737010
CONSTR. CONTR. NO. ##
NAVFAC DRAWING NO. 12941974
SHEET 316 OF 499
S-105

DRAWFORM REVISION: 14 SEP 2023

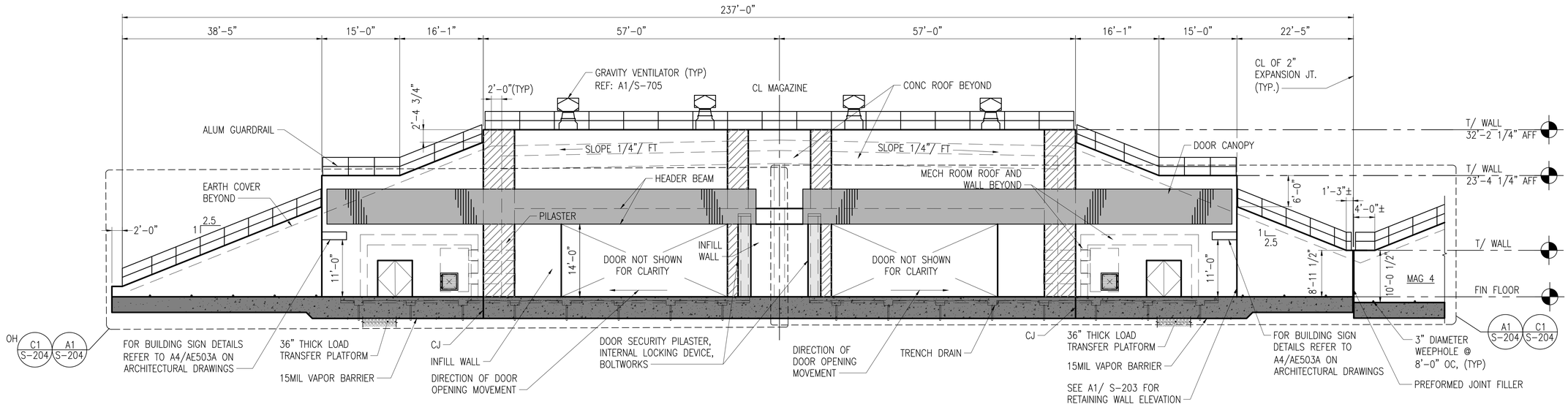

A1 S-101 C1 **FRONT ELEVATION - MAGAZINE 5**

SCALE: 3/32" = 1'-0"

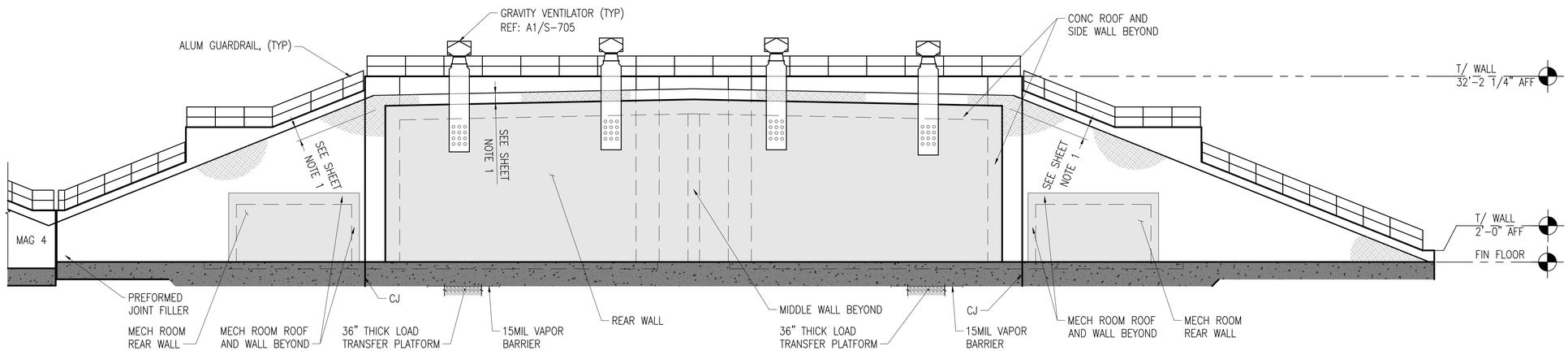

A1 S-101 A1 **REAR ELEVATION - MAGAZINE 5**

SCALE: 3/32" = 1'-0"

GENERAL SHEET NOTES

1. PROVIDE 2'-0" - 0" /+ 2" OF EMBANKMENT FILL MATERIAL (MINIMUM OF 1'-6" OF EARTH COVER MATERIAL PLUS 6" OF ASTM C33 SAND MATERIAL AT THE ROOF, SIDE, AND REAR WALLS) TO ANY EDGE OF THE MAGAZINE. PROVIDE A NON-WOVEN GEOTEXTILE ROOT BARRIER OVER THE EXTERIOR SURFACE OF THE ASTM C33 SAND.

GRAPHIC SCALES

3/32"=1'-0" 0' 8' 16' 24'

MARK	DESCRIPTION	DATE

SEAL

A/E INFO

APPROVED
Gerard J. Gaspar, P.E.
FOR COMMANDER NAVFAC 4/12/2026

ACTIVITY
Approved by LCDR VINCE DEL GRECO, ROICC with PWD YORKTOWN, via Email.

SATISFACTORY TO DATE 03/26/2026

DES VAA DRW MTW CHK CWJ
PM/DM MME/WJW
BRANCH MANAGER DLB
CHIEF ENG/ARCH JWJ
FIRE PROTECTION HPN

DEPARTMENT OF THE NAVY
NAVAL FACILITIES ENGINEERING SYSTEMS COMMAND
MIDLANT PDC CORE
NAVAL FACILITIES ENGINEERING SYSTEMS COMMAND
NAVAL STATION NORFOLK, VIRGINIA
NAVAL WEAPONS STATION
YORKTOWN, VIRGINIA
P-171 WEAPONS MAGAZINES
BUILDING ELEVATIONS – MAGAZINE 5

SCALE: AS SHOWN
EPROJECT NO.: 1737010
CONSTR. CONTR. NO.: ##
NAVFAC DRAWING NO. 12941975
SHEET 317 OF 499
S201A
DRAWFORM REVISION: 14 SEP 2023

FILE NAME: K:\AYorktown\MILCON\2024_1737010_P171_Weapons_Magazines\B_Design\DWGS - MAGAZINE\Sheet\07_STRUCT\S201A BUILDING ELEVATIONS - 1A.dwg LAYOUT NAME: S201A BUILDING ELEVATIONS - 1A PLOTTED: Tuesday, March 31, 2026 - 1:49pm USER: mrigel.walker

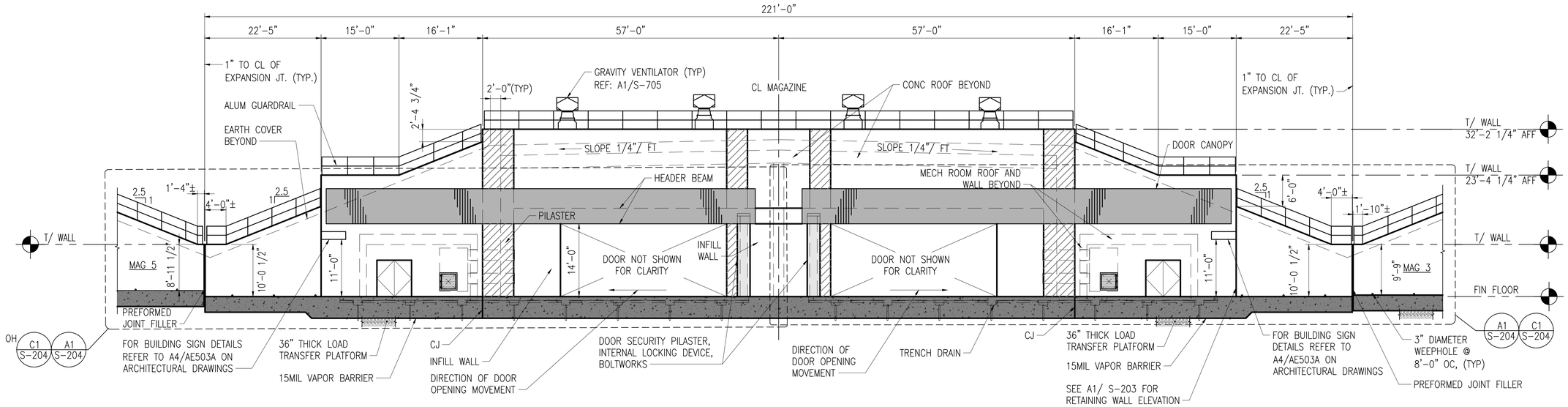

A1 S-101 C1

FRONT ELEVATION - MAGAZINE 4

SCALE: 3/32" = 1'-0"

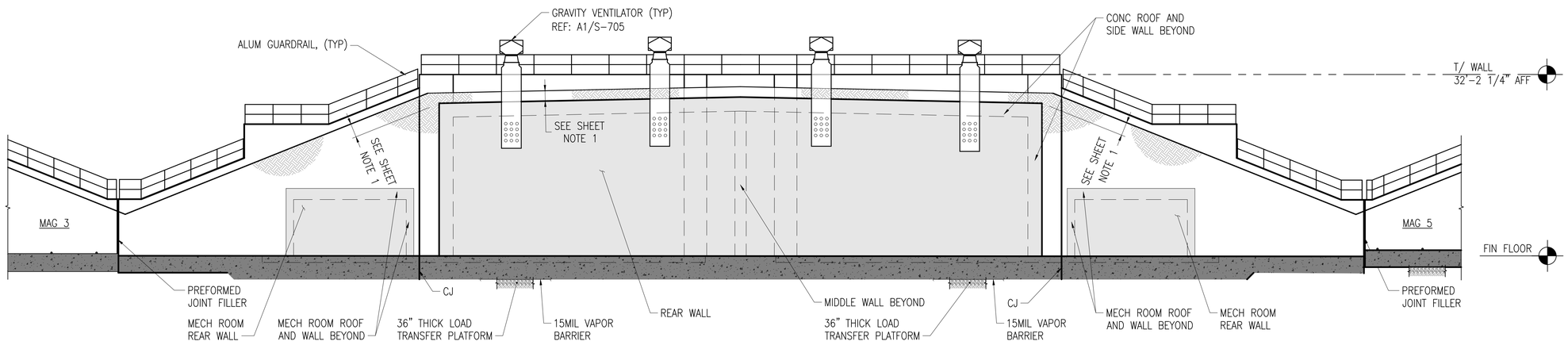

A1 S-101 A1

REAR ELEVATION - MAGAZINE 4

SCALE: 3/32" = 1'-0"

GENERAL SHEET NOTES

1. PROVIDE 2'-0" - 0" /+ 2" OF EMBANKMENT FILL MATERIAL (MINIMUM OF 1'-6" OF EARTH COVER MATERIAL PLUS 6" OF ASTM C33 SAND MATERIAL AT THE ROOF, SIDE, AND REAR WALLS) TO ANY EDGE OF THE MAGAZINE. PROVIDE A NON-WOVEN GEOTEXTILE ROOT BARRIER OVER THE EXTERIOR SURFACE OF THE ASTM C33 SAND.

GRAPHIC SCALES

3/32"=1'-0" 0' 8' 16' 24'

MARK	DESCRIPTION	DATE

SEAL

A/E INFO

APPROVED
Gerard J. Gaudreau, P.E.
FOR COMMANDER NAVFAC 4/22/2026

ACTIVITY
Approved by LCDR VINCE DEL GRECO, ROICC with PWD YORKTOWN, via Email.

SATISFACTORY TO DATE 03/26/2026

DES VAA	DRW MTW	CHK CWJ	
PM/DM	MME/WJW		
BRANCH MANAGER	DLB		
CHIEF ENG/ARCH	JWJ		
FIRE PROTECTION	HPN		

DEPARTMENT OF THE NAVY
NAVAL FACILITIES ENGINEERING SYSTEMS COMMAND
MIDLANT PDC CORE
NAVAL FACILITIES ENGINEERING SYSTEMS COMMAND
NAVAL STATION NORFOLK, VIRGINIA
NAVAL WEAPONS STATION
YORKTOWN, VIRGINIA
P-171 WEAPONS MAGAZINES
BUILDING ELEVATIONS – MAGAZINE 4

SCALE: AS SHOWN
EPROJECT NO.: 1737010
CONSTR. CONTR. NO.: ##
NAVFAC DRAWING NO. 12941976
SHEET 318 OF 499

S201B

DRAWFORM REVISION: 14 SEP 2023

FILE NAME: K:\AYorktown\MILCON\2024_1737010_P171_Weapons_Magazines\B_Design\DWGS - MAGAZINES\Sheet\07_STRUCTS\201\B BUILDING ELEVATIONS - 1B.dwg LAYOUT NAME: S201B BUILDING ELEVATIONS - 1B PLOTTED: Tuesday, March 31, 2026 - 1:49pm USER: mignel.walker

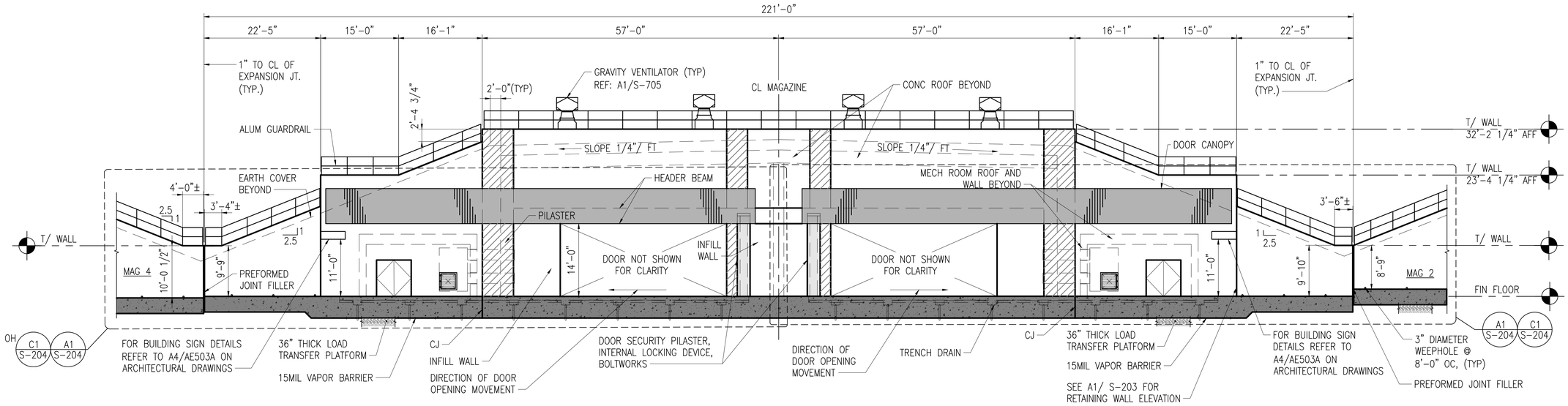

A1 S-101 C1

FRONT ELEVATION - MAGAZINE 3

SCALE: 3/32" = 1'-0"

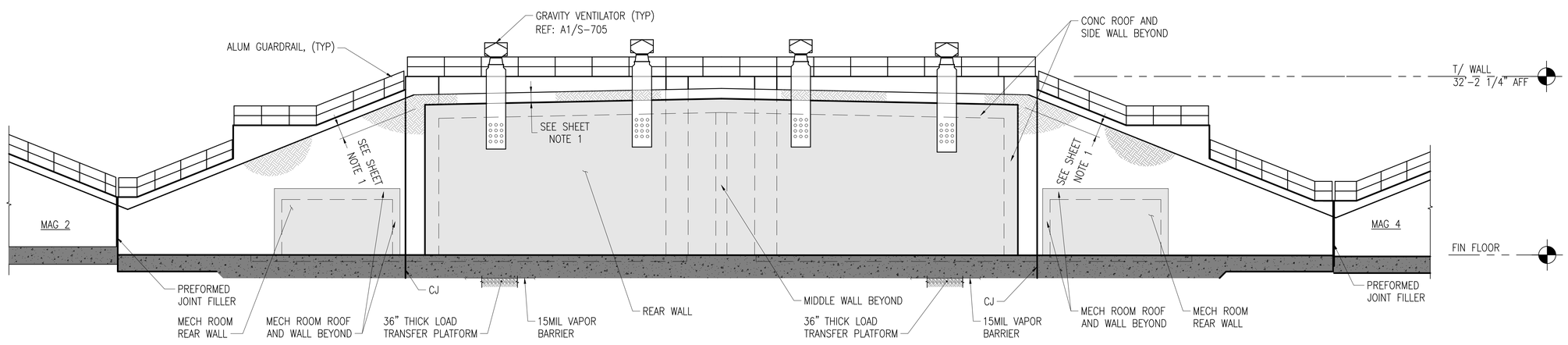

A1 S-101 A1

REAR ELEVATION - MAGAZINE 3

SCALE: 3/32" = 1'-0"

GENERAL SHEET NOTES

1. PROVIDE 2'-0" - 0" /+ 2" OF EMBANKMENT FILL MATERIAL (MINIMUM OF 1'-6" OF EARTH COVER MATERIAL PLUS 6" OF ASTM C33 SAND MATERIAL AT THE ROOF, SIDE, AND REAR WALLS) TO ANY EDGE OF THE MAGAZINE. PROVIDE A NON-WOVEN GEOTEXTILE ROOT BARRIER OVER THE EXTERIOR SURFACE OF THE ASTM C33 SAND.

GRAPHIC SCALES

3/32"=1'-0" 0' 8' 16' 24'

MARK	DESCRIPTION	DATE

SEAL

A/E INFO

APPROVED

FOR COMMANDER NAVFAC

ACTIVITY: Approved by LCDR VINCE DEL GRECO, ROICC with PWD YORKTOWN, via Email.

SATISFACTORY TO DATE 03/26/2026

DES VAA DRW MTW CHK CWJ

PM/DM MME/WJW

BRANCH MANAGER DLB

CHIEF ENG/ARCH JWJ

FIRE PROTECTION HPN

DEPARTMENT OF THE NAVY
NAVAL FACILITIES ENGINEERING SYSTEMS COMMAND
MIDLANT PDC CORE

NAVAL FACILITIES ENGINEERING SYSTEMS COMMAND
NAVAL STATION NORFOLK, VIRGINIA

NAVAL WEAPONS STATION YORKTOWN, VIRGINIA

P-171 WEAPONS MAGAZINES

BUILDING ELEVATIONS – MAGAZINE 3

SCALE: AS SHOWN

EPROJECT NO.: 1737010

CONSTR. CONTR. NO. ##

NAVFAC DRAWING NO. 12941977

SHEET 319 OF 499

S201C

DRAWFORM REVISION: 14 SEP 2023

FILE NAME: K:\AYorktown\MILCON\202A_1737010_P171_Weapons_Magazines\B_Design\DWGS - MAGAZINES\Sheet\07_STRUCTS\201C BUILDING ELEVATIONS - 1C.dwg LAYOUT NAME: S201C BUILDING ELEVATIONS - 1C PLOTTED: Tuesday, March 31, 2026 - 1:49pm USER: miguel.walker

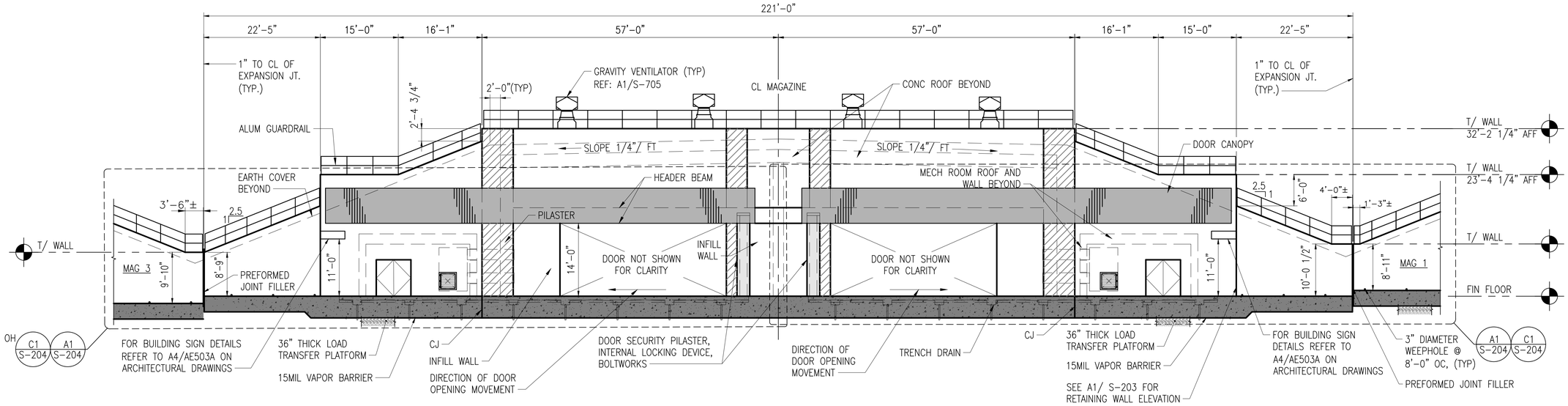

A1 S-101 C1 **FRONT ELEVATION - MAGAZINE 2**

SCALE: 3/32" = 1'-0"

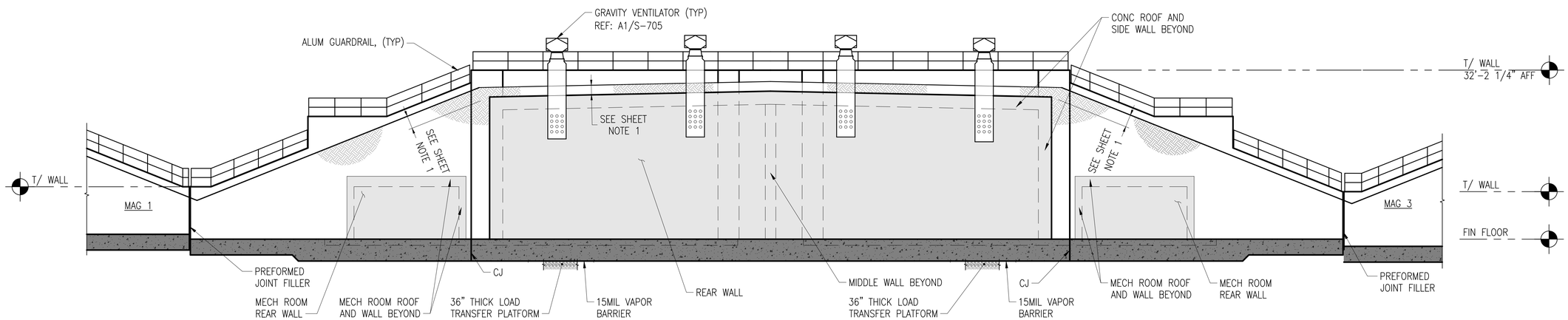

A1 S-101 A1 **REAR ELEVATION - MAGAZINE 2**

SCALE: 3/32" = 1'-0"

GENERAL SHEET NOTES

1. PROVIDE 2'-0" – 0" /+ 2" OF EMBANKMENT FILL MATERIAL (MINIMUM OF 1'-6" OF EARTH COVER MATERIAL PLUS 6" OF ASTM C33 SAND MATERIAL AT THE ROOF, SIDE, AND REAR WALLS) TO ANY EDGE OF THE MAGAZINE. PROVIDE A NON-WOVEN GEOTEXTILE ROOT BARRIER OVER THE EXTERIOR SURFACE OF THE ASTM C33 SAND.

GRAPHIC SCALES

3/32"=1'-0" 0' 8' 16' 24'

MARK	DESCRIPTION	DATE

SEAL

A/E INFO

APPROVED

FOR COMMANDER NAVFAC

ACTIVITY: Approved by LCDR VINCE DEL GRECO, ROICC with PWD YORKTOWN, via Email.

SATISFACTORY TO DATE 03/26/2026

DES VAA | DRW MTW | CHK CWJ

PM/DM MME/WJW

BRANCH MANAGER DLB

CHIEF ENG/ARCH JWJ

FIRE PROTECTION HPN

DEPARTMENT OF THE NAVY
NAVAL FACILITIES ENGINEERING SYSTEMS COMMAND
MIDLANT PDC CORE
NAVAL FACILITIES ENGINEERING SYSTEMS COMMAND
NAVAL STATION NORFOLK, VIRGINIA
NAVAL WEAPONS STATION YORKTOWN, VIRGINIA
P-171 WEAPONS MAGAZINES
BUILDING ELEVATIONS – MAGAZINE 2

SCALE: AS SHOWN

EPROJECT NO.: 1737010

CONSTR. CONTR. NO. ##

NAVFAC DRAWING NO. 12941978

SHEET 320 OF 499

S201D

DRAWFORM REVISION: 14 SEP 2023

FILE NAME: K:\VA\Yorktown\MILCON\2024_1737010_P171_Weapons_Magazines\B_Design\DWGS - MAGAZINE\Sheet\07_STRUCT\S201\D BUILDING ELEVATIONS - 1D (BID OPTION).dwg LAYOUT NAME: S201\D BUILDING ELEVATIONS - 1D (BID OPTION) PLOTTED: Tuesday, March 31, 2026 - 1:49pm USER: miguel.walker

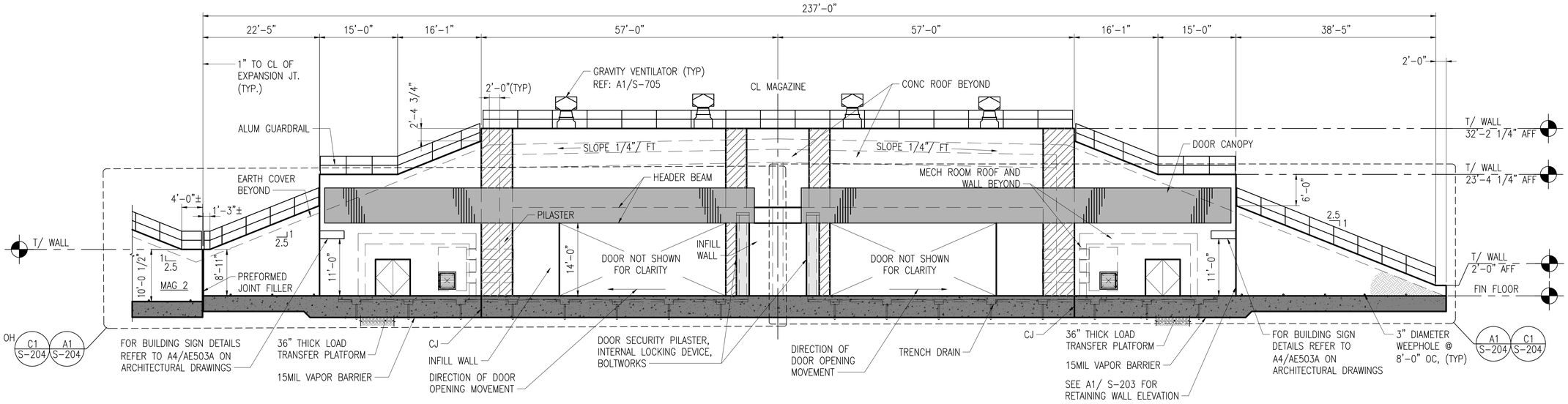

A1 S-101 C1 **FRONT ELEVATION - MAGAZINE 1**

SCALE: 3/32" = 1'-0"

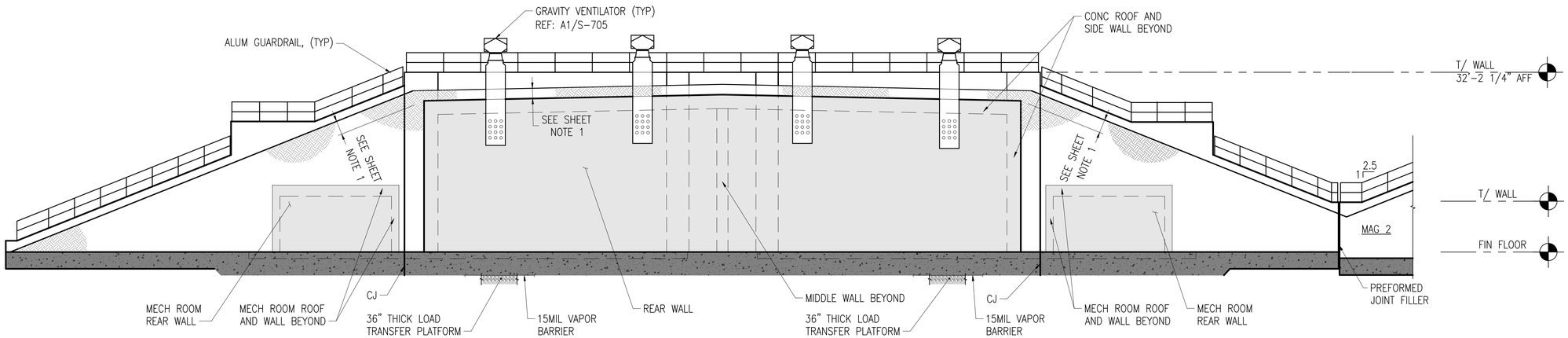

A1 S-101 A1 **REAR ELEVATION - MAGAZINE 1**

SCALE: 3/32" = 1'-0"

GENERAL SHEET NOTES

1. PROVIDE 2'-0" - 0" /+ 2" OF EMBANKMENT FILL MATERIAL (MINIMUM OF 1'-6" OF EARTH COVER MATERIAL PLUS 6" OF ASTM C33 SAND MATERIAL AT THE ROOF, SIDE, AND REAR WALLS) TO ANY EDGE OF THE MAGAZINE. PROVIDE A NON-WOVEN GEOTEXTILE ROOT BARRIER OVER THE EXTERIOR SURFACE OF THE ASTM C33 SAND.

GRAPHIC SCALES

3/32"=1'-0" 0' 8' 16' 24'

MARK	DESCRIPTION	DATE

SEAL

A/E INFO

APPROVED

FOR COMMANDER NAVFAC

ACTIVITY: Approved by LCDR VINCE DEL GRECO, ROICC with PWD YORKTOWN, via Email.

SATISFACTORY TO DATE 03/26/2026

DES VAA | DRW MTW | CHK CWJ

PM/DM MME/WJW

BRANCH MANAGER DLB

CHIEF ENG/ARCH JWJ

FIRE PROTECTION HPN

DEPARTMENT OF THE NAVY
NAVAL FACILITIES ENGINEERING SYSTEMS COMMAND
MIDLANT PDC CORE
NAVAL FACILITIES ENGINEERING SYSTEMS COMMAND
NAVAL STATION NORFOLK, VIRGINIA
NAVAL WEAPONS STATION
YORKTOWN, VIRGINIA
P-171 WEAPONS MAGAZINES
BUILDING ELEVATIONS - MAGAZINE 1

SCALE: AS SHOWN

EPROJECT NO.: 1737010

CONSTR. CONTR. NO. ##

NAVFAC DRAWING NO. 12941979

SHEET 321 OF 499

S201E

DRAWFORM REVISION: 14 SEP 2023

FILE NAME: K:\VA\Yorktown\MILCON\2024_1737010_P171_Weapons_Magazines\B_Design\DWGS - MAGAZINE\Sheet\07_STRUCTS\201OE BUILDING ELEVATIONS - 1 (BID OPTION).dwg LAYOUT NAME: S201OE BUILDING ELEVATIONS - 1 (BID OPTION), PLOTTED: Tuesday, March 31, 2026 - 1:49pm USER: miguel.walker

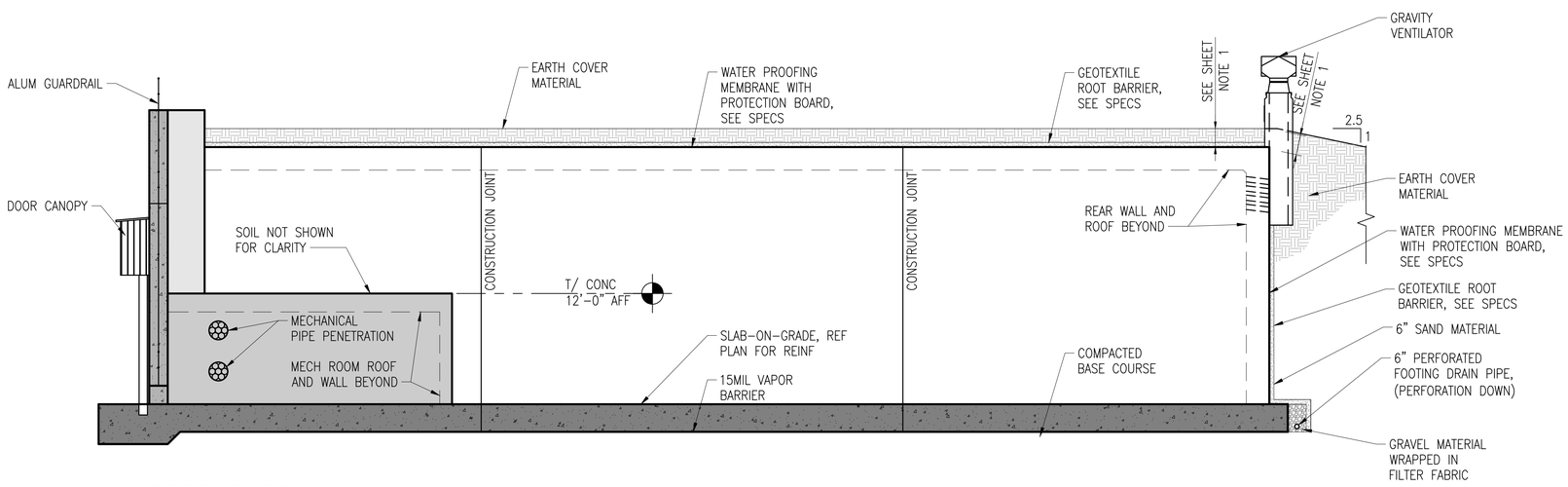

A1 S-101 (A1) SIDE ELEVATION
SCALE: 1/8" = 1'-0"

GENERAL SHEET NOTES

1. PROVIDE 2'-0" - 0" /+ 2" OF EMBANKMENT FILL MATERIAL (MINIMUM OF 1'-6" OF EARTH COVER MATERIAL PLUS 6" OF ASTM C33 SAND MATERIAL AT THE ROOF, SIDE, AND REAR WALLS) TO ANY EDGE OF THE MAGAZINE. PROVIDE A NON-WOVEN GEOTEXTILE ROOT BARRIER OVER THE EXTERIOR SURFACE OF THE ASTM C33 SAND.

GRAPHIC SCALES
SCALE: 1/8" = 1'-0"
0 4' 8' 16'

MARK	DESCRIPTION	DATE

NAVFAC

SEAL

A/E INFO

APPROVED
FOR COMMANDER NAVFAC

ACTIVITY
Approved by LCDR VINCE DEL GRECO, ROICC with PWD YORKTOWN, via Email.

SATISFACTORY TO DATE	03/26/2026
DES VAA	DRW MTW / CHK CWJ
PM/DM	MME/WJW
BRANCH MANAGER	DLB
CHIEF ENG/ARCH	JWJ
FIRE PROTECTION	HPN

DEPARTMENT OF THE NAVY
NAVAL FACILITIES ENGINEERING SYSTEMS COMMAND
MIDLANT PDC CORE
NAVAL FACILITIES ENGINEERING SYSTEMS COMMAND
NAVAL STATION NORFOLK, VIRGINIA
NAVAL WEAPONS STATION
YORKTOWN, VIRGINIA
P-171 WEAPONS MAGAZINES
BUILDING ELEVATIONS - 2

SCALE:	AS SHOWN
EPROJECT NO.:	1737010
CONSTR. CONTR. NO.	##
NAVFAC DRAWING NO.	12941980
SHEET	322 OF 499

S-202

DRAWFORM REVISION: 14 SEP 2023

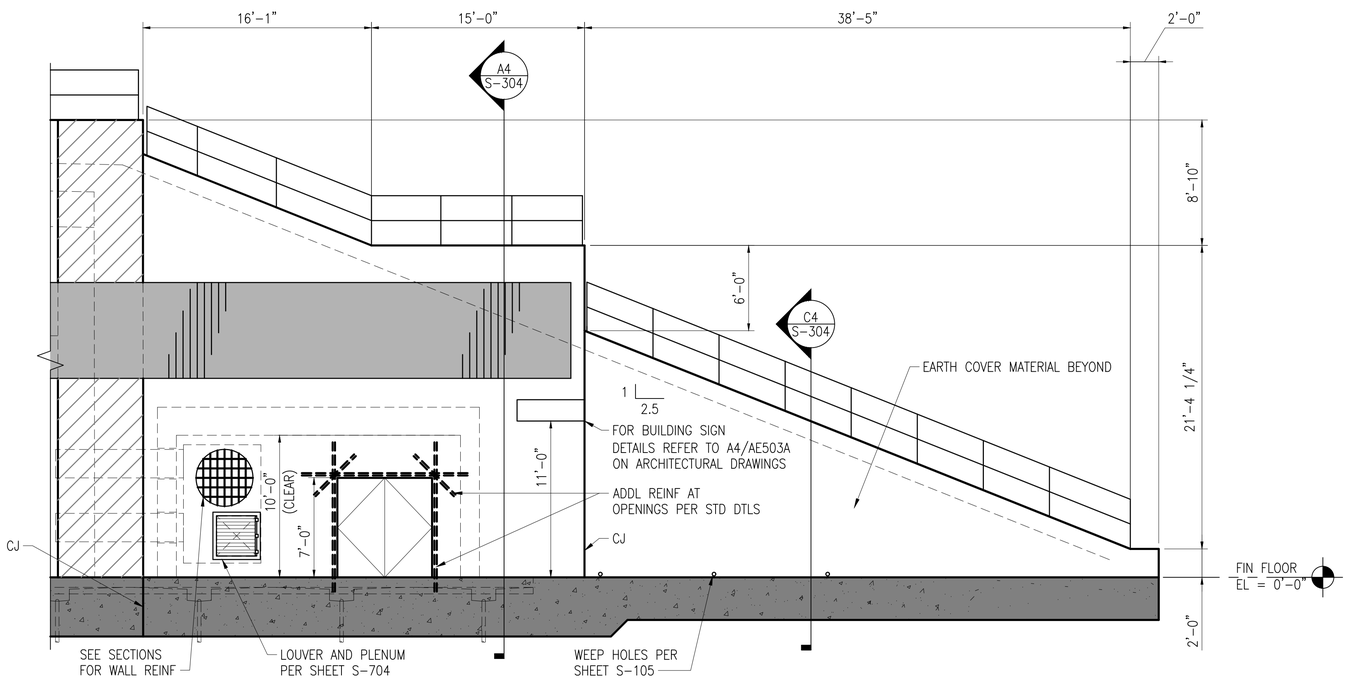

A1
S-101
A1

RETAINING WALL ELEVATION

SCALE: 3/16" = 1'-0"

GENERAL SHEET NOTES

1. PROVIDE 2'-0" – 0" /+ 2" OF EMBANKMENT FILL MATERIAL (MINIMUM OF 1'-0" OF EARTH COVER MATERIAL PLUS 1'-0" OF ASTM C33 SAND MATERIAL AT THE ROOF PANEL, AND 2'-0" OF ASTM C33 SAND MATERIAL AT THE SIDE AND REAR WALLS) TO ANY EDGE OF THE MAGAZINE (ROOF PANEL, SIDE WALL, REAR WALL). PROVIDE 2'-0" ASTM C33 SAND MATERIAL TO THE REAR OF THE RETAINING WALL. PROVIDE A NON-WOVEN GEOTEXTILE ROOT BARRIER OVER THE EXTERIOR SURFACE OF THE ASTM C33 SAND.

GRAPHIC SCALES

3/16"=1'-0" 0' 4' 8' 12'

MARK	DESCRIPTION	DATE

SEAL

A/E INFO

APPROVED

FOR COMMANDER NAVFAC

ACTIVITY
Approved by LCDR VINCE DEL GRECO, ROICC with PWD YORKTOWN, via Email.

SATISFACTORY TO DATE 03/26/2026

DES VAA	DRW MTW	CHK CWJ	
PM/DM	MME/WJW		
BRANCH MANAGER	DLB		
CHIEF ENG/ARCH	JWJ		
FIRE PROTECTION	HPN		

DEPARTMENT OF THE NAVY
NAVAL FACILITIES ENGINEERING SYSTEMS COMMAND
MIDLANT PDC CORE

NAVAL FACILITIES ENGINEERING SYSTEMS COMMAND
NAVAL STATION NORFOLK, VIRGINIA

NAVAL WEAPONS STATION
YORKTOWN, VIRGINIA

P-171 WEAPONS MAGAZINES

RETAINING WALL ELEVATIONS

SCALE: AS SHOWN
EPROJECT NO.: 1737010
CONSTR. CONTR. NO. ##
NAVFAC DRAWING NO. 12941981
SHEET 323 OF 499

S-203

DRAWFORM REVISION: 14 SEP 2023

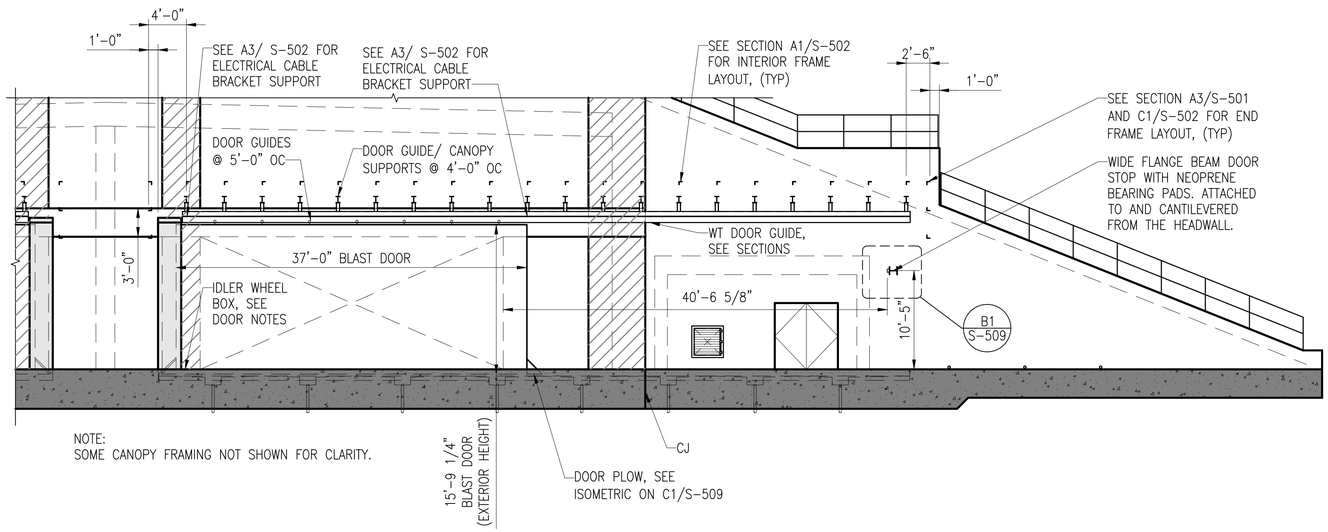

C1 S-201 (C1) ELEVATION - DOOR IN CLOSED POSITION

SCALE: 1/8" = 1'-0"

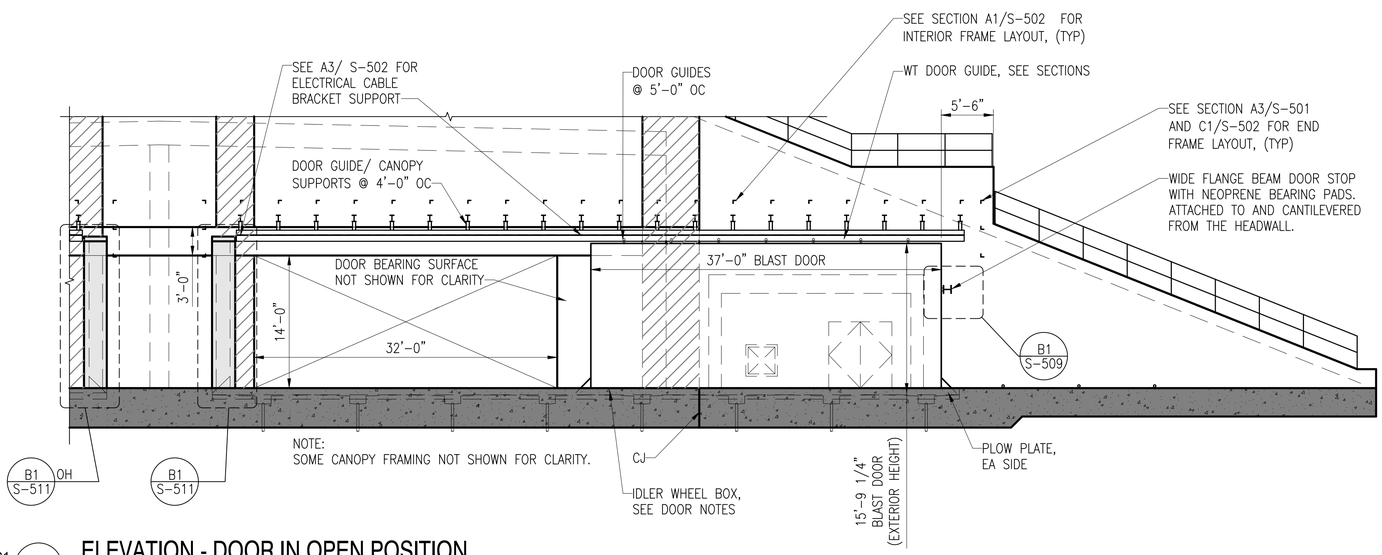

C1 S-201 (A1) ELEVATION - DOOR IN OPEN POSITION

SCALE: 1/8" = 1'-0"

GENERAL SHEET NOTES

1. THE MAGAZINE BLAST DOOR MUST BE A SLIDING STEEL DOOR SUPPORTED FROM THE BOTTOM OF THE DOOR BY WHEELS LOCATED AT EACH END OF THE DOOR.
2. DOOR SYSTEM WILL BE TRACTION DRIVEN. THE LEADING EDGE (DOOR OPENING) WHEEL BOX CONTAINS BOTH A WHEEL AND A CHAIN DRIVEN POWER SYSTEM. THE TRAILING EDGE WHEEL BOX IS NOT POWERED AND ONLY CONTAINS AN IDLER WHEEL.
3. DOOR SYSTEM MUST INCLUDE A HAND-CRANKED MANUAL PULL SYSTEM OVERRIDE INCLUDING CHAIN DISENGAGEMENT THAT IS CAPABLE OF BOTH OPENING AND CLOSING THE DOOR SYSTEM.
4. DOOR MFR MUST SUBMIT A COMPLETE OPERATIONS & MAINTENANCE MANUAL TO THE CONTRACTING OFFICER FOR APPROVAL AND MUST ALSO SUBMIT A FINAL APPROVED OPERATIONS & MAINTENANCE MANUAL FOR RECORD.

GRAPHIC SCALES

1/8"=1'-0" 0' 4' 8' 16'

MARK	DESCRIPTION	DATE

NAVFAC

SEAL

A/E INFO

APPROVED

FOR COMMANDER NAVFAC

ACTIVITY: Approved by LCDR VINCE DEL GRECO, ROICC with PWD YORKTOWN, via Email.

SATISFACTORY TO DATE 03/26/2026

DES VAA | DRW MTW | CHK CWJ

PM/DM MME/WJW

BRANCH MANAGER DLB

CHIEF ENG/ARCH JWJ

FIRE PROTECTION HPN

DEPARTMENT OF THE NAVY
NAVAL FACILITIES ENGINEERING SYSTEMS COMMAND
MIDLANT PDC CORE

NAVAL FACILITIES ENGINEERING SYSTEMS COMMAND
NAVAL STATION NORFOLK, VIRGINIA

NAVAL WEAPONS STATION YORKTOWN, VIRGINIA

P-171 WEAPONS MAGAZINES

FRONT WALL PARTIAL ELEVATIONS

SCALE: AS SHOWN

EPROJECT NO.: 1737010

CONSTR. CONTR. NO. ##

NAVFAC DRAWING NO. 12941982

SHEET 324 OF 499

S-204

DRAWFORM REVISION: 14 SEP 2023

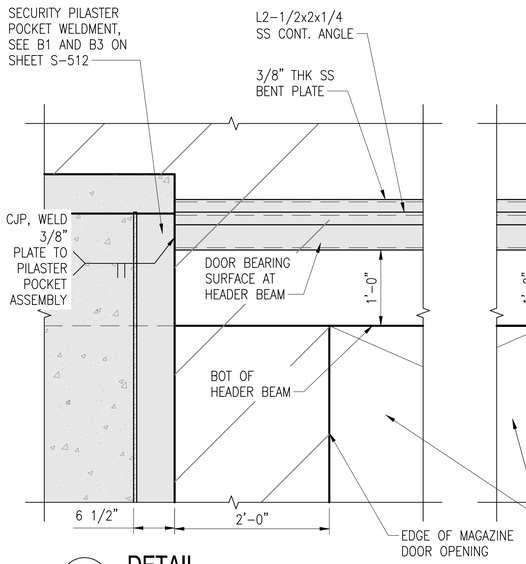

A1 C1 S-205 **DETAIL**
SCALE: 1" = 1'-0"

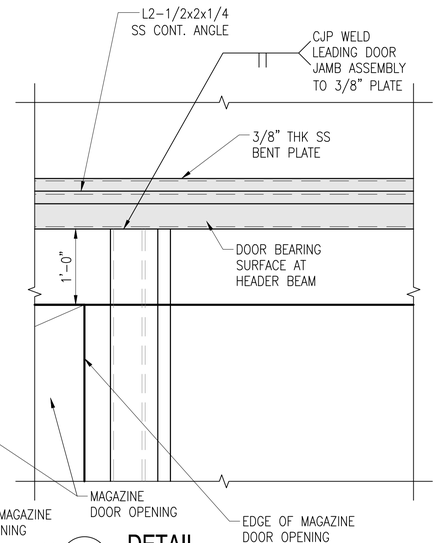

A1 C2 S-205 **DETAIL**
SCALE: 1" = 1'-0"

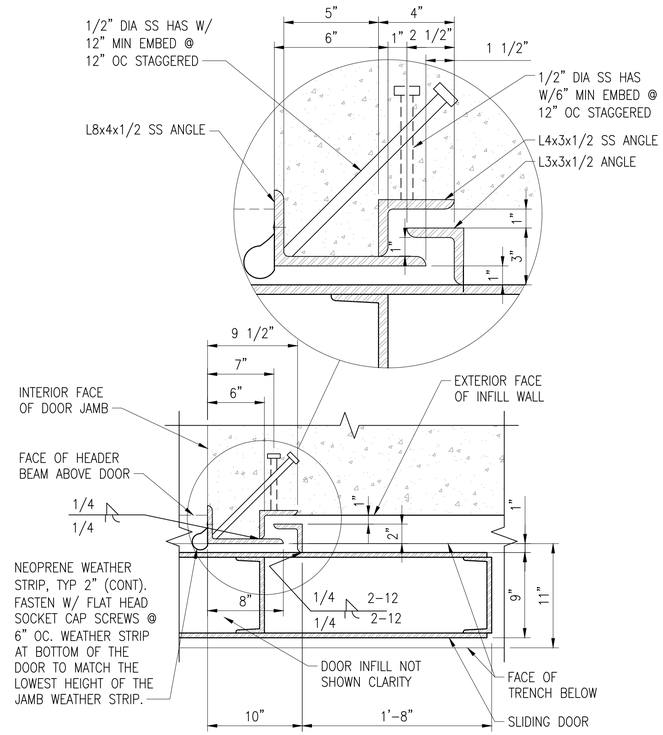

A1 C3 S-205 **LEADING DOOR EDGE JAMB DETAIL**
SCALE: 1 1/2" = 1'-0"

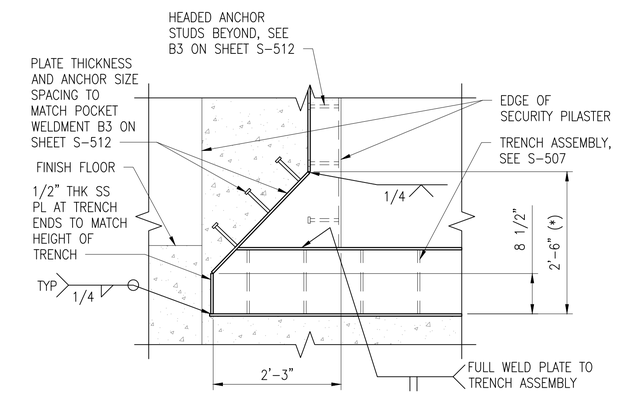

1. DIMENSIONS NOTED WITH AN (*) MUST BE COORDINATED BY THE DOOR MANUFACTURER ENSURING THE DOOR SYSTEM PERFORMS PER THE BLAST DOOR NOTES ON SHEET S-003.
2. SEE SHEETS S-507, S-508, S-511 AND S-512 FOR INFORMATION NOT SHOWN.

A1 C4 S-205 **SECURITY PILASTER POCKET AT DOOR PLOW**
SCALE: 3/4" = 1'-0"

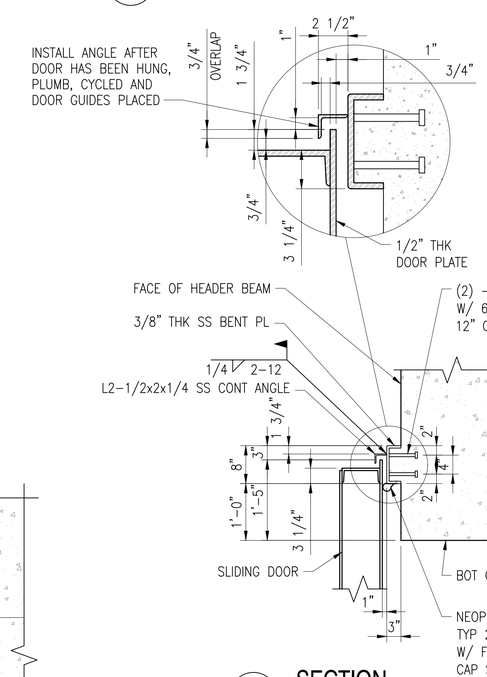

A1 A5 S-205 **SECTION**
SCALE: 3/4" = 1'-0"

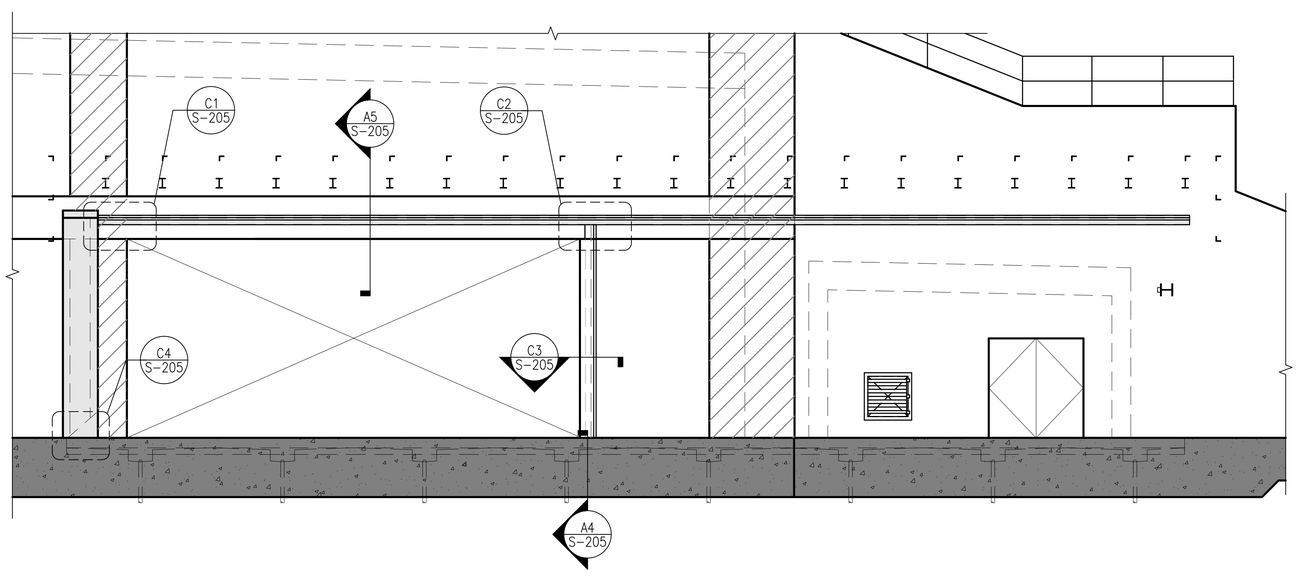

NOTE:
SOME CANOPY FRAMING NOT SHOWN FOR CLARITY.

A1 **ELEVATION - DOOR BEARING SURFACES**
SCALE: 3/16" = 1'-0"

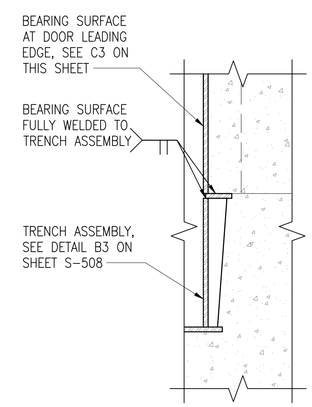

A1 A4 S-205 **LEADING DOOR JAMB AT TRENCH**
SCALE: 1 1/2" = 1'-0"

GRAPHIC SCALES

SCALE: 3/16" = 1'-0" 0 4' 8' 16'
SCALE: 3/4" = 1'-0" 0 1' 2' 4'
SCALE: 1" = 1'-0" 0 6" 1' 2'
SCALE: 1 1/2" = 1'-0" 0 6" 1' 2'

MARK	DESCRIPTION	DATE

NAVFAC

SEAL

A/E INFO

APPROVED
FOR COMMANDER NAVFAC

ACTIVITY
Approved by LCDR VINCE DEL GRECO, ROICC with PWD YORKTOWN, via Email.

SATISFACTORY TO DATE 03/26/2026

DES VAA	DRW MTW	CHK CWJ	
PM/DM	MME/WJW		
BRANCH MANAGER	DLB		
CHIEF ENG/ARCH	JWJ		
FIRE PROTECTION	HPN		

DEPARTMENT OF THE NAVY
NAVAL FACILITIES ENGINEERING SYSTEMS COMMAND
MIDLANT PDC CORE

NAVAL FACILITIES ENGINEERING SYSTEMS COMMAND
NAVAL STATION NORFOLK, VIRGINIA

NAVAL WEAPONS STATION
YORKTOWN, VIRGINIA

P-171 WEAPONS MAGAZINES

FRONT WALL PARTIAL ELEVATION AND DETAILS

SCALE: AS SHOWN
EPROJECT NO.: 1737010
CONSTR. CONTR. NO. ##
NAVFAC DRAWING NO. 12941983
SHEET 325 OF 499

S-205

DRAWFORM REVISION: 14 SEP 2023

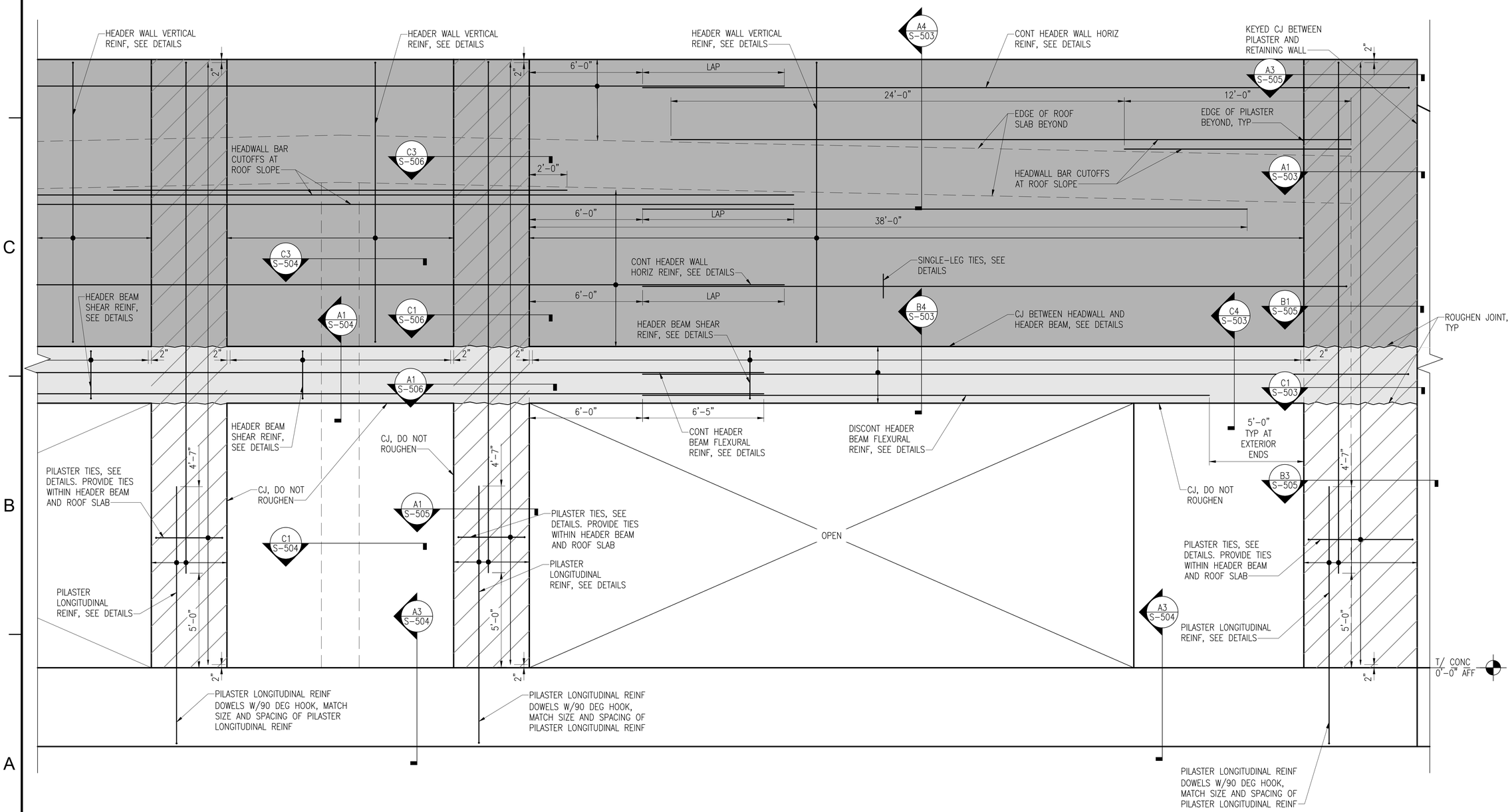

A1 ELEVATION - HEADWALL, HEADER BEAM, PILASTER REINFORCING

SCALE: 3/8" = 1'-0"

GRAPHIC SCALES

SCALE: 3/8 = 1'-0" 0 2' 4' 8'

MARK	DESCRIPTION	DATE

NAVFAC

SEAL

A/E INFO

APPROVED
James E. Donahue, R.A.

FOR COMMANDER NAVFAC

ACTIVITY
Approved by LCDR VINCE DEL GRECO, ROICC with PWD YORKTOWN, via Email.

SATISFACTORY TO DATE 03/26/2026

DES	VAA	DRW MTW	CHK CWJ
PM/DM	MME/WJW		
BRANCH MANAGER	DLB		
CHIEF ENG/ARCH	JWJ		
FIRE PROTECTION	HPN		

DEPARTMENT OF THE NAVY
NAVAL FACILITIES ENGINEERING SYSTEMS COMMAND
MIDLANT PDC CORE

NAVAL FACILITIES ENGINEERING SYSTEMS COMMAND
NAVAL STATION NORFOLK, VIRGINIA

NAVAL WEAPONS STATION
YORKTOWN, VIRGINIA

P-171 WEAPONS MAGAZINES

HEADWALL, HEADER BEAM, PILASTER EL

SCALE: AS SHOWN

EPROJECT NO.: 1737010

CONSTR. CONTR. NO. ##

NAVFAC DRAWING NO. 12941984

SHEET 326 OF 499

S-206

DRAWFORM REVISION: 14 SEP 2023

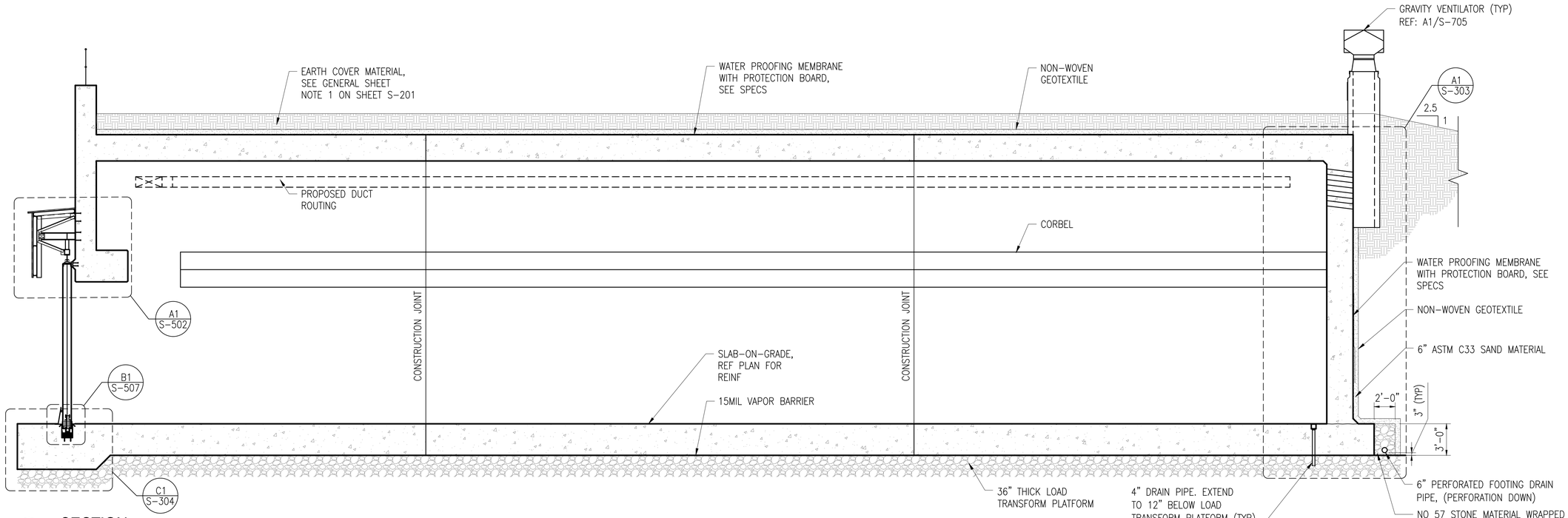

A1 S-101 C1 **SECTION**
SCALE: 3/16" = 1'-0"

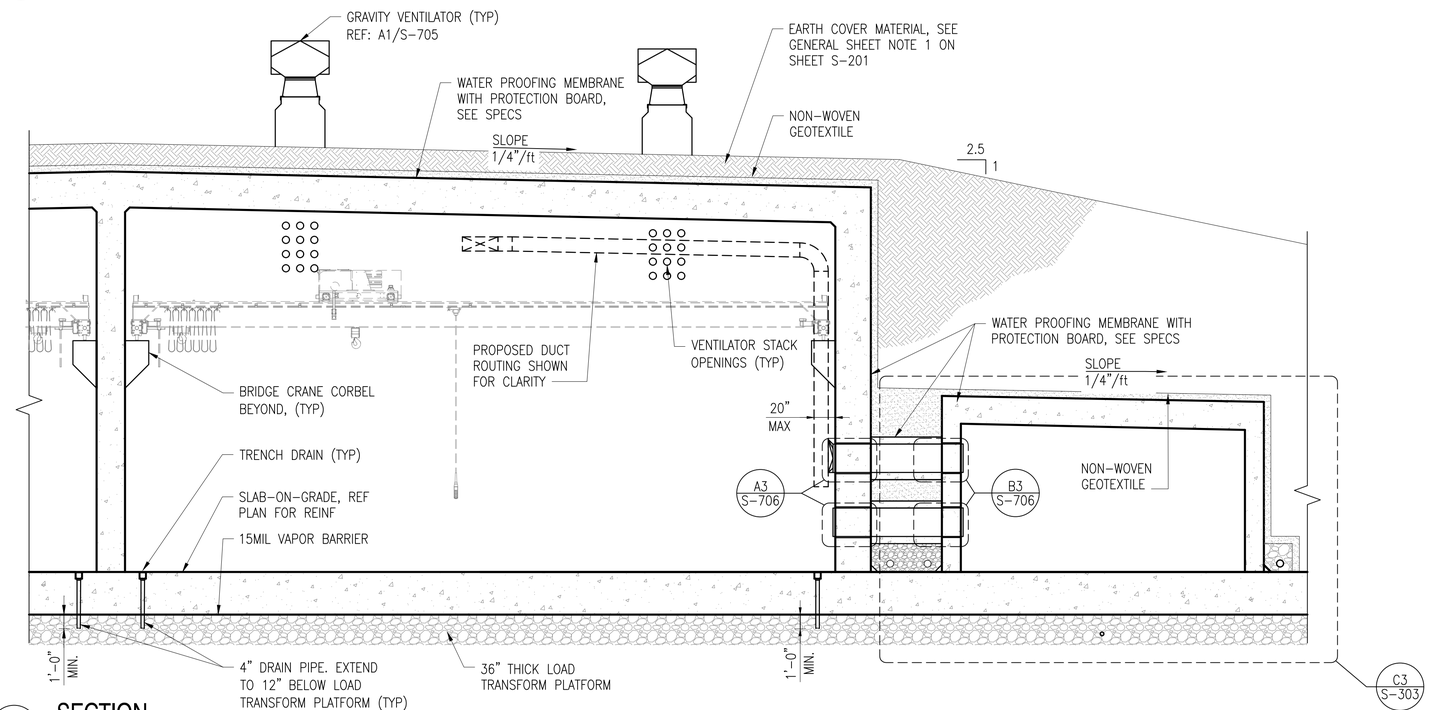

A1 S-101 A1 **SECTION**
SCALE: 3/16" = 1'-0"

GRAPHIC SCALES
SCALE: 3/16" = 1'-0" 0 4' 8' 16'

MARK	DESCRIPTION	DATE

NAVFAC

SEAL

A/E INFO

APPROVED
FOR COMMANDER NAVFAC

ACTIVITY
Approved by LCDR VINCE DEL GRECO, ROICC with PWD YORKTOWN, via Email.

SATISFACTORY TO DATE 03/26/2026

DES VAA | DRWN MTW | CHK CWJ
PM/DM MME/WJW
BRANCH MANAGER DLB
CHIEF ENG/ARCH JWJ
FIRE PROTECTION HPN

DEPARTMENT OF THE NAVY
NAVAL FACILITIES ENGINEERING SYSTEMS COMMAND
MIDLANT PDC CORE
NAVAL FACILITIES ENGINEERING SYSTEMS COMMAND
NAVAL STATION NORFOLK, VIRGINIA
NAVAL WEAPONS STATION
YORKTOWN, VIRGINIA
P-171 WEAPONS MAGAZINES
BUILDING SECTIONS

SCALE: AS SHOWN
EPROJECT NO.: 1737010
CONSTR. CONTR. NO. ##
NAVFAC DRAWING NO. 12941985
SHEET 327 OF 499
S-301

DRAWFORM REVISION: 14 SEP 2023

GRAVITY VENTILATOR (TYP)
REF: A1/S-705

WATER PROOFING MEMBRANE WITH PROTECTION BOARD, SEE SPECS

EARTH COVER MATERIAL, SEE GENERAL SHEET NOTE 1 ON SHEET S-201

6" ASTM C33 SAND

SLOPE

SLOPE

LAP

35'-0"

LAP

5'-0"

NON-WOVEN GEOTEXTILE

SEE PLAN FOR ROOF FRAMING

1" CHAMFER

(12) - #10 CONT, EQ SPA IN TIE

90 DEG HOOK

#4@8 CLOSED TIE

#9@8 DIAG REINF

#9@8 DIAG REINF

#11@8

#9@8

4'-6"

4'-6"

4'-6"

4'-6"

CJ

PROPOSED DUCT ROUTING SHOWN FOR CLARITY

VENTILATOR STACK OPENINGS (TYP)

4"x4" CHAMFER AT WALL TO ROOF JOINT, (TYP)

4" MIN CLEARANCE

7'-0" MAX BRIDGE CRANE SYSTEM HEIGHT

#9@8

#11@8

4'-6"

4'-6"

TOP OF CORBEL
ELEV = 16'- 4"

EYE OF HOOK

A1
S-305

25'-8" CLEAR

16'-0" MIN HOOK HEIGHT

17'-0" MIN CLEARANCE BETWEEN FINISH FLOOR ELEVATION AND BOTTOM OF BRIDGE CRANE GIRDER

24'-7 1/2" CLEAR

CL LAP

LAP

WATER PROOFING MEMBRANE WITH PROTECTION BOARD, SEE SPECS

MIDDLE WALL

A3
S-305

OH

#3@8 SHEAR STIRRUPS AT BOT 13 LAYERS OF WALL REINF, STAGGER HOOKS

MID WALL HEIGHT
12'-3 3/4"

6" (MIN)
ASTM C33 SAND

NON-WOVEN GEOTEXTILE

ADDITIONAL BAR AT TRENCH DRAIN BLOCKOUT, MATCH SLAB REINF SIZE AND SPACING

ROUGHEN JOINT, (TYP)

TRENCH DRAIN (TYP)

90° STD HK

#6@8

SLAB-ON-GRADE, REF PLAN FOR REINF

2'-0"

LAP

LAP

LAP

3'-0"

3" (TYP)

8" PERFORATED FOOTING DRAIN PIPE, (PERFORATION DOWN)

36" THICK LOAD TRANSFER PLATFORM

4" DRAIN PIPE. EXTEND TO 12" BELOW LOAD TRANSFORM PLATFORM (TYP)

4" DRAIN PIPE. EXTEND TO 12" BELOW LOAD TRANSFORM PLATFORM (TYP)

NO 57 STONE MATERIAL WRAPPED IN NON-WOVEN GEOTEXTILE

15MIL VAPOR BARRIER

#9@8" SLAB REINF OC

90 DEG STD HOOKS

A1
S-101 A1 SECTION
SCALE: 3/8" = 1'-0"

GRAPHIC SCALES
SCALE: 3/8" = 1'-0" 0 2' 4' 8'

MARK	DESCRIPTION	DATE

NAVFAC

SEAL

A/E INFO

APPROVED
FOR COMMANDER NAVFAC

ACTIVITY
Approved by LCDR VINCE DEL GRECO, ROICC with PWD YORKTOWN, via Email.

SATISFACTORY TO DATE 03/26/2026

DES	VAA	DRW MTW	CHK CWJ
PM/DM	MME/WJW		
BRANCH MANAGER	DLB		
CHIEF ENG/ARCH	JWJ		
FIRE PROTECTION	HPN		

DEPARTMENT OF THE NAVY
NAVAL FACILITIES ENGINEERING SYSTEMS COMMAND
MIDLANT PDC CORE

NAVAL FACILITIES ENGINEERING SYSTEMS COMMAND
NAVAL STATION NORFOLK, VIRGINIA

NAVAL WEAPONS STATION
YORKTOWN, VIRGINIA

P-171 WEAPONS MAGAZINES

WALL SECTIONS - 1

SCALE: AS SHOWN
EPROJECT NO.: 1737010
CONSTR. CONTR. NO. ##
NAVFAC DRAWING NO. 12941986
SHEET 328 OF 499

S-302

DRAWFORM REVISION: 14 SEP 2023

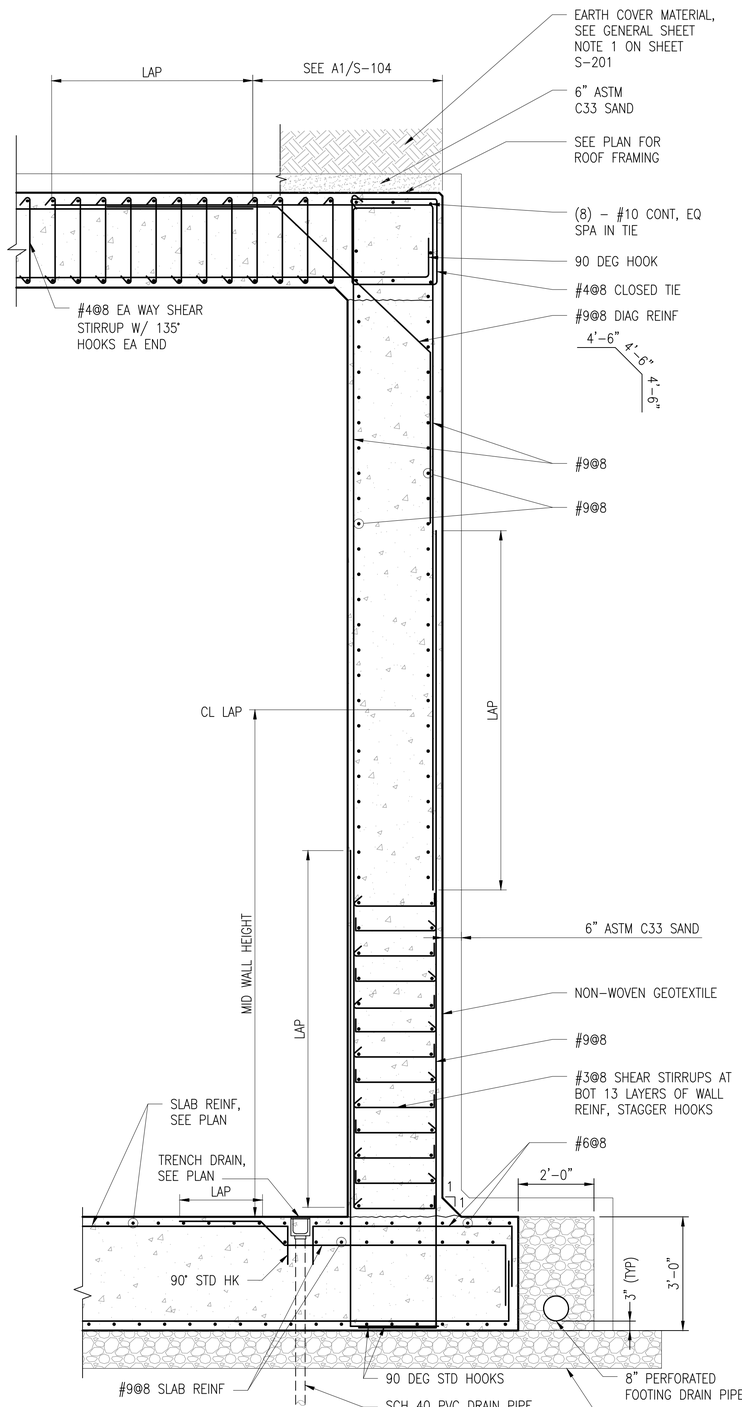

C1 / S-301 — A1 **SECTION**
SCALE: 1/2" = 1'-0"

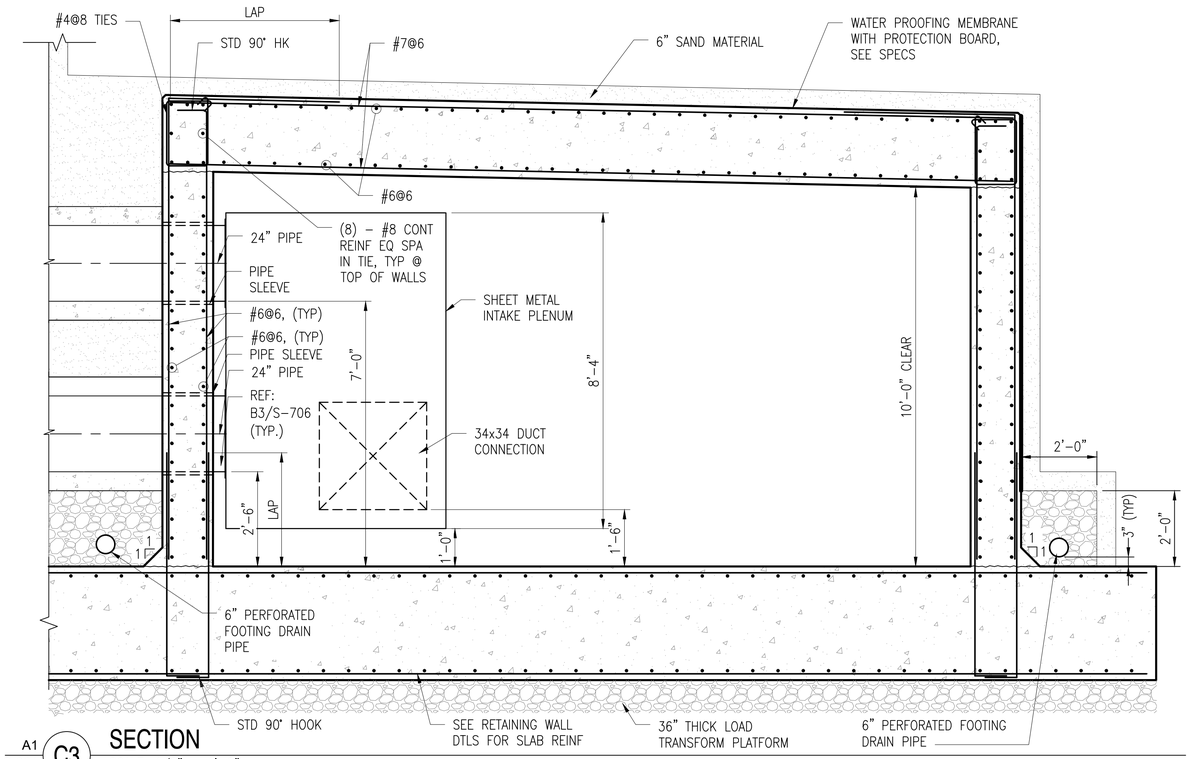

A1 / S-301 — C3 **SECTION**
SCALE: 1/2" = 1'-0"

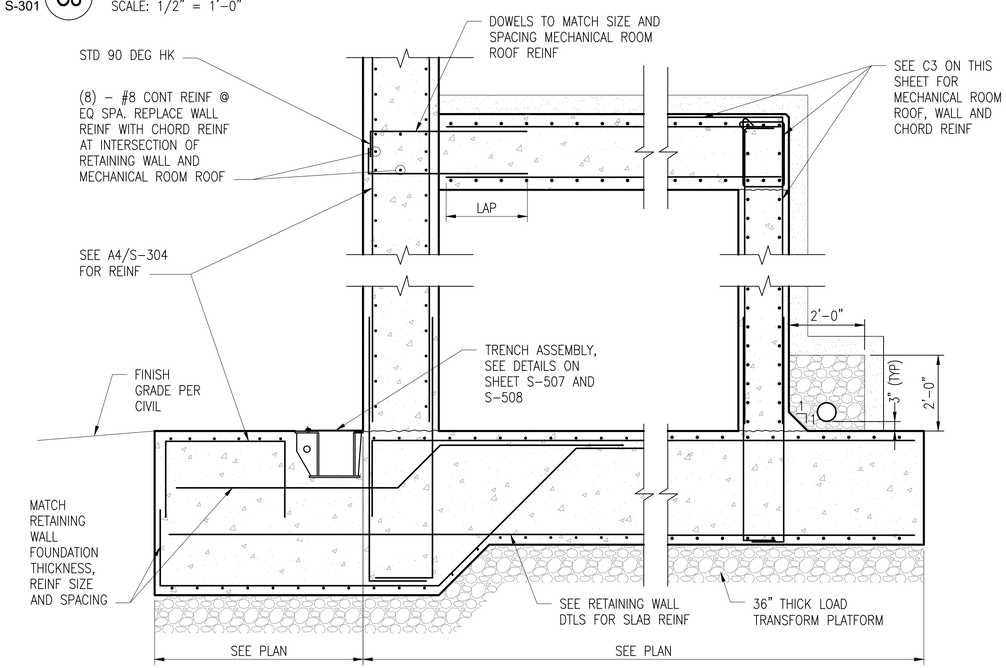

A1 / S-403 — A3 **SECTION**
SCALE: 1/2" = 1'-0"

GRAPHIC SCALES
SCALE: 1/2" = 1'-0"
0 1' 2' 4'

MARK	DESCRIPTION	DATE

NAVFAC

SEAL

A/E INFO

APPROVED
FOR COMMANDER NAVFAC

ACTIVITY
Approved by LCDR VINCE DEL GRECO, ROICC with PWD YORKTOWN, via Email.
SATISFACTORY TO DATE 03/26/2026

DES VAA	DRW MTW	CHK CWJ	
PM/DM	MME/WJW		
BRANCH MANAGER	DLB		
CHIEF ENG/ARCH	JWJ		
FIRE PROTECTION	HPN		

DEPARTMENT OF THE NAVY
NAVAL FACILITIES ENGINEERING SYSTEMS COMMAND
MIDLANT PDC CORE
NAVAL FACILITIES ENGINEERING SYSTEMS COMMAND
NAVAL STATION NORFOLK, VIRGINIA
NAVAL WEAPONS STATION
YORKTOWN, VIRGINIA
P-171 WEAPONS MAGAZINES
WALL SECTIONS – 2

SCALE: AS SHOWN
EPROJECT NO.: 1737010
CONSTR. CONTR. NO. ##
NAVFAC DRAWING NO. 12941987
SHEET 329 OF 499
S-303

DRAWFORM REVISION: 14 SEP 2023

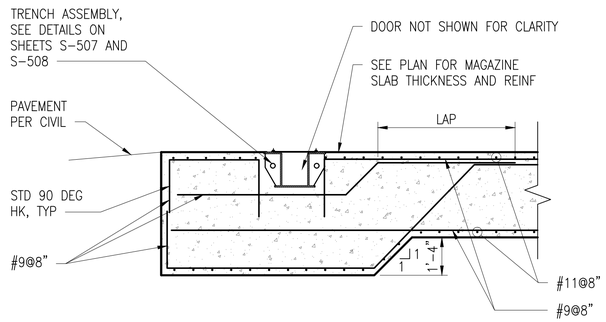

C1 / S-301 **C1** REINF. AT MAGAZINE DOOR / TRENCH
SCALE: 3/8" = 1'-0'

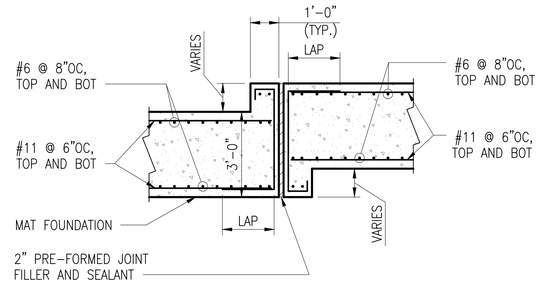

C1 / S-201A **C3** JOINT DETAIL
SCALE: 3/8" = 1'-0"

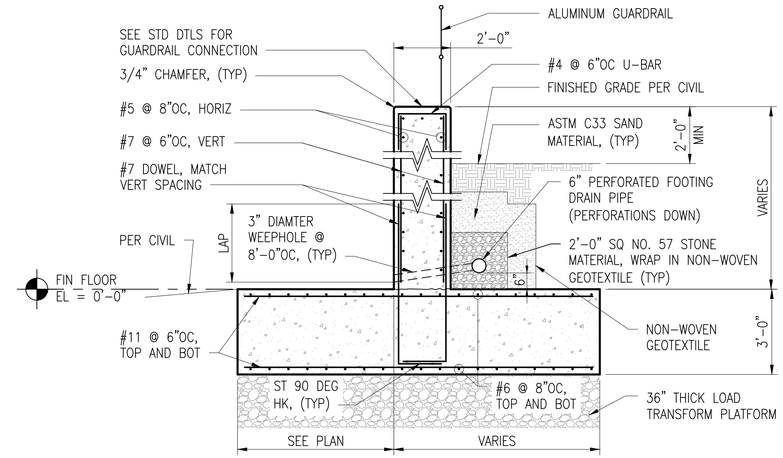

A1 / S-403 **C4** RETAINING WALL SECTION
SCALE: 3/8" = 1'-0"

NOTES;

1. THIS DETAIL PROVIDES A GENERAL LAYOUT FOR BOTH THE END PILASTER AND INTERIOR PILASTER. SEE DETAILS ON SHEETS S-503, S-505 AND S-506 FOR MORE INFORMATION.
2. THE SIDE WALL AT THE END PILASTER IS NOT SHOWN FOR CLARITY.
3. THE DIAGONAL BAR IS ONLY REQUIRED AT THE INTERIOR PILASTERS, AND CAN BE OMITTED AT END PILASTERS.

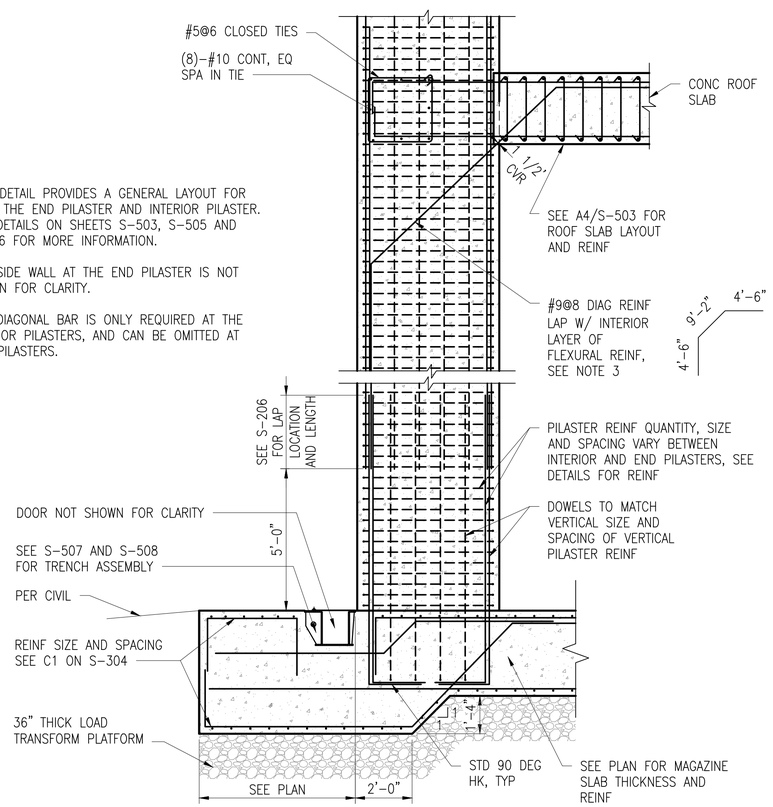

A1 / S-103 **A1** BLAST PILASTER REINFORCEMENT SECTION
SCALE: 3/8" = 1'-0"

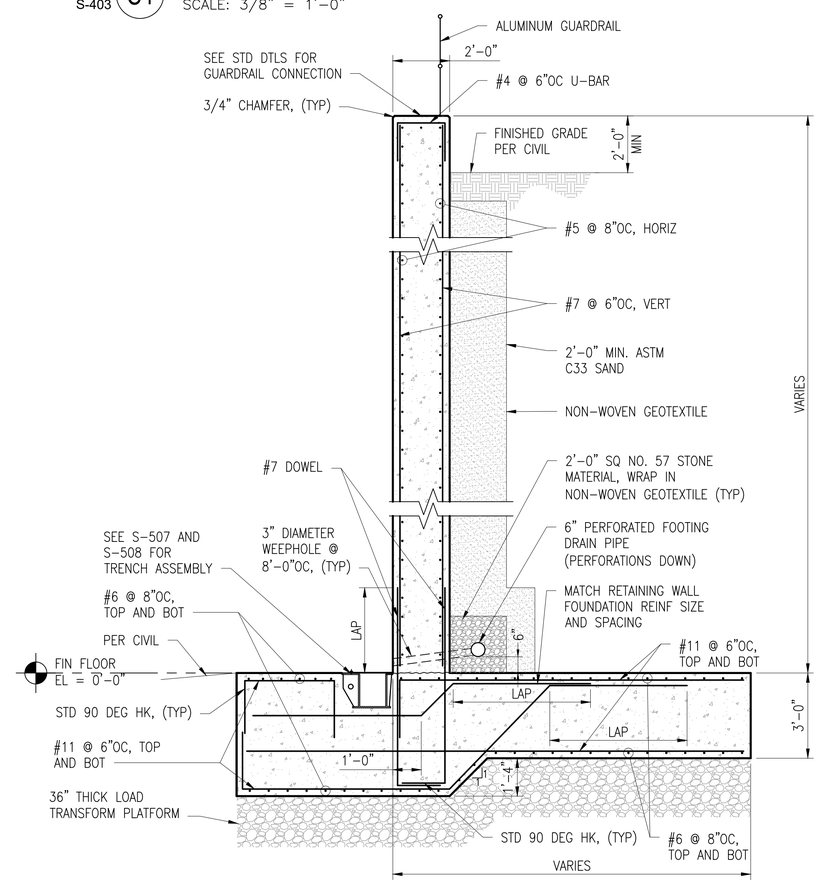

A1 / S-403 **A4** RETAINING WALL SECTION
SCALE: 3/8" = 1'-0"

GRAPHIC SCALES
SCALE: 3/8" = 1'-0" 0 2' 4' 8'

MARK	DESCRIPTION	DATE

SEAL

A/E INFO

APPROVED
FOR COMMANDER NAVFAC

ACTIVITY: Approved by LCDR VINCE DEL GRECO, ROICC with PWD YORKTOWN, via Email.

SATISFACTORY TO DATE	03/26/2026
DES VAA / DRW MTW / CHK CWJ	
PM/DM	MME/WJW
BRANCH MANAGER	DLB
CHIEF ENG/ARCH	JWJ
FIRE PROTECTION	HPN

DEPARTMENT OF THE NAVY
NAVAL FACILITIES ENGINEERING SYSTEMS COMMAND
MIDLANT PDC CORE
NAVAL FACILITIES ENGINEERING SYSTEMS COMMAND
NAVAL STATION NORFOLK, VIRGINIA
YORKTOWN, VIRGINIA
NAVAL WEAPONS STATION
P-171 WEAPONS MAGAZINES
WALL SECTIONS – 3

SCALE:	AS SHOWN
EPROJECT NO.:	1737010
CONSTR. CONTR. NO.	##
NAVFAC DRAWING NO.	12941988
SHEET 330 OF 499	

S-304

DRAWFORM REVISION: 14 SEP 2023

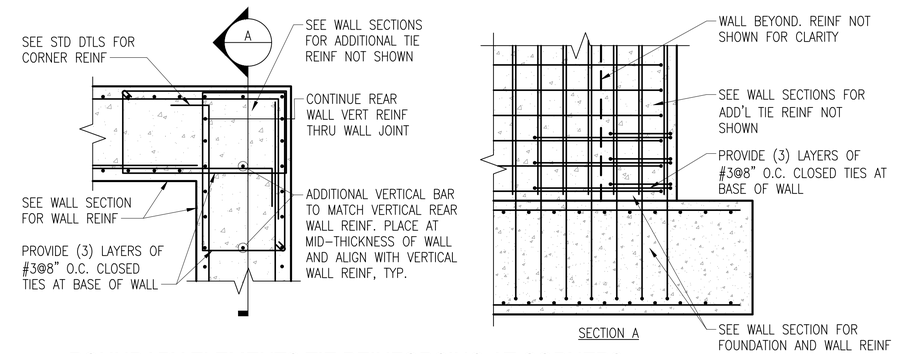

A1 S-101 C1 BOUNDARY ELEMENTS TIE REINFORCING AT CORNERS

SCALE: 1/2" = 1'-0"

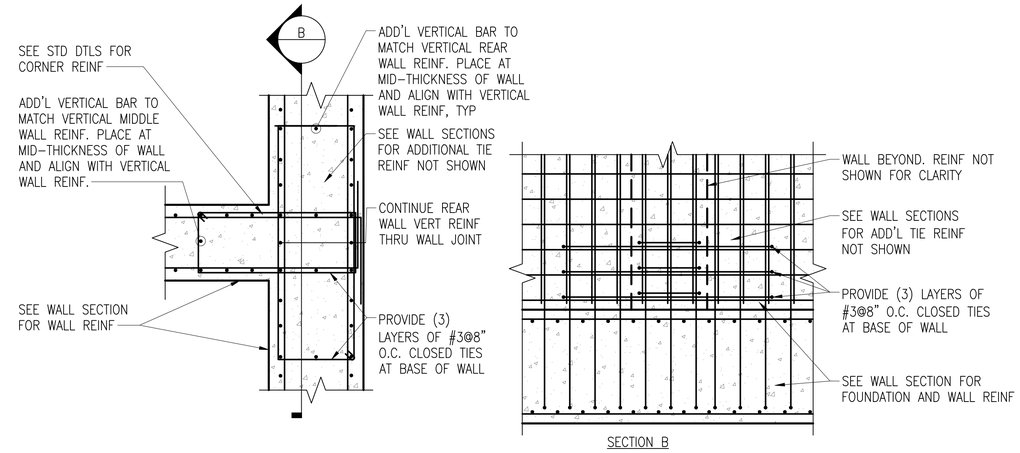

A1 S-101 C3 BOUNDARY ELEMENTS TIE REINFORCING AT INTERSECTIONS

SCALE: 1/2" = 1'-0"

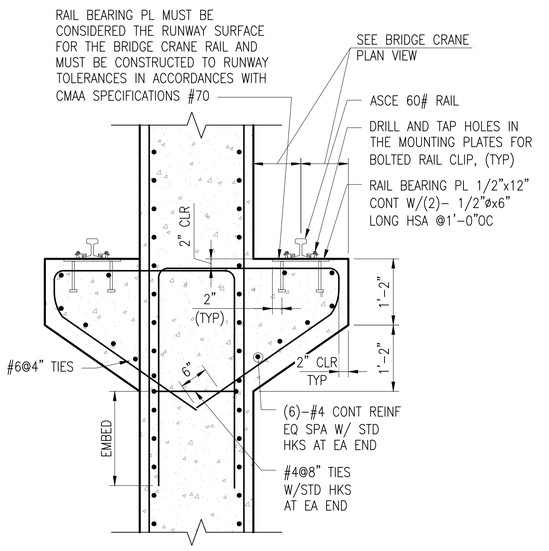

NOTE:

1. THE BRIDGE CRANE CORBEL MUST BE PLACED MONOLITHICALLY WITH THE CONCRETE SIDEWALLS.

A1 S-305 A1 BRIDGE CRANE CONTINUOUS CORBEL DETAIL

SCALE: 3/4" = 1'-0"

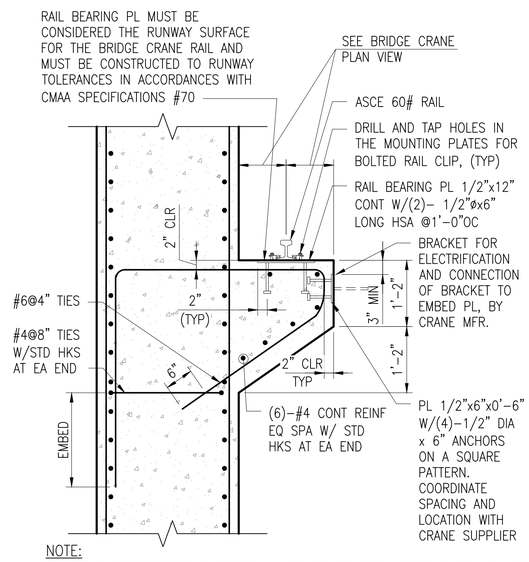

NOTE:

1. THE BRIDGE CRANE CORBEL MUST BE PLACED MONOLITHICALLY WITH THE CONCRETE SIDEWALLS.
2. EMBED PLATES FOR ELECTRIFICATION ARE DESIGNED TO SUPPORT 200 POUNDS AT A MAXIMUM DISTANCE OF 1'-6" FROM THE FACE OF THE CORBEL, AND MUST BE PLACED ON BOTH SIDEWALL CORBELS.

A1 S-305 A3 BRIDGE CRANE CONTINUOUS CORBEL DETAIL

SCALE: 3/4" = 1'-0"

GRAPHIC SCALES

SCALE: 1/2" = 1'-0" 0 1' 2' 4'

SCALE: 3/4" = 1'-0" 0 1' 2' 4'

MARK	DESCRIPTION	DATE

NAVFAC

SEAL

A/E INFO

APPROVED
Jeffrey S. Donahue, R.A.
FOR COMMANDER NAVFAC

ACTIVITY
Approved by LCDR VINCE DEL GRECO, ROICC with PWD YORKTOWN, via Email.

SATISFACTORY TO DATE 03/26/2026

DES VAA	DRW MTW	CHK CWJ	
PM/DM	MME/WJW		
BRANCH MANAGER	DLB		
CHIEF ENG/ARCH	JWJ		
FIRE PROTECTION	HPN		

DEPARTMENT OF THE NAVY
NAVAL FACILITIES ENGINEERING SYSTEMS COMMAND
MIDLANT PDC CORE

NAVAL FACILITIES ENGINEERING SYSTEMS COMMAND
NAVAL STATION NORFOLK, VIRGINIA

NAVAL WEAPONS STATION
YORKTOWN, VIRGINIA

P-171 WEAPONS MAGAZINES

BRIDGE CRANE CORBELS AND BOUNDARY ELEMENTS

SCALE: AS SHOWN

EPROJECT NO.: 1737010

CONSTR. CONTR. NO.: ##

NAVFAC DRAWING NO. 12941989

SHEET 331 OF 499

S-305

DRAWFORM REVISION: 14 SEP 2023

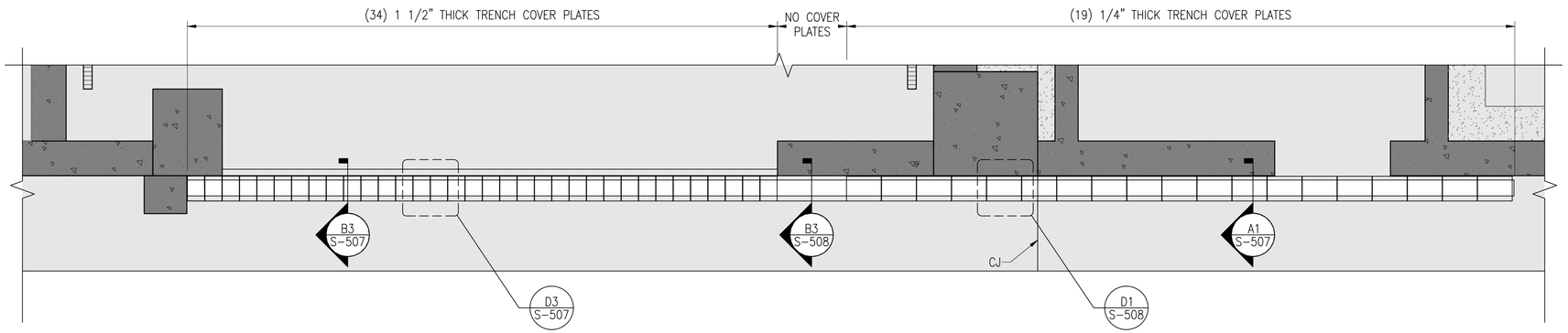

A1 S-101 C1 TRENCH COVER LAYOUT PLAN
SCALE: 1/4" = 1'-0"

PLAN NORTH

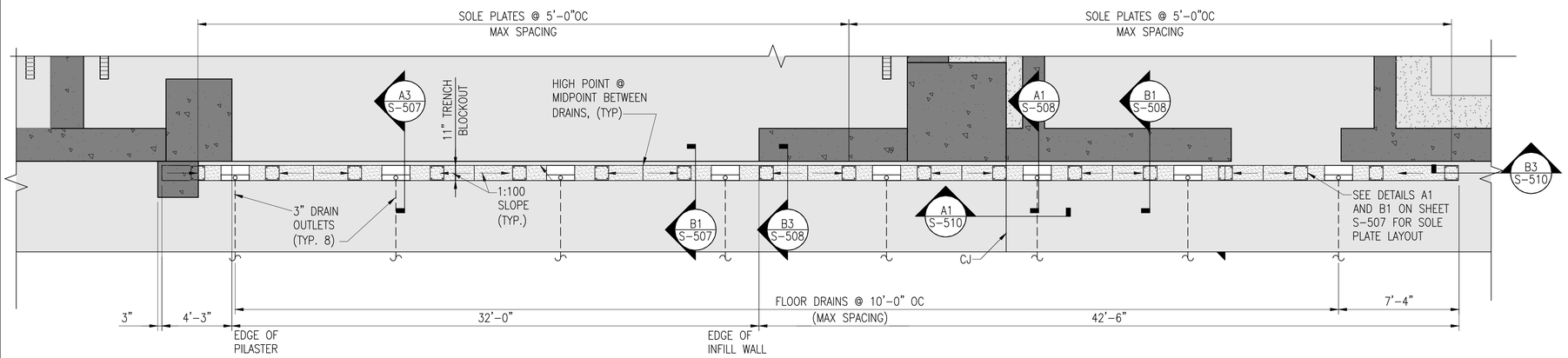

NOTE:
SEE DETAIL D1 ON SHEET S-507 FOR TRENCH ASSEMBLY AND WELDMENT.

A1 S-101 A1 TRENCH LAYOUT PLAN
SCALE: 1/4" = 1'-0"

PLAN NORTH

GENERAL SHEET NOTES

1. TRENCH COVER PLATES MUST BE FABRICATED TO BE ABLE TO BE LIFTED AUTOMATICALLY BY A DOOR PLOW LOCATED AT THE TRAILING AND LEADING EDGES OF THE SLIDING BLAST DOOR. TRENCH PLATE FABRICATOR MUST COORDINATE LOCATION AND ORIENTATION OF CAM GUIDES FOR THE TRENCH PLATES WITH THE BLAST DOOR FABRICATOR SUCH THAT THERE IS A SEAMLESS INTERFACE WITH THE DOOR PLOW SYSTEM AND THE TRENCH PLATES.
2. FINAL TERMINATION OF DOOR TRENCH DRAINS MUST BE AS DETERMINED BY THE SITE-ADAPT ENGINEER.
3. ASCE 60# RAIL MUST EXTEND THE ENTIRE LENGTH OF TRENCH WITH A 2" GAP AT THE ENDS. RAIL SPLICES AND SPLICE CONNECTIONS TO BE SELECTED BY RAIL MFR, AND TO BE LOCATED AT THE CENTER LINE BETWEEN TWO TRENCH BLOCKOUTS. SEE S-507 FOR MORE INFORMATION ABOUT LOCATION/ALIGNMENT OF RAIL.
4. TRENCH ASSEMBLY AND TRENCH COVER PLATES TO BE PROVIDED AT EACH MAGAZINE BAY. ONLY ONE CONDITION SHOWN IN THIS DETAIL. ORIENTATION OF THE TRENCH ASSEMBLY AND TRENCH COVERS IN OTHER BAY TO BE SYMMETRIC ABOUT THE MIDDLE WALL OF THE MAGAZINE.

GRAPHIC SCALES
SCALE: 1/4" = 1'-0"
0 2' 4' 8'

MARK	DESCRIPTION	DATE

NAVFAC

SEAL

A/E INFO

APPROVED
FOR COMMANDER NAVFAC

ACTIVITY
Approved by LCDR VINCE DEL GRECO, ROICC with PWD YORKTOWN, via Email.
SATISFACTORY TO DATE 03/26/2026

DES VAA	DRW MTW	CHK CWJ	
PM/DM	MME/WJW		
BRANCH MANAGER	DLB		
CHIEF ENG/ARCH	JWJ		
FIRE PROTECTION	HPN		

DEPARTMENT OF THE NAVY
NAVAL FACILITIES ENGINEERING SYSTEMS COMMAND
MIDLANT PDC CORE
NAVAL FACILITIES ENGINEERING SYSTEMS COMMAND
NAVAL STATION NORFOLK, VIRGINIA
NAVAL WEAPONS STATION
YORKTOWN, VIRGINIA
P-171 WEAPONS MAGAZINES
ENLARGED TRENCH PLAN

SCALE: AS SHOWN
EPROJECT NO.: 1737010
CONSTR. CONTR. NO. ##
NAVFAC DRAWING NO. 12941990
SHEET 332 OF 499
S-401

DRAWFORM REVISION: 14 SEP 2023

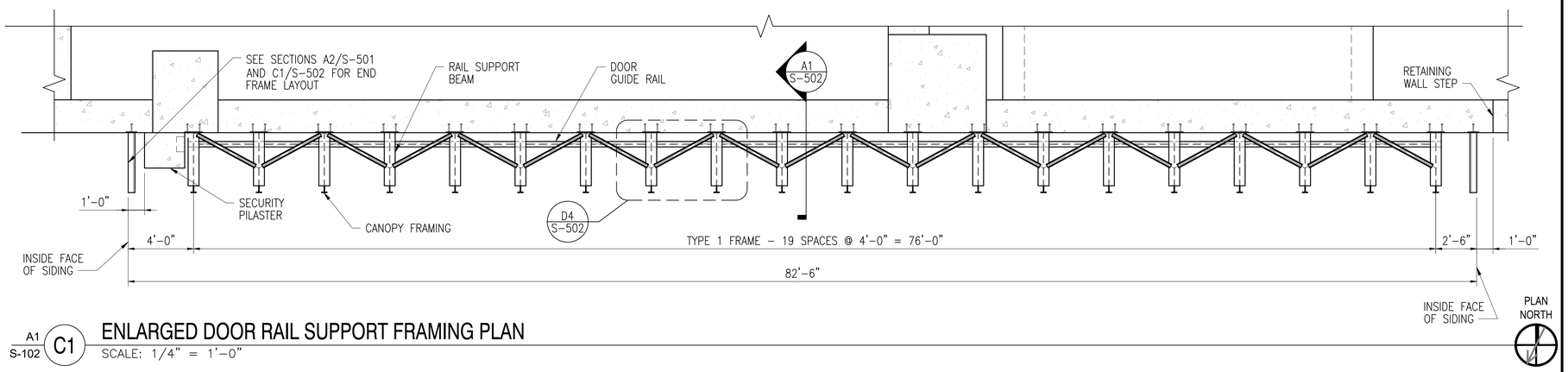

A1 S-102 C1 **ENLARGED DOOR RAIL SUPPORT FRAMING PLAN**

SCALE: 1/4" = 1'-0"

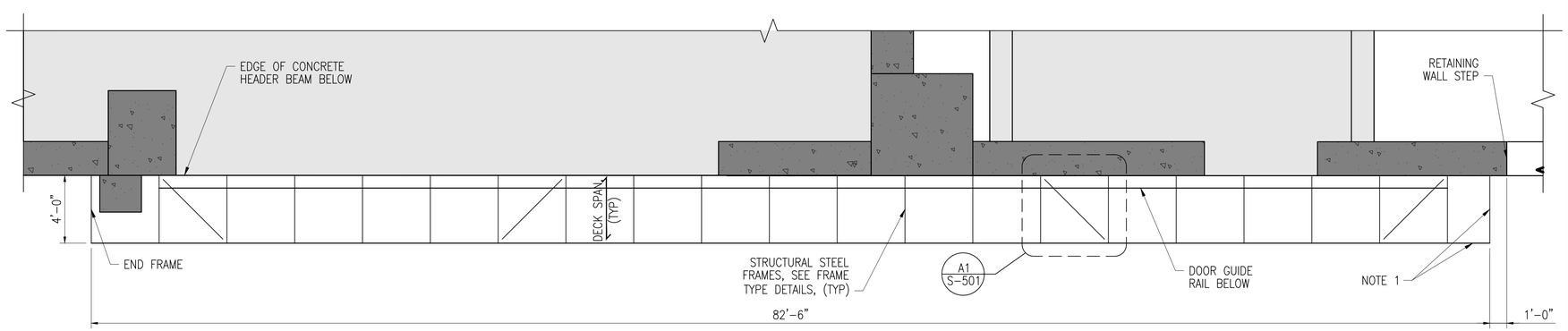

A1 S-102 A1 **ENLARGED CANOPY FRAMING PLAN**

SCALE: 1/4" = 1'-0"

GENERAL SHEET NOTES

1. STEEL DECK MUST BE INSTALLED FOR ROOF AND SIDING OF CANOPY STRUCTURE. REFERENCE S-003 FOR STEEL DECK REQUIREMENTS.

GRAPHIC SCALES

SCALE: 1/4" = 1'-0"

0 2' 4' 8'

MARK	DESCRIPTION	DATE

NAVFAC

SEAL

A/E INFO

APPROVED

FOR COMMANDER NAVFAC

ACTIVITY: Approved by LCDR VINCE DEL GRECO, ROICC with PWD YORKTOWN, via Email.

SATISFACTORY TO DATE: 03/26/2026

DES VAA | DRW MTW | CHK CWJ

PM/DM: MME/WJW

BRANCH MANAGER: DLB

CHIEF ENG/ARCH: JWJ

FIRE PROTECTION: HPN

DEPARTMENT OF THE NAVY
NAVAL FACILITIES ENGINEERING SYSTEMS COMMAND
MIDLANT PDC CORE
NAVAL FACILITIES ENGINEERING SYSTEMS COMMAND
NAVAL STATION NORFOLK, VIRGINIA
NAVAL WEAPONS STATION YORKTOWN, VIRGINIA
P-171 WEAPONS MAGAZINES
ENLARGED CANOPY FRAMING PLAN

SCALE: AS SHOWN

EPROJECT NO.: 1737010

CONSTR. CONTR. NO. ##

NAVFAC DRAWING NO. 12941991

SHEET 333 OF 499

S-402

DRAWFORM REVISION: 14 SEP 2023

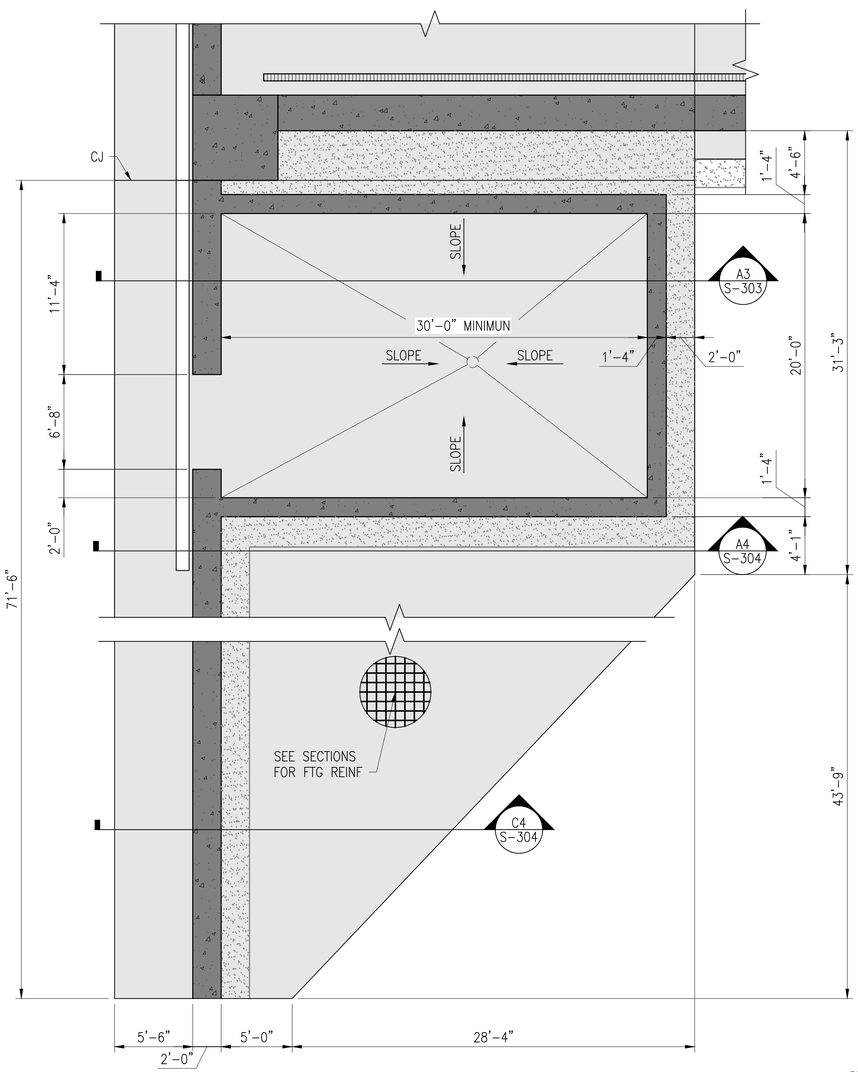

A1 S-101 **A1** RETAINING WALL FOUNDATION - MECHANICAL ROOM

SCALE: 3/16" = 1'-0"

PLAN NORTH

GRAPHIC SCALES

SCALE: 3/16" = 1'-0" 0 4' 8' 16'

MARK	DESCRIPTION	DATE

NAVFAC

SEAL

A/E INFO

APPROVED

FOR COMMANDER NAVFAC

ACTIVITY
Approved by LCDR VINCE DEL GRECO, ROICC with PWD YORKTOWN, via Email.

SATISFACTORY TO DATE 03/26/2026

DES VAA DRW MTW CHK CWJ

PM/DM MME/WJW

BRANCH MANAGER DLB

CHIEF ENG/ARCH JWJ

FIRE PROTECTION HPN

DEPARTMENT OF THE NAVY
NAVAL FACILITIES ENGINEERING SYSTEMS COMMAND
MIDLANT PDC CORE

NAVAL FACILITIES ENGINEERING SYSTEMS COMMAND
NAVAL STATION NORFOLK, VIRGINIA

NAVAL WEAPONS STATION
YORKTOWN, VIRGINIA

P-171 WEAPONS MAGAZINES

ENLARGED PLAN VIEW RETAINING WALL

SCALE: AS SHOWN

EPROJECT NO.: 1737010

CONSTR. CONTR. NO. ##

NAVFAC DRAWING NO. 12941992

SHEET 334 OF 499

S-403

DRAWFORM REVISION: 14 SEP 2023

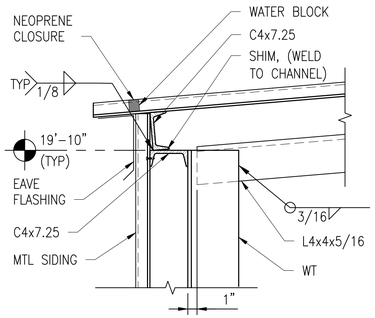

A1 S-502 D1 **DETAIL**
SCALE: 1 1/2" = 1'-0"

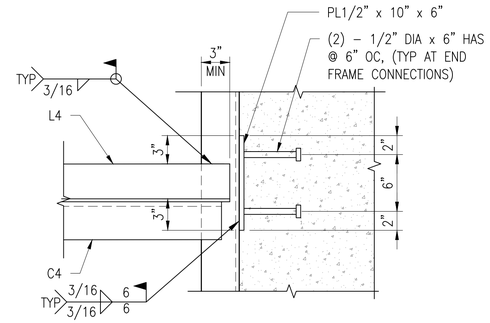

A3 S-501 D3 **DETAIL**
SCALE: 1 1/2" = 1'-0"

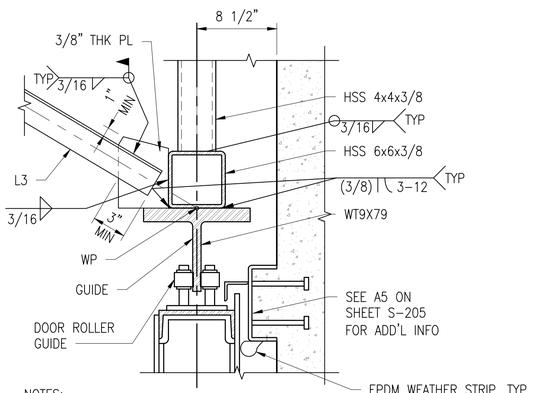

NOTES:
DOOR ROLLER GUIDE MUST HAVE A 9 KIP MINIMUM LATERAL LOAD CAPACITY. WELD DOOR ROLLER GUIDE PER MANUFACTURER'S RECOMMENDATIONS.

A1 S-502 B1 **DETAIL**
SCALE: 1 1/2" = 1'-0"

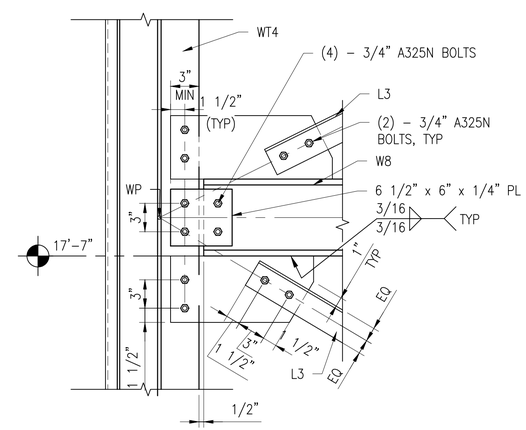

A1 S-502 B3 **DETAIL**
SCALE: 1 1/2" = 1'-0"

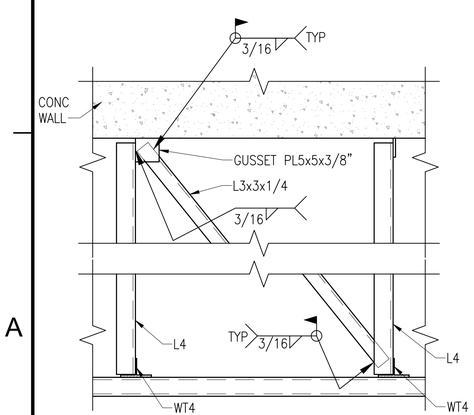

A1 S-402 A1 **DETAIL**
SCALE: 3/4" = 1'-0"

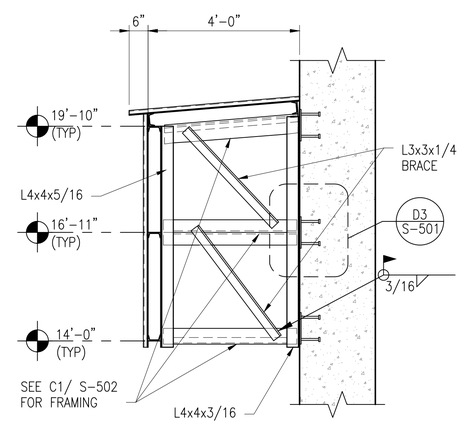

A1/C1 S-204 A3 **SECTION**
SCALE: 1 1/2" = 1'-0"

GRAPHIC SCALES

SCALE: 1/2" = 1'-0" (0, 1', 2', 4')
SCALE: 3/4" = 1'-0" (0, 1', 2', 4')
SCALE: 1 1/2" = 1'-0" (0, 6", 1', 2')

MARK	DESCRIPTION	DATE

NAVFAC

SEAL

A/E INFO

APPROVED
FOR COMMANDER NAVFAC

ACTIVITY
Approved by LCDR VINCE DEL GRECO, ROICC with PWD YORKTOWN, via Email.
SATISFACTORY TO DATE 03/26/2026

DES VAA	DRW MTW	CHK CWJ	
PM/DM	MME/WJW		
BRANCH MANAGER	DLB		
CHIEF ENG/ARCH	JWJ		
FIRE PROTECTION	HPN		

DEPARTMENT OF THE NAVY
NAVAL FACILITIES ENGINEERING SYSTEMS COMMAND
MIDLANT PDC CORE
NAVAL FACILITIES ENGINEERING SYSTEMS COMMAND
NAVAL STATION NORFOLK, VIRGINIA
NAVAL WEAPONS STATION
YORKTOWN, VIRGINIA
P-171 WEAPONS MAGAZINES
DOOR GUIDE AND CANOPY DETAILS

SCALE: AS SHOWN
EPROJECT NO.: 1737010
CONSTR. CONTR. NO. ##
NAVFAC DRAWING NO. 12941993
SHEET 335 OF 499

S-501

DRAWFORM REVISION: 14 SEP 2023

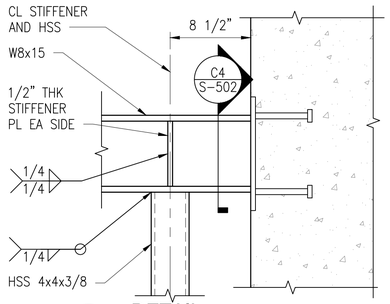

A1 / S-502 **D1** DETAIL
SCALE: 1 1/2" = 1'-0"

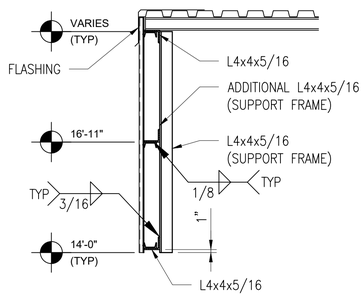

A1/C1 / S-204 **C1** SECTION
SCALE: 1/2" = 1'-0"

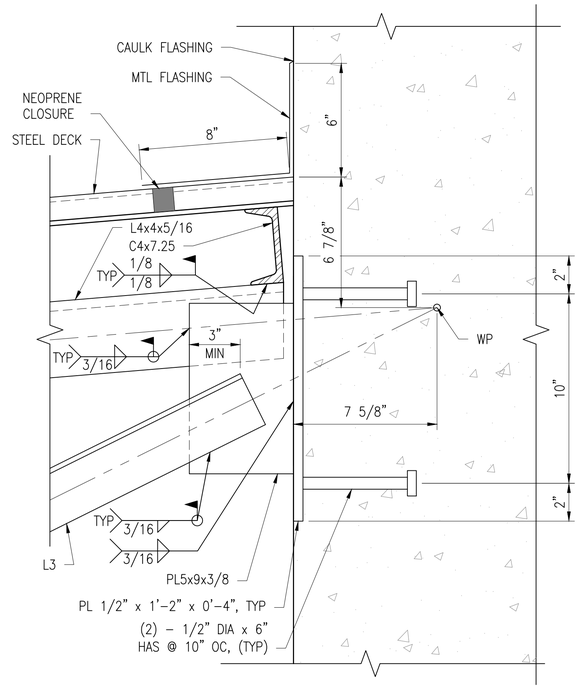

A1 / S-502 **C2** DETAIL
SCALE: 1/2" = 1'-0"

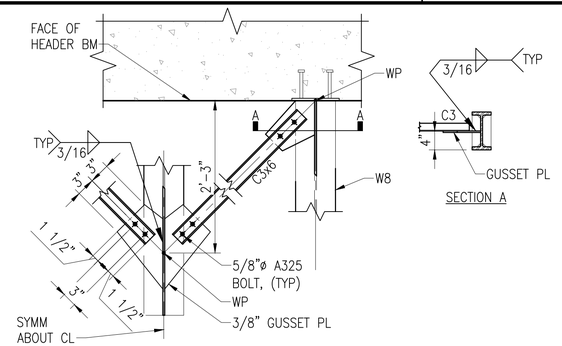

C1 / S-402 **D4** DETAIL
SCALE: 3/4" = 1'-0"

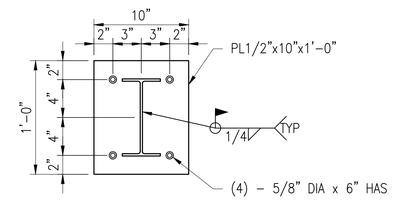

D1 / S-502 **C4** SECTION
SCALE: 1 1/2" = 1'-0"

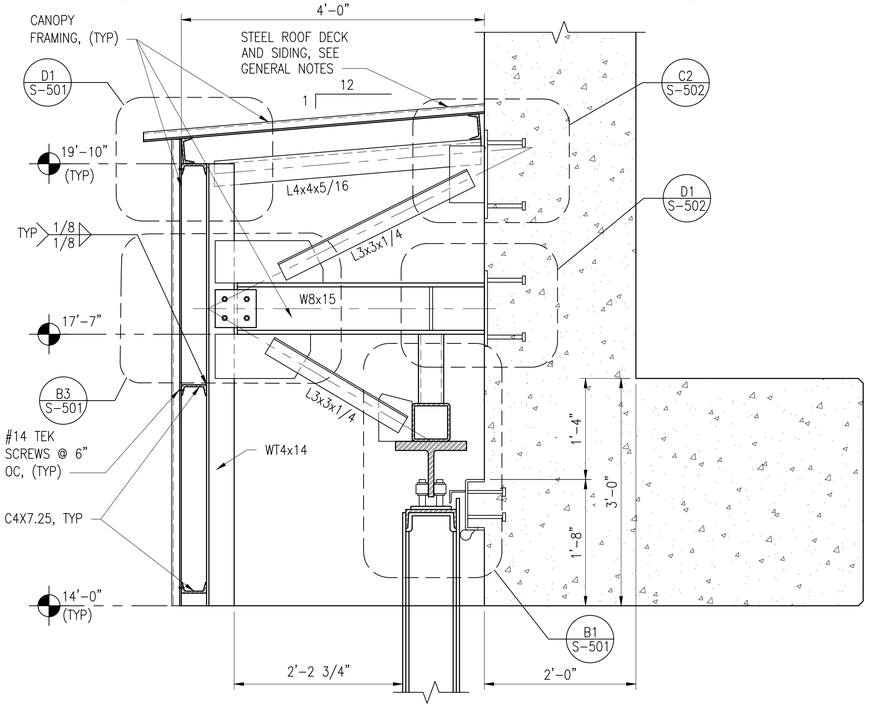

C1/S-301 / C1/S-402 **A1** SECTION
SCALE: 1" = 1'-0"

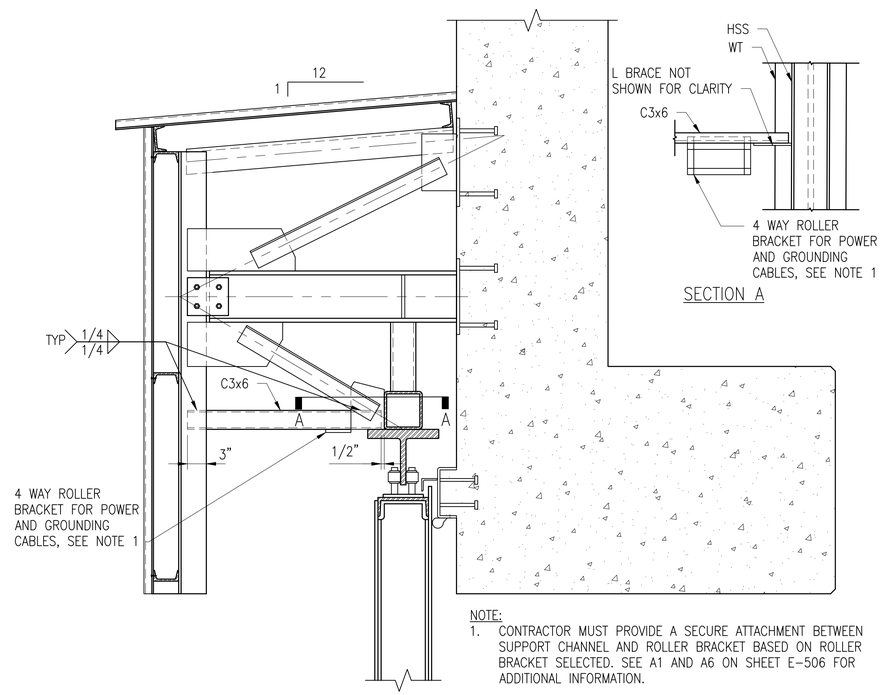

A1 / S-502 **A3** DETAIL
SCALE: 3" = 1'-0"

NOTE:
1. CONTRACTOR MUST PROVIDE A SECURE ATTACHMENT BETWEEN SUPPORT CHANNEL AND ROLLER BRACKET BASED ON ROLLER BRACKET SELECTED. SEE A1 AND A6 ON SHEET E-506 FOR ADDITIONAL INFORMATION.
2. SEE DETAIL A1 ON THIS SHEET FOR INFORMATION NOT REPEATED.

GRAPHIC SCALES

SCALE: 1/2" = 1'-0" 0 1' 2' 4'
SCALE: 3/4" = 1'-0" 0 1' 2' 4'
SCALE: 1" = 1'-0" 0 6" 1' 2'
SCALE: 1 1/2" = 1'-0" 0 6" 1' 2'
SCALE: 3" = 1'-0" 0 3" 6" 1'

MARK	DESCRIPTION	DATE

NAVFAC

SEAL

A/E INFO

APPROVED
FOR COMMANDER NAVFAC

ACTIVITY: Approved by LCDR VINCE DEL GRECO, ROICC with PWD YORKTOWN, via Email.
SATISFACTORY TO DATE 03/26/2026

DES VAA	DRW MTW	CHK CWJ	
PM/DM	MME/WJW		
BRANCH MANAGER	DLB		
CHIEF ENG/ARCH	JWJ		
FIRE PROTECTION	HPN		

DEPARTMENT OF THE NAVY
NAVAL FACILITIES ENGINEERING SYSTEMS COMMAND
MIDLANT PDC CORE
NAVAL FACILITIES ENGINEERING SYSTEMS COMMAND
NAVAL STATION NORFOLK, VIRGINIA
NAVAL WEAPONS STATION
YORKTOWN, VIRGINIA
P-171 WEAPONS MAGAZINES
DOOR GUIDE AND CANOPY DETAILS

SCALE: AS SHOWN
EPROJECT NO.: 1737010
CONSTR. CONTR. NO. ##
NAVFAC DRAWING NO. 12941994
SHEET 336 OF 499

S-502

DRAWFORM REVISION: 14 SEP 2023

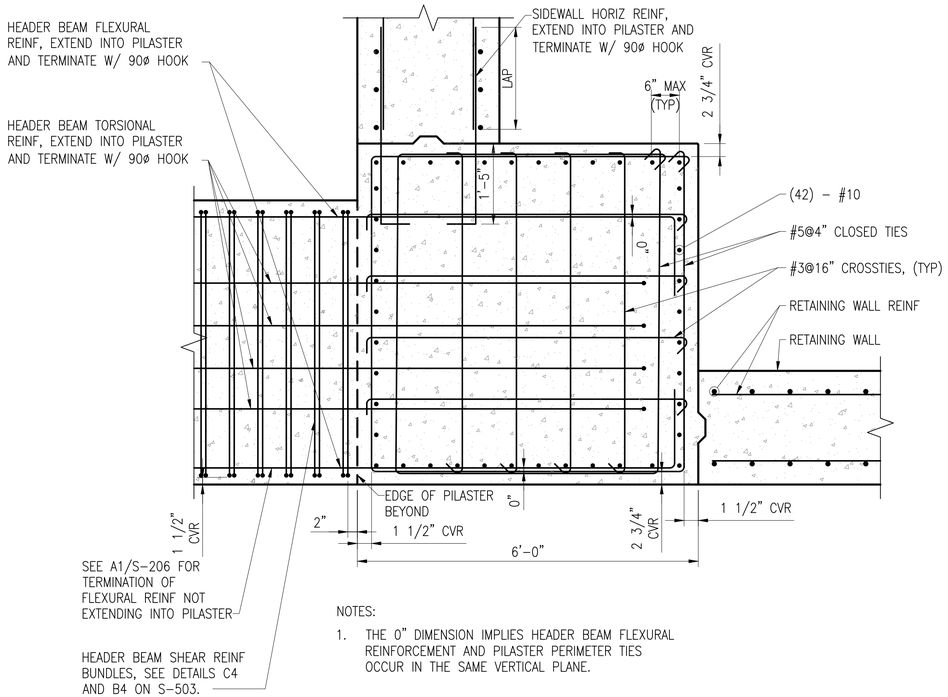

NOTES:

1. THE 0" DIMENSION IMPLIES HEADER BEAM FLEXURAL REINFORCEMENT AND PILASTER PERIMETER TIES OCCUR IN THE SAME VERTICAL PLANE.

A1 / S-206 (C1) **END PILASTER - THRU HEADER BEAM**

SCALE: 3/4" = 1'-0"

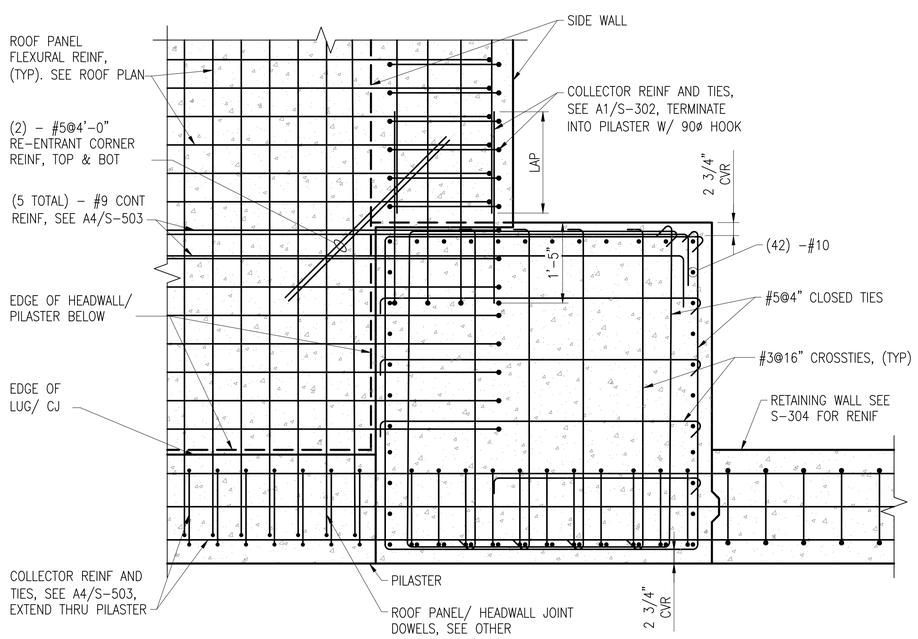

A1 / S-206 (A1) **END PILASTER - THRU ROOF SLAB**

SCALE: 3/4" = 1'-0"

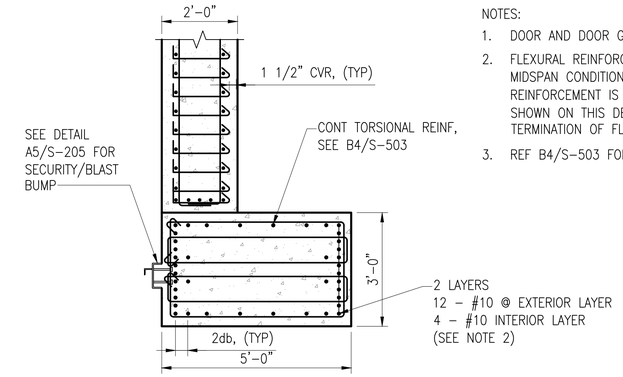

NOTES:

1. DOOR AND DOOR GUIDE NOT SHOWN FOR CLARITY.
2. FLEXURAL REINFORCEMENT SHOWN IS CONTINUOUS FROM MIDSPAN CONDITION (B4/S-503). REMAINING FLEXURAL REINFORCEMENT IS TERMINATED (C1/S-503) AND NOT SHOWN ON THIS DETAIL. SEE DETAIL A1/S-206 FOR TERMINATION OF FLEXURAL REINFORCEMENT.
3. REF B4/S-503 FOR INFORMATION NOT REPEATED.

A1 / S-206 (C4) **HEADER BEAM AT END PILASTERS**

SCALE: 1/2" = 1'-0"

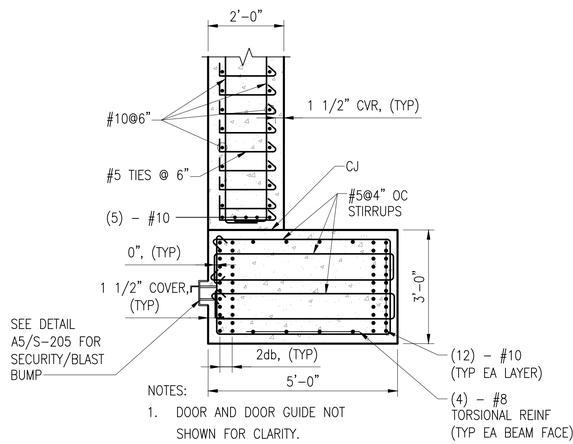

NOTES:

1. DOOR AND DOOR GUIDE NOT SHOWN FOR CLARITY.

A1 / S-206 (B4) **HEADER BEAM MIDSPAN**

SCALE: 1/2" = 1'-0"

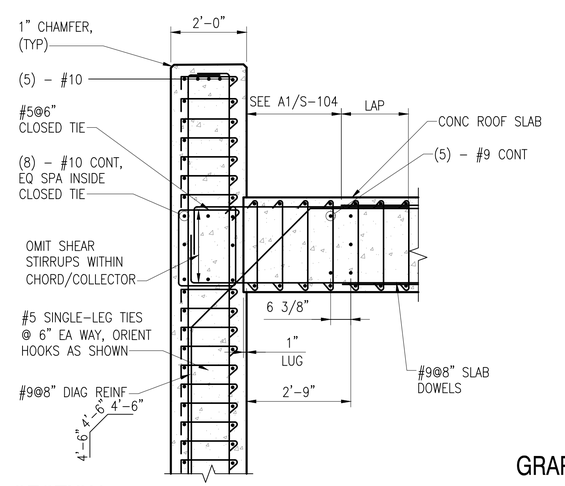

A1 / S-206 (A4) **SECTION**

SCALE: 1/2" = 1'-0"

GRAPHIC SCALES

SCALE: 1/2" = 1'-0" 0 1' 2' 4'

SCALE: 3/4" = 1'-0" 0 1' 2' 4'

MARK	DESCRIPTION	DATE

NAVFAC

SEAL

A/E INFO

APPROVED
Samuel J. Cardona, III, P.E.
FOR COMMANDER NAVFAC

ACTIVITY
Approved by LCDR VINCE DEL GRECO, ROICC with PWD YORKTOWN, via Email.

SATISFACTORY TO DATE 03/26/2026

DES	VAA	DRW MTW	CHK CWJ
PM/DM	MME/WJW		
BRANCH MANAGER	DLB		
CHIEF ENG/ARCH	JWJ		
FIRE PROTECTION	HPN		

DEPARTMENT OF THE NAVY
NAVAL FACILITIES ENGINEERING SYSTEMS COMMAND
MIDLANT PDC CORE
NAVAL FACILITIES ENGINEERING SYSTEMS COMMAND
NAVAL STATION NORFOLK, VIRGINIA
NAVAL WEAPONS STATION
YORKTOWN, VIRGINIA
P-171 WEAPONS MAGAZINES
PILASTER AND BOUNDARY ELEMENTS REINF DETAILS

SCALE: AS SHOWN
EPROJECT NO.: 1737010
CONSTR. CONTR. NO. ##
NAVFAC DRAWING NO. 12941995
SHEET 337 OF 499

S-503

DRAWFORM REVISION: 14 SEP 2023

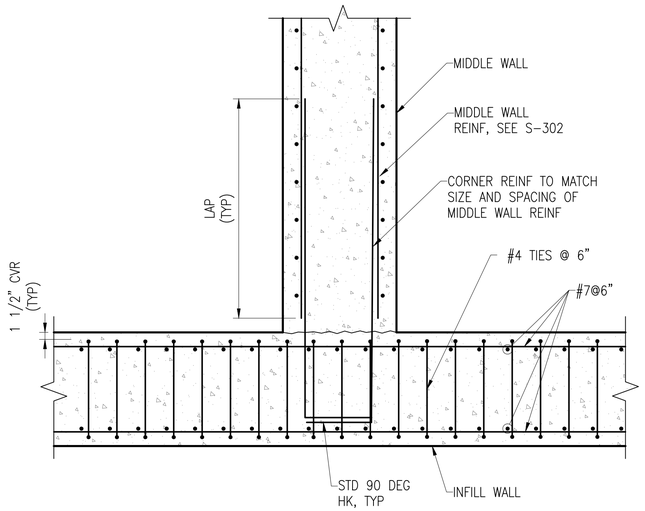

A1 S-206 C1 INFILL WALL AND MIDDLE WALL INTERSECTION DETAIL
SCALE: 3/4" = 1'-0"

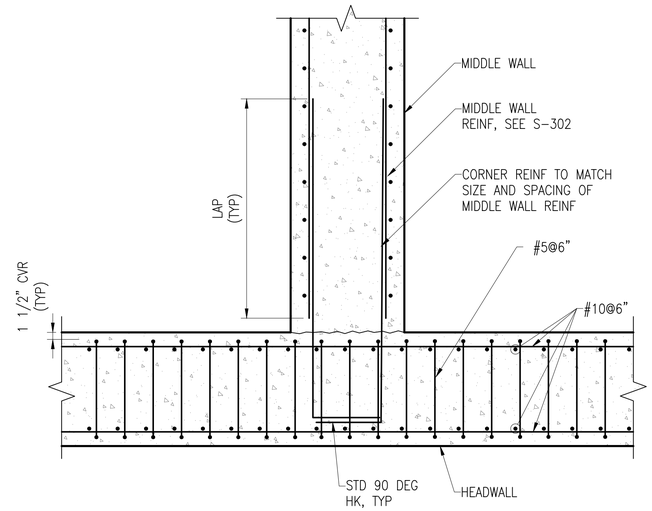

A1 S-206 C3 HEADWALL AND MIDDLE WALL INTERSECTION DETAIL
SCALE: 3/4" = 1'-0"

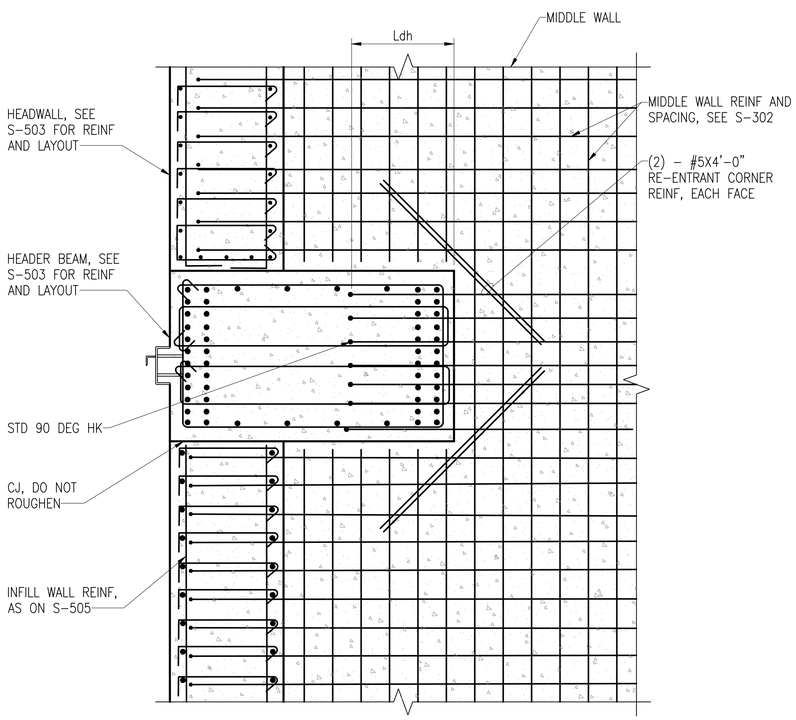

A1 S-206 A1 HEADER BEAM AND MIDDLE WALL INTERSECTION DETAIL
SCALE: 3/4" = 1'-0"

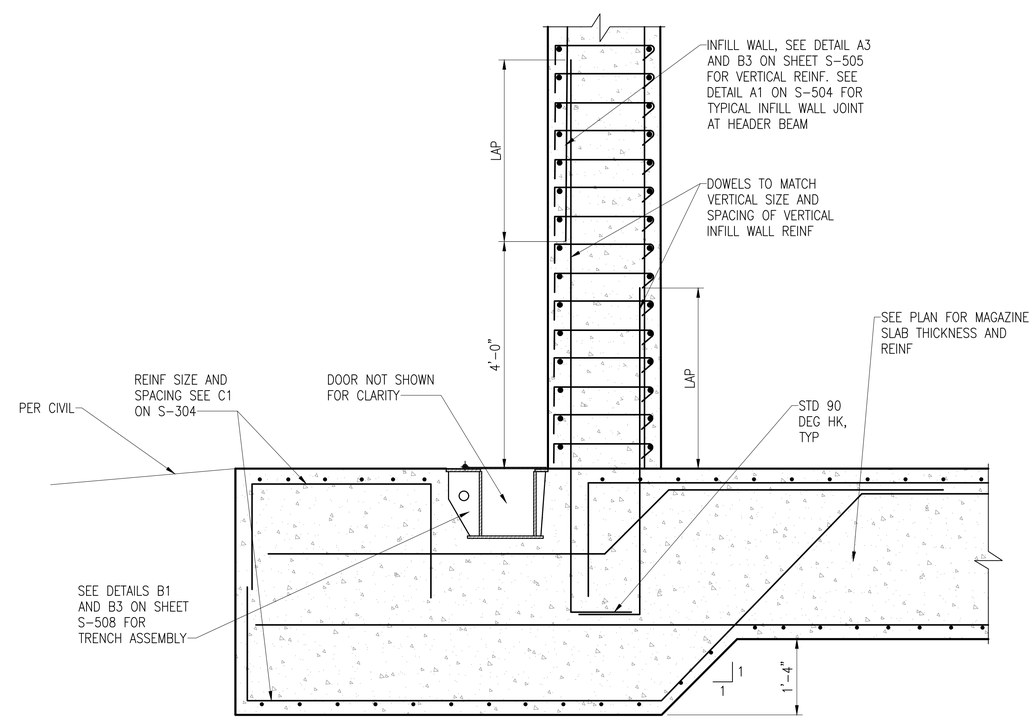

A1 S-206 A3 INFILL WALL FOUNDATION CONNECTION DETAIL
SCALE: 3/4" = 1'-0"

GRAPHIC SCALES
SCALE: 3/4" = 1'-0" 0 1' 2' 4'

MARK	DESCRIPTION	DATE

NAVFAC

SEAL

A/E INFO

APPROVED
Digitally signed by Christine R. Fox
FOR COMMANDER NAVFAC

ACTIVITY
Approved by LCDR VINCE DEL GRECO, ROICC with PWD YORKTOWN, via Email.

SATISFACTORY TO DATE	03/26/2026
DES VAA / DRW MTW / CHK CWJ	
PM/DM	MME/WJW
BRANCH MANAGER	DLB
CHIEF ENG/ARCH	JWJ
FIRE PROTECTION	HPN

DEPARTMENT OF THE NAVY
NAVAL FACILITIES ENGINEERING SYSTEMS COMMAND
MIDLANT PDC CORE
NAVAL FACILITIES ENGINEERING SYSTEMS COMMAND
NAVAL STATION NORFOLK, VIRGINIA
NAVAL WEAPONS STATION
YORKTOWN, VIRGINIA
P-171 WEAPONS MAGAZINES
INTERIOR WALL AND MIDDLE WALL DETAILS

SCALE:	AS SHOWN
EPROJECT NO.:	1737010
CONSTR. CONTR. NO.	##
NAVFAC DRAWING NO.	12941996
SHEET 338 OF 499	

S-504

DRAWFORM REVISION: 14 SEP 2023

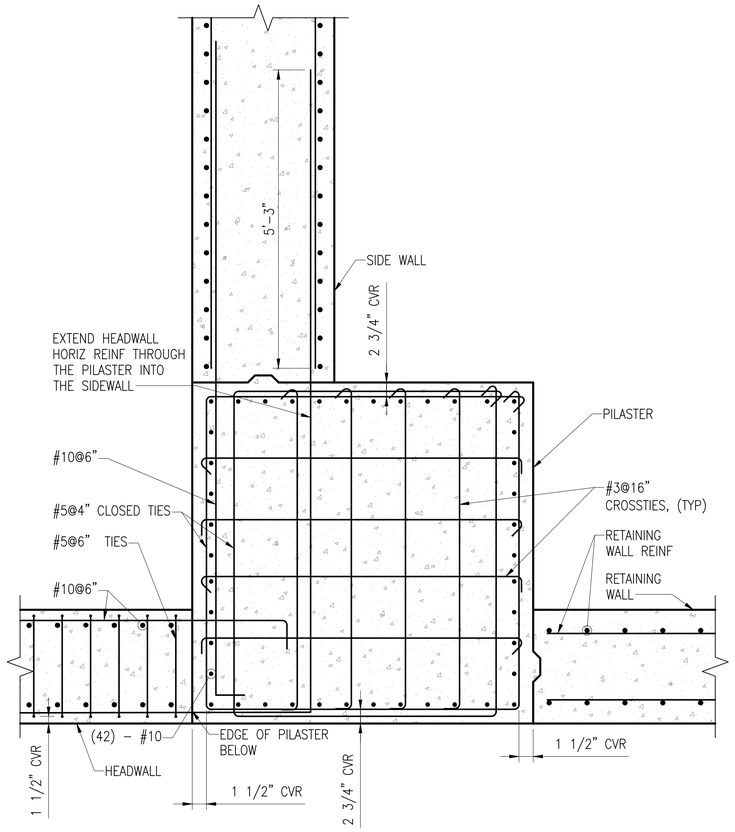

A1 S-206 B1 END PILASTER - ABOVE HEADER BEAM (@HEADWALL)
SCALE: 3/4" = 1'-0"

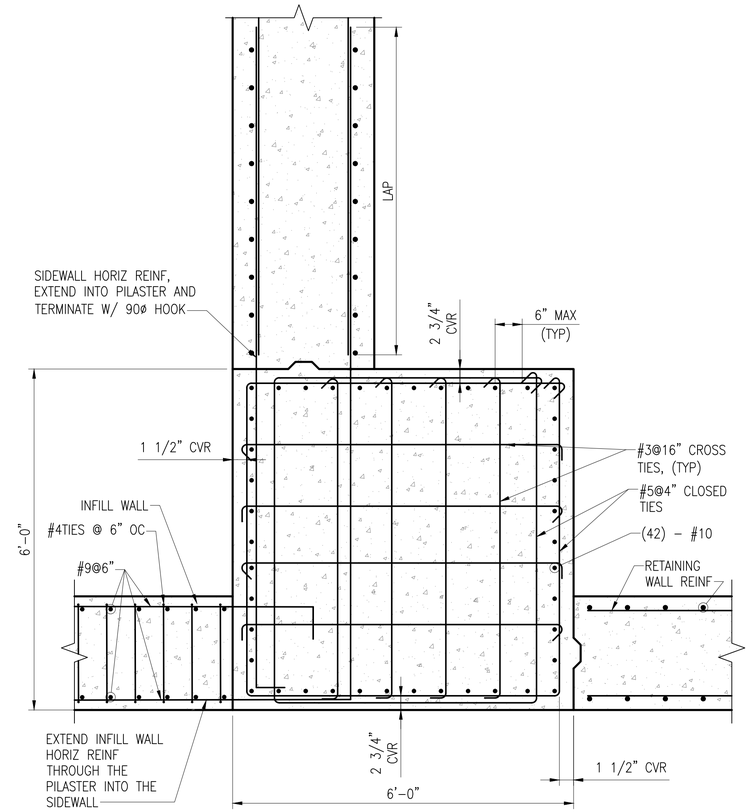

A1 S-206 B3 END PILASTER - BELOW HEADER BEAM
SCALE: 3/4" = 1'-0"

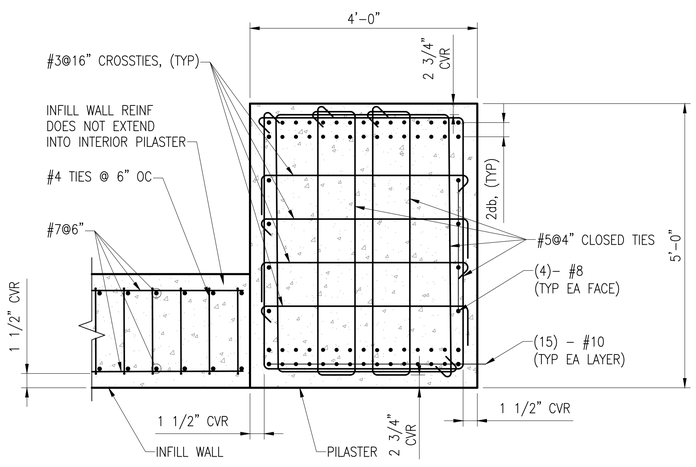

A1 S-206 A1 INTERIOR PILASTER BELOW HEADER BEAM
SCALE: 3/4" = 1'-0"

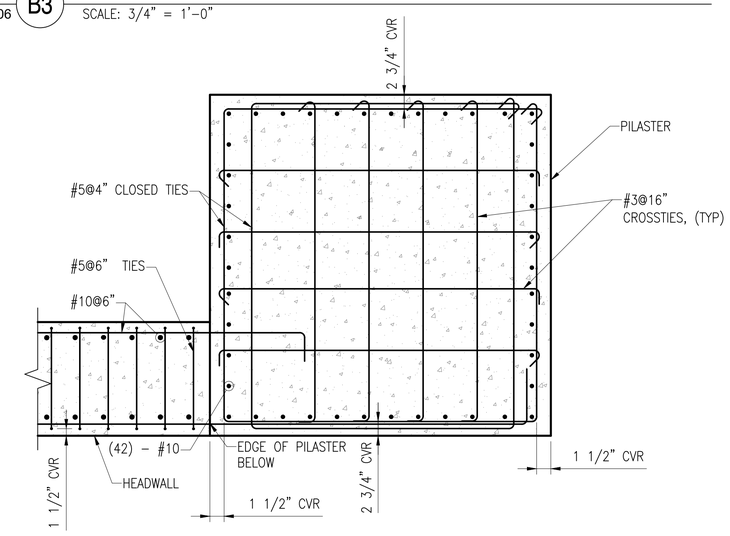

A1 S-206 A3 END PILASTER - ABOVE ROOF SLAB
SCALE: 3/4" = 1'-0"

GRAPHIC SCALES
SCALE: 3/4" = 1'-0" 0 1' 2' 4'

MARK	DESCRIPTION	DATE

NAVFAC

SEAL

A/E INFO

APPROVED
FOR COMMANDER NAVFAC

ACTIVITY
Approved by LCDR VINCE DEL GRECO, ROICC with PWD YORKTOWN, via Email.

SATISFACTORY TO DATE 03/26/2026

DES	VAA	DRW MTW	CHK CWJ

PM/DM	MME/WJW
BRANCH MANAGER	DLB
CHIEF ENG/ARCH	JWJ
FIRE PROTECTION	HPN

DEPARTMENT OF THE NAVY
NAVAL FACILITIES ENGINEERING SYSTEMS COMMAND
MIDLANT PDC CORE
NAVAL FACILITIES ENGINEERING SYSTEMS COMMAND
NAVAL STATION NORFOLK, VIRGINIA
NAVAL WEAPONS STATION
YORKTOWN, VIRGINIA
P-171 WEAPONS MAGAZINES
PILASTER REINF DETAILS

SCALE: AS SHOWN
EPROJECT NO.: 1737010
CONSTR. CONTR. NO.: ##
NAVFAC DRAWING NO. 12941997
SHEET 339 OF 499
S-505

DRAWFORM REVISION: 14 SEP 2023

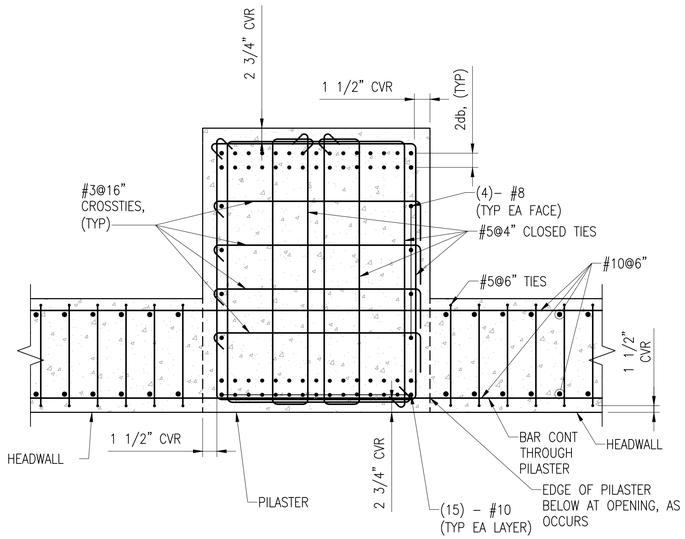

A1 S-206 C1 **INTERIOR PILASTER - ABOVE HEADER BEAM**

SCALE: 3/4" = 1'–0"

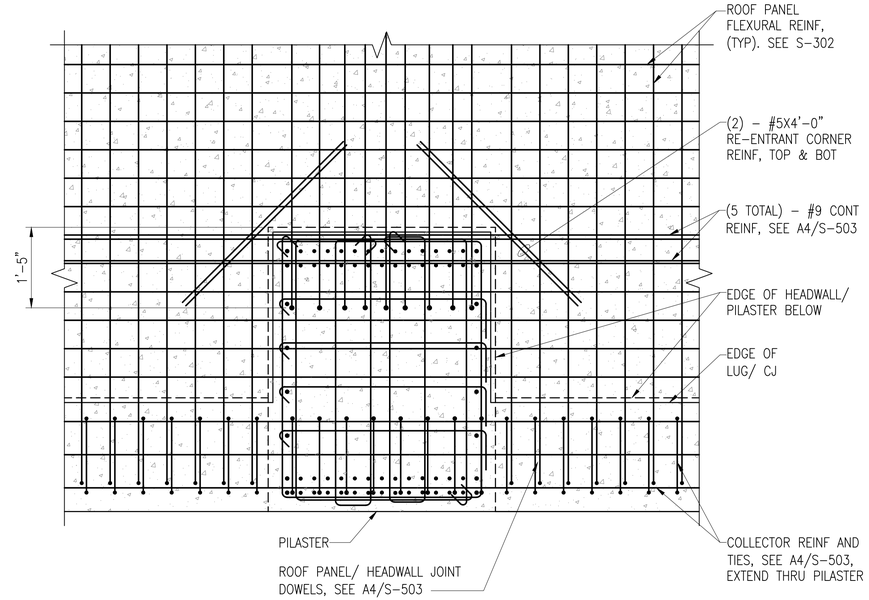

A1 S-206 C3 **INTERIOR PILASTER - THROUGH ROOF SLAB**

SCALE: 3/4" = 1'–0"

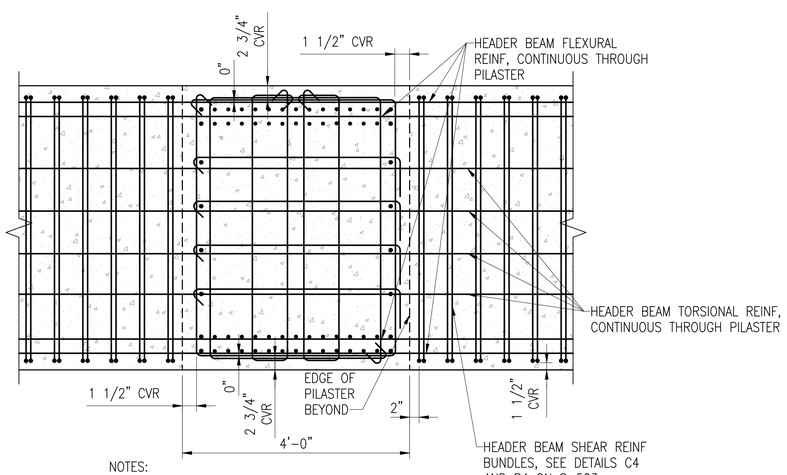

NOTES:

1. THE 0" DIMENSION IMPLIES HEADER BEAM FLEXURAL REINFORCEMENT AND PILASTER PERIMETER TIES OCCUR IN THE SAME VERTICAL PLANE.

A1 S-206 A1 **INTERIOR PILASTER - THROUGH HEADER BEAM**

SCALE: 3/4" = 1'–0"

GRAPHIC SCALES

SCALE: 3/4" = 1'–0" 0 1' 2' 4'

MARK	DESCRIPTION	DATE

NAVFAC

SEAL

A/E INFO

APPROVED

FOR COMMANDER NAVFAC

ACTIVITY: Approved by LCDR VINCE DEL GRECO, ROICC with PWD YORKTOWN, via Email.

SATISFACTORY TO DATE 03/26/2026

DES VAA | DRW MTW | CHK CWJ

PM/DM MME/WJW

BRANCH MANAGER DLB

CHIEF ENG/ARCH JWJ

FIRE PROTECTION HPN

DEPARTMENT OF THE NAVY
NAVAL FACILITIES ENGINEERING SYSTEMS COMMAND
MIDLANT PDC CORE

NAVAL FACILITIES ENGINEERING SYSTEMS COMMAND
NAVAL STATION NORFOLK, VIRGINIA

NAVAL WEAPONS STATION
YORKTOWN, VIRGINIA

P-171 WEAPONS MAGAZINES

INTERIOR PILASTER DETAILS

SCALE: AS SHOWN

EPROJECT NO.: 1737010

CONSTR. CONTR. NO. ##

NAVFAC DRAWING NO. 12941998

SHEET 340 OF 499

S-506

DRAWFORM REVISION: 14 SEP 2023

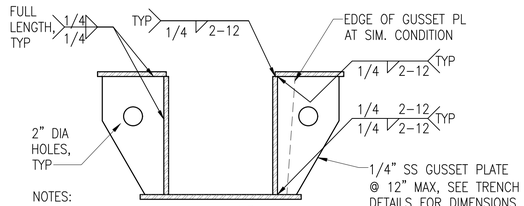

NOTES:

1. ALL TRENCH PLATES ARE 1/2" THK SS, UNO.
2. SEE TRENCH DETAILS FOR OVERALL SIZE OF TRENCH PLATE ASSEMBLY.
3. TRENCH PL MFR TO PROVIDE OVERSIZE BOLT HOLES ON TRENCH BOTTOM PL FOR ACCESS OF SOLE PL ANCHOR BOLTS TO CONC.

D1 TRENCH ASSEMBLY AND WELDMENT

SCALE: 1 1/2" = 1'-0"

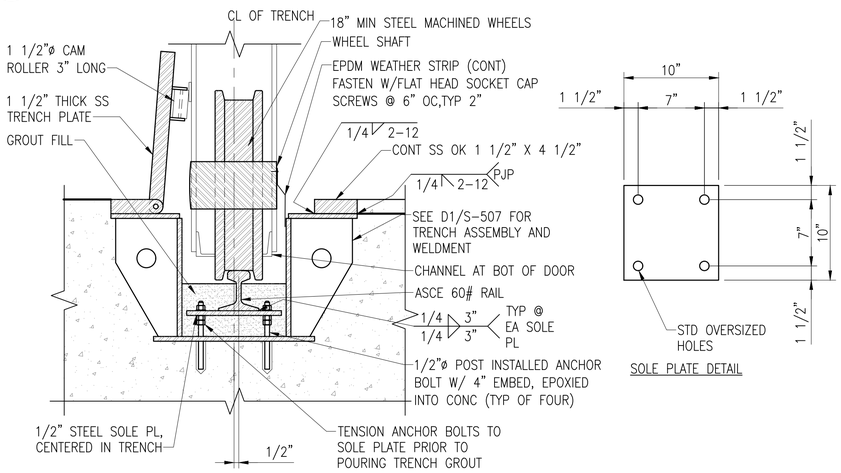

C1/S-301 A1/S-401 **B1** TRENCH AT MAGAZINE WITH OPEN GATE

SCALE: 1 1/2" = 1'-0"

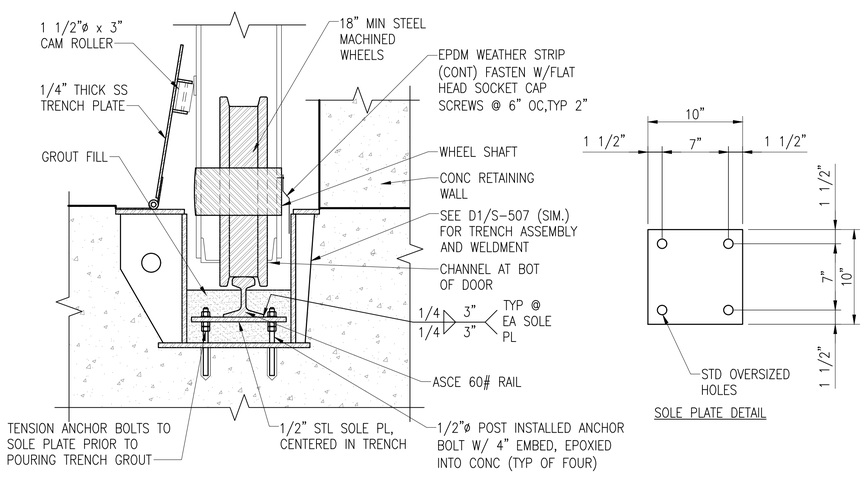

C1 S-401 **A1** TRENCH AT RETAINING WALL

SCALE: 1 1/2" = 1'-0"

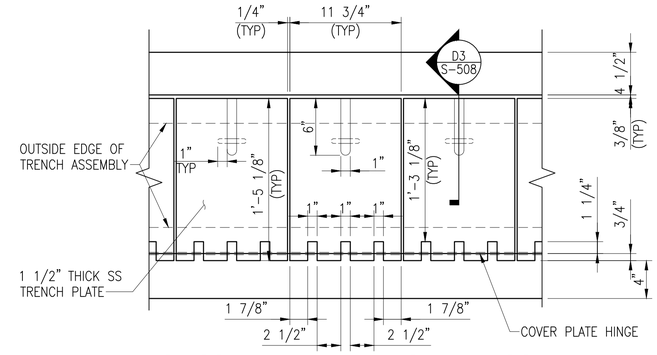

C1 S-401 **D3** TRENCH COVER PLATE AT MAGAZINE DOOR

SCALE: 1 1/2" = 1'-0"

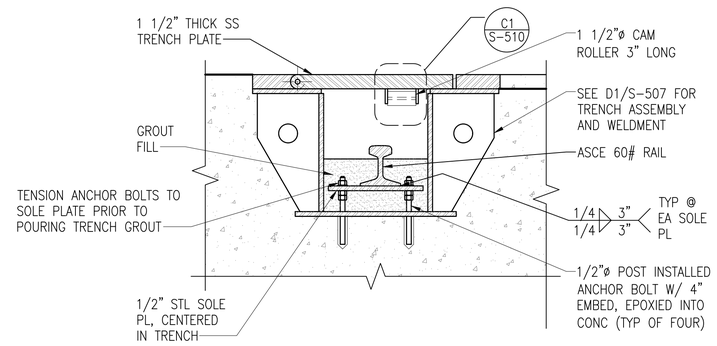

C1 S-401 **B3** TRENCH AT MAGAZINE WITH CLOSED COVER

SCALE: 1 1/2" = 1'-0"

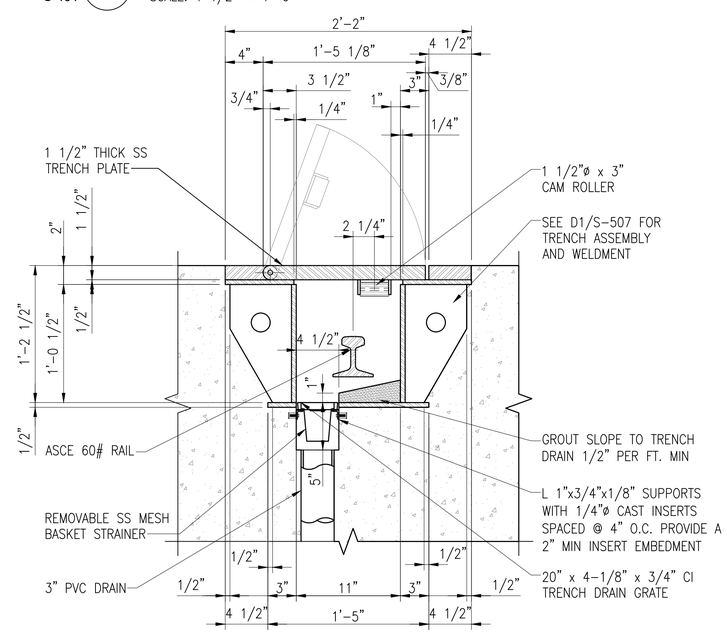

A1 S-401 **A3** TRENCH AT MAGAZINE AT DRAIN

SCALE: 1 1/2" = 1'-0"

GRAPHIC SCALES

SCALE: 1 1/2" = 1'-0" 0 6" 1' 2'

MARK	DESCRIPTION	DATE

NAVFAC

SEAL

A/E INFO

APPROVED

FOR COMMANDER NAVFAC

ACTIVITY: Approved by LCDR VINCE DEL GRECO, ROICC with PWD YORKTOWN, via Email.

SATISFACTORY TO DATE 03/26/2026

DES VAA | DRW MTW | CHK CWJ

PM/DM MME/WJW

BRANCH MANAGER DLB

CHIEF ENG/ARCH JWJ

FIRE PROTECTION HPN

DEPARTMENT OF THE NAVY
NAVAL FACILITIES ENGINEERING SYSTEMS COMMAND
MIDLANT PDC CORE

NAVAL FACILITIES ENGINEERING SYSTEMS COMMAND
NAVAL STATION NORFOLK, VIRGINIA

NAVAL WEAPONS STATION
YORKTOWN, VIRGINIA

P-171 WEAPONS MAGAZINES

DOOR, TRENCH AND COVER DETAILS

SCALE: AS SHOWN

EPROJECT NO.: 1737010

CONSTR. CONTR. NO. ##

NAVFAC DRAWING NO. 12941999

SHEET 341 OF 499

S-507

DRAWFORM REVISION: 14 SEP 2023

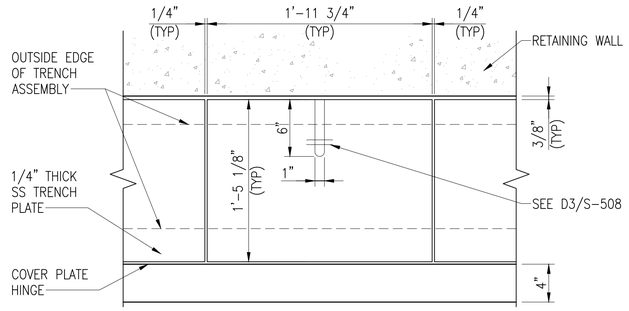

C1 S-401 D1 TRENCH COVER PLATE AT RETAINING WALL
SCALE: 1 1/2" = 1'-0"

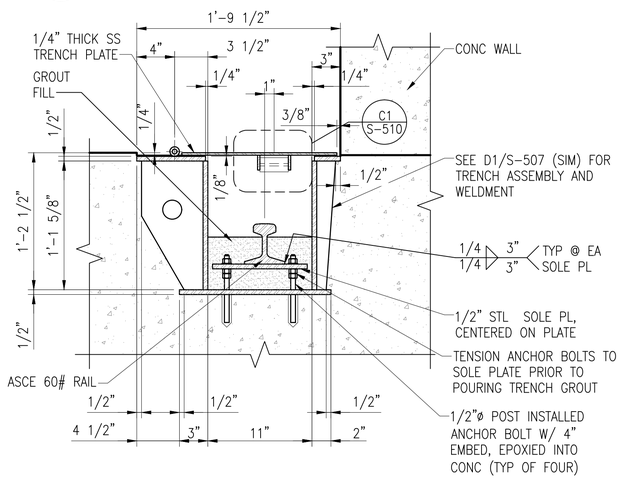

A1 S-401 B1 TRENCH AT RETAINING WALL WITH CLOSED COVER
SCALE: 1 1/2" = 1'-0"

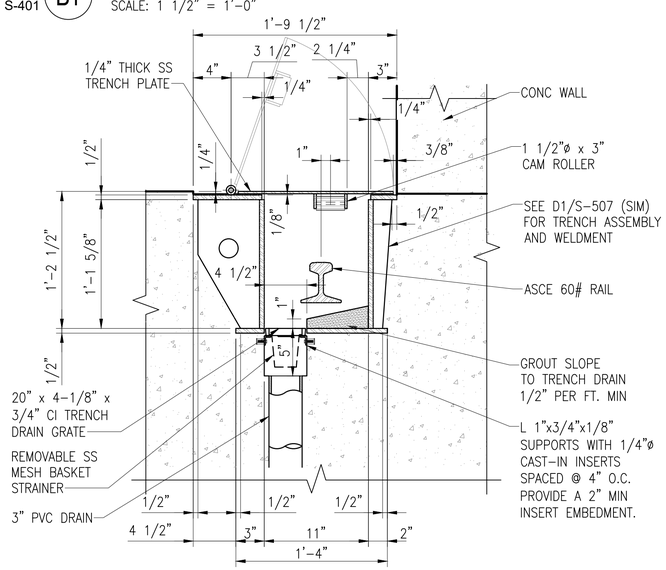

A1 S-401 A1 TRENCH AT RETAINING WALL AT DRAIN
SCALE: 1 1/2" = 1'-0"

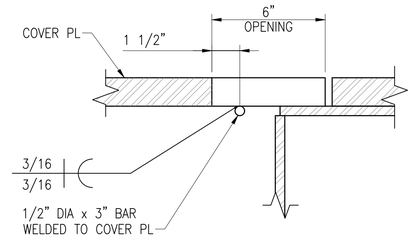

D3 S-507 D3 DETAIL - TRENCH PLATE MANUAL LIFT
SCALE: 3" = 1'-0"

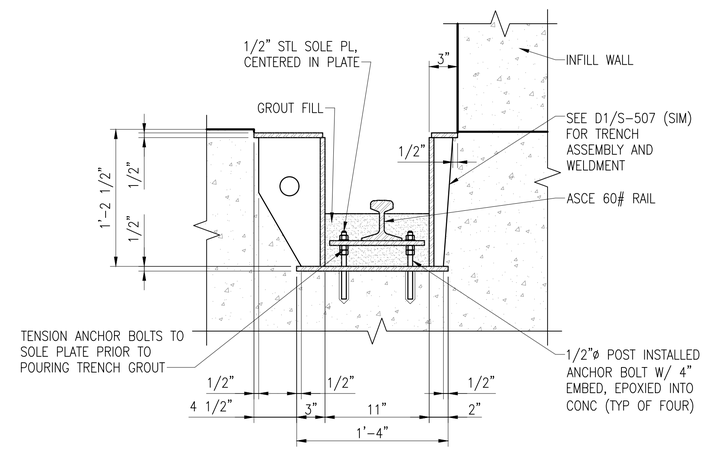

A1/C1 S-401 B3 TRENCH AT PILASTER WITHOUT COVER
SCALE: 1 1/2" = 1'-0"

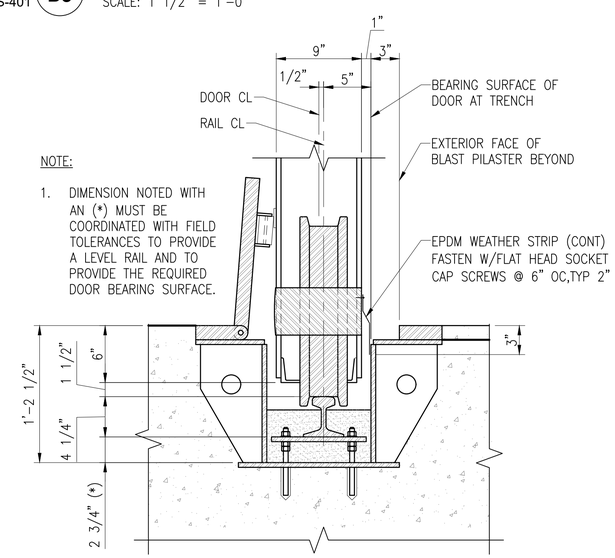

A3 DOOR ALIGNMENT AT TRENCH
SCALE: 1 1/2" = 1'-0"

GRAPHIC SCALES
SCALE: 1 1/2" = 1'-0" 0 6" 1' 2'
SCALE: 3" = 1'-0" 0 3" 6" 1'

MARK	DESCRIPTION	DATE

NAVFAC

SEAL

A/E INFO

APPROVED
FOR COMMANDER NAVFAC

ACTIVITY
Approved by LCDR VINCE DEL GRECO, ROICC with PWD YORKTOWN, via Email.

SATISFACTORY TO DATE 03/26/2026

DES VAA	DRW MTW	CHK CWJ	
PM/DM	MME/WJW		
BRANCH MANAGER	DLB		
CHIEF ENG/ARCH	JWJ		
FIRE PROTECTION	HPN		

DEPARTMENT OF THE NAVY
NAVAL FACILITIES ENGINEERING SYSTEMS COMMAND
MIDLANT PDC CORE
NAVAL FACILITIES ENGINEERING SYSTEMS COMMAND
NAVAL STATION NORFOLK, VIRGINIA
NAVAL WEAPONS STATION
YORKTOWN, VIRGINIA
P-171 WEAPONS MAGAZINES
DOOR, TRENCH AND COVER DETAILS

SCALE: AS SHOWN
EPROJECT NO.: 1737010
CONSTR. CONTR. NO.: ##
NAVFAC DRAWING NO.: 12942000
SHEET 342 OF 499
S-508

DRAWFORM REVISION: 14 SEP 2023

GENERAL PLOW NOTES:

1. ALL PLATES ARE 1/4" THICK PLATE UNLESS NOTED OTHERWISE IN DETAILS.
2. WELD ALL JOINTS 3/16" FILLET UNLESS NOTED OTHERWISE.
3. DIMENSIONS NOTED WITH AN (*) MUST BE COORDINATED WITH PLOW MANUFACTURER ENSURING THAT DOOR TRENCH COVER ROLLER HAS A SMOOTH TRANSITION BETWEEN CLOSED AND OPEN POSITIONS.

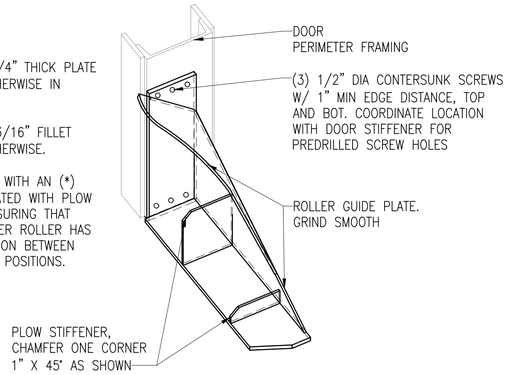

C1 DETAIL - PLATE PLOW ISOMETRIC VIEW
SCALE: 1 1/2" = 1'-0"

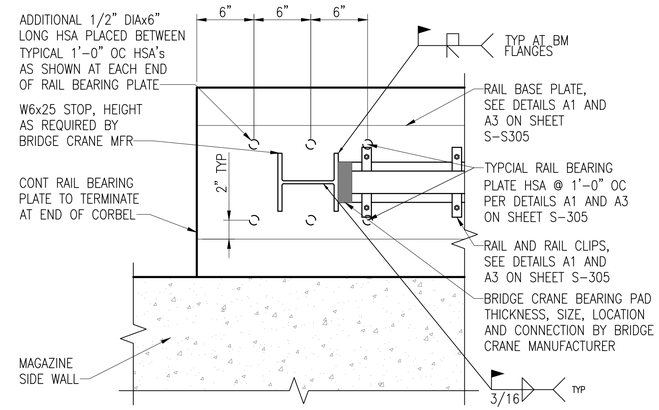

A1 S-102 C3 BRIDGE CRANE RAIL STOP
SCALE: 1 1/2" = 1'-0"

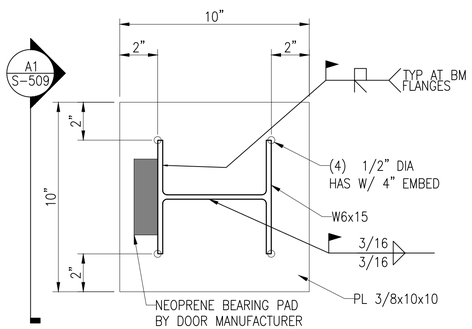

A1/C1 S-204 B1 DETAIL - DOOR STOP
SCALE: 3" = 1'-0"

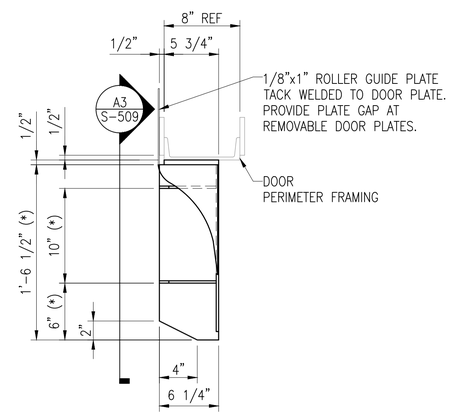

B3 DETAIL - PLATE PLOW PLAN
SCALE: 1 1/2" = 1'-0"

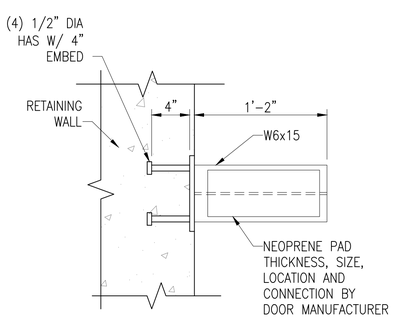

B1 S-509 A1 SECTION - DOOR STOP
SCALE: 1 1/2" = 1'-0"

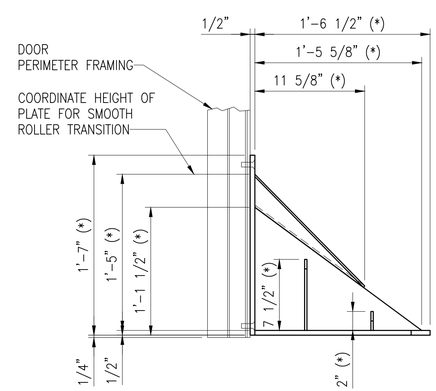

B3 S-509 A3 DETAIL - PLATE PLOW SIDE ELEVATION
SCALE: 1 1/2" = 1'-0"

GRAPHIC SCALES
SCALE: 1 1/2" = 1'-0" 0 6" 1' 2'
SCALE: 3" = 1'-0" 0 3" 6" 1'

MARK	DESCRIPTION	DATE

SEAL

A/E INFO

APPROVED
FOR COMMANDER NAVFAC

ACTIVITY
Approved by LCDR VINCE DEL GRECO, ROICC with PWD YORKTOWN, via Email.

SATISFACTORY TO DATE 03/26/2026

DES VAA	DRW MTW	CHK CWJ	
PM/DM	MME/WJW		
BRANCH MANAGER	DLB		
CHIEF ENG/ARCH	JWJ		
FIRE PROTECTION	HPN		

DEPARTMENT OF THE NAVY
NAVAL FACILITIES ENGINEERING SYSTEMS COMMAND
MIDLANT PDC CORE
NAVAL FACILITIES ENGINEERING SYSTEMS COMMAND
NAVAL STATION NORFOLK, VIRGINIA
NAVAL WEAPONS STATION
YORKTOWN, VIRGINIA
P-171 WEAPONS MAGAZINES
DOOR STOP PLOW AND TRENCH COVER ROLLER DETAILS

SCALE: AS SHOWN
EPROJECT NO.: 1737010
CONSTR. CONTR. NO. ##
NAVFAC DRAWING NO. 12942001
SHEET 343 OF 499
S-509

DRAWFORM REVISION: 14 SEP 2023

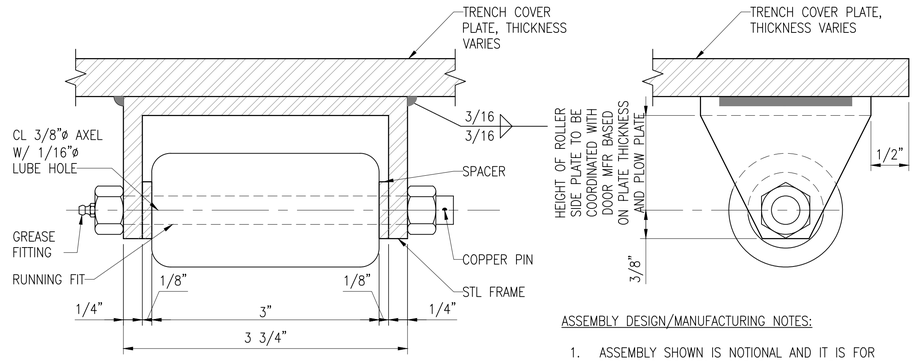

ASSEMBLY DESIGN/MANUFACTURING NOTES:

1. ASSEMBLY SHOWN IS NOTIONAL AND IT IS FOR BIDDING PURPOSES. ASSEMBLY MAY VARY BASED ON DOOR MANUFACTURER'S DESIGN.

B3/S-507
B1/S-508
C1

TYPICAL TRENCH COVER ROLLER

SCALE: 1–0" = 1'–0"

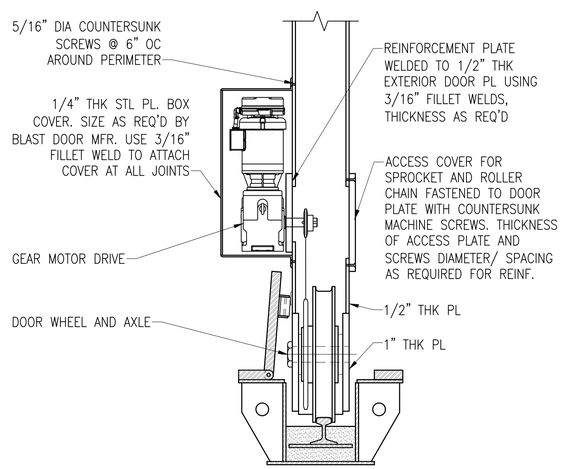

DESIGN/MANUFACTURING NOTES:

1. MOTOR INSTALLATION SHOWN IS NOTIONAL AND IS FOR BIDDING PURPOSES AND MAY VARY BASED ON DOOR MANUFACTURER'S APPROVED DESIGN.
2. DOOR MANUFACTURER'S DESIGN MUST ALLOW FOR MAINTENANCE OF THE MOTOR ASSEMBLY AND ITS COMPONENTS, INCLUDING REMOVAL OF AND REPLACEMENT OF THE MOTOR ASSEMBLY.
3. USE STANDARD PARTS AS MUCH AS POSSIBLE.
4. ACCESS TO THE MOTOR ASSEMBLY IS NOT NECESSARILY LIMITED TO ONE SIDE OF THE DOOR. IF ACCESS TO BOTH SIDES OF THE DOOR IS USED, IT MUST BE SHOWN THAT THE WHEEL LOAD PATH THROUGH THE SUPPORTING PLATES IS ADEQUATE.
5. A MOTOR ASSEMBLY MOUNTED INTERNAL TO THE DOOR IS PREFERRED; HOWEVER, A MOTOR ASSEMBLY MOUNTED ON THE EXTERIOR OF THE DOOR MAY BE ACCEPTABLE IF APPROVED.

B1

DETAIL - DOOR ALTERNATIVE DRIVE ARRANGEMENT

SCALE: 1" = 1'–0"

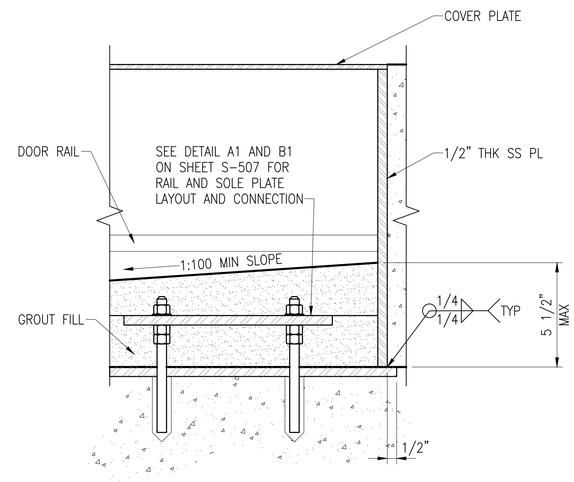

A1
S-401
B3

DETAIL - TRENCH END PLATE

SCALE: 3" = 1'–0"

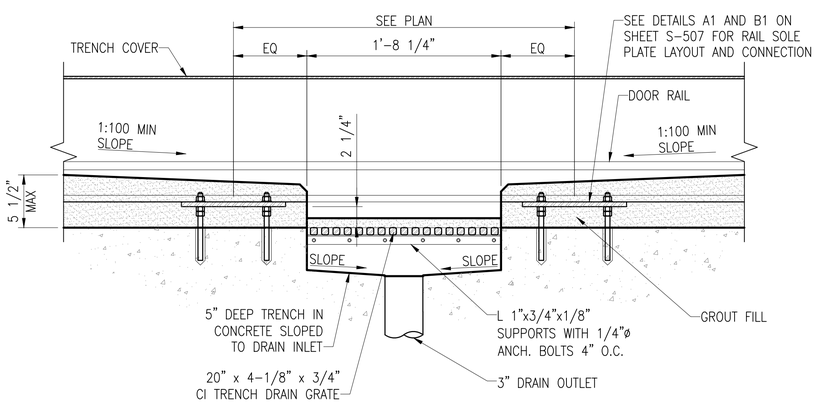

A1
S-401
A1

TRENCH DRAIN BLOCKOUT

SCALE: 1" = 1'–0"

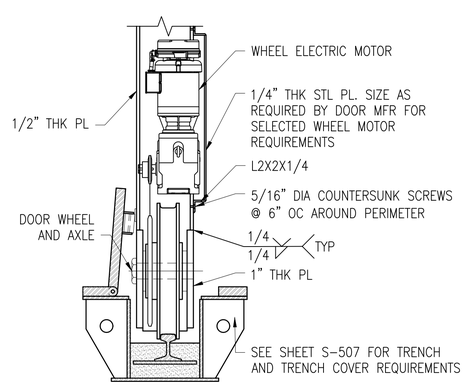

DESIGN/MANUFACTURING NOTES:

1. MOTOR INSTALLATION SHOWN IS NOTIONAL AND IS FOR BIDDING PURPOSES AND MAY VARY BASED ON DOOR MANUFACTURER'S APPROVED DESIGN.
2. DOOR MANUFACTURER'S DESIGN MUST ALLOW FOR MAINTENANCE OF THE MOTOR ASSEMBLY AND ITS COMPONENTS, INCLUDING REMOVAL OF AND REPLACEMENT OF THE MOTOR ASSEMBLY.
3. USE STANDARD PARTS AS MUCH AS POSSIBLE.
4. ACCESS TO THE MOTOR ASSEMBLY IS NOT NECESSARILY LIMITED TO ONE SIDE OF THE DOOR. IF ACCESS TO BOTH SIDES OF THE DOOR IS USED, IT MUST BE SHOWN THAT THE WHEEL LOAD PATH THROUGH THE SUPPORTING PLATES IS ADEQUATE.
5. A MOTOR ASSEMBLY MOUNTED INTERNAL TO THE DOOR IS PREFERRED; HOWEVER, A MOTOR ASSEMBLY MOUNTED ON THE EXTERIOR OF THE DOOR MAY BE ACCEPTABLE IF APPROVED.
6. SEE DETAIL B1 ON SHEET S–510 FOR ALTERNATIVE DOOR DRIVE ARRANGEMENT.
7. DOOR MANUFACTURER MUST PROVIDE COOLING OF THE GEAR MOTOR IF FOUND NECESSARY.

A1
S-702
A3

DETAIL - DOOR WHEEL

SCALE: 1" = 1'–0"

GRAPHIC SCALES

SCALE: 1" = 1'–0" 0 6" 1' 2'

SCALE: 1 1/2" = 1'–0" 0 6" 1' 2'

MARK	DESCRIPTION	DATE

NAVFAC

SEAL

A/E INFO

APPROVED
FOR COMMANDER NAVFAC

ACTIVITY
Approved by LCDR VINCE DEL GRECO, ROICC with PWD YORKTOWN, via Email.

SATISFACTORY TO DATE 03/26/2026

DES VAA	DRW MTW	CHK CWJ	
PM/DM	MME/WJW		
BRANCH MANAGER	DLB		
CHIEF ENG/ARCH	JWJ		
FIRE PROTECTION	HPN		

DEPARTMENT OF THE NAVY
NAVAL FACILITIES ENGINEERING SYSTEMS COMMAND
MIDLANT PDC CORE

NAVAL FACILITIES ENGINEERING SYSTEMS COMMAND
NAVAL STATION NORFOLK, VIRGINIA

NAVAL WEAPONS STATION
YORKTOWN, VIRGINIA

P-171 WEAPONS MAGAZINES

DOOR STOP PLOW AND TRENCH COVER ROLLER DETAILS

SCALE: AS SHOWN
EPROJECT NO.: 1737010
CONSTR. CONTR. NO. ##
NAVFAC DRAWING NO. 12942002
SHEET 344 OF 499

S-510

DRAWFORM REVISION: 14 SEP 2023

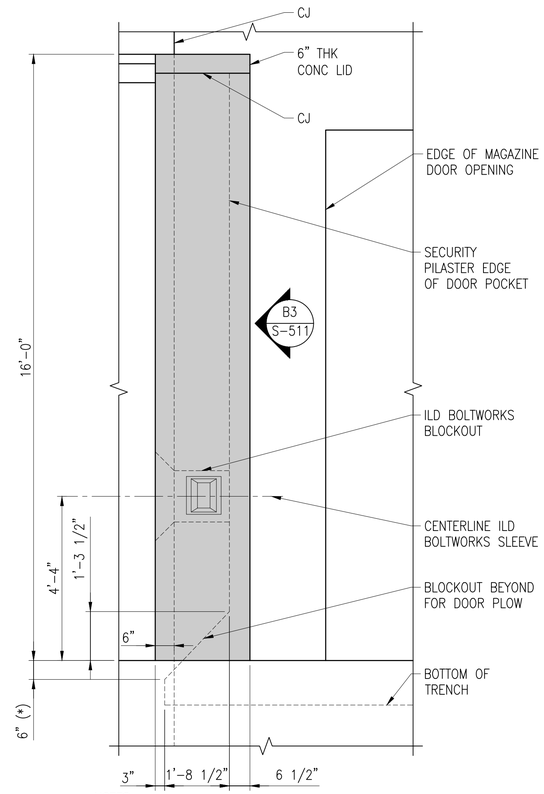

NOTES:
1. DIMENSIONS NOTED WITH AN (*) MUST BE COORDINATED BY THE DOOR MANUFACTURER ENSURING THE DOOR SYSTEM PERFORMS PER THE BLAST DOOR NOTES ON SHEET S-003

A1 S-204 B1 SECURITY PILASTER ELEVATION FROM FRONT OF MAGAZINE
SCALE: 1/2" = 1'-0"

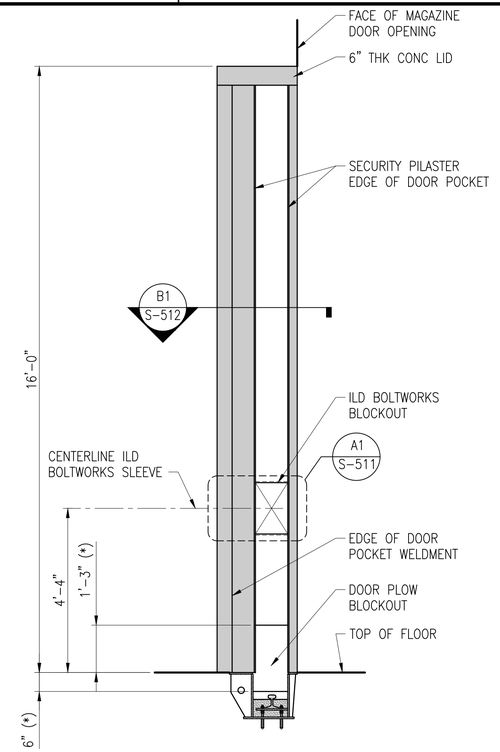

NOTES:
1. DIMENSIONS NOTED WITH AN (*) MUST BE COORDINATED BY THE DOOR MANUFACTURER ENSURING THE DOOR SYSTEM PERFORMS PER THE BLAST DOOR NOTES ON SHEET S-003.

B1 S-511 B3 SECURITY PILASTER ELEVATION
SCALE: 1/2" = 1'-0"

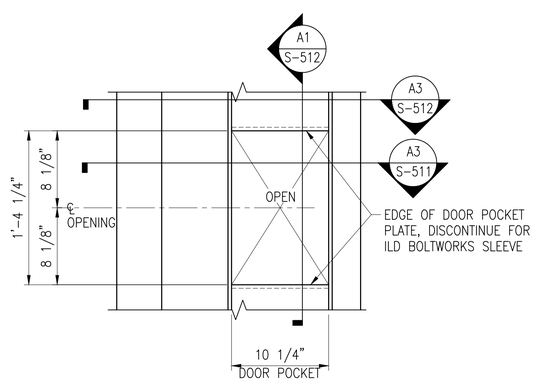

B3 S-511 A1 ILD BOLTSWORKS BLOCKOUT
SCALE: 1 1/2" = 1'-0"

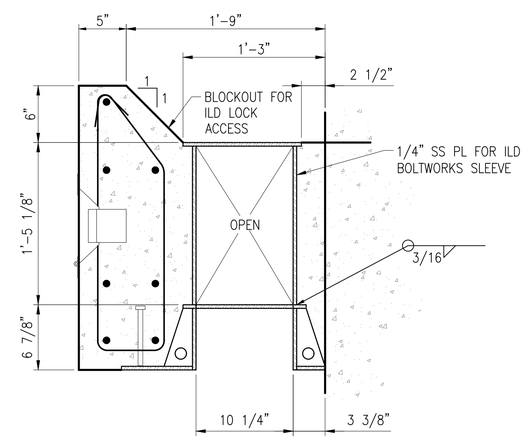

A1 S-511 A3 SECURITY PILASTER PLAN
SCALE: 1 1/2" = 1'-0"

GRAPHIC SCALES
SCALE: 1/2" = 1'-0" 0 1' 2' 4'
SCALE: 1 1/2" = 1'-0" 0 6" 1' 2'

MARK	DESCRIPTION	DATE

NAVFAC

SEAL

A/E INFO

APPROVED
FOR COMMANDER NAVFAC

ACTIVITY
Approved by LCDR VINCE DEL GRECO, ROICC with PWD YORKTOWN, via Email.

SATISFACTORY TO DATE 03/26/2026

DES VAA	DRW MTW	CHK CWJ	
PM/DM	MME/WJW		
BRANCH MANAGER	DLB		
CHIEF ENG/ARCH	JWJ		
FIRE PROTECTION	HPN		

DEPARTMENT OF THE NAVY
NAVAL FACILITIES ENGINEERING SYSTEMS COMMAND
MIDLANT PDC CORE
NAVAL FACILITIES ENGINEERING SYSTEMS COMMAND
NAVAL STATION NORFOLK, VIRGINIA
NAVAL WEAPONS STATION
YORKTOWN, VIRGINIA
P-171 WEAPONS MAGAZINES
SECURITY PILASTER DETAILS

SCALE: AS SHOWN
EPROJECT NO.: 1737010
CONSTR. CONTR. NO. ##
NAVFAC DRAWING NO. 12942003
SHEET 345 OF 499
S-511
DRAWFORM REVISION: 14 SEP 2023

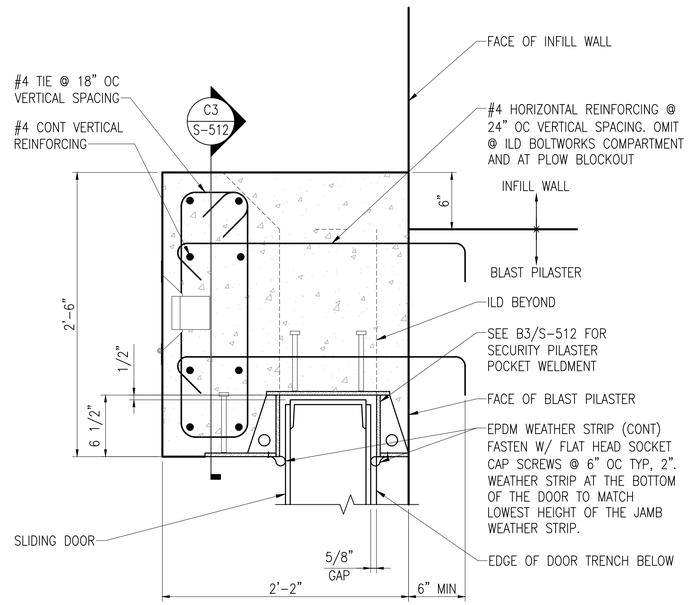

B3 / S-511 **B1** SECTION - TYP SECURITY PILASTER
SCALE: 1 1/2" = 1'-0"

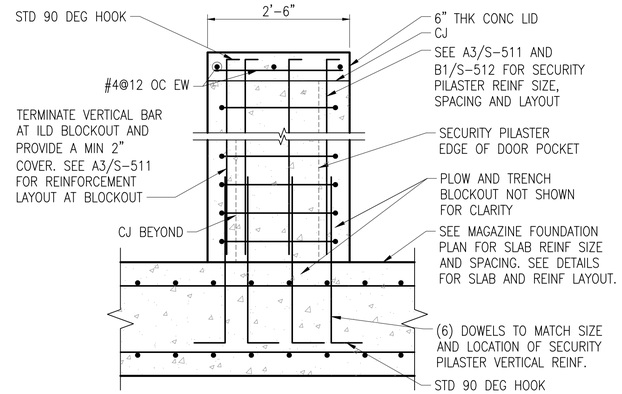

B1 / S-512 **C3** SECURITY PILASTER REINFORCEMENT
SCALE: 3/4" = 1'-0"

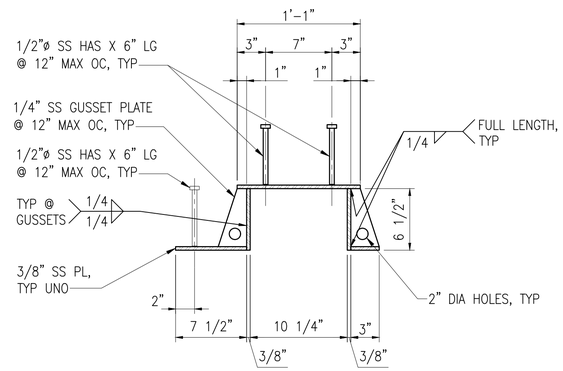

B3 DETAIL - TYP SECURITY PILASTER POCKET WELDMENT
SCALE: 1 1/2" = 1'-0"

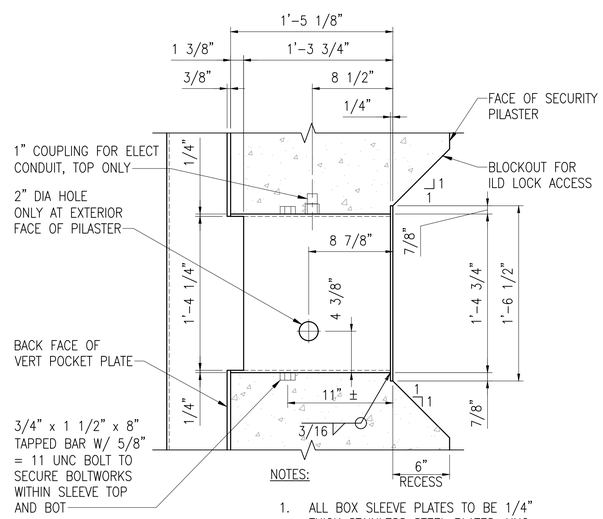

NOTES:

1. ALL BOX SLEEVE PLATES TO BE 1/4" THICK STAINLESS STEEL PLATES, UNO.
2. ALL WELDS AT EXTERIOR OF BOX ONLY

A1 / S-511 **A1** DETAIL - ILD BOLTWORKS SLEEVE
SCALE: 1 1/2" = 1'-0"

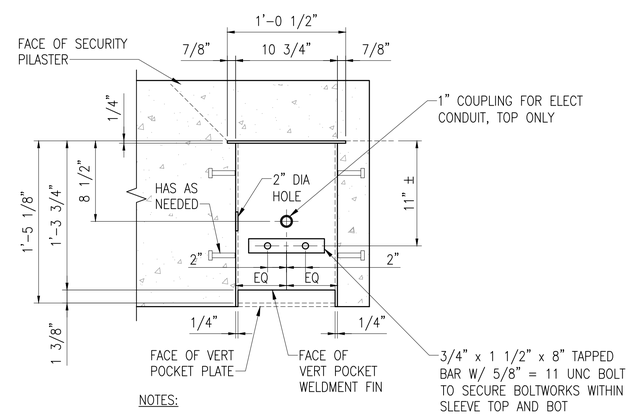

NOTES:

1. ALL BOX SLEEVE PLATES TO BE 1/4" THICK STAINLESS STEEL PLATES, UNO.
2. ALL WELDS AT EXTERIOR OF BOX ONLY

A1 / S-511 **A3** SECTION - TYP SECURITY PILASTER
SCALE: 1 1/2" = 1'-0"

GRAPHIC SCALES

SCALE: 3/4" = 1'-0" 0 1' 2' 4'

SCALE: 1 1/2" = 1'-0" 0 6" 1' 2'

MARK	DESCRIPTION	DATE

NAVFAC

SEAL

A/E INFO

APPROVED
FOR COMMANDER NAVFAC

ACTIVITY
Approved by LCDR VINCE DEL GRECO, ROICC with PWD YORKTOWN, via Email.

SATISFACTORY TO DATE	03/26/2026
DES VAA	DRW MTW / CHK CWJ
PM/DM	MME/WJW
BRANCH MANAGER	DLB
CHIEF ENG/ARCH	JWJ
FIRE PROTECTION	HPN

DEPARTMENT OF THE NAVY
NAVAL FACILITIES ENGINEERING SYSTEMS COMMAND
MIDLANT PDC CORE
NAVAL FACILITIES ENGINEERING SYSTEMS COMMAND
NAVAL STATION NORFOLK, VIRGINIA
NAVAL WEAPONS STATION
YORKTOWN, VIRGINIA
P-171 WEAPONS MAGAZINES
SECURITY PILASTER DETAILS

SCALE:	AS SHOWN
EPROJECT NO.:	1737010
CONSTR. CONTR. NO.	##
NAVFAC DRAWING NO.	12942004
SHEET	346 OF 499

S-512

DRAWFORM REVISION: 14 SEP 2023

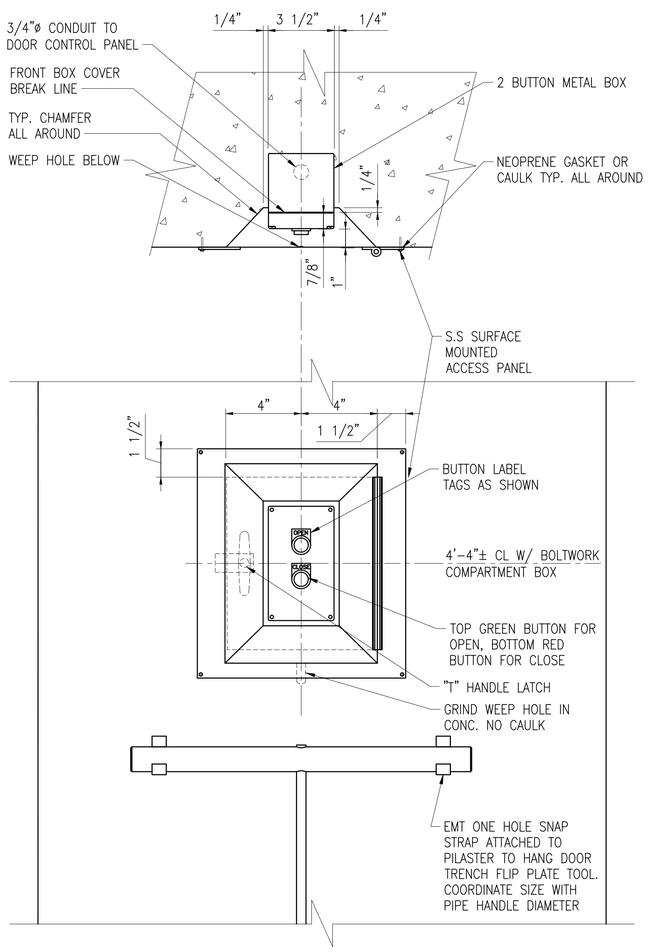

A1 2 BUTTON DOOR CONTROL CAST INTO CONC. PILASTER W/ ACCESS DOOR

SCALE: 3" = 1'-0"

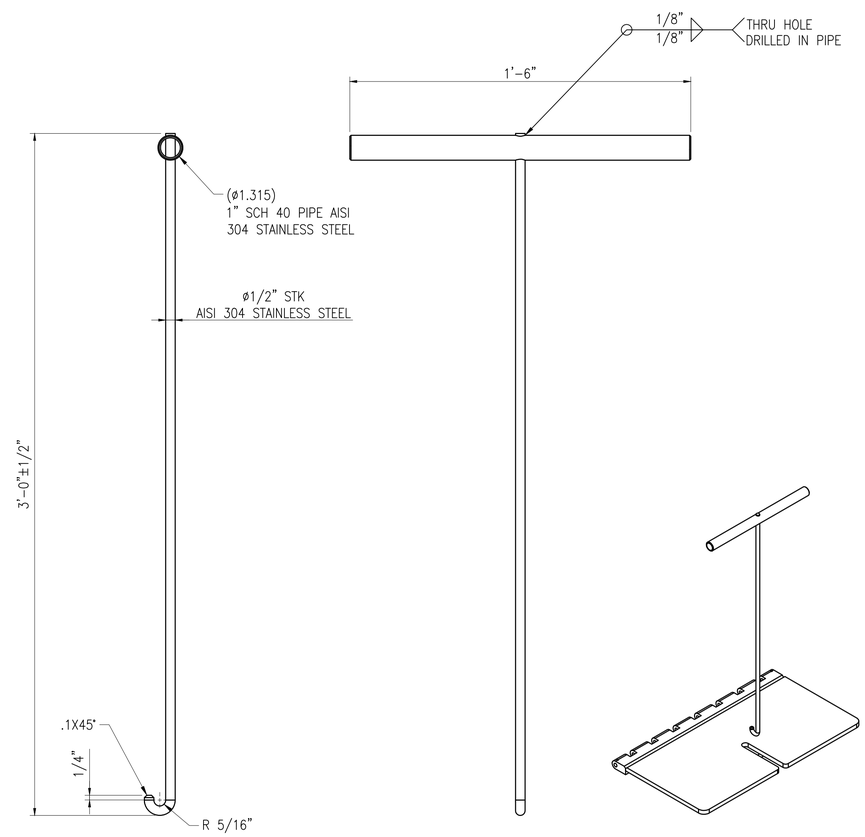

A4 TRENCH COVER PLATE FLIPPING TOOL (SUPPLY TWO FOR EACH MAGAZINE)

SCALE: 3" = 1'-0"

GRAPHIC SCALES

SCALE: 3" = 1'-0" 0 3" 6" 1'

MARK	DESCRIPTION	DATE

NAVFAC

SEAL

A/E INFO

APPROVED

FOR COMMANDER NAVFAC

ACTIVITY
Approved by LCDR VINCE DEL GRECO, ROICC with PWD YORKTOWN, via Email.

SATISFACTORY TO DATE 03/26/2026

DES	VAA	DRW MTW	CHK CWJ
PM/DM	MME/WJW		
BRANCH MANAGER	DLB		
CHIEF ENG/ARCH	JWJ		
FIRE PROTECTION	HPN		

DEPARTMENT OF THE NAVY
NAVAL FACILITIES ENGINEERING SYSTEMS COMMAND
MIDLANT PDC CORE

NAVAL FACILITIES ENGINEERING SYSTEMS COMMAND
NAVAL STATION NORFOLK, VIRGINIA

NAVAL WEAPONS STATION
YORKTOWN, VIRGINIA

P-171 WEAPONS MAGAZINES

MISCELLANENOUS DETAILS

SCALE: AS SHOWN

EPROJECT NO.: 1737010

CONSTR. CONTR. NO.
##

NAVFAC DRAWING NO.
12942005

SHEET 347 OF 499

S-513

DRAWFORM REVISION: 14 SEP 2023

MINIMUM TENSION LAP SPLICE LENGTHS ("1.3l_d")			MINIMUM EMBEDMENT LENGTHS FOR STANDARD END HOOKS ("l_{dh}")	
BAR SIZE	f' = 5,000 PSI			
	TOP BARS	OTHER BARS	BAR SIZE	f' ≥ 5,000 PSI
#3	31.2	31.2	#3	6
#4	36.9	31.2	#4	8
#5	46.1	35.5	#5	10
#6	55.4	42.6	#6	12
#7	80.7	62.1	#7	13
#8	92.3	71.0	#8	15
#9	104.1	80.1	#9	17
#10	117.2	90.1	#10	19
#11	130.1	100.1	#11	22

NOTES:

1. IF CONCRETE COVER IS NOT GREATER THAN THE DIAMETER OF THE BAR OR THE CENTER TO CENTER SPACING IS NOT GREATER THAN (3) BAR DIAMETERS, THEN VALUES MUST BE INCREASED BY 50%. ALL LAPS ARE TYPICAL TENSION LAP SPLICES U.N.O. ON PLANS OR DETAILS.
2. "TOP BARS" ARE HORIZONTAL BARS WITH MORE THAN 12 INCH DEPTH OF CONCRETE CAST BELOW THEM.
3. LAPS SPLICES AND EMBEDMENT LENGTHS SHOWN IN THIS DETAIL ARE BASED ON A DYNAMIC INCREASE FACTOR = 1.29. LAPS FOR REINFORCEMENT IN STRUCTURAL COMPONENTS NOT RELATED TO BLAST DESIGN (WING WALLS, FOUNDATIONS, SLAB-ON-GRADE) MAY BE REDUCED BY THE DYNAMIC INCREASE FACTOR. LAP SPLICES FOR REINFORCEMENT IN BLAST COMPONENTS (HEADER BEAM, HEADWALL, INFILL WALLS, ROOF SLAB, SIDE/ END WALLS, PILASTERS) MAY NOT BE REDUCED BY THE DYNAMIC INCREASE FACTOR.
4. WHEN SPLICING BARS OF DIFFERENT SIZES, THE LAP SPLICE LENGTH MUST BE THE GREATER OF THE SPLICE LENGTH OF THE SMALLER BAR OR THE DEVELOPMENT LENGTH OF THE LARGER BAR.

C1 REINFORCING SPLICE SCHEDULE

SCALE: NONE

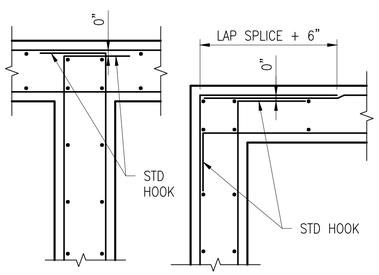

NOTES:

1. ALL HOOKS MUST BE STD 90 DEGREE HOOKS UNO.
2. SEE DRAWINGS FOR ADDITIONAL HORIZONTAL BARS. STAGGER BETWEEN TYPICAL REINF SPACING, EXTEND TO 1/5 OF DISTANCE TO NEAREST ADJACENT WALL IN EACH DIRECTION, UNO.

B1 WALL REINFORCEMENT AT CORNERS AND INTERSECTONS

SCALE: NONE

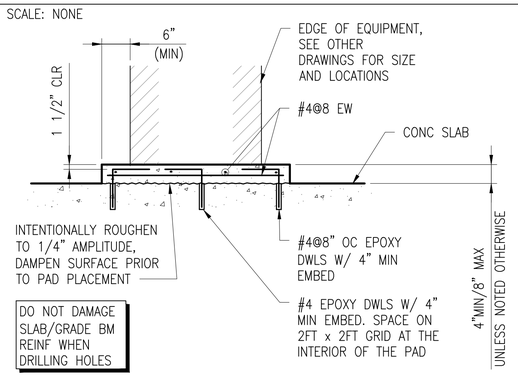

A1 TYPICAL MISCELLANEOUS HOUSEKEEPING PAD (INTERIOR)

SCALE: NONE

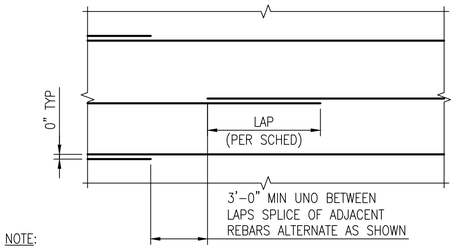

NOTE:

1. APPLIES TO FOUNDATION SLABS (BOTH DIRECTIONS) AND WALLS (HORIZONTAL ONLY), UNO.

D3 REINFORCING SPLICE

SCALE: NONE

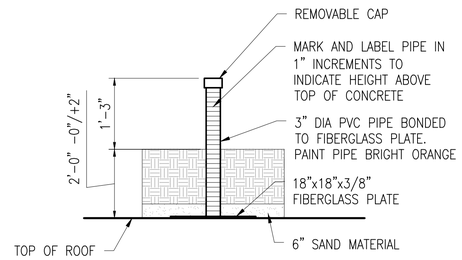

C3 DEPTH GAUGE DETAIL

SCALE: NONE

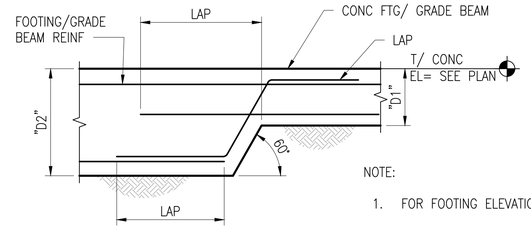

NOTE:

1. FOR FOOTING ELEVATION SEE SHEET S-201.
2. SEE DETAILS FOR FOOTING REINFORCEMENT AND LAYOUT.

B3 TYPICAL BOTTOM STEP FOOTING / GRADE BEAM

SCALE: NONE

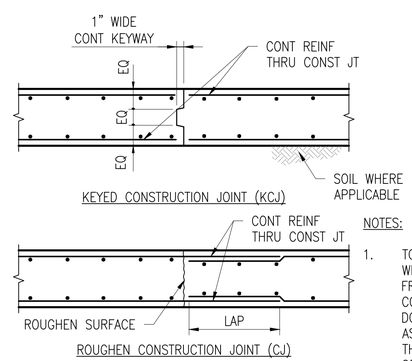

NOTES:

1. TO BE USED ONLY WHERE CALLED FROM IN THE CONTRACT DOCUMENTS, OR AS PERMITTED BY THE CONTRACTING OFFICER.

A3 CONSTRUCTION JOINT DETAIL

SCALE: NONE

MARK	DESCRIPTION	DATE

NAVFAC

SEAL

A/E INFO

APPROVED
James E. Donahue, R.A.
FOR COMMANDER NAVFAC

ACTIVITY
Approved by LCDR VINCE DEL GRECO, ROICC with PWD YORKTOWN, via Email.

SATISFACTORY TO DATE 03/26/2026

DES VAA | DRW MTW | CHK CWJ
PM/DM MME/WJW
BRANCH MANAGER DLB
CHIEF ENG/ARCH JWJ
FIRE PROTECTION HPN

DEPARTMENT OF THE NAVY
NAVAL FACILITIES ENGINEERING SYSTEMS COMMAND
MIDLANT PDC CORE
NAVAL FACILITIES ENGINEERING SYSTEMS COMMAND
NAVAL STATION NORFOLK, VIRGINIA
NAVAL WEAPONS STATION
YORKTOWN, VIRGINIA
P-171 WEAPONS MAGAZINES
STANDARD DETAILS

SCALE: AS SHOWN
EPROJECT NO.: 1737010
CONSTR. CONTR. NO. ##
NAVFAC DRAWING NO. 12942006
SHEET 348 OF 499

S-514

DRAWFORM REVISION: 14 SEP 2023

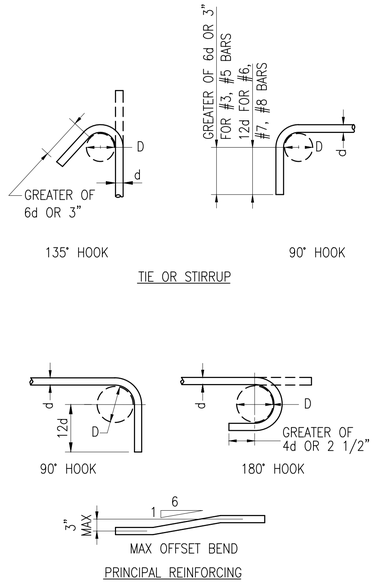

BAR SIZE	D
#3	1.5
#4	2
#5	2.5
#6	4.5
#7	5.25
#8	6

BAR SIZE	D
#3	2.25
#4	3
#5	3.75
#6	4.5
#7	5.25
#8	6
#9	9.5
#10	11
#11	12

NOTES:
D = FINISHED INSIDE BEND DIAMETER
d = BAR DIAMETER

C1 HOOK DIMENSIONS
SCALE: NONE

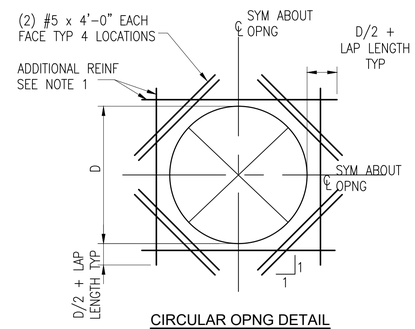

CIRCULAR OPNG DETAIL
EXTRA REINFORCING AROUND MECH. DUCTWORK OPENINGS

C2 EXTRA REINFORCING AROUND MECH. DUCTWORK OPENINGS
SCALE: NONE

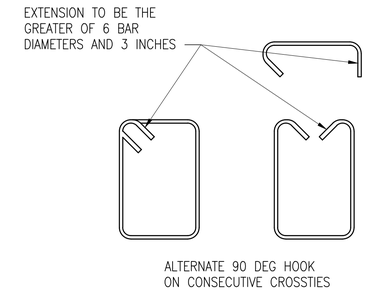

NOTE:

1. THIS IS A GENERAL DETAIL ONLY, UNO, AND THE STIRRUPS FOR THE HEADER BEAM PILASTER, HEADWALL AND ROOF MUST BE BENT AS SHOWN IN THEIR CORRESPONDING DETAILS.
2. USING A U STIRRUP WITH A CROSS-TIE INSTEAD OF A CLOSED TIE IS ACCEPTABLE FOR BEAMS ONLY, PER ACI 318-19 PARAGRAPH 9.7.7.

D4 SEISMIC HOOP CLOSED STIRRUP/ TIE DETAIL
SCALE: NONE

NOTES:

1. PROVIDE ADDITIONAL REINFORCING THE SAME SIZE AS DISCONTINUOUS REINFORCEMENT AT OPENING. QUANTITY OF REINFORCING IN EACH DIRECTION MUST BE EQUAL TO OR ONE GREATER THAN THE NUMBER OF DISCONTINUOUS BARS. PLACE 1/2 OF ADDITIONAL REINFORCING BARS EACH SIDE OF OPENING. PLACE ADDITIONAL REINFORCEMENT AT 3" OC (TYPICAL BOTH DIRECTIONS AND ALL LAYERS OF REINFORCEMENT). START FIRST BAR 2" CLEAR TO OPENING.
2. EXTEND ADDITIONAL REINFORCING BEYOND EDGE OF OPENING AS SHOWN. ADDITIONAL BARS MAY TERMINATE AT THE END OF THE WALL OR INTO THE SLAB WITH A STANDARD HOOK WHERE THE LENGTH OF THE WALL OR SLAB WILL NOT PERMIT BARS TO EXTEND AS SHOWN.
3. TYPICAL WALL OR SLAB REINFORCING NOT SHOWN FOR CLARITY. TERMINATE TYPICAL REINFORCING 2" CLEAR TO OPENING.
4. ADDITIONAL REINFORCING AS SHOWN IS REQUIRED IN ANY CASE FOR SLABS, WALLS, AND FOUNDATIONS WHERE THE OPENING SIZE IS GREATER THAN THE SPACING OF REINFORCING IN EITHER DIRECTION MINUS 4" OF CONCRETE COVER (2" COVER EACH SIDE OF OPENING).

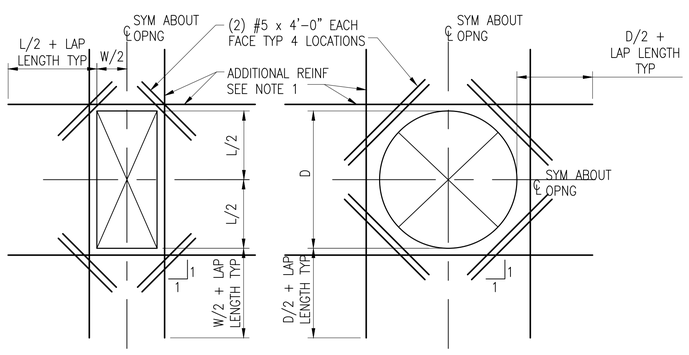

RECTANGULAR OPNG DETAIL
CIRCULAR OPNG DETAIL

A1 EXTRA REINFORCING AROUND OPENINGS
SCALE: NONE

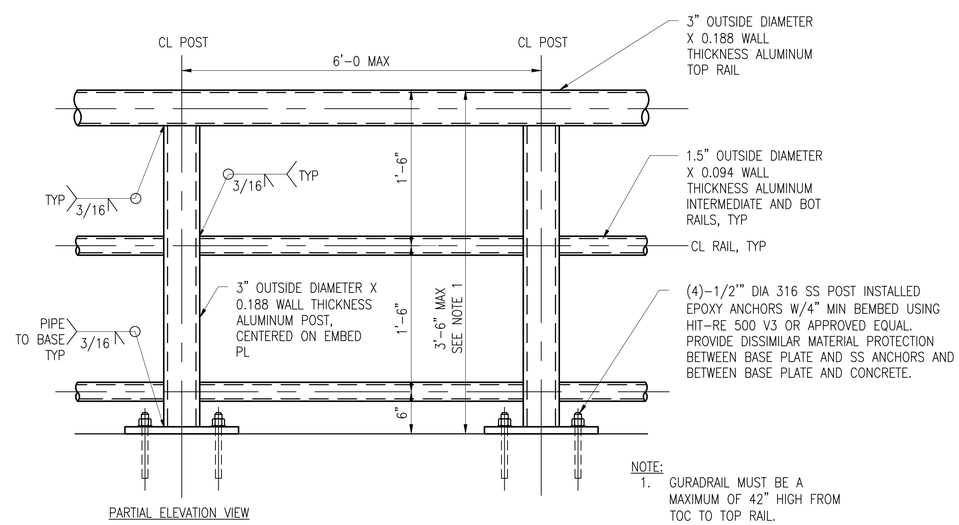

PARTIAL ELEVATION VIEW

NOTE:
1. GURADRAIL MUST BE A MAXIMUM OF 42" HIGH FROM TOC TO TOP RAIL.

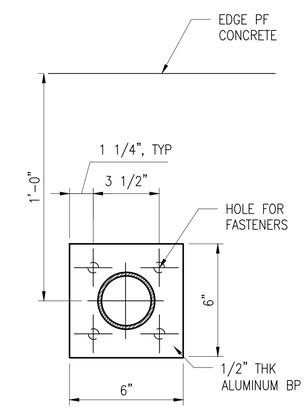

BASE PLATE FOR MOUNTING TO CONCRETE

A3 ALUMINUM GUARDRAIL DETAIL
SCALE: NONE

MARK	DESCRIPTION	DATE

NAVFAC

SEAL

A/E INFO

APPROVED
FOR COMMANDER NAVFAC

ACTIVITY
Approved by LCDR VINCE DEL GRECO, ROICC with PWD YORKTOWN, via Email.

SATISFACTORY TO DATE 03/26/2026

DES	VAA	DRW MTW	CHK CWJ
PM/DM	MME/WJW		
BRANCH MANAGER	DLB		
CHIEF ENG/ARCH	JWJ		
FIRE PROTECTION	HPN		

DEPARTMENT OF THE NAVY
NAVAL FACILITIES ENGINEERING SYSTEMS COMMAND
MIDLANT PDC CORE
NAVAL FACILITIES ENGINEERING SYSTEMS COMMAND
NAVAL STATION NORFOLK, VIRGINIA
NAVAL WEAPONS STATION
YORKTOWN, VIRGINIA
P-171 WEAPONS MAGAZINES
STANDARD DETAILS

SCALE: AS SHOWN
EPROJECT NO.: 1737010
CONSTR. CONTR. NO. ##
NAVFAC DRAWING NO. 12942007
SHEET 349 OF 499
S-515
DRAWFORM REVISION: 14 SEP 2023

DOOR SCHEDULE										
DOOR TYPE	SIZE			MATERIAL	FINISH	SIZE			HARDWARE	U_VALUE
	HEIGHT	WIDTH	THICKNESS			HEAD	JAMB	SILL		
B	15'-11" INT. 15'-9 1/4" EXT.	37'-0"	0'-9"	STEEL	PAINT				2	PER FACILITY DESIGN STANDARD
A	6'-8"	6'-0"	0'-1 3/4"	INSULATED HOLLOW METAL	PAINT				1	

NOTE: TYPE A DOOR SHALL BE A DOUBLE EGRESS DOOR – RHR (RIGHT HAND REVERSE).

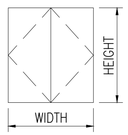

TYPE 'A'

TYPE 'B': SLIDING BLAST DOOR FOR OPENING SEE SHEET C1/ S-201

C1 DOOR LEGEND
SCALE: NONE

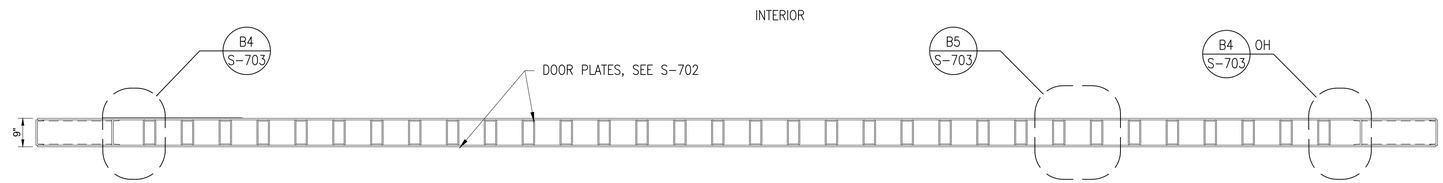

A2/S-701 C2 DOOR FRAMING SECTION
SCALE: 1/2" = 1'-0"

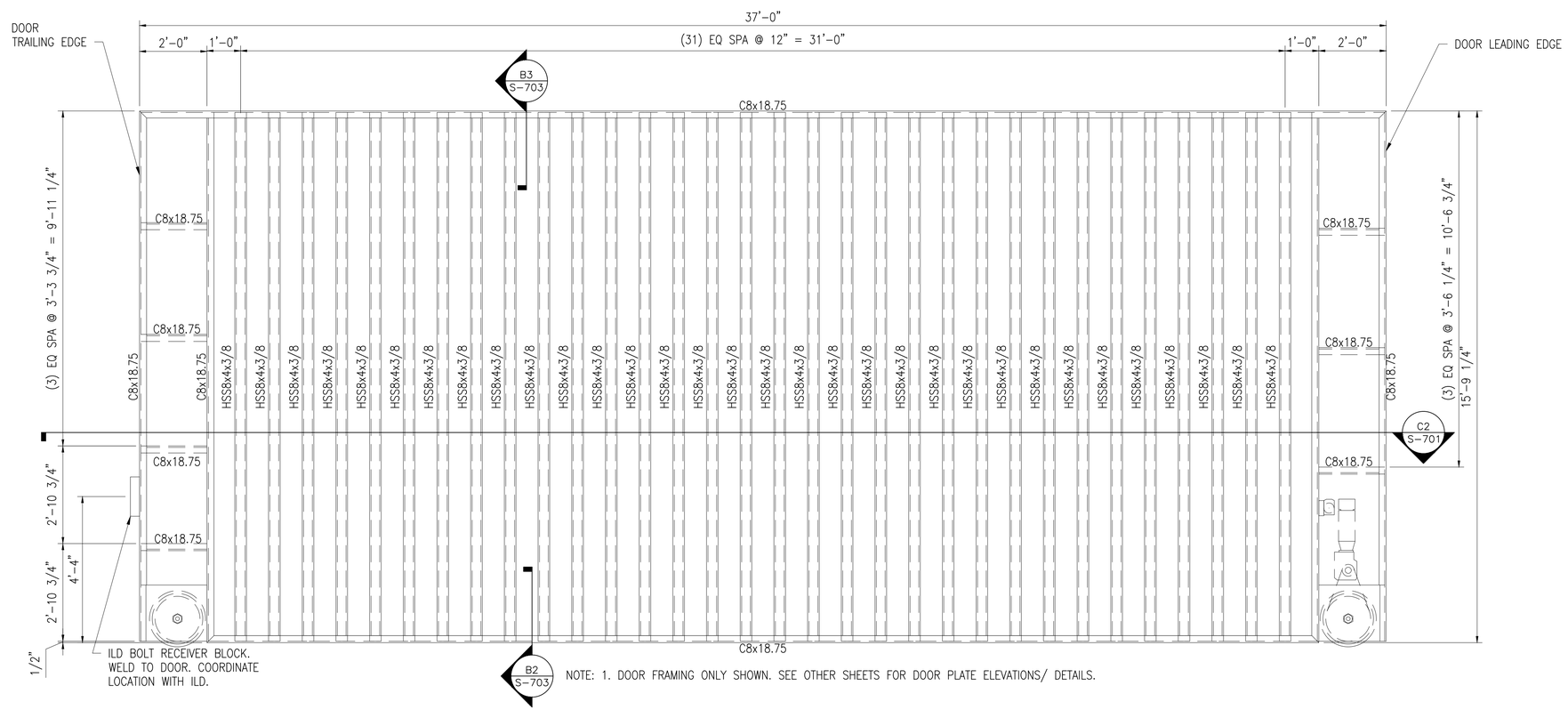

NOTE: 1. DOOR FRAMING ONLY SHOWN. SEE OTHER SHEETS FOR DOOR PLATE ELEVATIONS/ DETAILS.

A2 DOOR FRAMING ELEVATION
SCALE: 1/2" = 1'-0"

HW SET #1	
DOOR: TYPE A	
QTY	HARDWARE
6	HINGE (A5111) FULL MORTISE W/ MODIFIED NON-REMOVABLE PIN
1	EXIT DEVICE (FF-L-2890B) W/STRIKE PLATE #9
1	CYLINDER W/ EXTERNAL LEVER COMPATIBLE W/ EXIT DEVICE
1	ELECTRIC STRIKE (E09391)
1	ELECTRIC STRIKE (E09391)
2	KICK PLATE (J102)
2	OVERHEAD STOP (C01541)
1	REMOVABLE ASTRAGAL
1	THRESHOLD (J35100)
1	HEAD GASKET (R0Y164)
1	JAMB GASKET (R0Y164)
1	RAIN DRIP (R0Y976)
1	SWEEP (R0Y416)
1	BALANCE MAGNETIC SWITCH (UL 634 HSS)
~~1~~	~~INTERNAL LOCKING DEVICE (ILD)~~
1	INTRUSION DETECTION SYSTEM (IDS)

HW SET #2	
DOOR: TYPE B	
QTY	HARDWARE
1	INTERNAL LOCKING DEVICE (ILD)
1	INTRUSION DETECTION SYSTEM (IDS)
1	SWITCH (UL 634 HSS)
REFER TO DETAILS FOR SPECIFIC GASKETING AND FABRICATED ELEMENTS.	

GENERAL NOTES:

1. ALL FINISHES, BHMA 630; 626.
2. LOCKSETS AND LATCHES MUST COMPLY WITH (ANSI/ BHMA A156.13, SERIES 1000, OPERATIONAL GRADE 1, SECURITY GRADE (L) (2) (AND) (ANSI/ BHMA A156.2, SERIES 4000, GRADE L).
3. COORDINATE ALL HARDWARE SECURITY REQUIREMENTS WITH THE SERVICE AND INSTALLATION SECURITY PERSONNEL.
4. ALL HIGH SECURITY ILDs ARE GFCI.

A1 DOOR HARDWARE SCHEDULE
SCALE: NONE

GRAPHIC SCALES
SCALE: 1/2" = 1'-0"
0 1' 2' 4'

MARK	DESCRIPTION	DATE

SEAL

A/E INFO

APPROVED
FOR COMMANDER NAVFAC

ACTIVITY
Approved by LCDR VINCE DEL GRECO, ROICC with PWD YORKTOWN, via Email.

SATISFACTORY TO DATE 03/26/2026

DES VAA | DRW MTW | CHK CWJ
PM/DM MME/WJW
BRANCH MANAGER DLB
CHIEF ENG/ARCH JWJ
FIRE PROTECTION HPN

DEPARTMENT OF THE NAVY
NAVAL FACILITIES ENGINEERING SYSTEMS COMMAND
MIDLANT PDC CORE
NAVAL FACILITIES ENGINEERING SYSTEMS COMMAND
NAVAL STATION NORFOLK, VIRGINIA
NAVAL WEAPONS STATION
YORKTOWN, VIRGINIA
P-171 WEAPONS MAGAZINES
DOOR ELEVATION, NOTES AND SCHEDULES

SCALE: AS SHOWN
EPROJECT NO.: 1737010
CONSTR. CONTR. NO. ##
NAVFAC DRAWING NO. 12942008
SHEET 350 OF 499
S-701

DRAWFORM REVISION: 14 SEP 2023

NOTE:

1. DIMENSIONS NOTED WITH AN (*) MUST BE COORDINATED BY THE DOOR MANUFACTURER ENSURING THAT THE DOOR SYSTEMS AND COMPONENTS PERFORM PER BLAST DOOR NOTES ON SHEET S-003 AND ENSURING ALL MECHANICAL COMPONENTS FIT WITHIN THE DOOR.

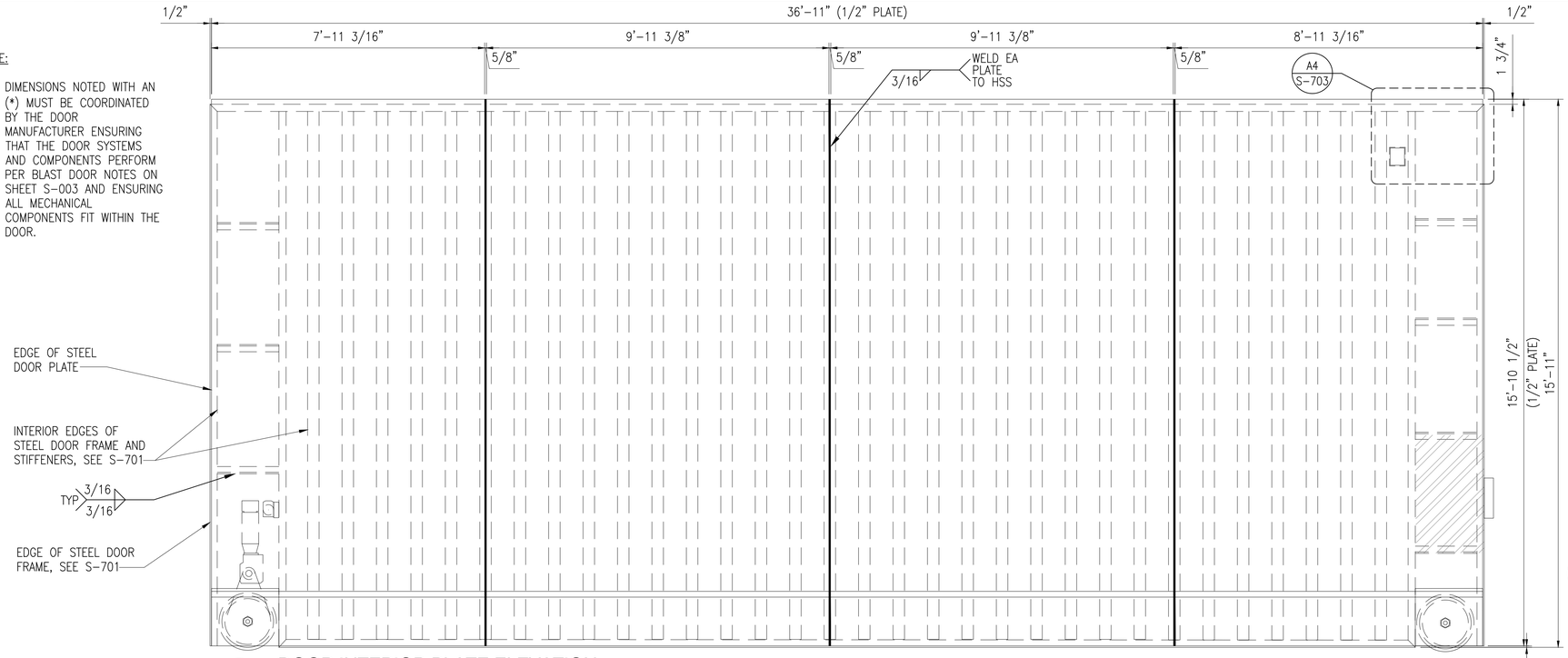

C1 DOOR INTERIOR PLATE ELEVATION

SCALE: 1/2" = 1'-0"

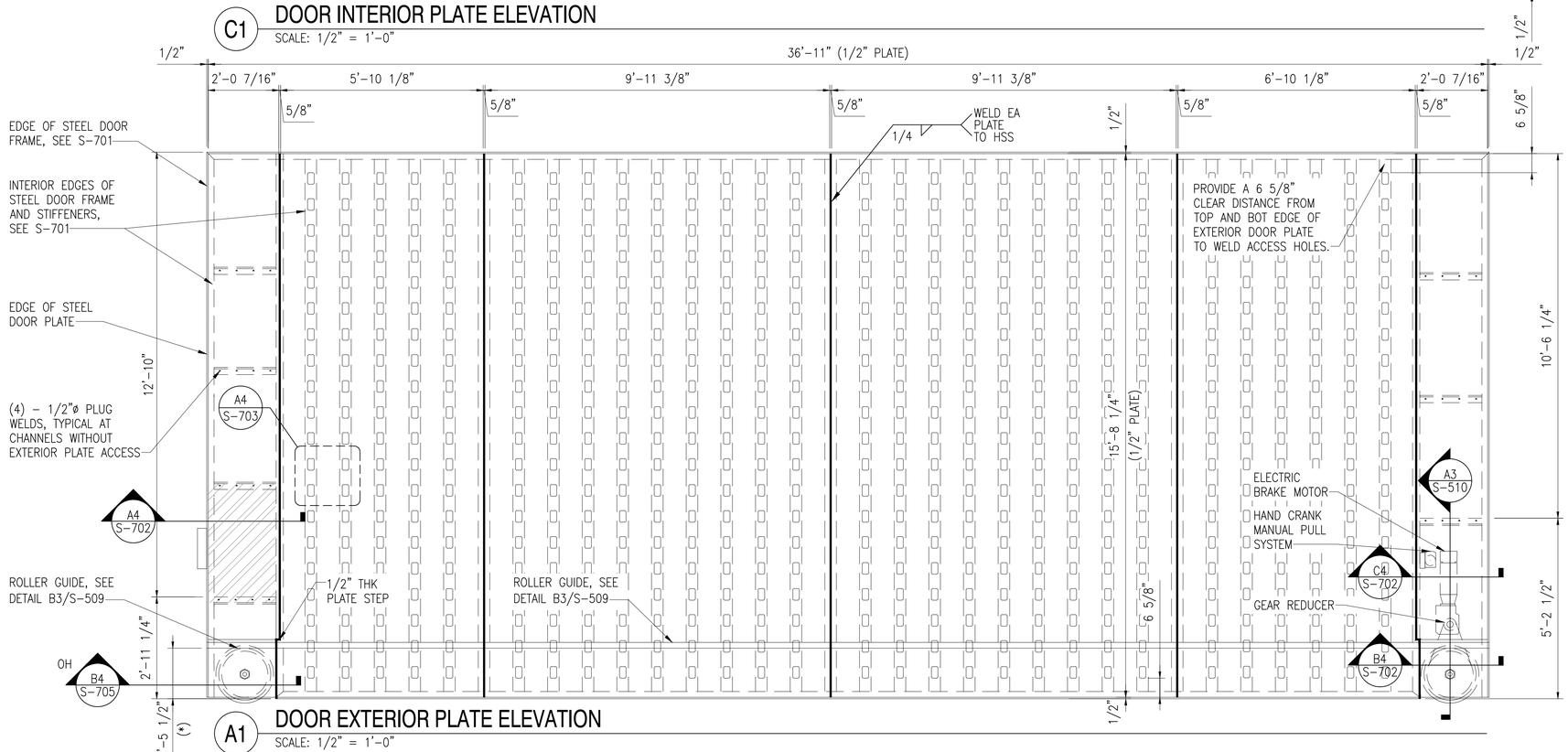

A1 DOOR EXTERIOR PLATE ELEVATION

SCALE: 1/2" = 1'-0"

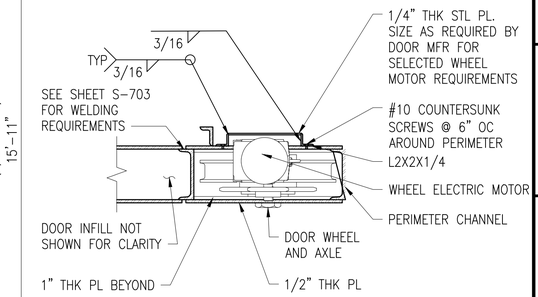

C4 DETAIL - DOOR WHEEL AND WHEEL MOTOR

SCALE: 1" = 1'-0"

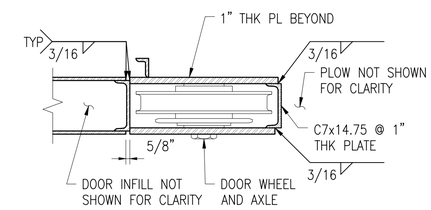

B4 DETAIL - DOOR WHEEL

SCALE: 1" = 1'-0"

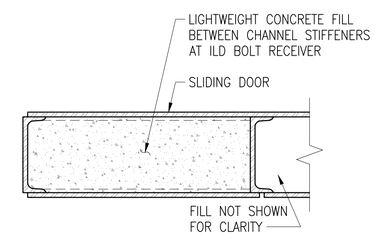

A4 DETAIL - ILD BOLT RECEIVER DOOR FILL

SCALE: 1 1/2" = 1'-0"

NOTE:
1. SEE SHEET S-703 FOR WELDING REQUIREMENTS.

GRAPHIC SCALES

SCALE: 1/2" = 1'-0" (0, 1', 2', 4')

SCALE: 1" = 1'-0" (0, 6", 1', 2')

SCALE: 1 1/2" = 1'-0" (0, 6", 1', 2')

MARK	DESCRIPTION	DATE

NAVFAC

SEAL

A/E INFO

APPROVED
John J. Gibbons, P.E.
FOR COMMANDER NAVFAC

ACTIVITY
Approved by LCDR VINCE DEL GRECO, ROICC with PWD YORKTOWN, via Email.

SATISFACTORY TO DATE 03/26/2026

DES	VAA	DRW MTW	CHK CWJ
PM/DM	MME/WJW		
BRANCH MANAGER	DLB		
CHIEF ENG/ARCH	JWJ		
FIRE PROTECTION	HPN		

DEPARTMENT OF THE NAVY
NAVAL FACILITIES ENGINEERING SYSTEMS COMMAND
MIDLANT PDC CORE

NAVAL FACILITIES ENGINEERING SYSTEMS COMMAND
NAVAL STATION NORFOLK, VIRGINIA

NAVAL WEAPONS STATION
YORKTOWN, VIRGINIA

P-171 WEAPONS MAGAZINES

DOOR ELEVATION AND DETAILS

SCALE: AS SHOWN
EPROJECT NO.: 1737010
CONSTR. CONTR. NO.: ##
NAVFAC DRAWING NO.: 12942009
SHEET 351 OF 499

S-702

DRAWFORM REVISION: 14 SEP 2023

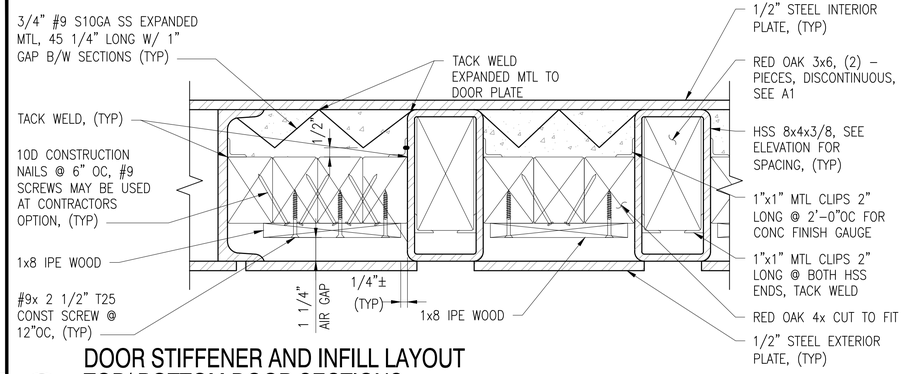

C1 DOOR STIFFENER AND INFILL LAYOUT TOP/ BOTTOM DOOR SECTIONS

SCALE: 3" = 1'-0"

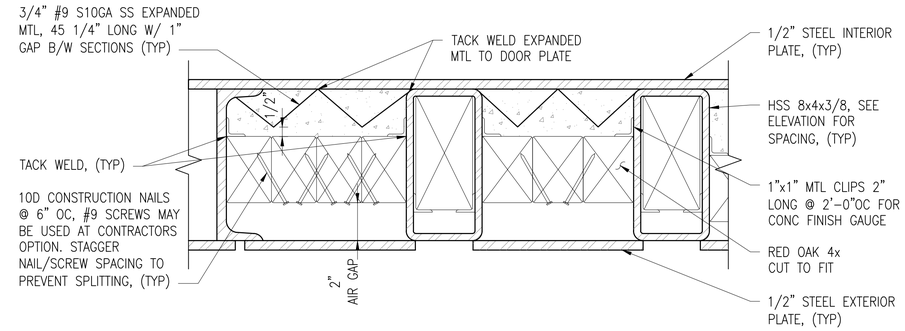

C3 DOOR STIFFENER AND FILL LAYOUT - MIDDLE DOOR SECTION

SCALE: 3" = 1'-0"

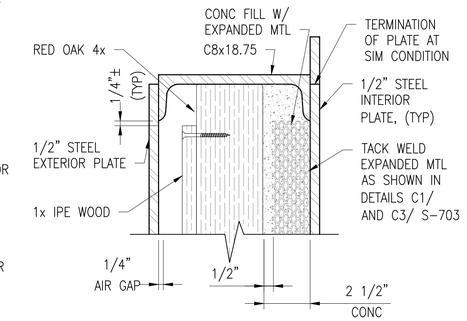

C5 DOOR TOP LAYOUT

SCALE: 3" = 1'-0"

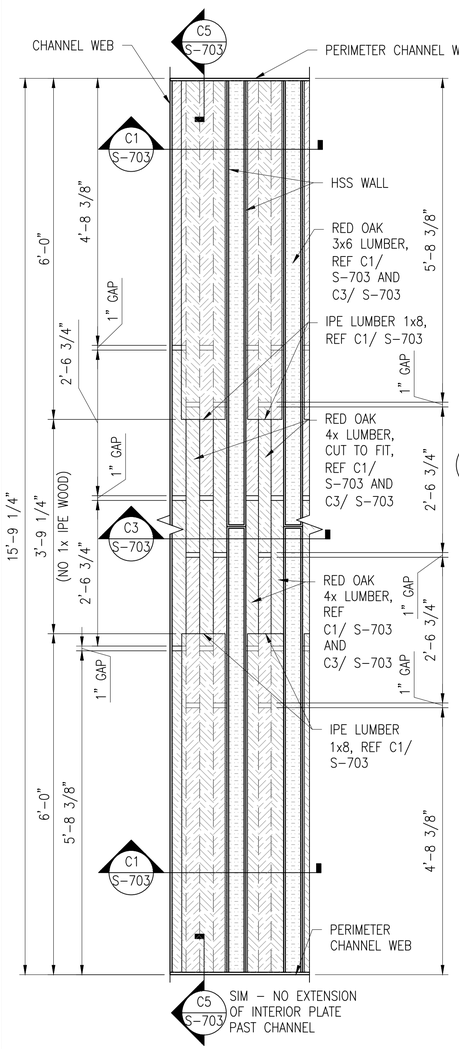

SHEET NOTES:

1. CONCRETE FILLED DOORS REQUIRE WHEELS OFFSET NOMINAL TOWARD THE INTERIOR SIDE OF THE DOOR. DOOR MANUFACTURER MUST VERIFY CENTER OF GRAVITY OF DOOR PRIOR TO FINAL CONSTRUCTION.
2. EXPANDED METAL REINFORCEMENT SHOWN IN THE CONCRETE FILL LAYER INSIDE THE DOOR IN DETAILS C1 AND C3 OF THIS SHEET MUST BE PLACED IN (4) DIFFERENT PIECES OF METAL WITH EQUAL LENGTHS AND PLACED IN THE CONCRETE FILL TO BE DISCONTINUOUS WITHOUT ATTACHING OR LAPPING THE DIFFERENT SEGMENTS TOGETHER. PROVIDE 1" GAP BETWEEN ADJACENT SECTIONS OF EXPANDED METAL REINFORCEMENT, AS INDICATED IN THE DETAILS.

A1 ELEVATION - TYPICAL CONFIGURATION OF DOOR INFILL

SCALE: 3/4" = 1'-0"

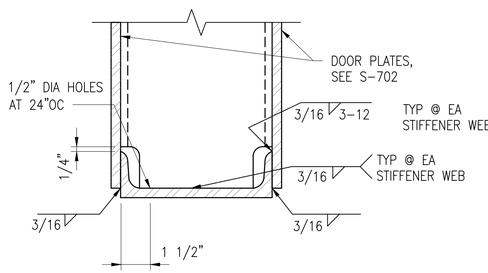

NOTE: DOOR INFILL NOT SHOWN FOR CLARITY.

B2 DETAIL AT BOTTOM OF DOOR

SCALE: 3" = 1'-0"

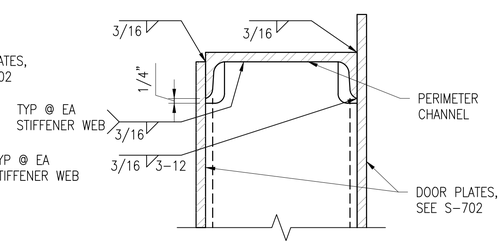

NOTE: DOOR INFILL NOT SHOWN FOR CLARITY.

B3 DETAIL AT TOP OF DOOR

SCALE: 3" = 1'-0"

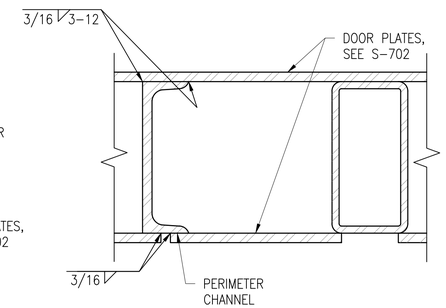

NOTE: DOOR INFILL NOT SHOWN FOR CLARITY

B4 WELD DETAIL AT DOOR EDGE

SCALE: 3" = 1'-0"

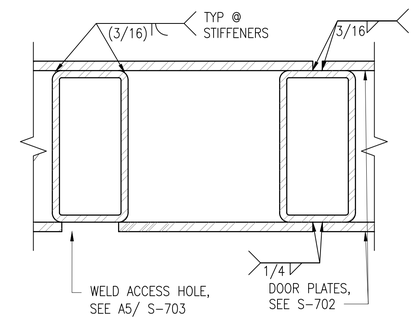

NOTE: DOOR INFILL NOT SHOWN FOR CLARITY

B5 WELD DETAIL AT INTERIOR STIFFENERS

SCALE: 3" = 1'-0"

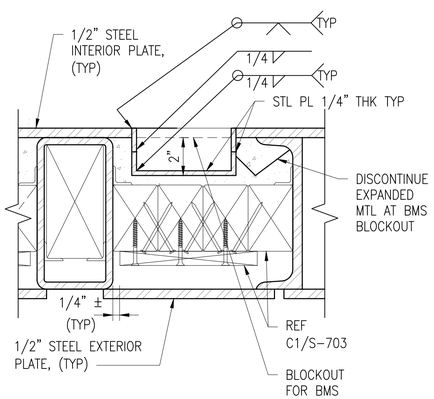

A3 BMS BLOCKOUT DETAIL

SCALE: 3" = 1'-0"

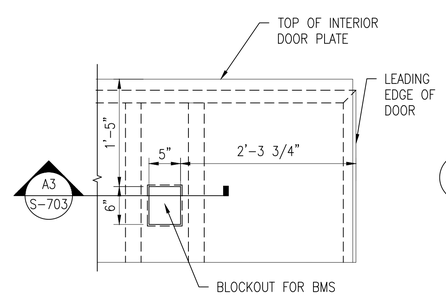

A4 BMS BLOCKOUT LOCATION

SCALE: 1" = 1'-0"

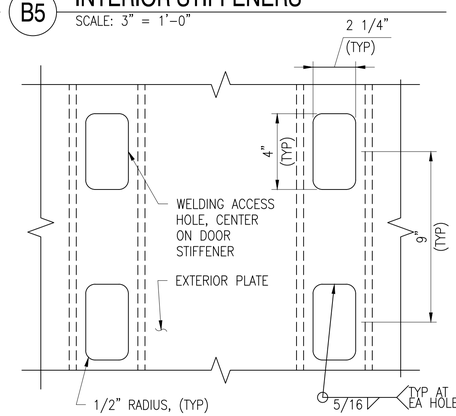

A5 EXTERIOR PLATE TO HSS STIFFENER CONNECTION

SCALE: 3" = 1'-0"

GRAPHIC SCALES

SCALE: 3/4" = 1'-0" (0, 1', 2', 4')

SCALE: 1" = 1'-0" (0, 6", 1', 2')

SCALE: 3" = 1'-0" (0, 3", 6", 1')

MARK	DESCRIPTION	DATE

NAVFAC

SEAL

A/E INFO

APPROVED

FOR COMMANDER NAVFAC

ACTIVITY: Approved by LCDR VINCE DEL GRECO, ROICC with PWD YORKTOWN, via Email.

SATISFACTORY TO DATE 03/26/2026

DES VAA | DRW MTW | CHK CWJ

PM/DM MME/WJW

BRANCH MANAGER DLB

CHIEF ENG/ARCH JWJ

FIRE PROTECTION HPN

DEPARTMENT OF THE NAVY
NAVAL FACILITIES ENGINEERING SYSTEMS COMMAND
MIDLANT PDC CORE
NAVAL FACILITIES ENGINEERING SYSTEMS COMMAND
NAVAL STATION NORFOLK, VIRGINIA
NAVAL WEAPONS STATION
YORKTOWN, VIRGINIA
P-171 WEAPONS MAGAZINES
DOOR DETAILS

SCALE: AS SHOWN

EPROJECT NO.: 1737010

CONSTR. CONTR. NO. ##

NAVFAC DRAWING NO. 12942010

SHEET 352 OF 499

S-703

DRAWFORM REVISION: 14 SEP 2023

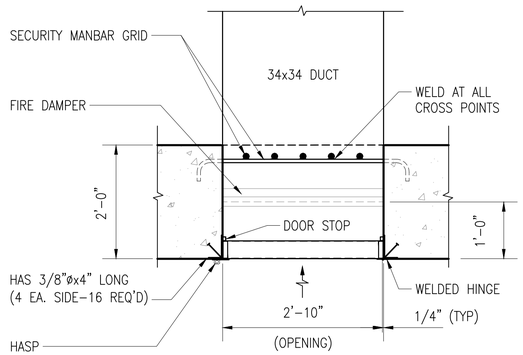

C2 SECTION
SCALE: 3/4" = 1'-0"

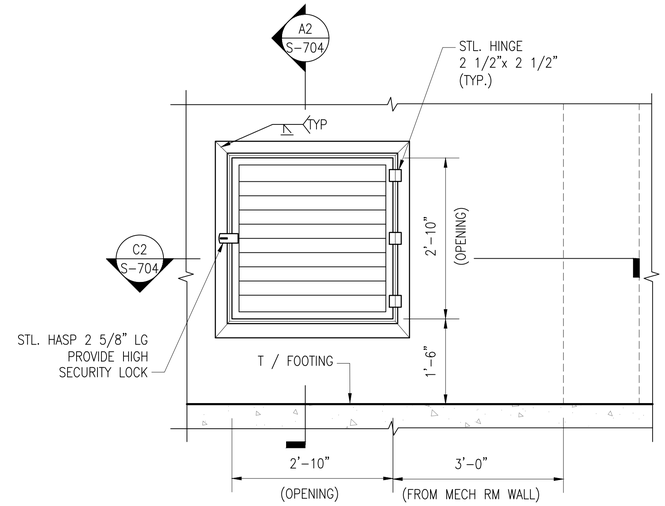

C4 SECTION
SCALE: 3/4" = 1'-0"

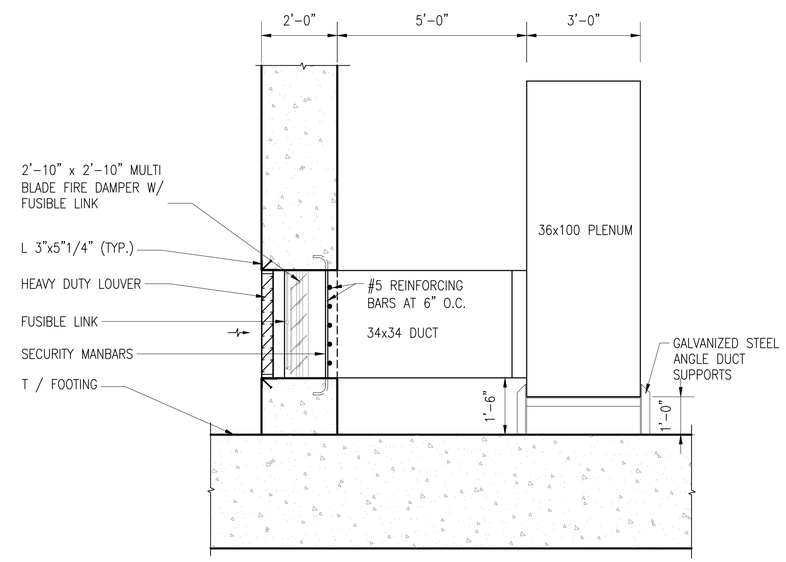

A2 SECTION
SCALE: 1/2" = 1'-0"

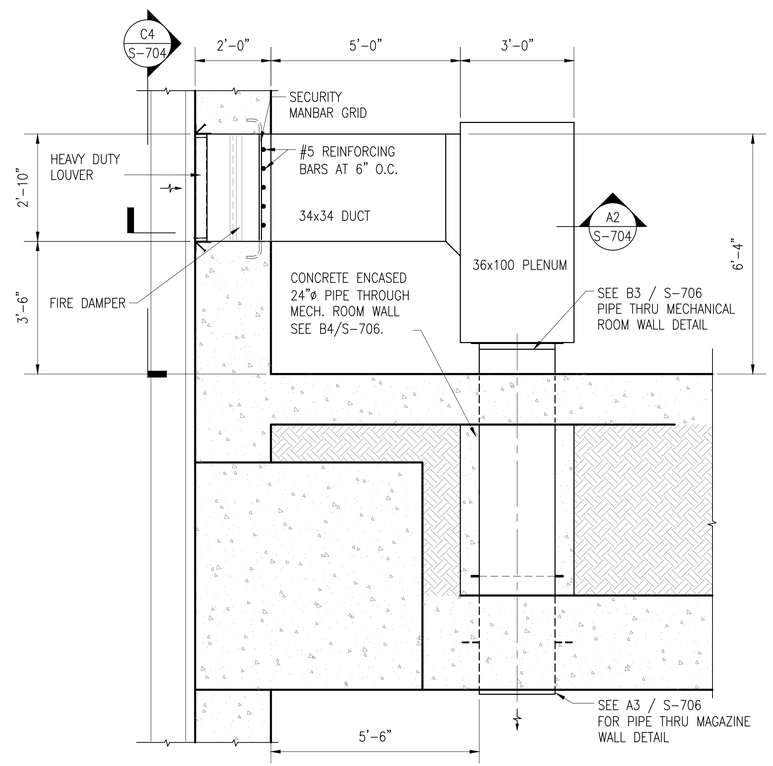

A4 AIR INTAKE DETAIL
SCALE: 1/2" = 1'-0"

GRAPHIC SCALES
SCALE: 1/2" = 1'-0" 0 1' 2' 4'

SCALE: 3/4" = 1'-0" 0 1' 2' 4'

MARK	DESCRIPTION	DATE

NAVFAC

SEAL

A/E INFO

APPROVED
DATE: 03/26/2026 12:00 PM
FOR COMMANDER NAVFAC

ACTIVITY
Approved by LCDR VINCE DEL GRECO, ROICC with PWD YORKTOWN, via Email.
SATISFACTORY TO DATE 03/26/2026

DES VAA	DRW MTW	CHK CWJ	
PM/DM	MME/WJW		
BRANCH MANAGER	DLB		
CHIEF ENG/ARCH	JWJ		
FIRE PROTECTION	HPN		

DEPARTMENT OF THE NAVY
NAVAL FACILITIES ENGINEERING SYSTEMS COMMAND
MIDLANT PDC CORE

NAVAL FACILITIES ENGINEERING SYSTEMS COMMAND
NAVAL STATION NORFOLK, VIRGINIA

NAVAL WEAPONS STATION
YORKTOWN, VIRGINIA

P-171 WEAPONS MAGAZINES

AIR INTAKE SECTIONS AND DETAILS

SCALE: AS SHOWN
EPROJECT NO.: 1737010
CONSTR. CONTR. NO. ##
NAVFAC DRAWING NO. 12942011
SHEET 353 OF 499

S-704

DRAWFORM REVISION: 14 SEP 2023

NOTES:

1. ALL DAMPER AND SHAFT ASSEMBLIES MUST OPERATE FREELY AND POSITIVELY.
2. FUSIBLE LINKS MUST HAVE MELTING POINT OF 160° TO 165° F. BREAKING STRENGTH MUST BE SUITABLE FOR LOADS IMPOSED BY COUNTERWEIGHTS.
3. ALL SET SCREWS & MACHINE SCREWS MUST BE STAINLESS STEEL.
4. VENTILATOR MUST BE DESIGNED FOR A SUSTAINED WIND SPEED OF 132 M.P.H.
5. REFER TO ELECTRICAL DRAWINGS FOR AIR TERMINAL LOCATION ON VENTILATOR. REF: C1/E-504.
6. ALL MOVING PARTS MUST BE NON-SPARKING TYPE.
7. GRAVITY VENTILATOR MUST BE INTRINSICALLY SAFE.
8. BOND VENTILATOR TO GROUNDING SYSTEM. SEE ELECTRICAL DRAWINGS REQUIREMENTS.
9. CAP TOP OF SHAFT WITH GALVANIZED SHEET METAL WITH 2" RIGID BOARD INSULATION IN LIEU OF PROVIDING VENTILATOR WHERE A MECHANICAL HEATING AND /OR COOLING SYSTEM IS REQUIRED.
10. ALL COMPONENTS ON THIS SHEET INDICATED TO BE "SS" MUST BE TYPE 304 (NON-PASSIVATED) STAINLESS STEEL.

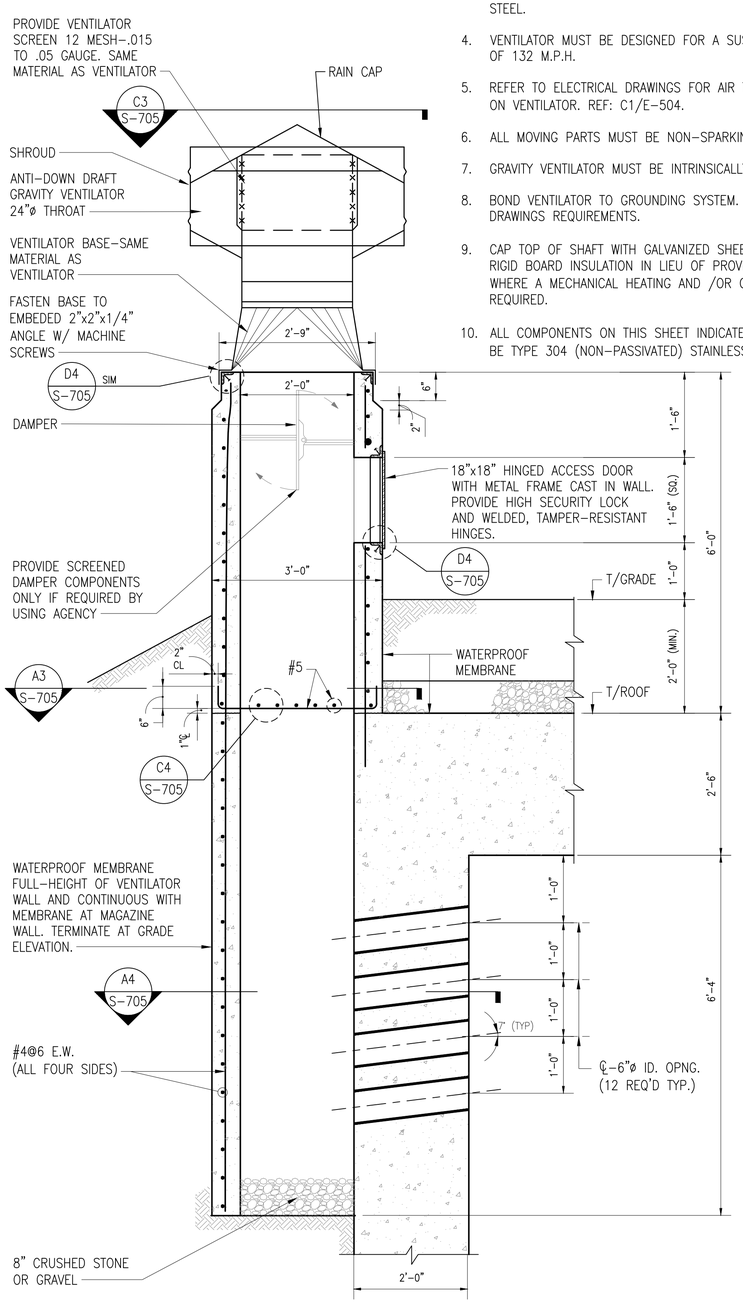

A1 SECTION

SCALE: 3/4" = 1'-0"

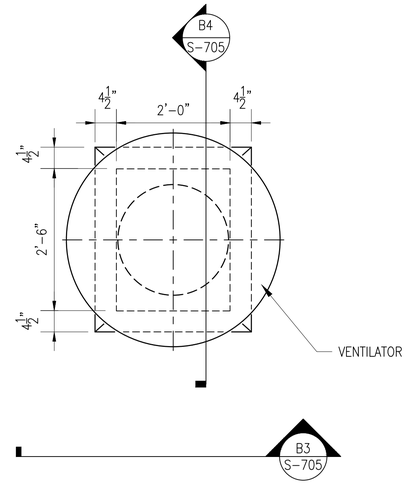

C3 DETAIL AT VENTILATOR

SCALE: 3/4" = 1'-0"

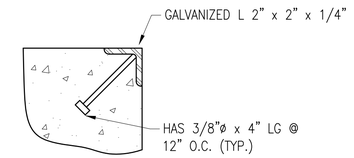

D4 DETAIL

SCALE: 3" = 1'-0"

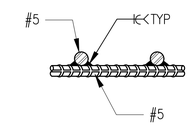

C4 DETAIL

SCALE: 3" = 1'-0"

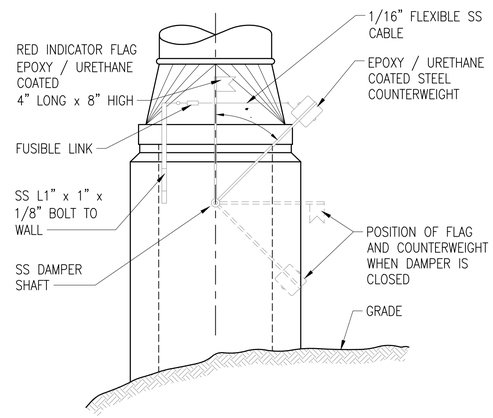

B3 ELEVATION AT VENTILATOR

SCALE: 3/4" = 1'-0"

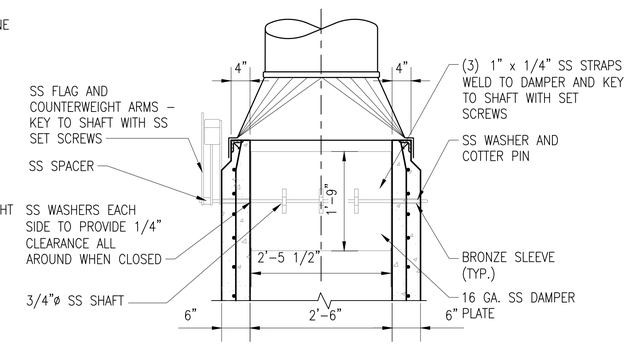

B4 SECTION AT VENTILATOR

SCALE: 3/4" = 1'-0"

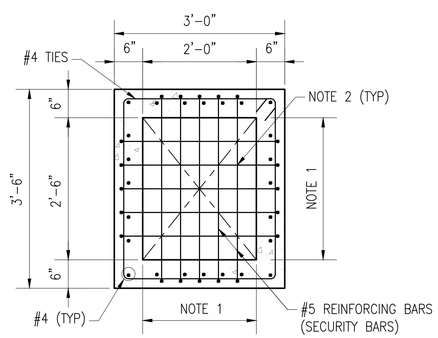

NOTES:

1. 6 EVEN SPACES EACH WAY FOR GRID PATTERN.
2. WELD AT ALL CROSS POINTS.

A3 SECTION AT VENTILATOR

SCALE: 3/4" = 1'-0"

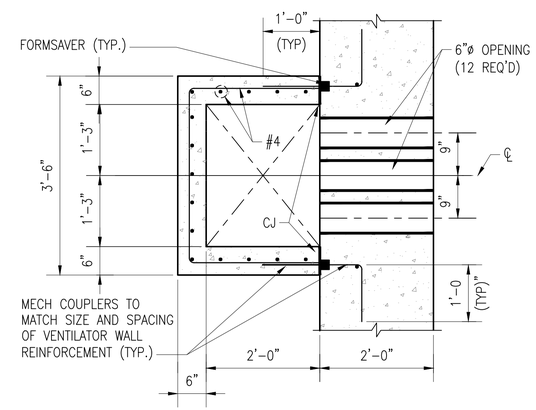

A4 SECTION AT VENTILATOR

SCALE: 3/4" = 1'-0"

GRAPHIC SCALES

0 1' 2' 4'

0 3" 6" 1'

MARK	DESCRIPTION	DATE

SEAL

A/E INFO

APPROVED

FOR COMMANDER NAVFAC

ACTIVITY: Approved by LCDR VINCE DEL GRECO, ROICC with PWD YORKTOWN, via Email.

SATISFACTORY TO DATE 03/26/2026

DES VAA | DRW MTW | CHK CWJ

PM/DM MME/WJW

BRANCH MANAGER DLB

CHIEF ENG/ARCH JWJ

FIRE PROTECTION HPN

DEPARTMENT OF THE NAVY
NAVAL FACILITIES ENGINEERING SYSTEMS COMMAND
MIDLANT PDC CORE

NAVAL FACILITIES ENGINEERING SYSTEMS COMMAND
NAVAL STATION NORFOLK, VIRGINIA

NAVAL WEAPONS STATION
YORKTOWN, VIRGINIA

P-171 WEAPONS MAGAZINES

VENTILATOR DETAILS, SECTIONS AND ELEVATIONS

SCALE: AS SHOWN

EPROJECT NO.: 1737010

CONSTR. CONTR. NO. ##

NAVFAC DRAWING NO. 12942012

SHEET 354 OF 499

S-705

DRAWFORM REVISION: 14 SEP 2023

FILE NAME: K:\VA\Yorktown\MILCON\2024_1737010_P171_Weapons_Magazines\B_Design\DWGS - MAGAZINE\Sheet\07_STRUCTS-705 VENTILATOR DETAILS SECTIONS AND ELEVATIONS.dwg LAYOUT NAME: VENTILATOR DETAILS SECTIONS AND ELEVATIONS PLOTTED: Tuesday, March 31, 2026 - 1:52pm USER: miguel.walker

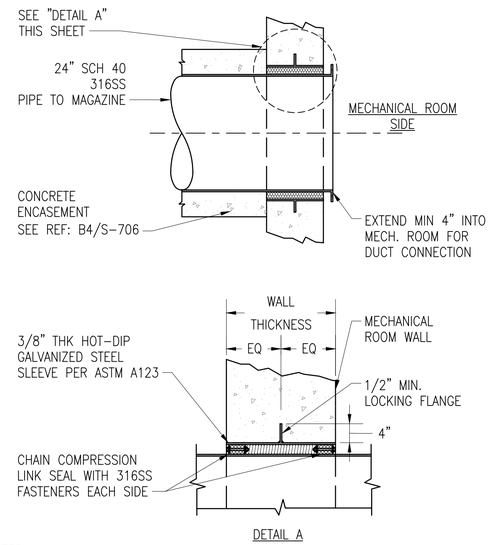

NOTES:

1. ADJUST DESIGN TO INCORPORATE OUT-OF-WALL FIRE DAMPERS IF REQUIRED.
2. OUTER STEEL SLEEVE SIZE TO BE COORDINATED WITH CHAIN COMPRESSION LINK SEAL REQUIREMENTS.
3. INSTALL CONNECTING DUCTWORK AND FITTINGS IN ACCORDANCE WITH DUCTWORK MANUFACTURER'S RECOMMENDATIONS.
4. FILL VOID BETWEEN LINK SEALS WITH MINERAL WOOL.
5. PIPE FLANGES MUST BE WELD NECK TYPE, CONFORMING TO ASME B16.5.

B3 PIPE THRU MECHANICAL ROOM WALL DETAIL

SCALE: NO SCALE

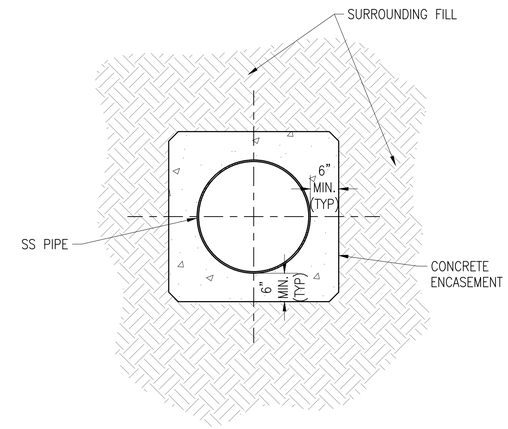

NOTES:

1. DUCTWORK INSTALLED UNDERGROUND MUST BE 24" DIAMETER SCH 40 304SS PIPE.
2. TRENCHES MUST BE PITCHED TO PREVENT THE BUILDUP OF WATER AROUND THE PIPE OR WALL PENETRATIONS.
3. PIPE MUST BE TIED DOWN TO AVOID FLOATING DURING POURING OF CONCRETE ENCASEMENT.
4. CONCRETE MUST NOT BE POURED DIRECTLY ONTO THE PIPE. IT MUST BE POURED IN SUCCESSIVE LAYERS AND TAMPED FIRMLY AROUND THE PIPE.
5. FIELD APPLY BITUMEN COATING TO PIPE PRIOR TO CONCRETE ENCASEMENT.
6. CONCRETE ENCASEMENT TO BE MINIMUM OF 6" THICK.
7. WRAP CONCRETE ENCASED DUCTS IN WATERPROOFING MEMBRANE AND SEAL AGAINST ADJACENT MEMBRANE AT STRUCTURAL PENETRATION POINTS.

B4 CONCRETE ENCASED PIPE DETAIL

SCALE: 3/4" = 1'-0"

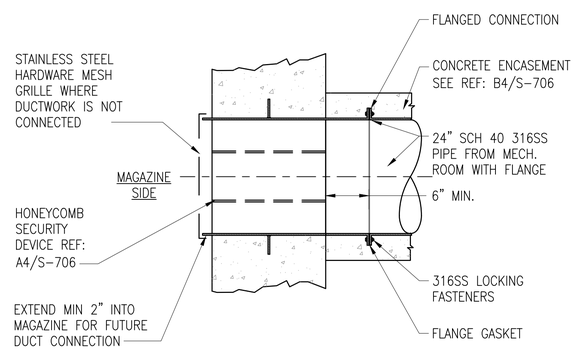

NOTES:

1. PIPE FLANGES MUST BE WELD NECK TYPE, CONFORMING TO ASME B16.5

A3 PIPE THRU MAGAZINE WALL DETAIL

SCALE: 3/4" = 1'-0"

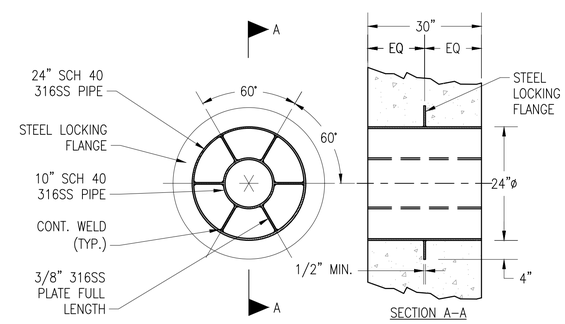

NOTES:

1. ASSEMBLY MUST BE FULLY WELDED 316SS.
2. INDIVIDUAL OPENINGS MUST NOT EXCEED 96 SQ. IN. FREE AREA.
3. INNER PIPE MUST BE CENTERED IN OUTER PIPE.
4. FIELD APPLY BITUMEN COATING TO OUTSIDE OF PIPE PRIOR TO CONCRETE ENCASEMENT.

A4 HONEYCOMB SECURITY DEVICE DETAIL

SCALE: 3/4" = 1'-0"

GRAPHIC SCALES

SCALE: 3/4" = 1'-0" 0 1' 2' 4'

MARK	DESCRIPTION	DATE

SEAL

A/E INFO

APPROVED

FOR COMMANDER NAVFAC

ACTIVITY
Approved by LCDR VINCE DEL GRECO, ROICC with PWD YORKTOWN, via Email.

SATISFACTORY TO DATE 03/26/2026

DES VAA	DRW MTW	CHK CWJ	
PM/DM	MME/WJW		
BRANCH MANAGER	DLB		
CHIEF ENG/ARCH	JWJ		
FIRE PROTECTION	HPN		

DEPARTMENT OF THE NAVY
NAVAL FACILITIES ENGINEERING SYSTEMS COMMAND
MIDLANT PDC CORE

NAVAL FACILITIES ENGINEERING SYSTEMS COMMAND
NAVAL STATION NORFOLK, VIRGINIA

NAVAL WEAPONS STATION
YORKTOWN, VIRGINIA

P-171 WEAPONS MAGAZINES

VAULT PENETRATION DETAILS

SCALE: AS SHOWN

EPROJECT NO.: 1737010

CONSTR. CONTR. NO. ##

NAVFAC DRAWING NO. 12942013

SHEET 355 OF 499

S-706

DRAWFORM REVISION: 14 SEP 2023

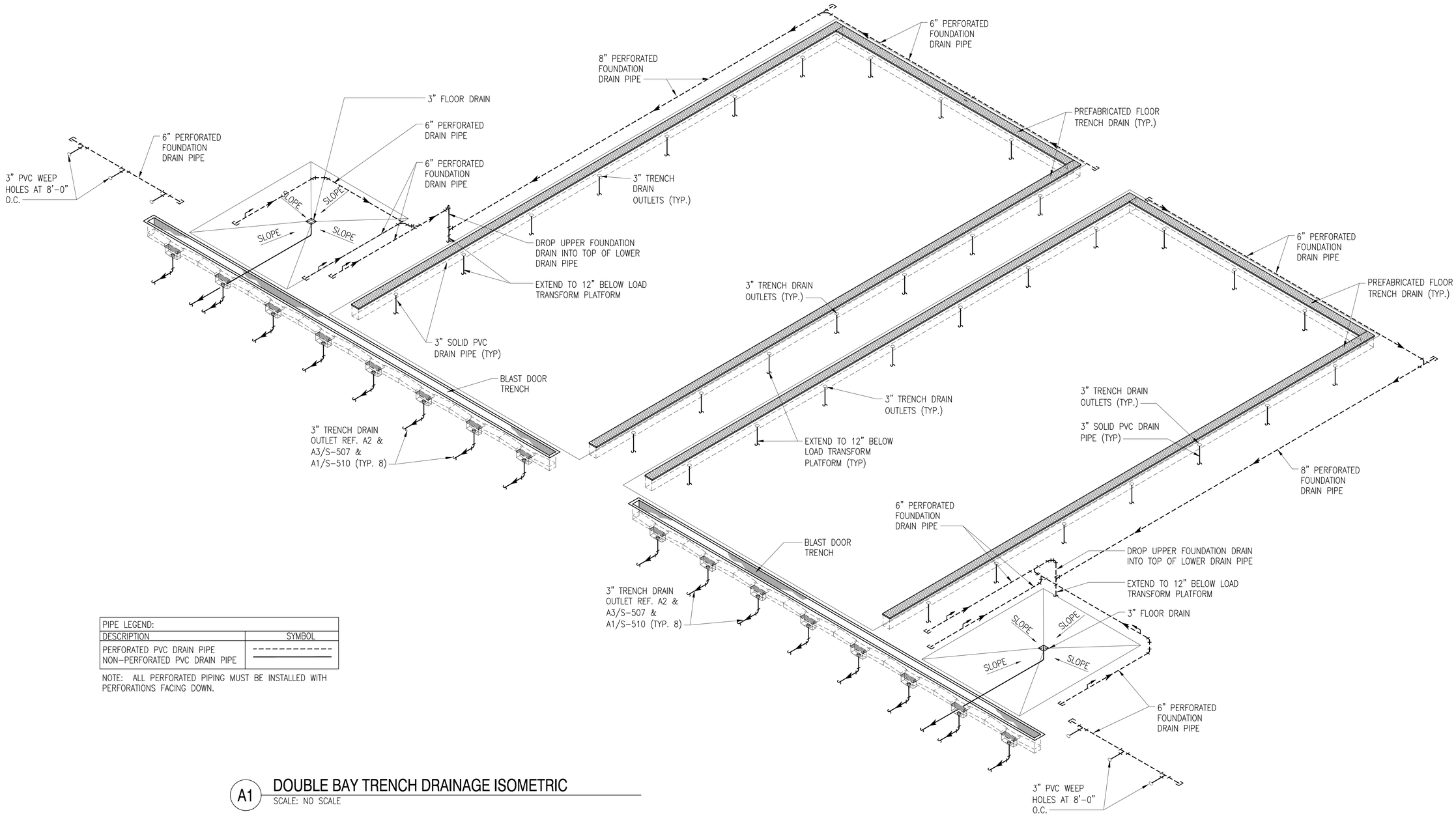

PIPE LEGEND:	
DESCRIPTION	SYMBOL
PERFORATED PVC DRAIN PIPE	- - - - - - - - - - - -
NON-PERFORATED PVC DRAIN PIPE	————————

NOTE: ALL PERFORATED PIPING MUST BE INSTALLED WITH PERFORATIONS FACING DOWN.

A1 DOUBLE BAY TRENCH DRAINAGE ISOMETRIC

SCALE: NO SCALE

MARK	DESCRIPTION	DATE

SEAL

A/E INFO

APPROVED
James E. Donahue, R.A.
FOR COMMANDER NAVFAC

ACTIVITY
Approved by LCDR VINCE DEL GRECO, ROICC with PWD YORKTOWN, via Email.

SATISFACTORY TO DATE	03/26/2026
DES VAA / DRW MTW / CHK CWJ	
PM/DM	MME/WJW
BRANCH MANAGER	DLB
CHIEF ENG/ARCH	JWJ
FIRE PROTECTION	HPN

DEPARTMENT OF THE NAVY
NAVAL FACILITIES ENGINEERING SYSTEMS COMMAND
MIDLANT PDC CORE

NAVAL FACILITIES ENGINEERING SYSTEMS COMMAND
NAVAL STATION NORFOLK, VIRGINIA

NAVAL WEAPONS STATION
YORKTOWN, VIRGINIA

P-171 WEAPONS MAGAZINES

DOUBLE BAY TRENCH DRAINAGE ISOMETRIC

SCALE:	AS SHOWN
EPROJECT NO.:	1737010
CONSTR. CONTR. NO.	##
NAVFAC DRAWING NO.	12942014
SHEET	356 OF 499

S-707

DRAWFORM REVISION: 14 SEP 2023

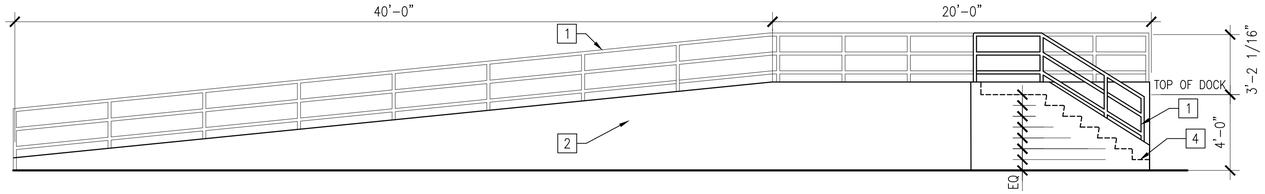

RAMP ELEVATION

SCALE: 1/4" = 1'-0" D1

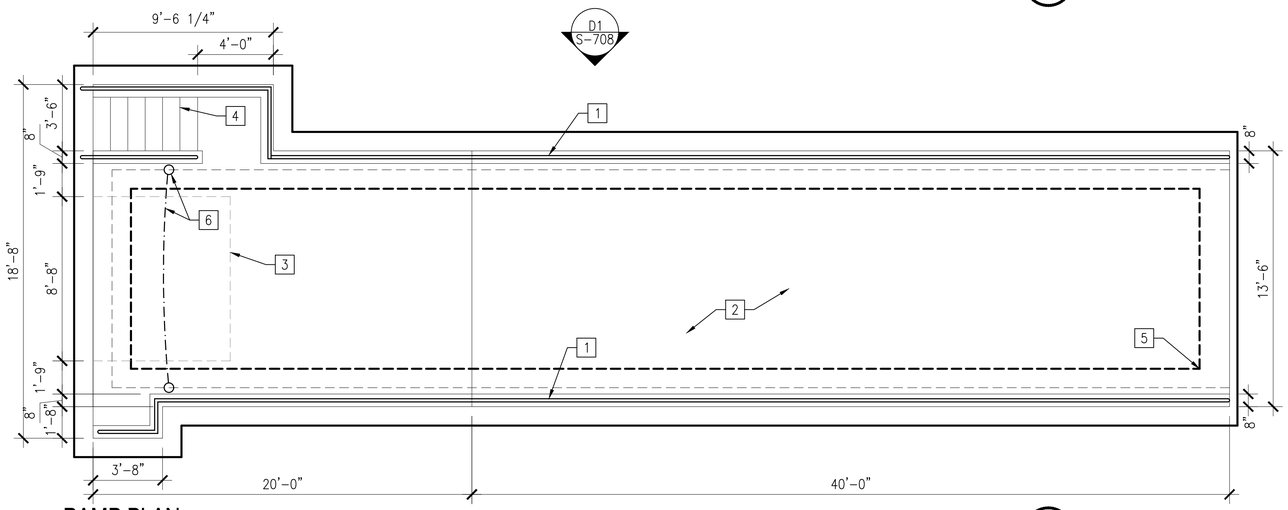

RAMP PLAN

SCALE: 1/4" = 1'-0" B1

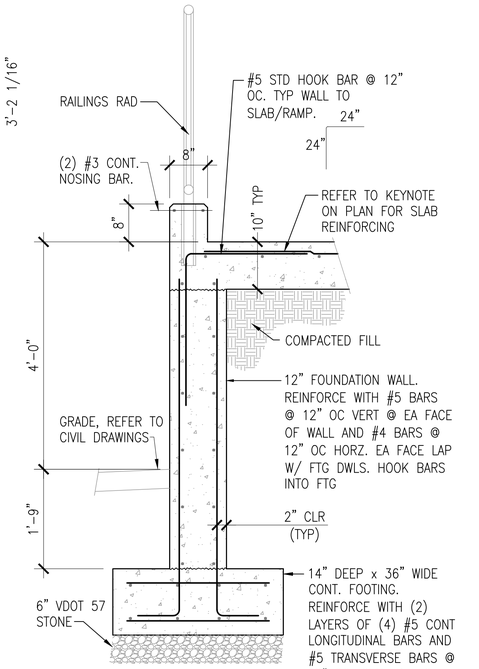

EDGE OF RAMP DETAIL

SCALE: 3/4" = 1'-0" S-708 C3

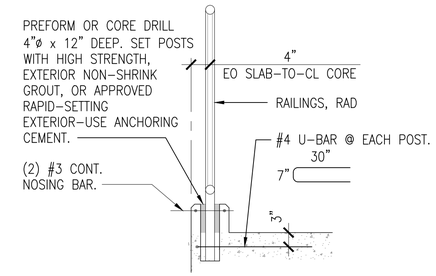

TYP DTL AT RAILING

SCALE: 3/4" = 1'-0" S-708 D4

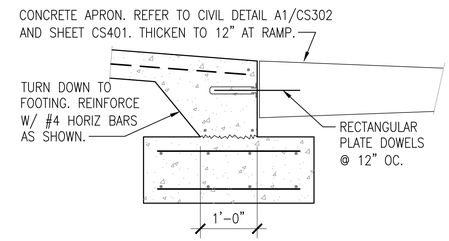

DETAIL AT RAMP BOTTOM

SCALE: 3/4" = 1'-0" S-708 C4

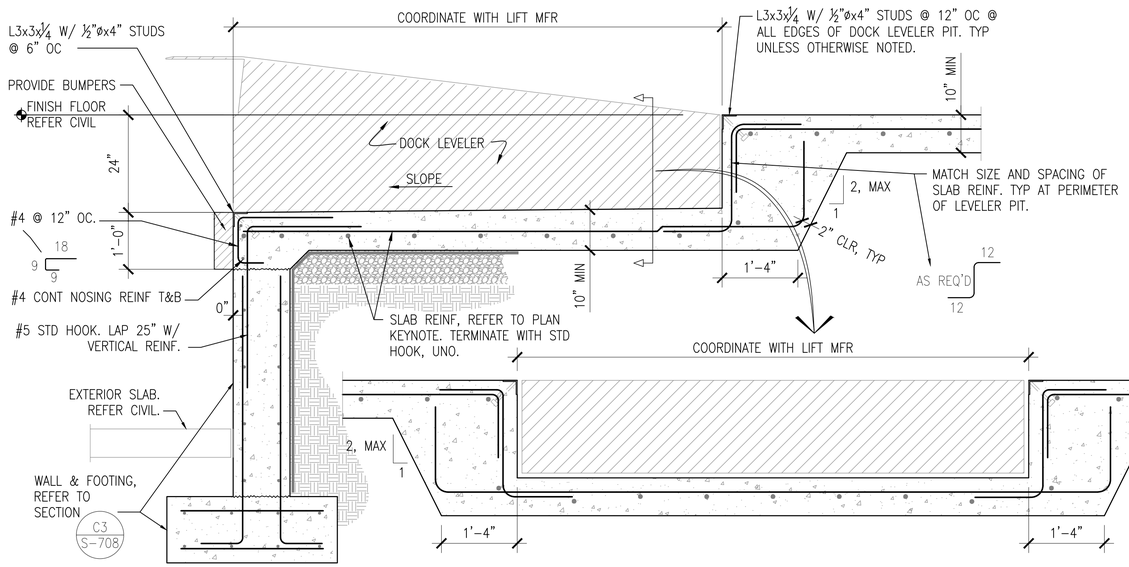

FDN AND SLAB AT DOCK LEVELER

SCALE: 3/4" = 1'-0" S-708 A1

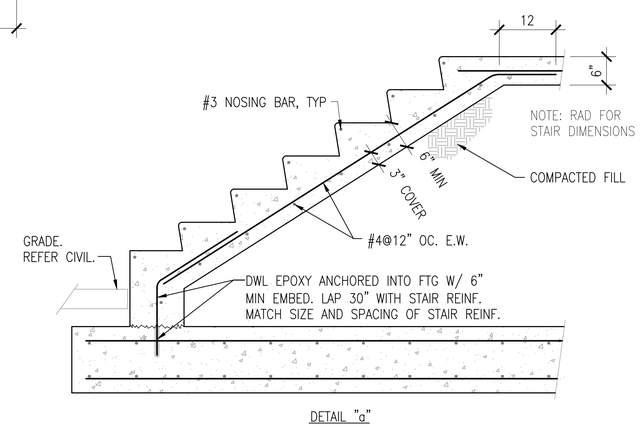

DETAIL "a"

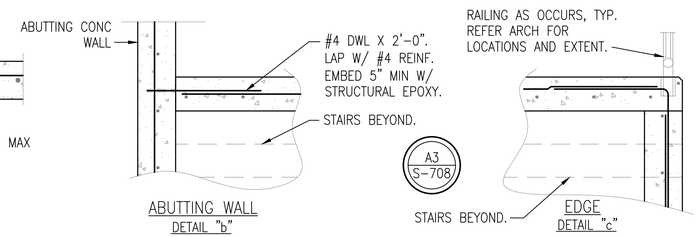

ABUTTING WALL DETAIL "b"

EDGE DETAIL "c"

SECTION THROUGH EXTERIOR STAIR

SCALE: 3/4" = 1'-0" S-708 A3

KEYNOTES

1. SAFETY RAILING.
2. CONCRETE RAMP WITH 1:10 SLOPE. REINFORCE SLAB AND RAMP WITH #5 BARS @ 12: OC EA WAY, CENTERED IN SLAB. REFER TO CIVIL PLANS FOR ADDITIONAL INFORMATION AND ELEVATION.
3. DOCK LEVELER WITH BUMPERS. REINFORCED WITH #5 BARS @ 12: OC EA WAY, CENTERED IN SLAB.
4. STAIRS WITH SAFETY NOSING. THE STAIR SHOWN HAS 6 RISERS EQUALLY SPACED AND 6 TREADS.
5. FOOTING, REFER TO C3/S-708 FOR SIZE AND REINFORCING.
6. DOCK CHAIN BOLLARD BARRIER SYSTEM, TWO 5-1/2" DIA X 42" HIGH STEEL BOLLARDS, PAINTED YELLOW, FLUSH MOUNTED ON CONCRETE WITH A 10' LONG BARRIER CHAIN. SECURE BOLLARDS WITH (4) 1/2" DIA. X 4" LONG EXPANSION BOLTS.

GRAPHIC SCALE

1/4"=1'-0" 0' 2' 4' 8'

3/4"=1'-0" 0 1' 2' 3'

MARK	DESCRIPTION	DATE

NAVFAC

SEAL

A/E INFO

APPROVED

FOR COMMANDER NAVFAC

ACTIVITY: Approved by LCDR VINCE DEL GRECO, ROICC with PWD YORKTOWN, via Email.

SATISFACTORY TO DATE 03/26/2026

DES VAA | DRW MTW | CHK CWJ

PM/DM MME/WJW

BRANCH MANAGER DLB

CHIEF ENG/ARCH JWJ

FIRE PROTECTION HPN

DEPARTMENT OF THE NAVY
NAVAL FACILITIES ENGINEERING SYSTEMS COMMAND
MIDLANT PDC CORE
NAVAL FACILITIES ENGINEERING SYSTEMS COMMAND
NAVAL STATION NORFOLK, VIRGINIA
NAVAL WEAPONS STATION
YORKTOWN, VIRGINIA
P-171 WEAPONS MAGAZINES
FORKLIFT RAMP, ELEVATION, AND DETAILS

SCALE: AS SHOWN

EPROJECT NO.: 1737010

CONSTR. CONTR. NO.: ##

NAVFAC DRAWING NO.: 12942015

SHEET 357 OF 499

S-708

DRAWFORM REVISION: 14 SEP 2023

FILE NAME: K:\VA\Yorktown\MILCON\2024_1737010_P171_Weapons_Magazines\B_Design\DWGS - MAGAZINE\Sheet\07_STRUCT\S-708 FORKLIFT RAMP, ELEVATION, AND DETAILS.dwg LAYOUT NAME: FORKLIFT RAMP ELEVATION AND DETAILS PLOTTED: Tuesday, March 31, 2026 - 1:53pm USER: miguel.walker

X 20A 3P OR X 100AF 80AT 3P — LOW - VOLTAGE CIRCUIT BREAKER (CB). RATINGS AND NO. OF POLES AS SHOWN. WHEN SPECIFIC TYPE IS REQUIRED, X INDICATES TYPE.

TYPES:
MCCB - MOLDED CASE
ICCB - INSULATED CASE
LVP - LOW - VOLTAGE POWER
MCP - MOTOR CIRCUIT PROTECTOR
(RATING PER CONNECTED LOAD)

CB — SEPARATELY MOUNTED CIRCUIT BREAKER; SEE ELECTRICAL ONE - LINE DIAGRAM OR SCHEDULE FOR DESCRIPTION

GFP — GROUND FAULT PROTECTION

FUSE, SIZE, AND NUMBER OF FUSES AS NOTED

FUSED CUTOUT, CURRENT RATING, FUSE SIZE, AND NUMBER OF POLES AS NOTED

FUSIBLE SWITCH, CURRENT RATING, FUSE SIZE, AND QUANTITY AS NOTED

NON-FUSED SWITCH, CURRENT RATING, AND NUMBER OF POLES AS NOTED

THERMAL OVERLOAD ELEMENT

OL — THERMAL OVERLOAD RELAY CONTACT

OR — DISCONNECT OR SAFETY SWITCH, 30A, 3P, NON-FUSED UNLESS OTHERWISE NOTED

DISCONNECT OR SAFETY SWITCH WITH AUXILIARY CONTACTS, 30A, 3P, NON-FUSED UNLESS OTHERWISE NOTED

7 1/2 OR HP — MOTOR WITH DESIGN HORSEPOWER (WHEN INDICATED)

MOTOR

GENERATOR

ATS — TRANSFER SWITCH, CURRENT RATING, AND NUMBER OF POLES AS NOTED
ATS - AUTOMATIC
MTS - MANUAL

TRANSFORMER
△ 3-PHASE, 3-WIRE DELTA CONNECTION
Y 3-PHASE, 4-WIRE GROUNDED WYE CONNECTION

LP100 208/120V 3Ø,4W — SWITCHBOARD OR PANELBOARD; NAME, VOLTAGE, PHASE, NUMBER OF WIRES WHEN INDICATED

100 KVA — NON-MOTOR LOAD WITH DESIGN KVA, KW, OR AMP

CPT — CONTROL POWER TRANSFORMER (CPT)

VOLTAGE TRANSFORMER (VT OR PT)

CURRENT TRANSFORMER (CT)

WH — UTILITY WATT-HOUR METER PER UTILITY REQUIREMENTS

DMP — DIGITAL METERING PACKAGE

RTM — RUN TIME METER

GROUND

LIGHTNING ARRESTER

SPD — LOW VOLTAGE SURGE PROTECTIVE DEVICE

ELECTRICAL CONNECTION

OR — NO ELECTRICAL CONNECTION

SV OR — SOLENOID VALVE

X Y — CONTROL/RELAY COIL; X INDICATES TYPE, Y INDICATES LOOP NO. WHEN USED
TYPES:
CR - CONTROL RELAY
DP - DEFINITE PURPOSE RELAY
LC - LIGHTING CONTACTOR
M - MOTOR STARTER
PC - PHOTO CELL
TC - TIME CLOCK
TR - TIMING RELAY

NORMALLY OPEN CONTACT (N.O.)

NORMALLY CLOSED CONTACT (N.C.)

OFF HAND AUTO XOO OOX — 3 POSITION SELECTOR SWITCH, MAINTAINED CONTACTS; UNLESS OTHERWISE NOTED, 2-POSITION SIMILAR

NORMALLY OPEN PUSHBUTTON, MOMENTARY CONTACT UNLESS OTHERWISE NOTED

NORMALLY CLOSED PUSHBUTTON, MOMENTARY CONTACT UNLESS OTHERWISE NOTED

X — INDICATING LIGHT, X INDICATES LENS COLOR

X — PUSH TO TEST INDICATING LIGHT, X INDICATES LENS COLOR

LENS COLORS:

R - RED	Y - YELLOW
G - GREEN	W- WHITE
B - BLUE	A - AMBER

T — TRANSFORMER

SS — SELECTOR SWITCH

PUSHBUTTON

CS — CONTROL STATION

CONTROL PANEL INTEGRAL OR PROVIDED WITH ASSOCIATED EQUIPMENT

CONTROL PANEL WITH DISCONNECT SWITCH INTEGRAL OR PROVIDED WITH ASSOCIATED EQUIPMENT

J — JUNCTION OR PULL BOX

ELECTRICAL EQUIPMENT ENCLOSURE: PANELBOARD, SWITCHBOARD, MOTOR CONTROL CENTER, CONTROL PANEL, OR OTHER EQUIPMENT AS INDICATED

480/277V PANELBOARD

208/120V PANELBOARD

PC — PHOTOCELL

OS — OCCUPANCY SENSOR - CEILING MOUNTED

OS — OCCUPANCY SENSOR - WALL MOUNTED

X Y Z — WALL MOUNTED LUMINAIRE - COMPACT FLUORESCENT OR LED

X Y Z — CEILING/PENDANT MOUNTED LUMINAIRE - FLUORESCENT OR LED

X Y Z — CEILING/PENDANT MOUNTED LUMINAIRE - FLUORESCENT OR LED (NORMAL/EMERGENCY)

X Y Z — WALL/SURFACE MOUNTED LUMINAIRE - FLUORESCENT OR LED (NORMAL/EMERGENCY)

LIGHTING FIXTURE SUBSCRIPTS:
X - INDICATES FIXTURE TYPE PER LIGHTING FIXTURE SCHEDULE
Y - INDICATES CIRCUIT NUMBER FROM PANELBOARD
z - INDICATES CONTROLLING SWITCH (IF REQUIRED)

$ Y X — TOGGLE SWITCH

SUBSCRIPTS:
X - INDICATES TYPE
NONE - SINGLE POLE
3 - THREE-WAY
4 - FOUR-WAY
M - TOGGLE SWITCH, HORSEPOWER/MOTOR RATED
K - KEY SWITCH
TE - MANUAL MOTOR STARTER WITH THERMAL ELEMENT
P - PILOT LIGHT
L - LIGHTED HANDLE
Y - INDICATES CONTROLLING SWITCH (IF REQUIRED)
WP - WEATHER PROOF
DS - 0-10V DIMMING
OS - DUAL TECH OCCUPANCY SENSOR

X Y — QUAD-DUPLEX RECEPTACLE, TWO NEMA 5-20R UNDER COMMON COVER PLATE

X Y — DUPLEX RECEPTACLE, NEMA 5-20R

SUBSCRIPTS:
X - INDICATES TYPE
GFCI - GROUND FAULT CIRCUIT INTERRUPTER
WP - WEATHER PROOF
C - CONTROLLED RECEPTACLE, MARKING PER NEC 406.3(E), GREEN Y - INDICATES CIRCUIT NUMBER FROM PANELBOARD

SPECIAL DEVICE AND/OR CONNECTION AS NOTED

CONDUIT TURNING UP

CONDUIT TURNING DOWN

HOME RUN TO PANEL, 2 #12, 1 #12G IN 3/4"C UNLESS OTHERWISE NOTED

CIRCUIT RUN BETWEEN DEVICES EXPOSED IN NON-ARCHITECTURALLY FINISHED AREAS; CONCEALED IN ARCHITECTURALLY FINISHED AREAS. CONDUIT AND CONDUCTOR SIZES MUST BE THE SAME AS THE HOMERUN FOR THE CIRCUIT.

CONDUIT RUN BETWEEN DEVICES CONCEALED IN NON-ARCHITECTURALLY FINISHED AREAS OR UNDER FLOOR SLAB. CONDUIT AND CONDUCTOR SIZES MUST BE THE SAME AS THE HOMERUN FOR THE CIRCUIT.

UNDERGROUND CONDUIT

CIRCUIT CONTINUATION

CONDUIT STUBBED OUT AND CAPPED

XX-XXXX — CONDUIT TAG OR CIRCUIT NUMBER - WIRE AND CONDUIT SIZE AS SPECIFIED IN CIRCUIT SCHEDULE ON THE SHEETS

G — GROUNDING CONDUCTOR

E — UNDERGROUND ELECTRICAL DUCT BANK

C — UNDERGROUND COMMUNICATIONS CONCRETE ENCASED DUCT BANK

OHE — OVERHEAD SECONDARY CIRCUIT AND CONDUCTORS

EE — DIRECT BURIED CONDUIT

LP — LIGHTNING PROTECTION CONDUCTOR

GROUND ROD

GROUND TEST WELL

XX — HH: HANDHOLE
MH: MANHOLE

AIR TERMINAL

GROUND CONNECTION

1. THIS IS A STANDARD ELECTRICAL SYMBOLOGY SHEET. NOT ALL SYMBOLS MAY BE USED ON THIS PROJECT.

2. SCREENING OR SHADING OF WORK IS USED TO INDICATE EXISTING COMPONENTS OR TO DE-EMPHASIZE PROPOSED IMPROVEMENTS TO HIGHLIGHT SELECTED TRADE WORK. REFER TO CONTEXT OF EACH SHEET FOR USAGE.

GENERAL NOTES:

1. PROJECT DESIGN AND EXECUTION MUST CONFORM TO THE LATEST VERSIONS OF:
(A) NFPA 70 (NATIONAL ELECTRICAL CODE)
(B) NESC (NATIONAL ELECTRICAL SAFETY CODE)
(C) NFPA 101 (LIFE SAFETY CODE)
(D) NFPA 780 (STANDARD FOR INSTALLATION OF LIGHTNING PROTECTION SYSTEMS)
(E) NAVSEA OP 5 (AMMUNITION AND EXPLOSIVES SAFETY ASHORE)
(F) APPLICABLE LOCAL, STATE AND FEDERAL CODES.

2. CONTRACTOR MUST COORDINATE FINAL LOCATION OF ELECTRICAL EQUIPMENT AND COMPONENTS WITH ALL OTHER TRADES PRIOR TO INSTALLATION. THE CONTRACTOR MUST BE RESPONSIBLE FOR SECURING SPACE REQUIREMENTS FOR ELECTRICAL EQUIPMENT CLEARANCE AND CORRECT ROUGH-IN LOCATIONS OF ELECTRICAL CONNECTIONS.

3. DRAWINGS ARE IN GENERAL DIAGRAMMATIC IN NATURE. FIELD ADJUST CONDUIT AND TRAY ROUTING BASED ON COORDINATION WITH OTHER NEW UTILITIES, STRUCTURES AND EQUIPMENT. NOT ALL COMPONENTS, CONDUITS, AND EQUIPMENT ARE SHOWN IN ALL VIEWS. THE CONTRACTOR MUST MAKE USE OF THE ENTIRE SET OF DRAWINGS, REQUIREMENTS, AND SPECIFICATIONS IN ORDER TO INCLUDE ALL COMPONENTS NECESSARY TO CONSTRUCT A FULLY OPERATIONAL SYSTEM.

6. ALL EQUIPMENT MUST BE INSTALLED IN ACCORDANCE WITH MANUFACTURER'S APPROVED, PUBLISHED LITERATURE.

7. ALL UTILITY SERVICES SUCH AS ELECTRIC, TELECOM, SECURITY, INTRUSION DETECTION SYSTEM, FIRE ALARM SYSTEM MUST BE ROUTED UNDERGROUND AT MINIMUM OF 50-FEET AWAY FROM BUILDING FOR SERVICE CONNECTION.

8. ALL CONDUITS MUST BE A RIGID GALVANIZED STEEL CONDUIT (RGS) OR LIQUID-TIGHT, METAL FLEXIBLE CONDUIT. CONDUIT PENETRATIONS THROUGH CONCRETE MUST BE PVC-COATED RIGID GALVANIZED STEEL CONDUIT (PVC-RGS) THROUGH THE LENGTH OF THE PENETRATION, WITH 3" TO 6" AT BOTH PENETRATION ENDS FOR CLEARANCE. CONDUITS PENETRATING UNDERNEATH FOUNDATION IS PROHIBITED. CONDUIT ELBOW PLACEMENT MUST CONSIDER THIS CLEARANCE DURING DESIGN AND INSTALLATION.

9. PROVIDE AND INSTALL THW OR THWN INSULATED CONDUCTORS WITH MINIMUM OF #12 AWG, STRANDED COPPER.

10. ALL NEMA ENCLOSURE RATINGS INDICATED ON DOCUMENTS MAY BE REVISED AS REQUIRED BY THE ENVIRONMENTAL CONDITIONS DURING SITE ADAPTATION PROJECTS.

ELECTRICAL ABBREVIATIONS

A	AMPERES OR TRIP AMPERES
AC	ALTERNATING CURRENT
AFF	ABOVE FINISHED FLOOR
AFG	ABOVE FINISHED GRADE
AIC	SYMMETRICAL AMPS INTERRUPTING CAPACITY
AWG	AMERICAN WIRE GAUGE
A/R	AS REQUIRED
ARR.	ARRESTOR
BLDG	BUILDING
BRKT	BRACKET
C	CONDUIT
CB	CIRCUIT BREAKER
CKT	CIRCUIT
CL	CURRENT LIMITING
CO	CONDUIT ONLY
CTL	CONTROL
DC	DIRECT CURRENT
D.T.C.	DATA TERMINAL CABINET
EMCS	ENERGY MONITORING AND CONTROL SYSTEM
FACP	FIRE ALARM CONTROL PANEL
FT	FOOT, FEET
GFCI	GROUND FAULT CIRCUIT INTERRUPTER, 5MA PERSONNEL PROTECTION UNLESS OTHERWISE NOTED.
GND	GROUND
HZ	HERTZ
IAW	IN ACCORDANCE WITH
IG	ISOLATED GROUND
IN	INCH, INCHES
IR	INFRARED
KV	KILOVOLTS
KVA	KILOVOLT AMPERES
KVAR	KILOVOLT AMPS REACTIVE
KWH	KILOWATT HOURS
L-L	LINE TO LINE
L-N	LINE TO NEUTRAL
MFR	MANUFACTURER
MH	MANHOLE
MIN	MINIMUM
MTD	MOUNTED
MTG	MOUNTING
NAFSEA	NAVAL SEA SYSTEMS COMMAND
N.C.	NORMALLY CLOSED
NEC	NATIONAL ELECTRICAL CODE
NEMA	NATIONAL ELECTRICAL MANUFACTURERS ASSOCIATION
NEUT	NEUTRAL
NOSSA	NAVAL ORDNANCE SAFETY & SECURITY ACTIVITY

MARK	DESCRIPTION	DATE

NAVFAC

SEAL

A/E INFO

APPROVED
Joseph E. Greco, P.E.
FOR COMMANDER NAVFAC

ACTIVITY
Approved by LCDR VINCE DEL GRECO, ROICC with PWD YORKTOWN, via Email.
SATISFACTORY TO DATE 03/26/2026

DES	CPO	DRW	CPO	CHK	JDU
PM/DM	MME/WJW				
BRANCH MANAGER	WRB				
CHIEF ENG/ARCH	JWJ				
FIRE PROTECTION	HPN				

DEPARTMENT OF THE NAVY
NAVAL FACILITIES ENGINEERING SYSTEMS COMMAND
MIDLANT PDC CORE
NAVAL FACILITIES ENGINEERING SYSTEMS COMMAND
NAVAL STATION NORFOLK, VIRGINIA
NAVAL WEAPONS STATION
YORKTOWN, VIRGINIA
P-171 WEAPONS MAGAZINES
ELECTRICAL SYMBOLS & LEGEND

SCALE: NONE
EPROJECT NO.: 1737010
CONSTR. CONTR. NO. ##
NAVFAC DRAWING NO. 12942018
SHEET 358 OF 499
E-001
DRAWFORM REVISION: 14 SEP 2023

FILE NAME: K:\NAVYorktown\MLCON\2024_1737010_P171_Weapons_Magazines\B_Design\DWGS - MAGAZINES\Sheet13_ELEC\P171-1737010-M4MGZ-E-001.dwg LAYOUT NAME: P171-1737010-M4MGZ-E-001 PLOTTED: Tuesday, March 31, 2026 - 6:59am USER: dayton.obrien

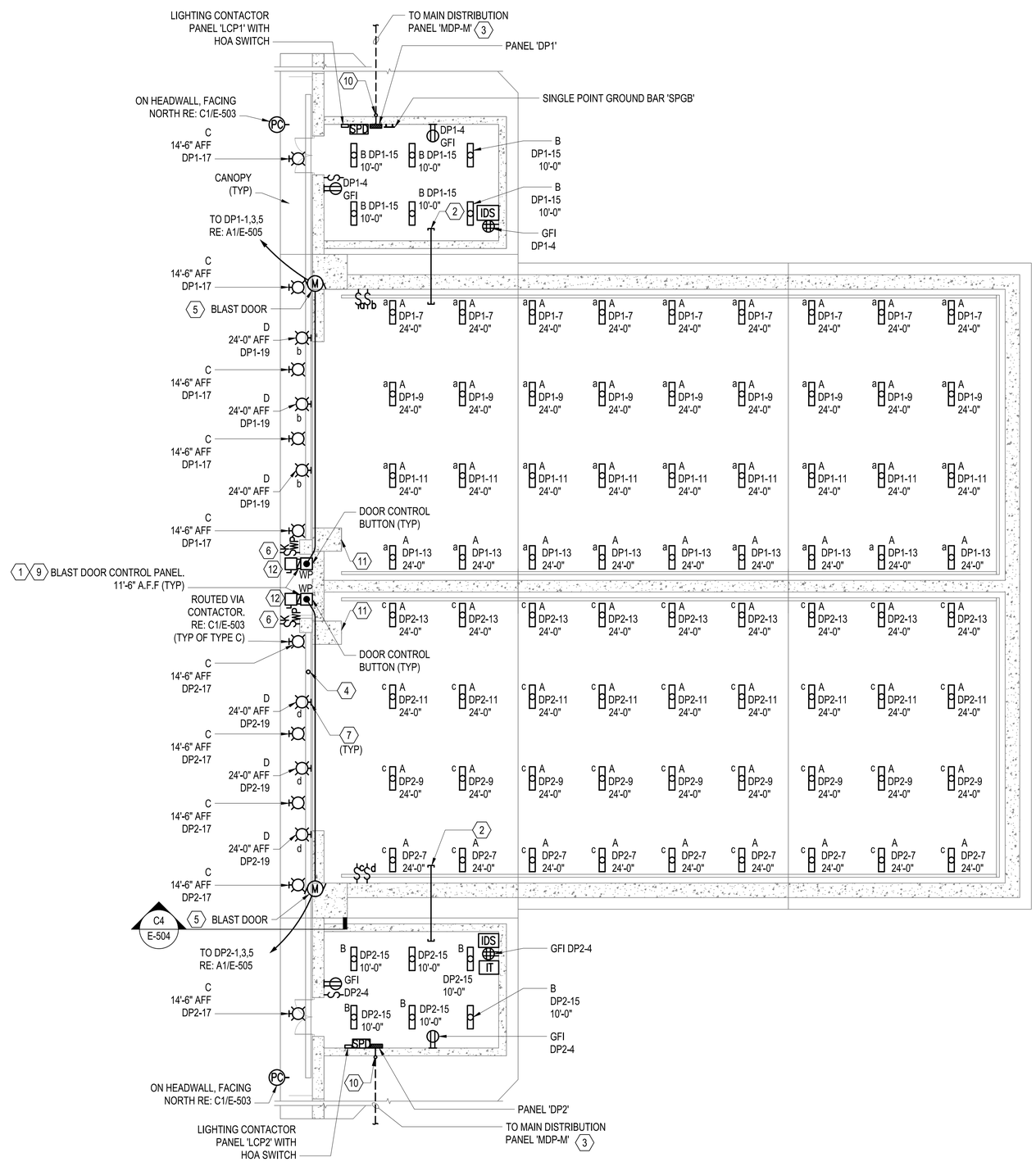

A1 ELECTRICAL FLOOR PLAN

SCALE: 3/32" = 1'-0"

GENERAL SHEET NOTES

1. COORDINATE FINAL LOCATIONS OF ALL LIGHTING FIXTURES AND ASSOCIATED LIGHTING CONTROLS WITH OTHER TRADES PRIOR TO ROUGH-IN.
2. ALL CONDUIT MUST BE RIGID GALVANIZED STEEL CONDUIT UNLESS INDICATED OTHERWISE.
3. EXPOSED CONDUITS ON EXTERIOR WALLS MUST BE PROHIBITED.
4. ECM AND MECHANICAL ROOM WILL BE SEPARATE IDS ZONES. PROVIDE DEVICES, CONTROLLERS, AND PROGRAMMING, AS REQUIRED.
5. PROPOSED IDS VENDOR TO PERFORM COVERAGE CALCULATIONS, INCLUDING OBSTRUCTIONS, TO VERIFY QUANTITY AND LOCATION OF MOTION DETECTORS IN THE ECM AND MECHANICAL ROOM. FINAL LOCATIONS AND QUANTITIES OF MOTION DETECTORS TO BE INSTALLED PER IDS VENDOR SHOP DRAWINGS.
6. REFER TO GENERAL NOTES ON E-001 FOR ADDITIONAL INFORMATION.

KEYNOTES

1. COORDINATE ALL POWER AND CONTROL RACEWAY REQUIREMENTS WITH MANUFACTURER. PROVIDE CONTROL WIRING FOR INTERLOCKS WITH DOOR LIMIT SWITCHES AND MECHANICAL BYPASS FOR DOOR OPERATION.
2. IN ADDITION TO THE CONDUITS REQUIRED FOR RECEPTACLES/LIGHTING/LOW VOLTAGE SYSTEMS/ IDS/CONTROLS/BLAST DOOR/EQUIPMENT, PROVIDE ADDITIONAL (1)3/4"C FOR POWER SITE ADAPTATION, (1)1"C FOR FUTURE HVAC CONTROLS AND (3)1-1/2"C SPARES. CONNECT CONDUITS BETWEEN MECHANICAL ROOM AND MAGAZINE AREA AND CAP AT BOTH ENDS.
3. SEE SHEET EG201 FOR MDP-M LOCATION. REFER TO ONE-LINE ON SHEET E-601 FOR ADDITIONAL INFORMATION.
4. ROUTE ALL CONDUITS ON SURFACE AS REQUIRED TO AVOID CONDUIT PENETRATIONS ON HEADWALL ABOVE BLAST DOOR.
5. DOOR CONTROLLER MUST BE PROVIDED WITH SAFETY INTERLOCK FEATURE WHEN SENSING MECHANICAL ROOM IN VACANCY MODE. DOOR CONTROL FEATURE MUST INCLUDE A DOOR CONTACT/RELAY INTERLOCKING WITH BLAST DOOR CONTROL SYSTEM AND MECHANICAL DOOR, SO THAT ONCE THE MECHANICAL DOOR IS IN 'OPEN MODE' OR 'UNLOCKED', THE BLAST DOOR CONTROL SYSTEM WILL BE DISABLED FROM MOVING THE BLAST DOOR.
6. PROVIDE A MANUAL OVERRIDE SWITCH TO CONTROL BLAST DOOR. SWITCH MUST BE KEY OPERATED AND LOCATED OUTSIDE THE PILASTER COLUMN WITH WATERPROOF COVER.
7. FIXTURE TYPE 'D' MUST BE CONTROLLED BY SWITCHLEG 'b'.
8. NOT USED.
9. COORDINATE WITH DOOR MANUFACTURER FOR QUANTITY.
10. UNDERGROUND CONDUIT MUST STUB-UP BEFORE PENETRATING THRU WALL FOR CONNECTION TO PANELBOARD.
11. DO NOT MOUNT ELECTRICAL EQUIPMENT ON SURFACE OF THIS PILASTER WALL. PROVIDE 16" CLEARANCE IN FRONT OF WALL AREA.
12. PROVIDE DISCONNECT FOR DOOR CONTROLLER IN ACCORDANCE WITH MANUFACTURER'S REQUIREMENTS. SEE DETAIL A3/E-506.

GRAPHIC SCALE(S)

3/32"=1'-0" 0' 8' 16' 24'

MARK	DESCRIPTION	DATE

NAVFAC

SEAL

A/E INFO

APPROVED

FOR COMMANDER NAVFAC

ACTIVITY: Approved by LCDR VINCE DEL GRECO, ROICC with PWD YORKTOWN, via Email.

SATISFACTORY TO DATE 03/26/2026

DES CPO DRW CPO CHK JDU

PM/DM MME/WJW

BRANCH MANAGER WRB

CHIEF ENG/ARCH JWJ

FIRE PROTECTION HPN

DEPARTMENT OF THE NAVY
NAVAL FACILITIES ENGINEERING SYSTEMS COMMAND
MIDLANT PDC CORE

NAVAL FACILITIES ENGINEERING SYSTEMS COMMAND
NAVAL STATION NORFOLK, VIRGINIA

NAVAL WEAPONS STATION YORKTOWN, VIRGINIA

P-171 WEAPONS MAGAZINES

ELECTRICAL FLOOR PLAN

SCALE: AS SHOWN

EPROJECT NO. 1737010

CONSTR. CONTR. NO. ##

NAVFAC DRAWING NO. 12942019

SHEET 359 OF 499

E-101

DRAWFORM REVISION: 14 SEP 2023

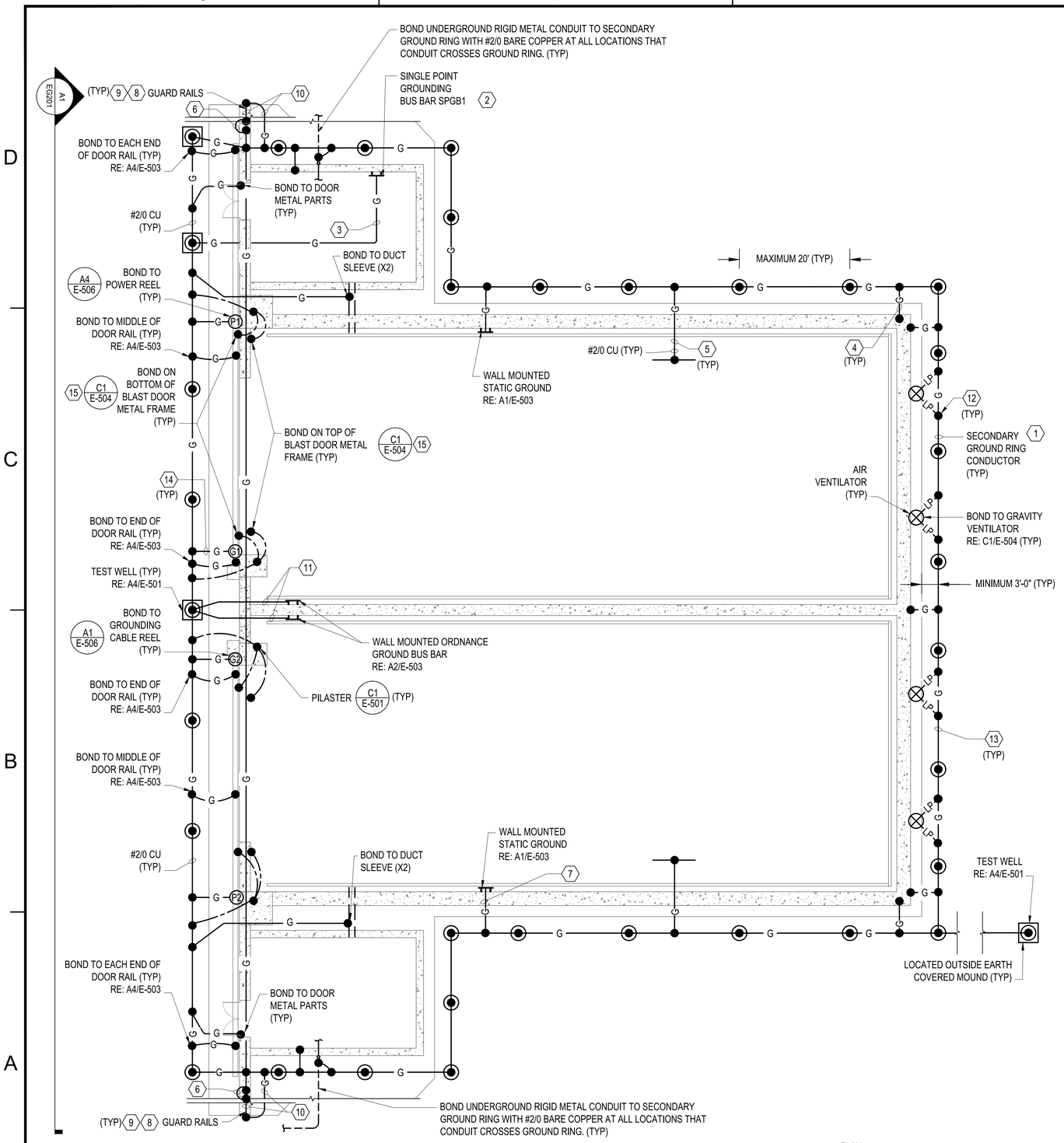

A1 ELECTRICAL LIGHTNING PROTECTION & GROUNDING PLAN

SCALE: 3/32" = 1'-0"

GENERAL SHEET NOTES

1. THE TERM 'LIGHTNING PROTECTION SYSTEM' WILL BE REFERRED TO AS 'LPS' HENCEFORTH.
2. THE STANDARD DESIGN DRAWINGS FOR LPS INSTALLATION ARE IN COMPLIANCE WITH NFPA 780 AND AFMAN 32-1065 CRITERIA, AND MANUFACTURED IN ACCORDANCE WITH U.L. 96, IN ACCORDANCE WITH NAVSEA OP 5 OR DESR 6055.09_AFMAN 91-201.
3. CONTRACTOR MUST PROVIDE AN UNDERWRITER'S LABORATORY (UL) LIGHTNING PROTECTION INSPECTION CERTIFICATE FOR ANY FACILITY HAVING A LPS INSTALLATION. ADDITIONALLY, A THIRD PARTY INSPECTION COMPANY MUST CERTIFY THE LPS IS IN COMPLIANCE WITH THE STANDARD DESIGN DRAWINGS AS INDICATED. IN ADDITION, CONTRACTOR MUST NOTIFY CONTRACTING OFFICER FOR NAVFAC TO INSPECT AND CERTIFY THE LPS PRIOR TO COMPLETION. REFER TO S-002 FOR PROCEDURE TESTING AND VERIFICATION REQUIREMENTS.
4. COMPONENTS INDICATED ON THIS SHEET SHOW GENERAL DIRECTION FOR THE LPS COMPONENTS. CONTRACTOR MUST PROVIDE NECESSARY COMPONENTS FOR A COMPLETE LPS.
5. PROVIDE #2/0 BARE COPPER GROUND CONDUCTOR FOR ALL BONDING AND GROUNDING, INCLUDING THE BONDING TO ALL METAL PARTS, INCLUDING GUARDRAILS, DOOR AND DOOR FRAMES, REINFORCEMENT IN FLOOR/WALL, METAL AIR VENTILATOR AND LOUVERS.
6. METAL BODIES WITHIN 6'-0" OF THE LPS MUST BE BONDED TO THE SYSTEM IN ACCORDANCE WITH NFPA 780.
7. REFER TO LPS AND GROUNDING DETAILS ON SHEET E-501, E-502, E-503 FOR ADDITIONAL INFORMATION.
8. ALL GROUNDING CONDUCTORS MUST BE #2/0 BARE COPPER UNLESS NOTED OTHERWISE.
9. ORDNANCE AND STATIC GROUND BUS BARS MUST BE COPPER. INSTALL 30" ABOVE FINISHED FLOOR.
10. METAL GUARD RAILS MUST BE CONSTRUCTED AND WILL SERVE AS STRIKE TERMINATION DEVICES PER NFPA 780 (LATEST REV). GUARD RAILS MUST NOT EXCEED 45" HIGH AND MUST BE IN COMPLIANCE WITH OSHA REG. 1926.502 FALL PROTECTION SYSTEM CRITERIA AND PRACTICES PER 1926.502 (B)(1).
11. THE GROUND RING RESISTANCE TO EARTH MUST BE MAINTAINED AT 25 OHMS OR LESS. IF THIS REQUIREMENT IS NOT ACHIEVABLE, EVEN THROUGH ADDITIONAL GROUND RODS OR GRID CONDUCTOR LOOP, NOTIFY NOSSA/GOVERNMENT FOR ADDITIONAL ACTIONS TO TAKE IN ORDER TO DECREASE THE RESISTANCE TO EARTH AS LOW AS POSSIBLE.
12. ALL BONDING CONNECTIONS MUST NOT EXCEED RESISTANCE OF 1 OHM, INCLUDING AIR TERMINATION SYSTEM, DOWN CONDUCTORS TO LIGHTNING PROTECTION GROUNDING SYSTEM IAW NAFSEA OP5, SECTION 5-4.1.
13. A CATENARY SYSTEM MAY BE PROVIDED IN ADDITION TO FARADAY CAGE SYSTEM UNDER SITE-ADAPTATION. THE SYSTEM MUST BE BONDED BACK TO THE HEADWALL AS REQUIRED. CONTRACTOR MUST SUBMIT CATENARY SYSTEM AND FARADAY CAGE DETAILS FOR APPROVAL PRIOR TO CONSTRUCTION. REFER TO NAVSEA OP 5 FOR PRIMARY GROUNDING SYSTEM OR AFMAN 10-65.
14. THE STRUCTURAL COMPONENTS OF THE BUILDING MUST BE BONDED BETWEEN THE FLOOR, WALLS AND ROOF. REBAR MUST BE BONDED TOGETHER OR BY ADDING EXTERNAL BONDING GROUND CONDUCTORS BETWEEN COMPONENTS. THE COMPONENTS MUST BE BONDED AT EVERY 5 FEET MAXIMUM INTERVAL IN ACCORDANCE WITH NAVSEA OP5 6-4.1.1.3. REFER TO DETAIL A1/E-504.
15. REFER TO GENERAL NOTES ON E-001 FOR ADDITIONAL INFORMATION.
16. LPS WILL BE A FARADAY CAGE TYPE SYSTEM WITH THE STRUCTURAL COMPONENTS OF THE MAGAZINES BONDED TOGETHER AS REQUIRED BY THE NAVSEA OP5 REQUIREMENTS. ADDITIONALLY, 3/16-INCH THICK MINIMUM AND 42-INCH HIGH MAXIMUM METAL GUARDRAILS WILL BE UTILIZED AS STRIKE TERMINATION DEVICES ON THE MAGAZINE HEADWALLS WHICH WILL BE BONDED TO THE SECONDARY GROUND RING AT BOTH ENDS PROVIDING A TWO-WAY PATH TO GROUND.
17. SEE FENCE GROUNDING DETAIL ON ES505.

KEYNOTES

1. ROUTE #2/0 BARE COPPER GROUNDING CONDUCTOR (BURIED GROUNDING RING) AS INDICATED, AT 30" MIN. BELOW FINISHED GRADE AND MINIMUM 3'-0" FROM FOUNDATION AROUND FACILITY OR AT LEAST 2'-0" FROM THE BUILDING EXTERIOR DRIP LINE. RE: C3/E-501.
2. PROVIDE SINGLE POINT COPPER GROUNDING BUS BAR. COORDINATE EXACT LOCATION PRIOR TO ROUGH-IN. RE: A3/E-501 AND RE: C4/E-501.
3. ROUTE #2/0 BARE COPPER GROUNDING CONDUCTOR FROM SINGLE POINT GROUNDING BUS BAR IN MECHANICAL ROOM TO SECONDARY GROUNDING RING.
4. ROUTE #2/0 BARE COPPER GROUNDING CONDUCTOR FROM REINFORCED STRUCTURAL STEEL TO SECONDARY GROUNDING RING.
5. ROUTE #2/0 BARE COPPER GROUNDING CONDUCTOR FROM FOUNDATION STEEL REBAR TO SECONDARY GROUND RING.
6. ROUTE #2/0 BARE COPPER GROUNDING CONDUCTOR BETWEEN UPPER AND LOWER GUARD RAILS AND SECURE TO HEADWALL. RE: A1/EG201
7. PROVIDE #2/0 BARE COPPER GROUNDING CONDUCTOR FROM STATIC GROUND TO SECONDARY GROUNDING RING AS INDICATED UTILIZING BOLTED CONNECTIONS FOR EASE IN DISCONNECTING DURING TESTING. PERFORM TESTING PER NAVSEA OP5.
8. ALL HEADWALL GUARD RAILS AND ALL ASSOCIATED POSTS MUST BE DRILLED AND TAPPED WITH THREADED STUDS FOR CONNECTION TO COPPER GROUNDING CONDUCTORS WITH #2/0 COPPER WIRE LUGS. ROUTE #2/0 BARE COPPER GROUNDING CONDUCTOR EXPOSED ALONG THE ENTIRE LENGTH OF HEADWALL. PROVIDE BIMETALLIC CONNECTORS AS REQUIRED FOR ATTACHING GUARD RAILS TO DOWN GROUNDING CONDUCTORS. ALL CONNECTORS, DEVICES AND COMPONENTS UTILIZED MUST BE EITHER UL LISTED OR LABELED AND LISTED FOR ITS USE.
9. GUARD RAILS MUST BE ALUMINUM PIPE. THICKNESS MUST NOT BE LESS THAN 3/16" AND MAXIMUM HEIGHT OF 42" (+/-3"). REFER TO ARCHITECTURAL SPECIFICATIONS AND ELEVATIONS ON DETAIL A1/EG201 FOR ADDITIONAL INFORMATION.
10. ROUTE #2/0 BARE COPPER GROUNDING DOWN CONDUCTOR IN A 1" CONDUIT TO SECONDARY GROUNDING ELECTRODE. DOWN CONDUCTOR MUST BE CONTINUOUS AND ON EXTERIOR OF BUILDING.
11. PROVIDE #2/0 NOT IN GREEN INSULATED COPPER GROUNDING CONDUCTOR IN 1" PVC BETWEEN ORDNANCE GROUND BUS BAR UNDER SLAB TO GROUND TEST WELL AS INDICATED UTILIZING BOLTED CONNECTIONS FOR EASE IN DISCONNECTING DURING TESTING. INSULATION MUST BE STRIPPED BARE FROM TERMINATION POINT UP TO THE POINT OF CONCEALMENT IN CONDUIT. PERFORM TESTING PER NAVSEA OP5. PROVIDE A 3"X9" BLACK PLASTIC BACKGROUND LABEL WITH 1" WHITE LETTERS INDICATING "ORDNANCE GROUND" AT EXPOSED LOCATIONS.
12. PROVIDE #2/0 BARE COPPER LIGHTNING PROTECTION DOWN CONDUCTORS TO SECONDARY GROUNDING ELECTRODE.
13. PROVIDE TWO (2) LIGHTNING GROUND CONDUCTORS - #2/0 BARE COPPER AND CONNECT TO AIR TERMINALS AS INDICATED.
14. PROVIDE A #2/0 BONDING CONDUCTOR FROM SECONDARY GROUND RING TO BLAST DOOR'S GROUND REEL. EXTEND #6 GROUND CONDUCTOR THROUGH FLEXIBLE CARRIER TRACK. MAKE BONDING AT FEASIBLE LOCATION TO ALLOW A FULL DOOR OPERATION WITHOUT ANY INTERFERENCES WITH CABLE REEL OPERATION.
15. PROVIDE #2/0 BONDING CONDUCTOR FROM DOOR METAL EQUIPMENT/DEVICES/METAL DOOR FRAME TO BOTTOM OF PILASTER'S REBAR AND BOND TO SECONDARY GROUND RING AS INDICATED.

GRAPHIC SCALE(S)

3/32"=1'-0" 0' 8' 16' 24'

MARK	DESCRIPTION	DATE

NAVFAC

SEAL

A/E INFO

APPROVED
Digitally signed by VINCE DEL GRECO, ROICC, P.E.
FOR COMMANDER NAVFAC

ACTIVITY
Approved by LCDR VINCE DEL GRECO, ROICC with PWD YORKTOWN, via Email.
SATISFACTORY TO DATE 03/26/2026

DES	CPO	DRW CPO	CHK JDU
PM/DM	MME/WJW		
BRANCH MANAGER	WRB		
CHIEF ENG/ARCH	JWJ		
FIRE PROTECTION	HPN		

DEPARTMENT OF THE NAVY
NAVAL FACILITIES ENGINEERING SYSTEMS COMMAND
MIDLANT PDC CORE
NAVAL FACILITIES ENGINEERING SYSTEMS COMMAND
NAVAL STATION NORFOLK, VIRGINIA
NAVAL WEAPONS STATION
YORKTOWN, VIRGINIA
P-171 WEAPONS MAGAZINES
ELECTRICAL GROUNDING PLAN

SCALE:	AS SHOWN
EPROJECT NO.:	1737010
CONSTR. CONTR. NO.	##
NAVFAC DRAWING NO.	12942020
SHEET	360 OF 499

EG101

DRAWFORM REVISION: 14 SEP 2023

GENERAL SHEET NOTES

1. REFER TO SHEET EG101 AND GENERAL NOTES ON SHEET E-001 FOR ADDITIONAL INFORMATION.
2. LINE WORK ON THIS SHEET ARE #2/0 BARE COPPER GROUNDING CONDUCTORS.

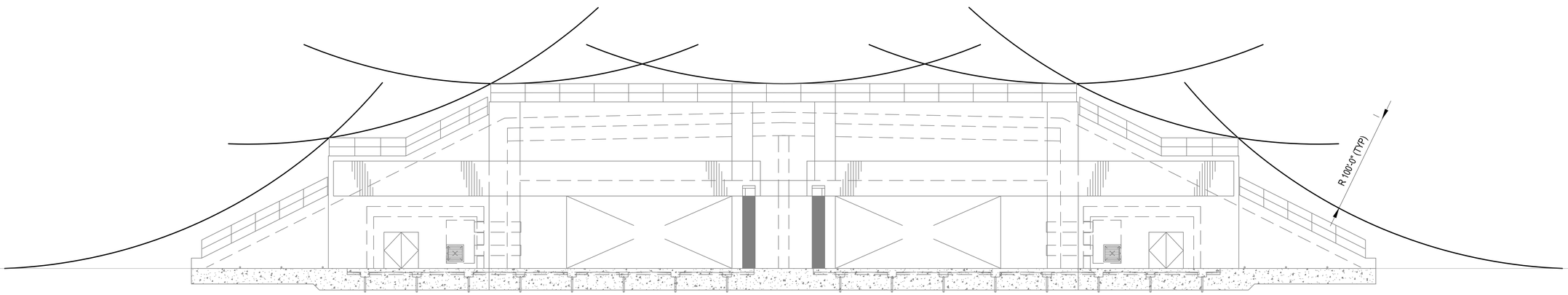

C1 ROLLING SPHERE ANALYSIS - FRONT ELEVATION
SCALE: 3/32" = 1'-0"

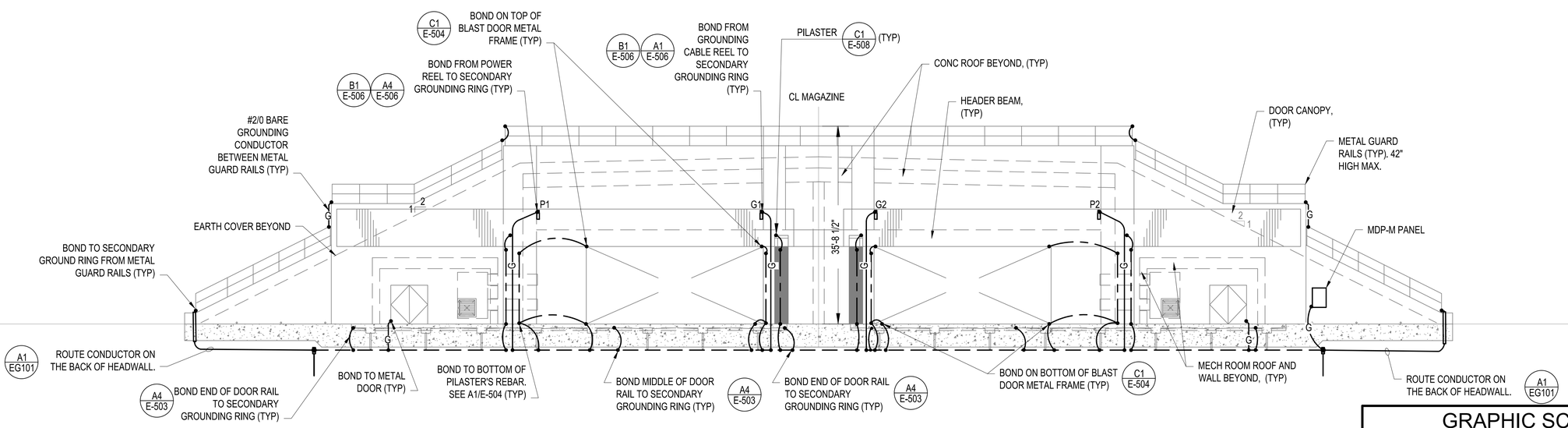

A1 GROUNDING PLAN - FRONT ELEVATION
SCALE: 3/32" = 1'-0"

GRAPHIC SCALE(S)

3/32"=1'-0" 0' 8' 16' 24'

MARK	DESCRIPTION	DATE

SEAL

A/E INFO

APPROVED
FOR COMMANDER NAVFAC

ACTIVITY
Approved by LCDR VINCE DEL GRECO, ROICC with PWD YORKTOWN, via Email.
SATISFACTORY TO DATE 03/26/2026

DES CPO	DRW CPO	CHK JDU	
PM/DM	MME/WJW		
BRANCH MANAGER	WRB		
CHIEF ENG/ARCH	JWJ		
FIRE PROTECTION	HPN		

DEPARTMENT OF THE NAVY
NAVAL FACILITIES ENGINEERING SYSTEMS COMMAND
MIDLANT PDC CORE
NAVAL FACILITIES ENGINEERING SYSTEMS COMMAND
NAVAL STATION NORFOLK, VIRGINIA
NAVAL WEAPONS STATION
YORKTOWN, VIRGINIA
P-171 WEAPONS MAGAZINES
ELECTRICAL LIGHTNING ZONE PROTECTION ELEVATIONS

SCALE: AS SHOWN
EPROJECT NO.: 1737010
CONSTR. CONTR. NO. ##
NAVFAC DRAWING NO. 12942021
SHEET 361 OF 499
EG201
DRAWFORM REVISION: 14 SEP 2023

SIDEFLASH - AT HIGHEST POINT OF BUILDING	METAL PARTS (GUARD RAILS)
H - HEIGHT OF PROTECTED STRUCTURE (FT):	35.4
D - SIDEFLASH (D=H/6) (FT):	6.0
NOTES: H - HEIGHT OF THE STRUCTURE OR OBJECT REQUIRING PROTECTION	

GENERAL SHEET NOTES

1. REFER TO GENERAL NOTES ON E-001 FOR ADDITIONAL INFORMATION.

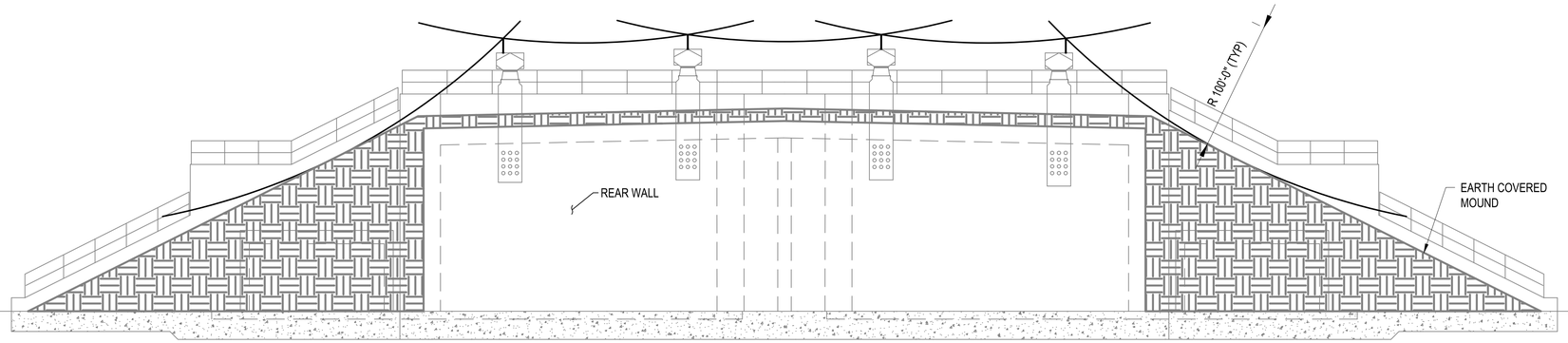

C1 ROLLING SPHERE ANALYSIS - REAR ELEVATION
SCALE: 3/32" = 1'-0"

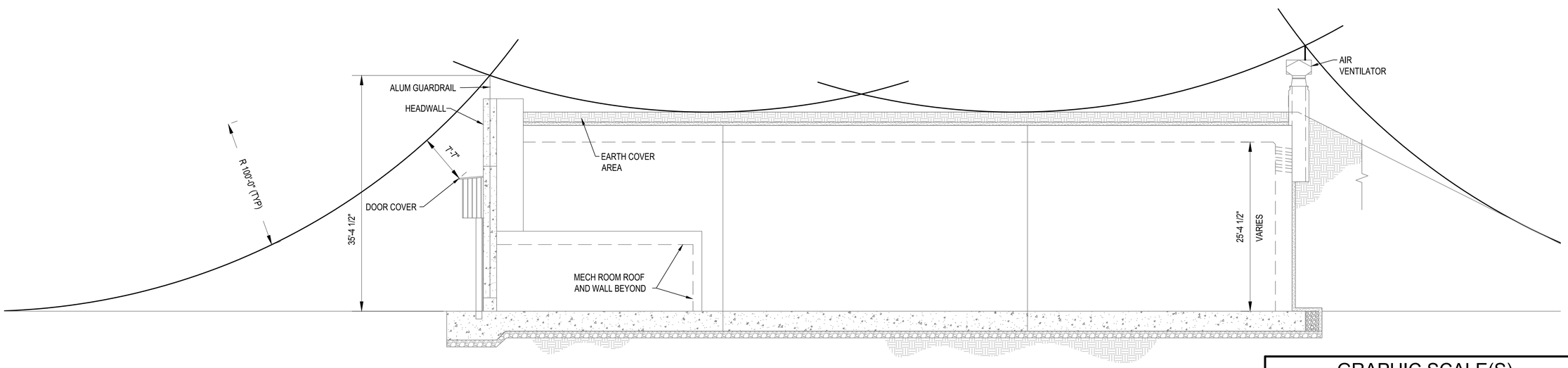

A1 ROLLING SPHERE ANALYSIS - SIDE ELEVATION
SCALE: 3/32" = 1'-0"

GRAPHIC SCALE(S)

3/32"=1'-0" 0' 8' 16' 24'

MARK	DESCRIPTION	DATE

SEAL

A/E INFO

APPROVED
FOR COMMANDER NAVFAC

ACTIVITY
Approved by LCDR VINCE DEL GRECO, ROICC with PWD YORKTOWN, via Email.
SATISFACTORY TO DATE 03/26/2026

DES CPO	DRW CPO	CHK JDU	
PM/DM	MME/WJW		
BRANCH MANAGER	WRB		
CHIEF ENG/ARCH	JWJ		
FIRE PROTECTION	HPN		

DEPARTMENT OF THE NAVY
NAVAL FACILITIES ENGINEERING SYSTEMS COMMAND
MIDLANT PDC CORE
NAVAL FACILITIES ENGINEERING SYSTEMS COMMAND
NAVAL STATION NORFOLK, VIRGINIA
NAVAL WEAPONS STATION
YORKTOWN, VIRGINIA
P-171 WEAPONS MAGAZINES
ELECTRICAL LIGHTNING ZONE PROTECTION ELEVATIONS

SCALE: AS SHOWN
EPROJECT NO.: 1737010
CONSTR. CONTR. NO. ##
NAVFAC DRAWING NO. 12942022
SHEET 362 OF 499
EG202
DRAWFORM REVISION: 14 SEP 2023

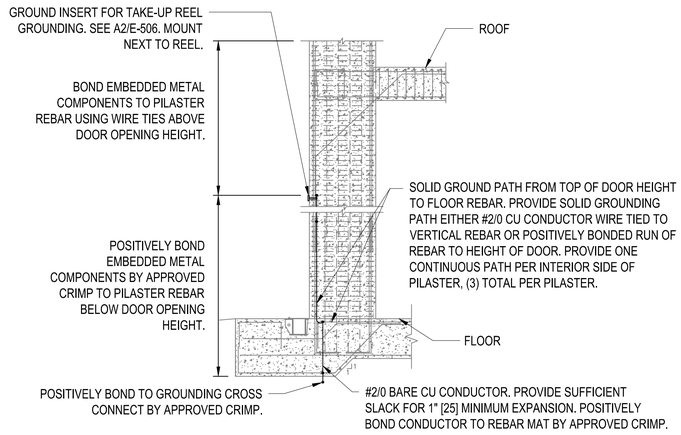

C1 PILASTER GROUNDING AND BONDING DETAIL

SCALE: NO SCALE

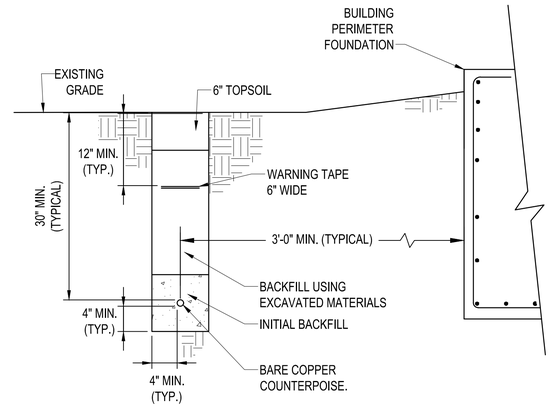

C3 TYPICAL GROUND RING INSTALLATION DETAIL

SCALE: NO SCALE

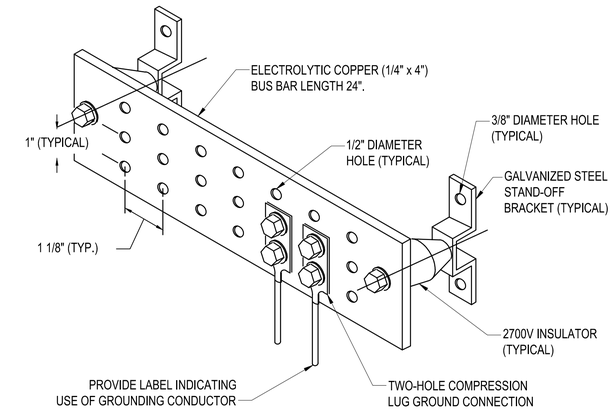

C4 SINGLE POINT GROUNDING BUS BAR (SPGB) DETAIL - TYPICAL

SCALE: NO SCALE

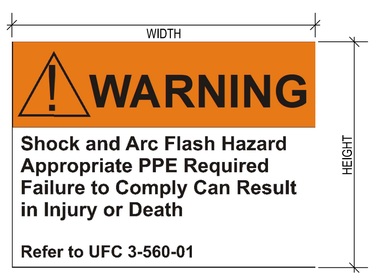

NOTES:

1. PROVIDE SELF-ADHESIVE VINYL LABEL TO AFFIX TO ELECTRICAL EQUIPMENT TO WARN OF ARC FLASH HAZARDS.
2. THE LABEL FORMAT AND TEXT CAN BE MODIFIED PROVIDED THAT THE INFORMATION REQUIRED BY UFC 3-501-01 IS INCLUDED.
3. THE LABEL MUST BE LOCATED ON THE EQUIPMENT TO BE CLEARLY VISIBLE TO QUALIFIED PERSONS BEFORE EXAMINATION, ADJUSTMENT, SERVICING, OR MAINTENANCE OF THE EQUIPMENT.
4. THE SIZE OF THE LABEL MUST BE MINIMUM:

EQUIPMENT TYPE	HEIGHT	WIDTH
INDOOR	2"	3"
OUTDOOR	3"	4.5"

5. A DOWNLOADABLE WINDOWS METAFILE IS AVAILABLE FROM LINK BELOW. TYPE IN THE FOLLOWING ADDRESS IN INTERNET EXPLORER:
http://www.wbdg.org/ccb/NAVGRAPH/arc_flash_warning_labels.zip
6. REFER TO UFC 3-560-01, SECTION 1-12 FOR ADDITIONAL ARC-FLASH LABELS INFORMATION AND REQUIREMENT. ADDITIONAL LABELS CAN BE FOUND WITHIN BASIS OF DESIGN, APPENDIX G - ARC FLASH LABELS

A1 ARC FLASH WARNING LABEL

SCALE: NO SCALE

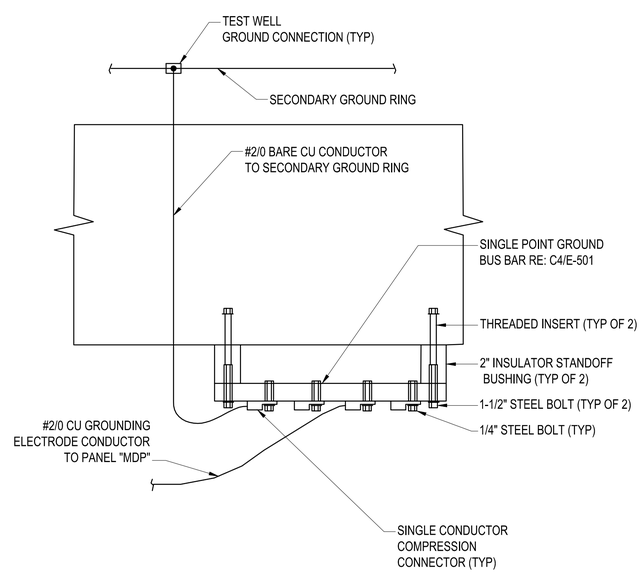

A3 SINGLE POINT GROUND BUS BAR DETAIL

SCALE: NO SCALE

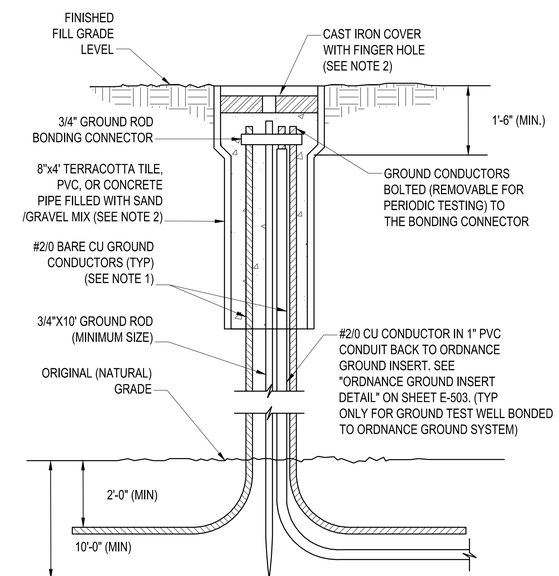

THE DEPTH OF GROUND ROD BELOW NATURAL GRADE MUST BE SITE ADAPTED TO SUIT LOCAL SOIL CONDITION. AT NO TIME MUST THE MINIMUM DEPTH BE LESS THAN 10'-0".

NOTE 1: MAINTAIN THE GROUND CONDUCTORS ISOLATED FROM THE GROUND ROD UNTIL THE BOND CONNECTION AT THE TOP

NOTE 2: PROVIDE "TRAFFIC RATED" TEST WELL AND COVER FOR PAVED AREAS

A4 GROUND TEST WELL INSTALLATION IN EARTH FILL

SCALE: NO SCALE

MARK	DESCRIPTION	DATE

SEAL

A/E INFO

APPROVED
FOR COMMANDER NAVFAC

ACTIVITY: Approved by LCDR VINCE DEL GRECO, ROICC with PWD YORKTOWN, via Email.
SATISFACTORY TO DATE 03/26/2026
DES CPO DRW CPO CHK JDU
PM/DM MME/WJW
BRANCH MANAGER WRB
CHIEF ENG/ARCH JWJ
FIRE PROTECTION HPN

DEPARTMENT OF THE NAVY
NAVAL FACILITIES ENGINEERING SYSTEMS COMMAND
MIDLANT PDC CORE
NAVAL FACILITIES ENGINEERING SYSTEMS COMMAND
NAVAL STATION NORFOLK, VIRGINIA
NAVAL WEAPONS STATION
YORKTOWN, VIRGINIA
P-171 WEAPONS MAGAZINES
ELECTRICAL DETAILS

SCALE: NONE
EPROJECT NO.: 1737010
CONSTR. CONTR. NO. ##
NAVFAC DRAWING NO. 12942023
SHEET 363 OF 499
E-501

DRAWFORM REVISION: 14 SEP 2023

FILE NAME: K:\AllYorktown\ME\CONX2024_1737010_P171_Weapons_Magazines\B_Design\DWGS - MAGAZINE\Sheet\13_ELEC\P171-1737010AAG2E-E-501.dwg LAYOUT NAME: E-501 ELECTRICAL DETAILS PLOTTED: Tuesday, March 31, 2026 - 7:06am USER: dayton.doreen

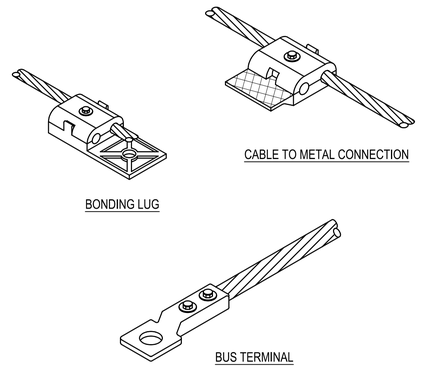

C2 TYPICAL CABLE TERMINATIONS / CONNECTIONS DETAIL

SCALE: NO SCALE

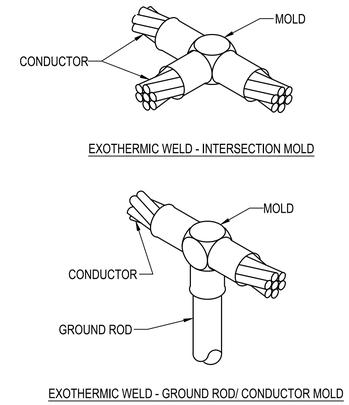

C3 TYPICAL CABLE EXOTHERMIC WELD DETAIL

SCALE: NO SCALE

NOTES:

1. PROVIDE EXOTHERMIC WELD OR HIGH COMPRESSION FOR LIGHTNING PROTECTION GROUNDING CONDUCTORS THAT ARE BURIED OR CONCEALED WITHIN STRUCTURE.
2. CABLE SPLICE OR OTHER BONDING CONNECTORS MUST BE INSTALLED PER MANUFACTURER REQUIREMENTS AND WITH AN APPROVED UL96 LISTING.

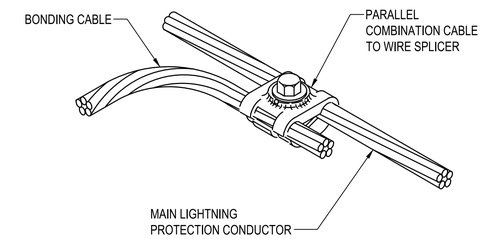

C4 TYPICAL CABLE SPLICE DETAIL

SCALE: NO SCALE

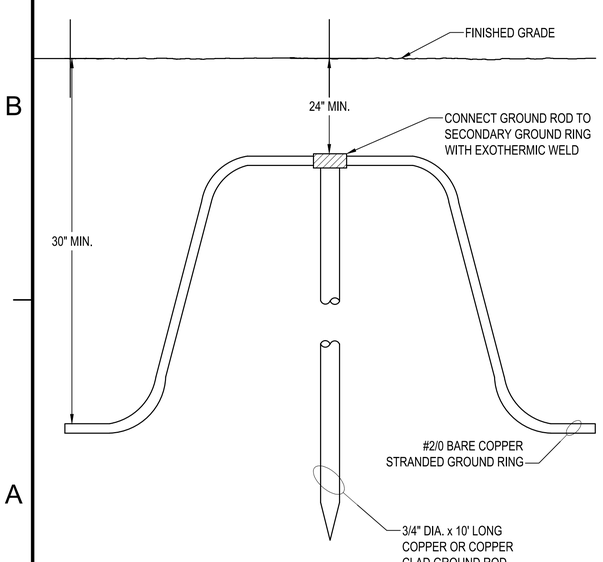

A1 GROUND ROD DETAIL

SCALE: NO SCALE

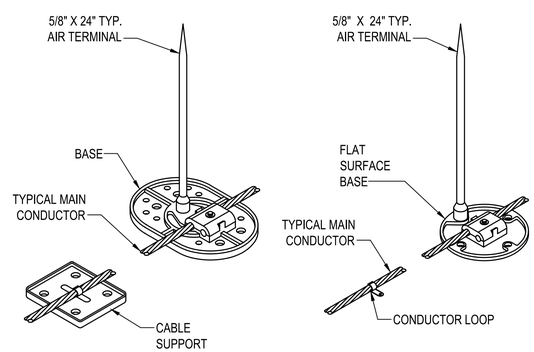

NOTES:

1. ADHESIVE FASTENERS ARE NOT PERMITTED ON DOWN CONDUCTORS AND CROSS CONDUCTORS.
2. BOLTED CONNECTORS ARE NOT PERMITTED ON DOWN CONDUCTOR OR ROOF CONDUCTORS BONDING, EXCEPT AT AIR TERMINAL OR ALUMINUM OR METAL BODIES FOR BONDING PURPOSES. PROVIDE EXOTHERMIC WELDING OR HIGH COMPRESSION ON THE DOWN CONDUCTORS AND ROOF CONDUCTORS.

A2 TYPICAL VENT MOUNTED AIR TERMINAL DETAIL

SCALE: NO SCALE

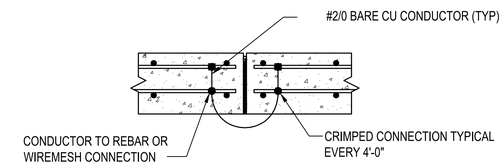

B4 TYPICAL BOND CONNECTION AT EACH CONSTRUCTION JOINT

SCALE: NO SCALE

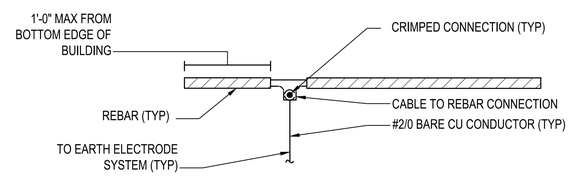

A4 GROUNDING REINFORCING STEEL

SCALE: NO SCALE

MARK	DESCRIPTION	DATE

SEAL

A/E INFO

APPROVED

FOR COMMANDER NAVFAC

ACTIVITY: Approved by LCDR VINCE DEL GRECO, ROICC with PWD YORKTOWN, via Email.

SATISFACTORY TO DATE 03/26/2026

DES CPO	DRW CPO	CHK JDU	
PM/DM	MME/WJW		
BRANCH MANAGER	WRB		
CHIEF ENG/ARCH	JWJ		
FIRE PROTECTION	HPN		

DEPARTMENT OF THE NAVY
NAVAL FACILITIES ENGINEERING SYSTEMS COMMAND
MIDLANT PDC CORE
NAVAL FACILITIES ENGINEERING SYSTEMS COMMAND
NAVAL STATION NORFOLK, VIRGINIA
NAVAL WEAPONS STATION
YORKTOWN, VIRGINIA
P-171 WEAPONS MAGAZINES
ELECTRICAL DETAILS

SCALE: NONE

EPROJECT NO.: 1737010

CONSTR. CONTR. NO. ##

NAVFAC DRAWING NO. 12942024

SHEET 364 OF 499

E-502

DRAWFORM REVISION: 14 SEP 2023

FILE NAME: K:\YorktownMILCON\2024_1737010_P171_Weapons_Magazines\B_Design\DWGS - MAGAZINE\Sheet\13_ELEC\P171-1737010AMAGZ-E-502.dwg LAYOUT NAME: E-502 ELECTRICAL DETAILS PLOTTED: Tuesday, March 31, 2026 - 7:00am USER: dayton.dohen

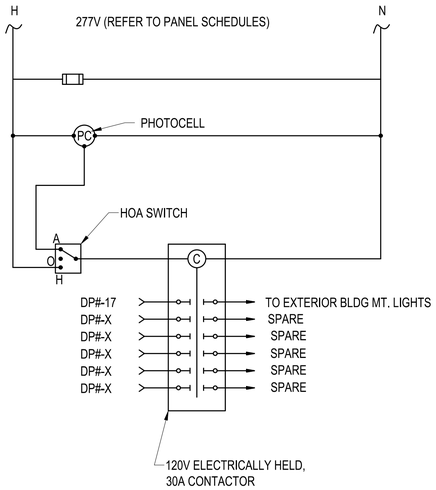

C1 TYPICAL LIGHTING CONTACTOR PANEL 'LCP#'

SCALE: NO SCALE

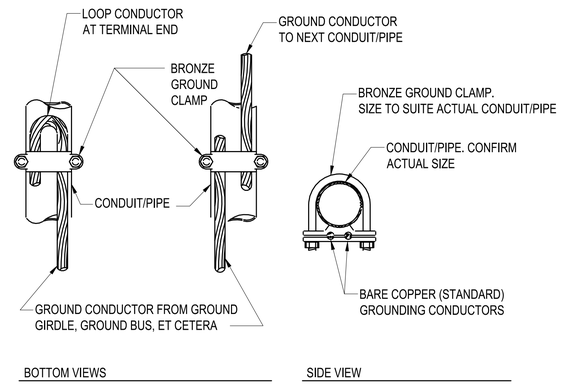

C2 CONDUIT/PIPE GROUND CONNECTION

SCALE: NO SCALE

NOTES:

1. CONCEAL GROUNDING CONDUCTORS WHERE POSSIBLE.
2. FOR GROUNDING CONDUCTORS RUN EXPOSED, SUPPORT CONDUCTORS 36" ON CENTERS AND WITHIN 12" OF GROUND CONNECTIONS.
3. PROVIDE WALL FASTENER IN ACCORDANCE WITH THE WALL TYPE SEE "SIDE VIEW DETAILS" FOR REQUIREMENTS.
4. THIS GROUNDING DETAIL IS NOT FOR ORDNANCE GROUNDING SYSTEM.

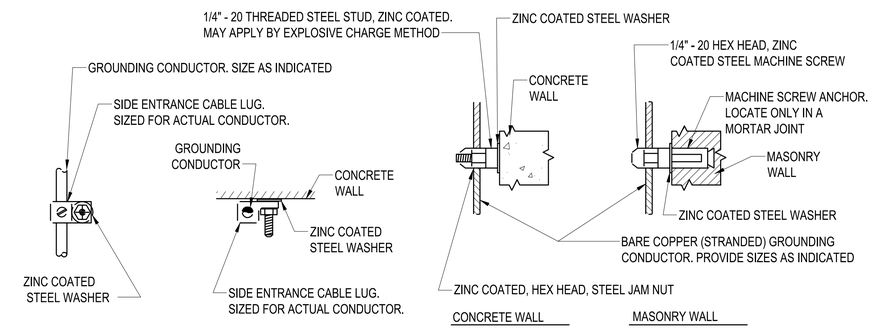

C4 GROUNDING CONDUCTOR SUPPORT DETAIL (TYPICAL FOR EXPOSED CONDUCTORS)

SCALE: NO SCALE

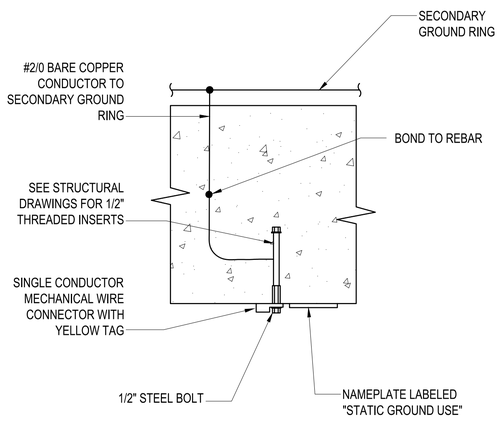

STATIC GROUND INSERT DETAIL NOTES:

1. PROVIDE A REMOVABLE YELLOW MELAMINE PLASTIC TAG THAT ATTACHES TO THE STATIC GROUND INSERT. THE TAG MUST INCLUDE THE FOLLOWING INFORMATION:

   "NOT IN SERVICE. NO MAINTENANCE REQUIRED.

   INSTALLATION MEETS STATIC/FACILITY GROUND REQUIREMENT PER NAVSEA OP-5. ACTIVITY MUST PERFORM TESTING PER NAVSEA OP-5 AND ENACT MAINTENANCE SCHEDULE WHEN THE STATIC/FACILITY GROUND INSERT IS PLACED IN SERVICE.

   RETAIN THIS TAG TO REATTACH WHEN REMOVED FROM SERVICE."

A1 STATIC GROUND INSERT DETAIL

SCALE: NO SCALE

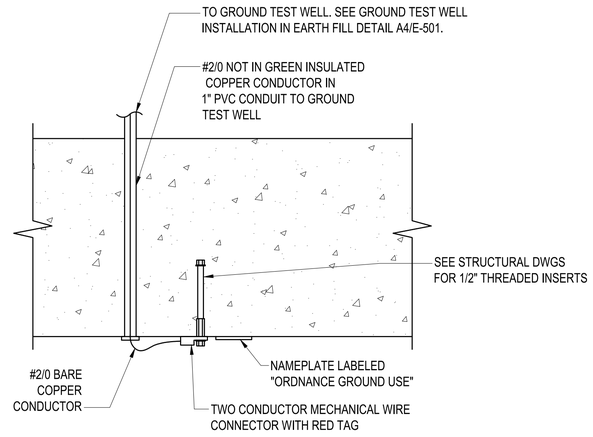

ORDNANCE GROUND INSERT DETAIL NOTES:

1. PROVIDE A REMOVABLE RED MELAMINE PLASTIC TAG THAT ATTACHES TO THE ORDNANCE GROUND INSERT. THE TAG MUST INCLUDE THE FOLLOWING INFORMATION:

   "NOT IN SERVICE. NO MAINTENANCE REQUIRED.

   INSTALLATION MEETS ORDNANCE GROUND REQUIREMENT PER NAVSEA OP-5. ACTIVITY MUST PERFORM TESTING PER NAVSEA OP-5 AND ENACT MAINTENANCE SCHEDULE WHEN THE ORDNANCE GROUND INSERT IS PLACED IN SERVICE.

   RETAIN THIS TAG TO REATTACH WHEN REMOVED FROM SERVICE."

2. MAINTAIN THREADED INSERT ISOLATION. DO NOT ALLOW THE THREADED INSERT TO TOUCH REBAR OR OTHER METALLIC OBJECTS IN THE WALL.

A2 ORDNANCE GROUND INSERT DETAIL

SCALE: NO SCALE

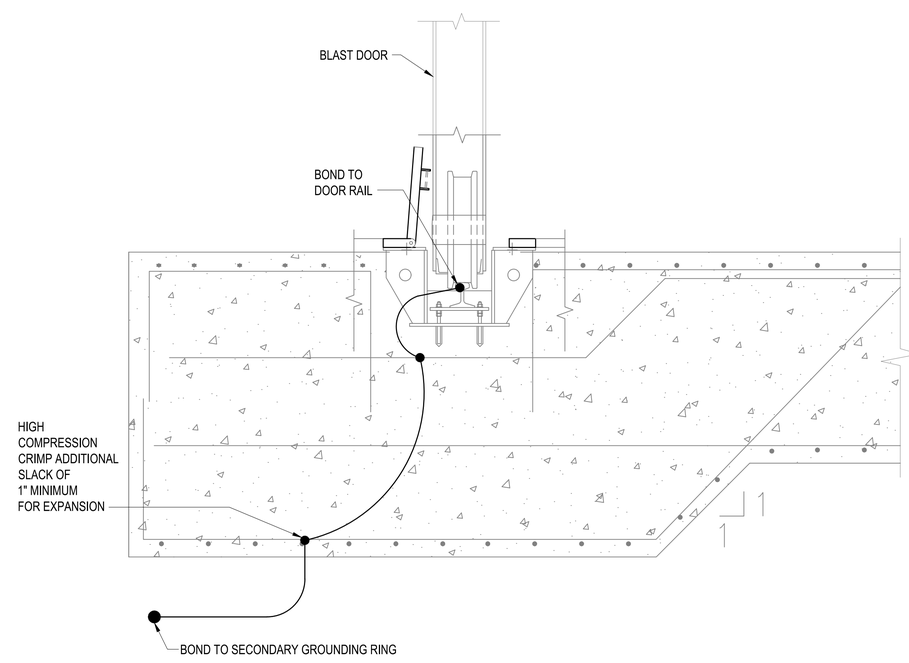

A4 DOOR RAIL BONDING DETAIL (TYPICAL)

SCALE: NO SCALE

MARK	DESCRIPTION	DATE

SEAL

A/E INFO

APPROVED

FOR COMMANDER NAVFAC

ACTIVITY: Approved by LCDR VINCE DEL GRECO, ROICC with PWD YORKTOWN, via Email.

SATISFACTORY TO DATE 03/26/2026

DES	CPO	DRW	CPO	CHK	JDU

PM/DM	MME/WJW
BRANCH MANAGER	WRB
CHIEF ENG/ARCH	JWJ
FIRE PROTECTION	HPN

DEPARTMENT OF THE NAVY
NAVAL FACILITIES ENGINEERING SYSTEMS COMMAND
MIDLANT PDC CORE

NAVAL FACILITIES ENGINEERING SYSTEMS COMMAND
NAVAL STATION NORFOLK, VIRGINIA

NAVAL WEAPONS STATION YORKTOWN, VIRGINIA

P-171 WEAPONS MAGAZINES

ELECTRICAL DETAILS

SCALE:	NONE
EPROJECT NO.:	1737010
CONSTR. CONTR. NO.	##
NAVFAC DRAWING NO.	12942025
SHEET	365 OF 499

E-503

DRAWFORM REVISION: 14 SEP 2023

FILE NAME: K:\IA\Yorktown\MLCON\2024_1737010_P171_Weapons_Magazines\B_Design\DWGS - MAGAZINES\Sheet\13_ELEC\P171-1737010-MAG2-E-503.dwg LAYOUT NAME: E-503 ELECTRICAL DETAILS PLOTTED: Tuesday, March 31, 2026 - 7:00am USER: dayton.dohren

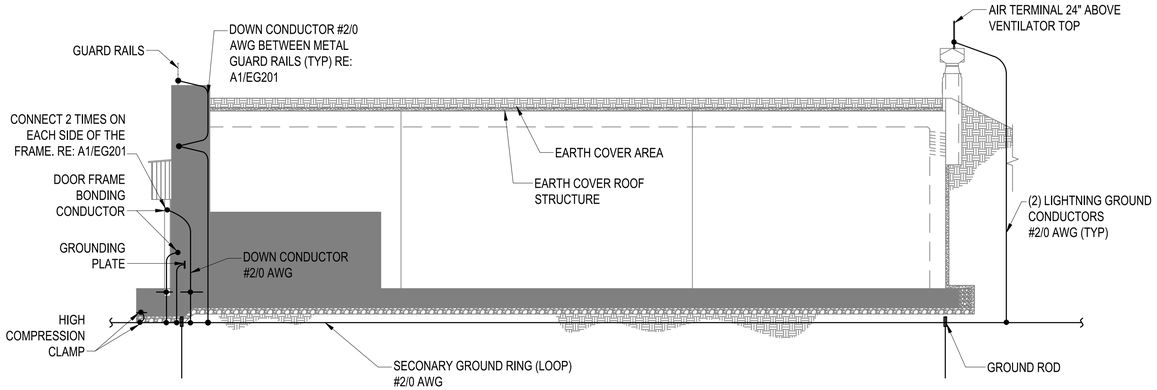

NOTES:
1. FOR MISCELLANEOUS STEEL SHAPES, BOLTED CONNECTOR MAY BE USED.
2. CRIMPED CONNECTORS MAY ALSO BE ANOTHER ALTERNATE CONNECTORS.

C1 ECM GROUND SECTION (TYPICAL)
SCALE: NO SCALE

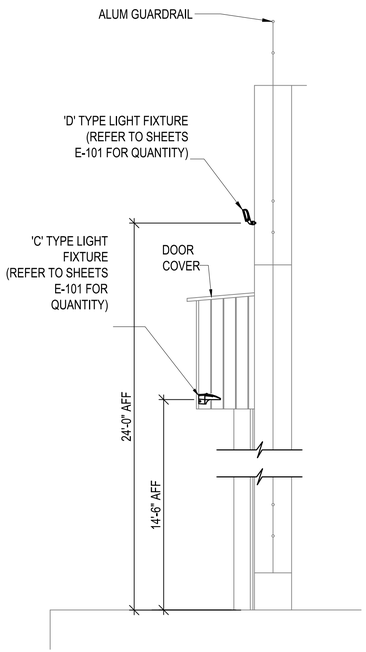

C4 EXTERIOR WALL MOUNTED LIGHTING
SCALE: NO SCALE

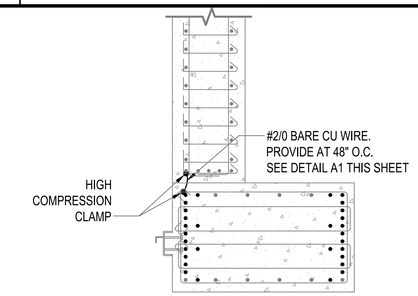

D5 HEADER BEAM END - BONDING DETAIL
SCALE: NO SCALE

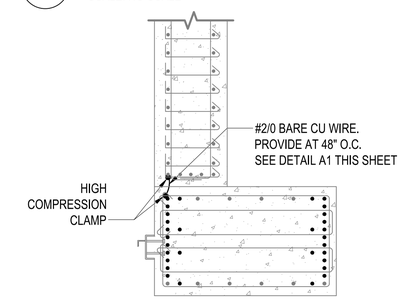

C5 HEADER BEAM MIDSPAN - BONDING DETAIL
SCALE: NO SCALE

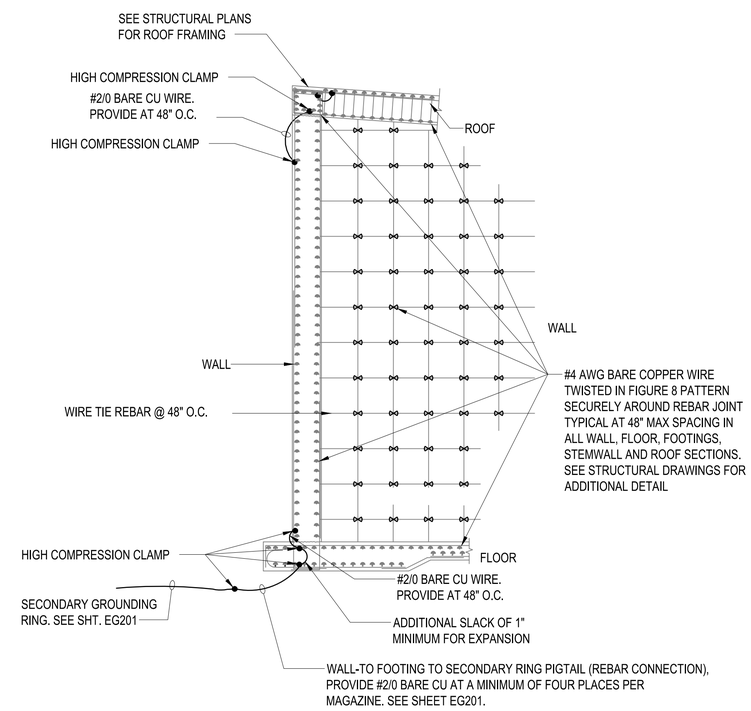

A1 WALL/FLOOR/ROOF BONDING DETAIL (TYPICAL)
SCALE: NO SCALE

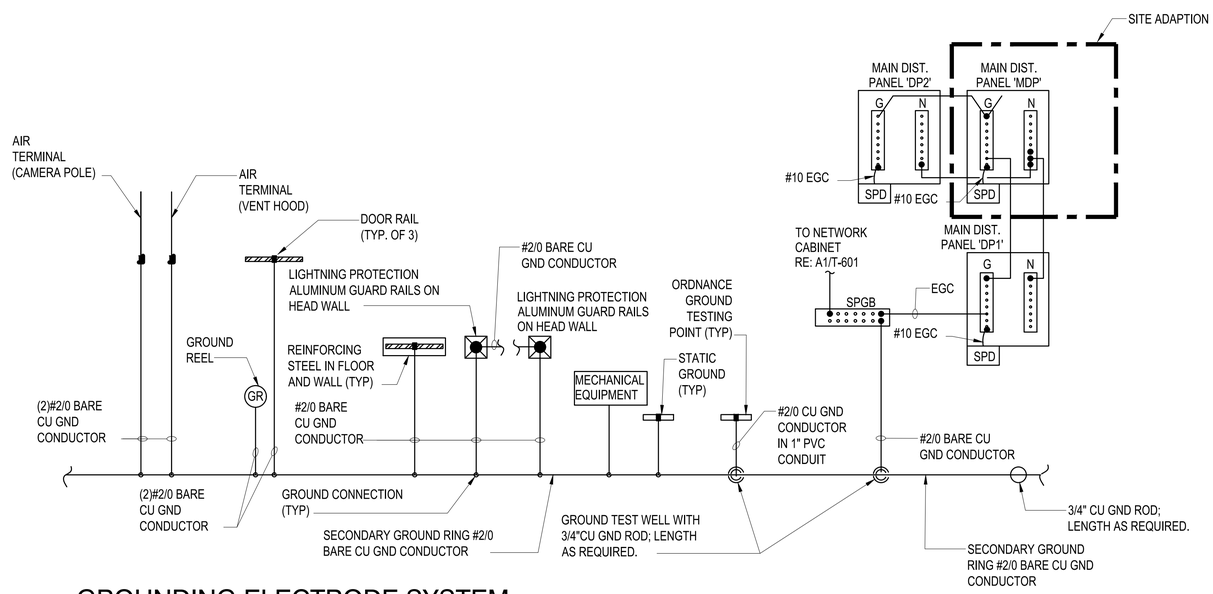

A3 GROUNDING ELECTRODE SYSTEM (TYPICAL FOR EACH MAGAZINE)
SCALE: NO SCALE

MARK	DESCRIPTION	DATE

NAVFAC

SEAL

A/E INFO

APPROVED
James E. Donahue, R.A.
FOR COMMANDER NAVFAC 4/22/2026

ACTIVITY
Approved by LCDR VINCE DEL GRECO, ROICC with PWD YORKTOWN, via Email.
SATISFACTORY TO DATE 03/26/2026

DES	CPO	DRW CPO	CHK JDU
PM/DM	MME/WJW		
BRANCH MANAGER	WRB		
CHIEF ENG/ARCH	JWJ		
FIRE PROTECTION	HPN		

DEPARTMENT OF THE NAVY
NAVAL FACILITIES ENGINEERING SYSTEMS COMMAND
MIDLANT PDC CORE
NAVAL FACILITIES ENGINEERING SYSTEMS COMMAND
NAVAL STATION NORFOLK, VIRGINIA
NAVAL WEAPONS STATION
YORKTOWN, VIRGINIA
P-171 WEAPONS MAGAZINES
ELECTRICAL DETAILS

SCALE: NONE
EPROJECT NO.: 1737010
CONSTR. CONTR. NO. ##
NAVFAC DRAWING NO. 12942026
SHEET 366 OF 499

E-504

DRAWFORM REVISION: 14 SEP 2023

FILE NAME: K:\IA\Yorktown\MLCON\2024_1737010_P171_Weapons_Magazines\B_Design\DWGS - MAGAZINE\Sheet\13_ELEC\P171-1737010-MAGZ-E-504.dwg LAYOUT NAME: E-504 ELECTRICAL DETAILS PLOTTED: Tuesday, March 31, 2026 - 7:00am USER: dayton.dohlen

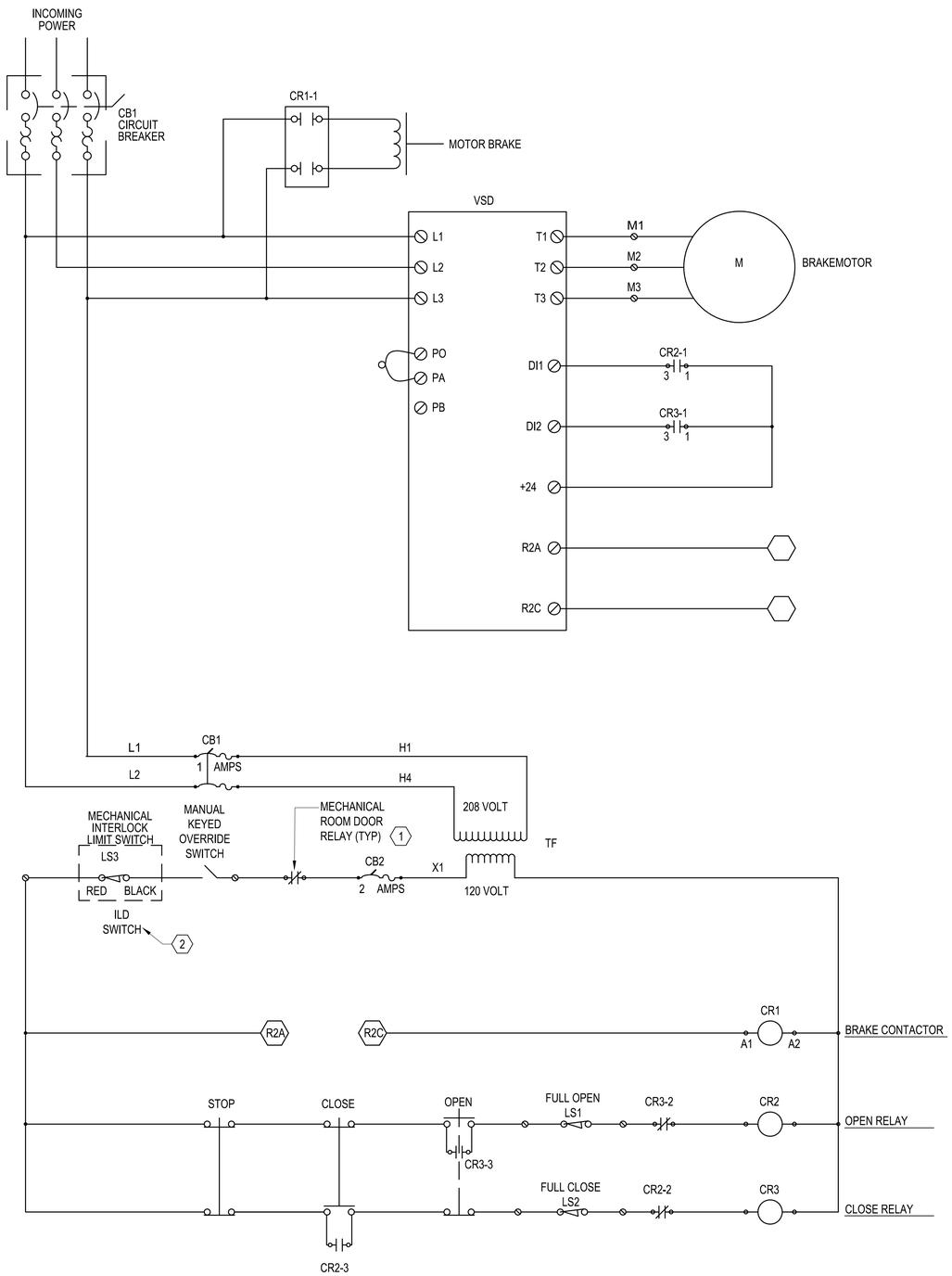

ITEM	DESCRIPTION
ENCLOSURE	NEMA 4/12 ENCLOSURE
VSD	VARIABLE SPEED DRIVE - 2HP
TF	208 X 120 TRANSFORMER
CR1	5 POLE CONTROL RELAY
CR2, CR3	DPDT RELAY
CB1	2P 1AMP CIRCUIT BREAKER
CB2	1P 2AMP CIRCUIT BREAKER
LS1,LS2	LIMIT SWITCHES
EXT. ENCLOSURE	NEMA 4/12 ENCLOSURE
EXT. OPEN PB	OPEN LEGEND
EXT. CLOSE PB	CLOSE LEGEND
LS3	LIMIT SWITCHES LOCATED INSIDE ILD BOLTWORKS

A1 DOOR CONTROL DIAGRAM

SCALE: NO SCALE

GENERAL SHEET NOTES

1. THE DOOR CONTROL DIAGRAM IS A TYPICAL DOOR STANDARD DESIGN AND SHOWN AS SCHEMATIC DESIGN ONLY. DOR MUST COORDINATE WITH DOOR MANUFACTURER FOR SPECIFIC DESIGN APPLICABLE TO LOCAL CODES AND ORDINANCES.
2. PROVIDE A MINIMUM NEMA 3R ENCLOSURE FOR ALL ELECTRICAL EQUIPMENT LOCATED OUTDOORS. FOR WET/CORROSION ENVIRONMENT AREA AS DEFINED PER UFC 1-200-01, CHAPTER 4 CORROSION PROTECTION AND CONTROL AND APPENDIX A, DOR MUST SPECIFY CORROSION PROTECTION FOR ENCLOSURES AS DEFINED PER CODE.
3. THIS DETAIL REPRESENTS TO CONTROL EACH DOOR AS INDEPENDENTLY.
4. PROVIDE DISCONNECT FOR DOOR OPERATOR PER MANUFACTURER'S RECOMMENDATIONS.

KEYNOTES

1. THE RELAY WILL BE INTERLOCKED TO CLOSE MECHANICAL DOOR LATCH. RELAY MUST OPEN WHEN MECHANICAL DOOR IS UNLOCKED. DOOR POWER MUST BE DISCONNECTED AND RELEASED THE DOOR CONTROL POWER. THE KEY OVERRIDE SWITCH MUST CONTROL WHEN DOOR POWER DISCONNECTED.
2. THE RELAY WILL BE INTERLOCKED WITH ILD LOCKING SYSTEM SO THAT DOOR POWER WILL BE DISCONNECTED WHEN ILD IS IN 'CLOSE' POSITION OR IN 'LOCKING' POSITION. DESIGN TEAM WILL COORDINATE WITH LOCAL AHJ FOR ADDITIONAL REQUIREMENT ON ILD SYSTEM CONNECTION. REFER TO KEYED NOTE 2/T101 FOR ADDITIONAL INFORMATION.

MARK | DESCRIPTION | DATE

SEAL

A/E INFO

APPROVED

FOR COMMANDER NAVFAC

ACTIVITY: Approved by LCDR VINCE DEL GRECO, ROICC with PWD YORKTOWN, via Email.

SATISFACTORY TO DATE 03/26/2026

DES CPO | DRW CPO | CHK JDU

PM/DM MME/WJW

BRANCH MANAGER WRB

CHIEF ENG/ARCH JWJ

FIRE PROTECTION HPN

DEPARTMENT OF THE NAVY
NAVAL FACILITIES ENGINEERING SYSTEMS COMMAND
MIDLANT PDC CORE
NAVAL FACILITIES ENGINEERING SYSTEMS COMMAND
NAVAL STATION NORFOLK, VIRGINIA
NAVAL WEAPONS STATION
YORKTOWN, VIRGINIA
P-171 WEAPONS MAGAZINES
ELECTRICAL DETAILS

SCALE: NONE

EPROJECT NO.: 1737010

CONSTR. CONTR. NO. ##

NAVFAC DRAWING NO. 12942027

SHEET 367 OF 499

E-505

DRAWFORM REVISION: 14 SEP 2023

FILE NAME: K:\YORKTOWN\MILCON\2024_1737010_P171_Weapons_Magazines\B_Design\DWGS - MAGAZINE\Sheet13_ELEC\P171-1737010-MAG2E-E-505.dwg LAYOUT NAME: E-505 ELECTRICAL DETAILS PLOTTED: Tuesday, March 31, 2026 - 7:00am USER: dayton.dohren

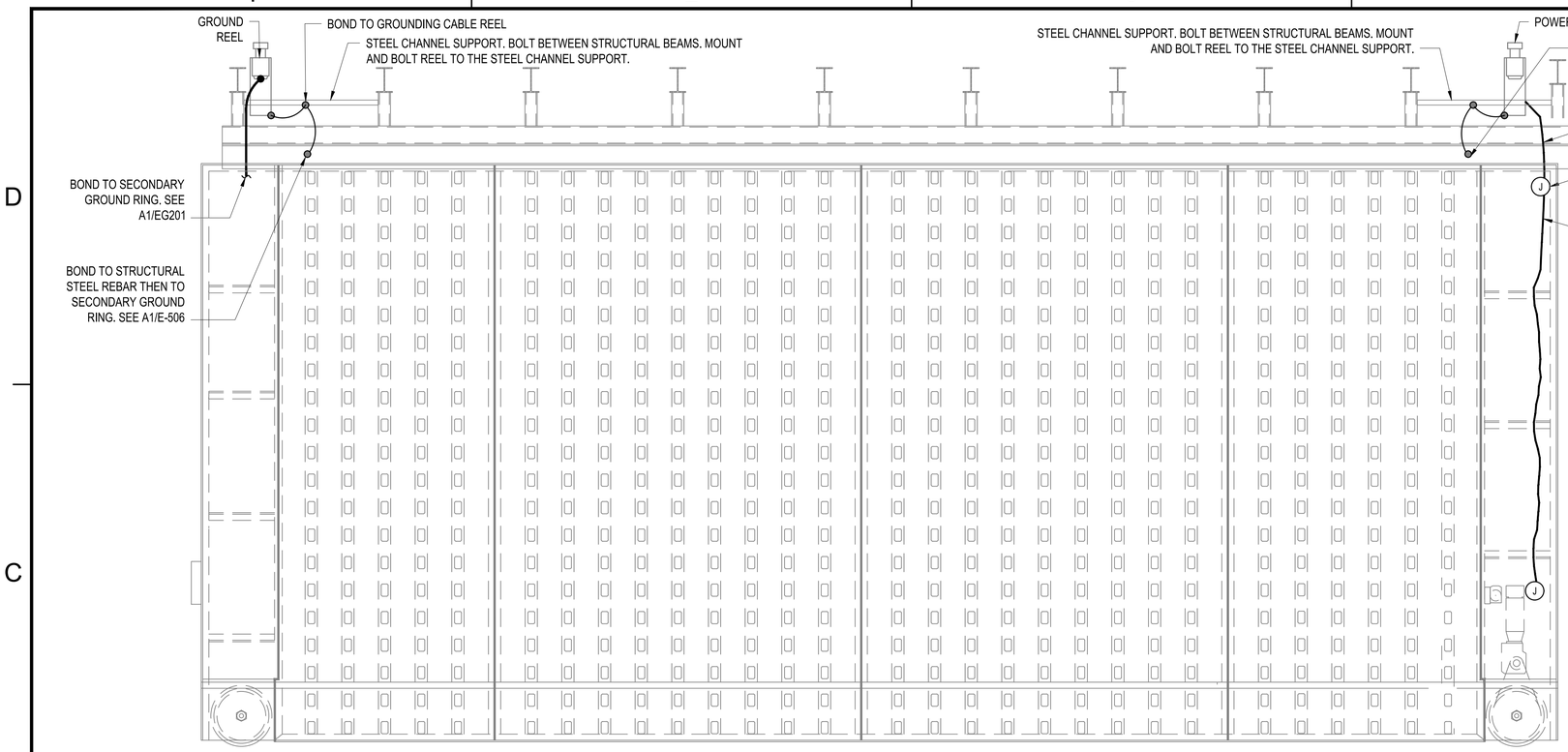

B1 DOOR EXTERIOR PLATE ELEVATION
SCALE: 1" = 1'-0"

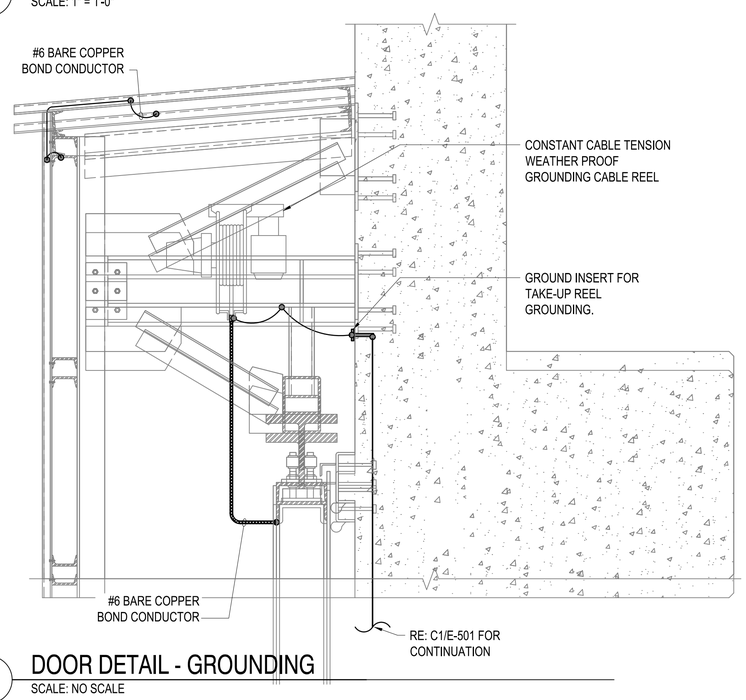

A1 DOOR DETAIL - GROUNDING
SCALE: NO SCALE

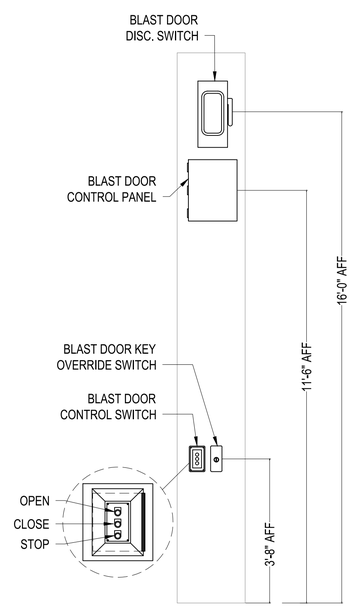

A3 DOOR CONTROL RISER
SCALE: NO SCALE

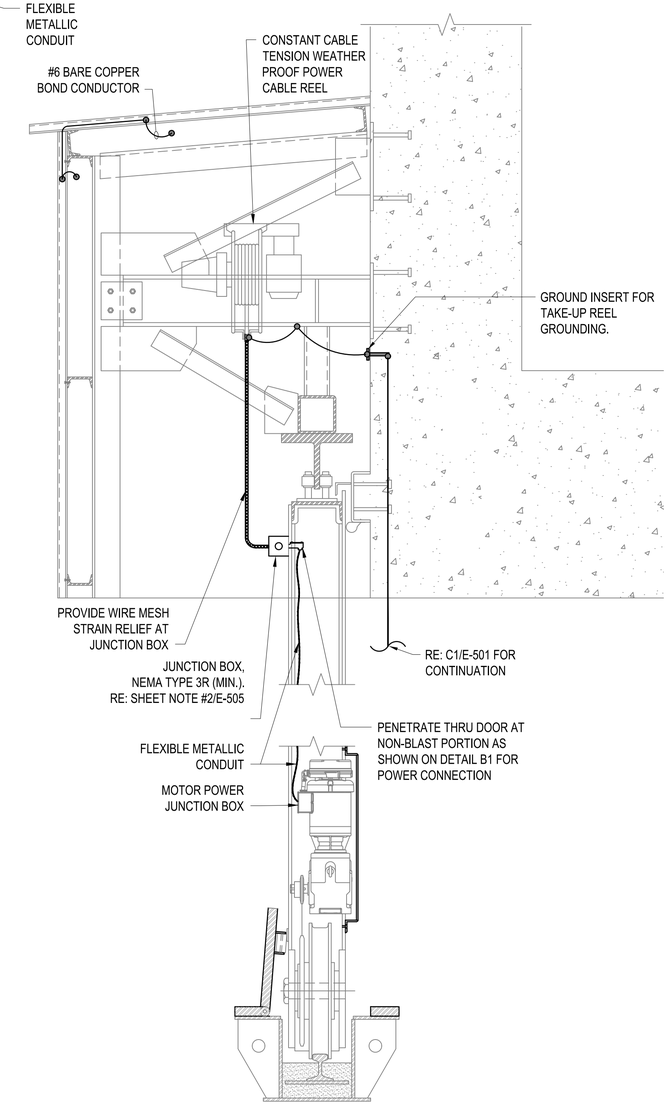

A4 DOOR DETAIL - POWER
SCALE: NO SCALE

GRAPHIC SCALE(S)
1"=1'-0" 0' 1/2' 1' 2'

MARK	DESCRIPTION	DATE

SEAL

A/E INFO

APPROVED
Michael T. Crosby, III, P.E.
FOR COMMANDER NAVFAC

ACTIVITY
Approved by LCDR VINCE DEL GRECO, ROICC with PWD YORKTOWN, via Email.
SATISFACTORY TO DATE 03/26/2026

DES	CPO	DRW CPO	CHK JDU
PM/DM	MME/WJW		
BRANCH MANAGER	WRB		
CHIEF ENG/ARCH	JWJ		
FIRE PROTECTION	HPN		

DEPARTMENT OF THE NAVY
NAVAL FACILITIES ENGINEERING SYSTEMS COMMAND
MIDLANT PDC CORE
NAVAL FACILITIES ENGINEERING SYSTEMS COMMAND
NAVAL STATION NORFOLK, VIRGINIA
NAVAL WEAPONS STATION
YORKTOWN, VIRGINIA
P-171 WEAPONS MAGAZINES
ELECTRICAL DETAILS

SCALE: AS SHOWN
EPROJECT NO.: 1737010
CONSTR. CONTR. NO. ##
NAVFAC DRAWING NO. 12942028
SHEET 368 OF 499
E-506

DRAWFORM REVISION: 14 SEP 2023

FILE NAME: K:\VA\Yorktown\MILCON\2024_1737010_P171_Weapons_Magazines\B_Design\DWGS - MAGAZINE\Sheet\13_ELEC\P171-1737010-M4A2E-506.dwg LAYOUT NAME: E-506 ELECTRICAL DETAILS PLOTTED: Tuesday, March 31, 2026 - 7:00am USER: dayton.obrien

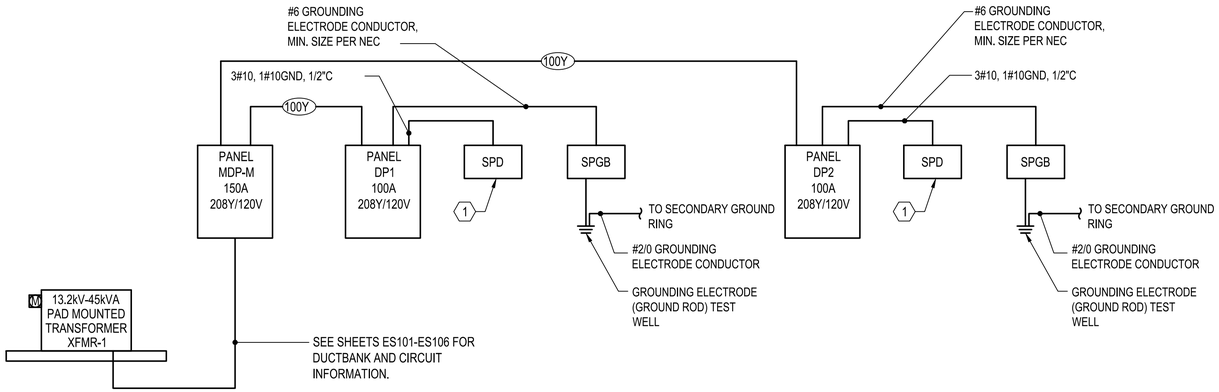

C1 ENLARGED CLWS-2 BAY MAGAZINES RISER AND GROUNDING DIAGRAM - TYPICAL

SCALE: NOT TO SCALE

208Y/120V FEEDER SCHEDULE

FEEDER ID	SETS	PHASE	NEUTRAL	GND	CONDUIT	REMARKS
100	1	3#1	1#1	#6 GND	1-1/2"	PROVIDE COPPER FEEDERS

NOTES:

1. CONDUCTORS AND POWER CABLING MUST BE RUN IN RGS CONDUIT FOR A MINIMUM OF 50'-0" BEFORE ENTERING ECM. PROVIDE THREADED PVC TO RGS ADAPTER FOR TRANSITION WHERE REQUIRED. PROVIDE CONCRETE ENCASEMENT FOR RGS CONDUIT.

KEYNOTES

1. PROVIDE IN NEMA 1 ENCLOSURE. LOCATE WITHIN 6" OF PANELBOARD.

MARK	DESCRIPTION	DATE

SEAL

A/E INFO

APPROVED

FOR COMMANDER NAVFAC

ACTIVITY
Approved by LCDR VINCE DEL GRECO, ROICC with PWD YORKTOWN, via Email.

SATISFACTORY TO DATE 03/26/2026

DES CPO DRW CPO CHK JDU

PM/DM MME/WJW

BRANCH MANAGER WRB

CHIEF ENG/ARCH JWJ

FIRE PROTECTION HPN

DEPARTMENT OF THE NAVY
NAVAL FACILITIES ENGINEERING SYSTEMS COMMAND
MIDLANT PDC CORE

NAVAL FACILITIES ENGINEERING SYSTEMS COMMAND
NAVAL STATION NORFOLK, VIRGINIA

NAVAL WEAPONS STATION
YORKTOWN, VIRGINIA

P-171 WEAPONS MAGAZINES

ELECTRICAL ONE-LINE

SCALE: NONE

EPROJECT NO.: 1737010

CONSTR. CONTR. NO. ##

NAVFAC DRAWING NO. 12942029

SHEET 369 OF 499

E-601

DRAWFORM REVISION: 14 SEP 2023

FILE NAME: K:\NAVYyorktown\MILCON\2024_1737010_P171_Weapons_Magazines\B_Design\DWGS - MAGAZINE\Sheet13_ELEC\P171-1737010-MAGZE-601.dwg LAYOUT NAME: E-601 ELECTRICAL ONE-LINE PLOTTED: Tuesday, March 31, 2026 - 7:00am USER: dayton.ochien

LIGHTING FIXTURE SCHEDULE

MARK	DESCRIPTION	MOUNTING TYPE/HEIGHT (RE: E-101)	LAMP TYPE	INPUT VA	COLOR TEMPERATURE	CRI	VOLTAGE	LUMINAIRE PLATE NUMBER
A	LED FROSTED POLYCARBONATE ENCLOSURE 15000LM	STEM	LED	116 VA	3500 K	80	MVOLT	NL-11
B	LED FROSTED POLYCARBONATE ENCLOSURE 6000LM	SURFACE	LED	50 VA	3500 K	80	MVOLT	NL-11
C	LED WALL FIXTURE TWO-PIECE DIE-CAST ALUMINUM HOUSING 7000LM	SURFACE	LED	40 VA	3000 K	70	MVOLT	XL-17
D	LED FLOOD LIGHT DIE-CAST ALUMINUM HOUSING 12000LM	WALL	LED	102 VA	3000 K	70	MVOLT	XL-21

LUMINAIRE REQUIREMENTS:

1. HOUSING - FIBERGLASS OR FIBERGLASS-REINFORCED POLYESTER OUTER HOUSING, WITH ALUMINUM COMPONENT TRAY AND HEAT SINK. OPTIONAL LENGTHS OF 4FT OR 8FT.
2. LENS - IMPACT-RESISTANT ACRYLIC OR OPTIONAL POLYCARBONATE, WITH CONTINUOUS CLOSED-CELL POLYURETHANE GASKET, SECURED WITH STAINLESS STEEL OR POLYCARBONATE LATCHES.
3. LIGHT SOURCE - SOLID STATE LEDS WITH MINIMUM 50K HOURS RATED LIFE AT L70, 3500K CCT UON, MINIMUM 80 CRI, MAXIMUM 4-STEP MCADAM ELLIPSE BINNING TOLERANCE FOR COLOR CONSISTENCY, AND MINIMUM EFFICACY OF 100 LUMENS/WATT. INITIAL LUMEN OUTPUT AS INDICATED IN LUMINAIRE SCHEDULE.
4. DRIVER - REPLACEABLE, INTEGRAL, HIGH-EFFICIENCY DRIVER WITH MINIMUM 0.9 PF, OPERATING VOLTAGE OF 120-277V, THERMAL MANAGEMENT, < 20% TOTAL HARMONIC DISTORTION. ON-OFF CONTROL, STEP-DIMMABLE OR FULLY DIMMABLE AS INDICATED.
5. CERTIFICATION - UL 1598, WET LOCATION (IP65, IP66, IP67), DLC QUALIFIED, AND ROHS COMPLIANT. COMPLIES WITH LM79, LM80 AND TM21 TESTING STANDARDS. UL 924 WHEN EQUIPPED WITH EMERGENCY BATTERY BACK-UP.
6. MOUNTING - SURFACE-MOUNTED OR SUSPENDED FROM CEILING.
7. OPTIONS - EMERGENCY BACK-UP.
8. THIS SKETCH IS A NON-PROPRIETARY GRAPHIC REPRESENTATION OF A LUMINAIRE THAT MAY MEET THE SPECIFICATION REQUIREMENTS. IT IS NOT INTENDED TO INDICATE A CERTAIN MANUFACTURER OR PREFERENCE.

LED ENCLOSED AND GASKETED

REVISED: APRIL 2016 | LIGHTING PLATE: NL-11

LUMINAIRE REQUIREMENTS:

1. HOUSING - DIE-CAST OR EXTRUDED ALUMINUM WITH INTEGRAL PASSIVE COOLING MECHANISM. HEAT SINK MUST BE INCORPORATED DIRECTLY INTO HOUSING OR DRIVER COMPARTMENT TO ENSURE MAXIMUM HEAT TRANSFER AND DISSIPATION.
2. FINISH - MULTI-STAGE PRE-TREATMENT, FINISHED WITH BAKED-ON POLYESTER POWDER COAT. FINISH MUST PASS 2500 HOUR SALT SPRAY TEST PER ASTM B117. STANDARD FINISH IS DARK BRONZE, WITH OTHER CUSTOM COLORS AVAILABLE.
3. POWER SUPPLY/LED DRIVER - CLASS 1 DRIVER MUST OPERATE AT 120/277 VOLTS, 50/60 HZ, WITH OTHER VOLTAGES OPTIONAL; POWER FACTOR GREATER THAN 0.9 AND THD LESS THAN 20% AT FULL LOAD. MINIMUM EFFICACY MUST BE 60 LM/W AT MAXIMUM 600mA OPERATING CURRENT.
4. LED OPTICAL ASSEMBLY - PRECISION MOLDED ACRYLIC LENS PROVIDED FOR MULTIPLE HIGH-POWERED LEDS PRODUCING NEMA TYPE III DISTRIBUTION OR AS OTHERWISE INDICATED. BUG UPLIGHT RATING OF U0, WITH GLARE RATING AS DETERMINED BY LIGHTING ZONE INSTALLED. MINIMUM COLOR RENDERING INDEX (CRI) MUST BE 70 FOR CORRELATED COLOR TEMPERATURE (CCT) OF 4000-4500 DEGREES K.
5. CERTIFICATION - UL AND/OR ETL LISTED FOR DAMP OR WET LOCATIONS AS INDICATED, AND RoHS COMPLIANT.
6. OPTIONS - VARIOUS LUMEN OUTPUT RATING AS INDICATED, AND 0-10 VOLT DIMMING DRIVER.
7. OTHER - THE ABOVE SKETCH IS A NON-PROPRIETY GRAPHIC REPRESENTATION OF A LUMINAIRE THAT MAY MEET THE SPECIFICATION REQUIREMENTS AND IS NOT INTENDED TO INDICATE A CERTAIN MANUFACTURER'S PREFERENCE. ALL DIMENSIONS ARE NOMINAL AND VARY PER MANUFACTURER. MANUFACTURER'S PREFERENCE. ALL DIMENSIONS ARE NOMINAL AND VARY PER MANUFACTURER.

LED WALL PACK

REVISED: MARCH 2013 | LUMINAIRE PLATE: XL-17

LUMINAIRE REQUIREMENTS:

1. HOUSING - DIE CAST ALUMINUM WITH INTEGRAL PASSIVE COOLING MECHANISM. HEAT SINK MUST BE INCORPORATED DIRECTLY INTO HOUSING TO ENSURE MAXIMUM HEAT TRANSFER AND DISSIPATION.
2. FINISH - MULTI-STAGE PRE-TREATMENT, FINISHED WITH BAKED-ON POLYESTER POWDER COAT. FINISH MUST PASS 2500 HOUR SALT SPRAY TEST PER ASTM B117. DARK BRONZE FINISH COLOR IS STANDARD.
3. POWER SUPPLY/LED DRIVER - CLASS 1 ELECTRONIC DRIVER MUST OPERATE AT 120/277 VOLTS, 50/60 HZ, WITH OTHER VOLTAGES OPTIONAL. POWER FACTOR MUST BE GREATER THAN 0.9 AND THD LESS THAN 20% AT FULL LOAD. MINIMUM EFFICACY MUST BE 60 LM/W AT MAXIMUM 600mA OPERATING CURRENT.
4. LED OPTICAL ASSEMBLY - MULTI-LED ARRAY OPTIMIZED FOR SPECIFIC DISTRIBUTION PATTERN AS INDICATED. MINIMUM COLOR RENDERING INDEX (CRI) OF 70 FOR CORRELEATED COLOR TEMPERATURE OF 4000-4500 DEGREES K.
5. LENS - TEMPERED GLASS IN DIE-CAST ALUMINUM FRAME WITH SILICONE GASKET.
6. SURGE PROTECTION - 6 KV MINIMUM, COMPLIANT WITH ANSI C62.41.2.
7. CERTIFICATION - UL AND/OR ETL LISTED FOR WET LOCATIONS AND 2G VIBRATION STANDARD PER ANSI C136.32. OPTICAL ASSEMBLY MUST BE MINIMUM IP65 PER ANSI/IEC 60529.
8. OPTIONS - FINISH COLOR, OUTPUT DISTRIBUTION TYPE AND TRUNNION OR SLIPFITTER TYPE MOUNTING.
9. OTHER - THE ABOVE SKETCH IS A NON-PROPRIETARY GRAPHIC REPRESENTATION OF A LUMINAIRE THAT MAY MEET THE SPECIFICATION REQUIREMENTS AND IS NOT INTENDED TO INDICATE A CERTAIN MANUFACTURER'S PREFERENCE. ALL DIMENSIONS ARE NOMINAL AND VARY PER MANUFACTURER.

LED FLOOD LUMINAIRE

REVISED: MARCH 2013 | LUMINAIRE PLATE: XL-21

MARK	DESCRIPTION	DATE

NAVFAC

SEAL

A/E INFO

APPROVED

FOR COMMANDER NAVFAC

ACTIVITY: Approved by LCDR VINCE DEL GRECO, ROICC with PWD YORKTOWN, via Email.

SATISFACTORY TO DATE 03/26/2026

DES CPO | DRW CPO | CHK JDU

PM/DM MME/WJW

BRANCH MANAGER WRB

CHIEF ENG/ARCH JWJ

FIRE PROTECTION HPN

DEPARTMENT OF THE NAVY
NAVAL FACILITIES ENGINEERING SYSTEMS COMMAND
MIDLANT PDC CORE

NAVAL FACILITIES ENGINEERING SYSTEMS COMMAND
NAVAL STATION NORFOLK, VIRGINIA

NAVAL WEAPONS STATION
YORKTOWN, VIRGINIA

P-171 WEAPONS MAGAZINES

ELECTRICAL SCHEDULES

SCALE: NONE

EPROJECT NO.: 1737010

CONSTR. CONTR. NO. ##

NAVFAC DRAWING NO. 12942030

SHEET 370 OF 499

E-602

DRAWFORM REVISION: 14 SEP 2023

FILE NAME: K:\WX\Windows\MILCON\2024_1737010_P171_Weapons_Magazines\B_Design\DWGS - MAGAZINE\Sheet\13_ELEC\P171-1737010-MAGZ-E-602.dwg LAYOUT NAME: E-602 ELECTRICAL SCHEDULES PLOTTED: Tuesday, March 31, 2026 - 7:00am USER: clayton.oberlen

PANELBOARD MDP-M SCHEDULE

SE RATED

150 AMP BUS | 150 AMP MCB | 208Y/120 VOLTS | 3 PH, 4 W, SN, MINIMUM | 10 KAIC | SURFACE MOUNTED

LOAD SERVED	LOAD AMPS A	LOAD AMPS B	LOAD AMPS C	BKR TRIP	WIRE SIZE	CKT NO.	PHASE A B C	CKT NO.	WIRE SIZE	BKR TRIP	LOAD AMPS A	LOAD AMPS B	LOAD AMPS C	LOAD SERVED
PANEL DP1	34.2			100	1	1		2	3	100	34.2			PANEL DP2
		26.0										26.0		
			25.3										25.3	
DOCK LEVELER (NOTE 2)	14.5			25	6	7		8			0.0			SPACE
SPARE		0.0		20		9		10				0.0		SPACE
SPARE			0.0	20		11		12					0.0	SPACE
SPARE	0.0			20		13		14			0.0			SPACE
SPARE		0.0		20		15		16				0.0		SPACE
SPACE			0.0			17		18					0.0	SPACE
SPACE	0.0					19		20			0.0			SPACE
SPACE		0.0				21		22				0.0		SPACE
SPACE			0.0			23		24					0.0	SPACE
SPD	3.0			30	10	25		26			0.0			SPACE
		3.0						28				0.0		SPACE
			3.0					30					0.0	SPACE
SUB-TOTAL AMPS	51.7	29.0	28.3								34.2	26.0	25.3	SUB-TOTAL AMPS

TOTAL CONNECTED AMPS *A: 85.9* *B: 55.0* *C: 53.6*

PROVIDE SURE SUPPRESSION ON ALL CIRCUITS LEAVING MAGAZINE.

PANEL MDP-M NOTES:

1. PROVIDE PANEL IN NEMA 4X ENCLOSURE.
2. MAG 4 ONLY.

PANELBOARD DP1 SCHEDULE

100 AMP BUS | 100 AMP MCB | 208Y/120 VOLTS | 3 PH, 4 W, SN, MINIMUM | 10 KAIC | SURFACE MOUNTED

LOAD SERVED	LOAD AMPS A	LOAD AMPS B	LOAD AMPS C	BKR TRIP	WIRE SIZE	CKT NO.	PHASE A B C	CKT NO.	WIRE SIZE	BKR TRIP	LOAD AMPS A	LOAD AMPS B	LOAD AMPS C	LOAD SERVED
POWER BLAST DOOR	7.8			20	12	1		2	12	20	3.0			IDS PANEL
		7.8						4	12	20		3.0		RECEPT-MECH ROOM
			7.8					6	12	20			3.3	TELECOM RACK
LTG-MAG BAY	8.7			20	12	7		8	12	20	1.0			BLAST DOOR CNTRL PANEL
LTG-MAG BAY		8.7		20	12	9		10		20		0.0		SPARE
LTG-MAG BAY			8.7	20	12	11		12		20			0.0	SPARE
LTG-MAG BAY	8.7			20	12	13		14		20	0.0			SPARE
LTG-MECH ROOM		2.5		20	12	15		16		20		0.0		SPARE
LTG-EXTERIOR			1.5	20	12	17		18		20			0.0	SPARE
LTG-EXTERIOR	2.0			20	12	19		20			0.0			SPARE
LTG CONTACTOR		1.0		20	12	21		22				0.0		SPACE
LTG-EXTEIOR GATE (NOTE 1)			1.0	20	10	23		24					0.0	SPACE
SPARE	0.0			20		25		26			0.0			SPACE
SPARE		0.0		20		27		28				0.0		SPACE
SPARE			0.0	20		29		30					0.0	SPACE
SPACE	0.0					31		32			0.0			SPACE
SPACE		0.0				33		34				0.0		SPACE
SPACE			0.0			35		36					0.0	SPACE
SPD	3.0			30	10	37		38			0.0			SPACE
		3.0						40				0.0		SPACE
			3.0					42					0.0	SPACE
SUB-TOTAL AMPS	30.2	23.0	22.0								4.0	3.0	3.3	SUB-TOTAL AMPS

TOTAL CONNECTED AMPS *A: 34.2* *B: 26.0* *C: 25.3*

PROVIDE SURE SUPPRESSION ON ALL CIRCUITS LEAVING MAGAZINE.

PANEL DP1 NOTES:

1. MAG 1 AND MAG 4 ONLY.

PANELBOARD DP2 SCHEDULE

100 AMP BUS | 100 AMP MCB | 208Y/120 VOLTS | 3 PH, 4 W, SN, MINIMUM | 10 KAIC | SURFACE MOUNTED

LOAD SERVED	LOAD AMPS A	LOAD AMPS B	LOAD AMPS C	BKR TRIP	WIRE SIZE	CKT NO.	PHASE A B C	CKT NO.	WIRE SIZE	BKR TRIP	LOAD AMPS A	LOAD AMPS B	LOAD AMPS C	LOAD SERVED
POWER BLAST DOOR	7.8			20	12	1		2	12	20	3.0			IDS PANEL
		7.8						4	12	20		3.0		RECEPT-MECH ROOM
			7.8					6	12	20			3.3	TELECOM RACK
LTG-MAG BAY	8.7			20	12	7		8	12	20	1.0			BLAST DOOR CNTRL PANEL
LTG-MAG BAY		8.7		20	12	9		10		20		0.0		SPARE
LTG-MAG BAY			8.7	20	12	11		12		20			0.0	SPARE
LTG-MAG BAY	8.7			20	12	13		14		20	0.0			SPARE
LTG-MECH ROOM		2.5		20	12	15		16		20		0.0		SPARE
LTG-EXTERIOR			1.5	20	12	17		18		20			0.0	SPARE
LTG-EXTERIOR	2.0			20	12	19		20		20	0.0			SPARE
LTG CONTACTOR		1.0		20	12	21		22				0.0		SPACE
LTG-EXTEIOR GATE (NOTE 1)			1.0	20	10	23		24					0.0	SPACE
SPARE	0.0			20		25		26			0.0			SPACE
SPARE		0.0		20		27		28				0.0		SPACE
SPARE			0.0	20		29		30					0.0	SPACE
SPACE	0.0					31		32			0.0			SPACE
SPACE		0.0				33		34				0.0		SPACE
SPACE			0.0			35		36					0.0	SPACE
SPD	3.0			30	10	37		38			0.0			SPACE
		3.0						40				0.0		SPACE
			3.0					42					0.0	SPACE
SUB-TOTAL AMPS	30.2	23.0	22.0								4.0	3.0	3.3	SUB-TOTAL AMPS

TOTAL CONNECTED AMPS *A: 34.2* *B: 26.0* *C: 25.3*

PROVIDE SURE SUPPRESSION ON ALL CIRCUITS LEAVING MAGAZINE.

PANEL DP2 NOTES:

1. MAG 5 ONLY.

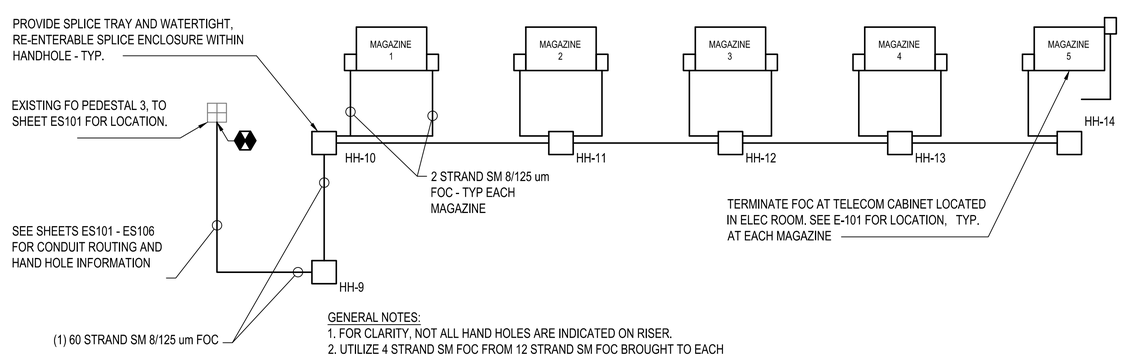

GENERAL NOTES:
1. FOR CLARITY, NOT ALL HAND HOLES ARE INDICATED ON RISER.
2. UTILIZE 4 STRAND SM FOC FROM 12 STRAND SM FOC BROUGHT TO EACH MAGAZINE FOR CONNECTION TO BASE SECURITY.

A3 SECURITY RISER DIAGRAM
SCALE: NOT TO SCALE

MARK	DESCRIPTION	DATE

SEAL

A/E INFO

APPROVED
FOR COMMANDER NAVFAC

ACTIVITY
Approved by LCDR VINCE DEL GRECO, ROICC with PWD YORKTOWN, via Email.
SATISFACTORY TO DATE 03/26/2026

DES CPO | DRW CPO | CHK JDU
PM/DM MME/WJW
BRANCH MANAGER WRB
CHIEF ENG/ARCH JWJ
FIRE PROTECTION HPN

DEPARTMENT OF THE NAVY
NAVAL FACILITIES ENGINEERING SYSTEMS COMMAND
MIDLANT PDC CORE
NAVAL FACILITIES ENGINEERING SYSTEMS COMMAND
NAVAL STATION NORFOLK, VIRGINIA
NAVAL WEAPONS STATION
YORKTOWN, VIRGINIA
P-171 WEAPONS MAGAZINES
ELECTRICAL SCHEDULES

SCALE: NONE
EPROJECT NO.: 1737010
CONSTR. CONTR. NO. ##
NAVFAC DRAWING NO. 12942031
SHEET 371 OF 499
E-603

DRAWFORM REVISION: 14 SEP 2023

FILE NAME: K:\AKYorktownMILCON\2024_1737010_P171_Weapons_Magazines\B_Design\DWGS MAGAZINE\Sheets\13_ELEC\P171-1737010-MAGZ-E-603.dwg LAYOUT NAME: E-603 ELECTRICAL SCHEDULES PLOTTED: Tuesday, March 31, 2026 - 1:25pm USER: clayton.obrien

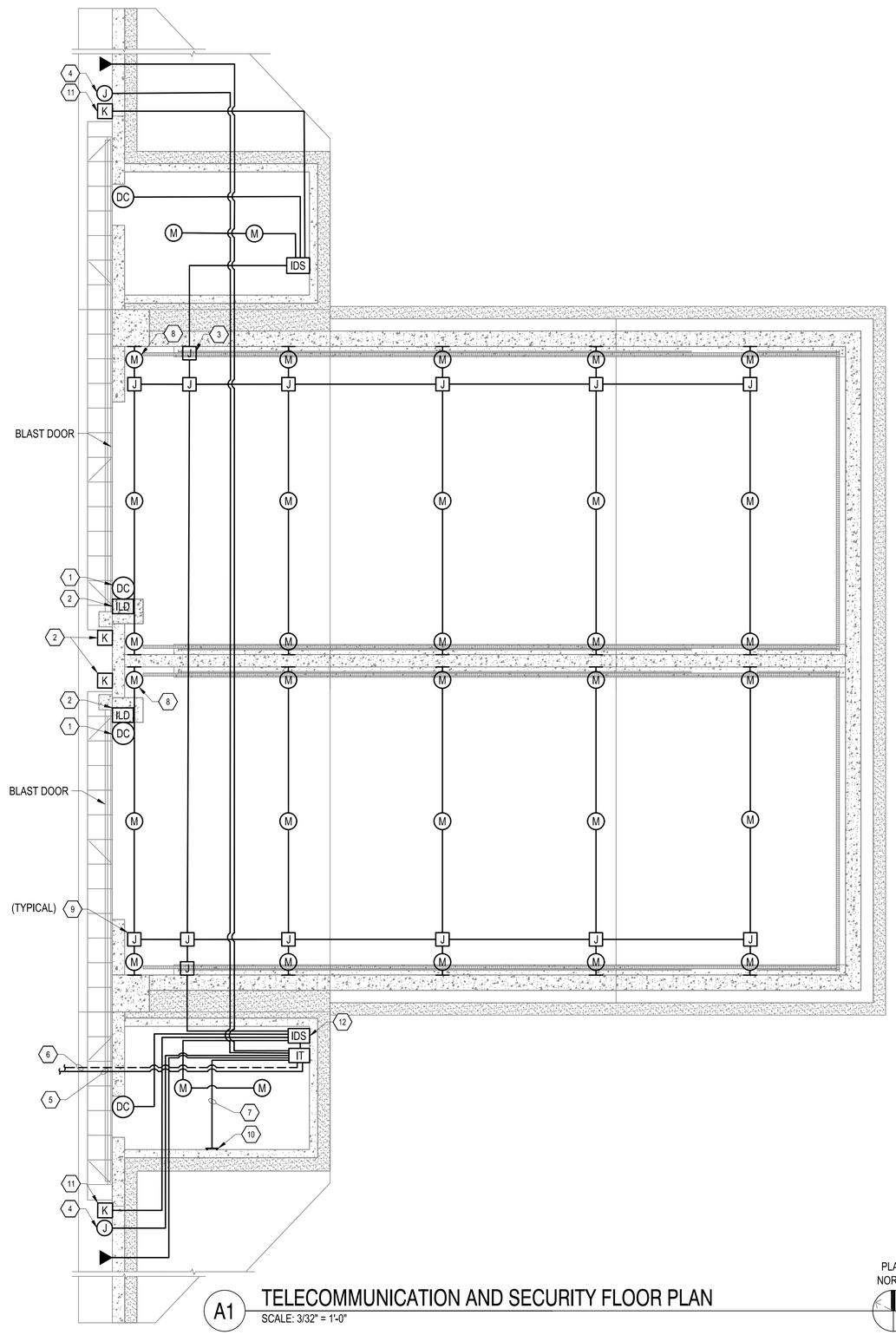

A1 TELECOMMUNICATION AND SECURITY FLOOR PLAN

SCALE: 3/32" = 1'-0"

LEGEND

DC	HIGH SECURITY BMS DOOR CONTACT
K	KEYPAD
M	MOTION DETECTOR, CEILING MOUNTED
M	MOTION DETECTOR, WALL MOUNTED
J	RECESSED JUNCTION BOX
J	SURFACE JUNCTION BOX
IDS	IDS CONTROLLER
IT	IT CABINET
▼	PHONE OUTLET, SEE DETAIL B3/T501

GENERAL SHEET NOTES

A. ALL CONDUIT MUST BE RIGID GALVANIZED STEEL CONDUIT UNLESS INDICATED OTHERWISE.

B. EXPOSED CONDUITS ON EXTERIOR WALLS IS PROHIBITED.

C. ECMS AND MECHANICAL ROOMS WILL BE SEPARATE IDS ZONES. PROVIDE DEVICES, CONTROLLERS, AND PROGRAMMING, AS REQUIRED.

D. PROPOSED IDS VENDOR TO PERFORM COVERAGE CALCULATIONS, INCLUDING OBSTRUCTIONS, TO VERIFY QUANTITY AND LOCATION OF MOTION DETECTORS IN THE ECMS AND MECHANICAL ROOMS. FINAL LOCATIONS AND QUANTITIES OF MOTION DETECTORS TO BE INSTALLED PER IDS VENDOR SHOP DRAWINGS.

E. ALL CONDUITS WILL BE MINIMUM 1"C UNLESS NOTED OTHERWISE. REFER TO T601 FOR CONDUIT SIZES.

F. CONDUITS WILL BE EXPOSED INSIDE THE MAGAZINE AND MECHANICAL ROOMS UNLESS INDICATED OTHERWISE. LOCATE CONDUITS AS HIGH AS POSSIBLE AND COORDINATE ROUTING WITH OTHER TRADES .

KEYED NOTES

1. DOOR CONTACT FOR ECM DOOR. COORDINATE WITH DOOR MANUFACTURER FOR EXACT LOCATION AND ROUGH-IN REQUIREMENTS. COORDINATE WITH THE CONTRACTING OFFICER FOR THE CONNECTION OF THE BALANCED MAGNETIC SWITCH (BMS) ON THE DOOR.
2. PROVIDE 1" CONDUIT FROM INTERNAL LOCKING DEVICE (ILD) POCKET TO THE IDS PULLBOX IN THE MAGAZINE, SEE RISER DIAGRAM ON T-601. COORDINATE WITH THE CONTRACTING OFFICER FOR THE WIRED CONNECTION OF THE ILD BMS TO THE IDS SYSTEM TO BE DONE BY NIWC.
3. 8"x8"x4" JUNCTION BOX FOR ECM IDS COMPONENTS. PROVIDE 2" PVC-COATED RGC TO MECHANICAL ROOM FOR IDS WIRING.
4. RECESSED ROUGH-IN FOR FUTURE CCTV CAMERA. PROVIDE 1" HOMERUN TO IT CABINET.
5. EXTEND TWO 1-1/2" CONDUITS TO SITE POLE, LOCATION TO BE DETERMINED THROUGH COORDINATION WITH BASE SSO AND COMM SQUADRON, FOR PoE IP CAMERA AND PoE WIRELESS ACCESS POINT. POLE LOCATION AND CONDUIT ROUTE WILL BE LIMITED BY MAXIMUM CABLE LENGTH OF 295' FROM PATCH PANEL TO DEVICE. REFER TO DETAIL B2/T-501 AND A1/T-601.
6. EXTEND TWO 4" CONDUITS TO NEAREST TELECOMM MANHOLE.
7. HOMERUN TO SERVICE GROUNDING BAR.
8. THE FIRST SET OF 3 MOTION DETECTORS WILL BE INSTALLED 3' FROM THE INSIDE FACE OF THE MAGAZINE DOOR. ADDITIONAL SETS OF 3 MOTION DETECTORS WILL BE EVENLY SPACED FOR COVERAGE OF THE INTERIOR SPACE, APPROXIMATELY 30' ON CENTER.
9. SURFACE MOUNT ON BOTTOM OF STRUCTURAL CEILING. J-BOX LOCATIONS AND CONDUIT ROUTING TO BE COORDINATED WITH ALL TRADES.
10. ELECTRICAL SERVICE GROUND BAR. REFER TO E-101.
11. WEATHERPROOF IDS KEYPAD WITH RAIN SHIELD.
12. IDS PANEL AND WIREWAY. REFER TO T-601.

GRAPHIC SCALE(S)

3/32"=1'-0" 0' 8' 16' 24'

MARK	DESCRIPTION	DATE

NAVFAC

SEAL

A/E INFO

APPROVED
Vince E. Grecco, P.E.
FOR COMMANDER NAVFAC

ACTIVITY
Approved by LCDR VINCE DEL GRECO, ROICC with PWD YORKTOWN, via Email.
SATISFACTORY TO DATE 03/26/2026

DES CPO	DRW CPO	CHK	JDU
PM/DM	MME/WJW		
BRANCH MANAGER	WRB		
CHIEF ENG/ARCH	JWJ		
FIRE PROTECTION	HPN		

DEPARTMENT OF THE NAVY
NAVAL FACILITIES ENGINEERING SYSTEMS COMMAND
MIDLANT PDC CORE
NAVAL FACILITIES ENGINEERING SYSTEMS COMMAND
NAVAL STATION NORFOLK, VIRGINIA
NAVAL WEAPONS STATION
YORKTOWN, VIRGINIA
P-171 WEAPONS MAGAZINES
TELECOMMUNICATION FLOOR PLAN

SCALE: AS SHOWN
EPROJECT NO.: 1737010
CONSTR. CONTR. NO. ##
NAVFAC DRAWING NO. 12942034
SHEET 372 OF 499

T-101

DRAWFORM REVISION: 14 SEP 2023

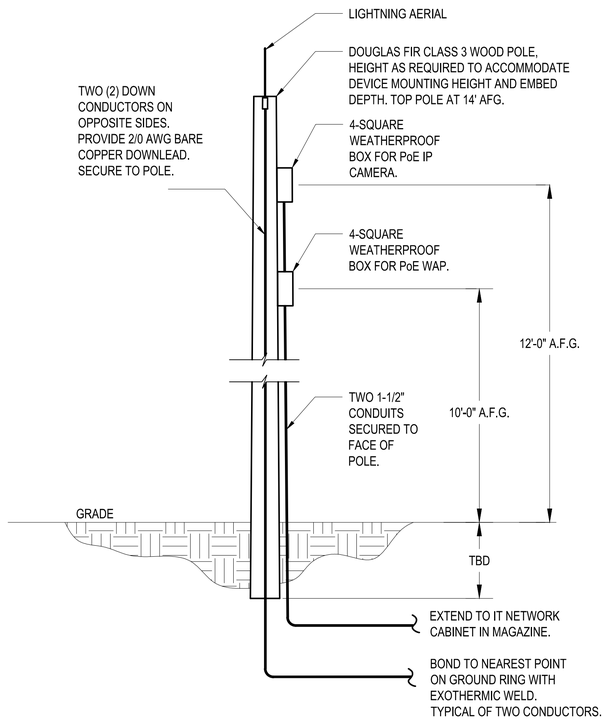

B2 POLE FOR SITE CAMERA AND WAP
SCALE: NO SCALE

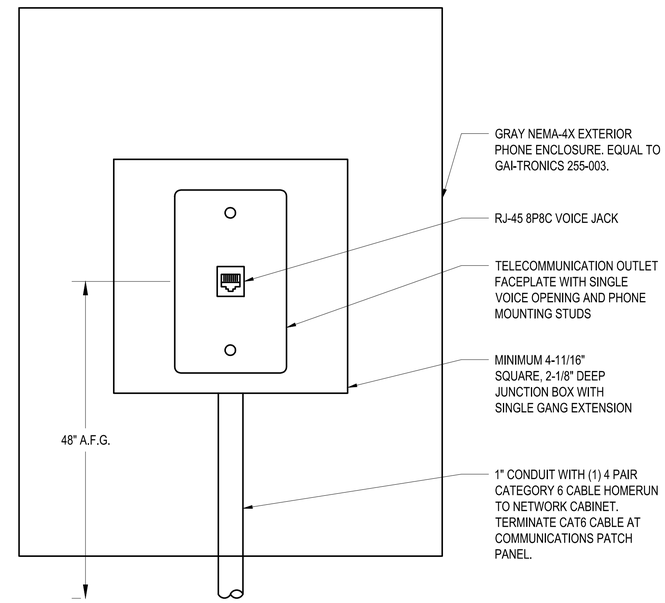

B3 VOICE WALL OUTLET
SCALE: NO SCALE

SYMBOL: ▼

MARK	DESCRIPTION	DATE

NAVFAC

SEAL

A/E INFO

APPROVED
CAPT Chris Cardillo, P.E.
FOR COMMANDER NAVFAC

ACTIVITY
Approved by LCDR VINCE DEL GRECO, ROICC with PWD YORKTOWN, via Email.
SATISFACTORY TO DATE 03/26/2026

DES CPO	DRW CPO	CHK	JDU
PM/DM	MME/WJW		
BRANCH MANAGER	WRB		
CHIEF ENG/ARCH	JWJ		
FIRE PROTECTION	HPN		

DEPARTMENT OF THE NAVY
NAVAL FACILITIES ENGINEERING SYSTEMS COMMAND
MIDLANT PDC CORE
NAVAL FACILITIES ENGINEERING SYSTEMS COMMAND
NAVAL STATION NORFOLK, VIRGINIA
NAVAL WEAPONS STATION
YORKTOWN, VIRGINIA
P-171 WEAPONS MAGAZINES
TELECOMMUNICATION DETAILS

SCALE: NONE
EPROJECT NO.: 1737010
CONSTR. CONTR. NO. ##
NAVFAC DRAWING NO. 12942035
SHEET 373 OF 499

T-501

DRAWFORM REVISION: 14 SEP 2023

FILE NAME: K:\AY\yorktown\MILCON\2024_1737010_P171_Weapons_Magazines\9_Design\DWGS - MAGAZINE\Sheet\14_TEL\P171-1737010-MAGZ-T-501.dwg LAYOUT NAME: T-501 TELECOMMUNICATION DETAILS PLOTTED: Thursday, April 02, 2026 - 11:02am USER: dayton.obrien

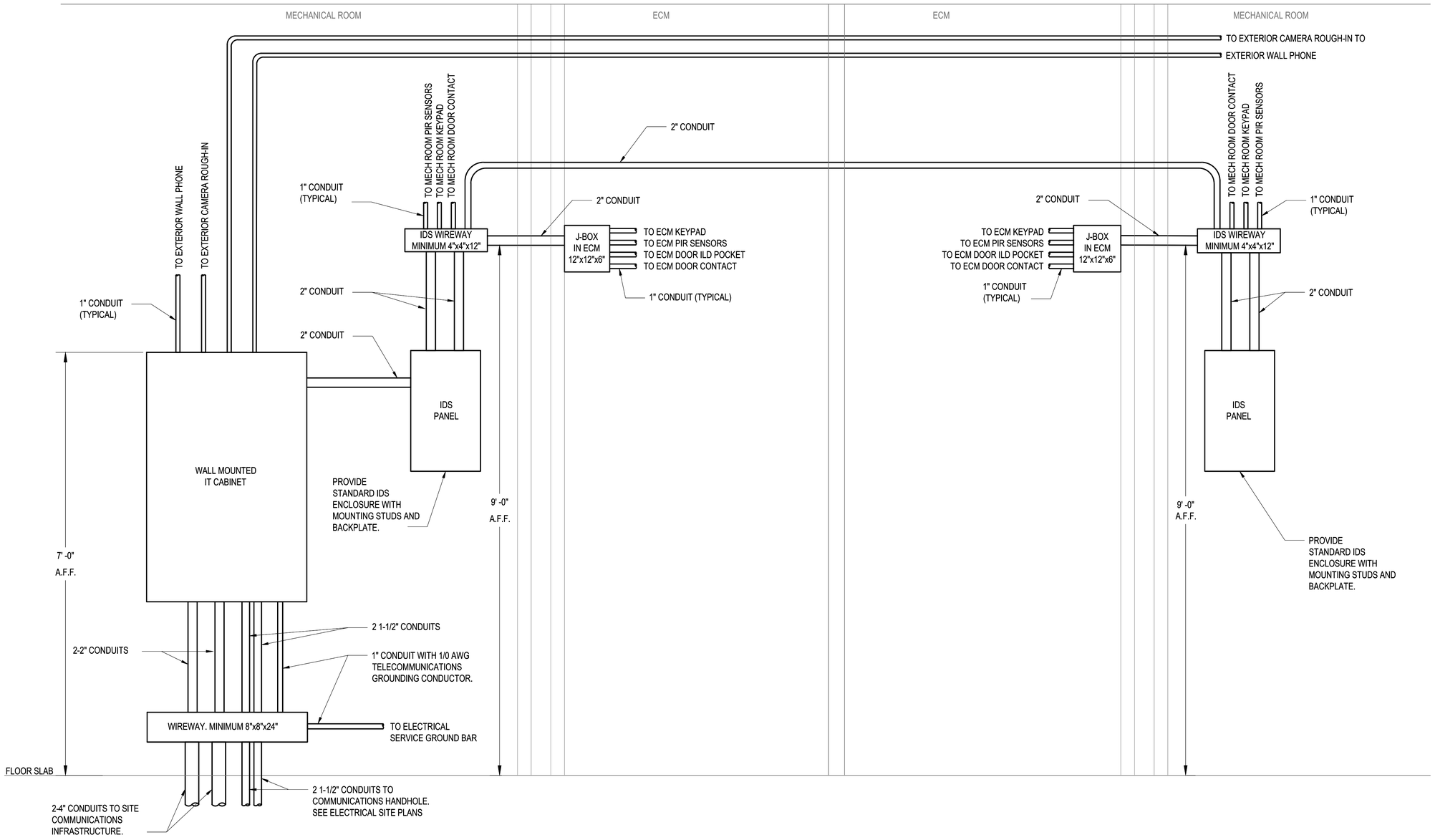

A1 TELECOMMUNICATION RISER DIAGRAM

SCALE: NO SCALE

MARK	DESCRIPTION	DATE

SEAL

A/E INFO

APPROVED

FOR COMMANDER NAVFAC

ACTIVITY: Approved by LCDR VINCE DEL GRECO, ROICC with PWD YORKTOWN, via Email.

SATISFACTORY TO DATE 03/26/2026

DES	DRW	CHK
CPO	CPO	JDU

PM/DM	MME/WJW
BRANCH MANAGER	WRB
CHIEF ENG/ARCH	JWJ
FIRE PROTECTION	HPN

DEPARTMENT OF THE NAVY
NAVAL FACILITIES ENGINEERING SYSTEMS COMMAND
MIDLANT PDC CORE

NAVAL FACILITIES ENGINEERING SYSTEMS COMMAND
NAVAL STATION NORFOLK, VIRGINIA

NAVAL WEAPONS STATION
YORKTOWN, VIRGINIA

P-171 WEAPONS MAGAZINES

TELECOMMUNICATION RISER

SCALE:	NONE
EPROJECT NO.:	1737010
CONSTR. CONTR. NO.	##
NAVFAC DRAWING NO.	12942036
SHEET	374 OF 499

T-601

DRAWFORM REVISION: 14 SEP 2023

FILE NAME: K:\IAY\Yorktown\MILCON\2024_1737010_P171_Weapons_Magazines\8_Design\DWGS - MAGAZINE\Sheet\14_TEL\P171-1737010-MAGZ-T-601.dwg LAYOUT NAME: T-601 TELECOMMUNICATION RISER PLOTTED: Thursday, April 02, 2026 - 11:03am USER: dayton.obrien