BUILDING CODE AND LIFE SAFETY ANALYSIS

APPLICABLE CODES, STANDARDS, AND DESIGN CRITERIA

STANDARD	TITLE	REVISION DATE	NOTES
UFC 1-200-01	GENERAL BUILDING REQUIREMENTS	01 OCTOBER 2020	--
UFC 3-600-01*	FIRE PROTECTION ENGINEERING FOR FACILITIES	12 AUGUST 2020	--
ICC	INTERNATIONAL BUILDING CODE(IBC)	2018	APPLICABLE CHAPTERS PER UFC 1-200-01; MEANS OF EGRESS MUST BE BASED UPON THE LIFE SAFETY CODE
NFPA 10	PORTABLE FIRE EXTINGUISHERS	2018	--
NFPA 13	STANDARD FOR THE INSTALLATION OF SPRINKLER SYSTEMS	2019	--
NFPA 72	NATIONAL FIRE ALARM SIGNALING CODE	2019	--
NFPA 70	NATIONAL ELECTRICAL CODE (NEC)	2020	--
NFPA 90A	STANDARD FOR THE INSTALLATION OF AIR-CONDITIONING AND VENTILATING SYSTEMS	2018	--
NFPA 101	LIFE SAFETY CODE (LSC)	2018	--
NAVSEA OP-5	AMMUNITION AND EXPLOSIVES SAFETY ASHORE	10 MARCH 2023	EIGHTH REVISION
DES REG 6055.09	DEFENSE EXPLOSIVES SAFETY REGULATION	JANUARY 13, 2019	EDITION 1

* UFC 3-600-01 GENERALLY REQUIRES CONSTRUCTION ISSUES TO COMPLY WITH IBC CRITERIA AND LIFE SAFETY/EGRESS ISSUES TO MEET THE REQUIREMENTS OF LSC. CONFLICTS BETWEEN THE IBC AND LSC RELATED TO FIRE RESISTANCE ARE REQUIRED TO COMPLY WITH LSC CRITERIA AND APPLICABLE PROVISIONS OF THE UFC CODE (UFC 3-600-01 § 2-1.1).

BUILDING DESCRIPTION

TYPE OF CONSTRUCTION	II-A
NUMBER OF STORIES	1
BUILDING HEIGHT	24'-8"

ALLOWABLE AREA FOR NEW CONSTRUCTION (TYPE II-A)

NUMBER OF STORIES	OCCUPANCY AND USE	(A) BLDG AREA PER STORY (ACTUAL)	(B) TABLE 506.2 AREA (PER STORY)	(C) AREA FOR FRONTAGE INCREASE (100% OPEN)	(E) ALLOWABLE AREA
1	H-1	9,244	11,000	8,250	19,250 (PER STORY)
TOTAL	--	9,244	--	--	19,250

ALLOWABLE HEIGHT (TYPE II-A)

	ALLOWABLE (TABLE 504.3)	ACTUAL
BUILDING HEIGHT	65'-0"	24'-8"
NUMBER OF STORIES	1	1

FIRE RESISTANCE RATING REQUIREMENTS FOR EXTERIOR WALLS OF TYPE II-A BUILDING BASED ON FIRE SEPARATION DISTANCE (IBC TABLE 602)

FIRE SEPARATION DISTANCE (FSD) TO LOT LINE	USE GROUP H-1
FSD < 5 FT	3 HR
5 FT ≥ FSD < 10 FT	2 HR
10 FT ≥ FSD < 30 FT	1 HR
FSD ≥ 30FT	0 HR

TYPE II-A FIRE RESISTANCE RATINGS (IN HOURS) OF STRUCTURAL ELEMENTS

BUILDING ELEMENT	HOURLY RATING REQ'D TYPE II-A	HOURLY RATING PROVIDED	NOTES
STRUCTURAL FRAME, INCLUDING COLUMNS, GIRDERS, TRUSSES	1	1	--
EXTERIOR BEARING WALLS	1	1	*NOT LESS THAN THE FIRE RESISTANCE RATING BASED ON THE FIRE SEPARATION DISTANCE FROM BUILDING 235 (SEE IBC TABLE 602)
INTERIOR BEARING WALLS	1	1	--
NONBEARING WALLS AND PARTITIONS EXTERIOR WALLS	0	0	*NOT LESS THAN THE FIRE RESISTANCE RATING BASED ON THE FIRE SEPARATION DISTANCE FROM BUILDING 235 (SEE IBC TABLE 602)
FLOOR CONST. INCLUDING SUPPORTING BEAMS AND JOISTS	1	1	--
ROOF CONSTRUCTION INCLUDING SUPPORTING BEAMS AND JOISTS	1	1	--
EXIT ENCLOSURES	1	1	NOT APPLICABLE
SHAFT ENCLOSURES	1	1	NOT APPLICABLE

ADDITIONAL FIRE RESISTIVE RATED CONSTRUCTION REQUIREMENTS

BUILDING ELEMENT/HAZARD DESCRIPTION	HOURLY RATING REQ'D ICC	HOURLY RATING PROVIDED	NOTES
H-1 / B OCCUPANCY SEPARATION	2 HR	2 HR	UFC 3-600-01 - 4-5.4.3

OCCUPANCY CLASSIFICATIONS

DESCRIPTION OF AREA	OCCUPANCY CLASSIFICATIONS IBC	OCCUPANCY CLASSIFICATIONS LSC
SEGREGATION AREA	HIGH HAZARD USE GROUP H-1	HIGH HAZARD-INDUSTRIAL (CHAPTER 40)
OFFICE	BUSINESS USE GROUP B	BUSINESS (CHAPTER 32)

APPLICABLE OCCUPANT LOAD FACTORS - LSC TABLE 7.3.1.2

USE	OCCUPANT LOAD FACTOR (FT2/PER PERSON)
BUSINESS	150 GROSS
INDUSTRIAL - SPECIAL PURPOSE, HIGH HAZARD	MAXIMUM PROBABLE NUMBER - TABLE 7.3.1.2 - "MP"
STORAGE, ORDINARY HAZARD	500 GROSS
BUSINESS COLLABORATION ROOM (≤ 450 FT²)	30 GROSS
MECHANICAL, TELECOM, ELECTRICAL SUPPORT	MAXIMUM PROBABLE NUMBER - TABLE 7.3.1.2 - "MP"

CALCULATED OCCUPANT LOADS PER LSC - SECTION 7.3.1

AREA	OCCUPANCY	APPROX. AREA	OCCUPANT LOAD FACTOR	OCCUPANT LOAD
FIRST FLOOR				
OFFICE	BUSINESS	1650	150	14
MECH/ELEC SUPPORT	UNOCCUPIED	517	MAXIMUM PROBABLE NUMBER	4
SEGREGATION	INDUSTRIAL - SPECIAL PURPOSE - HIGH HAZARD	5361	MAXIMUM PROBABLE NUMBER	5
PLANNING ROOM	BUSINESS/ COLLABORATION	214	30	8
SECURE STORAGE	STORAGE	447	500	1
LSC CALCULATED BUILDING OCCUPANT LOAD				**32**

NUMBER OF EXITS AND CAPACITY

FLOOR LEVEL	REQUIRED EXIT CAPACITY	AVAILABLE EXIT CAPACITY	NUMBER OF EXITS REQUIRED	NUMBER OF EXITS PROVIDED
FIRST FLOOR	28"	4 - 36" WIDE DOORS CLEAR WIDTH - 32" TOTAL - 128"	2 (LSC- 7.11.4)	4

COMMON PATH, DEAD END, & TOTAL TRAVEL DISTANCE ANALYSIS

TRAVEL DISTANCE REQUIREMENT	REQUIRED	ACTUAL
COMMON PATH OF TRAVEL		
• SPRINKLERED BUSINESS OCCUPANCIES (LSC 38.2.5)	100 FEET	60 FEET
• SPRINKLERED HIGH HAZARD INDUSTRIAL (LSC 40.2.5.1)	NOT PERMITTED	NONE
DEAD END PATH OF TRAVEL		
• SPRINKLERED BUSINESS OCCUPANCIES (LSC 38.2.5)	50 FEET	18.5 FEET
• SPRINKLERED HIGH HAZARD INDUSTRIAL (LSC 40.2.5.1 & 7.11.4)	NOT PERMITTED	NONE
TOTAL TRAVEL DISTANCE		
• SPRINKLERED BUSINESS OCCUPANCIES (LSC 38.2.4.2)-SINGLE EXIT	100 FEET	60 FEET
• SPRINKLERED HIGH HAZARD INDUSTRIAL STORAGE (LSC 40.2.5.1)	75 FEET	57 FEET

MEANS OF EGRESS SUMMARY

FLOOR, ROOM OR SPACE DESIGNATION	MINIMUM NUMBER OF EXITS REQUIRED	MINIMUM NUMBER OF EXITS SHOWN ON PLAN	TRAVEL DISTANCE ALLOWABLE TRAVEL DISTANCE (LSC)	TRAVEL DISTANCE ACTUAL TRAVEL DISTANCE SHOWN ON PLANS	ARRANGEMENT MEANS OF EGRESS REQ'D DISTANCE BETWEEN EXIT DOORS	ARRANGEMENT MEANS OF EGRESS ACTUAL DISTANCE SHOWN ON PLANS
FIRST FLOOR (BUSINESS)	1	1	100 FT	60 FT	ONE EXIT - N/A LSC - 38.2.4.2	N/A
FIRST FLOOR (HIGH HAZARD)	2	4	100 FT	57 FT	127'/3=43 FT	74 FT & 52 FT

SYM	DESCRIPTION	DATE	APPR

NAVFAC

SEAL

A/E INFO

APPROVED

FOR COMMANDER NAVFAC

ACTIVITY

SATISFACTORY TO DATE

DES KEK | DRW DMH | CHK SSR

PM/DM MMP/SLC

BRANCH MANAGER CGM

CHIEF ENG/ARCH JWJ

FIRE PROTECTION HPN

DEPARTMENT OF THE NAVY
NAVAL FACILITIES ENGINEERING SYSTEMS COMMAND
MIDLANT DC CORE

NAVAL FACILITIES ENGINEERING SYSTEMS COMMAND - MID-ATLANTIC
NAVAL STATION - NORFOLK, VA

NAVAL WEAPONS STATION YORKTOWN, VIRGINIA

P171 WEAPON MAGAZINES
SEGREGATION FACILITIES

BUILDING CODE ANALYSIS

SCALE: AS NOTED

EPROJECT NO.: 1737010

CONSTR. CONTR. NO.

NAVFAC DRAWING NO. 12942039

SHEET 375 OF 499

GI001A

DRAWFORM REVISION: 25 AUGUST 2020

3/30/2026 11:24:32 AM GI001A
C:\Users\david.haddock\Documents\P171-1737010-F-R21-SEG_david.haddock.rvt

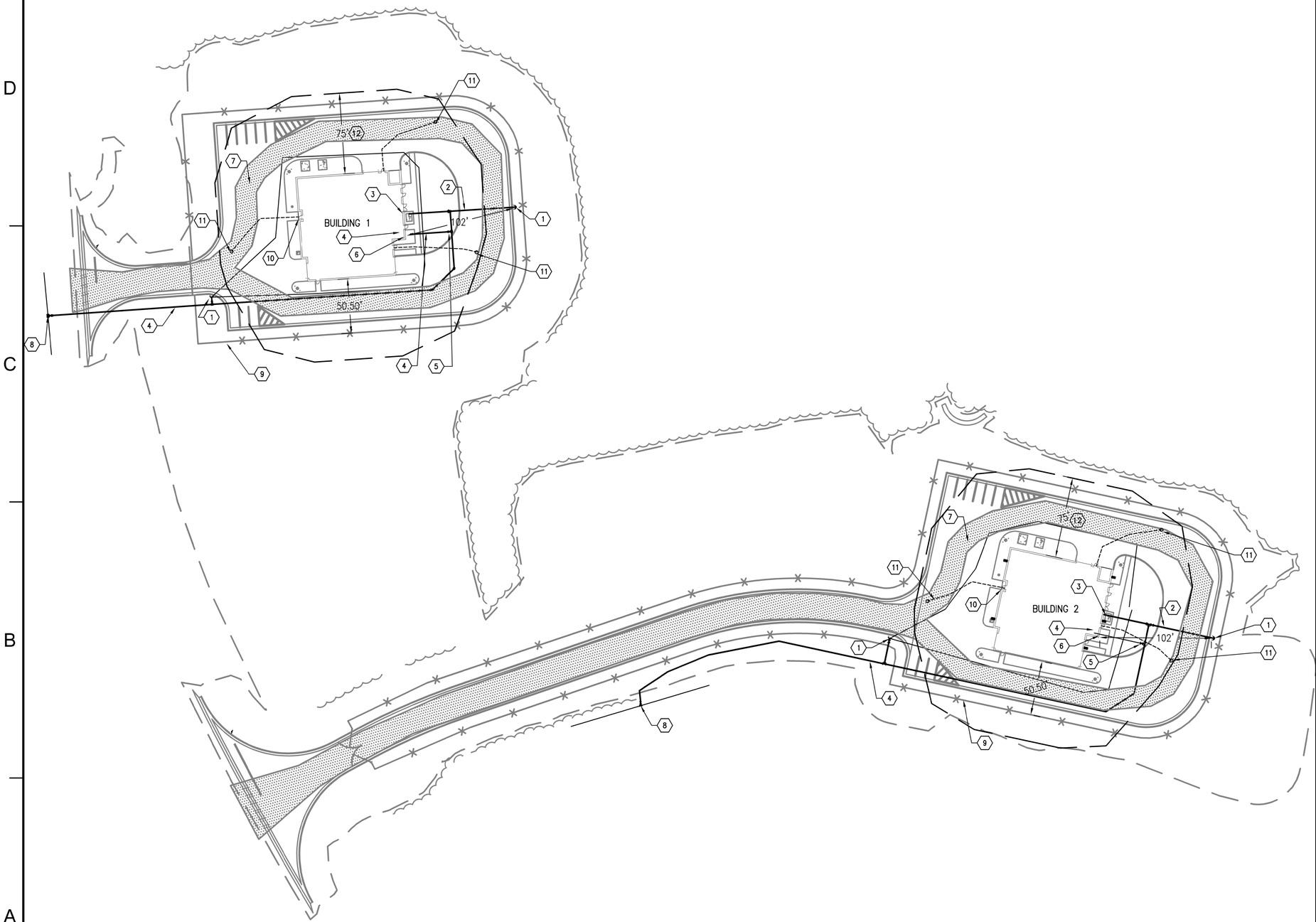

A1 CODE COMPLIANCE SITE PLAN
SCALE: 1" = 50'

PLAN NORTH

GENERAL SHEET NOTES

A. SEE PLUMBING PLANS FOR CONTINUATION OF DOMESTIC WATER AND SANITARY SEWER IN THE BUILDING.

B. SEE FIRE PROTECTION PLANS FOR CONTINUATION OF FIRE SERVICE IN THE BUILDING.

C. FOR HYDRANT FLOW TEST AND MAP SEE FX001A.

NEW WORK KEYNOTES

1. FIRE HYDRANT ASSEMBLY
2. 6" FIRE WATER LINE
3. 4" DOMESTIC WATER SERVICE
4. 8" FIRE SERVICE TO FIRE SERVICE ROOM. BACKFLOW ASSEMBLY IN BLDG.
5. 8" VALVE AND BOX, MINIMUM 40' FROM BUILDING
6. FIRE DEPARTMENT CONNECTION
7. FIRE DEPARTMENT ACCESS – MIN 20'
8. CONNECTION TO EXISTING WATER SUPPLY
9. PERIMETER SECURITY FENCE
10. FIRE DEPARTMENT MAIN ENTRANCE. FACP ON LEFT INSIDE DOORWAY.
11. 75 FT EXIT DISCHARGE TRAVEL DISTANCE FROM HAZARDOUS OCCUPANCY
12. FIRE SEPARATION DISTANCE – 75 FT FOR H-1 OCCUPANCY 415.6.4.1 AND UFC 3-600-01, 4-5.4.4.

GRAPHIC SCALE

1"=50' 0' 50' 100'

MARK	DESCRIPTION	DATE

NAVFAC

SEAL

A/E INFO

APPROVED

FOR COMMANDER NAVFAC

ACTIVITY: Approved by LCDR VINCE DEL GRECO, ROICC with PWD YORKTOWN, via Email,

SATISFACTORY TO DATE 03/26/2026

DES KEK DRW DMH CHK SS5

PM/DM MMP/SLC

BRANCH MANAGER CGM

CHIEF ENG/ARCH JWJ

FIRE PROTECTION HPN

DEPARTMENT OF THE NAVY
NAVAL FACILITIES ENGINEERING SYSTEMS COMMAND
NAVAL FACILITIES ENGINEERING SYSTEMS COMMAND
NAVAL STATION NORFOLK, VIRGINIA
MIDLAN, DC CORE
NAVAL WEAPON STATION YORKTOWN, VIRGINIA

P171 - SEGREGATION BUILDINGS

CODE COMPLIANCE SITE PLAN

SCALE: AS SHOWN

EPROJECT NO.: 1737010

CONSTR. CONTR. NO.

NAVFAC DRAWING NO. 12942040

SHEET 376 OF 499

GI100A

DRAWFORM REVISION: 14 SEP 2023

FILE NAME: K:\VA\Yorktown\MILCON\2024_1737010_P171_Weapons_Magazines\B_Design\DWGS – SEGREGATION\10_FP\Site LS DWG\P171-1737010-GI100A.dwg LAYOUT NAME: GI102A PLOTTED: Monday, March 30, 2026 - 10:25am USER: david.haddock

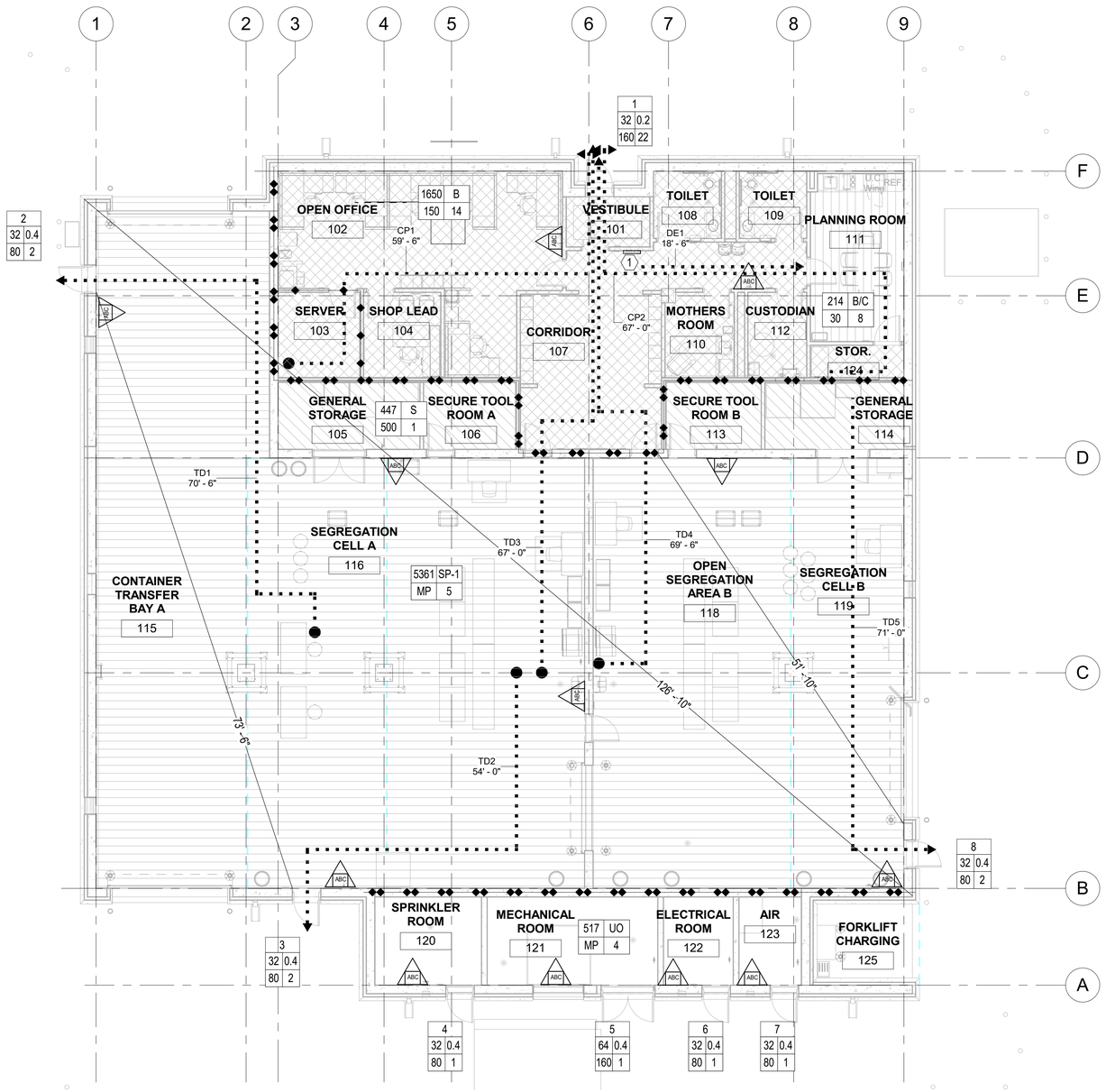

TRAVEL DISTANCE SUMMARY		
ID	ACTUAL	MAXIMUM
CP1	59' - 6"	100'
CP2	67' - 0"	100'
DE1	18' - 6"	50'
TD1	70' - 6"	75'
TD2	54' - 0"	75'
TD3	67' - 0"	75'
TD4	69' - 6"	75'
TD5	71' - 0"	75'

EXIT CAPACITY SCHEDULE				
EXIT NUMBER	NET CLEAR EXIT WIDTH (INCHES)	EXIT WIDTH PER PERSON (EGRESS FACTOR)	EXIT CAPACITY (PEOPLE)	ACTUAL PERSONS USING EXIT
1	32	0.2	160	22
2	32	0.4	80	2
3	32	0.4	80	2
4	32	0.4	80	1
5	64	0.4	160	1
6	32	0.4	80	1
7	32	0.4	80	1
8	32	0.4	80	2
TOTAL			800	32

OCCUPANCY HATCH LEGEND	
MARK	OCCUPANCY USE MP = MAXIMUM PROBABLE NUMBER
	BUSINESS (B)
	BUSINESS - COLLABORATION (B-C)
	SPECIAL PURPOSE - INDUSTRIAL * (SP-I)
	STORAGE - ORDINARY (S)

UO = UNOCCUPIED

* CLASS II, DIV 1 ELECTRICAL CLASSIFICATION

A1 FLOOR PLAN - LIFE SAFETY

1/8" = 1'-0"

PLAN NORTH — BLDG 1

PLAN NORTH — BLDG 2

GENERAL NOTES

A. FOR BUILDING CODE ANALYSIS REFER TO G001A

B. FOR CODE COMPLIANCE SITE PLAN REFER TO G100A

C. INFORMATION PROVIDED APPLIES TO BOTH SEGREGATION BUILDING LOCATIONS

KEY NOTES

1. FACU

LIFE SAFETY LEGEND

SYMBOL	DESCRIPTION
	2 HOUR FIRE BARRIER
CP XX' - XX"	COMMON PATH OF TRAVEL
DE XX' - XX"	DEAD -END CORRIDOR
TD XX' - XX"	TRAVEL DISTANCE

EXIT ID NUMBER — 1

NET EXIT WIDTH (INCHES) — 34 — EXIT WIDTH PER PERSON — 0.2

MAX EXIT CAPACITY (PEOPLE) — 170 — ACTUAL EGRESS (PEOPLE) — 0

ROOM / ZONE AREA (SF) — 1500 — OCCUPANCY, TYPE — B — SEE OCCUPANCY HATCH LEGEND

OCCUPANCY, ALLOWABLE AREA PER OCCUPANT — 150 — OCCUPANCY LOAD (PEOPLE) — 10

DRY CHEMICAL EXTINGUISHER - ABC TYPE
4A:80B:C UL RATED 10 LB EXTINGUISHER

GRAPHIC SCALE(S)

1/8" = 1' - 0" 0 5' 10' 15' 30'

SYM	DESCRIPTION	DATE	APPR

SEAL

A/E INFO

APPROVED

FOR COMMANDER NAVFAC

ACTIVITY

SATISFACTORY TO DATE

DES KEK | DRW DMH | CHK SSR

PM/DM MMP/SLC

BRANCH MANAGER CGM

CHIEF ENG/ARCH JWJ

FIRE PROTECTION HPN

DEPARTMENT OF THE NAVY
NAVAL FACILITIES ENGINEERING SYSTEMS COMMAND
MIDLANT DC CORE

NAVAL FACILITIES ENGINEERING SYSTEMS COMMAND - MID-ATLANTIC
NAVAL STATION - NORFOLK, VA

NAVAL WEAPONS STATION — YORKTOWN, VIRGINIA

P171 WEAPON MAGAZINES
SEGREGATION FACILITIES

FLOOR PLAN - LIFE SAFETY

SCALE: AS NOTED

EPROJECT NO.: 1737010

CONSTR. CONTR. NO.

NAVFAC DRAWING NO. 12942041

SHEET 377 OF 499

GI101A

DRAWFORM REVISION: 25 AUGUST 2020

3/30/2026 11:24:33 AM GI101A
C:\Users\david.haddock\Documents\P171-1737010-F-R21-SEG_david.haddock.rvt

GENERAL NOTES

1. UNIFIED FACILITIES CRITERIA UFC 1-200-01 - DOD BUILDING CODE (01 SEPTEMBER 2022 CHANGE 2, 12 JUNE 2023) IS THE OVERARCHING DOCUMENT FOR THE DESIGN OF THE STRUCTURAL SYSTEM FOR THIS PROJECT. BELOW ARE CORE UNIFIED FACILITIES CRITERIA, CONSENSUS BUILDING CODES AND STANDARDS DIRECTED BY UFC 1-200-01 FOR USE IN THE DESIGN OF THE STRUCTURAL SYSTEM:

   A. CORE UNIFIED FACILITIES CRITERIA:

      a. UFC 3-301-01 (11 APRIL 2023): STRUCTURAL ENGINEERING

   B. CONSENSUS BUILDING CODES AND STANDARDS:

      a. GENERAL:

         - IBC 2021: INTERNATIONAL BUILDING CODE
         - ASCE 7-16, WITH SUPPLEMENT 1: AMERICAN SOCIETY OF CIVIL ENGINEERS, MINIMUM DESIGN LOADS FOR BUILDINGS AND OTHER STRUCTURES

      b. CONCRETE:

         - ACI 318-19: AMERICAN CONCRETE INSTITUTE, BUILDING CODE REQUIREMENTS FOR STRUCTURAL CONCRETE

      c. METALS:

         - ANSI/AISC 360-16: AMERICAN INSTITUTE OF STEEL CONSTRUCTION, SPECIFICATION FOR STRUCTURAL STEEL BUILDINGS
         - AWS D1.1-2015: AMERICAN WELDING SOCIETY, STRUCTURAL WELDING CODE – STEEL
         - ANSI/NAAMM MBG 531-17: NATIONAL ASSOCIATION OF ARCHITECTURAL METAL MANUFACTURERS, METAL BAR GRATING MANUAL

2. THIS PROJECT IS SUBJECT TO IBC 2021 SPECIAL INSPECTION REQUIREMENTS AS MODIFIED BY UFC 3-301-01 AND UFC 3-600-01. THE STATEMENT AND SCHEDULE OF SPECIAL INSPECTIONS, INCLUDED WITH THE PROJECT SPECIFICATIONS, DEFINE THE SCOPE OF SPECIAL INSPECTIONS.

3. THIS PROJECT IS SUBJECT TO IBC 2021 STRUCTURAL OBSERVATION REQUIREMENTS FOR STRUCTURES. THE PROJECT SPECIFICATIONS DEFINE THE SCOPE OF STRUCTURAL OBSERVATIONS.

4. THE STRUCTURAL SYSTEM HAS NOT BEEN DESIGNED TO RESIST PROGRESSIVE COLLAPSE IN ACCORDANCE WITH UFC 4-023-03.

5. THE STRUCTURES ASSOCIATED WITH THIS PROJECT DO NOT MEET THE OCCUPANCY LEVELS OF INHABITED BUILDINGS. THEREFORE, THE STRUCTURES ARE EXEMPT FROM UFC 4-010-01 ANTITERRORISM PROVISIONS.

6. COORDINATE STRUCTURAL WORK WITH WORK SHOWN ON OTHER DRAWINGS.

7. CONTRACT DOCUMENTS REPRESENT THE FINISHED STRUCTURE. PROVIDE MEANS AND METHODS OF CONSTRUCTION INCLUDING, BUT NOT LIMITED TO, SHORING AND TEMPORARY BRACING TO MAINTAIN THE STRUCTURE IN A SAFE AND STABLE CONDITION AT ALL TIMES. THE CONTRACTOR IS SOLELY RESPONSIBLE TO DETERMINE ERECTION PROCEDURES AND SEQUENCE OF CONSTRUCTION. UNDERTAKE NECESSARY MEASURES TO ENSURE SAFETY OF PERSONS AND STRUCTURES AT THE SITE AND ADJACENT TO THE SITE. VISITS TO THE SITE BY THE CONTRACTING OFFICER OR CONTRACTING OFFICER'S REPRESENTATIVE DO NOT RELIEVE THE CONTRACTOR OF SUCH RESPONSIBILITY.

8. WHERE CERTAIN FEATURES ARE NOT FULLY SHOWN OR CALLED FOR ON THE CONTRACT DRAWINGS OR SPECIFICATIONS, CONSTRUCT OF THE SAME CHARACTER AS FOR SIMILAR CONDITIONS THAT ARE SHOWN OR CALLED FOR SUBJECT TO THE APPROVAL OF THE CONTRACTING OFFICER. WHERE SECTIONS VARY, PROVIDE FOR SMOOTH TRANSITIONS BETWEEN THEM, UNLESS NOTED OTHERWISE.

9. REPORT DIMENSIONAL DISCREPANCIES BETWEEN DRAWINGS TO THE CONTRACTING OFFICER PRIOR TO BEGINNING WORK IN AFFECTED AREAS.

10. CONSTRUCTION MEANS, METHODS, TECHNIQUES, SEQUENCES AND SUPERVISION OF THE WORK ARE THE SOLE RESPONSIBILITY OF THE CONTRACTOR.

11. DETAILS TITLED OR NOTED AS TYPICAL OR STANDARD APPLY NOT ONLY WHERE SPECIFICALLY INDICATED OR REFERENCED BUT ALSO IN OTHER CASES WHERE THE NATURE OF THE CONSTRUCTION REQUIRES THEIR USE. DETERMINE APPLICABILITY OF TYPICAL AND STANDARD DETAILS FROM DESCRIPTIVE TITLES OR FROM THE SIMILARITY OF A CONSTRUCTION CONDITION WITH ANOTHER CONDITION WHERE THE DETAIL IS SPECIFICALLY INDICATED OR REFERENCED.

12. ELEVATIONS SHOWN ON THE STRUCTURAL DRAWINGS ARE RELATIVE TO A REFERENCE ELEVATION OF 0'-0" THAT CORRESPONDS TO THE FOLLOWING ELEVATIONS ABOVE SEA LEVEL BASED ON THE VIRGINIA NORTH AMERICAN VERTICAL DATUM, 1988 (NAVD88):

   A. SEGREGATION BUILDING 1: 52.65
   B. SEGREGATION BUILDING 2: 50.50

DESIGN LOADS AND CRITERIA

1. RISK CATEGORY: III

2. LIVE LOADS:

   A. UNIFORM:

      a. CONTAINER TRANSFER, SEGREGATION AND CHARGING: 250 PSF
      b. MECHANICAL, ELECTRICAL, SPRINKLER AND AIR: 150 PSF
      c. MECHANICAL CATWALK: 40 PSF
      d. OTHER AREAS: 125 PSF
      e. ROOF: 20 PSF MINIMUM OR SNOW DRIFT

   B. CONCENTRATED:

      a. GROUND FLOOR SLAB: 2,000 LBS UNIFORMLY DISTRIBUTED OVER AN AREA 2.5 FEET BY 2.5 FEET
      b. ROOF: 300 LBS

   C. VEHICLE (REFER TO S-901A FOR FORKLIFT AXLE LOADS.):

      a. CONTAINER TRANSFER AND SEGREGATION: LOADED FORKLIFT
      b. FORKLIFT CHARGING: UNLOADED FORKLIFT
      c. CONTAINER TRANSFER: TRACTOR TRAILER WITH 80,000 LBS GROSS VEHICLE WEIGHT (TRACTOR AND TRAILER) AND WB-67 WHEEL BASE WITH THE FOLLOWING AXLE LOADS:

         SINGLE DRIVE AXLE: 16 KIPS/12 KIPS
         TANDEM DRIVE AXLE: 32 KIPS/34 KIPS (19'-6" FROM STEER AXLE)
         TANDEM TRAILER AXLE: 32 KIPS/34 KIPS (45'-6" FROM DRIVE AXLE)

3. UNIFORM, CONCENTRATED AND VEHICLE LIVE LOADS HAVE NOT BEEN APPLIED CONCURRENTLY. WHERE UNIFORM, CONCENTRATED AND VEHICLE LOADS ARE INDICATED, THE SUPPORTING STRUCTURE HAS BEEN DESIGNED FOR THE LOAD THAT PRODUCES THE GREATER LOAD EFFECTS.

4. LIVE LOADS FOR FLOOR AND ROOF FRAMING HAVE NOT BEEN REDUCED.

5. BOLLARDS: 6,000 LB CONCENTRATED LOAD APPLIED HORIZONTALLY IN ANY DIRECTION AT 2'-3" ABOVE THE FLOOR SURFACE AS NON-CRASH AND NON-ATTACK-RESISTANT BOLLARDS.

6. HANDRAIL AND GUARDRAIL SYSTEMS:

   A. TOP RAIL:

      a. CONCENTRATED LOAD: 200 LB APPLIED IN ANY DIRECTION AT ANY POINT ON THE TOP RAIL
      b. UNIFORM LOAD: 50 PLF APPLIED IN ANY DIRECTION ALONG TOP RAIL AND NOT ACTING CONCURRENTLY WITH THE CONCENTRATED LOAD

   B. INTERMEDIATE RAILS:
      a. CONCENTRATE LOAD: 50 LBS APPLIED HORIZONTALLY AND NORMAL TO THE RAILING ON AN AREA NOT EXCEEDING 12-INCH BY 12-INCH AND NOT ACTING CONCURRENTLY WITH THE TOP RAIL CONCENTRATED AND UNIFORM LOADS.

7. FIXED LADDERS:

   A. LADDER: 300 LB APPLIED AT ANY POINT TO PRODUCE MAXIMUM LOAD EFFECT ON ELEMENT CONSIDERED WITH NUMBER AND POSITION OF ADDITIONAL CONCENTRATED LOAD UNITS OF 1 UNIT OF 300 LB FOR EVERY 10 FEET OF LADDER HEIGHT.
   B. SIDE RAIL EXTENSION: 100 LB SINGLE CONCENTRATED LIVE LOAD APPLIED IN ANY DIRECTION AT ANY HEIGHT UP TO THE TOP OF THE SIDE RAIL EXTENSION.

8. ROOF SNOW LOAD DATA:

   A. GROUND SNOW LOAD: p_g = 15 PSF
   B. FLAT-ROOF SNOW LOAD: p_f = 12 PSF
   C. SNOW EXPOSURE FACTOR: C_e = 1.0 FOR PARTIALLY EXPOSED AT TERRAIN CATEGORY B
   D. SNOW LOAD IMPORTANCE FACTOR: I_s = 1.10
   E. THERMAL FACTOR: C_t = 1.0 AND SLOPE FACTOR: C_s = 1.0
   F. DRIFT SURCHARGE LOAD: p_d = 54 PSF
   G. WIDTH OF SNOW DRIFT: w = 13.5 FEET

9. WIND DESIGN DATA:

   A. BASIC DESIGN WIND SPEED: 124 MPH
   B. ALLOWABLE STRESS DESIGN WIND SPEED: 96 MPH
   C. WIND EXPOSURE CATEGORY: C
   D. INTERNAL PRESSURE COEFFICIENTS: +/- 0.18.
   E. ENCLOSURE CLASSIFICATION: ENCLOSED
   F. TOPOGRAPHIC FACTOR: 1.0
   G. THE BUILDING LOCATION IS NOT A HURRICANE-PRONE REGION SINCE THE BASIC DESIGN WIND SPEED FOR RISK CATEGORY II IS NOT GREATER THAN 115 MPH.
   H. THE BUILDING LOCATION IS NOT A WIND-BORNE DEBRIS REGION SINCE THE BASIC DESIGN WIND SPEED IS NOT EQUAL TO OR GREATER THAN 130 MPH.
   I. REFER TO COMPONENTS AND CLADDING PRESSURE NOTES ON S-901A FOR BASIC DESIGN WIND PRESSURES APPLIED TO EXTERIOR COMPONENT AND CLADDING MATERIALS NOT SPECIFICALLY DESIGNED BY THE REGISTERED DESIGN PROFESSIONAL RESPONSIBLE FOR THE DESIGN OF THE STRUCTURE.

10. ROOF RAIN LOAD DATA: 100-YEAR RAIN INTENSITY: i = 3.5 INCH/HOUR

11. NOTIONAL LOADS FOR GENERAL STRUCTURAL INTEGRITY: IN ACCORDANCE WITH ASCE 7-16 SECTION 1.4.

DESIGN LOADS AND CRITERIA CONTINUED

12. FLOOD DESIGN DATA:

   A. FLOOD DESIGN CLASS 2 ASSIGNED ACCORDING TO ASCE 24 TABLE 1-1
   B. ELEVATION OF THE PROPOSED LOWEST FLOOR AND ELEVATION TO WHICH BUILDING IS DRY FLOODPROOFED: BUILDING 1: 52.65 AND BUILDING 2: 48.50
   C. ELEVATION OF THE BOTTOM OF THE LOWEST HORIZONTAL STRUCTURAL MEMBER OF THE LOWEST FLOOR: BUILDING 1: 48.32 AND BUILDING 2: 44.17

13. EARTHQUAKE DESIGN DATA:

   A. SEISMIC IMPORTANCE FACTOR: I_e = 1.25
   B. MAPPED SPECTRAL RESPONSE ACCELERATION PARAMETERS:
      S_S = 0.109g, S_1 = 0.0425g
   C. SITE CLASS: D
   D. DESIGN SPECTRAL RESPONSE ACCELERATION PARAMETERS:
      S_{DS} = 0.116g, S_{D1} = 0.068g
      SEISMIC DESIGN CATEGORY: A
   E. BASIC SEISMIC FORCE-RESISTING SYSTEM: BEARING WALL SYSTEM WITH ORDINARY REINFORCED CONCRETE SHEAR WALLS
   F. DESIGN BASE SHEAR (DUE TO ASD WIND LOADING):

      a. PLAN NORTH-SOUTH DIRECTION: 114 KIPS
      b. PLAN EAST-WEST DIRECTION: 108 KIPS

   G. SEISMIC RESPONSE COEFFICIENT: C_s = 0.03625
   H. RESPONSE MODIFICATION COEFFICIENT: R = 4
   I. ANALYSIS PROCEDURE USED: EQUIVALENT LATERAL FORCE ANALYSIS
   J. THE ASCE 7-16 SEISMIC DESIGN REQUIREMENTS FOR BUILDINGS DO NOT APPLY TO THIS BUILDING SINCE IT HAS BEEN ASSIGNED TO SEISMIC DESIGN CATEGORY A.

SERVICEABILITY LIMITS

1. PILE FOUNDATION AND DRILLED SHAFT SETTLEMENT LIMIT: 1/2 INCH TOTAL FOR INDIVIDUAL PILES OR PILE GROUPS OR AN ANGULAR DISTORTION OF 1/500.

2. CONCRETE FLOOR AND ROOF DEFLECTION LIMITS FOR THAT PART OF THE TOTAL DEFLECTION OCCURRING AFTER ATTACHMENT OF NONSTRUCTURAL ELEMENTS, WHICH IS THE SUM OF THE TIME-DEPENDENT DEFLECTION DUE TO ALL SUSTAINED LOADS AND THE IMMEDIATE DEFLECTION DUE TO ANY ADDITIONAL LIVE LOAD (FOR TWO-WAY SLABS, L = SLAB PANEL LARGEST CLEAR SPAN DIMENSION):

   A. ROOFS: L/240 (INTERIOR NON-LOAD BEARING PARTITIONS REQUIRE DEFLECTION TRACK TO ALLOW FOR ROOF SLAB DEFLECTION OF 1-INCH)
   B. FLOORS AT ADMINISTRATIVE AREA: L/480

3. FLOORS OTHER THAN ADMINISTRATIVE AREA: L/360 FOR IMMEDIATE DEFLECTION DUE TO LIVE LOAD SINCE THESE FLOOR AREAS DO NOT SUPPORT OR HAVE NONSTRUCTURAL ELEMENTS ATTACHED TO THEM THAT ARE LIKELY TO BE DAMAGED BY LARGE DEFLECTIONS.

4. HANDRAIL AND GUARDRAIL SYSTEM: SUM OF THE RAIL HEIGHT DIVIDED BY 24 PLUS THE EFFECTIVE RAIL LENGTH DIVIDED BY 96 (H/24 + L/96).

5. WIND INDUCED LATERAL DRIFT AND DEFLECTION LIMITS BASED ON 0.42 TIMES THE APPLICABLE BASIC MAIN WIND FORCE-RESISTING SYSTEM OR COMPONENT AND CLADDING LOADS (ALLOWABLE STRESS DESIGN WIND SPEED WITH A 10-YEAR MEAN RETURN INTERVAL):

   A. BUILDING LATERAL DRIFT: H/480
   B. WALL FRAMING DEFECTION: H/240

DELEGATED ENGINEERED SYSTEMS

1. DESIGN RESPONSIBILITY FOR THE FOLLOWING STRUCTURAL ENGINEERED SYSTEMS AND COMPONENT PARTS IS DELEGATED TO A QUALIFIED DELEGATED REGISTERED PROFESSIONAL ENGINEER SELECTED BY THE CONTRACTOR. THIS LIST DOES NOT INCLUDE NON-STRUCTURAL ELEMENTS.

   A. PRECAST/PRESTRESSED CONCRETE PILES

2. REFER TO THIS SHEET FOR APPLICABLE DESIGN STANDARDS, LOADS, CRITERIA, AND SERVICEABILITY LIMITS.

3. INCLUDE SIGNED SEALS FOR WORK DESIGNED BY THE DELEGATED ENGINEER.

4. DO NOT START FABRICATION OF THE DELEGATED SYSTEM OR COMPONENT PART OR FIELD CONSTRUCTION AFFECTED BY THE SYSTEM OR COMPONENT PART WITHOUT SUBMITTAL APPROVAL BY THE CONTRACTING OFFICER.

GEOTECHNICAL INFORMATION

1. THE INFORMATION PROVIDED IN THE REPORT TITLED 'FINAL GEOTECHNICAL REPORT MILCON PROJECT P-171 WON 1737010 WEAPONS MAGAZINES, PHASE 3 YORKTOWN NAVAL WEAPONS STATION, YORKTOWN, VA', PREPARED BY NAVFAC MIDLANT, AND DATED SEPTEMBER 18, 2023 HAS BEEN USED FOR THE DESIGN OF THE FOUNDATIONS..

2. SHALLOW FOUNDATIONS (EXTERIOR MECHANICAL EQUIPMENT PADS): 500 PSF NET ALLOWABLE BEARING PRESSURE WITH 9" FROST PROTECTION DEPTH

3. ALLOWABLE (SERVICE-LEVEL) PILE DESIGN CAPACITIES ARE AS FOLLOWS:

   A. AXIAL COMPRESSION: 48 TONS
   B. AXIAL TENSION: 0 TONS. PILES ARE NOT SUBJECT TO AXIAL TENSION
   C. LATERAL: 4.5 TONS FOR 1/4-INCH DEFLECTION WITH A FREE-END PILE HEAD FIXITY CONDITION

PRECAST/PRESTRESSED CONCRETE PILES

1. USE 12-INCH SQUARE PRECAST/PRESTRESSED CONCRETE PILES COMPLYING WITH THE PRECAST CONCRETE INSTITUTE MNL-116. AND WITH THE FOLLOWING MATERIAL PROPERTIES:

   A. BASE BID LENGTH: DETERMINE USING FOLLOWING MINIMUM PILE TIP ELEVATIONS REFERENCING NAVD88, ROUNDING UP TO NEAREST WHOLE FOOT FOR EACH PILE AND ADDING 10 FEET FOR TEST PILES:

      a. SEGREGATION BUILDING 1 = 3.0 FEET
      b. SEGREGATION BUILDING 2 = -1.0 FEET

   B. CONCRETE: f'_c = 5000 PSI (MINIMUM)
   C. PRESTRESSING STEEL: ASTM A416, GRADE 270 SEVEN-WIRE STRESS RELIEVED OR LOW RELAXATION STRANDS
   D. REINFORCING STEEL: ASTM A615, F_y = 60 KSI
   E. SPIRAL TIES: ASTM A1064

2. DESIGN PILES FOR THE FOLLOWING FACTORED LOAD COMBINATIONS WHERE P_U = FACTORED CONCENTRIC AXIAL FORCE, M_U = FACTORED BENDING MOMENT AND V_U = FACTORED SHEAR IN THE PILE AND THE POINT OF FIXITY IS 8.7 FEET BELOW TOP OF PILE:

   A. 1.2D+1.0L+1.0W: P_U = 135 KIPS, M_U = 24 FT-KIPS AND V_U = 15 KIPS

3. DRIVE (5) TEST (INDICATOR) PILES AT LOCATIONS SHOWN ON THE FOUNDATION PLAN AS DIRECTED BY THE GOVERNMENT GEOTECHNICAL ENGINEER AND CONTRACTING OFFICER.

4. DRIVE PILES WITH A VARIATION OF NOT MORE THAN THE FOLLOWING WITHIN LOCATION/ELEVATION/ORIENTATION INDICATED. WHERE INDIVIDUAL PILES OR PILE GROUPS EXCEED THESE TOLERANCES, PROVIDE CORRECTIVE ACTION TO ENSURE PILE CAPACITIES ARE NOT EXCEEDED.

   A. LONGITUDINAL AXIS: 2 PERCENT FROM VERTICAL
   B. PLAN ROTATION: 10 DEGREES
   C. PLAN OFFSET:
      a. INDIVIDUAL PILE BUTTS: +/-3" IN TWO PERPENDICULAR DIRECTIONS
      b. PILE GROUP CENTER OF GRAVITY:
         - P-4 PILE CAPS/PARALLEL TO CONTINUOUS PILE CAP AXIS: +/-2"
         - PERPENDICULAR TO CONTINUOUS PILE CAP AXIS: +/-1"
   D. PILE BUTT ELEVATION: +0"/-2"

CAST-IN-PLACE CONCRETE

1. CONCRETE: NORMAL WEIGHT WITH A MINIMUM 28-DAY COMPRESSIVE STRENGTH OF 5000 PSI FOR SLABS AND 4000 PSI FOR OTHER CONCRETE.

2. FORMWORK:

   A. COORDINATE CONCRETE WORK WITH THE PLACEMENT OF PIPING, INSERTS, FLOOR DRAINS, CHAMFER STRIPS, REGLETS AND OTHER EMBEDDED ITEMS.
   B. DO NOT EMBED MECHANICAL, ELECTRICAL, PLUMBING AND OTHER UTILITIES IN CONCRETE SLABS AND WALLS.
   C. ACCURATELY PLACE, SUPPORT AND SECURE EMBEDDED ITEM SUCH AS ANCHOR RODS AND WELD PLATES BEFORE PLACING CONCRETE TO PREVENT DISPLACEMENT OF EMBEDDED ITEM BEYOND PERMITTED TOLERANCES.
   D. SLEEVE PIPING OR UTILITIES PASSING THROUGH CONCRETE TO MAINTAIN 1" CLEAR ALL AROUND, UNLESS NOTED OTHERWISE. REFER TO OTHER DISCIPLINE DRAWINGS FOR SLEEVE DETAILS. PROVIDE MEASURES TO ENSURE THAT SLEEVES REMAIN FREE OF DEBRIS AND WATER DURING CONSTRUCTION. DO NOT SLEEVE THROUGH PILE CAPS.
   E. PROVIDE 3/4" CHAMFER STRIPS ON EDGES OF EXPOSED CONCRETE, UNLESS NOTED OTHERWISE.
   F. DO NOT EARTH-FORM FOUNDATIONS.
   G. LOCATE CONSTRUCTION, CONTRACTION, ISOLATION, EXPANSION, AND OTHER JOINTS AS INDICATED OR SPECIFIED, OR OTHERWISE APPROVED.

3. REINFORCING STEEL:

   A. BARS: ASTM A615 GRADE 60. SHOP FABRICATE BENT AND HOOKED BARS.
   B. HEADED DEFORMED BARS: ASTM A970 INCLUDING ANNEX A1 REQUIREMENTS FOR CLASS HA HEAD DIMENSIONS.
   C. WELDED WIRE REINFORCEMENT: ASTM A1064, SHEET TYPE ONLY.
   D. DETAIL AND PLACE REINFORCEMENT IN ACCORDANCE WITH THE AMERICAN CONCRETE INSTITUTE ACI SP-66, ACI 301 AND ACI 318, AND THE CONCRETE REINFORCING STEEL INSTITUTE CRSI MANUAL OF STANDARD PRACTICE.
   E. REINFORCING BAR SUPPORTS: CONFORM TO CRSI RB4.1. USE WIRE OR COMPOSITE BAR SUPPORTS. PRECAST CONCRETE BAR SUPPORTS ARE ACCEPTABLE FOR FOUNDATIONS BUT NOT SLABS AND OTHER CONCRETE ELEMENTS. FOR PRECAST BAR SUPPORTS, USE SUPPORTS SPECIFICALLY MANUFACTURED FOR REINFORCING SUPPORT WITH A MINIMUM CONCRETE COMPRESSIVE STRENGTH EQUAL TO OR GREATER THAN CONCRETE ELEMENT INTO WHICH IT IS PLACED. DO NOT PLACE PRECAST CONCRETE BAR SUPPORTS ON TOP OF OR CLOSER THAN 18-INCHES FROM PILES.
   F. CONCRETE CLEAR COVER: UNLESS NOTED OTHERWISE, USE THE FOLLOWING MINIMUM CONCRETE CLEAR COVER OVER REINFORCEMENT:

      a. CAST AGAINST AND PERMANENTLY IN CONTACT WITH GROUND: 3"
      b. EXPOSED TO WEATHER OR IN DIRECT CONTACT WITH GROUND: 2"
      c. NOT EXPOSED TO WEATHER OR IN DIRECT CONTACT WITH GROUND:

         - ROOF SLABS AND WALLS (EXCEPT AT ROOF SLAB SOFFIT/WALL SURFACES AT UTILITY ROOMS): 3/4"
         - ROOF SLAB SOFFIT/WALL SURFACES AT UTILITY ROOMS: 1 1/2"
         - GROUND FLOOR SLABS: TOP = 1" AND BOTTOM = 1 1/2"
         - BEAMS AND COLUMNS: 1 1/2" TO STIRRUPS AND TIES

CAST-IN-PLACE CONCRETE CONTINUED

G. SPLICE AND DEVELOPMENT LENGTHS: PROVIDE REINFORCING WITH GREATEST LENGTHS PRACTICAL TO MINIMIZE SPLICES. DO NOT SPLICE WALL AND COLUMN VERTICAL REINFORCING. WHERE WALL HORIZONTAL REINFORCING SPLICES ARE REQUIRED, SPLICE BETWEEN AND NOT OVER OPENINGS AND STAGGER SPLICES 5'-0" MINIMUM. WHERE SLAB REINFORCING SPLICES ARE REQUIRED, SPLICE BOTTOM BARS OVER SUPPORTS AND TOP BARS MIDWAY BETWEEN SUPPORTS. UNLESS NOTED OTHERWISE, USE THE FOLLOWING EMBEDMENT AND LAP SPLICE LENGTHS FOR REINFORCING STEEL BARS ROUNDED UP TO THE NEAREST WHOLE INCH:

   a. MINIMUM STRAIGHT EMBEDMENT AND SPLICE LENGTHS: 48 BAR Ø
   b. MINIMUM STANDARD HOOK EMBEDMENT LENGTHS: 15 BAR Ø
   c. HOOK EMBEDMENT IS MINIMUM STRAIGHT LINE DISTANCE FROM CRITICAL SECTION OF BAR TO FARTHEST EDGE OF HOOK.

H. AT CONSTRUCTION JOINTS BETWEEN WALL/COLUMN AND FOUNDATION/SLAB ELEMENTS, PROVIDE CLEAN SURFACE FREE OF LAITANCE AND INTENTIONALLY ROUGHENED TO A FULL AMPLITUDE OF APPROXIMATELY 1/4".

MISCELLANEOUS METAL FABRICATIONS, LADDERS AND METAL RAILINGS

1. PROVIDE MATERIALS CONFORMING TO THE FOLLOWING:

   A. SHAPES (OTHER THAN W AND WT), PLATES, MISCELLANEOUS SHAPES AND THREADED RODS: ASTM A36, F_y = 36 KSI
   B. WIDE FLANGE SHAPES AND TEES: ASTM A992, F_y = 50 KSI
   C. PIPE: ASTM A53, TYPE E OR S, GRADE B, F_y=35 KSI
   D. HOLLOW STRUCTURAL SECTIONS: ASTM A1085, GRADE A, F_y = 50 KSI
   E. WELDING: AWS D1.1 USING E70 ELECTRODES WITH LOW HYDROGEN WHERE REQUIRED
   F. HEADED STUD CONNECTORS: AWS D1.1, TYPE B MADE FROM ASTM A108 MATERIAL WITH F_u=65 KSI
   G. STRUCTURAL BOLTS: ASTM A325, TYPE 1 WITH DIRECT TENSION INDICATOR WASHERS OR ASTM F1852, TYPE 1 TENSION CONTROL BOLTS
   H. CARBON STEEL BOLTS: ASTM A307, GRADE A
   I. POST-INSTALLED ANCHORS: USE ANCHORS WITH CHARACTERISTICS MEETING OR EXCEEDING THOSE IN REFERENCED ESR AS FOLLOWS.

      a. CONCRETE SCREW ANCHORS: CASE HARDENED CARBON STEEL SCREW BOLT WITH HEX HEAD AND SIZE INDICATED. EVALUATION SERVICE REPORT ESR-3889 WAS USED FOR THE BASIS OF DESIGN.
      b. ADHESIVE ANCHORS: CARBON STEEL ASTM F1554, GRADE 36 THREADED RODS OF SIZE INDICATED AND SET WITH ADHESIVE. EVALUATION SERVICE REPORT ESR-4868 WAS USED FOR THE BASIS OF DESIGN.

   J. ANCHOR RODS: ASTM F1554 GRADE 36
   K. GROUT: ASTM C1107 CEMENTITIOUS NONSHRINK
   L. STEEL BAR GRATING: CONSTRUCTION TYPE, BAR SIZE AND FINISH AS INDICATED AND MANUFACTURED IN ACCORDANCE WITH NATIONAL ASSOCIATION OF ARCHITECTURAL METAL MANUFACTURERS (NAAMM) METAL BAR GRATING (MBG) 531.

2. USE STRUCTURAL BOLTS FOR MISCELLANEOUS METAL FABRICATION BOLTED CONNECTIONS EXCEPT WHERE SPECIFICALLY NOTED OTHERWISE. FULLY PRETENSION STRUCTURAL BOLTS.

3. LOCATE ANCHOR RODS, STEEL PLATES WITH HEADED STUD CONNECTORS AND OTHER EMBEDDED ITEMS ACCURATELY, SET WITH TEMPLATES, AND SECURELY HELD IN POSITION PRIOR TO AND WHILE PLACING CONCRETE. PROTECT EMBEDDED ITEMS FROM CONSTRUCTION ACTIVITY. DO NOT INSERT EMBEDDED ITEMS INTO FRESH OR PARTIALLY HARDENED CONCRETE. DO NOT SUBSTITUTE POST-INSTALLED ANCHORS FOR EMBEDDED ANCHOR RODS OR OTHER EMBEDDED ANCHORS.

4. HOT-DIP GALVANIZE MISCELLANEOUS METAL FABRICATIONS, LADDERS AND METAL RAILINGS AFTER FABRICATION.

LEGEND

CBAAXBB	CONCRETE BEAM MARK AA=WIDTH BB=DEPTH	DPX	DROP PANEL MARK X = WIDTH IN FEET
CPCAAXBB	CONTINUOUS PILE CAP MARK AA=WIDTH BB=DEPTH	UNO	UNLESS NOTED OTHERWISE
CCAAXBB	CONCRETE COLUMN MARK AA=WIDTH BB=DEPTH	OC	ON CENTER
CWXX	CONCRETE WALL MARK XX=WALL WIDTH		WORK NOTE
PCX	PILE CAP MARK X=NUMBER OF PILES		GRID MARK
TYP	TYPICAL	XXX	PILE LOCATION XXX=PILE NUMBER
	COMPACTED SUBGRADE	XXX-TPY	TEST PILE LOCATION XXX=PILE NUMBER Y=TEST PILE NUMBER
	POROUS FILL / STONE BASE COURSE		GROUND FLOOR SLAB JOINT - TYPE INDICATED ON PLAN
	CAST-IN-PLACE CONCRETE		TOPYY X' - X" TOP OF PARAPET TOSYY X' - X" TOP OF SLAB YY = HR FOR HIGH ROOF SLAB/PARAPET YY = LR FOR LOW ROOF SLAB/PARAPET YY = CR FOR CANOPY ROOF
	MASONRY VENEER		

SYM	DESCRIPTION	DATE	APPR

SEAL

A/E INFO

APPROVED
James E. Donahue, R.A.
FOR COMMANDER NAVFAC

ACTIVITY
Approved by LCDR VINCE DEL GRECO, ROICC with PWD YORKTOWN, via Email.

SATISFACTORY TO DATE 03/26/2026

DES DMS | DRW DMS | CHK WCT
PM/DM MME/WJW
BRANCH MANAGER CGM
CHIEF ENG/ARCH JWJ
FIRE PROTECTION HPN

DEPARTMENT OF THE NAVY
NAVAL FACILITIES ENGINEERING SYSTEMS COMMAND
MIDLANT DC CORE
NAVAL FACILITIES ENGINEERING SYSTEMS COMMAND - MID-ATLANTIC
NAVAL STATION - NORFOLK, VA
NAVAL WEAPONS STATION YORKTOWN, VIRGINIA
P171 WEAPON MAGAZINES
SEGREGATION FACILITIES
GENERAL NOTES AND LEGEND

SCALE: AS NOTED
EPROJECT NO.: 1737010
CONSTR. CONTR. NO. ##
NAVFAC DRAWING NO. 12942044
SHEET 378 OF 499
S-001A

DRAWFORM REVISION: 25 AUGUST 2020

4/7/2026 9:33:33 AM S-001A
C:\Users\david.sammons3\Documents\Revit Local Files\P171-1737010-S-R21-SEG_david.sammons3.rvt

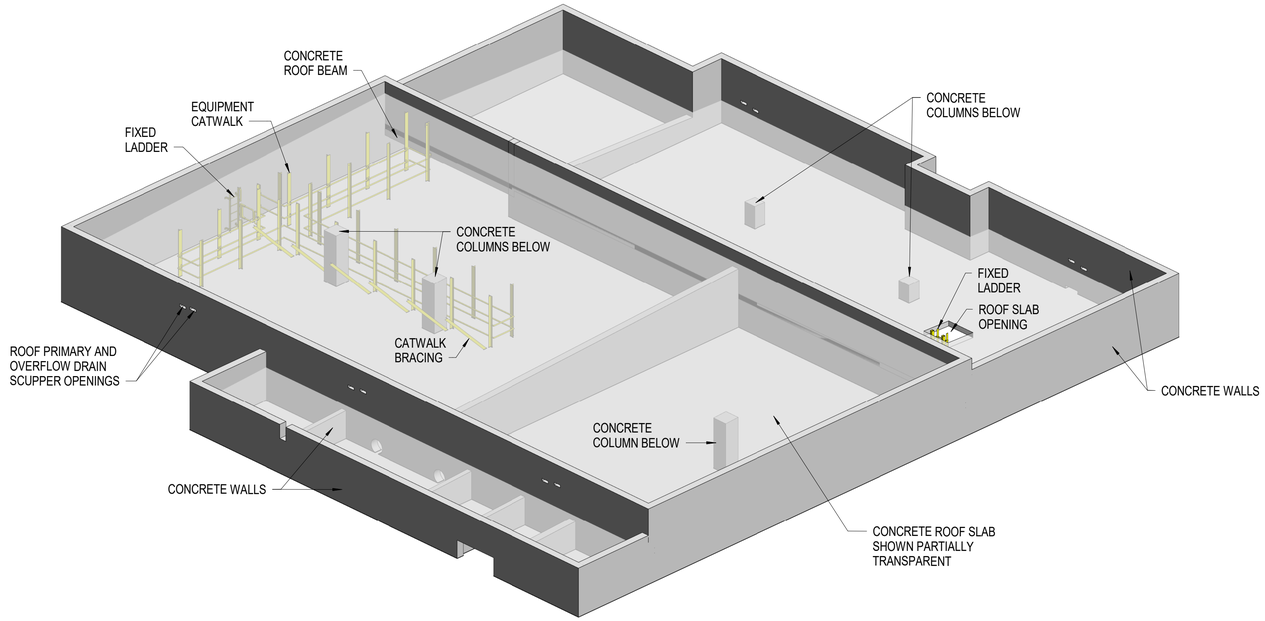

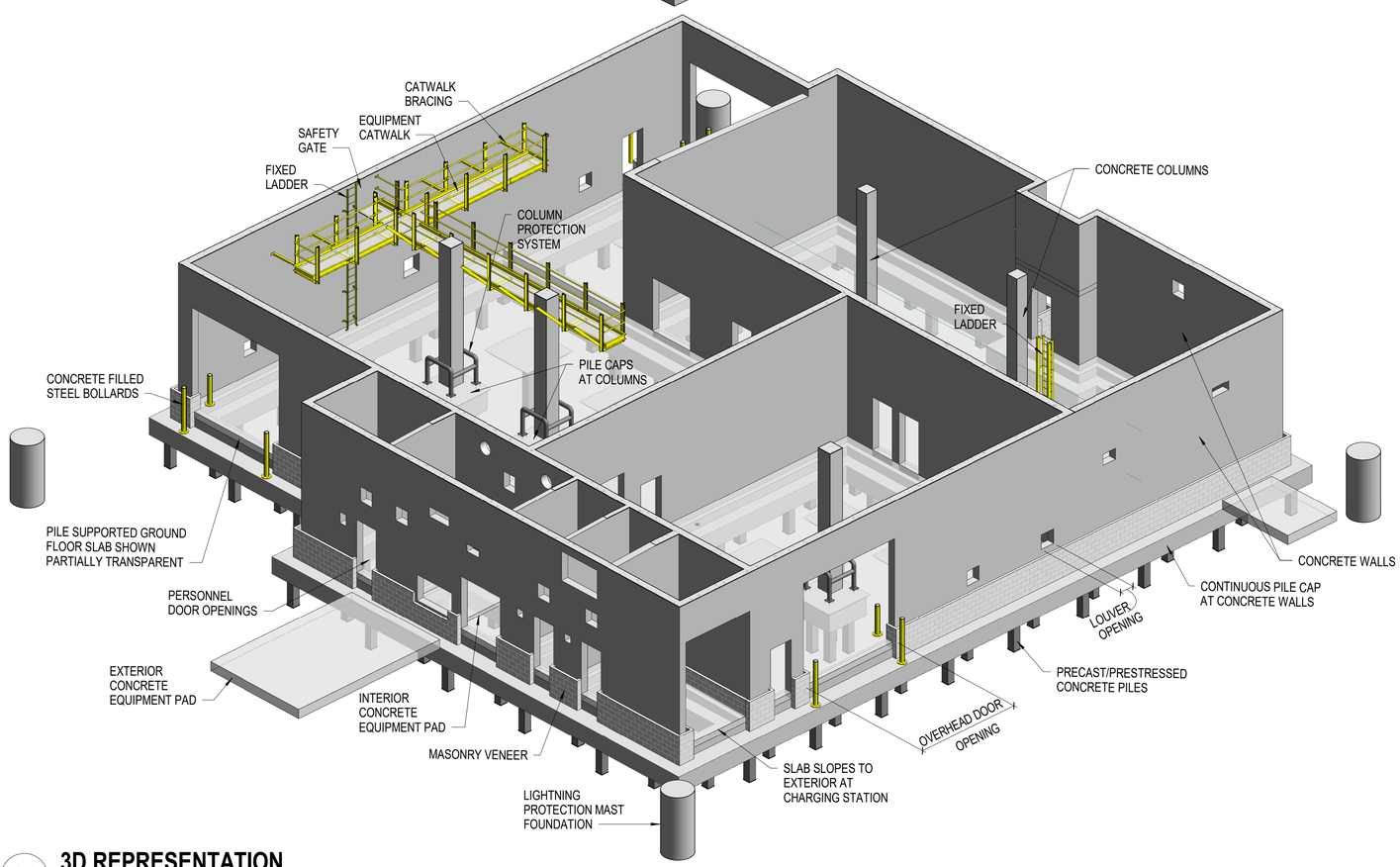

A1 **3D REPRESENTATION**

SCALE: NOT TO SCALE

GENERAL SHEET NOTES

A. REFER TO S-001A FOR GENERAL NOTES AND LEGEND.

B. THE 3D REPRESENTATION IS FOR GENERAL INFORMATION ONLY AND DOES NOT REPRESENT A COMPLETE AND DETAILED REPRESENTATION OF THE STRUCTURE. REFER TO PLANS, SECTIONS AND DETAILS FOR DETAILED INFORMATION NOT SHOWN IN THE 3D REPRESENTATION.

C. ARCHITECTURAL, MECHANICAL, ELECTRICAL, PLUMBING AND OTHER NON-STRUCTURAL ELEMENTS ARE NOT SHOWN IN THE 3D REPRESENTATION.

COMPONENTS AND CLADDING PRESSURES

1. USE WIND PRESSURES BELOW FOR THE DESIGN OF COMPONENTS AND CLADDING ELEMENTS OR RETAIN A PROFESSIONAL ENGINEER TO DETERMINE WIND PRESSURES FOR SPECIFIC EFFECTIVE WIND AREAS.
2. REFER TO DESIGN LOADS AND CRITERIA NOTES ON S-001A FOR WIND LOAD DESIGN CRITERIA.
3. WIND PRESSURES ARE STRENGTH LEVEL VALUES BASED ON THE BASIC DESIGN WIND SPEED (WIND LOAD FACTOR = 1.0). MULTIPLY PRESSURES BY 0.6 WHEN USING ALLOWABLE STRESS DESIGN METHODOLOGY.
4. PRESSURES ARE GROSS VALUES, DO NOT INCLUDE DEAD LOADS AND ARE TABULATED IN POUNDS PER SQUARE FOOT (PSF).
5. FOR ROOFS AND WALLS, PLUS AND MINUS SIGNS SIGNIFY PRESSURES ACTING TOWARD AND AWAY FROM THE SURFACES, RESPECTIVELY. FOR PARAPETS, PRESSURES ACT IN DIRECTION SHOWN IN ASCE 7-16 FIGURE 30.6-1.
6. DESIGN COMPONENTS AND CLADDING FOR THE MAXIMUM POSITIVE AND NEGATIVE WIND PRESSURES.
7. FOR COMPONENTS AND CLADDING NOT AFFECTED BY INTERNAL PRESSURE SUCH AS METAL WALL PANELS ATTACHED TO THE EXTERIOR SURFACES OF CONCRETE WALLS, DEDUCT 5 PSF INTERNAL PRESSURE FROM THE ABSOLUTE PRESSURE VALUES TABULATED BELOW EXCEPT DO NOT REDUCE BELOW 16 PSF.
8. LINEAR INTERPOLATION IS PERMITTED FOR INTERMEDIATE EFFECTIVE WIND AREAS.
9. BUILDING ZONES ARE DEFINED IN ASCE 7-16 FIGURES 30.3-1 FOR WALLS, 30.3-3 FOR ROOFS AND 30.6-1 FOR PARAPETS.
10. DETERMINE PARAPET PRESSURES IN ACCORDANCE WITH ASCE 7-16 FIGURE 30.6-1 USING THE WALL AND ROOF PRESSURES TABULATED BELOW.
11. FOR DESIGN OF DEFLECTION-CONTROLLED COMPONENTS AND CLADDING, MULTIPLY DESIGN WIND PRESSURES BY 0.42 TO CONVERT LOADING TO ALLOWABLE STRESS DESIGN VALUES FOR A 10-YEAR MEAN RETURN INTERVAL.

DESIGN WIND PRESSURES FOR ROOF COMPONENTS (PSF)								
ROOF ZONE	COMPONENT TRIBUTARY AREA (SQFT)							
	10		50		200		500	
1	+16	-59	+16	-50	+16	-41	+16	-37
2	+34	-78	+30	-66	+27	-56	+25	-50
3	+34	-78	+30	-66	+27	-56	+25	-50

DESIGN WIND PRESSURES FOR WALL COMPONENTS (PSF)								
WALL ZONE	COMPONENT TRIBUTARY AREA (SQFT)							
	10		100		200		500	
4	+34	-37	+29	-32	+27	-30	+25	-28
5	+34	-45	+29	-35	+27	-32	+25	-28

FORKLIFT AXLE LOADS AND GEOMETRY

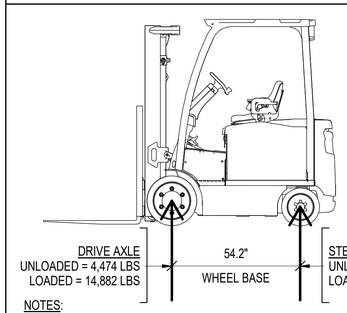

NOTES:
1. LOADS BASED ON HYSTER COMPANY FORKLIFT MODEL E60XN
2. RATED CAPACITY = 6,000 LBS
3. OVERALL WIDTH (WIDE TREAD) = 48.2"
4. WHEEL LOAD = 1/2 AXLE LOAD

SYM	DESCRIPTION	DATE	APPR

SEAL

A/E INFO

APPROVED

FOR COMMANDER NAVFAC

ACTIVITY
Approved by LCDR VINCE DEL GRECO, ROICC with PWD YORKTOWN, via Email.

SATISFACTORY TO DATE 03/26/2026

DES DMS DRW DMS CHK WCT

PM/DM MME/WJW

BRANCH MANAGER CGM

CHIEF ENG/ARCH JWJ

FIRE PROTECTION HPN

DEPARTMENT OF THE NAVY
NAVAL FACILITIES ENGINEERING SYSTEMS COMMAND
MIDLANT DC CORE
NAVAL FACILITIES ENGINEERING SYSTEMS COMMAND - MID-ATLANTIC
NAVAL STATION - NORFOLK, VA
NAVAL WEAPONS STATION
YORKTOWN, VIRGINIA
P171 WEAPON MAGAZINES
SEGREGATION FACILITIES
3D REPRESENTATION AND COMPONENTS AND CLADDING PRESSURES

SCALE: AS NOTED

EPROJECT NO.: 1737010

CONSTR. CONTR. NO. ##

NAVFAC DRAWING NO. 12942045

SHEET 379 OF 499

S-002A

DRAWFORM REVISION: 25 AUGUST 2020

4/7/2026 9:33:38 AM S-002A
C:\Users\david.sammons3\Documents\Revit Local Files\P171-1737010-S-R21-SEG_david.sammons3.rvt

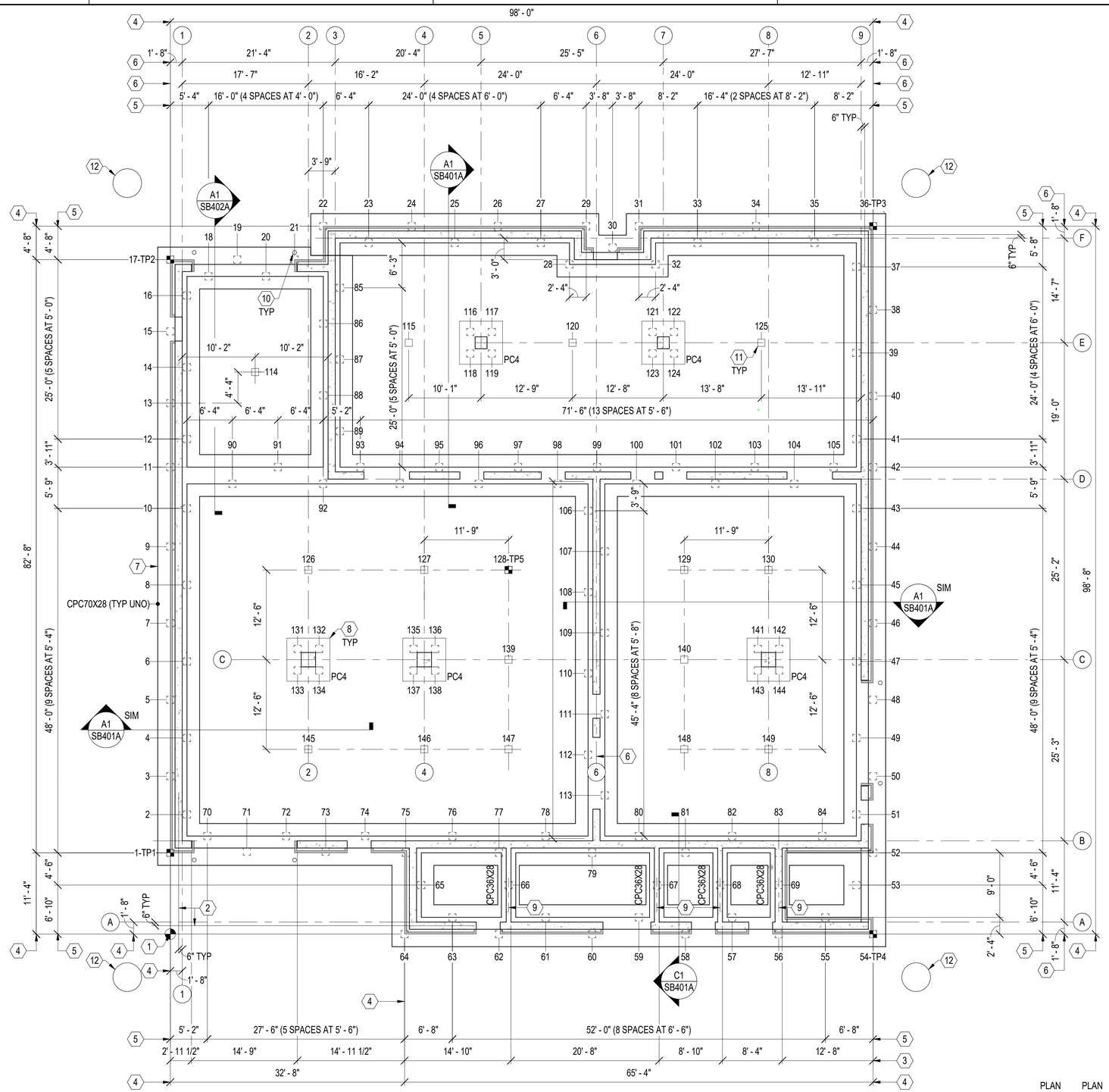

A1 PLAN - FOUNDATION

SCALE: 1/8" = 1'-0"

GENERAL SHEET NOTES

A. REFER TO S-001A FOR GENERAL NOTES AND LEGEND, SB501A AND SB502A FOR FOUNDATION DETAILS AND SF501A FOR CONCRETE COLUMN AND WALL DETAILS.

B. GROUND FLOOR SLABS ARE NOT SHOWN ON FOUNDATION PLAN. REFER TO SB102A FOR GROUND FLOOR SLAB PLAN.

C. COLUMN AND WALL MARKS ARE NOT SHOWN ON FOUNDATION PLAN. REFER TO SB102A FOR MARKS.

D. COORDINATE BELOW GRADE UTILITIES CROSSING FOUNDATIONS SO THAT UTILITIES ARE ABOVE OR BELOW PILE CAPS, DO NOT PENETRATE THROUGH PILE CAPS AND ARE AT LEAST 1'-0" AWAY FROM FACE OF PILES.

E. PROVIDE 6-INCH DEPTH NO. 67 STONE BASE COURSE BENEATH FOUNDATIONS.

KEYNOTES

1 PROJECT BASE POINT/WORK POINT ORIGIN (0,0) DEFINED BY INTERSECTION OF PLAN SOUTH AND WEST WALL EXTERIOR FINISHED FACES.

2 CONCRETE WALL CENTERLINE DIMENSIONS.

3 FACE OF CONCRETE WALL DIMENSIONS.

4 FACE OF MASONRY VENEER DIMENSIONS.

5 PILE CENTERLINES DIMENSIONS ALONG CONTINUOUS PILE CAP.

6 GRID LINE AND/OR CONCRETE WALL CENTERLINE DIMENSIONS.

7 TOP OF CONTINUOUS PILE CAP ELEVATION IS 2'-0" BELOW TOP OF REFERENCED GROUND FLOOR SLAB ELEVATION 0'-0" UNLESS NOTED OTHERWISE.

8 TOP OF PILE CAP ELEVATION IS 1'-2" BELOW TOP OF REFERENCED GROUND FLOOR SLAB ELEVATION 0'-0" UNLESS NOTED OTHERWISE.

9 ALIGN PILE CENTERLINE WITH CONCRETE WALL CENTERLINE.

10 CONCRETE FILLED STEEL HSS BOLLARDS AT OVERHEAD DOORS. REFER TO SB502A FOR DETAILS AND SB102A FOR LOCATIONS.

11 PRECAST CONCRETE PILE - REFER TO GROUND FLOOR SLAB PLAN FOR SLAB DROP PANELS CAST MONOLITHIC WITH SLAB AT PILES SUPPORTING SLAB BETWEEN COLUMNS AND WALLS.

12 LIGHTNING MAST DRILLED SHAFT FOUNDATION - COORDINATE FOUNDATION LOCATION WITH THE CIVIL AND ELECTRICAL PLANS. REFER TO SB502A FOR DETAIL. LOCATE THE CLOSEST OUTSIDE EDGE OF THE DRILLED SHAFT FOUNDATIONS A MINIMUM OF 3 FEET HORIZONTALLY FROM THE OUTSIDE EDGE OF THE BUILDING FOUNDATION. PROVIDE THE DRILLED SHAFT FOUNDATIONS AFTER CONSTRUCTING THE BUILDING PILES AND FOUNDATIONS AND PRIOR TO CONSTRUCTING THE BUILDING SUPERSTRUCTURE. PROVIDE DRILLED SHAFTS WITH TEMPORARY STEEL CASING AND DRILLING SLURRY TO MITIGATE CONSTRUCTABILITY CONCERNS AND POTENTIAL IMPACTS TO THE BUILDING FOUNDATIONS.

GRAPHIC SCALE

1/8" = 1' - 0" 0 5' 10' 15' 30'

SYM	DESCRIPTION	DATE	APPR

SEAL

A/E INFO

APPROVED
FOR COMMANDER NAVFAC

ACTIVITY
Approved by LCDR VINCE DEL GRECO, ROICC with PWD YORKTOWN, via Email.

SATISFACTORY TO DATE 03/26/2026

DES DMS | DRW DMS | CHK WCT
PM/DM MME/WJW
BRANCH MANAGER CGM
CHIEF ENG/ARCH JWJ
FIRE PROTECTION HPN

DEPARTMENT OF THE NAVY
NAVAL FACILITIES ENGINEERING SYSTEMS COMMAND
MIDLANT DC CORE
NAVAL FACILITIES ENGINEERING SYSTEMS COMMAND - MID-ATLANTIC
NAVAL STATION - NORFOLK, VA
NAVAL WEAPONS STATION
YORKTOWN, VIRGINIA
P171 WEAPON MAGAZINES
SEGREGATION FACILITIES
PLAN - FOUNDATION

SCALE: AS NOTED
EPROJECT NO.: 1737010
CONSTR. CONTR. NO. ##
NAVFAC DRAWING NO. 12942046
SHEET 380 OF 499
SB101A

DRAWFORM REVISION: 25 AUGUST 2020

SB101A
4/7/2026 9:33:40 AM
C:\Users\david.sammons3\Documents\Revit Local Files\P171-1737010-S-R21-SEG_david.sammons3.rvt

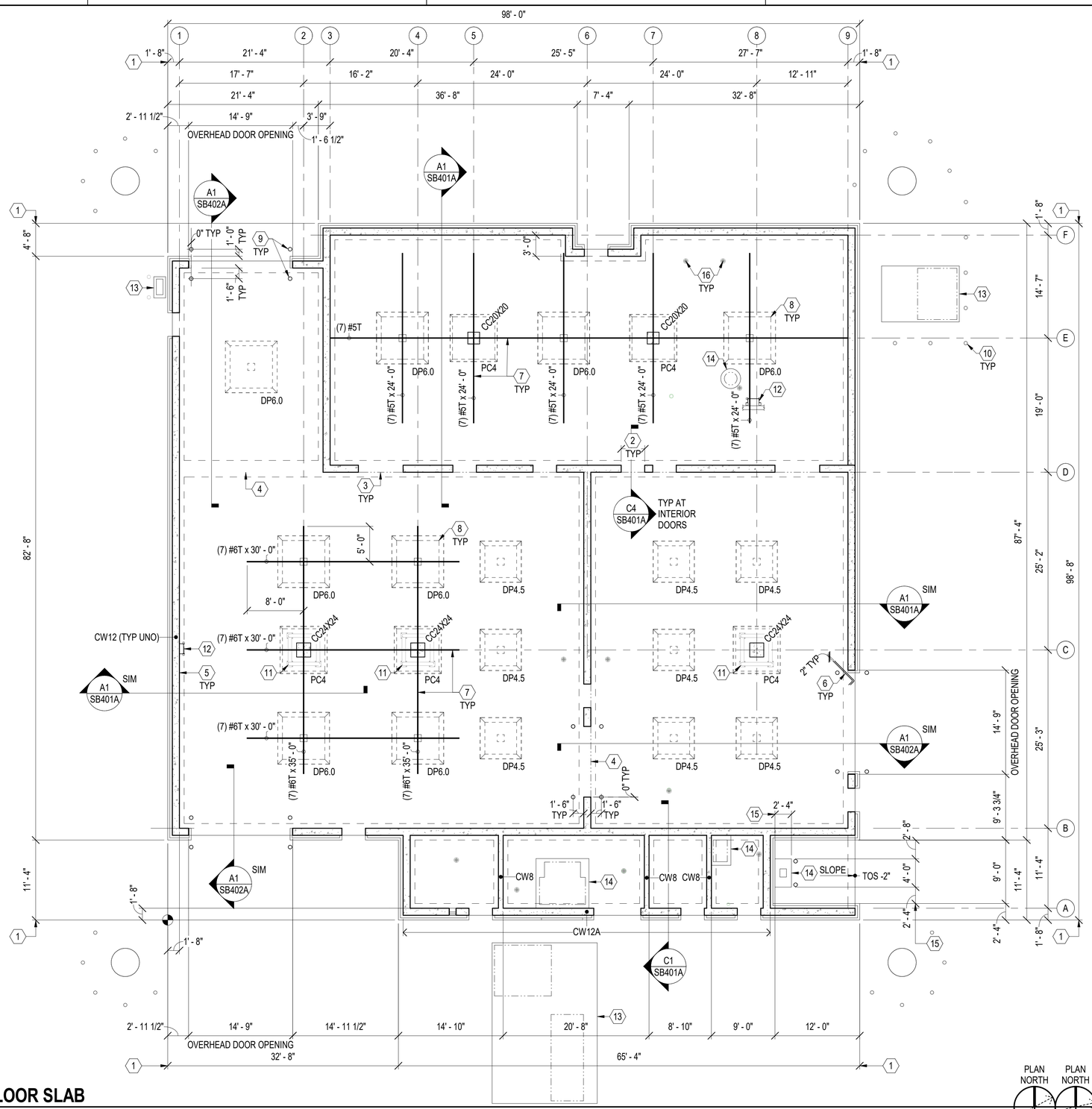

A1 PLAN - GROUND FLOOR SLAB

SCALE: 1/8" = 1'-0"

PLAN NORTH — BLDG 1 | PLAN NORTH — BLDG 2

GENERAL SHEET NOTES

A. REFER TO S-001A FOR GENERAL NOTES AND LEGEND, SB502A FOR GROUND FLOOR SLAB DETAILS AND SF501A FOR COLUMN/WALL DETAILS.

B. REFER TO FOUNDATION PLAN ON SB101A FOR DIMENSIONS AND FOUNDATION ELEMENTS NOT SHOWN OR ANNOTATED ON GROUND FLOOR SLAB PLAN.

C. GROUND FLOOR SLAB IS 10-INCH THICK CONCRETE SLAB PLACED OVER VAPOR BARRIER AND 8-INCH DEPTH OF POROUS FILL ON PREPARED SUBGRADE AND REINFORCED WITH UNIFORMLY SPACED TOP AND BOTTOM BARS EACH DIRECTION AS FOLLOWS:

CONTAINER TRANSFER/SEGREGATION AREAS: #6 AT 12" ON CENTER MAXIMUM WITH OUTER LAYERS PARALLEL TO LETTERED GRID LINES.

OTHER AREAS: #5 AT 12" ON CENTER MAXIMUM WITH OUTER LAYERS PARALLEL TO NUMBERED GRID LINES.

REFER TO SECTION A1/SB401A FOR REINFORCING PLACEMENT DETAILS. AT LOCATIONS SHOWN ON PLAN, PLACE ADDED TOP BARS BETWEEN UNIFORMLY SPACED REINFORCING SO THEY EXTEND EQUAL DISTANCE EACH SIDE OF PILE/PILE CAP CENTERLINE.

COORDINATE REINFORCING STEEL PLACEMENT WITH FLOOR DRAINS AND OTHER EMBEDDED ITEMS TO AVOID INTERRUPTING REINFORCING. OFFSET REINFORCING BARS TO CLEAR EMBEDDED ITEMS. COORDINATE REINFORCING STEEL PLACEMENT WITH POST INSTALLED ANCHOR LOCATIONS TO AVOID CUTTING REINFORCING STEEL DURING ANCHOR INSTALLATION. UNDER NO CIRCUMSTANCE IS IT ACCEPTABLE TO CUT REINFORCING STEEL.

PLACE FLOOR SLABS MONOLITHICALLY BETWEEN JOINTS SHOWN. DO NOT ADD CONSTRUCTION JOINTS WITHOUT CONTRACTING OFFICER APPROVAL.

COORDINATE SUPPORT FROM FLOOR SLABS FOR BELOW SLAB UTILITIES WITH MECHANICAL, ELECTRICAL, PLUMBING, FIRE PROTECTION AND OTHER REQUIREMENTS.

KEYNOTES

1 FACE OF MASONRY VENEER.

2 CONCRETE WALL OPENING. REFER TO ARCHITECTURAL DRAWINGS FOR SIZE AND LOCATION.

3 CONSTRUCTION JOINT WITH JOINT SEALANT AT PERSONNEL DOORS THROUGH INTERIOR CONCRETE WALLS.

4 DOWELED CONSTRUCTION JOINT WITH SEMI-RIGID JOINT FILLER.

5 1/2-INCH PREMOLDED EXPANSION JOINT MATERIAL FULL DEPTH OF SLAB BETWEEN SLAB EDGE AND FACE OF WALL.

6 (2) #5 X 4'-0" LONG AT REENTRANT SLAB CORNERS. PLACE DIRECTLY BELOW SLAB TOP REINFORCING. TERMINATE WITH STANDARD HOOK WHERE REINFORCING CANNOT BE PLACED SYMMETRIC ABOUT CORNER.

7 ADDED SLAB TOP REINFORCING OF QUANTITY, SIZE AND LENGTH INDICATED. REFER TO GENERAL SHEET NOTES THIS SHEET FOR REINFORCING PLACEMENT AND OTHER REQUIREMENTS.

8 SLAB DROP PANEL - REFER TO DETAIL ON SB501A.

9 CONCRETE FILLED STEEL HSS BOLLARDS AT OVERHEAD DOORS AND FORKLIFT CHARGING ROOM. REFER TO SB502A FOR DETAILS.

10 SITE CONCRETE EMBEDDED STEEL BOLLARDS - REFER TO CIVIL DRAWINGS FOR LOCATIONS AND DETAILS.

11 COLUMN PROTECTION SYSTEM - REFER TO ARCHITECTURAL DRAWINGS FOR DETAILS.

12 FIXED LADDER. REFER TO DETAIL ON SF402A.

13 CONCRETE EQUIPMENT PAD AT EXTERIOR EQUIPMENT. REFER TO SB502A FOR DETAIL. REFER TO MECHANICAL, ELECTRICAL AND PLUMBING DRAWINGS FOR EQUIPMENT.

14 CONCRETE EQUIPMENT PAD AT INTERIOR EQUIPMENT. REFER TO SB502A FOR DETAIL. REFER TO MECHANICAL, ELECTRICAL AND PLUMBING DRAWINGS FOR EQUIPMENT.

15 BATTERY CHARGER EQUIPMENT PAD DIMENSIONS.

16 FLOOR DRAIN OR CLEANOUT - COORDINATE WITH PLUMBING.

GRAPHIC SCALE

1/8" = 1' - 0" 0 5' 10' 15' 30'

SYM	DESCRIPTION	DATE	APPR

SEAL

A/E INFO

APPROVED

FOR COMMANDER NAVFAC

ACTIVITY: Approved by LCDR VINCE DEL GRECO, ROICC with PWD YORKTOWN, via Email.

SATISFACTORY TO DATE 03/26/2026

DES DMS | DRW DMS | CHK WCT

PM/DM MME/WJW

BRANCH MANAGER CGM

CHIEF ENG/ARCH JWJ

FIRE PROTECTION HPN

DEPARTMENT OF THE NAVY
NAVAL FACILITIES ENGINEERING SYSTEMS COMMAND
MID-ATLANTIC DC CORE
NAVAL FACILITIES ENGINEERING SYSTEMS COMMAND - MID-ATLANTIC
NAVAL STATION - NORFOLK, VA
NAVAL WEAPONS STATION YORKTOWN, VIRGINIA
P171 WEAPON MAGAZINES SEGREGATION FACILITIES
PLAN - GROUND FLOOR SLAB

SCALE: AS NOTED

EPROJECT NO.: 1737010

CONSTR. CONTR. NO. ##

NAVFAC DRAWING NO. 12942047

SHEET 381 OF 499

SB102A

DRAWFORM REVISION: 25 AUGUST 2020

SB102A
4/7/2026 9:33:40 AM
C:\Users\david.sammons3\Documents\Revit\Local Files\P171-1737010-S-R21-SEG_david.sammons3.rvt

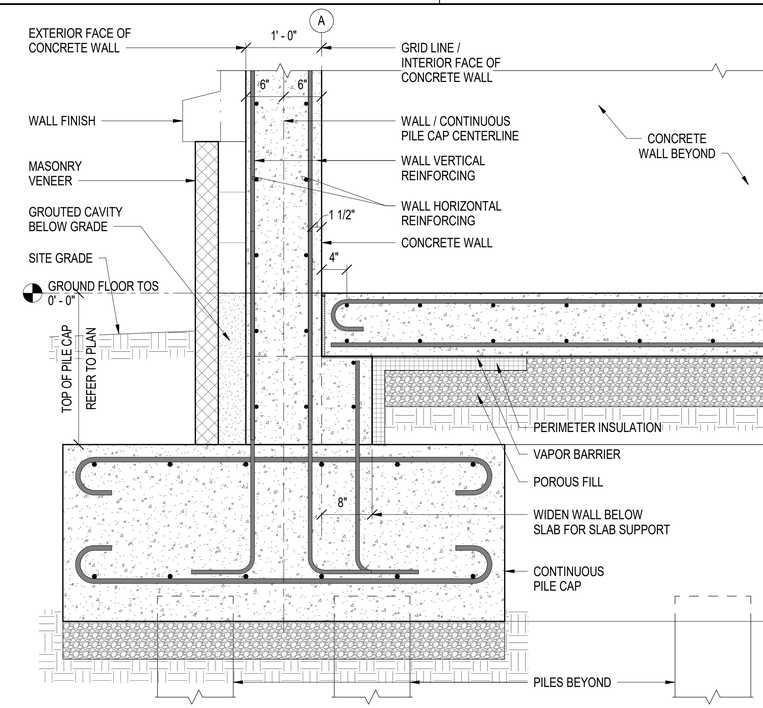

C1 SECTION

SCALE: 1" = 1'-0"

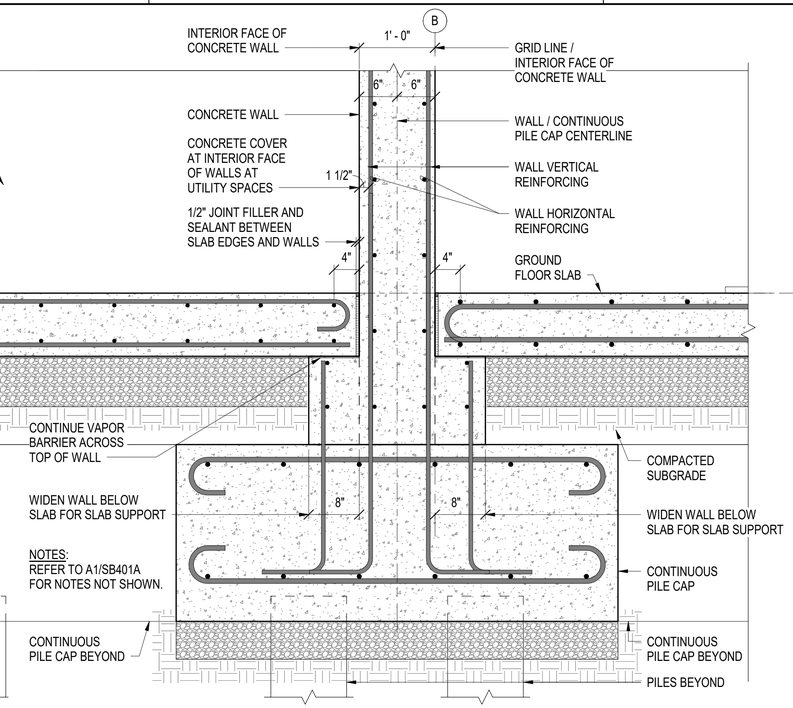

C4 SECTION

SCALE: 1" = 1'-0"

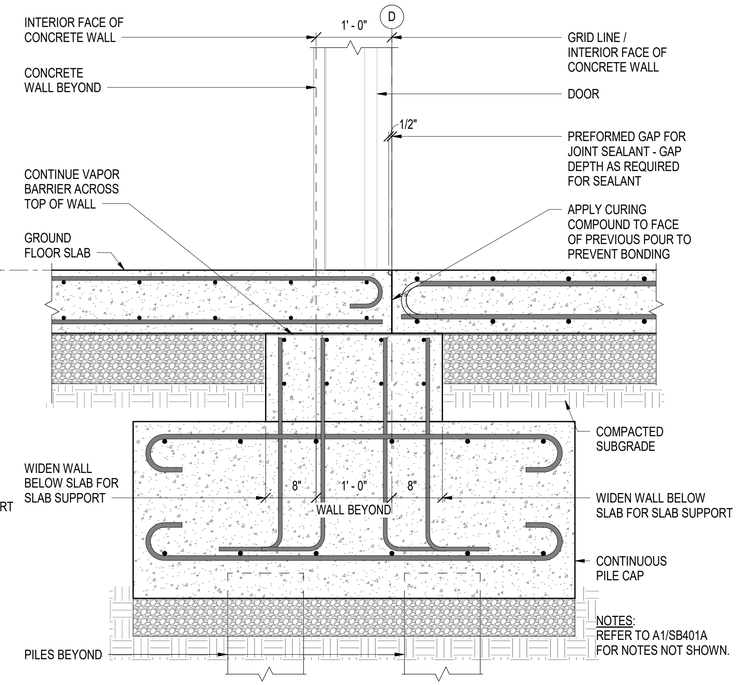

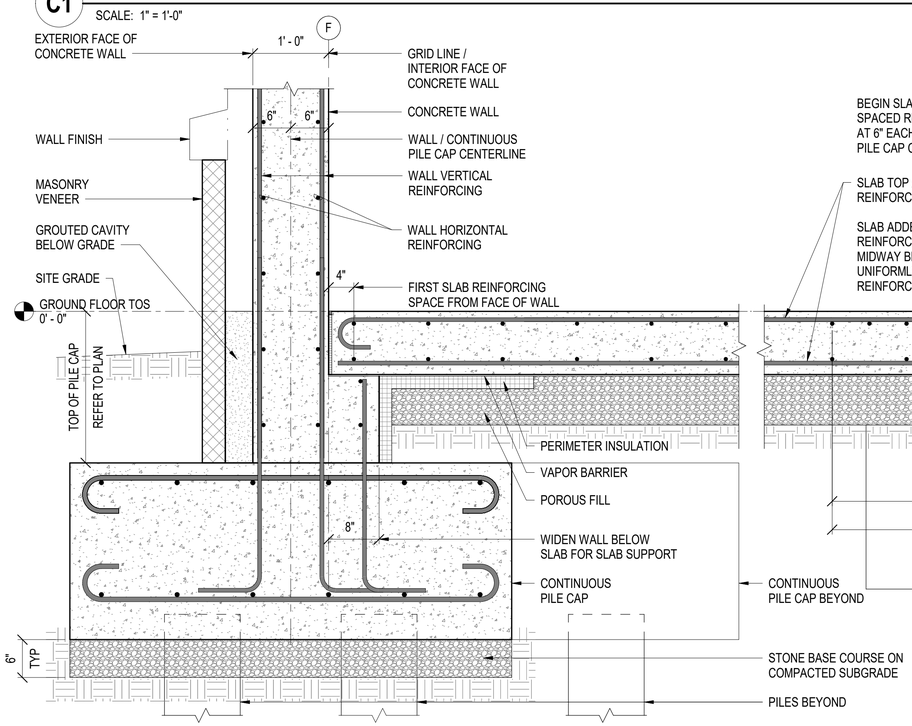

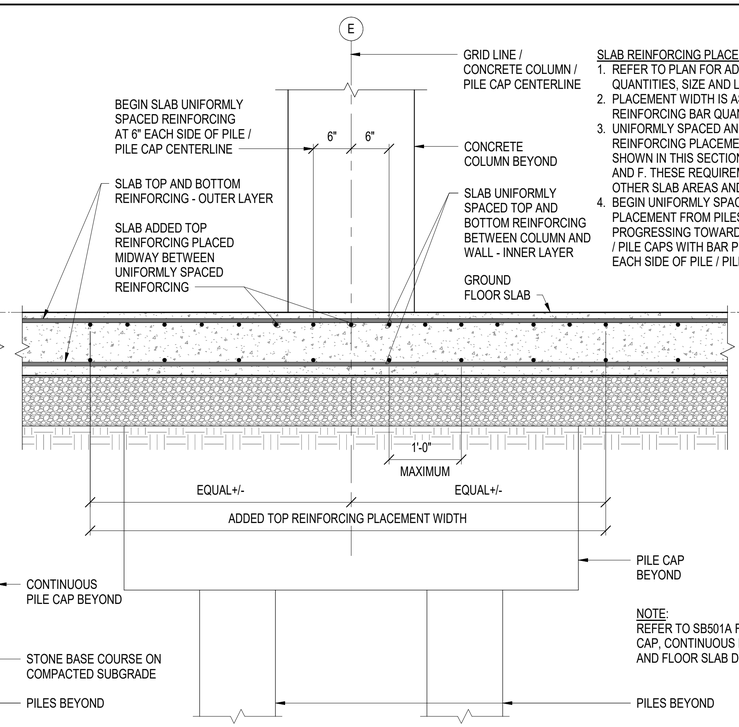

SLAB REINFORCING PLACEMENT NOTES:

1. REFER TO PLAN FOR ADDED REINFORCING QUANTITIES, SIZE AND LOCATIONS.
2. PLACEMENT WIDTH IS AS REQUIRED FOR ADDED REINFORCING BAR QUANTITY.
3. UNIFORMLY SPACED AND ADDED SLAB REINFORCING PLACEMENT REQUIREMENTS ARE SHOWN IN THIS SECTION BETWEEN GRID LINES D AND F. THESE REQUIREMENTS ALSO APPLY FOR OTHER SLAB AREAS AND SPAN DIRECTIONS.
4. BEGIN UNIFORMLY SPACED REINFORCING PLACEMENT FROM PILES / PILE CAPS AND PROGRESSING TOWARDS WALLS / ADJACENT PILES / PILE CAPS WITH BAR PLACEMENT STARTING AT 6" EACH SIDE OF PILE / PILE CAP CENTERLINES.

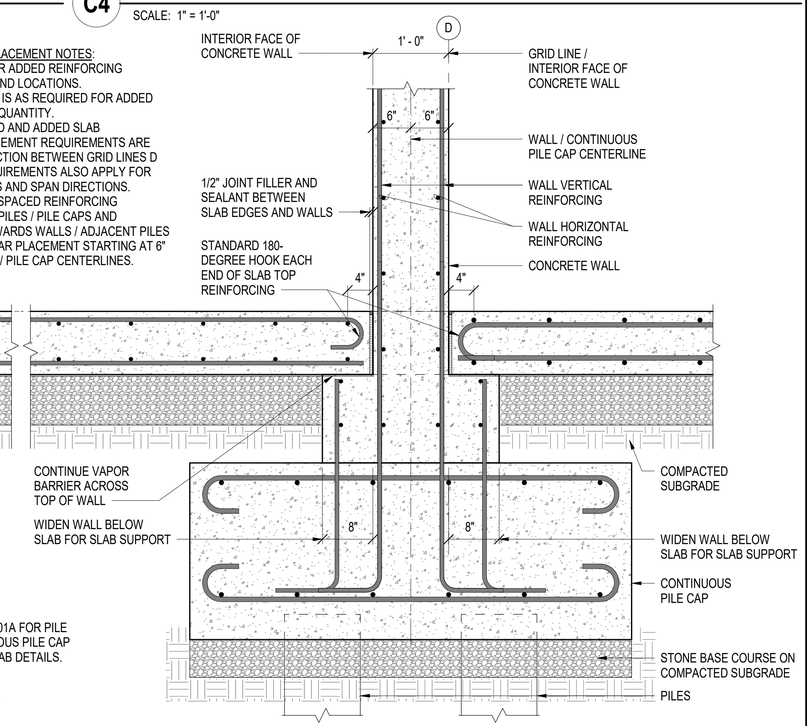

A1 SECTION

SCALE: 1" = 1'-0"

GRAPHIC SCALE

1" = 1' - 0" 0 6" 1' 2' 3'

SYM	DESCRIPTION	DATE	APPR

A/E INFO

APPROVED

FOR COMMANDER NAVFAC

ACTIVITY: Approved by LCDR VINCE DEL GRECO, ROICC with PWD YORKTOWN, via Email.

SATISFACTORY TO DATE 03/26/2026

DES DMS | DRW DMS | CHK WCT

PM/DM MME/WJW

BRANCH MANAGER CGM

CHIEF ENG/ARCH JWJ

FIRE PROTECTION HPN

DEPARTMENT OF THE NAVY
NAVAL FACILITIES ENGINEERING SYSTEMS COMMAND
MIDLANT DC CORE

NAVAL FACILITIES ENGINEERING SYSTEMS COMMAND - MID-ATLANTIC
NAVAL STATION - NORFOLK, VA

NAVAL WEAPONS STATION YORKTOWN, VIRGINIA

P171 WEAPON MAGAZINES SEGREGATION FACILITIES

SECTIONS - FOUNDATION AND FLOOR SLAB

SCALE: AS NOTED

EPROJECT NO. 1737010

CONSTR. CONTR. NO. ##

NAVFAC DRAWING NO. 12942048

SHEET 382 OF 499

SB401A

DRAWFORM REVISION: 25 AUGUST 2020

4/7/2026 9:33:42 AM SB401A
C:\Users\david.sammons3\Documents\Revit Local Files\P171-1737010-S-R21-SEG_david.sammons3.rvt

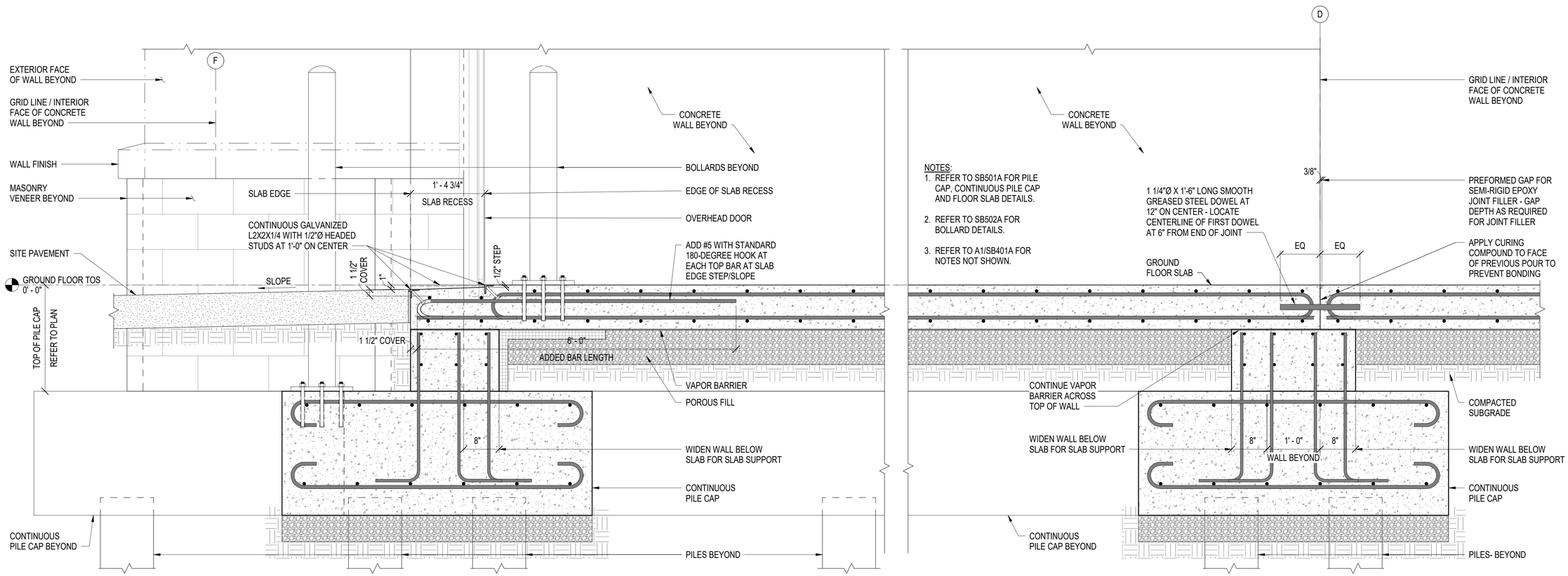

NOTES:

1. REFER TO SB501A FOR PILE CAP, CONTINUOUS PILE CAP AND FLOOR SLAB DETAILS.
2. REFER TO SB502A FOR BOLLARD DETAILS.
3. REFER TO A1/SB401A FOR NOTES NOT SHOWN.

A1 SECTION

SCALE: 1" = 1'-0"

GRAPHIC SCALE

1" = 1' - 0" 0 6" 1' 2' 3'

SYM	DESCRIPTION	DATE	APPR

SEAL

A/E INFO

APPROVED

FOR COMMANDER NAVFAC

ACTIVITY: Approved by LCDR VINCE DEL GRECO, ROICC with PWD YORKTOWN, via Email.

SATISFACTORY TO DATE: 03/26/2026

DES DMS | DRW DMS | CHK WCT

PM/DM: MME/WJW

BRANCH MANAGER: CGM

CHIEF ENG/ARCH: JWJ

FIRE PROTECTION: HPN

DEPARTMENT OF THE NAVY
NAVAL FACILITIES ENGINEERING SYSTEMS COMMAND
MIDLANT DC CORE

NAVAL FACILITIES ENGINEERING SYSTEMS COMMAND - MID-ATLANTIC
NAVAL STATION - NORFOLK, VA

NAVAL WEAPONS STATION YORKTOWN, VIRGINIA

P171 WEAPON MAGAZINES SEGREGATION FACILITIES

SECTIONS - FOUNDATION AND FLOOR SLAB

SCALE: AS NOTED

EPROJECT NO.: 1737010

CONSTR. CONTR. NO.: ##

NAVFAC DRAWING NO.: 12942049

SHEET 383 OF 499

SB402A

DRAWFORM REVISION: 25 AUGUST 2020

4/7/2026 9:33:43 AM
C:\Users\david.sammons3\Documents\Revit\Local Files\P171-1737010-S-R21-SEG_david.sammons3.rvt
SB402A

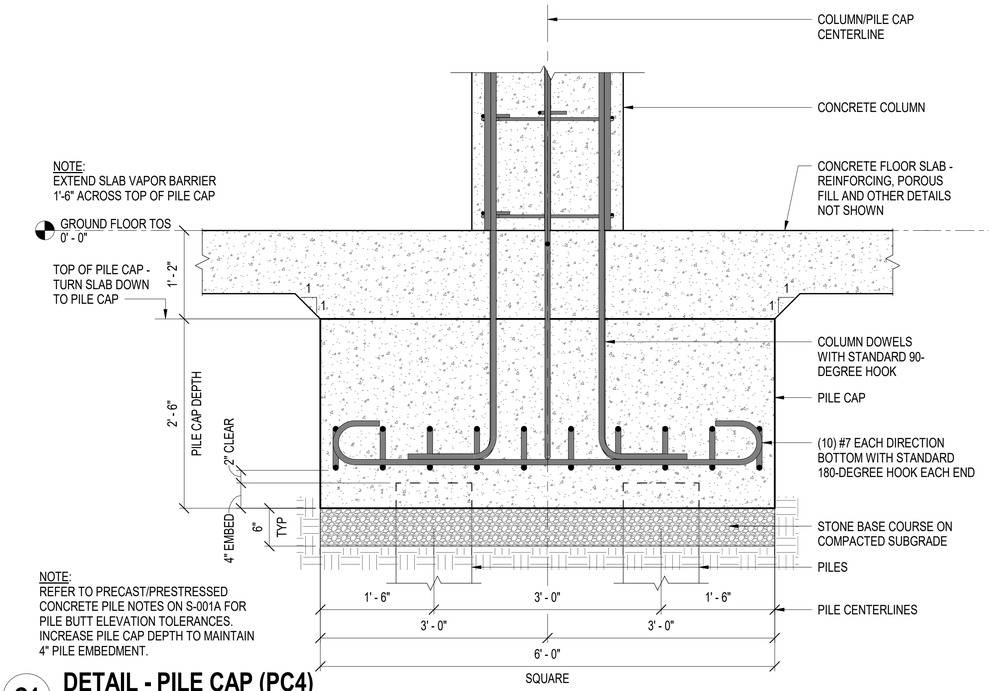

C1 DETAIL - PILE CAP (PC4)

SCALE: 1" = 1'-0"

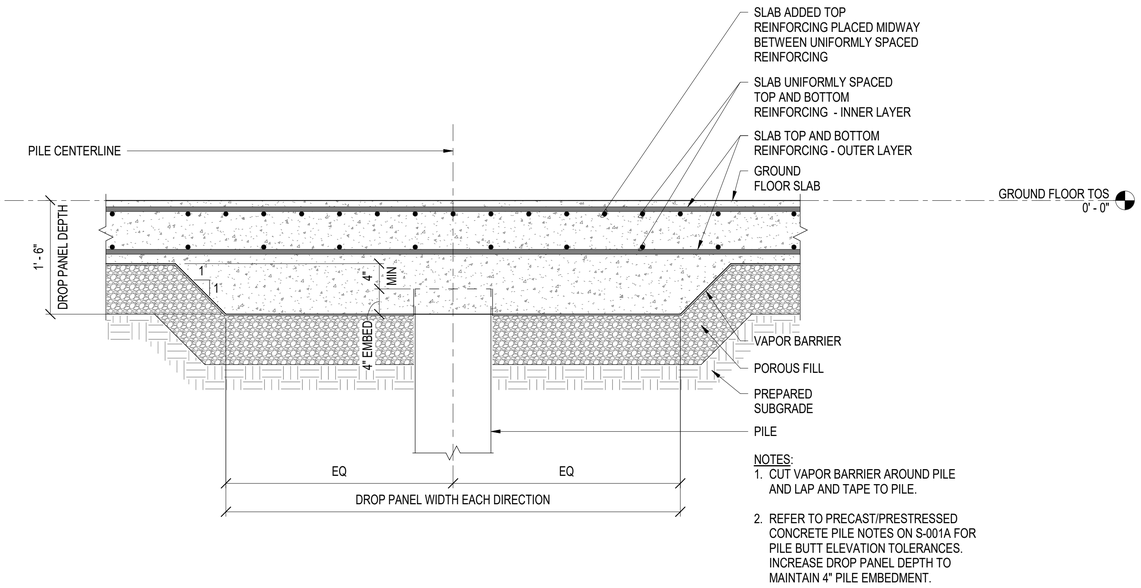

C3 DETAIL - SLAB DROP PANEL

SCALE: 1" = 1'-0"

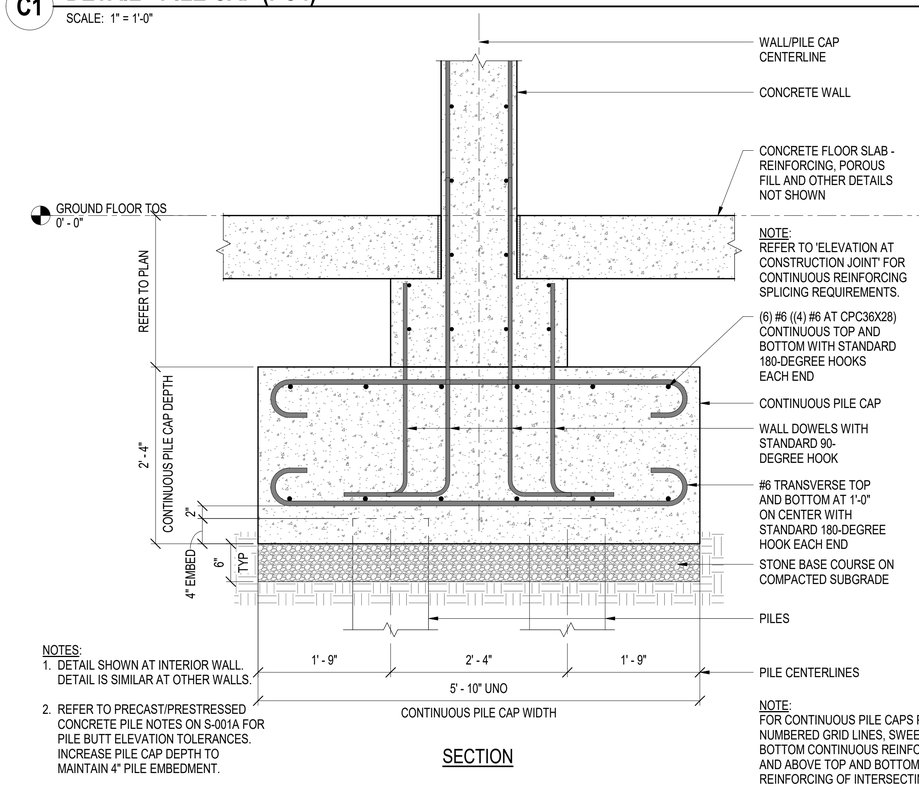

SECTION

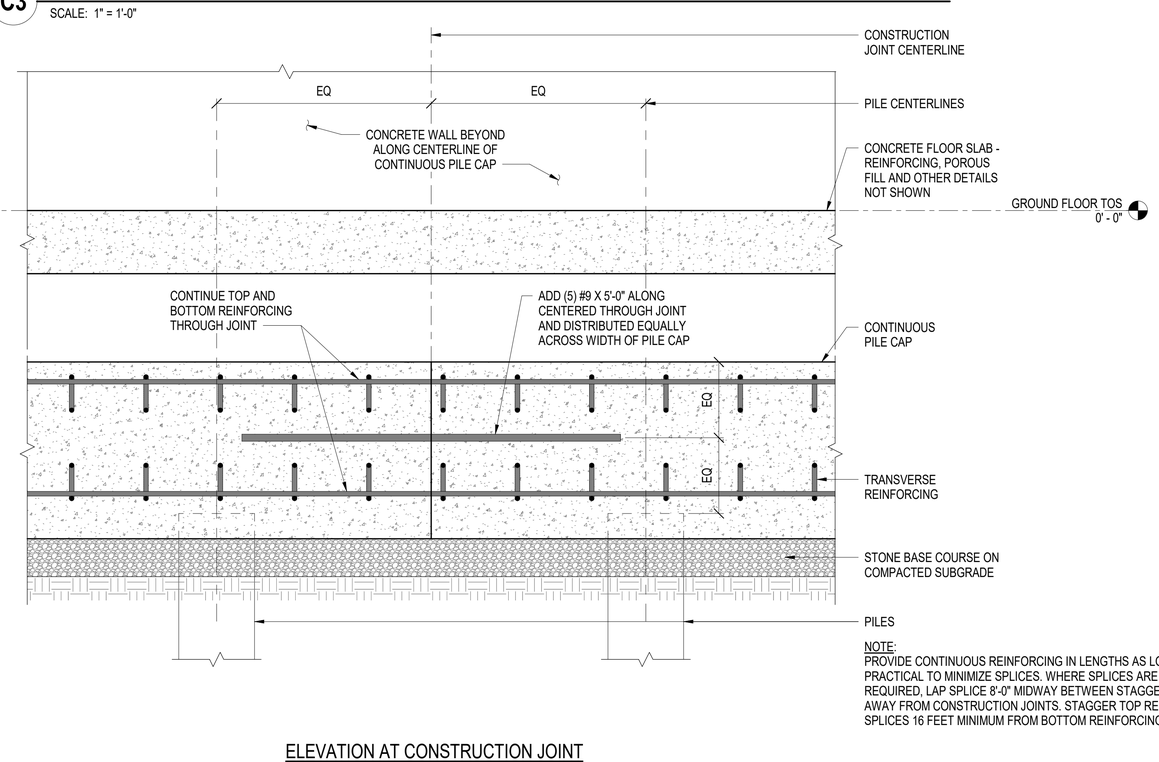

ELEVATION AT CONSTRUCTION JOINT

A1 DETAILS - CONTINUOUS PILE CAP (CPC70X28)

SCALE: 1" = 1'-0"

GRAPHIC SCALE

1" = 1' - 0" 0 6" 1' 2' 3'

SYM	DESCRIPTION	DATE	APPR

SEAL

A/E INFO

APPROVED

FOR COMMANDER NAVFAC:

ACTIVITY: Approved by LCDR VINCE DEL GRECO, ROICC with PWD YORKTOWN, via Email.

SATISFACTORY TO DATE: 03/26/2026

DES DMS | DRW DMS | CHK WCT

PM/DM: MME/WJW

BRANCH MANAGER: CGM

CHIEF ENG/ARCH: JWJ

FIRE PROTECTION: HPN

DEPARTMENT OF THE NAVY
NAVAL FACILITIES ENGINEERING SYSTEMS COMMAND
MIDLANT DC CORE
NAVAL FACILITIES ENGINEERING SYSTEMS COMMAND - MID-ATLANTIC
NAVAL STATION - NORFOLK, VA
NAVAL WEAPONS STATION YORKTOWN, VIRGINIA
P171 WEAPON MAGAZINES SEGREGATION FACILITIES
DETAILS - FOUNDATION AND FLOOR SLAB

SCALE: AS NOTED

EPROJECT NO.: 1737010

CONSTR. CONTR. NO.: ##

NAVFAC DRAWING NO.: 12942050

SHEET 384 OF 499

SB501A

DRAWFORM REVISION: 25 AUGUST 2020

4/7/2026 9:33:44 AM SB501A
C:\Users\david.sammons3\Documents\Revit Local Files\P171-1737010-S-R21-SEG_david.sammons3.rvt

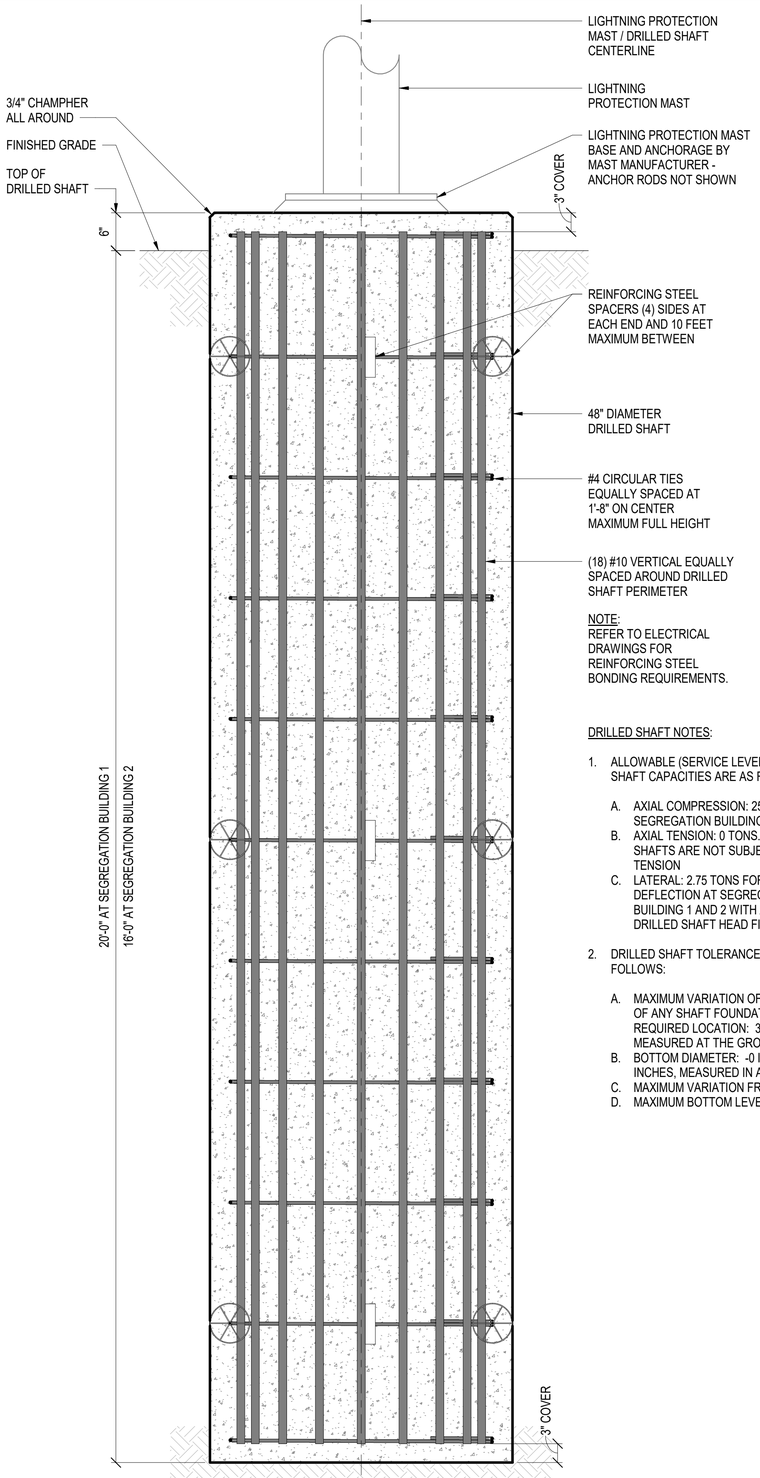

NOTE:
REFER TO ELECTRICAL DRAWINGS FOR REINFORCING STEEL BONDING REQUIREMENTS.

DRILLED SHAFT NOTES:

1. ALLOWABLE (SERVICE LEVEL) DRILLED SHAFT CAPACITIES ARE AS FOLLOWS:
   A. AXIAL COMPRESSION: 25 TONS AT SEGREGATION BUILDINGS 1 AND 2
   B. AXIAL TENSION: 0 TONS. DRILLED SHAFTS ARE NOT SUBJECT TO AXIAL TENSION
   C. LATERAL: 2.75 TONS FOR ¼ INCH DEFLECTION AT SEGREGATION BUILDING 1 AND 2 WITH A FREE HEAD DRILLED SHAFT HEAD FIXITY CONDITION
2. DRILLED SHAFT TOLERANCES ARE AS FOLLOWS:
   A. MAXIMUM VARIATION OF THE CENTER OF ANY SHAFT FOUNDATION FROM THE REQUIRED LOCATION: 3 INCHES, MEASURED AT THE GROUND SURFACE
   B. BOTTOM DIAMETER: -0 INCHES, +6 INCHES, MEASURED IN ANY DIRECTION.
   C. MAXIMUM VARIATION FROM PLUMB: 1:40
   D. MAXIMUM BOTTOM LEVEL: ±2 INCHES

A1 DETAIL - LIGHTNING PROTECTION MAST FOUNDATION

SCALE: 1" = 1'-0"

NOTE:
POST-INSTALLED ANCHORS ARE 3/4"Ø THREADED RODS SET IN CONCRETE WITH ADHESIVE.

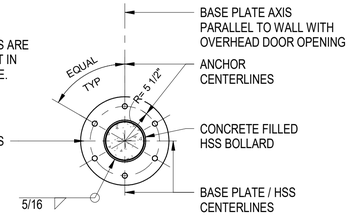

PLAN AT INTERIOR AND EXTERIOR

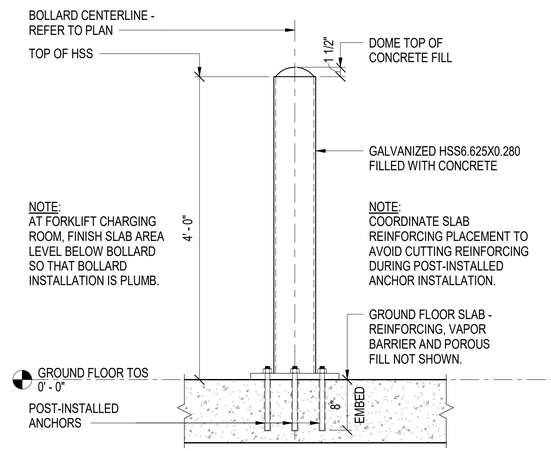

NOTE:
AT FORKLIFT CHARGING ROOM, FINISH SLAB AREA LEVEL BELOW BOLLARD SO THAT BOLLARD INSTALLATION IS PLUMB.

NOTE:
COORDINATE SLAB REINFORCING PLACEMENT TO AVOID CUTTING REINFORCING DURING POST-INSTALLED ANCHOR INSTALLATION.

GROUND FLOOR SLAB - REINFORCING, VAPOR BARRIER AND POROUS FILL NOT SHOWN.

SECTION AT INTERIOR AND FORKLIFT CHARGING ROOM

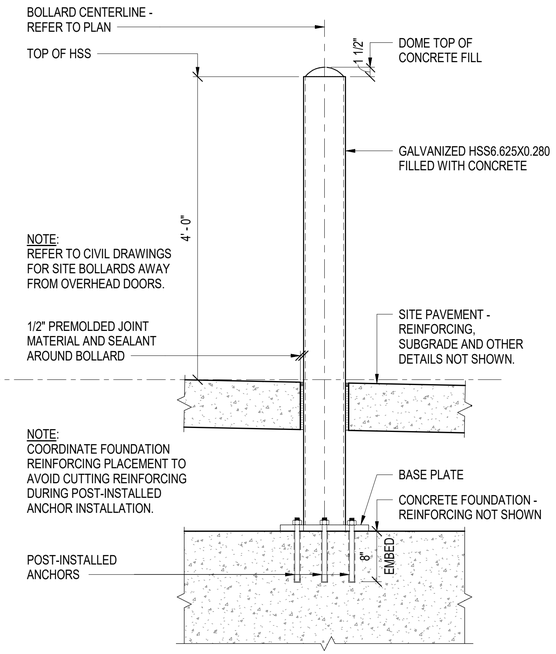

NOTE:
REFER TO CIVIL DRAWINGS FOR SITE BOLLARDS AWAY FROM OVERHEAD DOORS.

NOTE:
COORDINATE FOUNDATION REINFORCING PLACEMENT TO AVOID CUTTING REINFORCING DURING POST-INSTALLED ANCHOR INSTALLATION.

SECTION AT EXTERIOR SIDE OF OVERHEAD DOORS

B3 DETAILS - CONCRETE FILLED STEEL BOLLARD

SCALE: 1" = 1'-0"

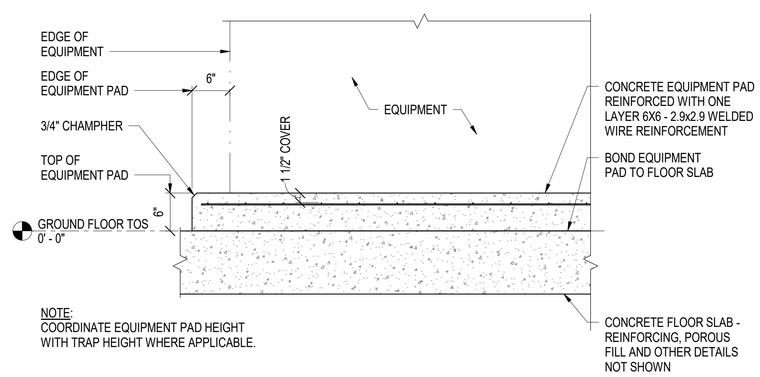

NOTE:
COORDINATE EQUIPMENT PAD HEIGHT WITH TRAP HEIGHT WHERE APPLICABLE.

AT INTERIOR

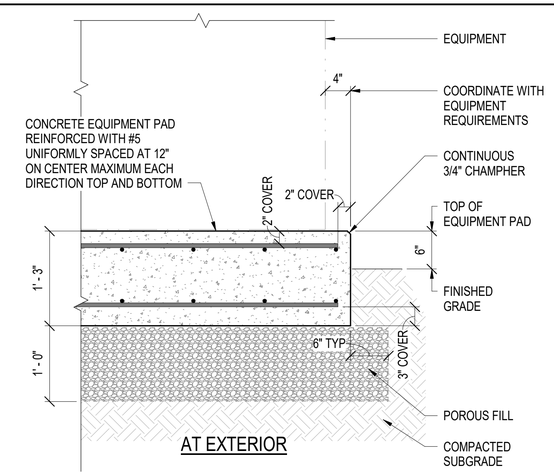

AT EXTERIOR

A3 DETAILS - CONCRETE EQUIPMENT PADS

SCALE: 1" = 1'-0"

GRAPHIC SCALE

1" = 1' - 0" 0 6" 1' 2' 3'

SYM	DESCRIPTION	DATE	APPR

SEAL

A/E INFO

APPROVED
FOR COMMANDER NAVFAC
ACTIVITY
Approved by LCDR VINCE DEL GRECO, ROICC with PWD YORKTOWN, via Email.
SATISFACTORY TO DATE 03/26/2026

DES DMS	DRW DMS	CHK WCT	
PM/DM	MME/WJW		
BRANCH MANAGER	CGM		
CHIEF ENG/ARCH	JWJ		
FIRE PROTECTION	HPN		

DEPARTMENT OF THE NAVY
NAVAL FACILITIES ENGINEERING SYSTEMS COMMAND
MIDLANT DC CORE
NAVAL FACILITIES ENGINEERING SYSTEMS COMMAND - MID-ATLANTIC
NAVAL STATION - NORFOLK, VA
NAVAL WEAPONS STATION
YORKTOWN, VIRGINIA
P171 WEAPON MAGAZINES
SEGREGATION FACILITIES
DETAILS - FOUNDATION AND FLOOR SLAB

SCALE: AS NOTED
EPROJECT NO.: 1737010
CONSTR. CONTR. NO. ##
NAVFAC DRAWING NO. 12942051
SHEET 385 OF 499
SB502A

DRAWFORM REVISION: 25 AUGUST 2020

4/7/2026 9:33:52 AM SB502A
C:\Users\david.sammons3\Documents\Revit Local Files\P171-1737010-S-R21-SEG_david.sammons3.rvt

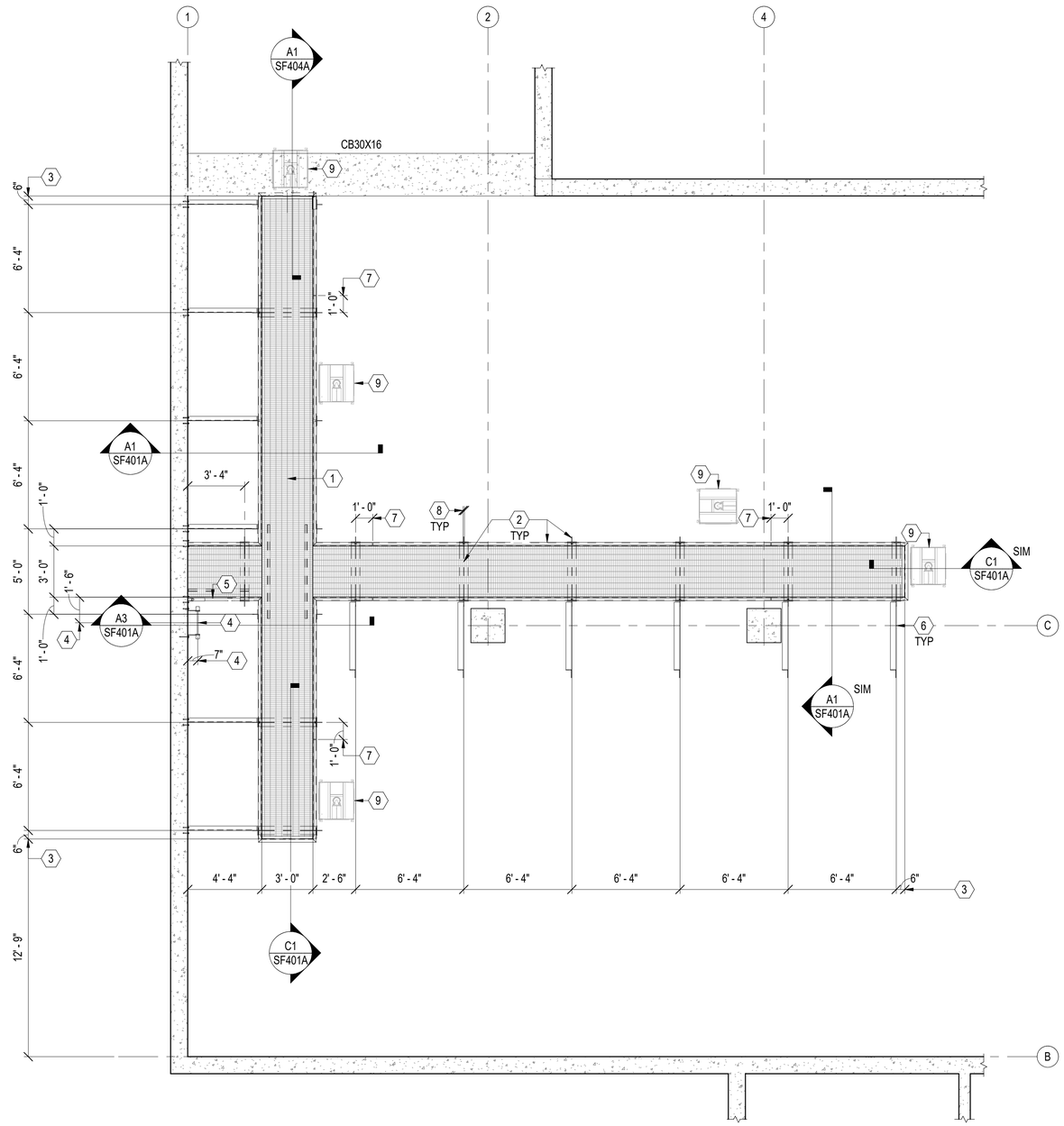

A1 PLAN - EQUIPMENT CATWALK FRAMING

SCALE: 1/4" = 1'-0"

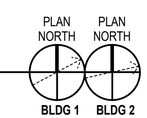

GENERAL SHEET NOTES

A. REFER TO S-001A FOR GENERAL NOTES AND LEGEND.

B. REFER TO FOUNDATION PLAN ON SB101A AND GROUND FLOOR SLAB PLAN ON SB102A FOR DIMENSIONS NOT SHOWN ON FRAMING PLAN.

KEYNOTES

1 GALVANIZED STEEL BAR GRATING TYPE 19W4 WITH 1/8" X 1" BEARING BARS. SPAN GRATING PERPENDICULAR TO SUPPORTING FRAMING AND ANCHOR TO STRUCTURAL MEMBERS WITH MANUFACTURER'S STANDARD CONNECTORS. BAND EDGES WITH BARS SAME SIZE AS BEARING BARS.

2 EQUIPMENT CATWALK HANGERS, FRAMING AND RAILING - REFER TO SECTIONS FOR SIZES AND DETAILS.

3 END OF GRATING / FACE OF CHANNEL / HANGER CENTERLINES.

4 FIXED LADDER / FIXED LADDER CENTERLINE. REFER TO DETAIL ON SF402A.

5 OCCUPATIONAL SAFETY AND HEALTH ADMINISTRATION (OSHA) COMPLIANT SELF-CLOSING SAFETY GATE AT FIXED LADDER ACCESS TO EQUIPMENT CATWALK. OPENING WIDTH IS 2'-6" MEASURED FROM FACE OF CONCRETE WALL TO RAILING EXTENSION.

6 L4X4X1/4 DIAGONAL BRACE FROM WT HANGER AT EQUIPMENT CATWALK TOP OF GRATING TO UNDERSIDE OF CONCRETE ROOF SLAB. REFER TO SECTION A1/SF401A FOR CONNECTION DETAILS SIMILAR TO L3X3X1/4 HORIZONTAL BRACE.

7 CHANNEL SPLICE LOCATIONS. CHANNELS ARE CONTINUOUS BETWEEN SPLICES AND MITERED AT CORNERS. REFER TO SECTIONS FOR SPLICE DETAIL.

8 1-INCH RAIL GAP LOCATIONS AT INTERMEDIATE HANGERS. RAILS ARE CONTINUOUS AT END AND CORNER HANGERS AND MITERED AT CORNERS. REFER TO SECTIONS FOR DETAILS.

9 EXHAUST REMOVAL MECHANICAL EQUIPMENT REQUIRING MAINTENANCE ACCESS. EQUIPMENT WEIGHT = 190 LBS PER UNIT. REFER TO MECHANICAL DRAWINGS. COORDINATE LOCATIONS WITH RAILINGS, HANGERS AND OTHER CONSTRUCTION TO ALLOW FOR EQUIPMENT MAINTENANCE.

GRAPHIC SCALE

1/4" = 1' - 0" 0 1' 5' 10' 15'

SYM	DESCRIPTION	DATE	APPR

SEAL

A/E INFO

APPROVED

FOR COMMANDER NAVFAC

ACTIVITY
Approved by LCDR VINCE DEL GRECO, RO/CO with PWD YORKTOWN, via Email.

SATISFACTORY TO DATE 03/26/2026

DES DMS | DRW DMS | CHK WCT

PM/DM MME/WJW

BRANCH MANAGER CGM

CHIEF ENG/ARCH JWJ

FIRE PROTECTION HPN

DEPARTMENT OF THE NAVY
NAVAL FACILITIES ENGINEERING SYSTEMS COMMAND
MID-LANT DC CORE

NAVAL FACILITIES ENGINEERING SYSTEMS COMMAND - MID-ATLANTIC
NAVAL STATION - NORFOLK, VA

NAVAL WEAPONS STATION
YORKTOWN, VIRGINIA

P171 WEAPON MAGAZINES
SEGREGATION FACILITIES

PLAN - EQUIPMENT CATWALK FRAMING

SCALE: AS NOTED

EPROJECT NO.: 1737010

CONSTR. CONTR. NO. ##

NAVFAC DRAWING NO. 12942052

SHEET 386 OF 499

SF101A

DRAWFORM REVISION: 25 AUGUST 2020

4/7/2026 9:33:54 AM
C:\Users\david.sammons3\Documents\Revit\Local Files\P171-1737010-S-R21-SEG_david.sammons3.rvt
SF101A

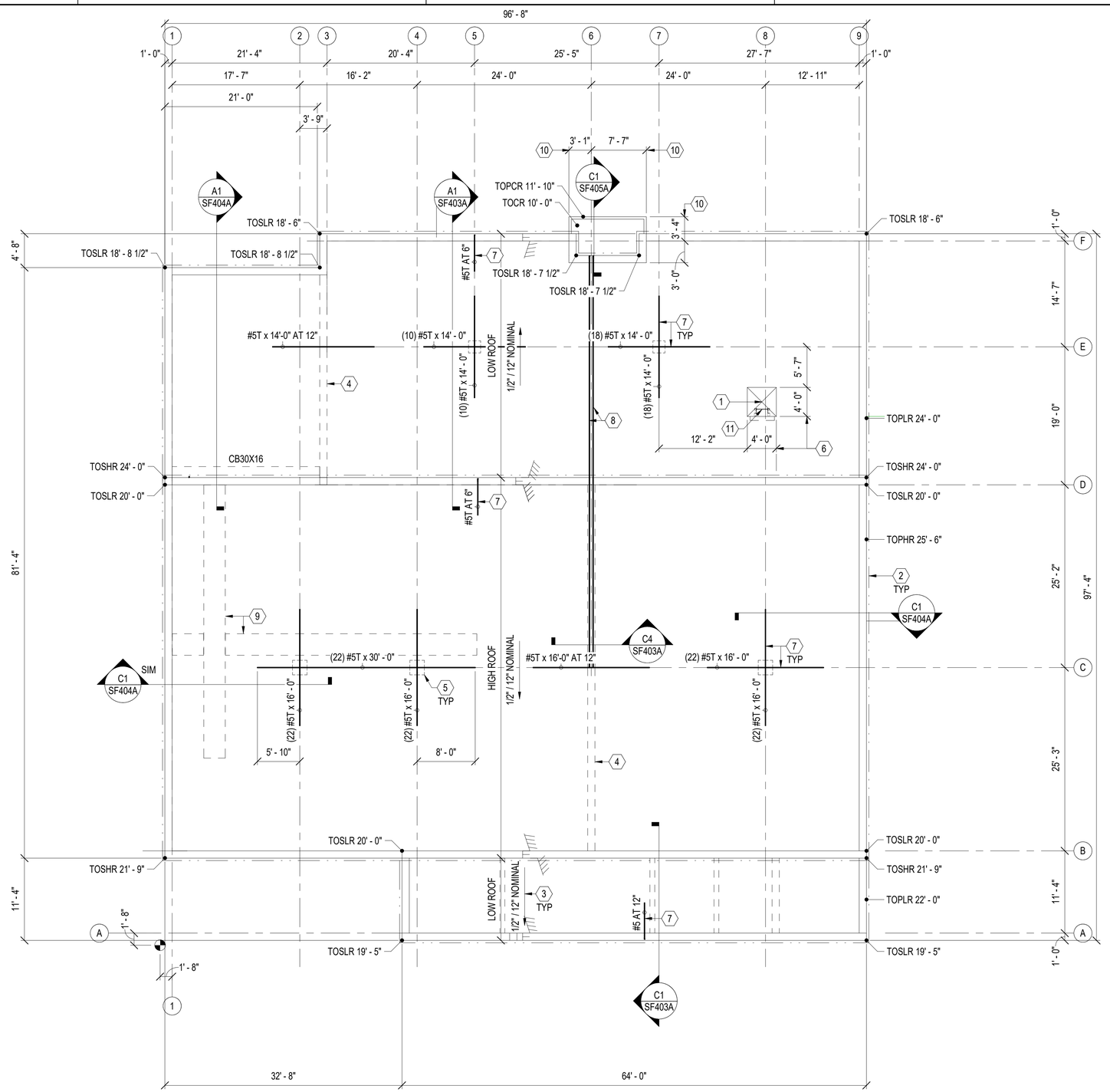

A1 PLAN - ROOF FRAMING

SCALE: 1/8" = 1'-0"

PLAN NORTH — BLDG 1 | PLAN NORTH — BLDG 2

GENERAL SHEET NOTES

A. REFER TO S-001A FOR GENERAL NOTES AND LEGEND, SB101A AND SB102A FOR DIMENSIONS NOT SHOWN ON FRAMING PLAN AND SF501A FOR CONCRETE COLUMN AND WALL DETAILS.

B. COLUMN AND WALL MARKS ARE NOT SHOWN ON ROOF FRAMING PLAN. REFER TO SB102A FOR MARKS.

C. ROOF SLABS ARE 8-INCH THICK CONCRETE SLABS REINFORCED WITH #5 BARS UNIFORMLY SPACED AT 12" ON CENTER MAXIMUM TOP AND BOTTOM EACH DIRECTION. REFER TO SECTION A1/SF403A FOR REINFORCING PLACEMENT DETAILS. PROVIDE ADDITIONAL REINFORCING AT LOCATIONS SHOWN ON PLAN AND AS FOLLOWS:

1. AT COLUMNS, PLACE ADDED TOP BARS BETWEEN UNIFORMLY SPACED REINFORCING SO THEY EXTEND EQUAL DISTANCE EACH SIDE OF COLUMN/WALL CENTERLINE UNLESS NOTED OTHERWISE.
2. AT INTERIOR WALLS, PLACE ADDED TOP REINFORCING BARS MIDWAY BETWEEN UNIFORMLY SPACED SLAB TOP REINFORCING ALONG ENTIRE LENGTH OF WALL.
3. AT SLAB PERIMETER, ADDED TOP REINFORCING BARS ARE L-SHAPE BEND TYPE WITH VERTICAL LEG CAST WITH WALL BELOW SLAB AND SLOPING LEG CAST WITH SLAB AND MATCHING SLAB SLOPE. LEG LENGTHS ARE 0.30 x CLEAR SPAN +1'-0" FOR SLOPING LEG AND 5'-0" VERTICAL EXCEPT PROVIDE 3'-8" LONG VERTICAL LEG WHERE LEG IS SHOWN TERMINATING IN STANDARD 180-DEGREE HOOK. PLACE ADDED REINFORCING AS FOLLOWS:

   a. AT ROOFS EXCEPT ROOF OVER UTILITY SPACES: AT AND MIDWAY BETWEEN UNIFORMLY SPACED SLAB TOP REINFORCING AROUND ENTIRE SLAB PERIMETER.
   b. AT ROOF OVER UTILITY SPACES: AT UNIFORMLY SPACED SLAB TOP REINFORCING AROUND ENTIRE SLAB PERIMETER.

D. PLACE ROOF SLABS MONOLITHICALLY WITHOUT INTERMEDIATE CONSTRUCTION JOINTS WITHIN AREAS BOUNDED BY WALLS.

E. CB30X16 DENOTES 30-INCH WIDE X 16-INCH DEEP CONCRETE BEAM CAST MONOLITHIC WITH ROOF SLAB AND REINFORCED WITH (5) #8 TOP AND BOTTOM AND #4 STIRRUPS AT 6" ON CENTER FULL LENGTH. PROVIDE STANDARD 90-DEGREE HOOKS ON TOP REINFORCING AT BEAM END WITH SLAB NOT CONTINUING BEYOND BEAM END AND EXTEND TOP REINFORCING 5'-0" STRAIGHT INTO SLAB AT BEAM END WITH SLAB CONTINUING BEYOND BEAM END. DO NOT SPLICE TOP AND BOTTOM BARS.

KEYNOTES

1 ROOF ACCESS OPENING. REFER TO DETAIL ON SF405A FOR ADDED REINFORCING AND OTHER DETAILS. REFER TO ARCHITECTURAL DRAWINGS FOR ROOF HATCH DETAILS.

2 OUTLINE OF METAL WALL PANEL - REFER TO ARCHITECTURAL DRAWINGS.

3 ROOF SLOPE IS NOMINAL. ACTUAL SLOPE RESULTS FROM TOP OF ROOF SLAB ELEVATIONS INDICATED.

4 OUTLINE OF CONCRETE WALL BELOW.

5 OUTLINE OF CONCRETE COLUMN BELOW.

6 OPENING DIMENSIONS ARE ON HORIZONTAL PROJECTION OF ROOF AND NOT ALONG ROOF SLOPE.

7 ADDED SLAB TOP REINFORCING OF QUANTITY, SIZE AND LENGTH INDICATED. REFER TO GENERAL SHEET NOTES THIS SHEET FOR REINFORCING PLACEMENT AND OTHER REQUIREMENTS.

8 (2) #5 TOP AND BOTTOM COLLECTOR ELEMENT REINFORCING WITH STANDARD 180-DEGREE HOOKS EACH END IN LOW ROOF SLAB EXTENDING INTO CONCRETE WALL AT HIGH ROOF TO GRID LINE C.

9 OUTLINE OF EQUIPMENT CATWALK BELOW. REFER TO SF101A.

10 EDGE OF CANOPY ROOF SLAB / FACE OF CANOPY ROOF PARAPET.

11 FIXED LADDER. REFER TO DETAIL ON SF402A.

GRAPHIC SCALE

1/8" = 1' - 0" 0 5' 10' 15' 30'

SYM	DESCRIPTION	DATE	APPR

NAVFAC

SEAL

A/E INFO

APPROVED

FOR COMMANDER NAVFAC

ACTIVITY: Approved by LCDR VINCE DEL GRECO, ROICC with PWD YORKTOWN, via Email.

SATISFACTORY TO DATE 03/26/2026

DES DMS | DRW DMS | CHK WCT

PM/DM MME/WJW

BRANCH MANAGER CGM

CHIEF ENG/ARCH JWJ

FIRE PROTECTION HPN

DEPARTMENT OF THE NAVY
NAVAL FACILITIES ENGINEERING SYSTEMS COMMAND
MIDLANT DC CORE

NAVAL FACILITIES ENGINEERING SYSTEMS COMMAND - MID-ATLANTIC
NAVAL STATION - NORFOLK, VA

NAVAL WEAPONS STATION YORKTOWN, VIRGINIA
P171 WEAPON MAGAZINES
SEGREGATION FACILITIES

PLAN - ROOF FRAMING

SCALE: AS NOTED

EPROJECT NO.: 1737010

CONSTR. CONTR. NO. ##

NAVFAC DRAWING NO. 12942053

SHEET 387 OF 499

SF102A

DRAWFORM REVISION: 25 AUGUST 2020

4/7/2026 9:33:56 AM SF102A
C:\Users\david.sammons3\Documents\Revit Local Files\P171-1737010-S-R21-SEG_david.sammons3.rvt

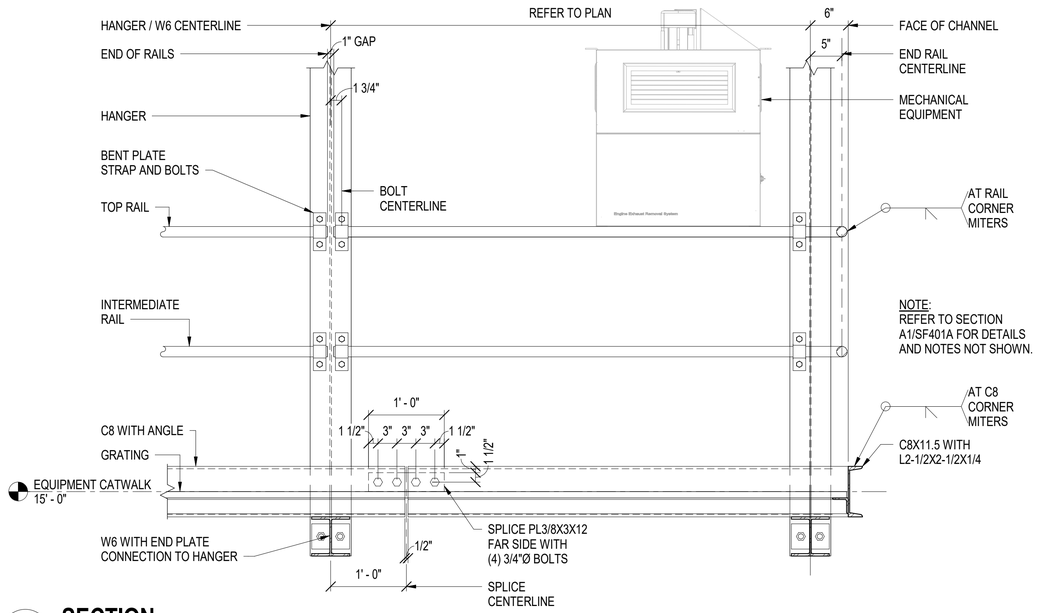

C1 SECTION

SCALE: 1" = 1'-0"

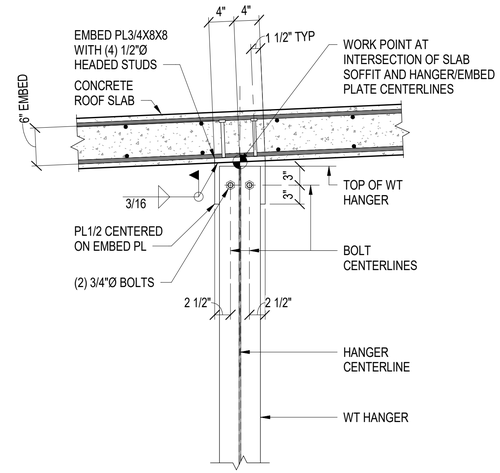

C3 DETAIL - CATWALK HANGAR TO SLAB CONNECTION

SCALE: 1" = 1'-0"

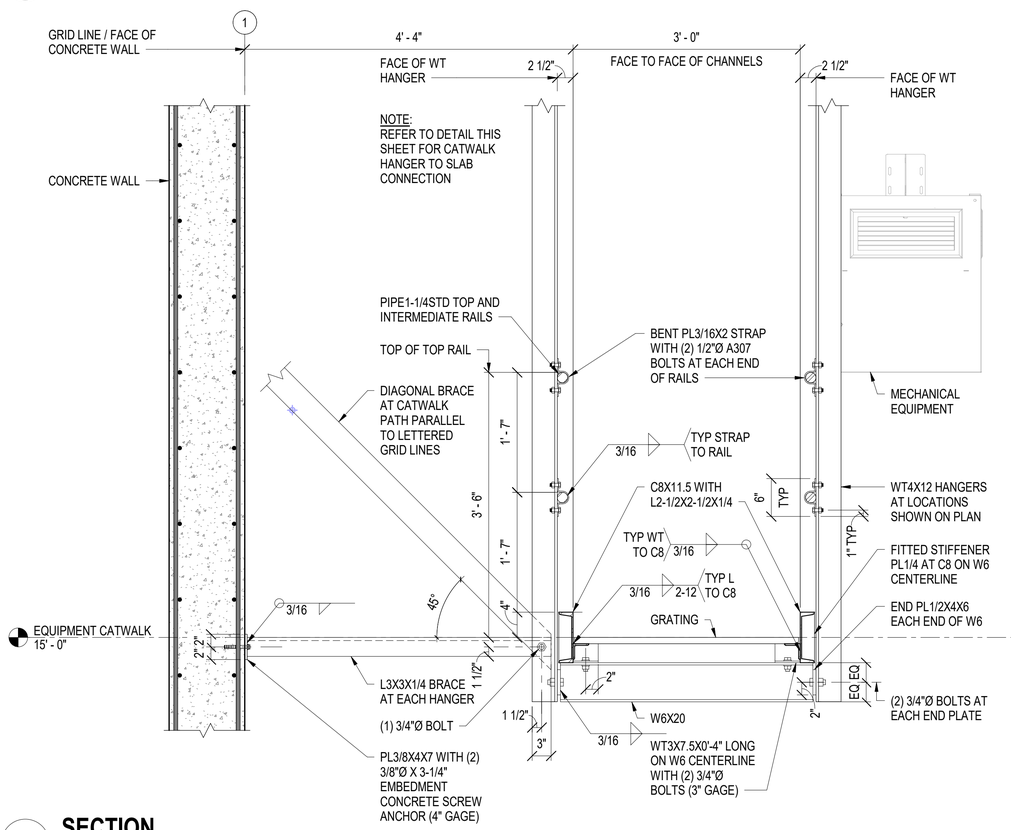

A1 SECTION

SCALE: 1" = 1'-0"

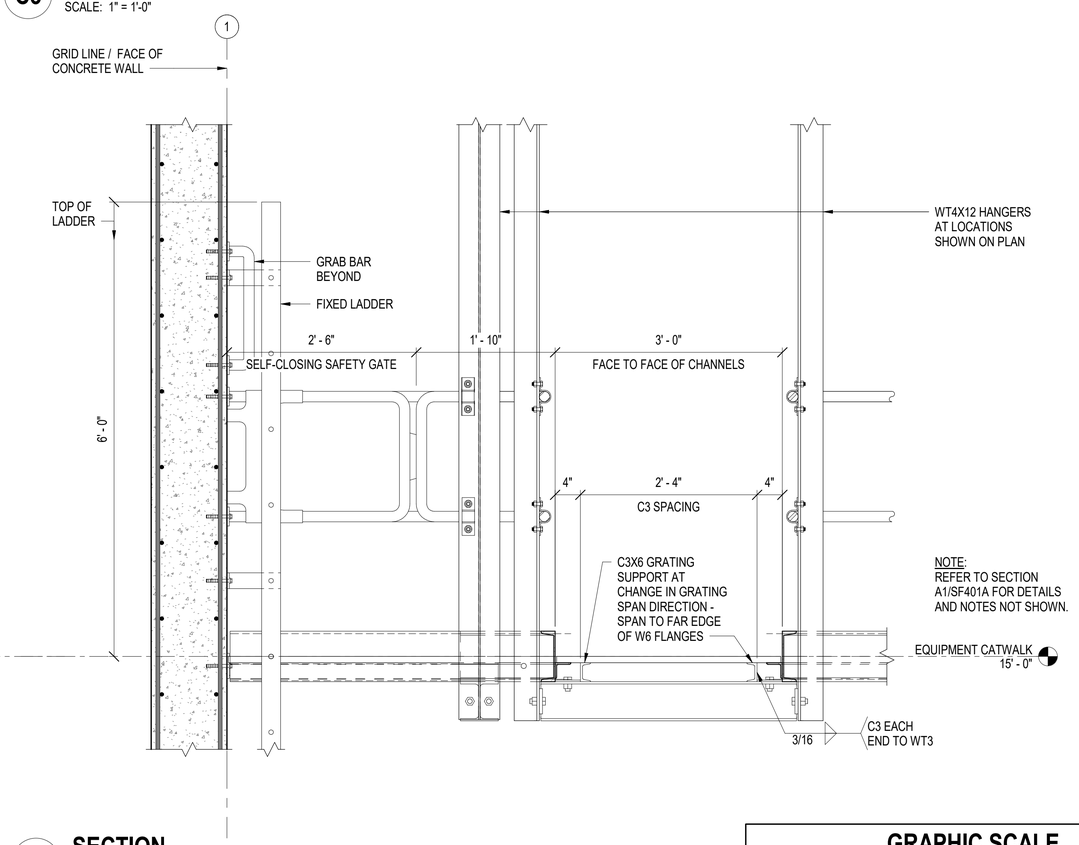

A3 SECTION

SCALE: 1" = 1'-0"

GRAPHIC SCALE

1" = 1' - 0" 0 6" 1' 2' 3'

SYM	DESCRIPTION	DATE	APPR

SEAL

A/E INFO

APPROVED

FOR COMMANDER NAVFAC

ACTIVITY
Approved by LCDR VINCE DEL GRECO, ROICC with PWD YORKTOWN, via Email.

SATISFACTORY TO DATE 03/26/2026

DES DMS	DRW DMS	CHK WCT	
PM/DM	MME/WJW		
BRANCH MANAGER	CGM		
CHIEF ENG/ARCH	JWJ		
FIRE PROTECTION	HPN		

DEPARTMENT OF THE NAVY
NAVAL FACILITIES ENGINEERING SYSTEMS COMMAND
MIDLANT DC CORE

NAVAL FACILITIES ENGINEERING SYSTEMS COMMAND - MID-ATLANTIC
NAVAL STATION - NORFOLK, VA

NAVAL WEAPONS STATION
YORKTOWN, VIRGINIA

P171 WEAPON MAGAZINES
SEGREGATION FACILITIES

SECTIONS - EQUIPMENT CATWALK FRAMING

SCALE: AS NOTED
EPROJECT NO.: 1737010
CONSTR. CONTR. NO. ##
NAVFAC DRAWING NO. 12942054
SHEET 388 OF 499

SF401A

DRAWFORM REVISION: 25 AUGUST 2020

4/7/2026 9:33:58 AM
C:\Users\david.sammons3\Documents\Revit Local Files\P171-1737010-S-R21-SEG_david.sammons3.rvt
SF401A

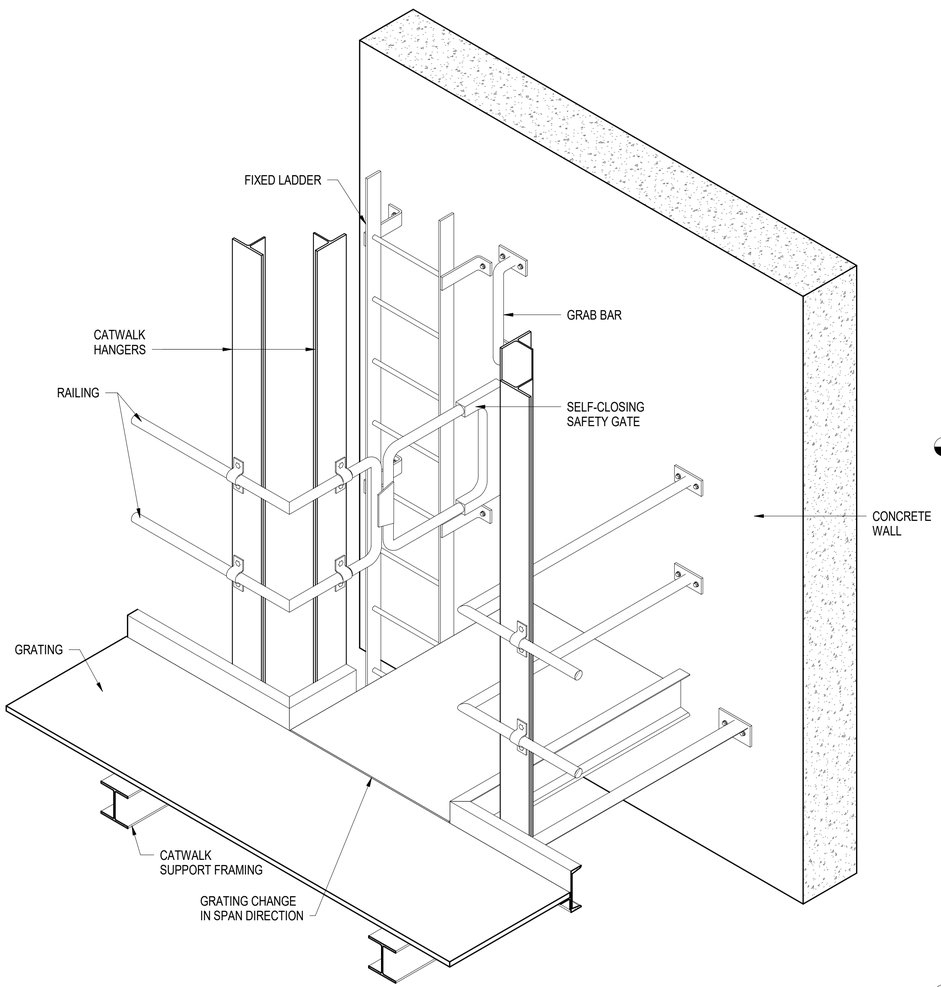

A1 DETAIL - 3D REPRESENTATION AT LADDER ACCESS TO EQUIPMENT CATWALK

SCALE: NOT TO SCALE

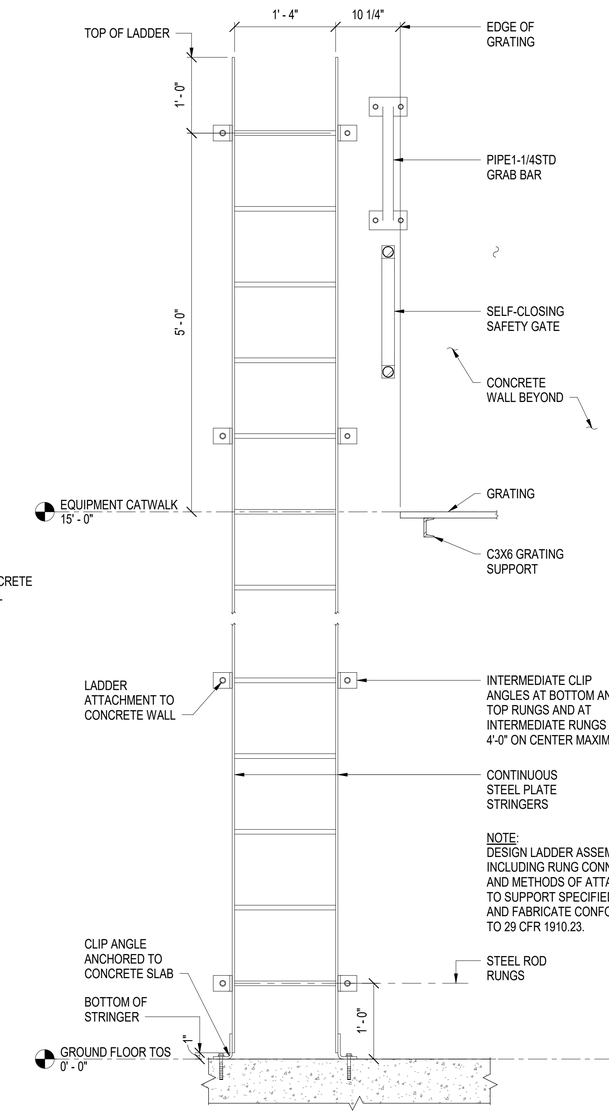

A3 DETAIL - FIXED LADDER AT CATWALK ACCESS

SCALE: 1" = 1'-0"

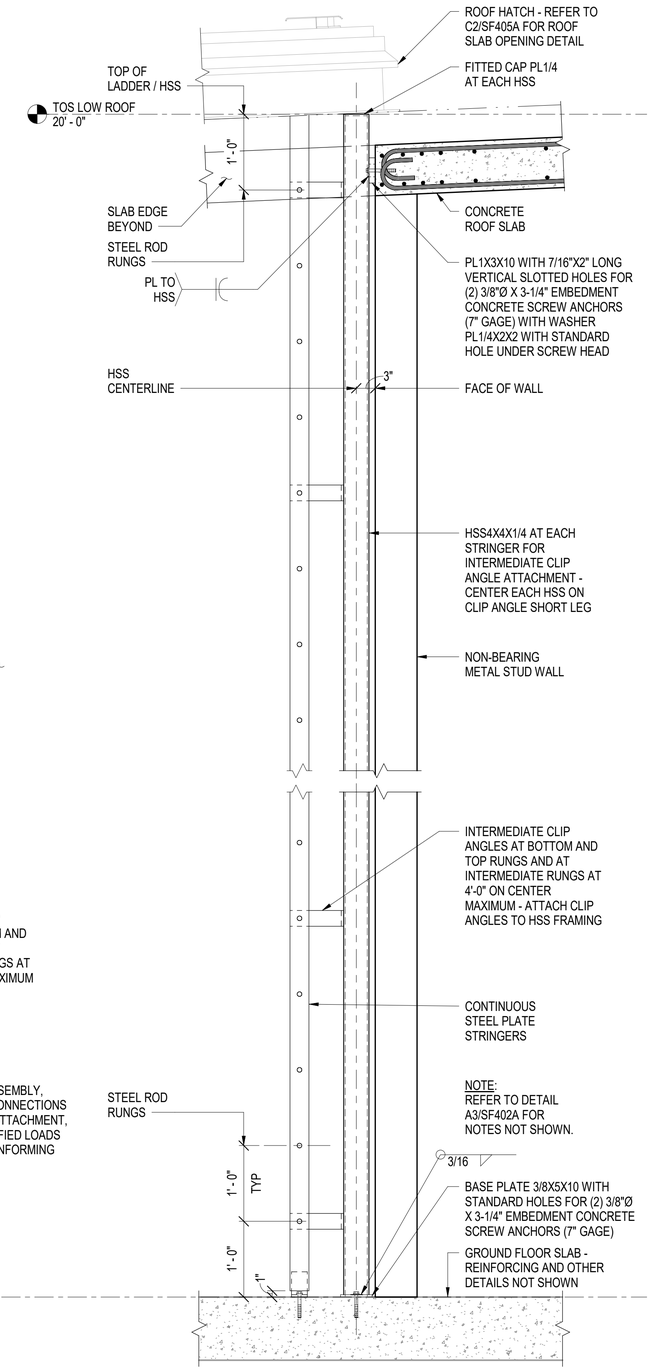

A4 DETAIL - FIXED LADDER AT ROOF ACCESS HATCH

SCALE: 1" = 1'-0"

GRAPHIC SCALE

1" = 1' - 0" 0 6" 1' 2' 3'

SYM	DESCRIPTION	DATE	APPR

NAVFAC

SEAL

A/E INFO

APPROVED

FOR COMMANDER NAVFAC

ACTIVITY
Approved by LCDR VINCE DEL GRECO, ROICC with PWD YORKTOWN, via Email.

SATISFACTORY TO DATE 03/26/2026

DES DMS	DRW DMS	CHK WCT	
PM/DM	MME/WJW		
BRANCH MANAGER	CGM		
CHIEF ENG/ARCH	JWJ		
FIRE PROTECTION	HPN		

DEPARTMENT OF THE NAVY
NAVAL FACILITIES ENGINEERING SYSTEMS COMMAND
MIDLANT DC CORE
NAVAL FACILITIES ENGINEERING SYSTEMS COMMAND - MID-ATLANTIC
NAVAL STATION - NORFOLK, VA
NAVAL WEAPONS STATION
YORKTOWN, VIRGINIA
P171 WEAPON MAGAZINES
SEGREGATION FACILITIES
DETAILS - EQUIPMENT CATWALK FRAMING

SCALE: AS NOTED
EPROJECT NO.: 1737010
CONSTR. CONTR. NO. ##
NAVFAC DRAWING NO. 12942055
SHEET 389 OF 499
SF402A
DRAWFORM REVISION: 25 AUGUST 2020

SF402A
4/7/2026 9:33:59 AM
C:\Users\david.sammons3\Documents\Revit Local Files\P171-1737010-S-R21-SEG_david.sammons3.rvt

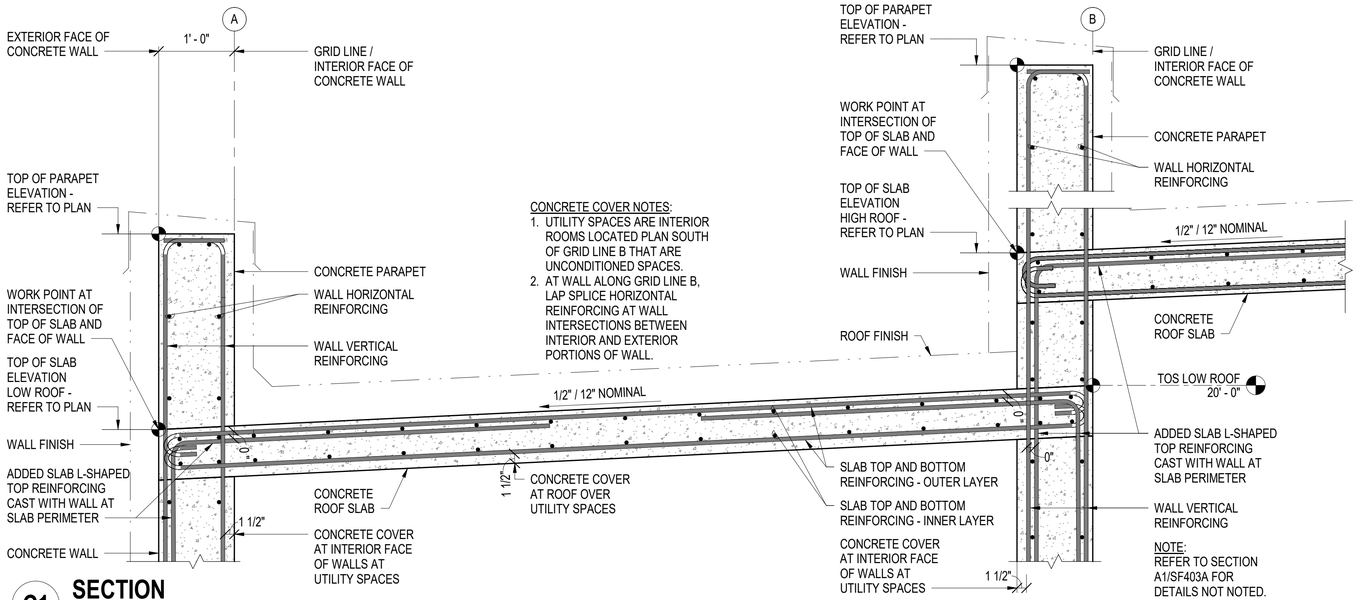

CONCRETE COVER NOTES:
1. UTILITY SPACES ARE INTERIOR ROOMS LOCATED PLAN SOUTH OF GRID LINE B THAT ARE UNCONDITIONED SPACES.
2. AT WALL ALONG GRID LINE B, LAP SPLICE HORIZONTAL REINFORCING AT WALL INTERSECTIONS BETWEEN INTERIOR AND EXTERIOR PORTIONS OF WALL.

C1 SECTION
SCALE: 1" = 1'-0"

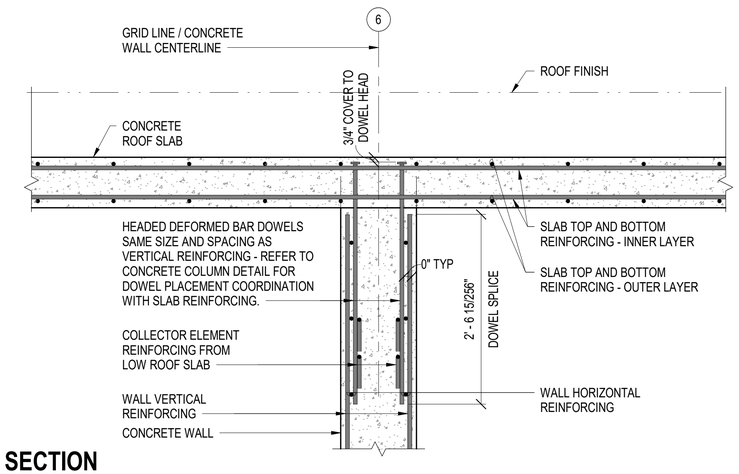

C4 SECTION
SCALE: 1" = 1'-0"

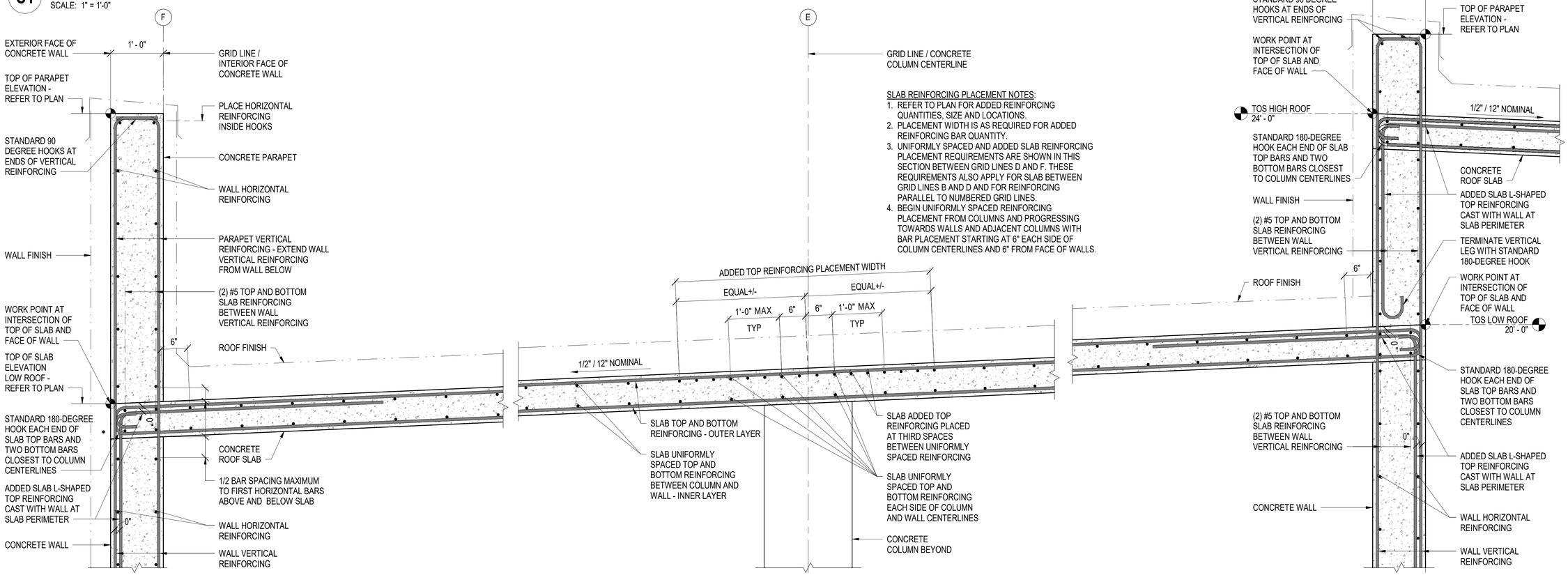

SLAB REINFORCING PLACEMENT NOTES:
1. REFER TO PLAN FOR ADDED REINFORCING QUANTITIES, SIZE AND LOCATIONS.
2. PLACEMENT WIDTH IS AS REQUIRED FOR ADDED REINFORCING BAR QUANTITY.
3. UNIFORMLY SPACED AND ADDED SLAB REINFORCING PLACEMENT REQUIREMENTS ARE SHOWN IN THIS SECTION BETWEEN GRID LINES D AND F. THESE REQUIREMENTS ALSO APPLY FOR SLAB BETWEEN GRID LINES B AND D AND FOR REINFORCING PARALLEL TO NUMBERED GRID LINES.
4. BEGIN UNIFORMLY SPACED REINFORCING PLACEMENT FROM COLUMNS AND PROGRESSING TOWARDS WALLS AND ADJACENT COLUMNS WITH BAR PLACEMENT STARTING AT 6" EACH SIDE OF COLUMN CENTERLINES AND 6" FROM FACE OF WALLS.

A1 SECTION
SCALE: 1" = 1'-0"

GRAPHIC SCALE
1" = 1' - 0"
0 6" 1' 2' 3'

SYM	DESCRIPTION	DATE	APPR

SEAL

A/E INFO
APPROVED
FOR COMMANDER NAVFAC:
ACTIVITY
Approved by LCDR VINCE DEL GRECO, ROICC with PWD YORKTOWN, via Email.
SATISFACTORY TO DATE 03/26/2026
DES DMS | DRW DMS | CHK WCT
PM/DM MME/WJW
BRANCH MANAGER CGM
CHIEF ENG/ARCH JWJ
FIRE PROTECTION HPN

DEPARTMENT OF THE NAVY
NAVAL FACILITIES ENGINEERING COMMAND
MID-ATLANTIC DC CORE
NAVAL FACILITIES ENGINEERING SYSTEMS COMMAND - MID-ATLANTIC
NAVAL STATION - NORFOLK, VA
NAVAL WEAPONS STATION
YORKTOWN, VIRGINIA
P171 WEAPON MAGAZINES
SEGREGATION FACILITIES
SECTIONS - ROOF FRAMING

SCALE: AS NOTED
EPROJECT NO.: 1737010
CONSTR. CONTR. NO. ##
NAVFAC DRAWING NO. 12942056
SHEET 390 OF 499
SF403A
DRAWFORM REVISION: 25 AUGUST 2020

4/7/2026 9:34:04 AM SF403A
C:\Users\david.sammons3\Documents\Revit Local Files\P171-1737010-S-R21-SEG_david.sammons3.rvt

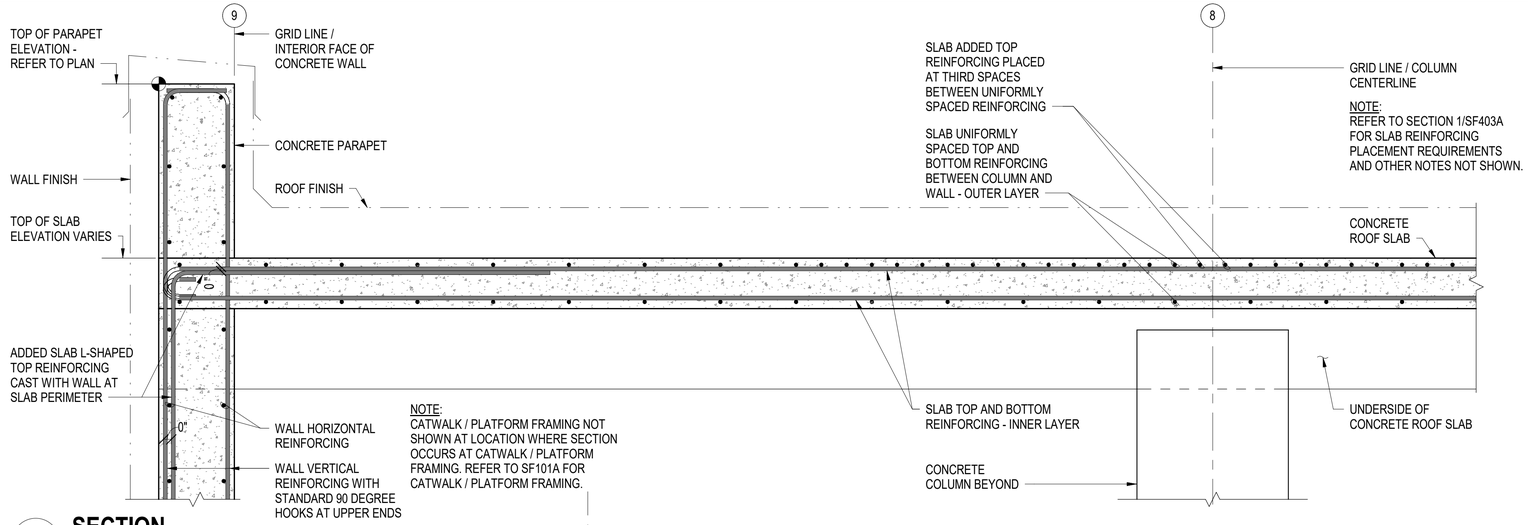

C1 SECTION

SCALE: 1" = 1'-0"

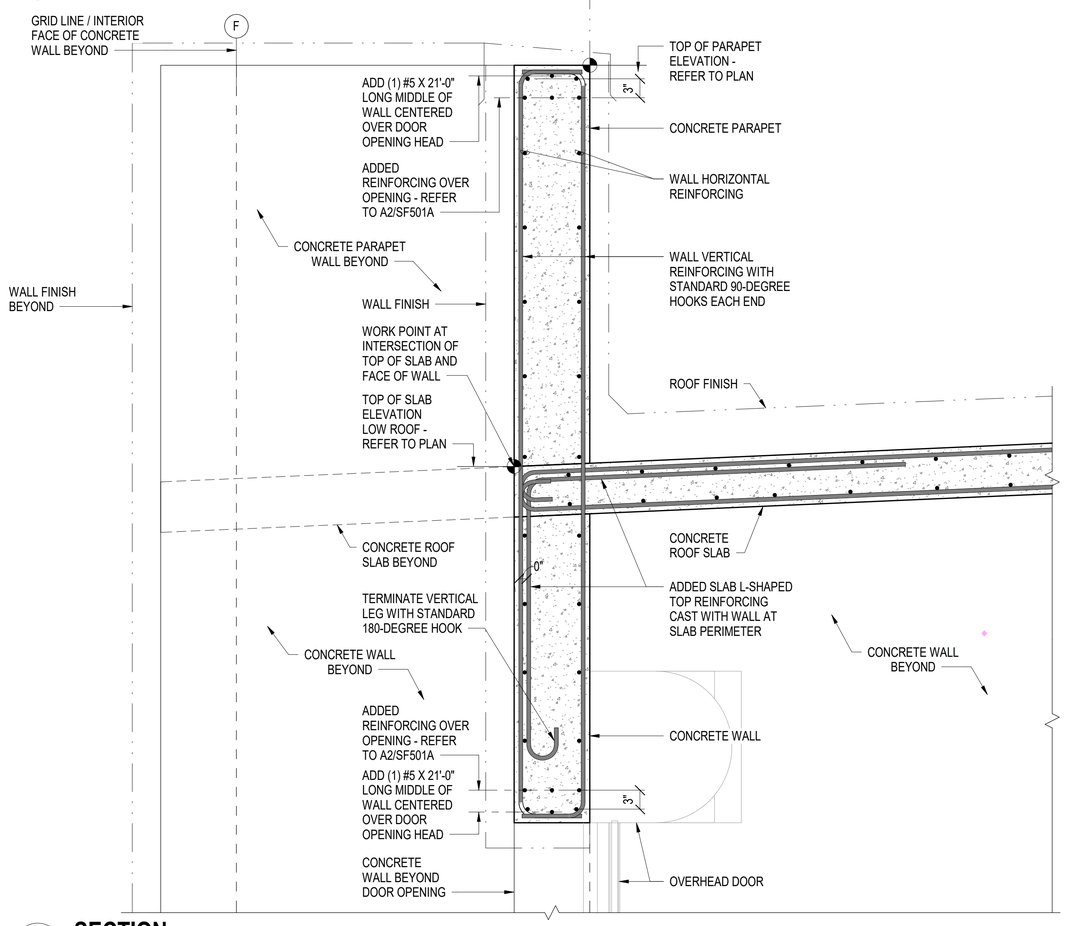

A1 SECTION

SCALE: 1" = 1'-0"

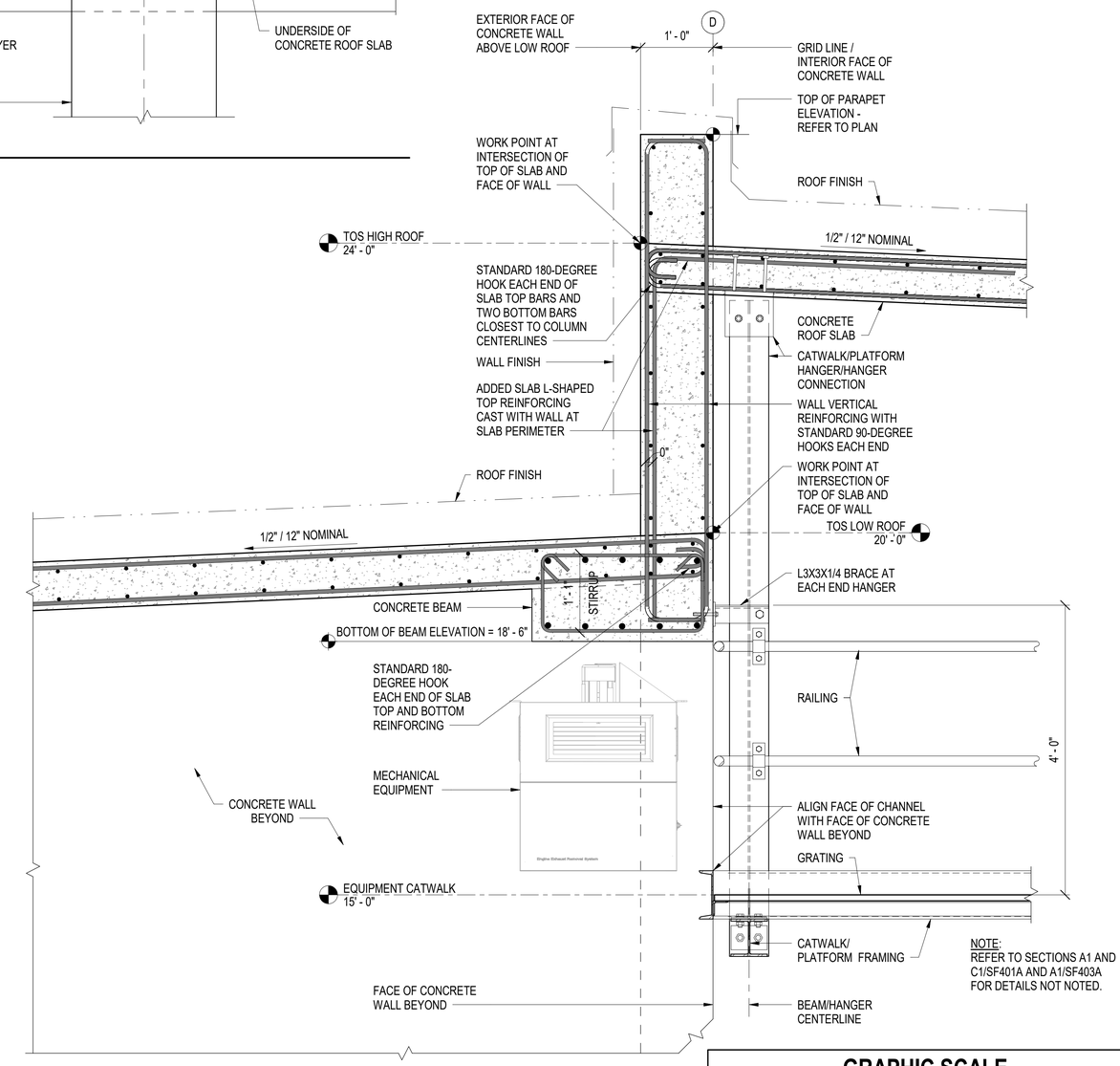

GRAPHIC SCALE

1" = 1' - 0" 0 6" 1' 2' 3'

SYM	DESCRIPTION	DATE	APPR

NAVFAC

SEAL

A/E INFO

APPROVED

FOR COMMANDER NAVFAC

ACTIVITY: Approved by LCDR VINCE DEL GRECO, ROICC with PWD YORKTOWN, via Email.

SATISFACTORY TO DATE: 03/26/2026

DES DMS | DRW DMS | CHK WCT

PM/DM: MME/WJW

BRANCH MANAGER: CGM

CHIEF ENG/ARCH: JWJ

FIRE PROTECTION: HPN

DEPARTMENT OF THE NAVY
NAVAL FACILITIES ENGINEERING SYSTEMS COMMAND
MIDLANT DC CORE

NAVAL FACILITIES ENGINEERING SYSTEMS COMMAND - MID-ATLANTIC
NAVAL STATION - NORFOLK, VA

NAVAL WEAPONS STATION
YORKTOWN, VIRGINIA

P171 WEAPON MAGAZINES
SEGREGATION FACILITIES

SECTIONS - ROOF FRAMING

SCALE: AS NOTED

EPROJECT NO.: 1737010

CONSTR. CONTR. NO.: ##

NAVFAC DRAWING NO.: 12942057

SHEET 391 OF 499

SF404A

DRAWFORM REVISION: 25 AUGUST 2020

4/7/2026 9:34:06 AM
C:\Users\david.sammons3\Documents\Revit\Local Files\P171-1737010-S-R21-SEG_david.sammons3.rvt
SF404A

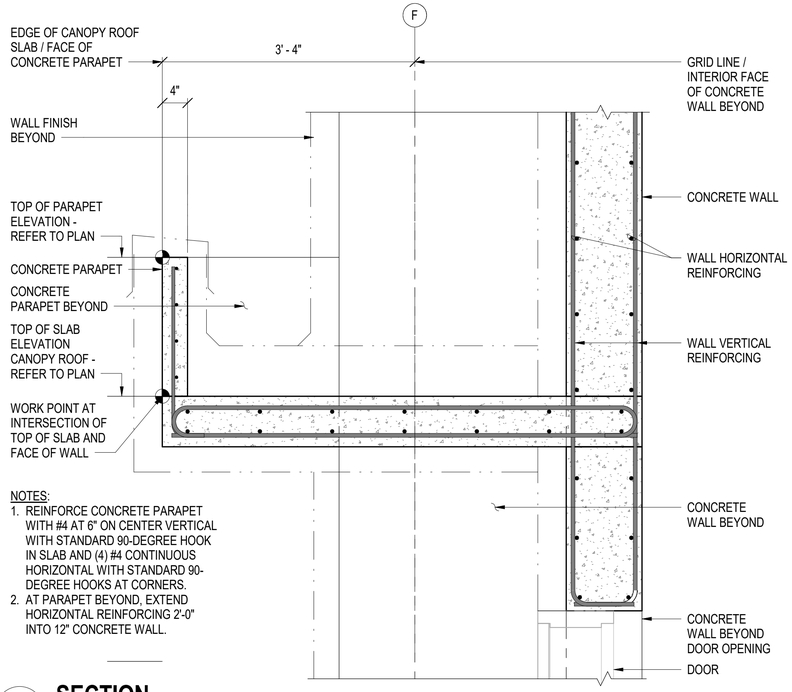

NOTES:
1. REINFORCE CONCRETE PARAPET WITH #4 AT 6" ON CENTER VERTICAL WITH STANDARD 90-DEGREE HOOK IN SLAB AND (4) #4 CONTINUOUS HORIZONTAL WITH STANDARD 90-DEGREE HOOKS AT CORNERS.
2. AT PARAPET BEYOND, EXTEND HORIZONTAL REINFORCING 2'-0" INTO 12" CONCRETE WALL.

C1 SECTION

SCALE: 1" = 1'-0"

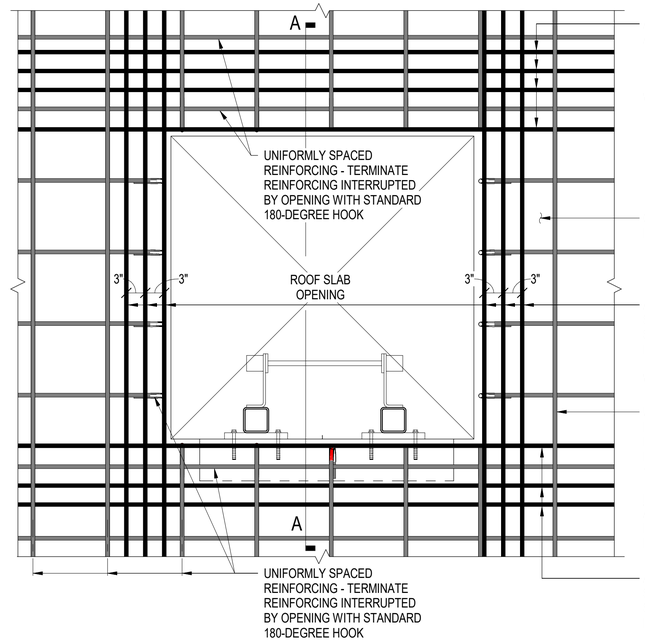

ADD (4) #5 X 30'-0" LONG SPACED AS SHOWN TOP AND BOTTOM EACH SIDE OF OPENING - START END OF BAR PLACEMENT AT EXTERIOR FACE OF CONCRETE WALL ALONG GRID LINE 9

CONCRETE ROOF SLAB

ADD (3) #5 X 20'-0" LONG SPACED AS SHOWN TOP AND BOTTOM EACH SIDE OF OPENING - START END OF BAR PLACEMENT AT 3/4" CLEAR OF EXTERIOR FACE OF CONCRETE WALL ALONG GRID LINE D

UNIFORMLY SPACED REINFORCING - TERMINATE REINFORCING INTERRUPTED BY OPENING WITH STANDARD 180-DEGREE HOOK

NOTE:
ADDED REINFORCING SHOWN BLACK AND UNIFORMLY SPACED REINFORCING SHOWN GRAY.

ADD (3) #5 X 30'-0" LONG SPACED AS SHOWN TOP AND BOTTOM EACH SIDE OF OPENING - START END OF BAR PLACEMENT AT 3/4" CLEAR OF EXTERIOR FACE OF CONCRETE WALL ALONG GRID LINE 9

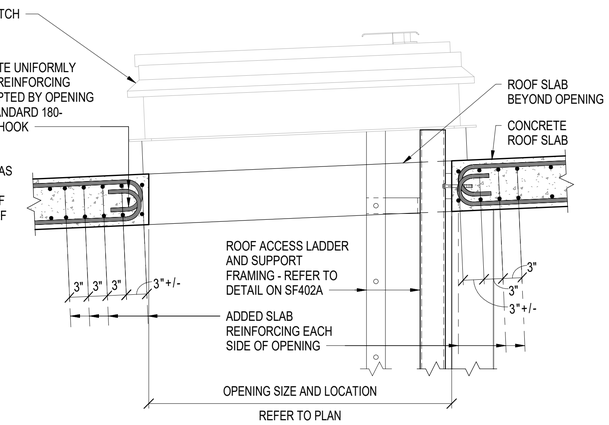

SECTION A-A

C2 DETAIL AND SECTION - ROOF HATCH SLAB OPENING

SCALE: 1" = 1'-0"

GRAPHIC SCALE

1" = 1' - 0" 0 6" 1' 2' 3'

SYM	DESCRIPTION	DATE	APPR

SEAL

A/E INFO

APPROVED

FOR COMMANDER NAVFAC

ACTIVITY
Approved by LCDR VINCE DEL GRECO, ROICC with PWD YORKTOWN, via Email.

SATISFACTORY TO DATE 03/26/2026

DES DMS | DRW DMS | CHK WCT

PM/DM MME/WJW

BRANCH MANAGER CGM

CHIEF ENG/ARCH JWJ

FIRE PROTECTION HPN

DEPARTMENT OF THE NAVY
NAVAL FACILITIES ENGINEERING SYSTEMS COMMAND
MIDLANT DC CORE

NAVAL FACILITIES ENGINEERING SYSTEMS COMMAND - MID-ATLANTIC
NAVAL STATION - NORFOLK, VA

NAVAL WEAPONS STATION
YORKTOWN, VIRGINIA

P171 WEAPON MAGAZINES
SEGREGATION FACILITIES

SECTIONS - ROOF FRAMING

SCALE: AS NOTED

EPROJECT NO.: 1737010

CONSTR. CONTR. NO. ##

NAVFAC DRAWING NO. 12942058

SHEET 392 OF 499

SF405A

DRAWFORM REVISION: 25 AUGUST 2020

4/7/2026 9:34:07 AM SF405A
C:\Users\david.sammons3\Documents\Revit\Local Files\P171-1737010-S-R21-SEG_david.sammons3.rvt

CONCRETE WALL SCHEDULE		
MARK	THICKNESS	UNIFORMLY SPACED REINFORCING (EACH FACE)
CW8	8"	#4 AT 12" ON CENTER MAXIMUM EACH DIRECTION
CW12	12"	#5 AT 12" ON CENTER MAXIMUM EACH DIRECTION
CW12A	12"	#5 AT 6" ON CENTER MAXIMUM VERTICAL #5 AT 12" ON CENTER MAXIMUM HORIZONTAL

NOTES:

1. BEGIN UNIFORMLY SPACED VERTICAL REINFORCING AT WALL ENDS, CORNERS, INTERSECTIONS AND DOOR OPENING JAMB EDGES AND SPACE UNIFORMLY BETWEEN NOT TO EXCEED MAXIMUM SPACING.
2. BEGIN UNIFORMLY SPACED HORIZONTAL REINFORCING AT 6" FROM WALL BASE, TOP OF OVERHEAD DOOR OPENINGS AND TOP OF WALL AND SPACE UNIFORMLY BETWEEN NOT TO EXCEED MAXIMUM SPACING.
3. PROVIDE ADDITIONAL REINFORCING AT OPENINGS AND OTHER LOCATIONS AS SHOWN IN SECTIONS AND DETAILS.
4. COORDINATE REINFORCING STEEL PLACEMENT WITH POST INSTALLED ANCHORS FOR MISCELLANEOUS METAL FABRICATIONS, LADDER, PRECAST CONCRETE WATER TABLE SUPPORT AND OTHER ELEMENTS WITH POST INSTALLED ANCHORS.

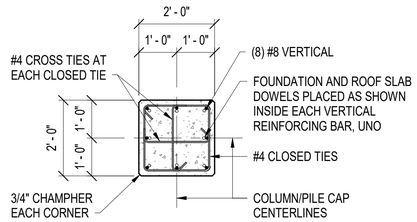

PLAN SHOWN AT CC24X24
PLAN SIMILAR AT CC20X20

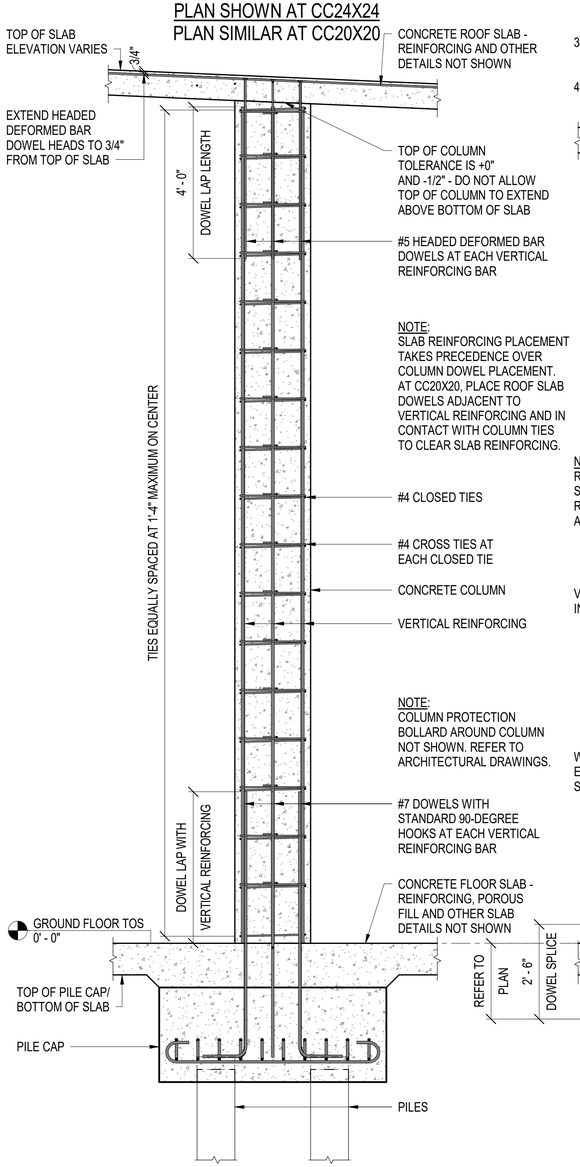

SECTION SHOWN AT CC24X24
SECTION SIMILAR AT CC20X20

A1 DETAILS - CONCRETE COLUMNS

SCALE: 1/2" = 1'-0"

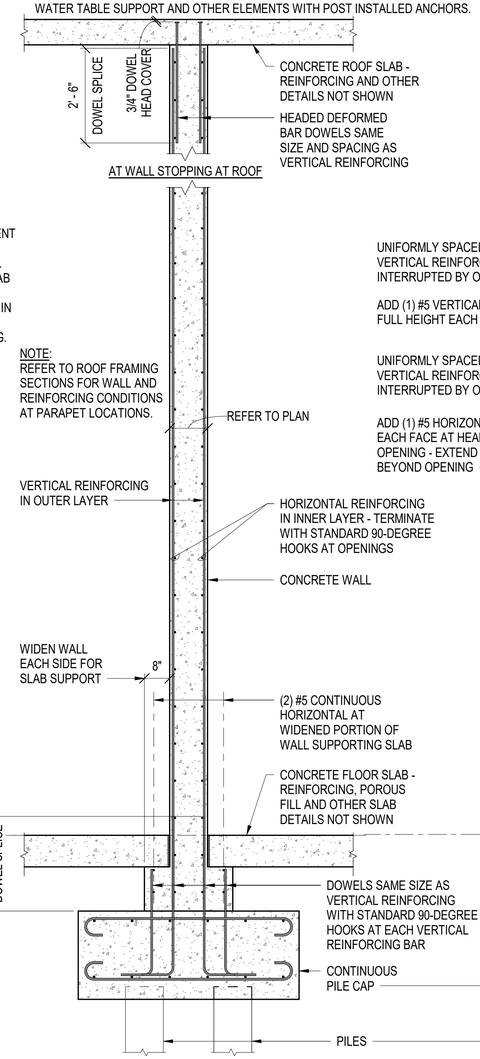

SECTION

NOTE:
WALL SECTION SHOWN AT INTERIOR WALL. CONDITION AT EXTERIOR WALL IS SIMILAR.

A2 DETAILS - CONCRETE WALLS

SCALE: 1/2" = 1'-0"

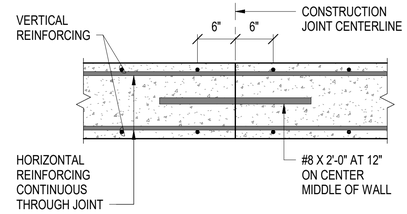

D3 DETAIL - WALL CONSTRUCTION JOINT

SCALE: 1" = 1'-0"

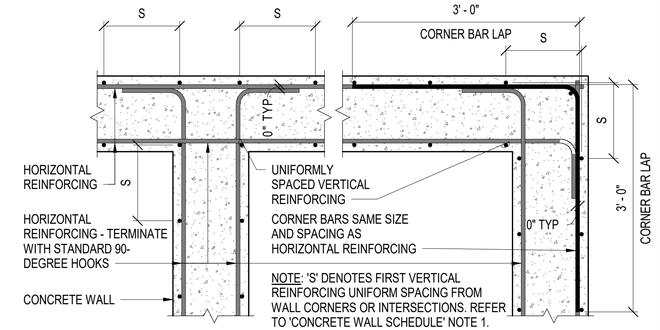

D4 DETAIL - WALL INTERSECTION / CORNER PLAN

SCALE: 1" = 1'-0"

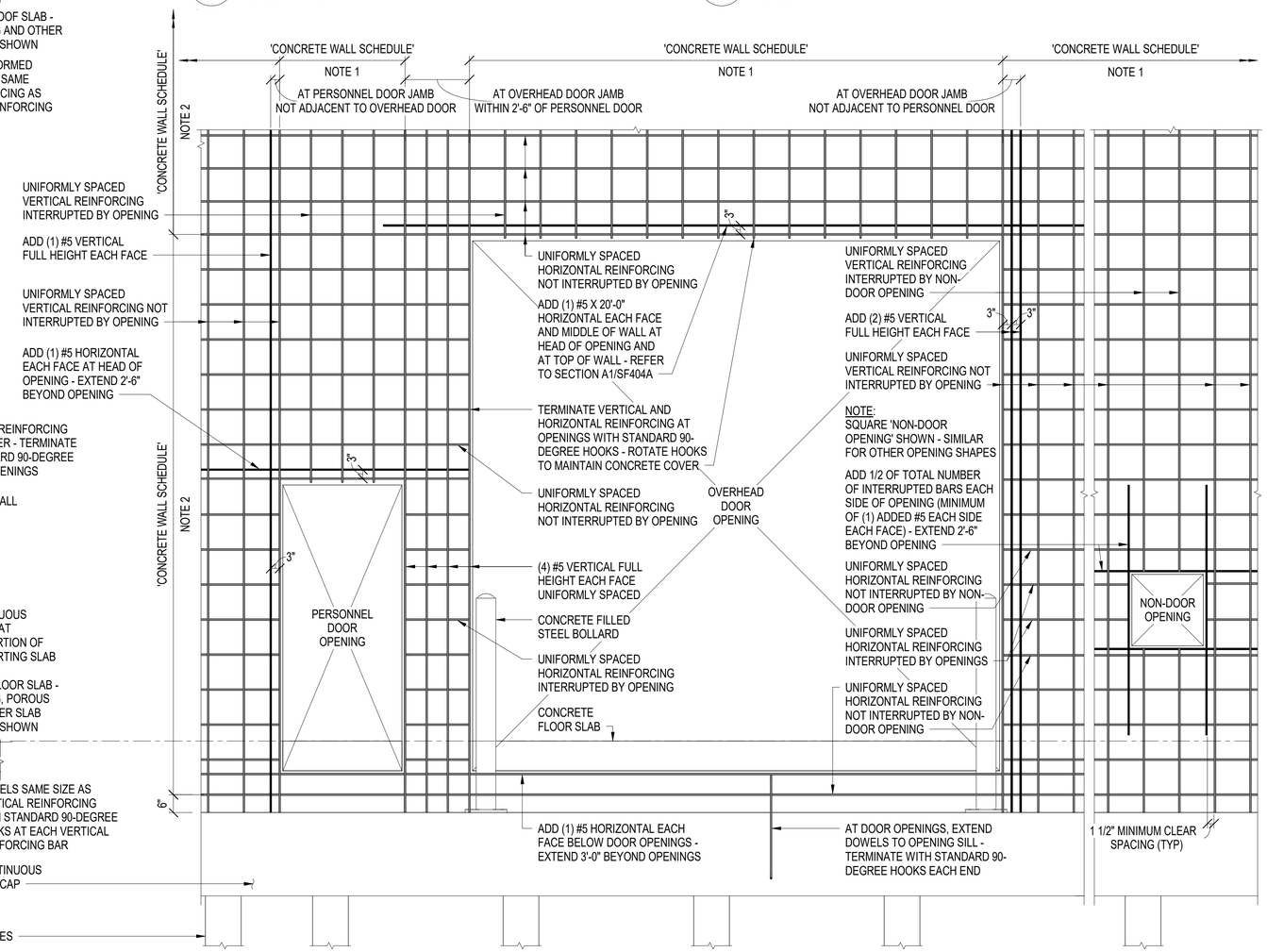

NOTE:
REFER TO FOUNDATION, FLOOR SLAB AND ROOF FRAMING SECTIONS FOR ADDITIONAL INFORMATION AND DETAILS FOR WALL REINFORCING PLACEMENT REQUIREMENTS.

NOTE:
CONTINUOUS PILE CAP REINFORCING AND WALL DOWELS FROM CONTINUOUS PILE CAP ARE NOT SHOWN, PROVIDE DOWELS AT EACH VERTICAL REINFORCING BAR.

NOTE:
ADDED REINFORCING SHOWN BLACK AND UNIFORMLY SPACED REINFORCING SHOWN GRAY IN ELEVATION VIEW. MAINTAIN MINIMUM CLEAR SPACING SHOWN BETWEEN ADDED AND UNIFORMLY SPACED REINFORCING.

ELEVATION AT WALL OPENINGS

GRAPHIC SCALES

1" = 1' - 0" 0 6" 1' 2' 3'

1/2" = 1' - 0" 0 6" 1' 2' 3' 4' 5'

SYM	DESCRIPTION	DATE	APPR

NAVFAC

SEAL

A/E INFO

APPROVED

FOR COMMANDER NAVFAC

ACTIVITY
Approved by LCDR VINCE DEL GRECO, ROICC with PWD YORKTOWN, via Email.

SATISFACTORY TO DATE 03/26/2026

DES DMS DRW DMS CHK WCT

PM/DM MME/W.JW

BRANCH MANAGER CGM

CHIEF ENG/ARCH JWJ

FIRE PROTECTION HPN

DEPARTMENT OF THE NAVY
NAVAL FACILITIES ENGINEERING SYSTEMS COMMAND
MIDLANT DC CORE

NAVAL FACILITIES ENGINEERING SYSTEMS COMMAND - MID-ATLANTIC
NAVAL STATION - NORFOLK, VA

NAVAL WEAPONS STATION
YORKTOWN, VIRGINIA

P171 WEAPON MAGAZINES
SEGREGATION FACILITIES

DETAILS - CONCRETE COLUMNS AND WALLS

SCALE: AS NOTED

EPROJECT NO.: 1737010

CONSTR. CONTR. NO. ##

NAVFAC DRAWING NO. 12942059

SHEET 393 OF 499

SF501A

DRAWFORM REVISION: 25 AUGUST 2020

SF501A

4/7/2026 9:34:08 AM
C:\Users\david.sammons\Documents\Revit Local Files\P171-1737010-S-R21-SEG_david.sammons3.rvt

ARCHITECTURAL SYMBOLS

1 / A-501 — DETAIL NUMBER; SHEET WHERE DRAWN	**DETAIL TAG**
ROOM / 101 — ROOM NAME; ROOM NUMBER	**ROOM TAG**
A1 / A-901 — PHOTOGRAPH NUMBER; SHEET WHERE SHOWN	**PHOTOGRAPH TAG**
A1 / A-301 — BUILDING; A1 / A-301 — SECTION NUMBER; SHEET WHERE DRAWN	**BUILDING SECTION TAG**
A1 / A-401 — INTERIOR ELEVATION NUMBER; SHEET WHERE DRAWN	**INTERIOR ELEVATION TAG**
A1 / A-301 — SECTION NUMBER; SHEET WHERE DRAWN	**WALL / PARTIAL BUILDING SECTION TAG**
1 — KEYNOTE NUMBER	**KEYNOTE TAG**
234 — SPECIALITY ITEM NUMBER	**SPECIALITY ITEM TAG**
A1 / A-301 — DIRECTION OF VIEW; ELEVATION NUMBER; SHEET WHERE DRAWN	**EXTERIOR ELEVATION TAG**
B — WINDOW TYPE LETTER	**WINDOW TYPE TAG**
33 — PARTITION IN PLAN; PARTITION TYPE DESIGNATION (REFER TO PARTITION SCHEDULE)	**PARTITION TYPE TAG**
101 — DOOR NUMBER (REFER TO DOOR SCHEDULE)	**DOOR TAG**

MATERIALS LEGEND

SECTION	ELEVATION
WOOD - ROUGH	EIFS - PAINTED
WOOD BLOCKING	CMU - PAINTED
PLYWOOD	CMU - PAINTED - ACCENT
CONCRETE MASONRY UNIT	GLAZED BLOCK
BRICK	GLAZING
CAST-IN-PLACE CONCRETE	SPANDREL GLAZING / STEEL PANEL
STEEL	CONCRETE FOUNDATION
ALUMINUM	
GYPSUM BOARD	
BATT/LOOSE FILL INSULATION	
RIGID INSULATION	
SAND / MORTAR / PLASTER	
EARTH / COMPACT FILL	
POROUS FILL / GRAVEL	
ACOUSTICAL TILE CEILING	
CERAMIC TILE	
FINISHED WOOD	

GENERAL SHEET NOTES

A. ALL ITEMS INDICATED TO BE REMOVED MUST BE DISPOSED OF OFF SITE UNLESS OTHERWISE NOTED.

B. ALL MATERIALS MUST BE NEW AND PROVIDED BY THE CONTRACTOR UNLESS SPECIFICALLY NOTED AS EXISTING OR AS PROVIDED BY THE GOVERNMENT.

C. ALL WOOD BLOCKING AND MISCELLANEOUS STEEL SHOWN IN DETAILS AND SECTIONS MUST BE CONTINUOUS UNLESS SPECIFICALLY NOTED OTHERWISE.

D. VERIFY ALL FIELD CONDITIONS AND DIMENSIONS PRIOR TO PROCEEDING WITH THE WORK. DIMENSIONS FOR EXISTING WORK ARE INDICATED AS "±". ALL DISCREPANCIES MUST BE BROUGHT TO THE IMMEDIATE ATTENTION OF THE CONTRACTING OFFICER IN WRITING.

E. DEMOLITION OF PLUMBING, MECHANICAL AND ELECTRICAL ITEMS INDICATED ON THE ARCHITECTURAL DRAWINGS IS NOT INTENDED TO INCLUDE ALL NECESSARY DEMOLITION WORK FOR THESE ITEMS. REFER TO PLUMBING, MECHANICAL AND ELECTRICAL DEMOLITION DRAWINGS FOR ADDITIONAL INFORMATION.

F. DIMENSIONS INDICATED FOR NEW WORK ARE TO FACE OF STUD, FACE OF MASONRY OR FACE OF EXISTING SURFACES UNLESS OTHERWISE NOTED.

G. STUDY AND COMPARE THE CONTRACT DOCUMENTS WITH EACH OTHER, AND AT ONCE, REPORT TO THE CONTRACTING OFFICER ANY ERRORS AND INCONSISTENCIES OR OMISSIONS DISCOVERED. ANY CONSTRUCTION ACTIVITY PERFORMED KNOWING IT INVOLVES A RECOGNIZED ERROR, INCONSISTENCY OR OMISSION IN THE CONTRACT DOCUMENTS WITHOUT SUCH NOTICE TO THE CONTRACTING OFFICER, THE CONTRACTOR WILL ASSUME RESPONSIBILITY FOR SUCH PERFORMANCE AND WILL BEAR THE AMOUNT OF THE COST OF THE CONSTRUCTION.

H. LOCATE ALL INTERIOR DOOR FRAMES A DISTANCE OF 4" (FOUR INCHES) FROM THE OUTSIDE EDGE OF DOOR FRAME TO THE CLOSEST ADJACENT PERPENDICULAR PARTITION, UNLESS OTHERWISE NOTED.

J. DESIGN RESPONSIBILITY FOR THE FOLLOWING ARCHITECTURAL SYSTEMS AND COMPONENT PARTS IS DELEGATED TO A QUALIFIED DELEGATED REGISTERED PROFESSIONAL ENGINEER SELECTED BY THE CONTRACTOR. THE FOLLOWING LIST DOES NOT INCLUDE STRUCTURAL ELEMENTS-

- COLD FORM METAL FRAMING FOR WALLS AND CEILINGS
- LADDERS

INCLUDE SIGNED SEALS FOR WORK DESIGNED BY DELEGATED DESIGNER. DO NOT START FABRICATION OF THE DELEGATED SYSTEM OR COMPONENT PART OR FIELD CONSTRUCTION AFFECTED BY THE SYSTEM OR COMPONENT PART WITHOUT SUBMITTAL APPROVAL BY THE CONTRACTING OFFICER.

ARCHITECTURAL ABBREVIATIONS

AB	ANCHOR BOLT
ACS PNL	ACCESS PANEL
ADJ	ADJUST
ALT	ALTERNATE, ALTITUDE
ALUM	ALUMINUM
ANOD	ANODIZED
APPROX	APPROXIMATE
ARCH	ARCHITECT
ASPH	ASPHALT
ATC	ACOUSTICAL TILE CEILING
BD	BOARD
BLDG	BUILDING
BLW	BELOW
BM	BEAM
BOS	BOTTOM OF SLAB / STEEL
BOT	BOTTOM
BRG	BEARING
BSMT	BASEMENT
BTWN	BETWEEN
C TO C	CENTER TO CENTER
C.I.P.	CAST IN PLACE
CAB	CABINET
CEM	CEMENT
CER	CERAMIC
CI	CAST IRON
CJ	CONTROL / CONSTRUCTION JOINT
CLG	CEILING
CLG REG	CEILING REGISTER
CLR	CLEAR
CMU	CONCRETE MASONRY UNIT
CND	CONDUIT
CNDS	CONDENSATE
CNSTR	CONSTRUCTION
CNTR	CNTR
CO	CLEANOUT
COL	COLUMN
CONC	CONCRETE
CONN	CONNECT
CONT	CONTINUE / CONTINUOUS
CORR	CORRIDOR
CPT	CARPET / COMMON PATH OF TRAVEL
CT	CERAMIC TILE
CTR	CENTER
D	DEPTH / DEEP
DEG	DEGREE
DEMO	DEMOLITION
DET	DETAIL
DIA	DIAMETER
DIM	DIMENSION
DR	DRAIN
DS	DOWNSPOUT
DW	DISHWASHER
DWG	DRAWING
E	EAST
EA	EACH
EIFS	EXTERIOR INSULATION & FINISH SYSTEM
EJ	EXPANSION JOINT
EL	ELEVATION
ELEC	ELECTRIC / ELECTRICAL
EPDM	ETHLENE PROPYLENE DIEN MONOMER
EQ	EQUAL
EQUIP	EQUIPMENT
EW	EACH WAY
EWC	ELECTRIC WATER COOLER
EXH	EXHAUST
EXIST	EXISTING
EXP	EXPANSION / EXPOSED / EXPAND
EXT	EXTERIOR
FD	FLOOR DRAIN
FDTN	FOUNDATION
FF	FINISH FACE
FG	FIGURE
FHC	FIRE HOUSE CABINET
FIN FLR	FINISHED FLOOR
FOF	FACE OF FINISH
FOM	FACE OF MASONRY
FOS	FACE OF STUB / FACE OF SLAB
FR	FRAME / FIRE RATING / FIRE RESISTANT
FT	FOOT, FEET
FTG	FOOTING
GA	GAUGE
GALV	GALVANIZED
GFCI	GOVERNMENT FURNISHED CONTRACTOR INSTALLED
GL	GLASS / GROUND LEVEL
GR	GROSS
GSU	GLAZED STRUCTURAL UNIT
GYP	GYPSUM
H	HIGH
HB	HOSE BIB
HDW	HARDWARE
HM	HOLLOW METAL
HORIZ	HORIZONTAL
HT	HEIGHT
HVY	HEAVY
ID	INSIDE DIAMETER
INSUL	INSULATION / INSULATED
INT	INTERIOR
J-BOX	JUNCTION BOX
JAN	JANITOR CLOSET
LAV	LAVATORY
LB	POUND
LT	LIGHT
MACH	MACHINE
MATL	MATERIAL
MAX	MAXIMUM
MECH	MECHANICAL
MFG	MANUFACTURING
MIN	MINIMUM / MINUTE
MISC	MISCELLANEOUS
ML	MATCH LINE
MO	MASONRY OPENING / MOTOR OPERATED
MTD	MOUNTED
MTG	MOUNTING / MEETING
MTL	METAL
MWP	MEMBRANE WATERPROOFING
N	NORTH
NIC	NOT IN CONTRACT
NO	NUMBER
NOM	NOMINAL
NTS	NOT TO SCALE
OA	OUTSIDE AIR
OC	ON CENTER
OD	OUTSIDE DIAMETER / DIMENSION
OPH	OPPOSITE HAND
OPNG	OPENING
OPP	OPPOSITE
OPT	OPTIONAL
PCT	PERCENT
PEJ	PREMOLDED EXPANSION JOINT
PL	PROPERTY LINE
PLAS	PLASTER / PLASTIC
PLYWD	PLYWOOD
PNL	PANEL
PRELIM	PRELIMINARY
PSF	POUNDS PER SQUARE FOOT
PSI	POUNDS PER SQUARE INCH
PT	PAINT
QT	QUARRY TILE
R	RADUIS / RISER
RA	RETURN AIR
RAD	RETURN AIR DUCT
RB	RESILIENT BASE
RD	ROOF DRAIN / ROAD
REFL	REFLECT
REFR	REFRIGERATION
REINF	REINFORCE
REQD	REQUIRED
REV	REVISION
RF	RESILIENT FLOORING
RL	ROOF LEADER
RM	ROOM
RND	ROUND
RO	ROUGH OPENING
RS	ROUGH SAWN
RT	RIGHT
S	SOUTH
SAPC	SUSPENDED ACOUSTICAL PANEL CEILING
SCHED	SCHEDULE
SECT	SECTION
SF	SQUARE FOOT
SH	SHINGLES / SINGLE HUNG
SIM	SIMILAR
SPC	SUSPENDED PLASTER CEILING
SPEC	SPECIFICATION
SQ	SQUARE
STD	STANDARD
STOR	STORAGE
STR	STRAIGHT STRIKE / STRINGERS
SUSP	SUSPENDED
T&B	TOP AND BOTTOM
T.O.CONC.	TOP OF CONCRETE
TEL	TELEPHONE
THRES	THRESHOLD
THRU	THROUGH
TOS	TOP OF SLAB / STEEL
TYP	TYPICAL
UON	UNLESS OTHERWISE NOTED
V	VOLT
V.I.F.	VERIFY IN FIELD
VAR	VARIATION
VB	VINYL BASE
VCT	VINYL COMPOSITION TILE
VENT	VENTILATION / VENTILATOR
VERT	VERTICAL
VEST	VESTIBULE
VS	VENT STACK
VTR	VENT THROUGH ROOF
VWC	VINYL WALL COVERING
W	WASTE / WATT / WEST / WIDE
W/	WITH
W/O	WITHOUT
WC	WATER CLOSET / WALL COVERING
WD	WOOD
WH	WATER HEATER
WP	WATERPROOFING / WEATHERPROOF / WORKING POINT
WSCT	WAINSCOT
WT	WEIGHT
WWF	WELDED WIRE FABRIC
XRMR	TRANSFORMER

SYM	DESCRIPTION	DATE	APPR

SEAL

A/E INFO

APPROVED

FOR COMMANDER NAVFAC

ACTIVITY
Approved by LCDR VINCE DEL GRECO, ROICC with PWD YORKTOWN, via Email.

SATISFACTORY TO DATE 03/26/2026

DES GJR | DRW GJR | CHK JEL

PM/DM MME/WJW

BRANCH MANAGER DJD

CHIEF ENG/ARCH JWJ

FIRE PROTECTION HPN

DEPARTMENT OF THE NAVY
NAVAL FACILITIES ENGINEERING SYSTEMS COMMAND
MID-LANT PDC CORE

NAVAL FACILITIES ENGINEERING SYSTEMS COMMAND - MID-ATLANTIC
NAVAL STATION - NORFOLK, VA

NAVAL WEAPONS STATION YORKTOWN, VIRGINIA
P171 WEAPON MAGAZINES
SEGREGATION FACILITIES

ARCHITECTURAL NOTES AND SYMBOLS

SCALE: AS NOTED

EPROJECT NO.: 1737010

CONSTR. CONTR. NO.

NAVFAC DRAWING NO. 12942062

SHEET 394 OF 499

AE001A

DRAWFORM REVISION: 25 AUGUST 2020

4/6/2026 1:17:26 PM AE001A
C:\Revit Local Files\P171-1737010-A-R21-SEG_gareth.ratti.rvt

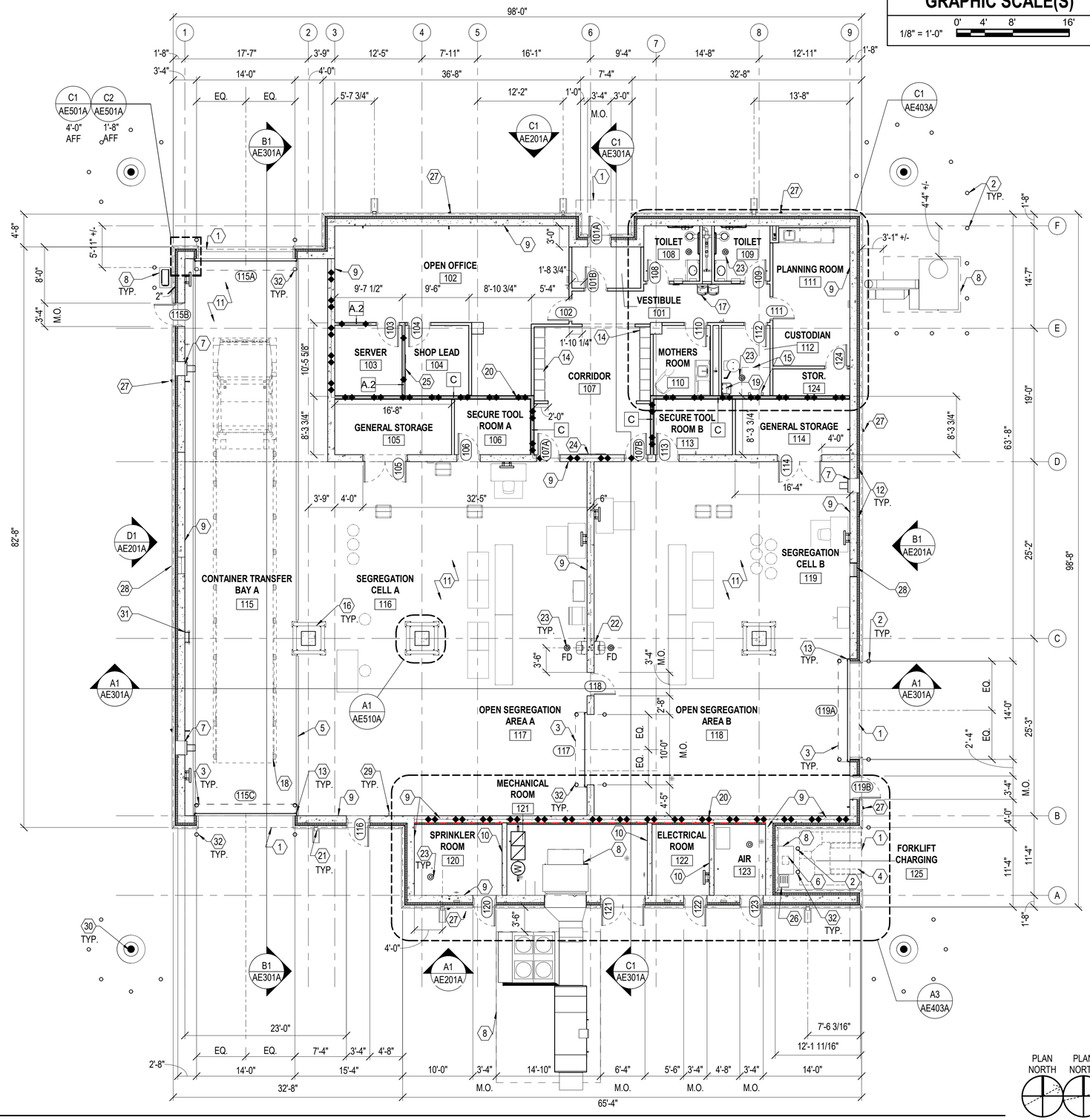

A1 FLOOR PLAN

SCALE: 1/8" = 1'-0"

GRAPHIC SCALE(S)

1/8" = 1'-0" 0' 4' 8' 16'

SHEET NOTES

A. THE DOOR AND FRAME SCHEDULE, TYPES, AND DETAILS ARE ON A-601A

B. FOR STRUCTURAL FRAMING, STEEL REINFORCING FOR CONCRETE WALLS, FLOOR SLAB AND BOLLARDS, SEE STRUCTURAL

C. METAL PANEL JOINT LOCATIONS AND PRECAST ARCHITECTURAL WATER TABLE JOINT LOCATIONS ARE INDICATED ON THE BUILDING ELEVATIONS SHEET A-201A

D. ALL INTERIOR GYPSUM WALL BOARD PARTITIONS WILL BE PARTION TYPE 'A' U.O.N. SEE AE510A FOR PARTITION TYPES AND DETAILS

E. SEE AE201A FOR FINISH SCHEDULE

KEYNOTES

1 LINE OF SOFFIT ABOVE

2 CONCRETE FILLED GALVANIZED STEEL BOLLARD (PT-03) TYP, SEE CIVIL

3 PREFINISHED METAL OVERHEAD DOOR (OH) HOOD GALVANIZED STEEL AND SUPPORT BRACKETS, COATED

4 OUTLINE OF FORKLIFT - N.I.C

5 4" WIDE PARKING SPACE LINE MARKING, COLOR: WHITE

6 BATTERY CHARGER - N.I.C - MOUNTED ON 4" CONCRETE PAD

7 INLINE FAN, SEE C4/AE602A

8 4" CONCRETE EQUIPMENT PAD

9 12" REINFORCED CONCRETE WALL - SEE STRUCTURAL

10 8" REINFORCED CONCRETE WALL - SEE STRUCTURAL

11 10" REINFORCED CONCRETE FLOOR SLAB. SEE STRUCTURAL

12 PREFINISHED INSULATED METAL WALL PANEL SYSTEM. ANCHOR TO REINFORCED CONCRETE BEARING WALL. CAVITY WALL ASSEMBLY BELOW WITH ARCHITECTURAL PRECAST WATER TABLE AND 4" GROUND FACE CMU SHOWN DASHED BELOW

13 OVERHEAD DOOR TRACK, STAINLESS STEEL

14 PERSONNEL LOCKER

15 ROOF ACCESS LADDER AND HATCH ABOVE. SEE DETAIL A3/AE502A

16 COLUMN PROTECTION SYSTEM, SEE AE510A

17 HIGH-LOW DRINKING FOUNTAIN, SEE PLUMBING

18 OUTLINE OF FLATBED TRACTOR-TRAILOR - N.I.C

19 JANITOR MOP SINK AND UTILITY SHELF ABOVE

20 2 HOUR RATED FIRE BARRIER

21 PREFINISHED 4"x6" METAL DOWNSPOUT TO SPLASH BLOCK

22 EMERGENCY SHOWER/ EYEWASH STATION, ANCHOR TO CONC. WALL

23 FLOOR DRAIN, SEE PLUMBING

24 BULLETIN TACK BOARD (48W x 36H), INSTALL 42"AFF TO BOTTOM EDGE

25 MARKER BOARD (48W X 36H), INSTALL 42"AFF TO BOTTOM EDGE

26 PORTABLE EYE WASH STATION

27 HOSE BIBB, SEE C5/AE504A

28 12" x 12" LOUVER ASSEMBLY

29 FIRE EXTINGUISHER, MOUNTED TO BRACKET, 4'-0" AFF. TO CARRYING HANDLE. MOUNTING BRACKETS, FIRE EXTINGUISHERS AND OPERATING INSTRUCTION

30 LIGHTNING PROTECTION MAST, TYP. OF 4, SEE EG101A AND SB502A

31 FIXED LADDER AT CATWALK ACCESS. SEE A3/SF402A

32 SEE SB502A FOR BOLLARDS AT OH DOORS AND FORKLIFT CHARGING

SYM	DESCRIPTION	DATE	APPR

SEAL

A/E INFO

APPROVED

FOR COMMANDER NAVFAC

ACTIVITY: Approved by LCDR VINCE DEL GRECO, ROICC with PWD YORKTOWN, via Email,

SATISFACTORY TO DATE 03/26/2026

DES GJR | DRW GJR | CHK JEL

PM/DM MME/WJW

BRANCH MANAGER DJD

CHIEF ENG/ARCH JWJ

FIRE PROTECTION HPN

DEPARTMENT OF THE NAVY
NAVAL FACILITIES ENGINEERING SYSTEMS COMMAND - MID-ATLANTIC
MIDLANT PDC CORE
NAVAL FACILITIES ENGINEERING SYSTEMS COMMAND
NAVAL STATION - NORFOLK, VA
NAVAL WEAPONS STATION
YORKTOWN, VIRGINIA
P171 WEAPON MAGAZINES
SEGREGATION FACILITIES
FLOOR PLAN

SCALE: AS NOTED

EPROJECT NO.: 1737010

CONSTR. CONTR. NO.

NAVFAC DRAWING NO. 12942063

SHEET 395 OF 499

AE101A

DRAWFORM REVISION: 25 AUGUST 2020

4/1/2026 2:21:46 PM
C:\Revit Local Files\P171-173701b-A-R21-SEG_gareth.ratti.rvt
AE101A

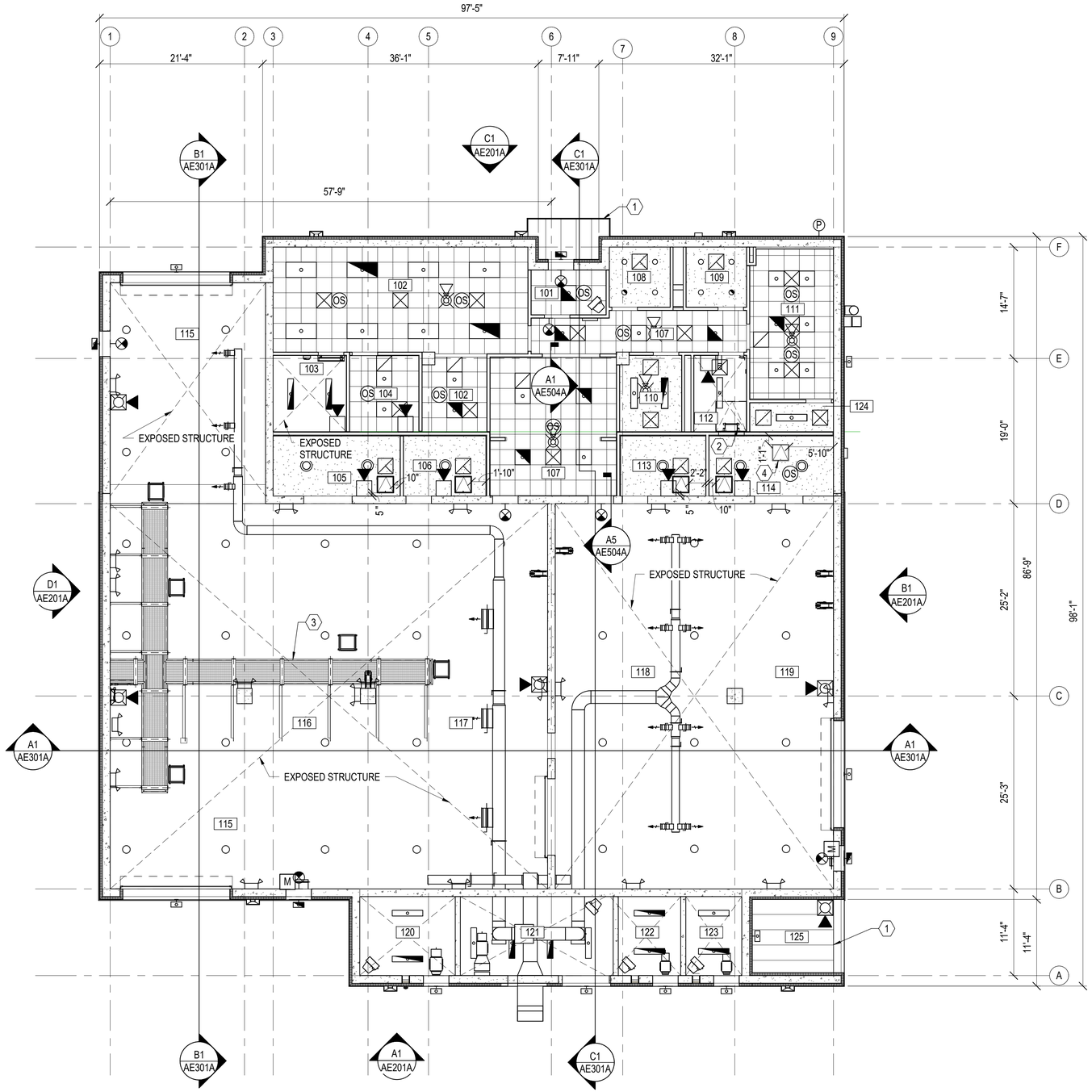

A1 1ST FLOOR REFLECTED CEILING PLAN

SCALE: 1/8" = 1'-0"

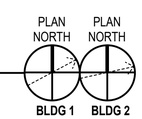

SHEET NOTES

A. REFER TO SHEET A-001 FOR ARCHITECTURAL SYMBOLS, LEGENDS, ABBREVIATIONS, AND GENERAL NOTES.

B. CENTER LIGHTING FIXTURES (BOTH WAYS) UNLESS OTHERWISE NOTED.

C. ALL CEILINGS ARE 9'-0" AFF. UNLESS OTHERWISE NOTED

KEYNOTES

1 INSULATED METAL SOFFIT PANEL. SEE A3/AE503A

2 4'-0" x 4'-0" ROOF ACCESS - SLAB OPENING ABOVE

3 EQUIPMENT CATWALK, SEE STRUCTURAL

4 2'-0" x 2'-0" ACCESS PANEL

REFLECTED CEILING PLAN LEGEND

SYMBOL	DESCRIPTION
	NO CEILING - EXPOSED TO ROOF DECK ABOVE.
	2' - 0" X 2' - 0" ACOUSTICAL CEILING TILE.
	GYPSUM BOARD CEILING.
	METAL SOFFIT PANEL.
	LIGHT FIXTURE. REFER TO ELECTRICAL DRAWINGS.
	EMERGENCY LIGHT FIXTURE. REFER TO ELECTRICAL DRAWINGS.
	EXIT SIGN. REFER TO ELECTRICAL DRAWINGS.
OS	OCCUPANCY SENSOR. REFER TO ELECTRICAL DRAWINGS.
	CEILING SPEAKER AND WALL MOUNTED SPEAKER STROBE. REFER TO FIRE PROTECTION DRAWINGS.
	CEILING SUPPLY DIFFUSER. REFER TO MECHANICAL DRAWINGS.
	CEILING RETURN OR EXHAUST. REFER TO MECHANICAL DRAWINGS.
	CEILING MOUNTED ACCES DOOR.

ROOM SCHEDULE

NUMBER	NAME
101	VESTIBULE
102	OPEN OFFICE
103	SERVER
104	SHOP LEAD
105	GENERAL STORAGE
106	SECURE TOOL ROOM A
107	CORRIDOR
108	TOILET
109	TOILET
110	MOTHERS ROOM
111	PLANNING ROOM
112	CUSTODIAN
113	SECURE TOOL ROOM B
114	GENERAL STORAGE
115	CONTAINER TRANSFER BAY A
116	SEGREGATION CELL A
117	OPEN SEGREGATION AREA A
118	OPEN SEGREGATION AREA B
119	SEGREGATION CELL B
120	SPRINKLER ROOM
121	MECHANICAL ROOM
122	ELECTRICAL ROOM
123	AIR
124	STOR.
125	FORKLIFT CHARGING

GRAPHIC SCALE(S)

1/8" = 1' - 0" 0 5' 10' 15' 30'

SYM	DESCRIPTION	DATE	APPR

NAVFAC

SEAL

A/E INFO

APPROVED

FOR COMMANDER NAVFAC

ACTIVITY
Approved by LCDR VINCE DEL GRECO, ROICC with PWD YORKTOWN, via Email,

SATISFACTORY TO DATE 03/26/2026

DES GJR	DRW GJR	CHK JEL

PM/DM MME/WJW

BRANCH MANAGER DJD

CHIEF ENG/ARCH JWJ

FIRE PROTECTION HPN

DEPARTMENT OF THE NAVY
NAVAL FACILITIES ENGINEERING SYSTEMS COMMAND
MIDLANT PDC CORE

NAVAL FACILITIES ENGINEERING SYSTEMS COMMAND - MID-ATLANTIC
NAVAL STATION - NORFOLK, VA

NAVAL WEAPONS STATION
YORKTOWN, VIRGINIA

P171 WEAPON MAGAZINES
SEGREGATION FACILITIES

REFLECTED CEILING PLAN

SCALE: AS NOTED

EPROJECT NO.: 1737010

CONSTR. CONTR. NO.

NAVFAC DRAWING NO.
12942064

SHEET 396 OF 499

AE102A

DRAWFORM REVISION: 25 AUGUST 2020

4/1/2026 2:21:51 PM
C:\Revit Local Files\P171-1737010-A-R21-SEG_gareth.ratti.rvt

AE102A

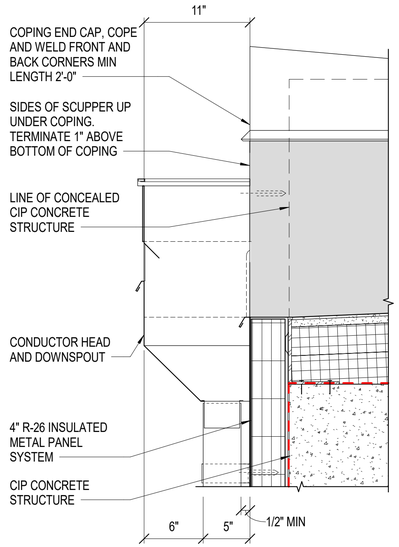

COMBINED CONDUCTOR HEAD AND OVERFLOW SCUPPER SECTION

C1 SCALE: 1 1/2" = 1'-0" (AE103A)

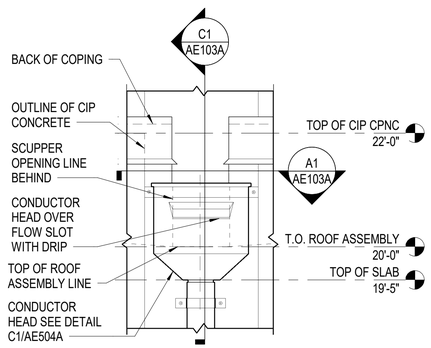

COMBINED CONDUCTOR HEAD AND OVERFLOW SCUPPER - ELEV

B1 SCALE: 3/4" = 1'-0" (AE201A)

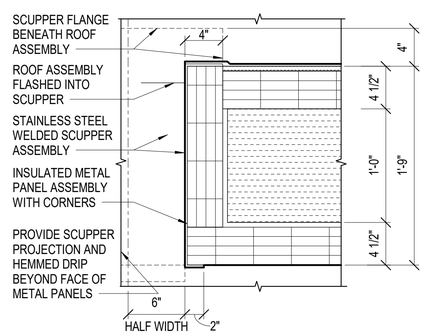

ENLARGED PLAN - SCUPPER

A1 SCALE: 1 1/2" = 1'-0" (AE103A)

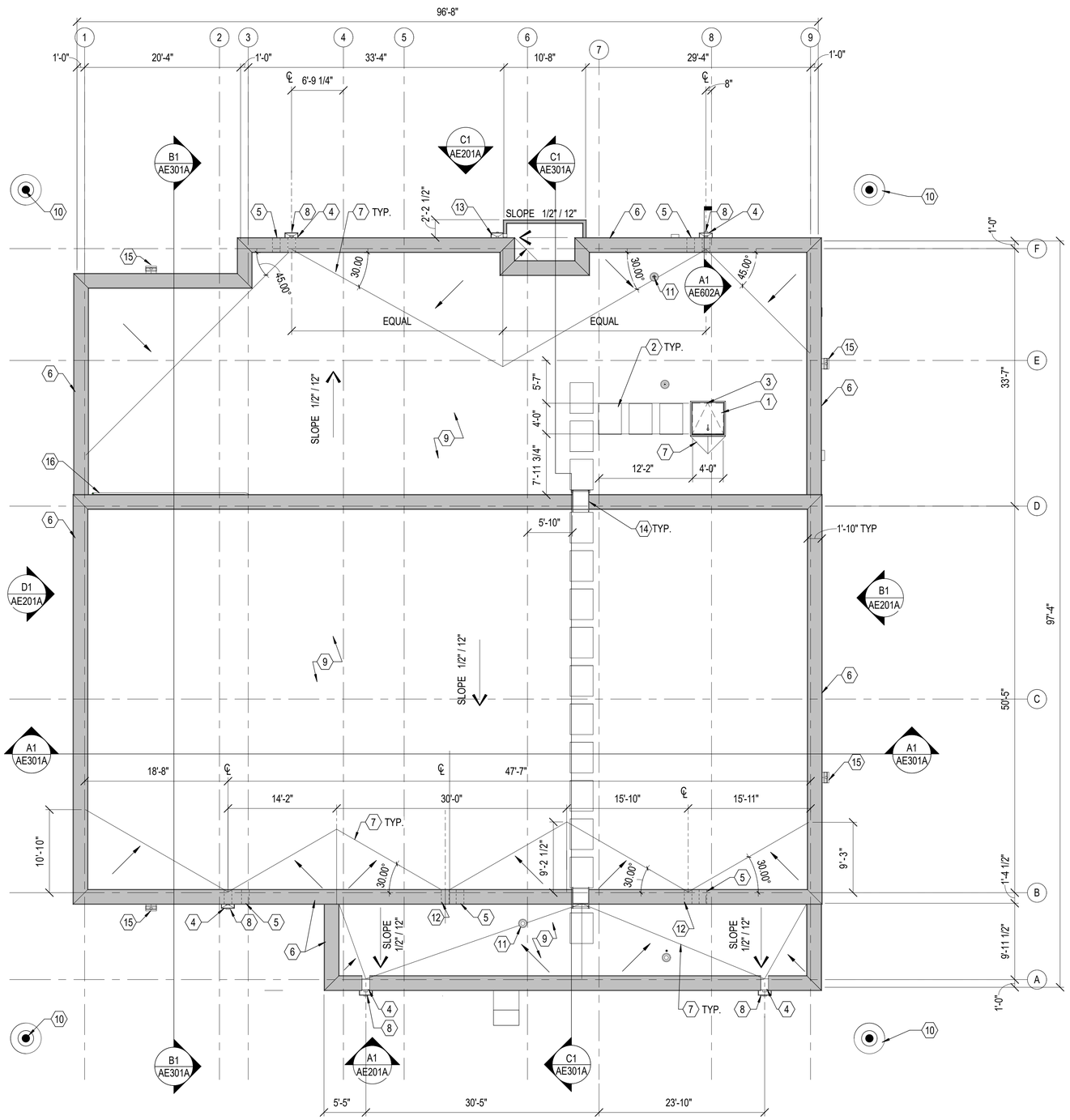

ROOF PLAN

A2 SCALE: 1/8" = 1'-0"

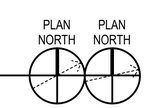

SHEET NOTES

A. REFER TO STRUCTURAL FOR FRAMING PLAN

B. ROOFS WALKPADS ARE SHOWN ON ARCHITECTURAL DRAWINGS FOR DESIGN INTENT PURPOSES ONLY. SEE MANUFACTURER'S SUPPLEMENTAL FOR ROOFING DETAILS AND LOCATIONS OF ROOFING ACCESSORIES, INCLUDING SNOW.

C. REFER TO SF102A FOR TOP OF CONCRETE ROOF SLABS AND TOP OF CONCRETE PARAPETS.

D. REFER TO STRUCTURAL FOR STEEL REINFORCING FOR CONCRETE ROOF SLAB

KEYNOTES

#	
1	PRE-FINISHED METAL ROOF HATCH WITH NON-PENETRATING HATCH GUARD RAIL SYSTEM, SEE DETAIL C1/AE502A
2	3'-0" x 4'-0" WIDE ROOF WALK PADS, SPACING BETWEEN PAD EDGE 12" MAX.
3	4'-0" x 4'-0" ROOF SLAB OPENING SHOWN DASHED
4	1'-0" WIDE THROUGHWALL SCUPPER SLOT WITH CONDUCTOR HEAD - SEE A1/AE502A
5	8"X12" OVERFLOW SCUPPER - SEE A1/AE502A
6	PREFINISHED ALUMINUM COPING
7	ROOF CRICKET 1" TO 1'-0" TAPERED INSULATION
8	PREFINISHED 4"x6" METAL DOWNSPOUTS TO SPLASH BLOCK
9	2-PLY FULLY ADHERED MODIFIED BITUMEN ROOF SYSTEM
10	LIGHTNING PROTECTION MAST, TYP. OF 4, SEE EG101A AND SB502A FOR BASE PLATE AND ANCHOR DETAILS
11	VENT THROUGH ROOF, SEE PLUMBING DRAWINGS AND DETAIL B1/AE502A
12	1'-0" WIDE THROUGHWALL SCUPPER TO SPLASH PAN - SEE A1/AE502A SIM
13	8"X12" THROUGHWALL SCUPPER WITH CONDUCTOR HEAD - SEE C1/AE503A
14	PARAPET ROOF LADDER, PLATFORM AND RETURN. SEE A5/AE504A
15	WALL MOUNTED LIGHT FIXTURE, SEE ELECTRICAL DRAWINGS
16	EXTERIOR CONDUIT ROUTE FOR DAS ANTENNA

GRAPHIC SCALE(S)

1 1/2" = 1' - 0" 0 3" 6" 9" 1' 2'

3/4" = 1' - 0" 0 6" 1' 2' 3' 4' 5'

1/8" = 1' - 0" 0 5' 10' 15' 30'

SYM	DESCRIPTION	DATE	APPR

NAVFAC

SEAL

A/E INFO

APPROVED
Gerard D. Gagnon, P.E.
FOR COMMANDER NAVFAC

ACTIVITY
Approved by LCDR VINCE DEL GRECO, ROICC with PWD YORKTOWN, via Email,

SATISFACTORY TO DATE 03/26/2026

DES GJR DRW GJR CHK JEL
PM/DM MME/WJW
BRANCH MANAGER DJD
CHIEF ENG/ARCH JWJ
FIRE PROTECTION HPN

DEPARTMENT OF THE NAVY
NAVAL FACILITIES ENGINEERING SYSTEMS COMMAND
MIDLANT PDC CORE
NAVAL FACILITIES ENGINEERING SYSTEMS COMMAND - MID-ATLANTIC
NAVAL STATION - NORFOLK, VA
NAVAL WEAPONS STATION
YORKTOWN, VIRGINIA
P171 WEAPON MAGAZINES
SEGREGATION FACILITIES
ROOF PLAN

SCALE: AS NOTED
EPROJECT NO.: 1737010
CONSTR. CONTR. NO.
NAVFAC DRAWING NO. 12942065
SHEET 397 OF 499

AE103A

DRAWFORM REVISION: 25 AUGUST 2020

4/1/2026 2:21:56 PM
C:\Revit Local Files\P171-1737010-A-R21-SEG_gareth.ratti.rvt
AE103A

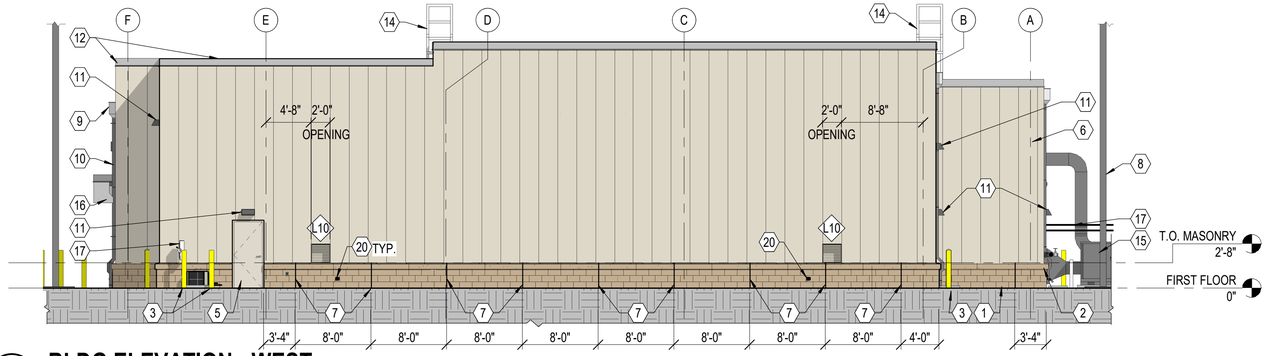

D1 BLDG ELEVATION - WEST

SCALE: 1/8" = 1'-0" (AE101A)

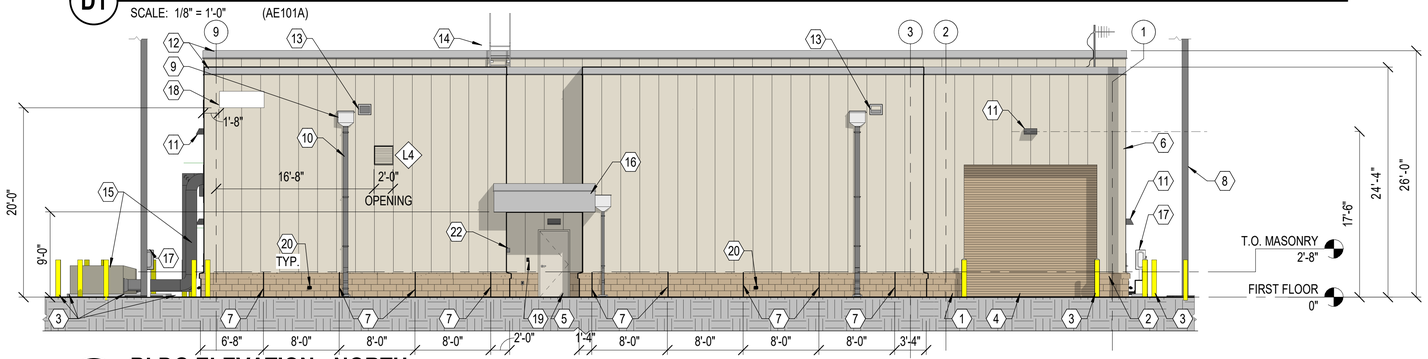

C1 BLDG ELEVATION - NORTH

SCALE: 1/8" = 1'-0" (AE101A)

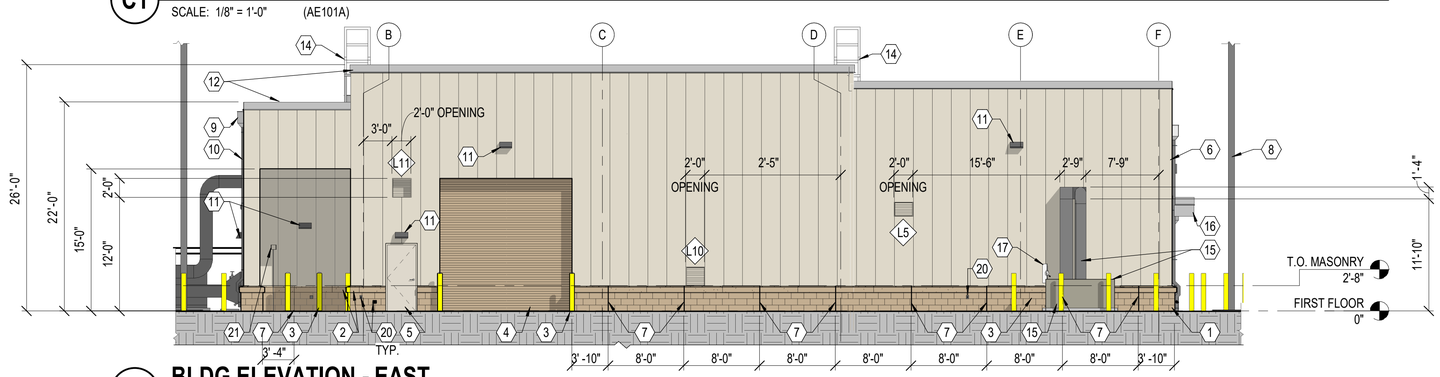

B1 BLDG ELEVATION - EAST

SCALE: 1/8" = 1'-0" (AE101A)

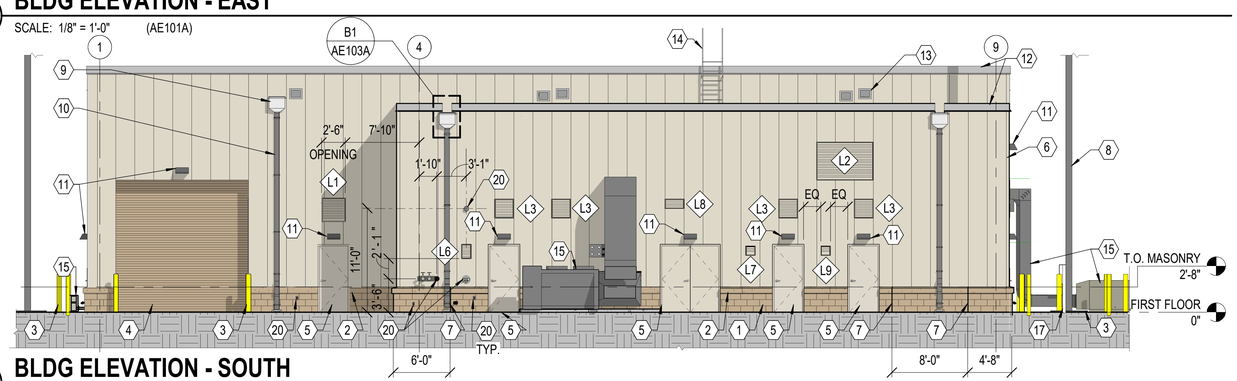

A1 BLDG ELEVATION - SOUTH

SCALE: 1/8" = 1'-0" (AE101A)

SHEET NOTES

A. SEE DOOR AND FRAME SCHEDULE, TYPES AND DETAILS ON AE601A

B. USE THE FEDERAL STANDARD NUMBER TO MATCH ALL COLORS LISTED ON THE EXTERIOR FINISH SCHEDULE

C. SEE LOUVER SCHEDULE, TYPES AND DETAILS ON AE603A

D. SEE A5/AE510A FOR TYPICAL DUCT PENETRATION THROUGH BUILDING ENVELOPE

KEYNOTES

1 4" GROUND FACE CMU (CMU-01) PROVIDE 'L' SHAPE CORNER BLOCKS WITH 8" RETURN THROUGHOUT

2 PRECAST ACCENT BAND (PAB-01) SEE AE502A FOR DETAILS

3 CONCRETE FILLED STEEL BOLLARD (PT-03)

4 PREFINISHED METAL OVERHEAD COILING DOOR (PT-01)

5 SOLID CORE HOLLOW METAL DOOR AND FRAME (PT-02)

6 2'-0" WIDE PREFINISHED INSULATED METAL WALL PANEL (MP-01)

7 MASONRY CONTROL JOINT. SEE DETAIL A5/AE501A

8 LIGHTNING PROTECTION MAST, TYP. OF 4, SEE EG101A. FULL HEIGHT NOT SHOWN FOR CLARITY

9 8"X12" THROUGHWALL SCUPPER WITH CONDUCTOR HEAD

10 PREFINISHED 4"x6" METAL DOWNSPOUTS AND SPLASH BLOCKS. SEE B4/AE503A

11 EXTERIOR LIGHTING, SEE C4/AE503A AND D4/AE503A AND ELECTRICAL DRAWINGS

12 PRE-FINISHED METAL COPING - FACTORY MITER AND WELD CORNERS. COLOR TO MATCH ENTRANCE CANOPY

13 8" X 12" THROUGH WALL OVERFLOW SCUPPER

14 PARAPET ROOF LADDER, PLATFORM AND RETURN. COLOR TO MATCH ENTRANCE CANOPY. SEE A5/AE503A

15 AIR HANDLER UNIT AND MECHANICAL EQUIPMENT. PROVIDE STAINLESS STEEL DUCT SUPPORT. SEE MECHANICAL

16 ENTRANCE CANOPY. SEE A3/AE503A

17 PROVIDE STAINLESS STEEL SUPPORT STRUCTURE FOR FREE STANDING ELECTRICAL DISCONNECT AND SUPPORT

18 BUILDING IDENTIFICATION SIGNAGE IN ACCORDANCE WITH THE INSTALLATION APPEARANCE PLAN (IAP) SEE A4/AE503A

19 PROVIDE DEVICE/ APPURTENANCE, E.G.CARD READER, PHOTOCELL, PENETRATION SIMILAR TO C3 AND C4/AE503A, EXCEPT PROVIDE EXTERIOR JUNCTION BOX SIZE COORDINATED WITH DEVICE CRITERIA AND ADDITIONAL THERMALLY BROKEN SUPPORT AT MOUNTING ANCHOR POINTS

20 CENTER OF STAINLESS STEEL PIPE SLEEVE FOR FIRE PROTECTION, PLUMBING, MECHANICAL, OR ELECTRICAL PIPE OR CONDUIT

21 PORTABLE EYE WASH STATION

22 KNOX BOX, SEE FIRE PROTECTION

EXTERIOR FINISH SCHEDULE

CODE	MATERIAL	FEDERAL STANDARD COLOR #	COLOR
PAB-01	PRECAST ACCENT BAND	33510	DARK BEIGE
CMU-01	GROUND FACE CMU	33510	DARK BEIGE
MP-01	METAL WALL PANEL	27722	LIGHT BEIGE
PT-01	OVERHEAD DOOR	33510	DARK BEIGE
PT-02	DOOR	27722	LIGHT BEIGE
PT-03	BOLLARD	13591	SAFETY YELLOW
MP-02	METAL CANOPY	17178	SILVER

GRAPHIC SCALE(S)

1/8" = 1' - 0" 0 5' 10' 15' 30'

SYM	DESCRIPTION	DATE	APPR

SEAL

A/E INFO

APPROVED

FOR COMMANDER NAVFAC

ACTIVITY
Approved by LCDR VINCE DEL GRECO, ROICC with PWD YORKTOWN, via Email,

SATISFACTORY TO DATE 03/26/2026

DES GJR DRW GJR CHK JEL

PM/DM MME/WJW

BRANCH MANAGER DJD

CHIEF ENG/ARCH JWJ

FIRE PROTECTION HPN

DEPARTMENT OF THE NAVY
NAVAL FACILITIES ENGINEERING SYSTEMS COMMAND
MIDLANT PDC CORE
NAVAL FACILITIES ENGINEERING SYSTEMS COMMAND - MID-ATLANTIC
NAVAL STATION - NORFOLK, VA
NAVAL WEAPONS STATION
YORKTOWN, VIRGINIA
P171 WEAPON MAGAZINES
SEGREGATION FACILITIES
BUILDING ELEVATIONS

SCALE: AS NOTED

EPROJECT NO.: 1737010

CONSTR. CONTR. NO.

NAVFAC DRAWING NO. 12942066

SHEET 398 OF 499

AE201A

DRAWFORM REVISION: 25 AUGUST 2020

4/8/2026 8:42:08 AM AE201A
C:\Revit Local Files\P171-1737010-A-R21-SEG_gareth.ratti.rvt

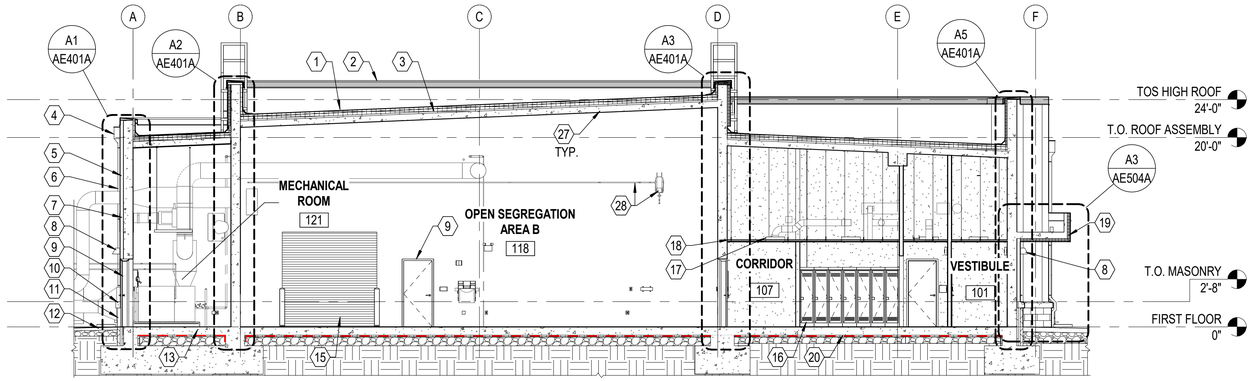

C1 BUILDING SECTION - LONGITUDINAL

SCALE: 1/8" = 1'-0" (AE101A)

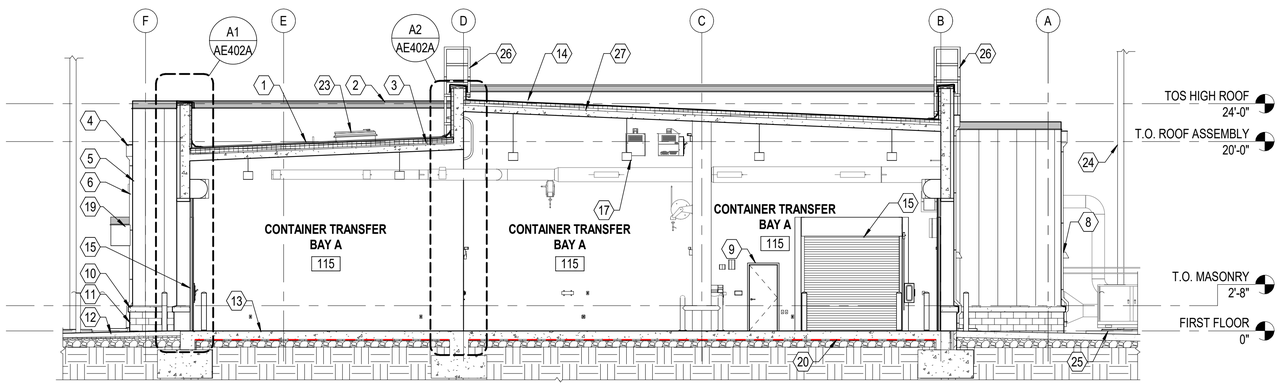

B1 BUILDING SECTION - LONGITUDINAL

SCALE: 1/8" = 1'-0" (AE101A)

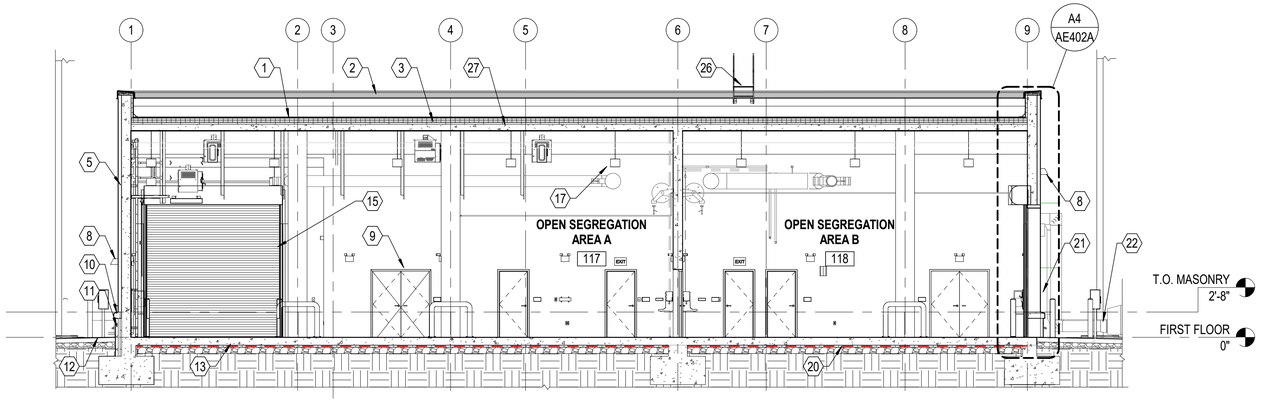

A1 BUILDING SECTION - TRANSVERSE

SCALE: 1/8" = 1'-0" (AE101A)

SHEET NOTES

A. FOR STRUCTURAL FRAMING OF WALLS AND ROOF, SEE STRUCTURAL DRAWINGS

B. SEE CIVIL DRAWINGS FOR FINISHED GRADE ELEVATIONS

C. SEE SHEET AE601A FOR DOOR SCHEDULE, DOOR AND FRAME TYPES

D. SEE SHEET AE603A FOR LOUVER SCHEDULE, TYPE AND DETAILS

E. COLD FORM METAL FRAMING AND BRACING NOT SHOWN FOR CLARITY

KEYNOTES

1 FULLY ADHERED 2-PLY MODIFIED BITUMEN ROOF SYSTEM

2 PRE-FINISHED METAL COPING - FACTORY MITER AND WELD CORNERS

3 CONTINUOUS VAPOR PERMEABLE FLUID APPLIED AIR BARRIER TOP, FRONT, AND BACK OF PARAPET

4 8"X12" THROUGHWALL SCUPPER WITH CONDUCTOR HEAD

5 PREFINISHED INSULATED METAL WALL PANEL

6 PREFINISHED 4"x6" METAL DOWNSPOUTS (EQUALLY SPACED) TO SPLASH BLOCK

7 LOUVER AS SCHEDULED, SEE AE603A

8 EXTERIOR LIGHTING, SEE ELECTRICAL

9 HOLLOW METAL DOOR AND FRAME AS SCHEDULED

10 PRECAST ACCENT BAND, SEE AE502A FOR PRE CAST BAND DETAILS

11 4" GROUND FACE CMU

12 FINISH GRADE, SEE CIVIL DWGS

13 10" STRUCTURAL REINFORCED CONCRETE SLAB

14 ROOF TRAFFIC WALK PAD

15 PREFINISHED METAL OVERHEAD COILING DOOR

16 PERSONNEL LOCKER

17 CEILING SUSPENDED LIGHT FIXTURE, SEE ELECTRICAL DRAWINGS

18 CEILING AS SCHEDULED

19 ENTRY CANOPY, CLAD IN PREFINISHED INSULATED METAL PANEL. SEE A3/AE503A

20 VAPOR BARRIER

21 GALVANIZED STEEL STRUCTURE DISCONNECT SWITCH, SEE ELECTRICAL

22 HEAT PUMP, SEE MECHANICAL

23 PRE-FINISHED 4'-0" x 4'-0" METAL ROOF HATCH WITH NON-PENETRATING HATCH GUARD RAIL SYSTEM, SEE DETAIL C1/AE502A

24 LIGHTNING PROTECTION MAST, TYP. OF 4, SEE EG101A. FULL HEIGHT NOT SHOWN FOR CLARITY

25 4" CONCRETE EQUIPMENT PAD

26 PARAPET ROOF LADDER, PLATFORM AND RETURN

27 8" STRUCTURAL REINFORCED CONCRETE SLAB

28 CEILING MOUNTED LIGHT FIXTURE, SEE ELECTRICAL DRAWINGS

GRAPHIC SCALE(S)

1/8" = 1' - 0" 0 5' 10' 15' 30'

SYM	DESCRIPTION	DATE	APPR

NAVFAC

SEAL

A/E INFO

APPROVED

FOR COMMANDER NAVFAC

ACTIVITY Approved by LCDR VINCE DEL GRECO, ROICC with PWD YORKTOWN, via Email,

SATISFACTORY TO DATE 03/26/2026

DES GJR | DRW GJR | CHK JEL

PM/DM MME/WJW

BRANCH MANAGER DJD

CHIEF ENG/ARCH JWJ

FIRE PROTECTION HPN

DEPARTMENT OF THE NAVY
NAVAL FACILITIES ENGINEERING SYSTEMS COMMAND
MIDLANT PDC CORE
NAVAL FACILITIES ENGINEERING SYSTEMS COMMAND - MID-ATLANTIC
NAVAL STATION - NORFOLK, VA
NAVAL WEAPONS STATION
YORKTOWN, VIRGINIA
P171 WEAPON MAGAZINES
SEGREGATION FACILITIES
BUILDING SECTIONS

SCALE: AS NOTED

EPROJECT NO.: 1737010

CONSTR. CONTR. NO.

NAVFAC DRAWING NO. 12942067

SHEET 399 OF 499

AE301A

DRAWFORM REVISION: 25 AUGUST 2020

4/1/2026 2:22:16 PM AE301A
C:\Revit Local Files\P171-1737010-A-R21-SEG_gareth.ratti.rvt

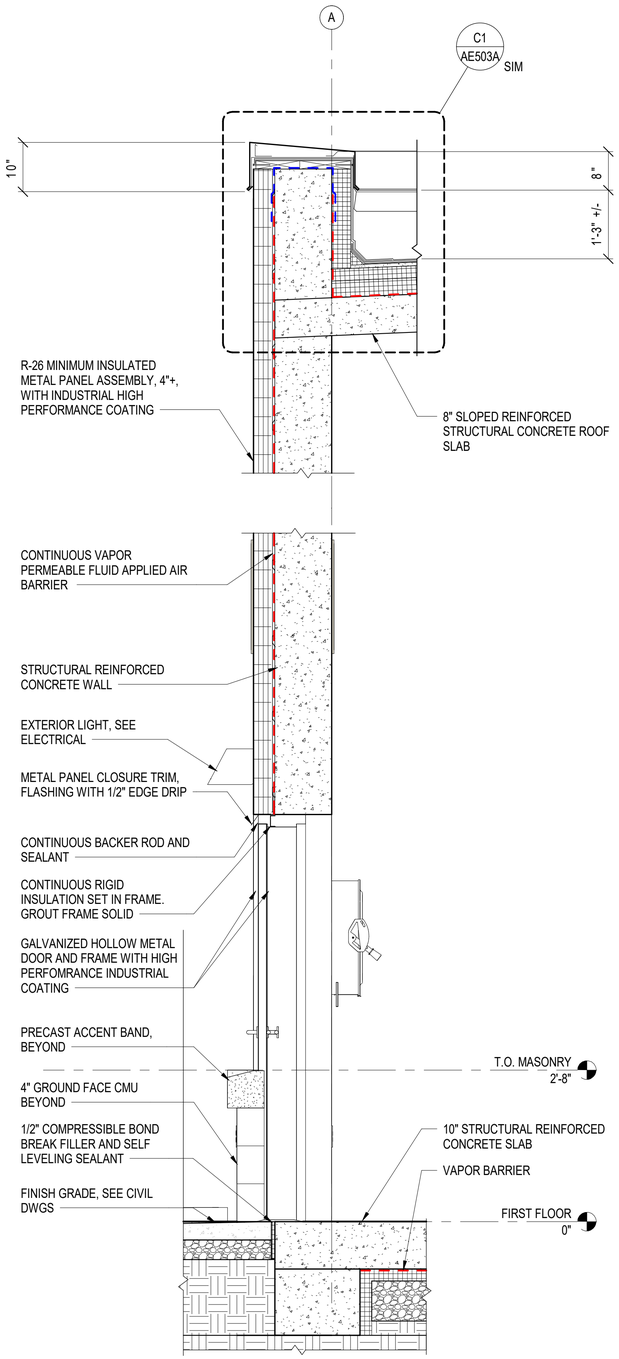

A1 WALL SECTION

SCALE: 3/4" = 1'-0" (AE301A)

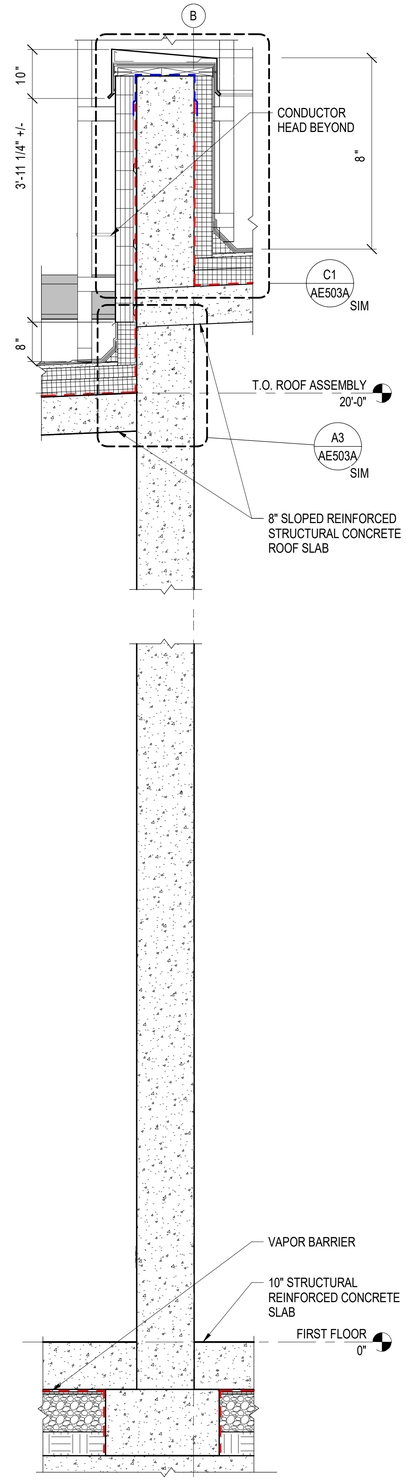

A2 WALL SECTION

SCALE: 3/4" = 1'-0" (AE301A)

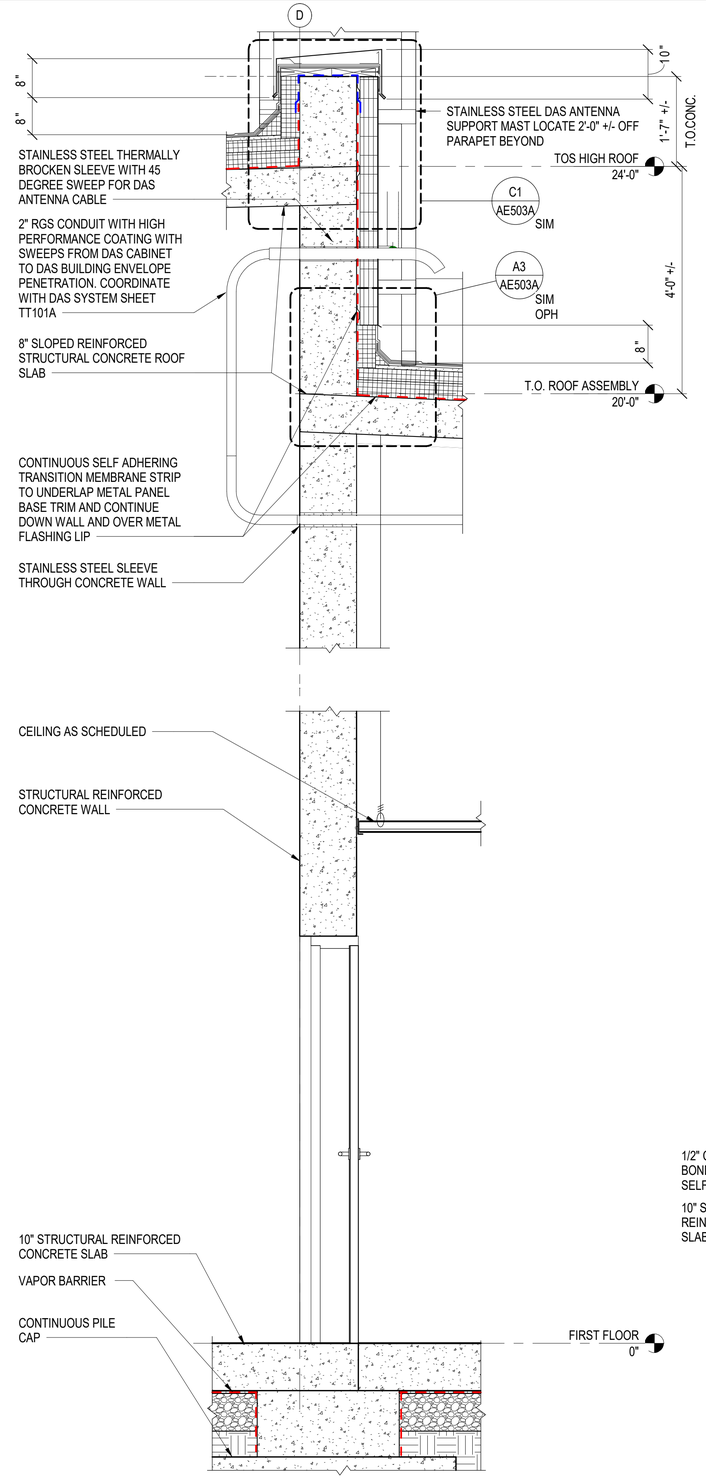

A3 WALL SECTION

SCALE: 3/4" = 1'-0" (AE301A)

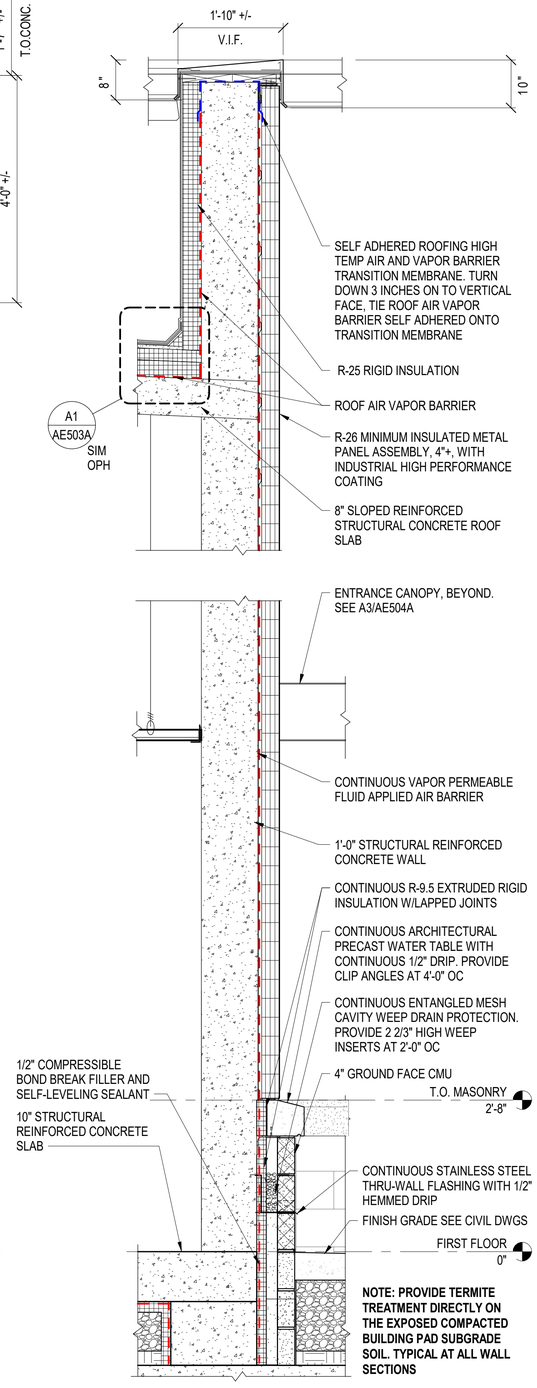

A5 WALL SECTION

SCALE: 3/4" = 1'-0" (AE301A)

GRAPHIC SCALE(S)

3/4" = 1' - 0" 0 6" 1' 2' 3' 4' 5'

SYM	DESCRIPTION	DATE	APPR

SEAL

A/E INFO

APPROVED

FOR COMMANDER NAVFAC

ACTIVITY: Approved by LCDR VINCE DEL GRECO, ROICC with PWD YORKTOWN, via Email.

SATISFACTORY TO DATE 03/26/2026

DES GJR	DRW GJR	CHK JEL	
PM/DM	MME/WJW		
BRANCH MANAGER	DJD		
CHIEF ENG/ARCH	JWJ		
FIRE PROTECTION	HPN		

DEPARTMENT OF THE NAVY
NAVAL FACILITIES ENGINEERING SYSTEMS COMMAND
MIDLANT PDC CORE
NAVAL FACILITIES ENGINEERING SYSTEMS COMMAND - MID-ATLANTIC
NAVAL STATION - NORFOLK, VA
NAVAL WEAPONS STATION YORKTOWN, VIRGINIA
P171 WEAPON MAGAZINES SEGREGATION FACILITIES
WALL SECTIONS

SCALE: AS NOTED
EPROJECT NO.: 1737010
CONSTR. CONTR. NO.
NAVFAC DRAWING NO. 12942068
SHEET 400 OF 499

AE401A

DRAWFORM REVISION: 25 AUGUST 2020

4/20/2026 8:39:45 AM AE401A
C:\Revit Local Files\P171-1737010-A-R21-SEG_gareth.ratti.rvt

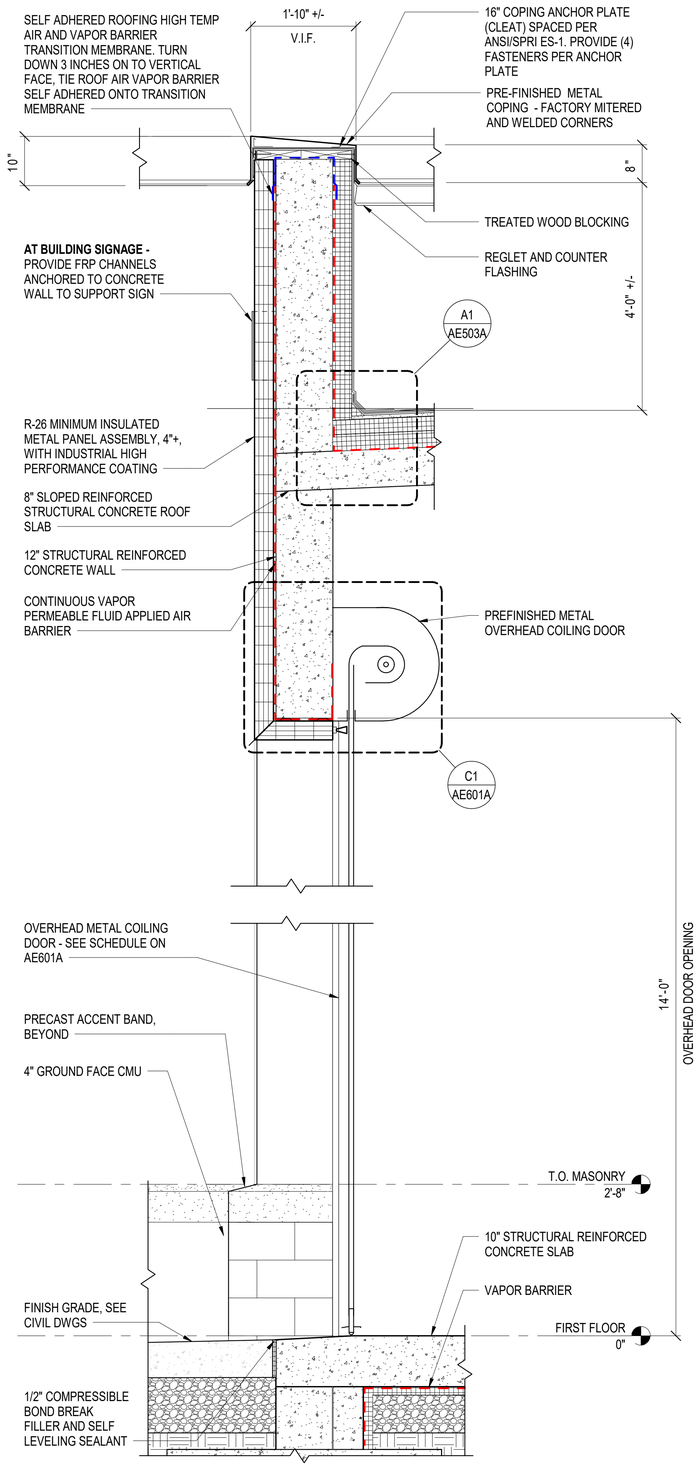

A1 WALL SECTION
SCALE: 3/4" = 1'-0" (AE301A)

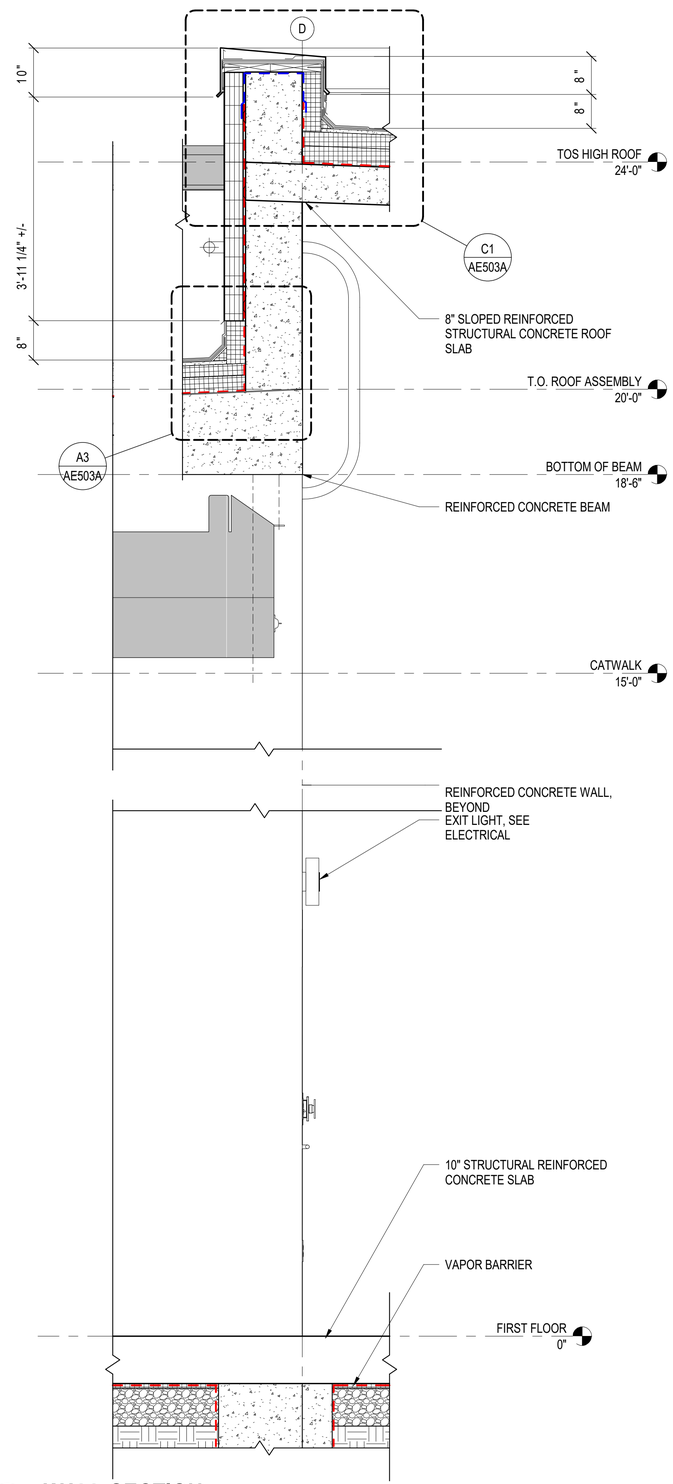

A2 WALL SECTION
SCALE: 3/4" = 1'-0" (AE301A)

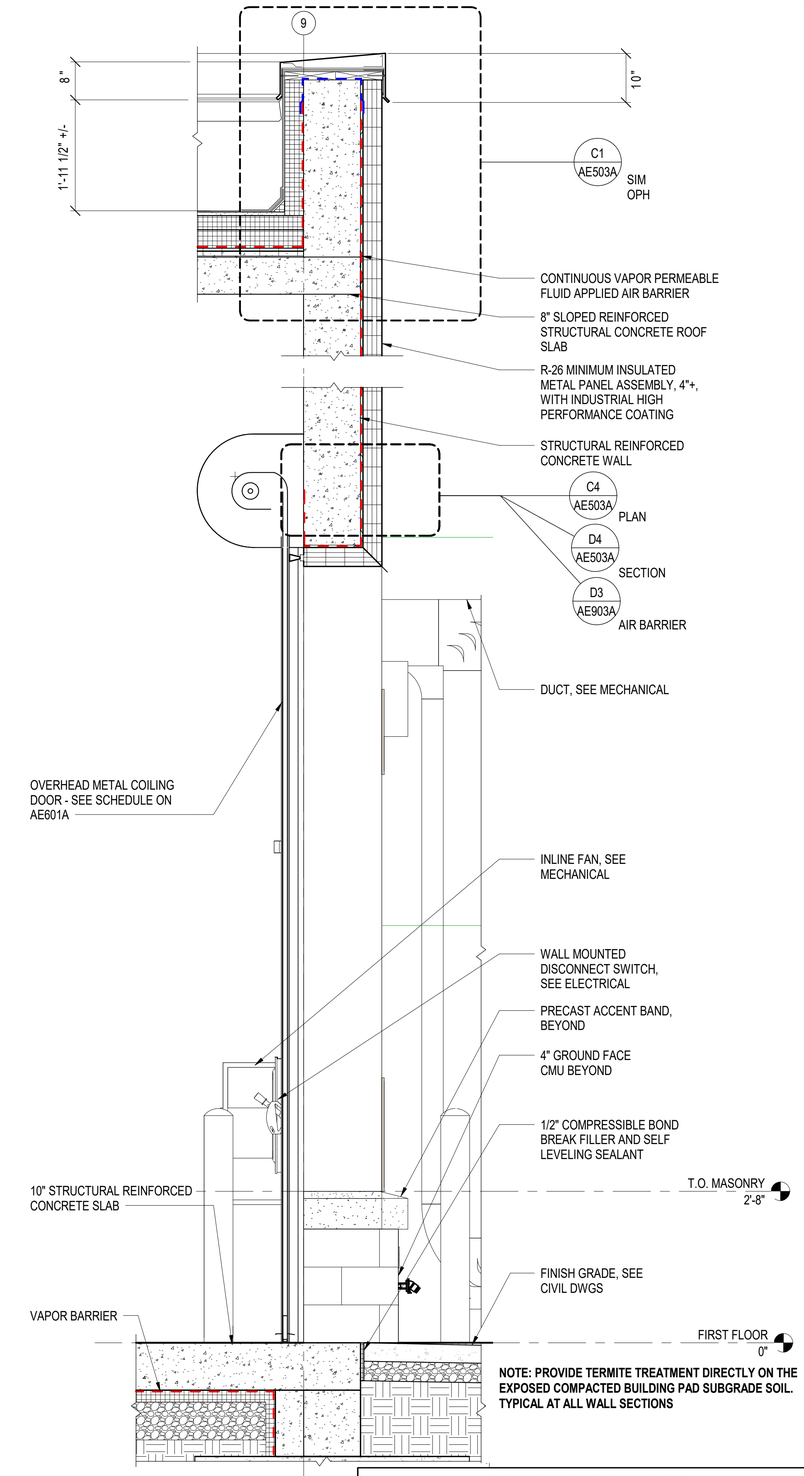

NOTE: PROVIDE TERMITE TREATMENT DIRECTLY ON THE EXPOSED COMPACTED BUILDING PAD SUBGRADE SOIL. TYPICAL AT ALL WALL SECTIONS

A4 WALL SECTION
SCALE: 3/4" = 1'-0" (AE301A)

GRAPHIC SCALE(S)
3/4" = 1' - 0" 0 6" 1' 2' 3' 4' 5'

SYM	DESCRIPTION	DATE	APPR

SEAL

A/E INFO
APPROVED
FOR COMMANDER NAVFAC
ACTIVITY: Approved by LCDR VINCE DEL GRECO, ROICC with PWD YORKTOWN, via Email.
SATISFACTORY TO DATE 03/26/2026
DES GJR DRW GJR CHK JEL
PM/DM MME/WJW
BRANCH MANAGER DJD
CHIEF ENG/ARCH JWJ
FIRE PROTECTION HPN

DEPARTMENT OF THE NAVY
NAVAL FACILITIES ENGINEERING SYSTEMS COMMAND
MIDLANT PDC CORE
NAVAL FACILITIES ENGINEERING SYSTEMS COMMAND - MID-ATLANTIC
NAVAL STATION - NORFOLK, VA
NAVAL WEAPONS STATION YORKTOWN, VIRGINIA
P171 WEAPON MAGAZINES SEGREGATION FACILITIES
WALL SECTIONS

SCALE: AS NOTED
EPROJECT NO.: 1737010
CONSTR. CONTR. NO.
NAVFAC DRAWING NO. 12942069
SHEET 401 OF 499
AE402A
DRAWFORM REVISION: 25 AUGUST 2020

4/1/2026 2:22:19 PM AE402A
C:\Revit Local Files\P171-1737010-A-R21-SEG_gareth.ratti.rvt

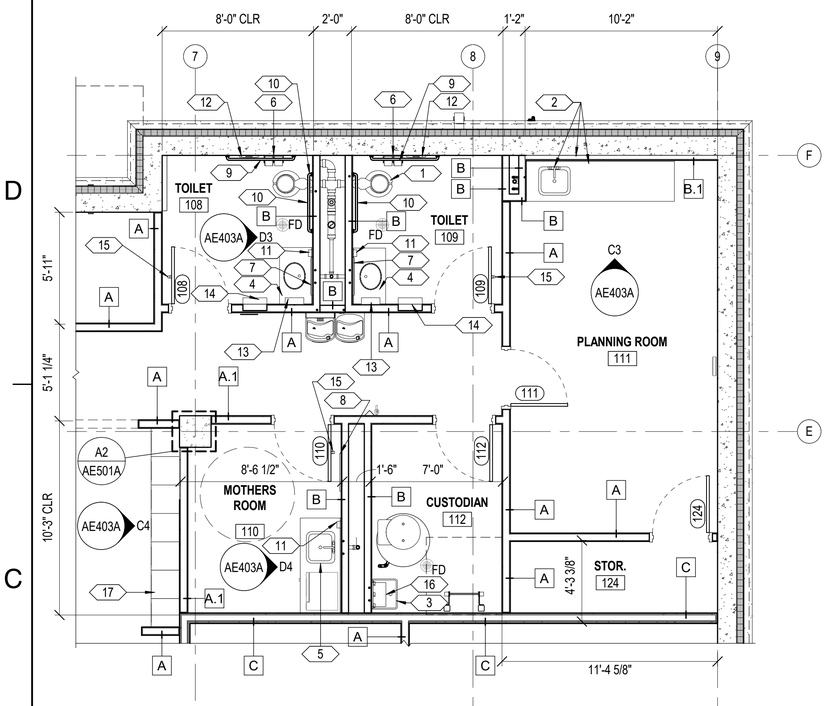

C1 ENLARGED FLOOR PLAN

SCALE: 1/4" = 1'-0" (AE101A)

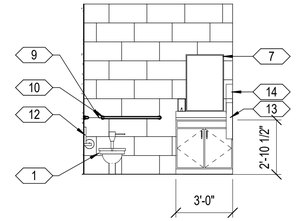

D3 INTERIOR ELEVATION TOILET 108 (TOILET 109 OPP. HAND)

SCALE: 1/4" = 1'-0" (AE403A)

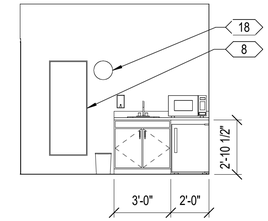

D4 INTERIOR ELEVATION MOTHERS ROOM 110

SCALE: 1/4" = 1'-0" (AE403A)

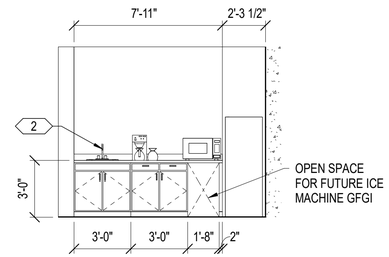

C3 INTERIOR ELEVATION PLANNING ROOM 111

SCALE: 1/4" = 1'-0" (AE403A)

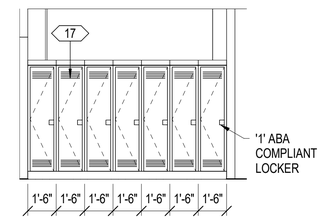

C4 INTERIOR ELEVATION LOCKERS

SCALE: 1/4" = 1'-0" (AE403A)

MARK	DESCRIPTION	MOUNTING HEIGHT	SHEET NOTE
1	WATER CLOSET		
2	SOLID SURFACE COUNTERTOP WITH BACKSPLASH AND STAINLESS STEEL SINGLE BOWL KITCHEN SINK		
3	MOP SINK, SEE PLUMBING		
4	SOLID SURFACE COUNTERTOP WITH BACKSPLASH, END SPLASHES AND INTEGRAL BOWLS		
5	SOLID SURFACE COUNTERTOP WITH BACKSPLASH AND STAINLESS STEEL BAR SINK		
6	TOILET TISSUE HOLDER - DOUBLE	30" AFF TO TOP OF UNIT	
7	STAINLESS STEEL MIRROR	46" AFF TO BOTTOM EDGE	3
8	STAINLESS STEEL MIRROR	12" AFF TO BOTTOM EDGE	3
9	42" GRAB BAR (HORIZONTAL)	36" AFF TO TOP OF GRIPPING SURFACE	2
10	36" GRAB BAR (HORIZONTAL)	36" AFF TO TOP OF GRIPPING SURFACE	2
11	SURFACE MOUNTED SOAP DISPENER	8" ABOVE COUNTERTOP TO BOTTOM OF UNIT	
12	SURFACE MOUNTED SANITARY NAPKIN DISPOSAL	30" AFF TO TOP OF UNIT	
13	PAPER TOWEL DISPENSER	48" AFF MAX. TO DISPENSER OPENING	4
14	WASTE RECEPTACLE	48" AFF MAX. TO DISPENSER OPENING	4
15	COAT HOOK	40" AFF TO CL	
16	MOP RACK	Satin Finish	
17	LOCKERS		
18	WALL CLOCK		

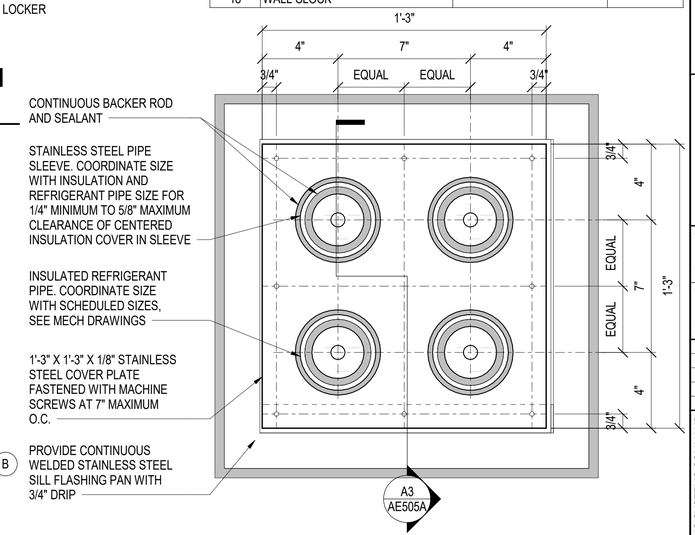

B5 REFRIGERANT PIPE PENETRATION ASSEMBLY

SCALE: 3" = 1'-0"

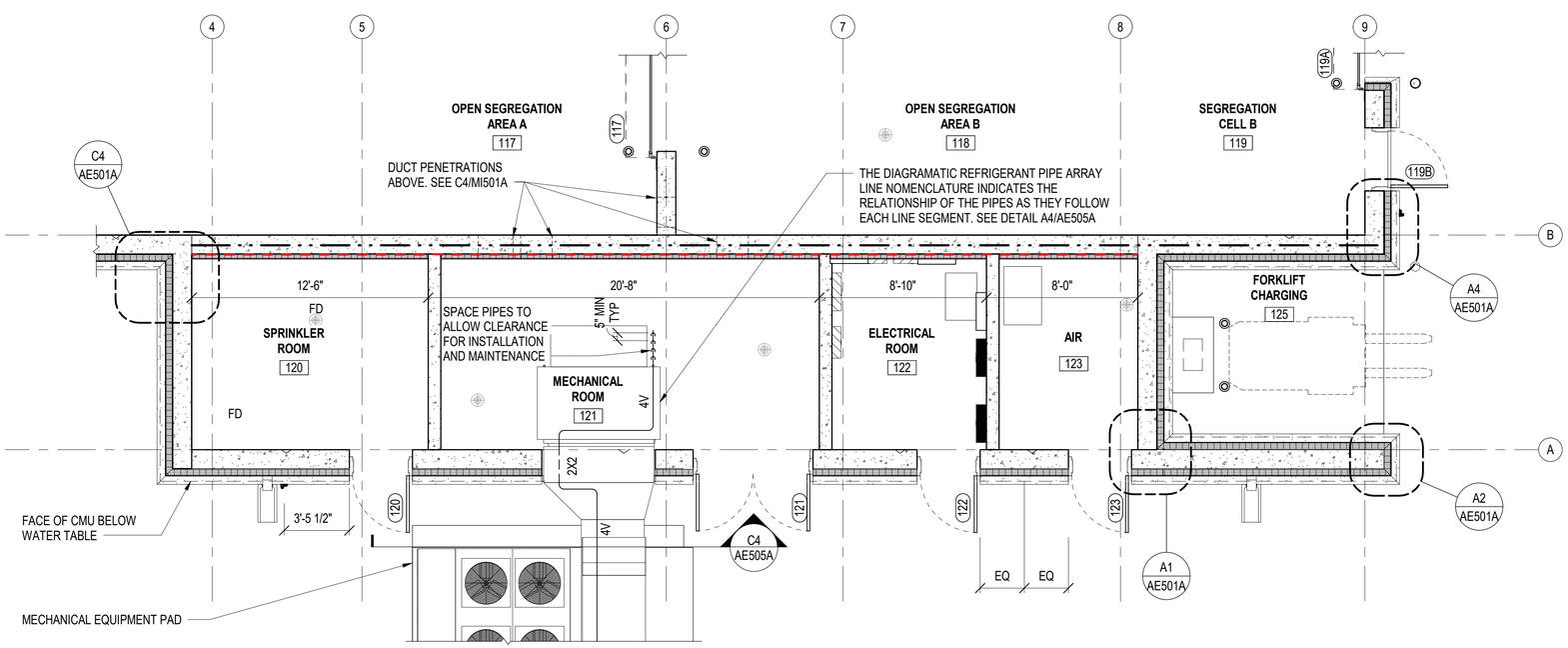

A3 ENLARGED FLOOR PLAN - UTILITY SPACES

SCALE: 1/4" = 1'-0" (AE101A)

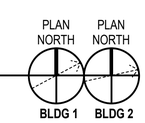

SHEET NOTES

A. ALL INTERIOR GYPSUM WALL BOARD PARTITIONS WILL BE PARTION TYPE 'A' U.O.N. SEE AE510A FOR PARTITION TYPES AND DETAILS

B. GRAB BARS SHALL BE 1 1/2" OUTSIDE DIAMETER PEENED GRIPPING SURFACE STAINLESS STEEL WITH CONCEALED FASTENERS

C. CENTER EACH MIRROR OVER SINK

D. PAPER TOWEL, SOAP, AND TOILET PAPER DISPENSERS WILL BE GFGI.

GRAPHIC SCALE(S)

3" = 1' - 0" 0 3" 6" 1'

1/4" = 1' - 0" 0 1' 5' 10' 15'

SYM	DESCRIPTION	DATE	APPR

NAVFAC

SEAL

A/E INFO

APPROVED

FOR COMMANDER NAVFAC

ACTIVITY: Approved by LCDR VINCE DEL GRECO, ROICC with PWD YORKTOWN, via Email.

SATISFACTORY TO DATE 03/26/2026

DES GJR | DRW GJR | CHK JEL

PM/DM MME/WJW

BRANCH MANAGER DJD

CHIEF ENG/ARCH JWJ

FIRE PROTECTION HPN

DEPARTMENT OF THE NAVY
NAVAL FACILITIES ENGINEERING SYSTEMS COMMAND
MIDLANT PDC CORE

NAVAL FACILITIES ENGINEERING SYSTEMS COMMAND - MID-ATLANTIC
NAVAL STATION - NORFOLK, VA

NAVAL WEAPONS STATION
YORKTOWN, VIRGINIA

P171 WEAPON MAGAZINES
SEGREGATION FACILITIES

ENLARGED PLANS, TOILET PLANS AND ACCESSORIES

SCALE: AS NOTED

EPROJECT NO.: 1737010

CONSTR. CONTR. NO.

NAVFAC DRAWING NO. 12942070

SHEET 402 OF 499

AE403A

DRAWFORM REVISION: 25 AUGUST 2020

4/1/2026 2:22:21 PM AE403A
C:\Revit Local Files\P171-1737010-A-R21-SEG_gareth.ratti.rvt

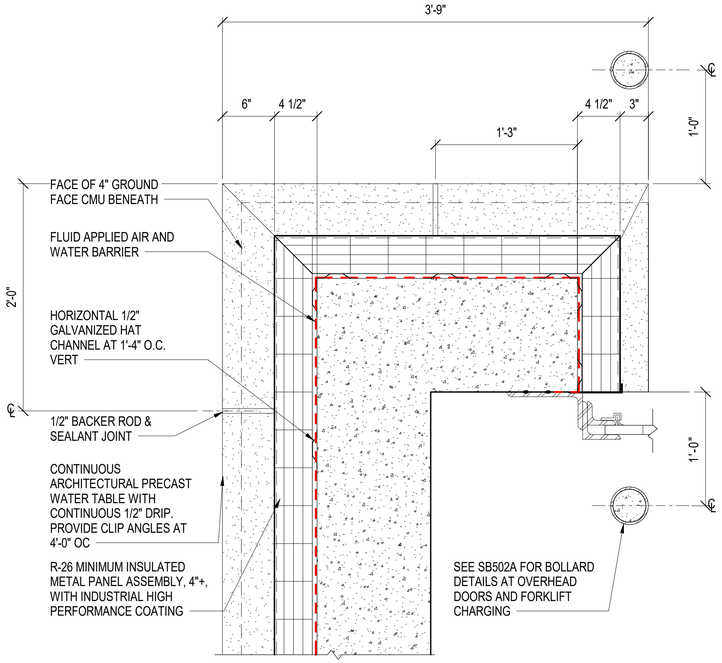

C1 CORNER DETAIL - OVERHEAD DOOR JAMB AT 4'-0" AFF

SCALE: 1 1/2" = 1'-0" (AE101A)

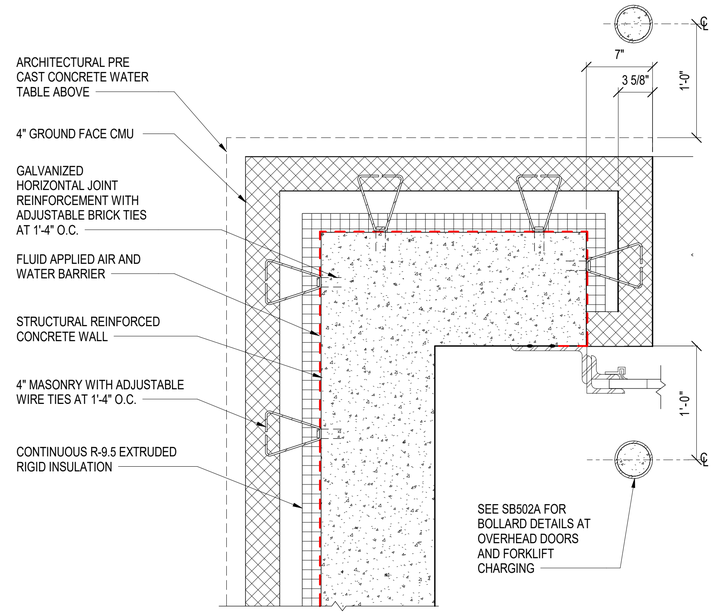

C2 CORNER DETAIL - OVERHEAD DOOR JAMB AT 1-0" AFF

SCALE: 1 1/2" = 1'-0" (AE101A)

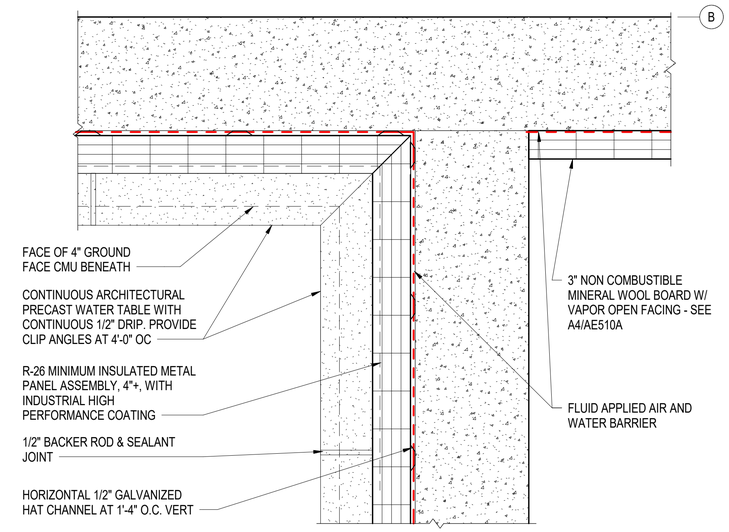

C4 PLAN DETAIL

SCALE: 1 1/2" = 1'-0" (AE403A)

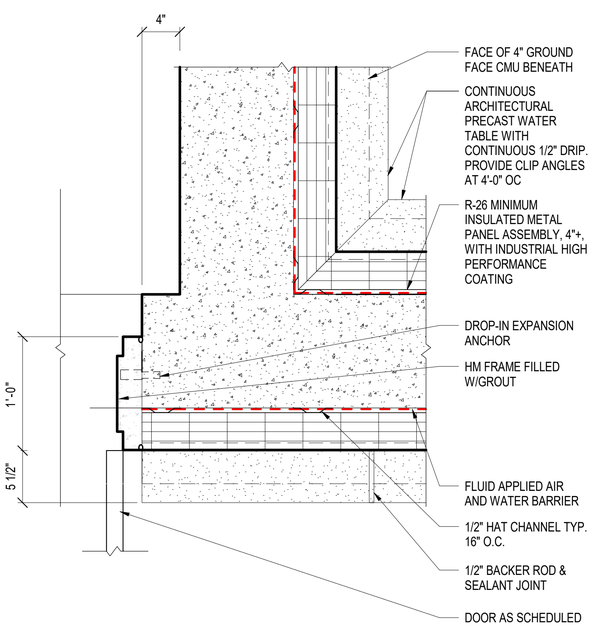

A1 PLAN DETAIL

SCALE: 1 1/2" = 1'-0" (AE403A)

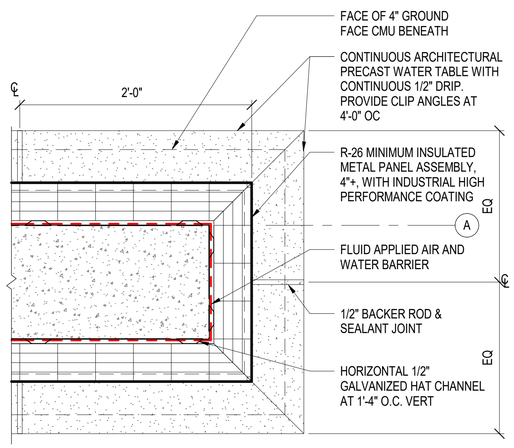

A2 PLAN DETAIL

SCALE: 1 1/2" = 1'-0" (AE403A)

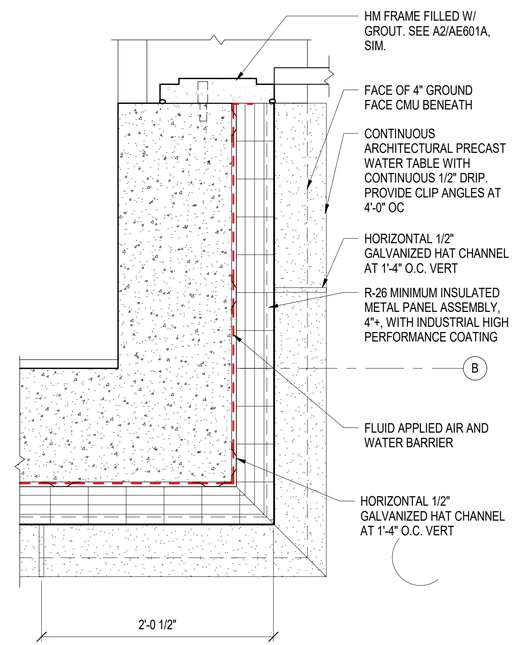

A4 PLAN DETAIL - PERSONNEL DOOR JAMB

SCALE: 1 1/2" = 1'-0" (AE403A)

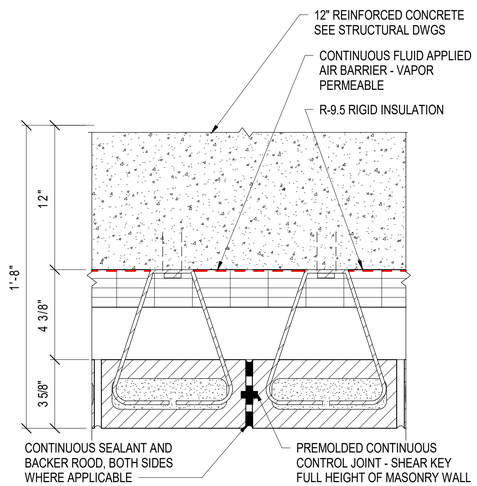

A5 MASONRY CONTROL JOINT (CJ) DETAIL

SCALE: 3" = 1'-0"

GRAPHIC SCALE(S)

3" = 1' - 0" 0 3" 6" 1'

1 1/2" = 1' - 0" 0 3" 6" 9" 1' 2'

SYM	DESCRIPTION	DATE	APPR

SEAL

A/E INFO

APPROVED

FOR COMMANDER NAVFAC

ACTIVITY: Approved by LCDR VINCE DEL GRECO, ROICC with PWD YORKTOWN, via Email.

SATISFACTORY TO DATE 03/26/2026

DES GJR | DRW GJR | CHK JEL

PM/DM MME/WJW

BRANCH MANAGER DJD

CHIEF ENG/ARCH JWJ

FIRE PROTECTION HPN

DEPARTMENT OF THE NAVY
NAVAL FACILITIES ENGINEERING SYSTEMS COMMAND
MIDLANT PDC CORE

NAVAL FACILITIES ENGINEERING SYSTEMS COMMAND - MID-ATLANTIC
NAVAL STATION - NORFOLK, VA

NAVAL WEAPONS STATION
YORKTOWN, VIRGINIA

P171 WEAPON MAGAZINES
SEGREGATION FACILITIES

EXTERIOR DETAILS

SCALE: AS NOTED

EPROJECT NO.: 1737010

CONSTR. CONTR. NO.

NAVFAC DRAWING NO. 12942071

SHEET 403 OF 499

AE501A

DRAWFORM REVISION: 25 AUGUST 2020

4/1/2026 2:22:23 PM AE501A
C:\Revit Local Files\P171-1737010-A-R21-SEG_gareth.ratti.rvt

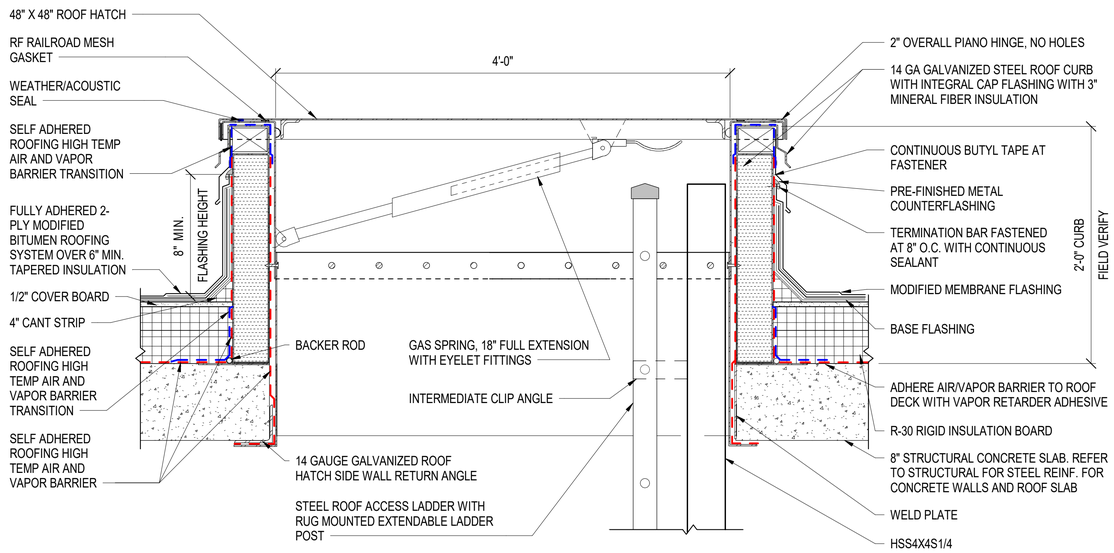

C1 ROOF HATCH DETAIL

SCALE: 1 1/2" = 1'-0"

FOR ADDITIONAL INFORMATION SEE A4/SF402A

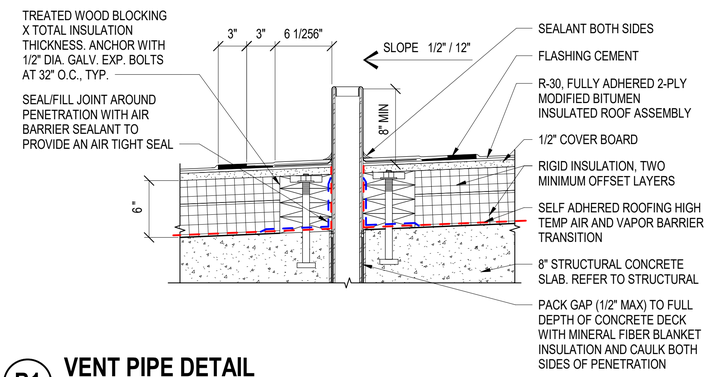

B1 VENT PIPE DETAIL

SCALE: 1 1/2" = 1'-0"

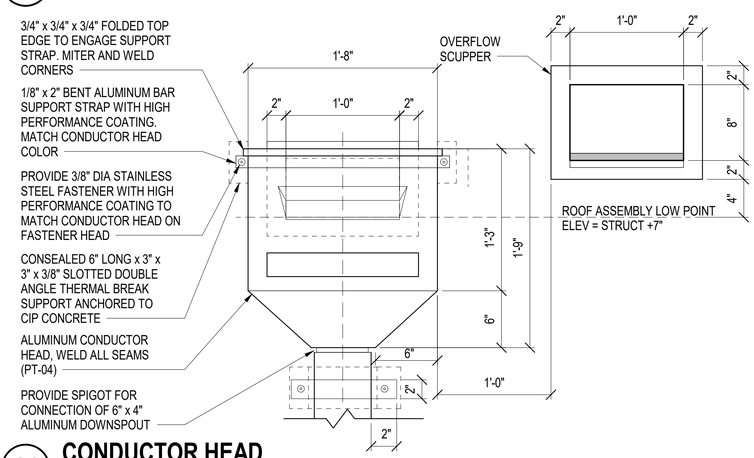

A1 CONDUCTOR HEAD

SCALE: 1 1/2" = 1'-0"

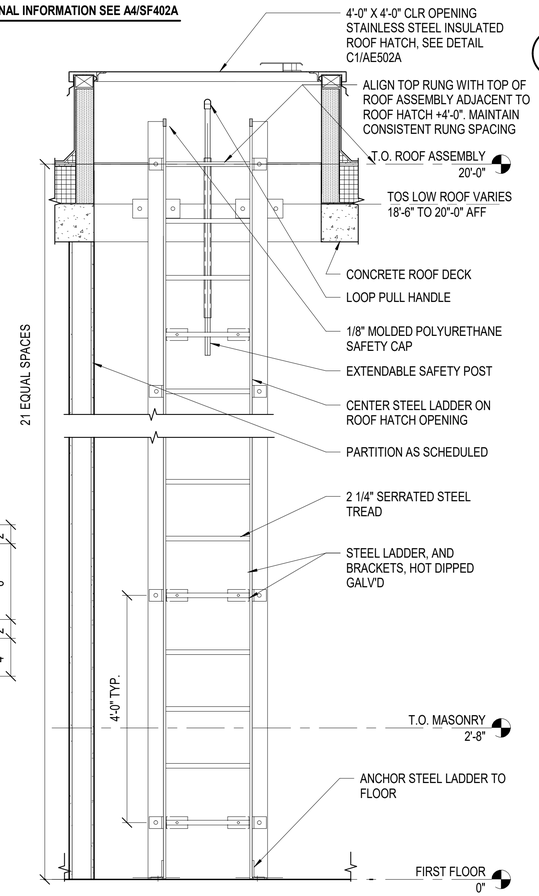

A3 ACCESS LADDER ELEVATION

SCALE: 3/4" = 1'-0"

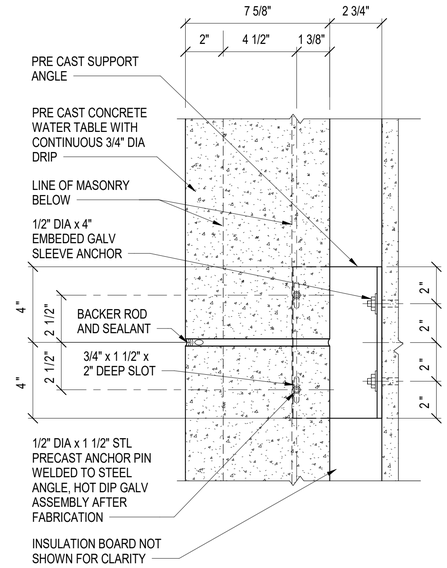

C4 PRECAST SUPPORT ANCHOR

SCALE: 3" = 1'-0" (AE502A)

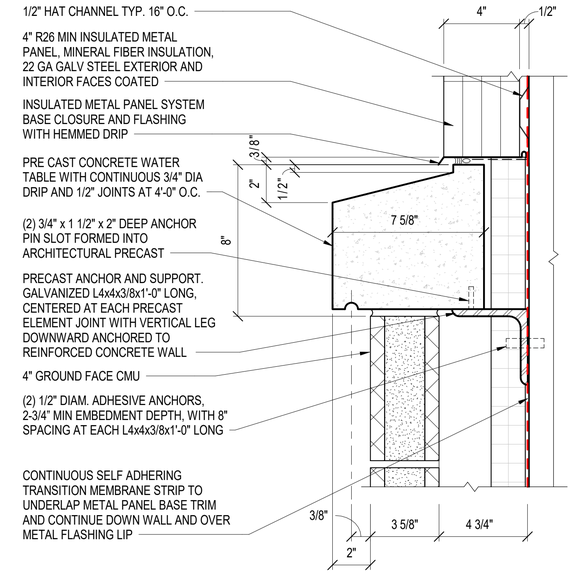

C5 ARCHITECTURAL PRECAST BAND SECTION

SCALE: 3" = 1'-0" (AE502A)

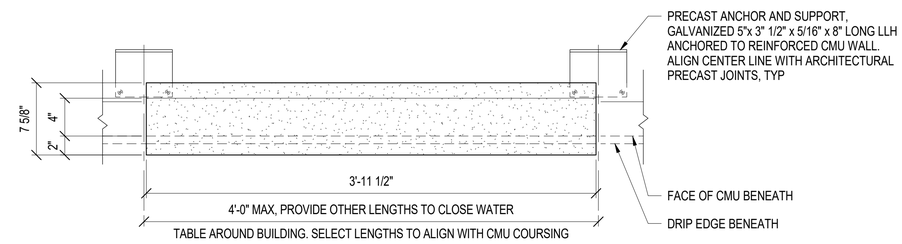

B4 PRECAST PANEL PLAN DETAIL

SCALE: 1 1/2" = 1'-0"

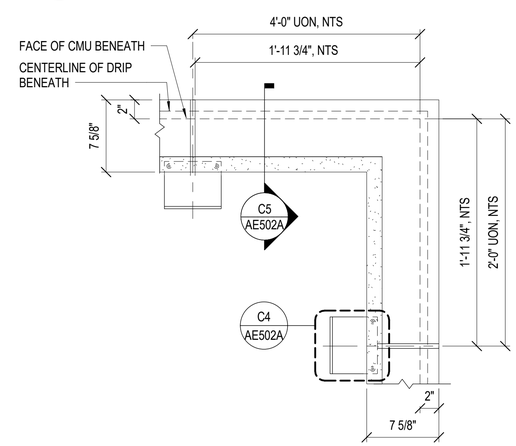

NOTE - PRE CAST CONCRETE WATER TABLE ONLY SHOWN FOR CLARITY SEE B4/A-501A FOR TO SCALE PRECAST PANEL LENGTH, TYP.

A4 PRECAST CORNER PLAN DETAIL

SCALE: 1 1/2" = 1'-0"

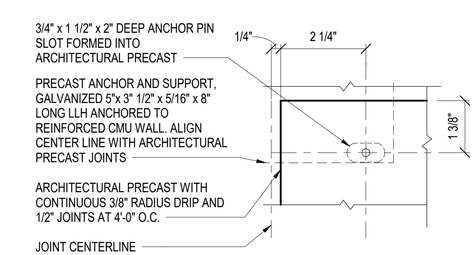

A5 PRECAST CORNER DETAIL

SCALE: 6" = 1'-0"

GRAPHIC SCALE(S)

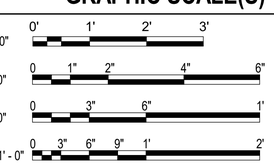

SYM	DESCRIPTION	DATE	APPR

SEAL

A/E INFO

APPROVED

FOR COMMANDER NAVFAC

ACTIVITY: Approved by LCDR VINCE DEL GRECO, RO/CC with PWD YORKTOWN, via Email.

SATISFACTORY TO DATE 03/26/2026

DES GJR | DRW GJR | CHK JEL

PM/DM MME/WJW

BRANCH MANAGER DJD

CHIEF ENG/ARCH JWJ

FIRE PROTECTION HPN

DEPARTMENT OF THE NAVY
NAVAL FACILITIES ENGINEERING SYSTEMS COMMAND
MID-ANT PDC CORE

NAVAL FACILITIES ENGINEERING SYSTEMS COMMAND - MID-ATLANTIC
NAVAL STATION - NORFOLK, VA

NAVAL WEAPONS STATION
YORKTOWN, VIRGINIA

P171 WEAPON MAGAZINES
SEGREGATION FACILITIES

EXTERIOR DETAILS

SCALE: AS NOTED

EPROJECT NO.: 1737010

CONSTR. CONTR. NO.

NAVFAC DRAWING NO. 12942072

SHEET 404 OF 499

AE502A

DRAWFORM REVISION: 25 AUGUST 2020

4/1/2026 2:22:24 PM AE502A
C:\Revit Local Files\P171-1737010-A-R21-SEG_gareth.ratti.rvt

GRAPHIC SCALE(S)

1 1/2" = 1' - 0" 0 3" 6" 9" 1' 2'

3/4" = 1' - 0" 0 6" 1' 2' 3' 4' 5'

3" = 1' - 0" 0 3" 6" 1'

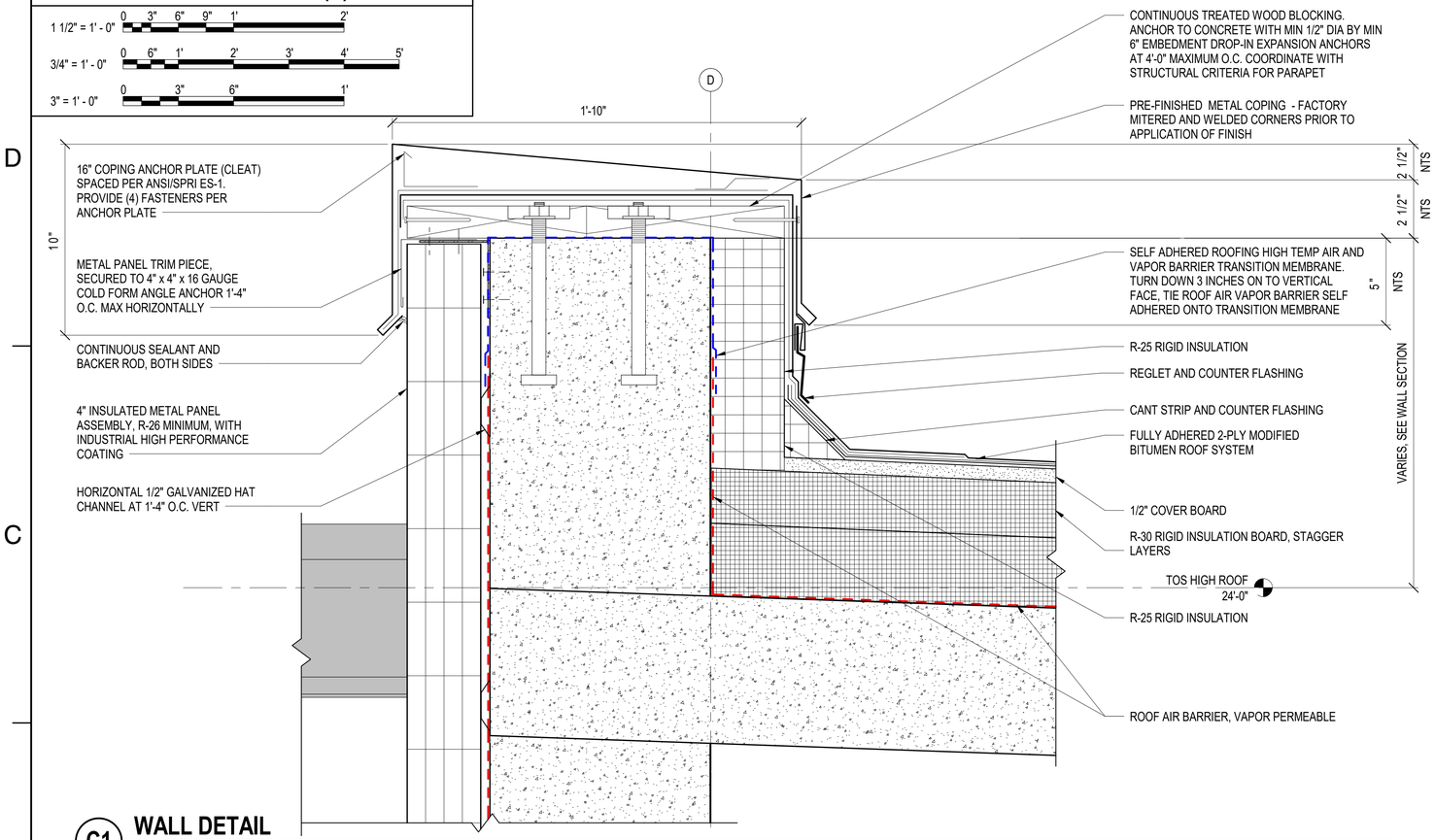

C1 WALL DETAIL

SCALE: 3" = 1'-0" (AE401A)

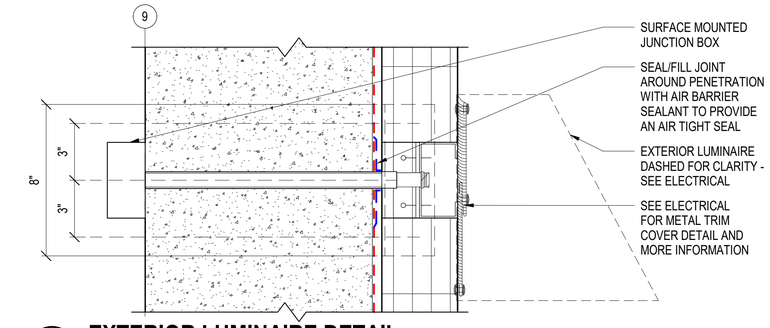

D4 EXTERIOR LUMINAIRE DETAIL

SCALE: 3" = 1'-0" (AE402A)

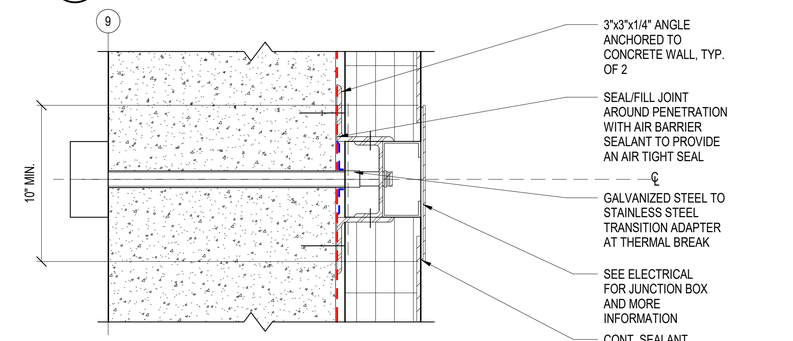

C4 EXTERIOR LUMINAIRE PLAN DETAIL

SCALE: 3" = 1'-0" (AE402A)

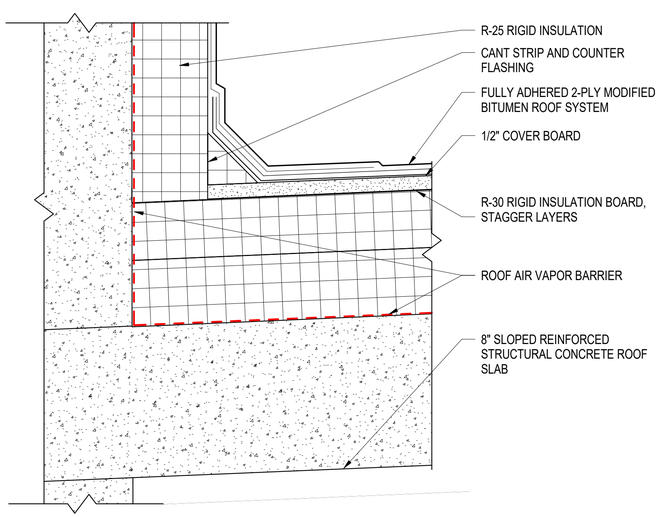

A1 WALL DETAIL

SCALE: 3" = 1'-0" (AE401A)

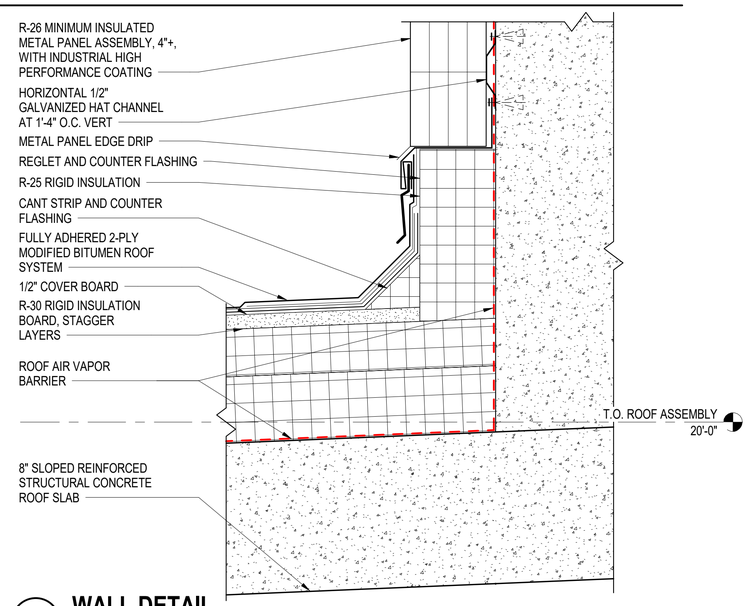

A3 WALL DETAIL

SCALE: 3" = 1'-0" (AE401A)

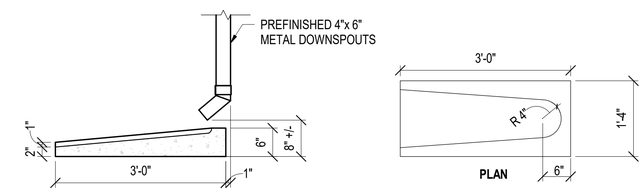

B4 PRE CAST CONCRETE SPLASH BLOCK WITH DOWNSPOUT DETAIL (UON)

SCALE: 3/4" = 1'-0"

PROVIDE SCREEN PRINTED WHITE NUMBERS PROVIDE TEXT HEIGHT INDICATED IN SCHEDULE PROVIDE RONT: HELVETICA NEUE 55 ROMAN CENTER COPY VERTICALLY AND HORIZONTALLY

BLUE BACKGROUND - PANTONE 19-4052 TPX

ALUMINUM SIGN, 0.125" THICK, DIAMOND GRADE REFLECTIVE (DG) THAT MEETS ASTM D4956

PROVIDE 3/8" X MIN 2" EMBEDMENT, COUNTER SUNK HEAD, STAINLESS STEEL ANCHORS. FASTENER HEAD MUST BE FLUSH WITH SIGN FACE

PREP HOLES FOR COUNTER SUNK ANCHOR HEADS PRIOR TO APPLYING SCREENED BUILDING NUMBER

BUILDING SIGN NOTE: COORDINATE WITH THE CONTRACTING OFFICER TO ACQUIRE THE CORRECT UNIQUE NUMBER FOR EACH STRUCTURE PRIOR TO REQUESTING SHOP DRAWINGS

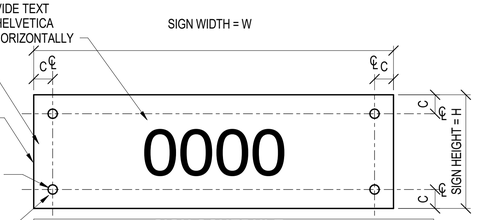

SIGN SCHEDULE

STRUCTURE TYPE	SIGN SIZE W X H	TEXT HEIGHT	FASTENER CENTER OFFSET, C
FORKLIFT CHARGING STATION	3'2" X 1'-0"	6"	1"
LOADING RAMP	3'2" X 1'-0"	6"	1"
MAGAZINE	3'2" X 1'-0"	6"	1"
SEGREGATION FACILITY	4'-9" X 1'-6"	9"	2"

PROVIDE EACH STRUCTURE OR PORTION OF A STRUCTURE A BUILDING SIGN CONTAINING ITS UNIQUE IDENTIFICATION NUMBER, FOR EXAMPLE EACH MAGAZINE, SEGREGATION FACILITY, LOADING RAMP, AND FORKLIFT CHARGING STATION. PROVIDE SIGN WHERE INDICATED UNLESS DIRECTED OTHERWISE BY THE CONTRACTING OFFICER

A4 BUILDING AND MAGAZINE SIGN DETAIL

SCALE: 1 1/2" = 1'-0"

SYM	DESCRIPTION	DATE	APPR

SEAL

A/E INFO

APPROVED

FOR COMMANDER NAVFAC

ACTIVITY
Approved by LCDR VINCE DEL GRECO, ROICC with PWD YORKTOWN, via Email.

SATISFACTORY TO DATE 03/26/2026

DES GJR DRW GJR CHK JEL

PM/DM MME/WJW

BRANCH MANAGER DJD

CHIEF ENG/ARCH JWJ

FIRE PROTECTION HPN

DEPARTMENT OF THE NAVY
NAVAL FACILITIES ENGINEERING SYSTEMS COMMAND
MID-ANT POC CORE

NAVAL FACILITIES ENGINEERING SYSTEMS COMMAND - MID-ATLANTIC
NAVAL STATION - NORFOLK, VA

NAVAL WEAPONS STATION
YORKTOWN, VIRGINIA

P171 WEAPON MAGAZINES
SEGREGATION FACILITIES

EXTERIOR DETAILS

SCALE: AS NOTED

EPROJECT NO.: 1737010

CONSTR. CONTR. NO.

NAVFAC DRAWING NO. 12942073

SHEET 405 OF 499

AE503A

DRAWFORM REVISION: 25 AUGUST 2020

4/1/2026 2:22:26 PM AE503A
C:\Revit Local Files\P171-1737010-A-R21-SEG_gareth.ratti.rvt

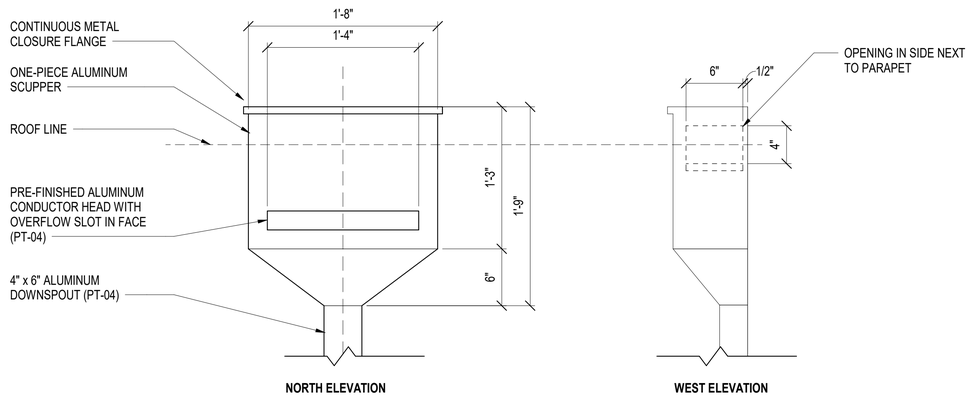

C1 CONDUCTOR HEAD AT ENTRY CANOPY

SCALE: 1 1/2" = 1'-0"

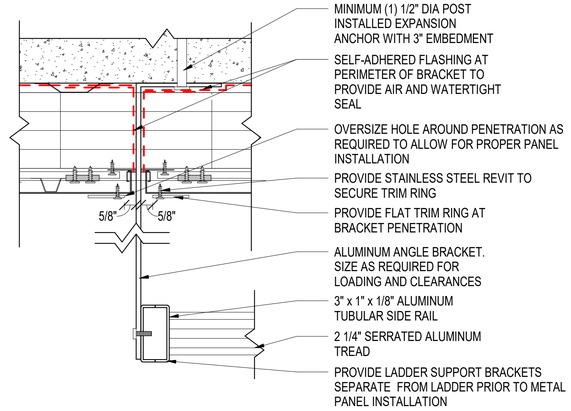

C3 EXTERIOR LADDER BRACKET DETAIL

SCALE: 3" = 1'-0"

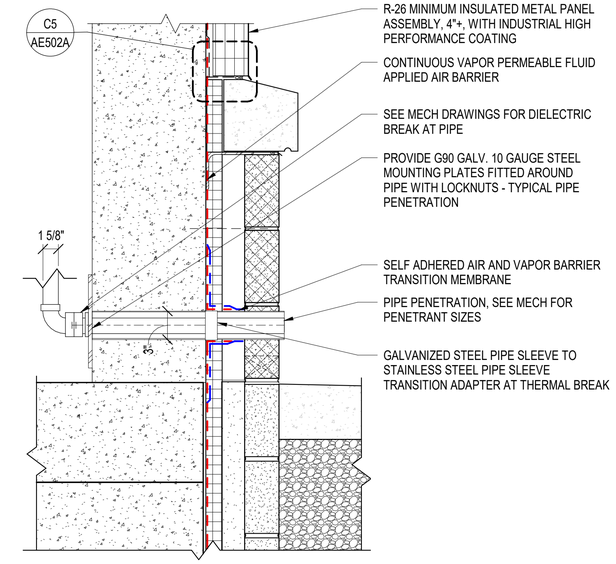

C5 PIPE PENETRATION DETAIL

SCALE: 1 1/2" = 1'-0"

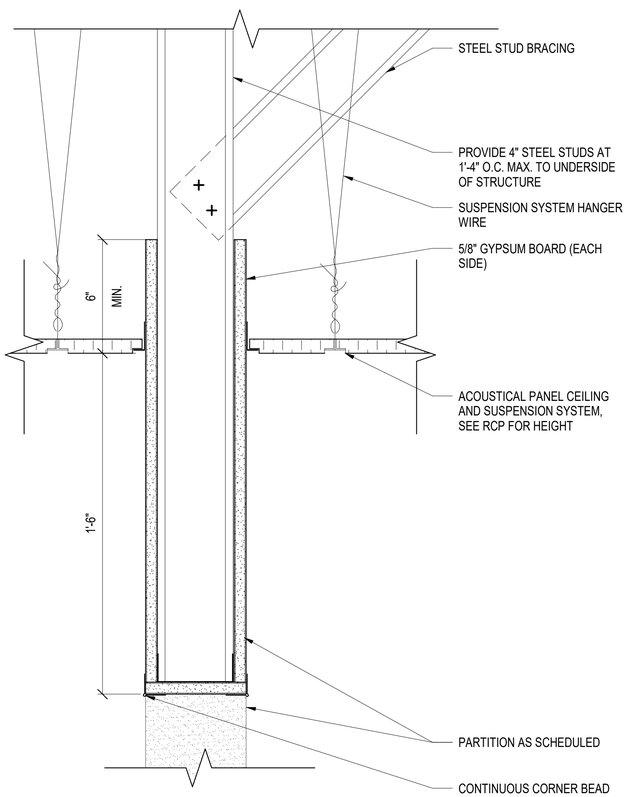

A1 CEILING DETAIL

SCALE: 3" = 1'-0" (AE102A)

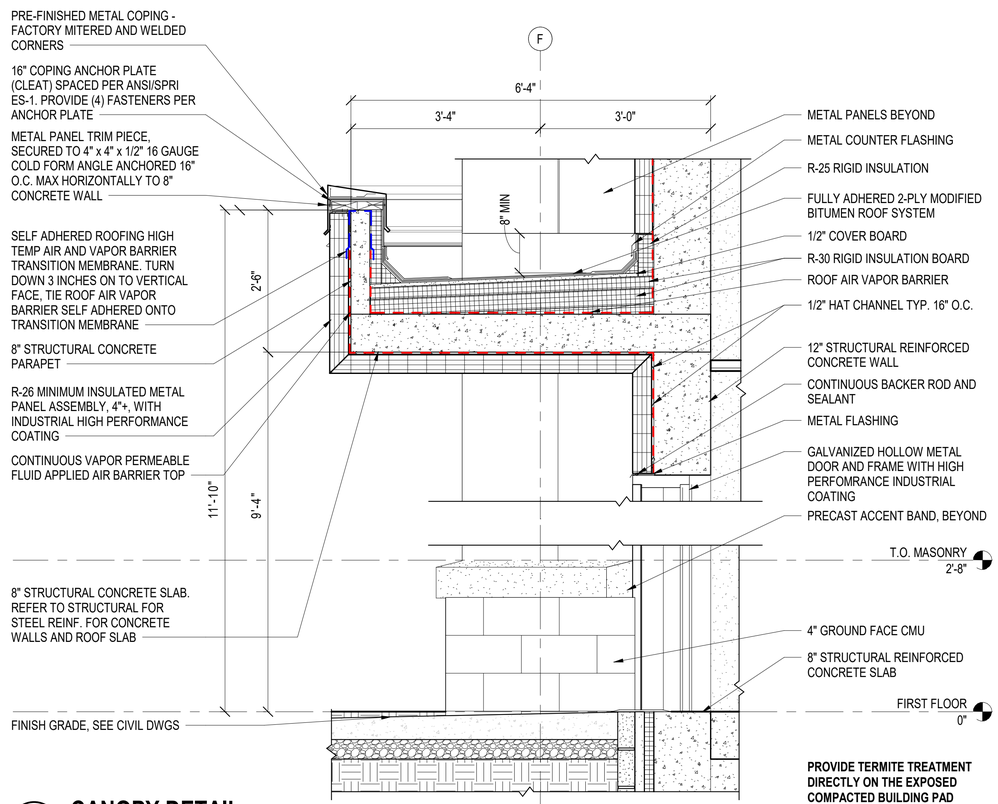

A3 CANOPY DETAIL

SCALE: 3/4" = 1'-0" (AE301A)

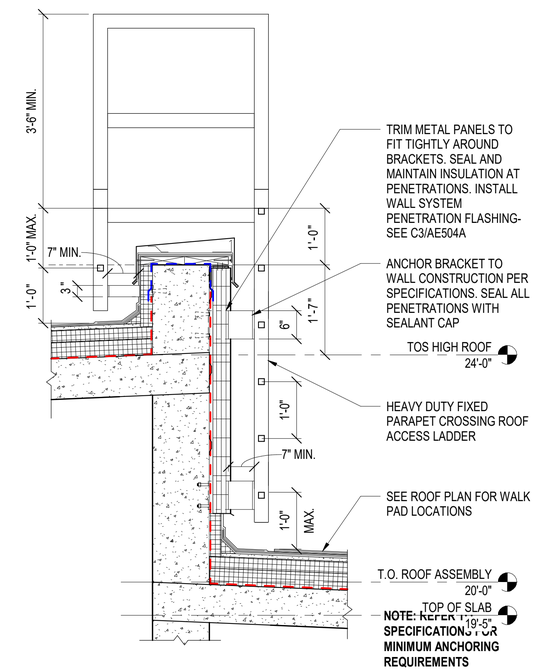

A5 PARAPET LADDER SECTION

SCALE: 3/4" = 1'-0" (AE102A)

GRAPHIC SCALE(S)

1 1/2" = 1' - 0" 0 3" 6" 9" 1' 2'

3" = 1' - 0" 0 3" 6" 1'

3/4" = 1' - 0" 0 6" 1' 2' 3' 4' 5'

SYM	DESCRIPTION	DATE	APPR

SEAL

A/E INFO

APPROVED

FOR COMMANDER NAVFAC

ACTIVITY
Approved by LCDR VINCE DEL GRECO, ROICC with PWD YORKTOWN, via Email.

SATISFACTORY TO DATE 03/26/2026

DES GJR | DRW GJR | CHK JEL

PM/DM MME/WJW

BRANCH MANAGER DJD

CHIEF ENG/ARCH JWJ

FIRE PROTECTION HPN

DEPARTMENT OF THE NAVY
NAVAL FACILITIES ENGINEERING SYSTEMS COMMAND
MIDLANT POC CORE

NAVAL FACILITIES ENGINEERING SYSTEMS COMMAND - MID-ATLANTIC
NAVAL STATION - NORFOLK, VA

NAVAL WEAPONS STATION YORKTOWN, VIRGINIA

P171 WEAPON MAGAZINES SEGREGATION FACILITIES

CEILING DETAILS AND MISC. DETAILS

SCALE: AS NOTED

EPROJECT NO.: 1737010

CONSTR. CONTR. NO.

NAVFAC DRAWING NO. 12942074

SHEET 406 OF 499

AE504A

DRAWFORM REVISION: 25 AUGUST 2020

4/8/2026 8:33:35 AM AE504A
C:\Revit Local Files\P171-1737010-A-R21-SEG_gareth.rafti.rvt

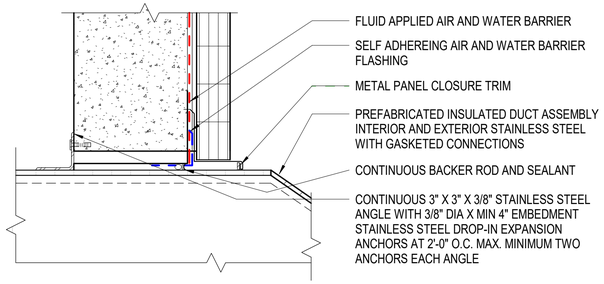

D2 MECH DUCT TRANSITION - HEAD, MTL PNL

SCALE: 1 1/2" = 1'-0" (AE505A)

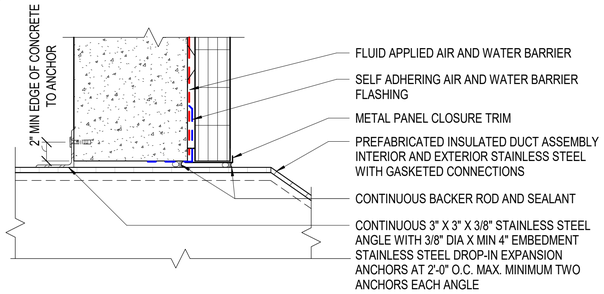

C2 MECH DUCT TRANSITION - JAMB, MTL PNL

SCALE: 1 1/2" = 1'-0" (AE505A)

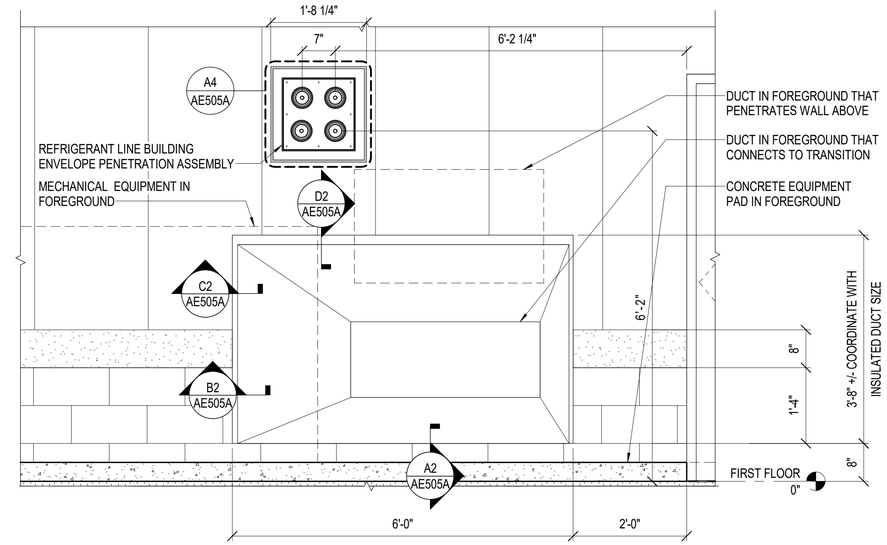

C4 DUCT TRANSITION ELEVATION

SCALE: 3/4" = 1'-0" (AE403A)

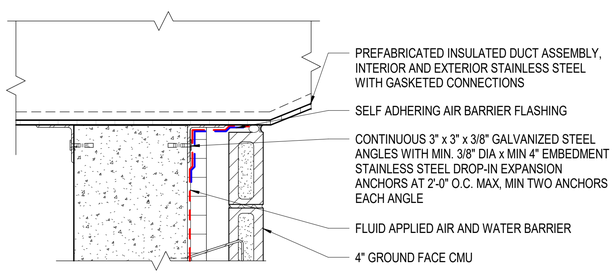

B2 MECH DUCT TRANSITION - JAMB, CMU

SCALE: 1 1/2" = 1'-0" (AE505A)

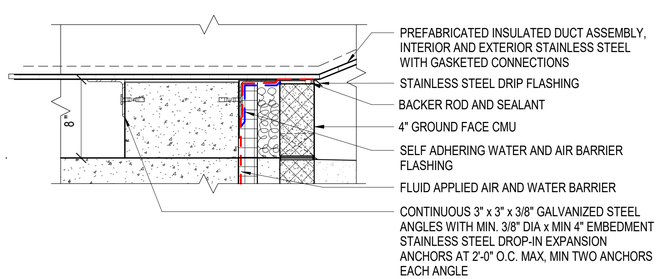

A2 MECH DUCT TRANSITION - SILL, CMU

SCALE: 1 1/2" = 1'-0" (AE505A)

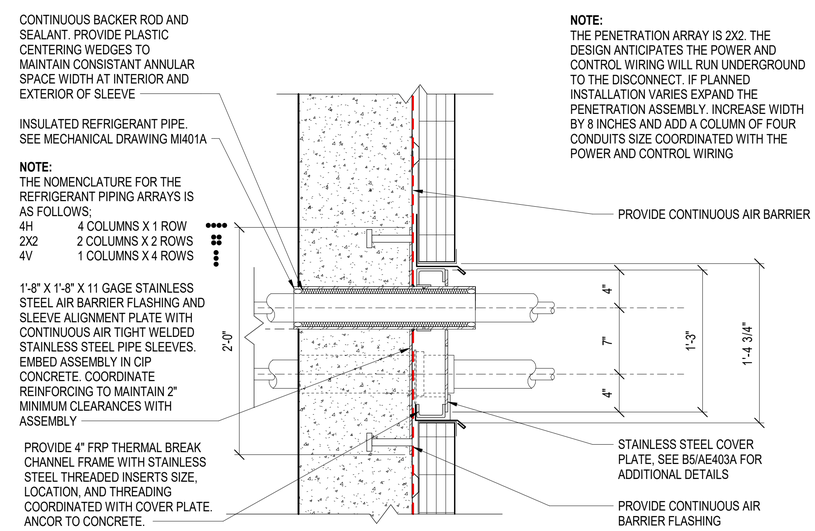

A4 REFRIGERANT PIPE PENETRATION ASSEMBLY - SECTION

SCALE: 1 1/2" = 1'-0" (AE505A)

GRAPHIC SCALE(S)

1 1/2" = 1' - 0" 0 3" 6" 9" 1' 2'

3/4" = 1' - 0" 0 6" 1' 2' 3' 4' 5'

SYM	DESCRIPTION	DATE	APPR

SEAL

A/E INFO

APPROVED

FOR COMMANDER NAVFAC

ACTIVITY: Approved by LCDR VINCE DEL GRECO, ROICC with PWD YORKTOWN, via Email.

SATISFACTORY TO DATE 03/26/2026

DES GJR DRW GJR CHK JEL

PM/DM MME/WJW

BRANCH MANAGER DJD

CHIEF ENG/ARCH JWJ

FIRE PROTECTION HPN

DEPARTMENT OF THE NAVY
NAVAL FACILITIES ENGINEERING SYSTEMS COMMAND
MID-ANT POC CORE

NAVAL FACILITIES ENGINEERING SYSTEMS COMMAND - MID-ATLANTIC
NAVAL STATION - NORFOLK, VA

NAVAL WEAPONS STATION YORKTOWN, VIRGINIA

P-171 WEAPON MAGAZINES SEGREGATION FACILITIES

MISC. DETAILS

SCALE: AS NOTED

EPROJECT NO.: 1737010

CONSTR. CONTR. NO.

NAVFAC DRAWING NO. 12942075

SHEET 407 OF 499

AE505A

DRAWFORM REVISION: 25 AUGUST 2020

4/1/2026 2:22:42 PM AE505A
C:\Revit Local Files\P171-1737010-A-R21-SEG_gareth.ratti.rvt

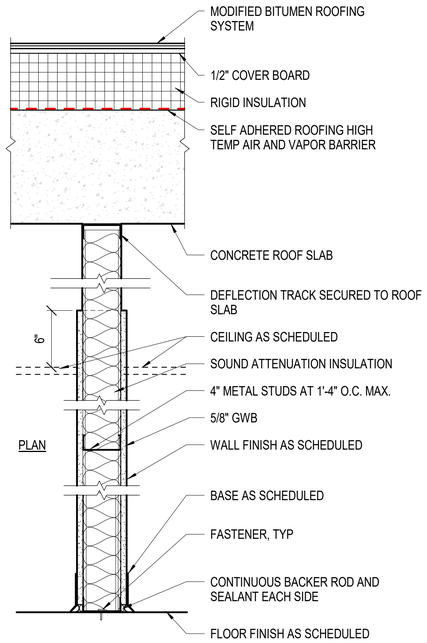

PARTITION TYPE A

SCALE: 1 1/2" = 1'-0"

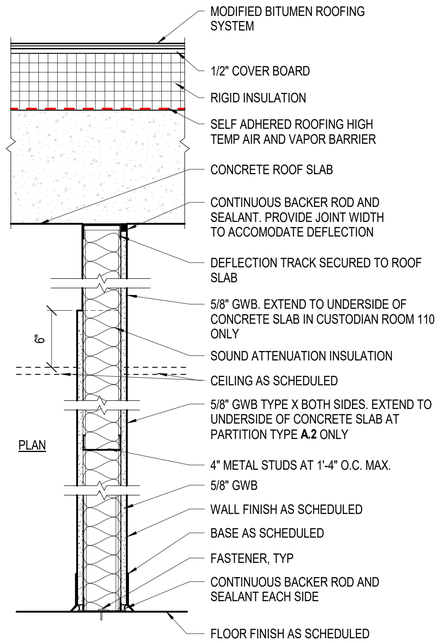

PARTITION TYPE A.1, A.2

SCALE: 1 1/2" = 1'-0"

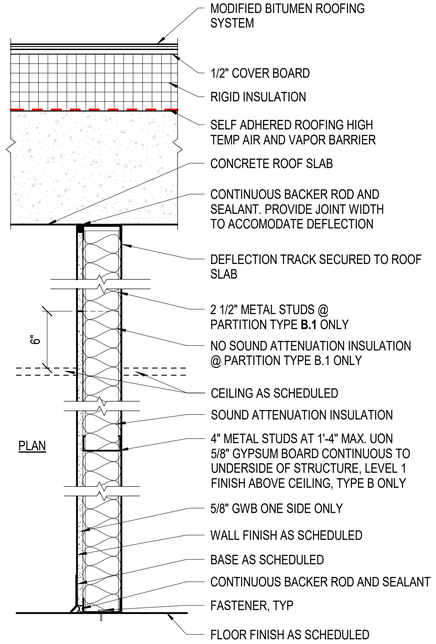

PARTITION TYPE B, B.1

SCALE: 1 1/2" = 1'-0"

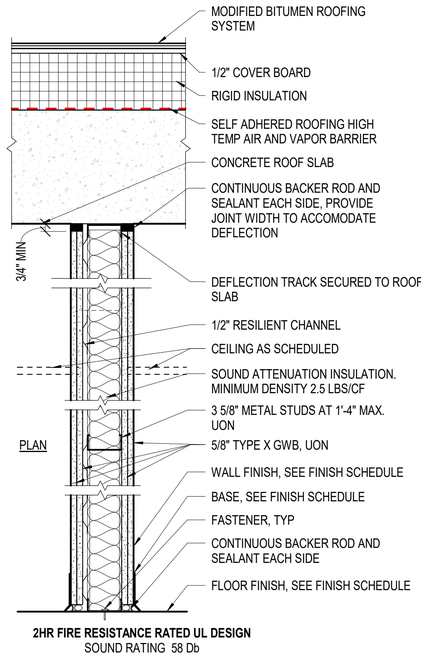

2HR FIRE RESISTANCE RATED UL DESIGN
SOUND RATING 58 Db

PARTITION TYPE C

SCALE: 1 1/2" = 1'-0"

SHEET NOTES

A. EXTEND PARTITIONS TO THE UNDERSIDE OF THE STRUCTURAL DECK ABOVE UNLESS OTHERWISE NOTED.

B. PROVIDE DEFELECTION TRACKS AT THE UNDERSIDE OF THE STRUCTURAL DECK ABOVE FOR COLD-FORMED METAL STUD PARTITIONS.

C. PROVIDE MOISTURE-RESISTANT GYPSUM BOARD IN WET OR HUMID AREAS. PROVIDE 1/2" CEMENT BACKER BOARD FOR TILE SUBSTRATE.

D. SEE THE FINISH SCHEDULE SHEET FOR CEILING, PARTITION, WALL, BASE, AND FLOOR FINISHES.

E. INSTALL PARTITIONS PLUMB, SQUARE, FLAT, PARALLEL, OR PERPENDICULAR TO BUILDING LINES UNLESS NOTED OTHERWISE.

F. PROVIDE CFMF PARTITION TRACKS OR STUDS AND CONTINUOUS DOUBLE BEAD OF ACOUSTIC SEALANT TO THE TRACK OR STUD FACE ANCHORED TO CONCRETE SLABS AND WALLS.

G. PROVIDE ACOUSTIC BATT INSULATED PARTITIONS WITH BACKER ROD AND SEALANT AROUND THE PERIMETER OF GYPSUM BOARD WALLS WHERE IT ABUTS CONCRETE STRUCTURE ABOVE AND FLOOR SLAB BELOW. SEAL PERIMETER OF PENETRATIONS THROUGH THE GYPSUM BOARD.

H. REFER TO NOTE J ON AE001A FOR WALL AND CEILING FRAMING DELEGATED DESIGN REQUIREMENTS.

GRAPHIC SCALE(S)

3/4" = 1' - 0" 0 6" 1' 2' 3' 4' 5'

1 1/2" = 1' - 0" 0 3" 6" 9" 1' 2'

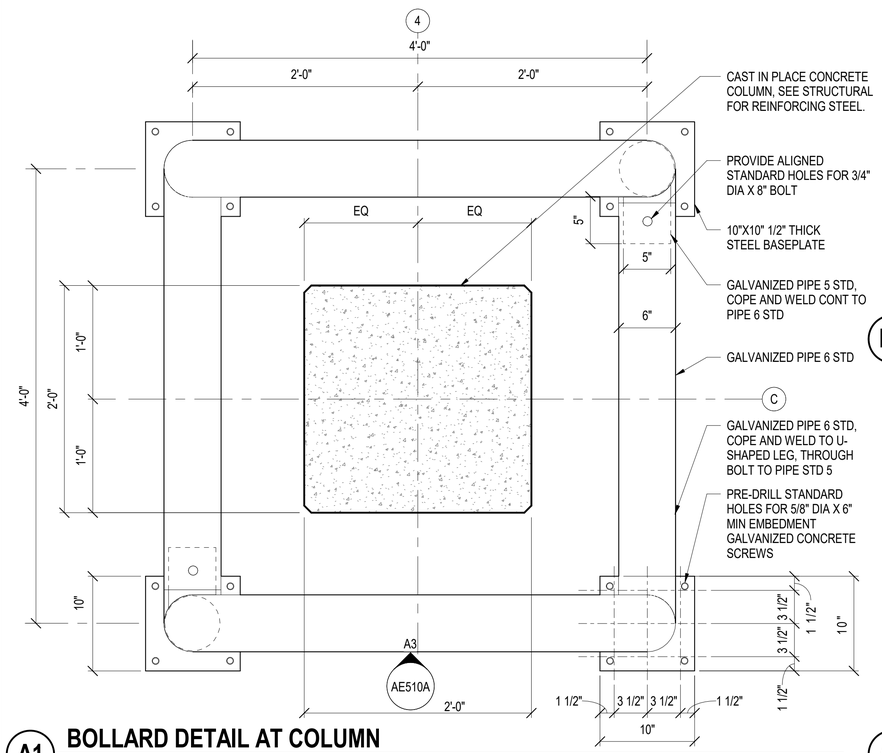

A1 BOLLARD DETAIL AT COLUMN

SCALE: 1 1/2" = 1'-0" (AE101A)

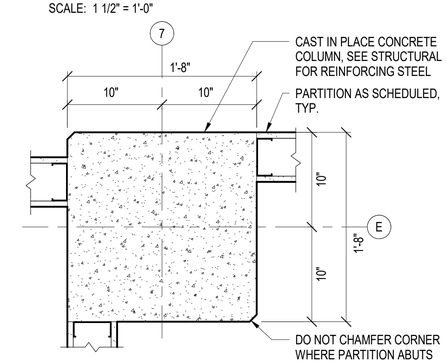

B4 COLUMN DETAIL

SCALE: 1 1/2" = 1'-0"

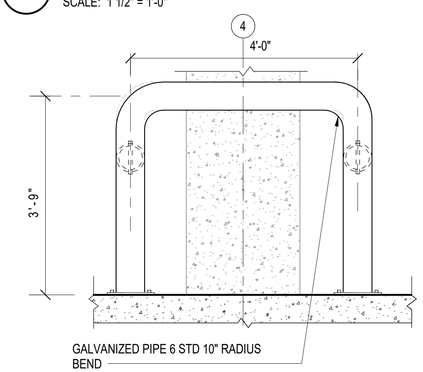

A3 BOLLARD ELEVATION AT COLUMN

SCALE: 3/4" = 1'-0" (AE510A)

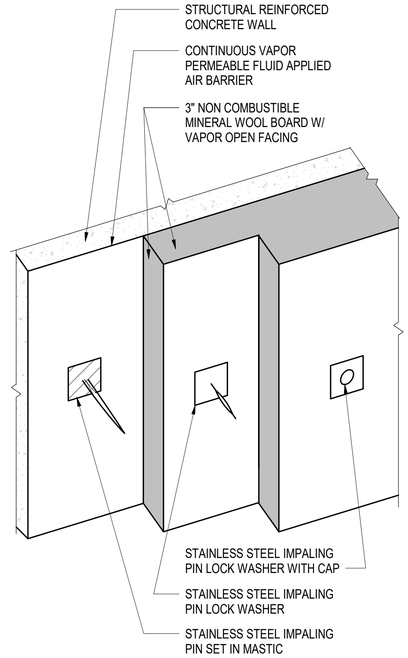

A4 INSULATION ASSEMBLY AT CONCRETE WALL

SCALE: NOT TO SCALE

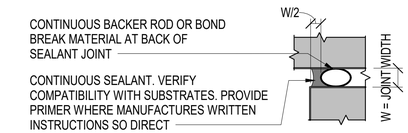

B5 SEALANT DETAIL, U.O.N.

SCALE: NOT TO SCALE (AE505A)

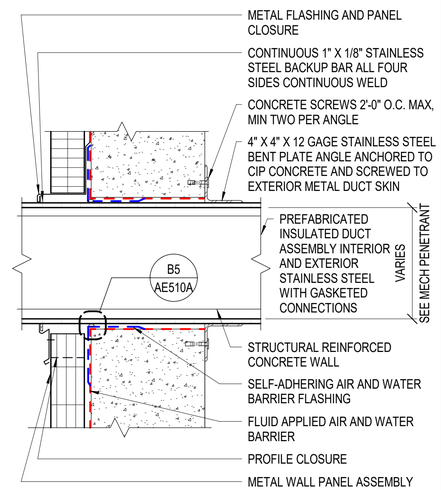

A5 BUILDING ENVELOPE DUCT PENETRATION

SCALE: 1 1/2" = 1'-0"

SYM	DESCRIPTION	DATE	APPR

SEAL

A/E INFO

APPROVED

FOR COMMANDER NAVFAC

ACTIVITY
Approved by LCDR VINCE DEL GRECO, ROICC with PWD YORKTOWN, via Email,

SATISFACTORY TO DATE 03/26/2026

DES GJR | DRW GJR | CHK JEL

PM/DM MME/WJW

BRANCH MANAGER DJD

CHIEF ENG/ARCH JWJ

FIRE PROTECTION HPN

DEPARTMENT OF THE NAVY
NAVAL FACILITIES ENGINEERING SYSTEMS COMMAND
MIDLANT POC CORE

NAVAL FACILITIES ENGINEERING SYSTEMS COMMAND - MID-ATLANTIC
NAVAL STATION - NORFOLK, VA

NAVAL WEAPONS STATION YORKTOWN, VIRGINIA
P171 WEAPON MAGAZINES
SEGREGATION FACILITIES

INTERIOR PARTITION TYPES, SCHEDULE AND MISC. DETAILS

SCALE: AS NOTED

EPROJECT NO.: 1737010

CONSTR. CONTR. NO.

NAVFAC DRAWING NO.
12942076

SHEET 408 OF 499

AE510A

DRAWFORM REVISION: 25 AUGUST 2020

AE510A
4/1/2026 2:22:43 PM
C:\Revit Local Files\P171-173701\0-A-R21-SEG_gareth.ratti.rvt

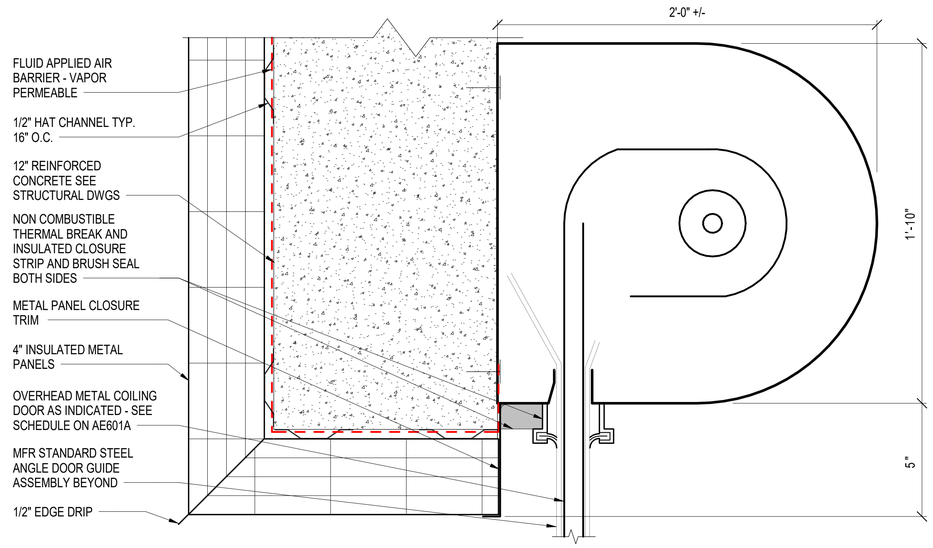

C1 OVERHEAD COILING DOOR HEAD

SCALE: 3" = 1'-0" (AE402A)

DOOR AND FRAME SCHEDULE

DOOR NO.	DOOR TYPE	DOOR SIZE WIDTH	DOOR SIZE HEIGHT	DOOR SIZE THICKNESS	DOOR MATERIAL	DOOR LOUVER LENGTH	DOOR LOUVER WIDTH	FRAME TYPE	FRAME MATERIAL	FRAME DETAILS HEAD	FRAME DETAILS JAMB	FRAME DETAILS SILL	FIRE RATING	HARDWARE SET NO.	REMARKS
FIRST FLOOR															
101A	D1	3'-0"	7'-0"	1 3/4"	HM			F1	HM	A3	A2		- -		4
101B	D1	3'-0"	7'-0"	1 3/4"	HM			F1	HM	B3	B4		- -		
102	D1	3'-0"	7'-0"	1 3/4"	HM			F1	HM	B3	B4		- -		
103	D1	3'-0"	7'-0"	1 3/4"	HM			F1	HM	B3	B4		45 MIN.		
104	D1	3'-0"	7'-0"	1 3/4"	HM			F1	HM	B3	B4		- -		
105	D3	6'-0"	7'-0"	1 3/4"	HM	1'-0"	1'-0"	F1	HM	B2	B2		- -		1,2
106	D3	3'-0"	7'-0"	1 3/4"	HM	1'-0"	1'-0"	F1	HM	B2	B2		- -		2
107A	D1	3'-0"	7'-0"	1 3/4"	HM			F1	HM	B3	B4		90 MIN.		
107B	D1	3'-0"	7'-0"	1 3/4"	HM			F1	HM	B3	B4		90 MIN.		
108	D1	3'-0"	7'-0"	1 3/4"	HM			F1	HM	B3	B4		- -		
109	D1	3'-0"	7'-0"	1 3/4"	HM			F1	HM	B3	B4		- -		
110	D3	3'-0"	7'-0"	1 3/4"	HM	1'-0"	1'-0"	F1	HM	B3	B4		- -		
111	D1	3'-0"	7'-0"	1 3/4"	HM			F1	HM	B3	B4		- -		
112	D1	3'-0"	7'-0"	1 3/4"	HM			F1	HM	B3	B4		- -		2
113	D3	3'-0"	7'-0"	1 3/4"	HM	1'-0"	1'-0"	F1	HM	B2	B2		- -		2
114	D3	6'-0"	7'-0"	1 3/4"	HM	1'-0"	1'-0"	F1	HM	B2	B2		- -		1,2
115A	D2	14'-0"	14'-0"	1"	SS			- -	STL	C1	B1	A1	- -		4
115B	D1	3'-0"	7'-0"	1 3/4"	HM			F1	HM	A3	A2		- -		4
115C	D2	14'-0"	14'-0"	1"	SS			- -	STL	C1	B1	A1	- -		4
116	D1	3'-0"	7'-0"	1 3/4"	HM			F1	HM	A3	A2		- -		4
117	D2	10'-0"	10'-0"	1"	SS			- -	STL	C1	B1	A1	- -		
118	D1	3'-0"	7'-0"	1 3/4"	HM			F1	HM	B2	B2		- -		
119A	D2	14'-0"	14'-0"	1"	SS			- -	STL	C1	B1	A1	- -		4
119B	D1	3'-0"	7'-0"	1 3/4"	HM			F1	HM	A3	A2		- -		4
120	D1	3'-0"	7'-0"	1 3/4"	HM			F1	HM	A3	A2		- -		4
121	D3	6'-0"	7'-0"	1 3/4"	HM			F1	HM	A3	A2		- -		1, 4
122	D1	3'-0"	7'-0"	1 3/4"	HM			F1	HM	A3	A2		- -		4
123	D1	3'-0"	7'-0"	1 3/4"	HM			F1	HM	A3	A2		- -		4
124	D3	3'-0"	7'-0"	1 3/4"	HM	1'-0"	1'-0"	F1	HM	B3	B4		- -		2,3

GENERAL DOOR NOTES:

A. HOLLOW METAL FRAMES INCLUDE HOLLOW METAL CASED OPENINGS, WINDOW, DOOR FRAMES.

B. FIELD VERIFY ALL OPENING DIMENSIONS FOR FRAMES PRIOR TO FABRICATION.

C. PROVIDE JAMB ANCHORS AT ALL DOORS. PROVIDE A MINIMUM OF ONE ANCHOR FOR EACH 2'-0" OF FRAME OPENING HEIGHT - MINIMUM (3) PER JAMB.

D. PROVIDE A CONTINUOUS BEAD OF SEALANT AT BOTH SIDES OF ALL FRAMES WHERE FRAME ABUTS THE PARTITION.

E. AT STANDARD MASONRY WALLS, FILL DOOR FRAME SOLID WITH MORTAR, UNLESS OTHERWISE NOTED.

F. REFERENCE STRUCTURAL DRAWINGS FOR CMU BOND BEAM LINTELS.

DOOR AND FRAME SCHEDULE REMARKS

HM = HOLLOW METAL STL = STRUCTURAL STEEL

SS = STAINLESS STEEL

1. PAIR OF 3'-0" DOORS
2. 1-0" x 1'-0" LOUVER. IF PAIR OF DOORS, ONE IN EACH DOOR LEAF
3. DOOR UNDERCUT - 3/4"
4. COORDINATE FRAME AND DOOR WITH BMS AND ACCESS CONTROL, SHEET TY101A

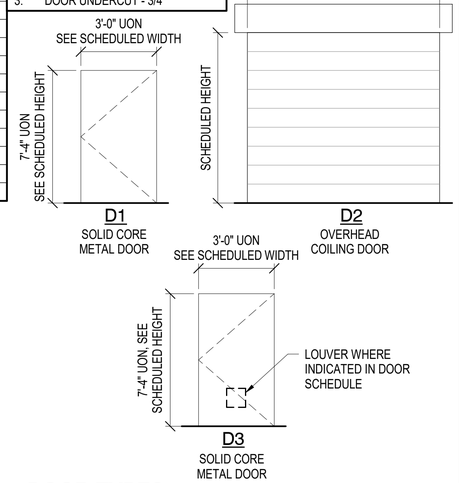

DOOR TYPES

SCALE: 1/4" = 1'-0"

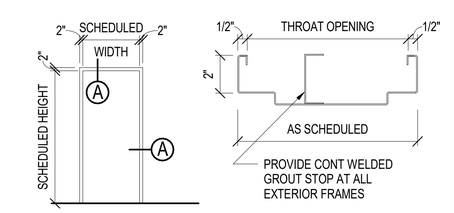

FRAME TYPES

SCALE: 1/4" = 1'-0"

HOLLOW METAL FRAME PROFILE

SCALE: 3" = 1'-0"

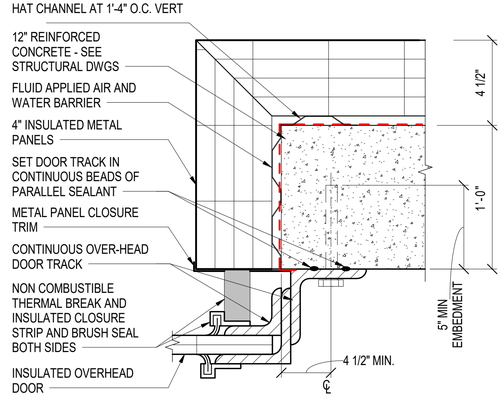

B1 OVERHEAD COILING DOOR JAMB

SCALE: 3" = 1'-0"

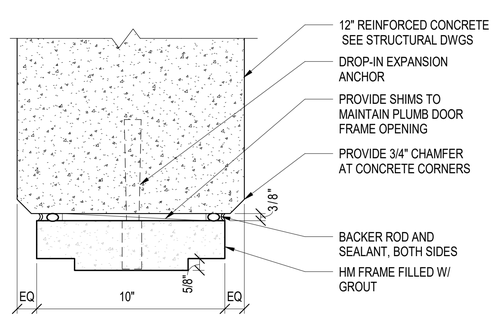

B2 INTERIOR CIP CONCRETE HM HEAD/ JAMB SIM.

SCALE: 3" = 1'-0"

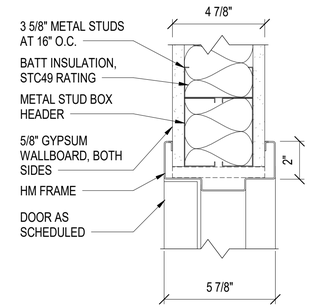

B3 INTERIOR DOOR HEAD

SCALE: 3" = 1'-0"

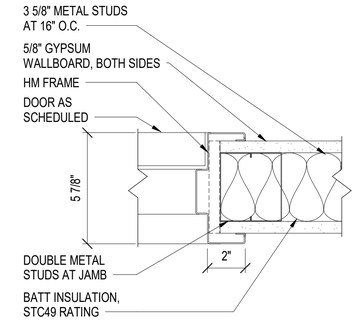

B4 INTERIOR DOOR JAMB

SCALE: 3" = 1'-0"

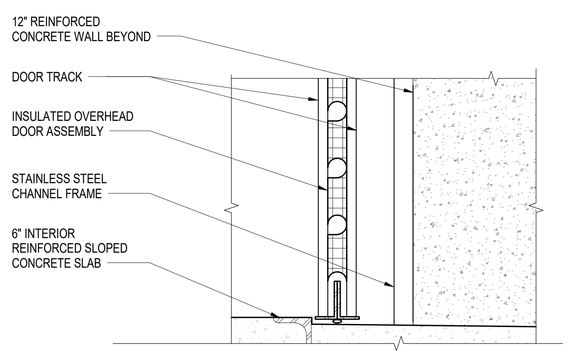

A1 OVERHEAD COILING DOOR SILL

SCALE: 3" = 1'-0"

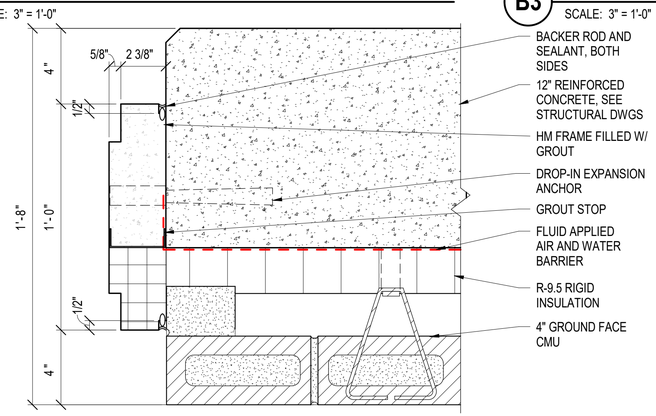

A2 MASONRY CAVITY WALL JAMB DETAIL

SCALE: 3" = 1'-0"

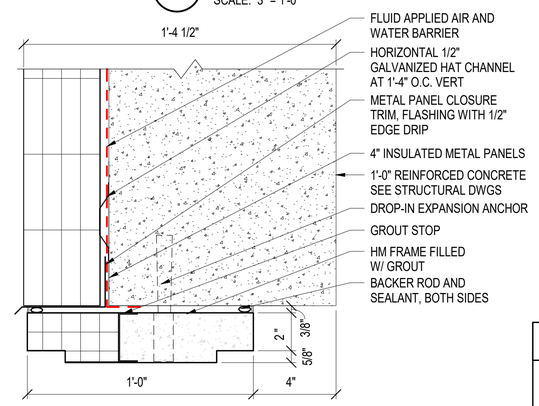

A3 METAL PANEL AND MASONRY HM HEAD

SCALE: 3" = 1'-0"

GRAPHIC SCALE(S)

3" = 1' - 0" 0 3" 6" 1'

1/4" = 1' - 0" 0 1' 5' 10' 15'

SYM	DESCRIPTION	DATE	APPR

A/E INFO

APPROVED

FOR COMMANDER NAVFAC

ACTIVITY
Approved by LCDR VINCE DEL GRECO, ROICC with PWD YORKTOWN, via Email,

SATISFACTORY TO DATE 03/26/2026

DES GJR DRW GJR CHK JEL

PM/DM MME/WJW

BRANCH MANAGER DJD

CHIEF ENG/ARCH JWJ

FIRE PROTECTION HPN

DEPARTMENT OF THE NAVY
NAVAL FACILITIES ENGINEERING SYSTEMS COMMAND
MIDLANT PDC CORE
NAVAL FACILITIES ENGINEERING SYSTEMS COMMAND - MID-ATLANTIC
NAVAL STATION - NORFOLK, VA
NAVAL WEAPONS STATION
YORKTOWN, VIRGINIA
P171 WEAPON MAGAZINES
SEGREGATION FACILITIES
DOOR AND FRAME SCHEDULE, TYPES AND DETAILS

SCALE: AS NOTED

EPROJECT NO.: 1737010

CONSTR. CONTR. NO.

NAVFAC DRAWING NO. 12942077

SHEET 409 OF 499

AE601A

DRAWFORM REVISION: 25 AUGUST 2020

4/1/2026 2:22:44 PM AE601A
C:\Revit Local Files\P171-1737010-A-R21-SEG_gareth.ratti.rvt

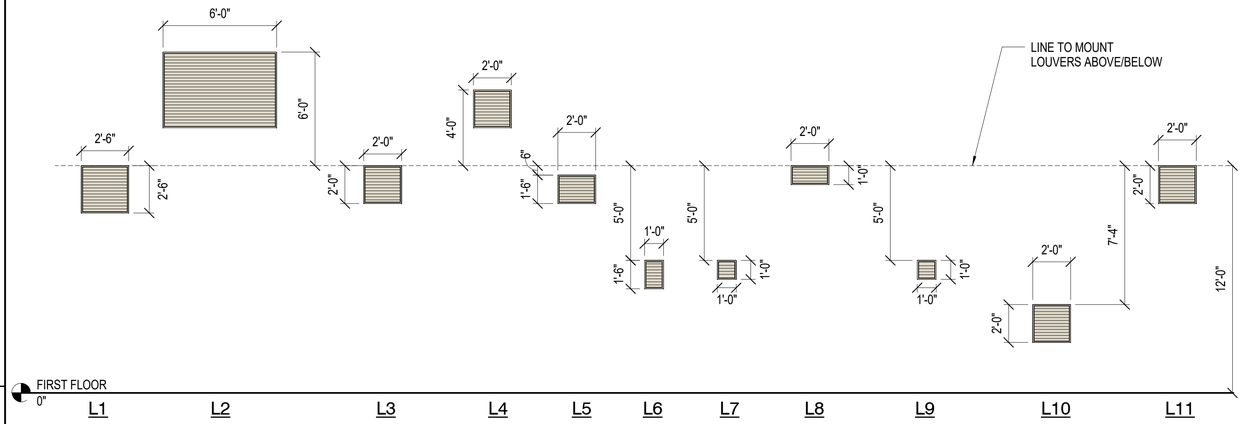

LOUVER TYPES

SCALE: 1/4" = 1'-0"

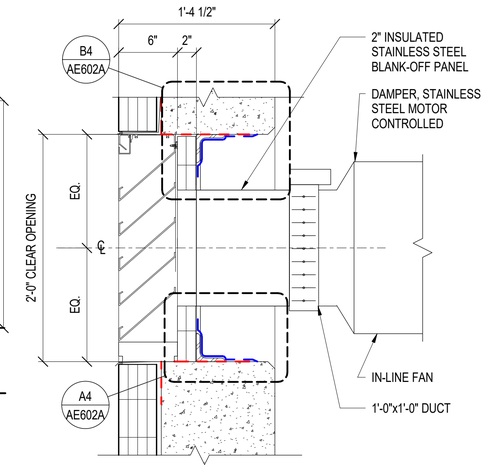

C4 SECTION AT IN-LINE EXHAUST FAN

SCALE: 1 1/2" = 1'-0" (AE901A)

LOUVER SCHEDULE

LOUVER #	TYPE	SIZE WIDTH	SIZE HEIGHT	MOUNTING HEIGHT	HEAD	JAMB	SILL	COMMENTS
L1	D	2'-6"	2'-6"	9'-7 41/128"	C5/AE603A	B5/AE603A	A5/AE603A	
L2	A	6'-0"	4'-0"	14'-0"	C5/AE603A	B5/AE603A	A5/AE603A	
L3	B	2'-0"	2'-0"	10'-0"	B4/AE603A	B4/AE603A	A4/AE603A	
L4	A	2'-0"	2'-0"	14'-0"	C5/AE603A	B5/AE603A	A5/AE603A	
L5	A	2'-0"	1'-6"	10'-0 9/256"	C5/AE603A	B5/AE603A	A5/AE603A	
L6	A	1'-0"	1'-6"	5'-8"	C5/AE603A	B5/AE603A	A5/AE603A	
L7	A	1'-0"	1'-0"	6'-0"	C5/AE603A	B5/AE603A	A5/AE603A	
L8	A	2'-0"	1'-0"	11'-0"	C5/AE603A	B5/AE603A	A5/AE603A	
L9	A	1'-0"	1'-0"	6'-0"	C5/AE603A	B5/AE603A	A5/AE603A	
L10	B	2'-0"	2'-0"	2'-8"	B4/AE603A	B4/AE603A	A4/AE603A	
L11	B	2'-0"	2'-0"	12'-0"	B4/AE603A	B4/AE603A	A4/AE603A	

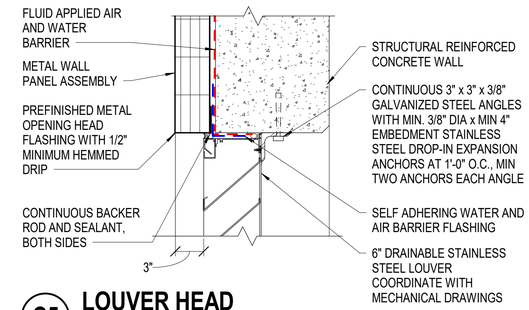

C5 LOUVER HEAD

SCALE: 1 1/2" = 1'-0" TYPE 'A'

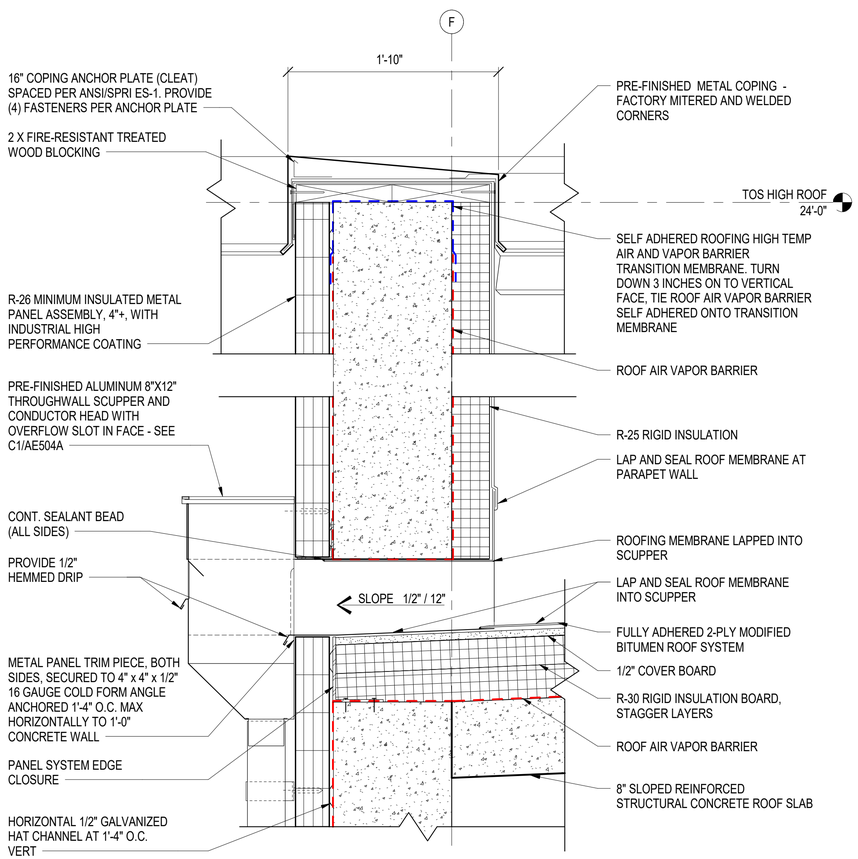

A1 THROUGH PARAPET SCUPPER DETAIL

SCALE: 1 1/2" = 1'-0" (AE103A)

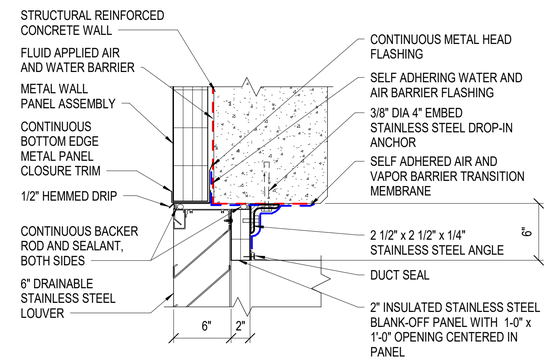

B4 LOUVER HEAD WITH BLANK OFF PANEL

JAMB SIM.

SCALE: 1 1/2" = 1'-0" (AE602A) TYPE 'B'

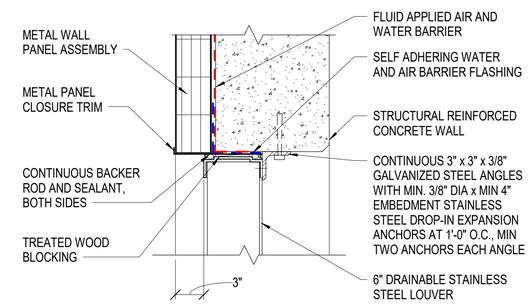

B5 LOUVER JAMB

SCALE: 1 1/2" = 1'-0" TYPE 'A'

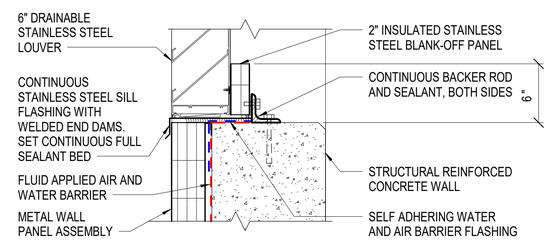

A4 LOUVER SILL WITH BLANK OFF PANEL

SCALE: 1 1/2" = 1'-0" (AE602A) TYPE 'B'

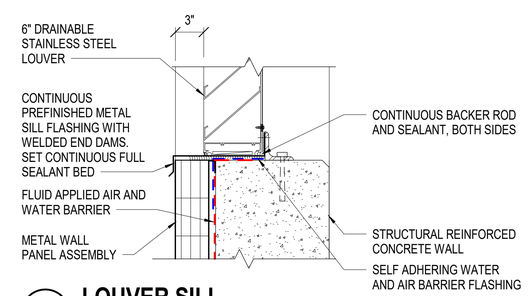

A5 LOUVER SILL

SCALE: 1 1/2" = 1'-0" TYPE 'A'

SHEET NOTES

1. SEE SHEETS AE401A AND AE402A FOR EXTERIOR WALL ASSEMBLY

GRAPHIC SCALE(S)

1/4" = 1' - 0" 0 1' 5' 10' 15'

1 1/2" = 1' - 0" 0 3" 6" 9" 1' 2'

SYM	DESCRIPTION	DATE	APPR

SEAL

A/E INFO

APPROVED

FOR COMMANDER NAVFAC

ACTIVITY
Approved by LCDR VINCE DEL GRECO, RO/CC with PWD YORKTOWN, via Email.

SATISFACTORY TO DATE 03/26/2026

DES GJR DRW GJR CHK JEL
PM/DM MME/WJW
BRANCH MANAGER DJD
CHIEF ENG/ARCH JWJ
FIRE PROTECTION HPN

DEPARTMENT OF THE NAVY
NAVAL FACILITIES ENGINEERING SYSTEMS COMMAND
MID/ANT POC CORE
NAVAL FACILITIES ENGINEERING SYSTEMS COMMAND - MID-ATLANTIC
NAVAL STATION - NORFOLK, VA
NAVAL WEAPONS STATION
YORKTOWN, VIRGINIA
P171 WEAPON MAGAZINES
SEGREGATION FACILITIES
LOUVER SCHEDULE, TYPES, AND DETAILS

SCALE: AS NOTED
EPROJECT NO.: 1737010
CONSTR. CONTR. NO.
NAVFAC DRAWING NO. 12942078
SHEET 410 OF 499
AE602A

DRAWFORM REVISION: 25 AUGUST 2020

4/1/2026 2:22:45 PM AE602A
C:\Revit Local Files\P171-1737010-A-R21-SEG_gareth.ratti.rvt

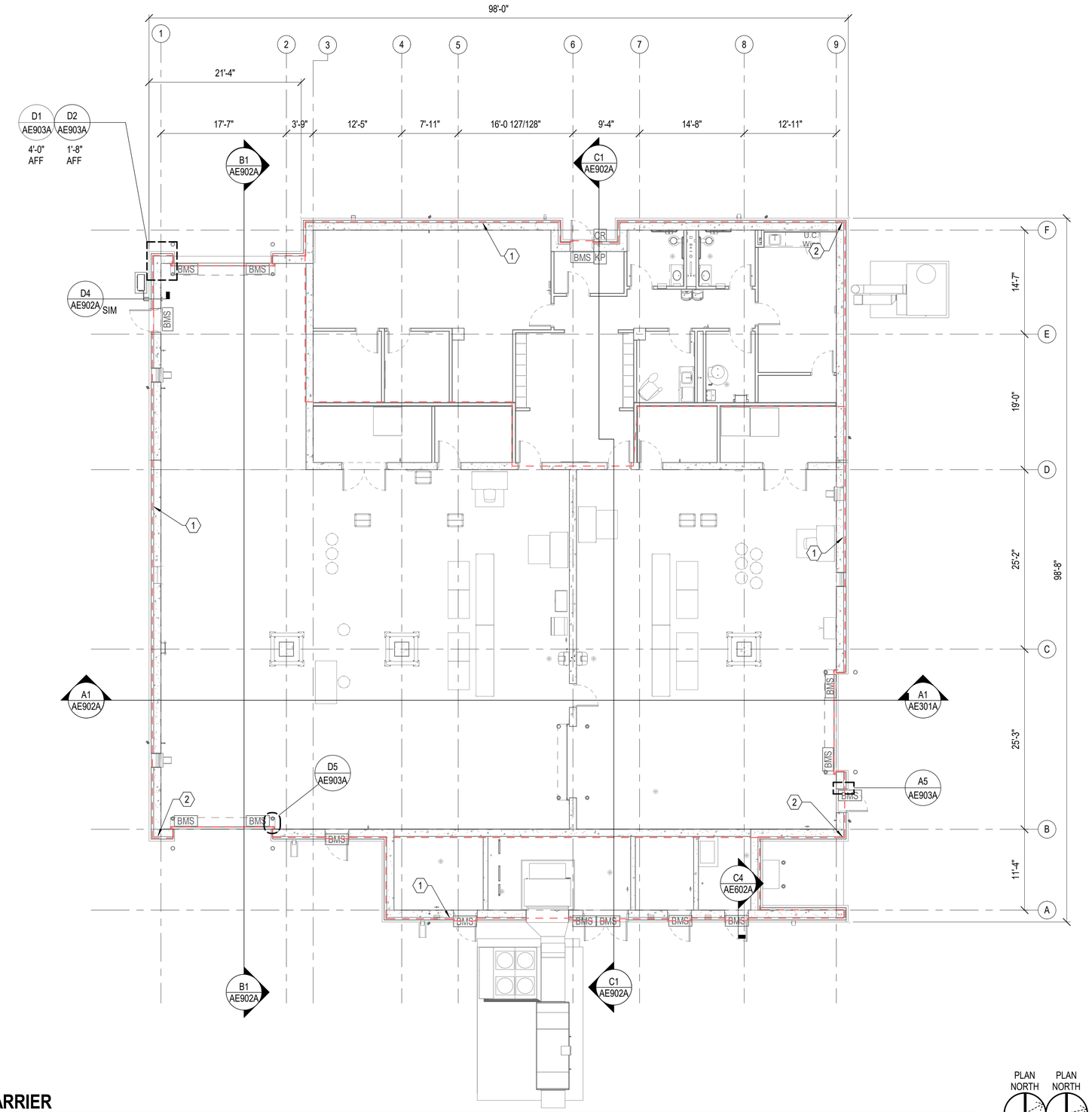

FLOOR PLAN - AIR BARRIER

SCALE: 1/8" = 1'-0"

PLAN NORTH — BLDG 1

PLAN NORTH — BLDG 2

GENERAL NOTES

A. ALL AIR BARRIER PRODUCTS AND ACCESSORIES SHALL BE INSTALLED IN ACCORDANCE WITH MANUFACTURER'S RECOMMENDED INSTALLATION REQUIREMENTS AND SHALL BE COMPATIBLE WITH FLASHING, SEALANTS, COMPONENTS, CLADDING MATERIALS, PENETRATIONS, AND TRANSITION MATERIALS THAT TIE DIRECTLY INTO THE AIR BARRIER ASSEMBLY VERIFY COMPATIBILITY OF MATERIALS INCORPORATED THROUGHOUT THE AIR BARRIER ASSEMBLY INCLUDING TIE-IN TO OTHER BUILDING COMPONENTS TO PROVIDE COMPLETE AIR BARRIER ASSEMBLY.

B. SEE SHEET AE201A FOR ELEVATION NOTES

AIR BARRIER NOTES

1 FLUID APPLIED AIR BARRIER, VAPOR PERMEABLE

2 SEAL ALL JOINTS AND SEAMS. SEAL ALL PENETRATIONS AT REINFORCED CONCRETE SLAB PENETRATIONS

AIR BARRIER ENCLOSURE SURFACE AREA OF EXTERIOR ENVELOPE

EXTERIOR WALLS:
(INCLUDES DOORS)

TOTAL EXTERIOR WALL SURFACE AIR BARRIER SYSTEM:	10,353 SF
TOTAL ROOF SURFACE AREA AIR BARRIER SYSTEM:	8,357 SF
FLOOR:	
CONCRETE FLOOR SLAB:	8,335 SF
TOTAL ENCLOSURE SURFACE AREA:	27,045 SF

THE ENCLOSURE SURFACE AREAS LISTED ABOVE ARE APPROXIMATES FOR THE FLOOR, WALLS AND ROOF. THE SURFACE AREA DOES NOT INCLUDE PENETRATIONS AND UNINTENTIONAL HOLES WITHIN THE AIR BARRIER. THE ENCLOSURE SURFACE AREAS FOR "INTENTIONAL" HOLES IN THE BUILDING ENCLOSURE ARE APPROXIMATES AND DO NOT TAKE INTO ACCOUNT EVERY "INTENTIONAL" HOLE(S). THESE "INTENTIONAL" HOLES INCLUDE AIR INTAKE, EXHAUST LOUVERS, MAKE-UP AIR INTAKES, AND OTHER INTENTIONAL HOLE THAT ARE NOT INCLUDED IN THE AIR BARRIER DESIGN OR CONSTRUCTION. EXTERIOR DOORS (FENESTRATION) ARE NOT INTENTIONAL OPENINGS. FENESTRATION IS INCLUDED IN THE AIR BARRIER TEST BOUNDARY

GRAPHIC SCALE(S)

1/8" = 1' - 0" 0 5' 10' 15' 30'

SYM	DESCRIPTION	DATE	APPR

NAVFAC

SEAL

A/E INFO

APPROVED

FOR COMMANDER NAVFAC

ACTIVITY: Approved by LCDR VINCE DEL GRECO, ROICC with PWD YORKTOWN, via Email,

SATISFACTORY TO DATE 03/26/2026

DES GJR | DRW GJR | CHK JEL

PM/DM MME/WJW

BRANCH MANAGER DJD

CHIEF ENG/ARCH JWJ

FIRE PROTECTION HPN

DEPARTMENT OF THE NAVY
NAVAL FACILITIES ENGINEERING SYSTEMS COMMAND
MIDLANT PDC CORE

NAVAL FACILITIES ENGINEERING SYSTEMS COMMAND - MID-ATLANTIC
NAVAL STATION - NORFOLK, VA

NAVAL WEAPONS STATION YORKTOWN, VIRGINIA
P171 WEAPON MAGAZINES
SEGREGATION FACILITIES

FLOOR PLAN - AIR BARRIER

SCALE: AS NOTED

EPROJECT NO.: 1737010

CONSTR. CONTR. NO.

NAVFAC DRAWING NO. 12942079

SHEET 411 OF 499

AE901A

DRAWFORM REVISION: 25 AUGUST 2020

4/1/2026 2:22:48 PM AE901A
C:\Revit Local Files\P171-1737010-A-R21-SEG_gareth.ratti.rvt

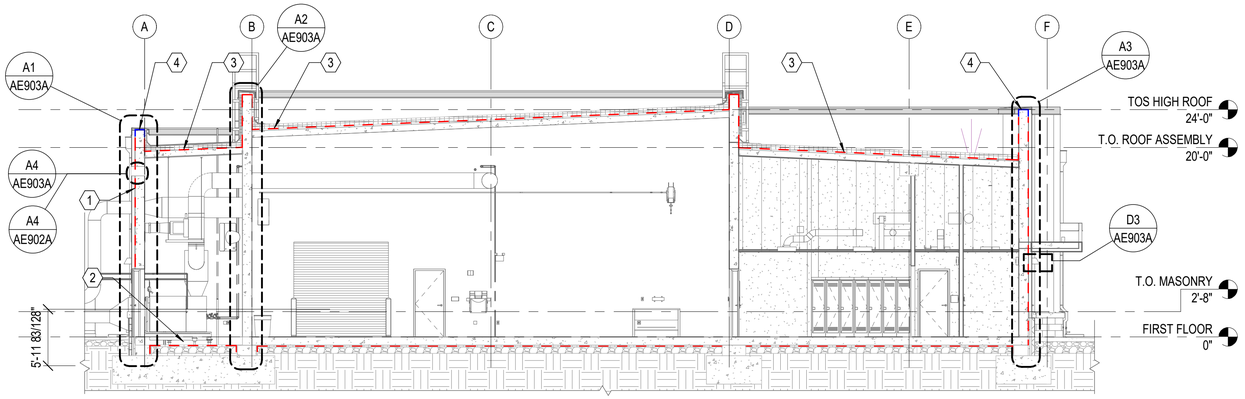

C1 AIR BARRIER BUILDING SECTION - LONGITUDINAL

SCALE: 1/8" = 1'-0" (AE901A)

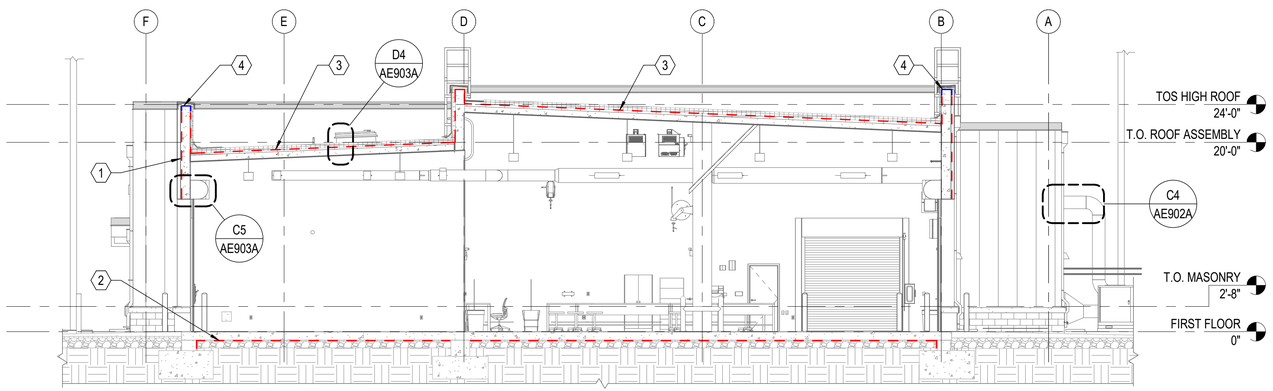

B1 AIR BARRIER BUILDING SECTION - LONGITUDINAL

SCALE: 1/8" = 1'-0" (AE901A)

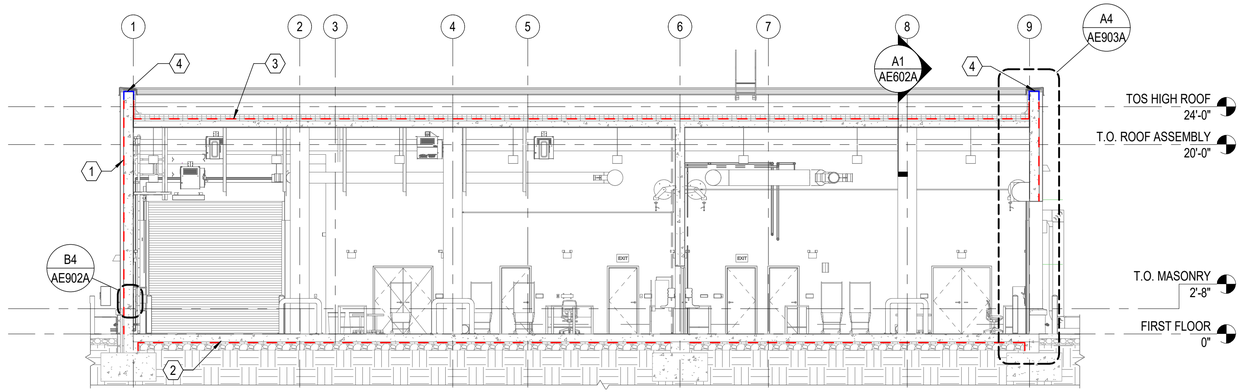

A1 AIR BARRIER BUILDING SECTION - TRANSVERSE

SCALE: 1/8" = 1'-0" (AE901A)

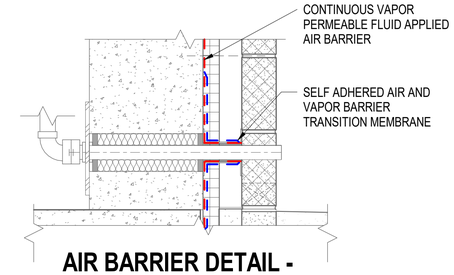

D4 AIR BARRIER DETAIL - PIPE PENETRATION

SCALE: 1 1/2" = 1'-0" (AE901A)

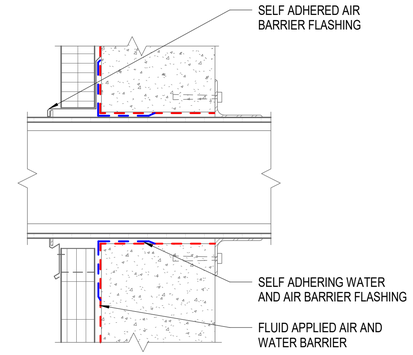

C4 AIR BARRIER DETAIL - DUCT PENETRATION

SCALE: 1 1/2" = 1'-0" (AE902A)

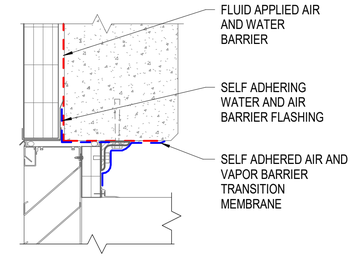

B4 AIR BARRIER DETAIL - LOUVER HEAD

(JAMB/SILL SIM.)

SCALE: 1 1/2" = 1'-0" (AE902A)

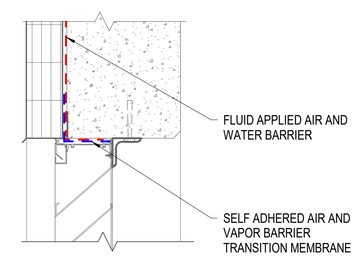

A4 AIR BARRIER DETAIL - LOUVER HEAD

(JAMB/SILL SIM.)

SCALE: 1 1/2" = 1'-0" (AE902A)

GENERAL NOTES

A. ALL AIR BARRIER PRODUCTS AND ACCESSORIES SHALL BE INSTALLED IN ACCORDANCE WITH MANUFACTURER'S RECOMMENDED INSTALLATION REQUIREMENTS AND SHALL BE COMPATIBLE WITH FLASHING AND SEALANTS. ALL SEALANTS, COMPONENTS, CLADDING MATERIALS, PENETRATIONS, AND TRANSITION MATERIALS THAT TIE DIRECTLY INTO THE AIR BARRIER ASSEMBLY SHALL BE CHECKED FOR COMPATIBILITY WITH THE PRIMARY MANUFACTURER OF AIR BARRIER ASSEMBLY. LETTERS OF COMPLIANCE SHALL BE SUBMITTED

B. SEE SHEET AE201A FOR ELEVATION NOTES

AIR BARRIER NOTES

1 FLUID APPLIED AIR BARRIER, VAPOR PERMEABLE

2 VAPOR BARRIER. SEAL ALL JOINTS AND SEAMS. SEAL ALL PENETRATIONS AT REINFORCED CONCRETE SLAB PENETRATIONS

3 SELF ADHERED ROOFING HIGH TEMP AIR AND VAPOR BARRIER AT ROOF ASSEMBLY

4 SELF ADHERED ROOFING HIGH TEMP AIR AND VAPOR BARRIER TRANSITION MEMBRANE. TURN DOWN 3 INCHES ON TO VERTICAL FACE, TIE ROOF AIR VAPOR BARRIER SELF ADHERED ONTO TRANSITION MEMBRANE

AIR BARRIER ENCLOSURE SURFACE AREA OF EXTERIOR ENVELOPE

EXTERIOR WALLS:
(INCLUDES DOORS)

TOTAL EXTERIOR WALL SURFACE AIR BARRIER SYSTEM: 10,100 SF

TOTAL ROOF SURFACE AREA AIR BARRIER SYSTEM: 10,350 SF

FLOOR:
CONCRETE FLOOR SLAB 8,388 SF

TOTAL ENCLOSURE SURFACE AREA: 28,838 SF

THE ENCLOSURE SURFACE AREAS LISTED ABOVE ARE APPROXIMATES FOR THE FLOOR, WALLS AND ROOF. THE SURFACE AREA DOES NOT INCLUDE PENETRATIONS AND UNINTENTIONAL HOLES WITHIN THE AIR BARRIER. THE ENCLOSURE SURFACE AREAS FOR "INTENTIONAL" HOLES IN THE BUILDING ENCLOSURE ARE APPROXIMATES AND DO NOT TAKE INTO ACCOUNT EVERY "INTENTIONAL" HOLE(S). THESE "INTENTIONAL" HOLES INCLUDE AIR INTAKE, EXHAUST LOUVERS, MAKE-UP AIR INTAKES, AND OTHER INTENTIONAL HOLE THAT ARE NOT INCLUDED IN THE AIR BARRIER DESIGN OR CONSTRUCTION. EXTERIOR DOORS (FENESTRATION) ARE NOT INTENTIONAL OPENINGS. FENESTRATION IS INCLUDED IN THE AIR BARRIER TEST BOUNDARY

GRAPHIC SCALE(S)

1/8" = 1' - 0" 0 5' 10' 15' 30'

SYM	DESCRIPTION	DATE	APPR

NAVFAC

SEAL

A/E INFO

APPROVED

FOR COMMANDER NAVFAC

ACTIVITY
Approved by LCDR VINCE DEL GRECO, ROICC with PWD YORKTOWN, via Email.

SATISFACTORY TO DATE 03/26/2026

DES GJR | DRW GJR | CHK JEL
PM/DM MME/WJW
BRANCH MANAGER DJD
CHIEF ENG/ARCH JWJ
FIRE PROTECTION HPN

DEPARTMENT OF THE NAVY
NAVAL FACILITIES ENGINEERING SYSTEMS COMMAND
MIDLANT PDC CORE
NAVAL FACILITIES ENGINEERING SYSTEMS COMMAND - MID-ATLANTIC
NAVAL STATION - NORFOLK, VA
NAVAL WEAPONS STATION YORKTOWN, VIRGINIA
P171 WEAPON MAGAZINES SEGREGATION FACILITIES
AIR BARRIER BUILDING SECTIONS

SCALE: AS NOTED
EPROJECT NO.: 1737010
CONSTR. CONTR. NO.
NAVFAC DRAWING NO. 12942080
SHEET 412 OF 499
AE902A

DRAWFORM REVISION: 25 AUGUST 2020

4/1/2026 2:22:55 PM AE902A
C:\Revit Local Files\P171-1737010-A-R21-SEG_gareth.ratti.rvt

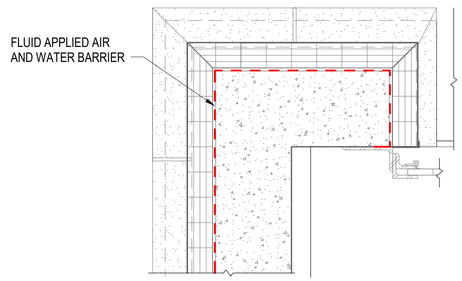

D1 AIR BARRIER DETAIL - CORNER DETAIL AT 4'-0" AFF

SCALE: 1" = 1'-0"

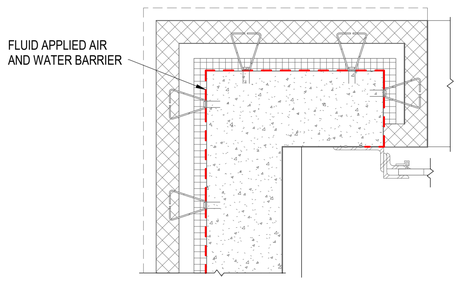

D2 AIR BARRIER DETAIL - CORNER DETAIL AT 1-0" AFF

SCALE: 1" = 1'-0" (AE901A)

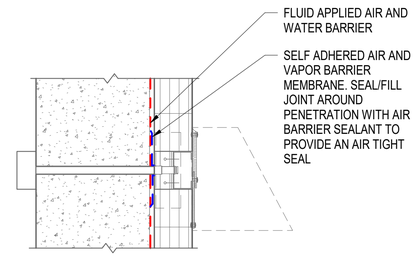

D3 AIR BARRIER DETAIL - EXTERIOR LUMINAIRE DETAIL

SCALE: 1 1/2" = 1'-0" (AE402A)

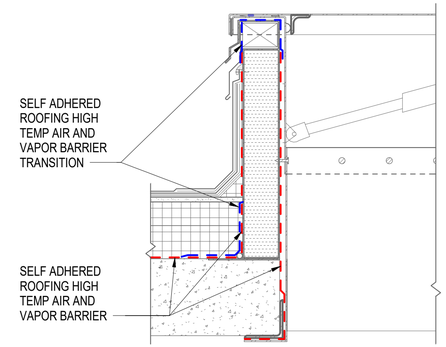

D4 AIR BARRIER DETAIL - ROOF HATCH DETAIL

SCALE: 1 1/2" = 1'-0"

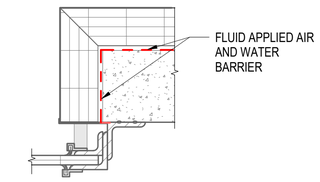

D5 AIR BARRIER DETAIL - OVERHEAD COILING DOOR JAMB

SCALE: 1 1/2" = 1'-0" (AE901A)

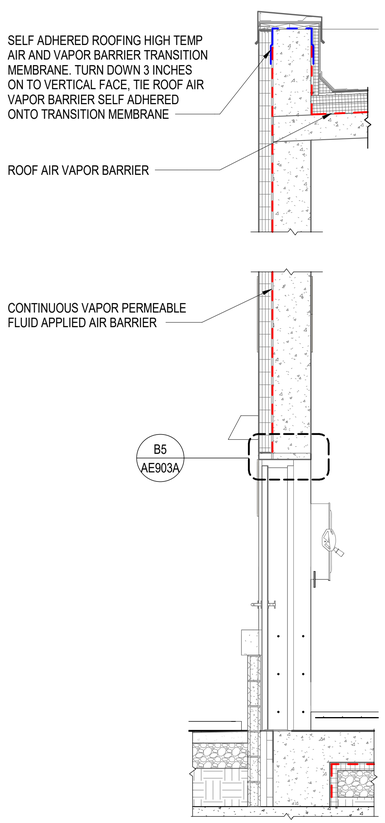

A1 AIR BARRIER WALL SECTION

SCALE: 1/2" = 1'-0"

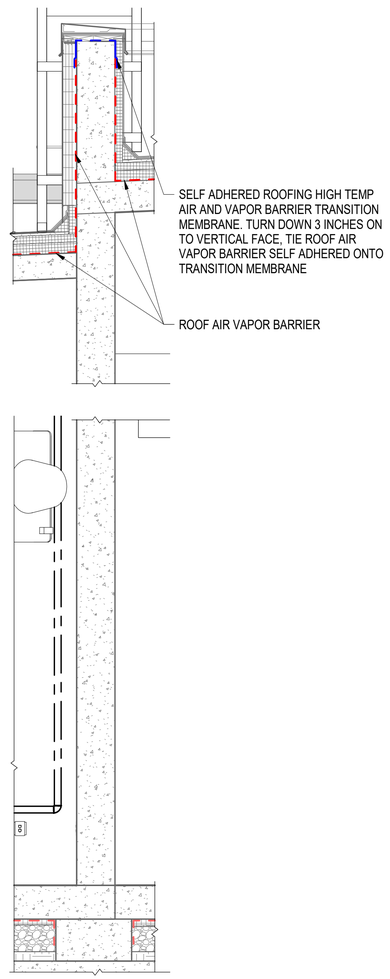

A2 AIR BARRIER WALL SECTION

SCALE: 1/2" = 1'-0"

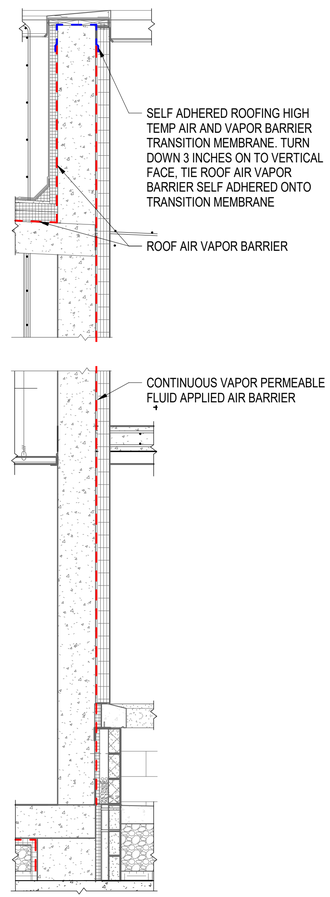

A3 WALL SECTION

SCALE: 1/2" = 1'-0" (AE902A)

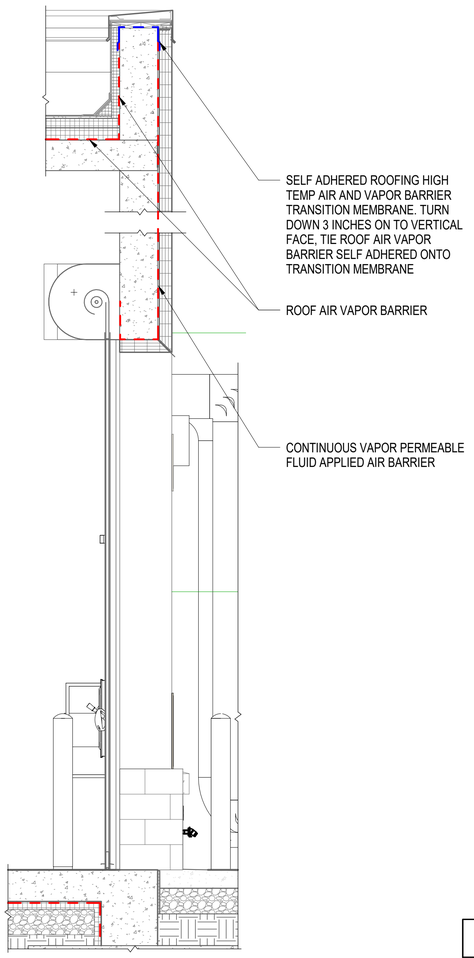

A4 WALL SECTION

SCALE: 1/2" = 1'-0" (AE902A)

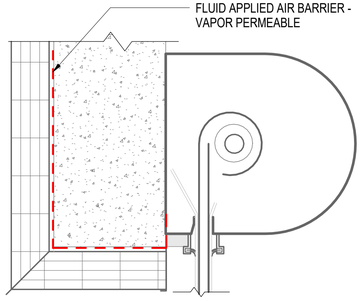

C5 AIR BARRIER DETAIL - OVERHEAD COILING DOOR HEAD

SCALE: 1 1/2" = 1'-0" (AE902A)

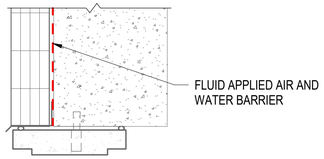

B5 AIR BARRIER DETAIL - METAL PANEL AND MASONRY HM HEAD

SCALE: 1 1/2" = 1'-0" (AE903A)

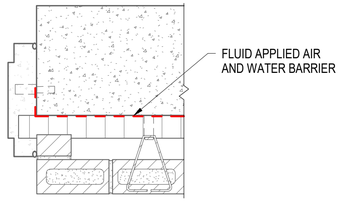

A5 AIR BARRIER DETAIL - MASONRY CAVITY WALL JAMB

SCALE: 1 1/2" = 1'-0" (AE901A)

GRAPHIC SCALE(S)

1" = 1' - 0" 0 6" 1' 2' 3'

1/2" = 1' - 0" 0 6" 1' 2' 3' 4' 5'

1 1/2" = 1' - 0" 0 3" 6" 9" 1' 2'

SYM	DESCRIPTION	DATE	APPR

NAVFAC

SEAL

A/E INFO

APPROVED

FOR COMMANDER NAVFAC

ACTIVITY: Approved by LCDR VINCE DEL GRECO, ROICC with PWD YORKTOWN, via Email.

SATISFACTORY TO DATE 03/26/2026

DES GJR | DRW GJR | CHK JEL

PM/DM MME/WJW

BRANCH MANAGER DJD

CHIEF ENG/ARCH JWJ

FIRE PROTECTION HPN

DEPARTMENT OF THE NAVY
NAVAL FACILITIES ENGINEERING SYSTEMS COMMAND
MIDLANT PDC CORE

NAVAL FACILITIES ENGINEERING SYSTEMS COMMAND - MID-ATLANTIC
NAVAL STATION - NORFOLK, VA

NAVAL WEAPONS STATION YORKTOWN, VIRGINIA

P171 WEAPON MAGAZINES SEGREGATION FACILITIES

AIR BARRIER DETAILS

SCALE: AS NOTED

EPROJECT NO. 1737010

CONSTR. CONTR. NO.

NAVFAC DRAWING NO. 12942081

SHEET 413 OF 499

AE903A

DRAWFORM REVISION: 25 AUGUST 2020

4/1/2026 2:23:01 PM AE903A
C:\Revit Local Files\P171-1737010-A-R21-SEG_gareth.ratti.rvt

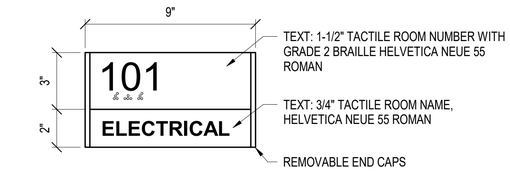

SIGN TYPE A

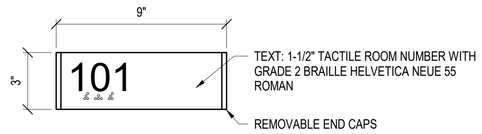

SIGN TYPE B

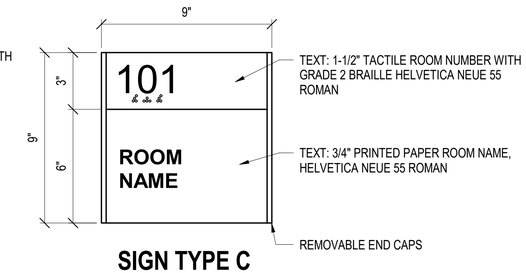

SIGN TYPE C

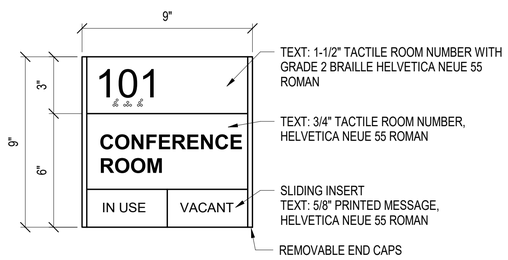

SIGN TYPE F

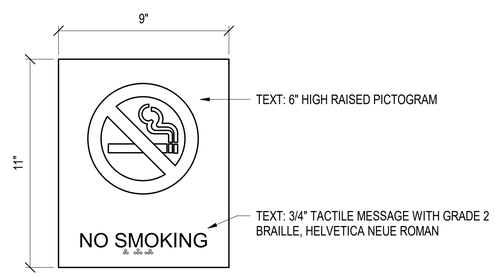

SIGN TYPE K

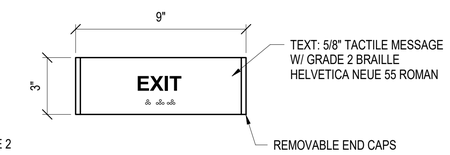

SIGN TYPE Q

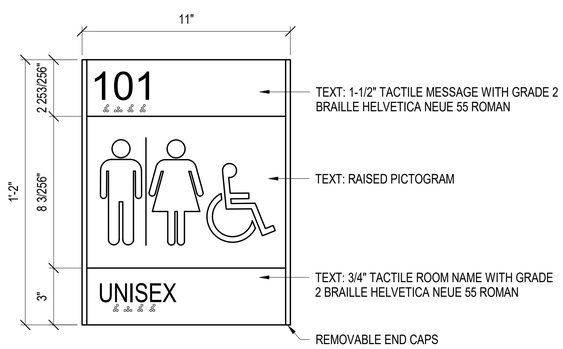

SIGN TYPE R

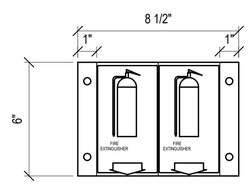

SIGN TYPE T

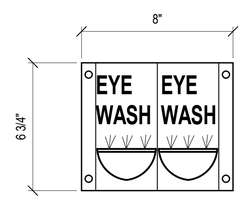

SIGN TYPE V

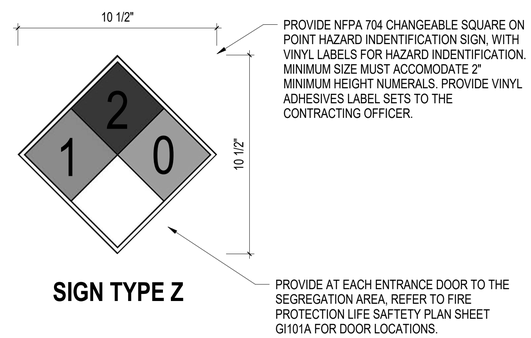

SIGN TYPE Z

A1 SIGNAGE TYPICAL DETAILS

SCALE: 3" = 1'-0"

0' 3" 6" 9"

4/9/2026 1:01:01 PM AG501A
C:\Users\lindsey.r.wright1\Documents\P171-1737010-A-R21-SEG_lindsey.r.wright1.rvt

SYM	DESCRIPTION	DATE	APPR

NAVFAC

SEAL

A/E INFO

APPROVED

FOR COMMANDER NAVFAC

ACTIVITY
Approved by LCDR VINCE DEL GRECO, ROICC with PWD YORKTOWN, via Email.

SATISFACTORY TO DATE 03/26/2026

DES LRW | DRW LRW | CHK JDW

PM/DM MME/WJW

BRANCH MANAGER DJD

CHIEF ENG/ARCH JWJ

FIRE PROTECTION HPN

DEPARTMENT OF THE NAVY
NAVAL FACILITIES ENGINEERING SYSTEMS COMMAND
MIDLANT PDC CORE
NAVAL FACILITIES ENGINEERING SYSTEMS COMMAND - MID-ATLANTIC
NAVAL STATION - NORFOLK, VA
NAVAL WEAPONS STATION
YORKTOWN, VIRGINIA
P171 WEAPON MAGAZINES
SEGREGATION FACILITIES
TYPICAL SIGNAGE DETAILS

SCALE: AS NOTED

EPROJECT NO.: 1737010

CONSTR. CONTR. NO.

NAVFAC DRAWING NO.
12942084

SHEET 414 OF 499

AG501A

DRAWFORM REVISION: 25 AUGUST 2020

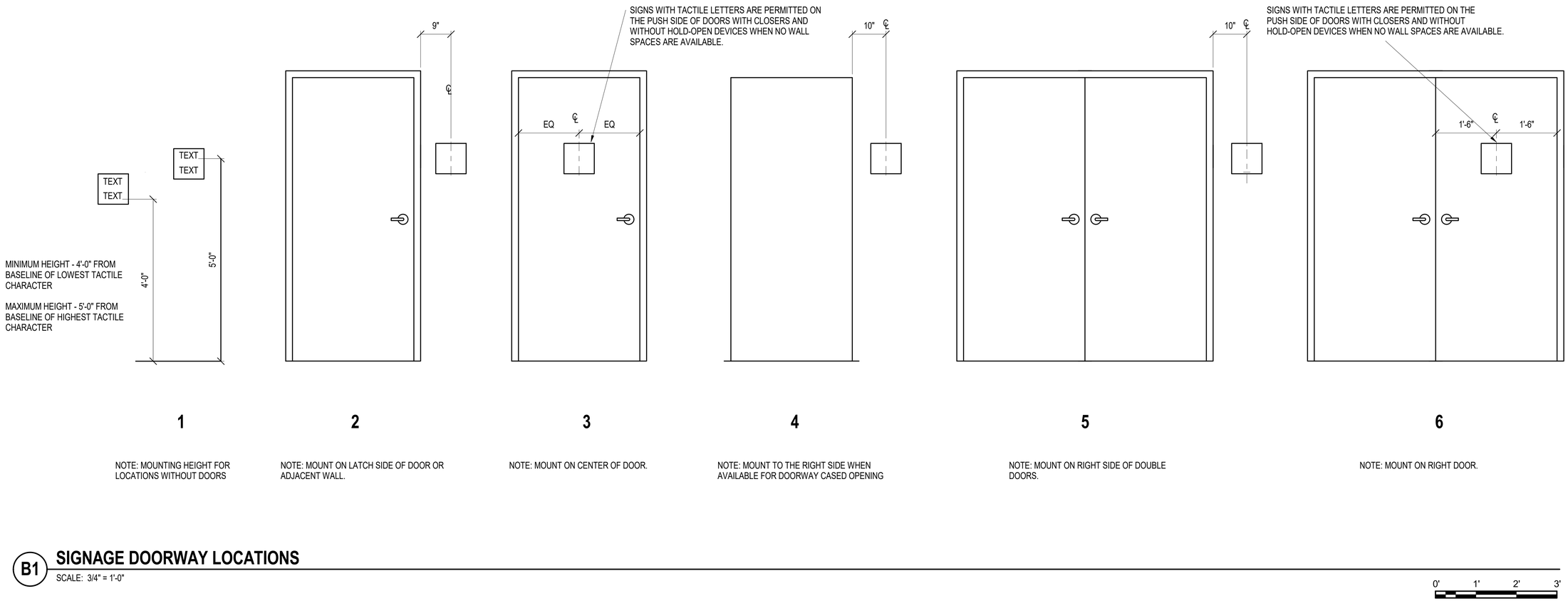

NOTE: MOUNTING HEIGHT FOR LOCATIONS WITHOUT DOORS

NOTE: MOUNT ON LATCH SIDE OF DOOR OR ADJACENT WALL.

NOTE: MOUNT ON CENTER OF DOOR.

NOTE: MOUNT TO THE RIGHT SIDE WHEN AVAILABLE FOR DOORWAY CASED OPENING

NOTE: MOUNT ON RIGHT SIDE OF DOUBLE DOORS.

NOTE: MOUNT ON RIGHT DOOR.

B1 SIGNAGE DOORWAY LOCATIONS

SCALE: 3/4" = 1'-0"

0' 1' 2' 3'

SYM	DESCRIPTION	DATE	APPR

NAVFAC

SEAL

A/E INFO

APPROVED

FOR COMMANDER NAVFAC

ACTIVITY
Approved by LCDR VINCE DEL GRECO, ROICC with PWD YORKTOWN, via Email.

SATISFACTORY TO DATE 03/26/2026

DES LRW | DRW LRW | CHK JDW

PM/DM MME/JWW

BRANCH MANAGER DJD

CHIEF ENG/ARCH JWJ

FIRE PROTECTION HPN

DEPARTMENT OF THE NAVY
NAVAL FACILITIES ENGINEERING SYSTEMS COMMAND
MID-ATLANTIC
MID-ATLANT PDC CORE

NAVAL FACILITIES ENGINEERING SYSTEMS COMMAND
NAVAL STATION - NORFOLK, VA

NAVAL WEAPONS STATION
YORKTOWN, VIRGINIA

P171 WEAPON MAGAZINES
SEGREGATION FACILITIES

TYPICAL SIGNAGE DOORWAY LOCATIONS

SCALE: AS NOTED

EPROJECT NO.: 1737010

CONSTR. CONTR. NO.

NAVFAC DRAWING NO.
12942085

SHEET 415 OF 499

AG502A

DRAWFORM REVISION: 25 AUGUST 2020

4/1/2026 6:52:53 AM AG502A
C:\Users\lindsey.r.wright1\Documents\P171-1737010-A-R21-SEG_lindsey.r.wright1.rvt

SIGNAGE SCHEDULE - FIRST FLOOR

ROOM LOCATION NO.	ROOM LOCATION NAME	SIGN TYPE	SIGN TEXT	QTY	DOORWAY LOCATION	NOTES
101	VESTIBULE	A	SEGREGATION BUILDING	1	2	
102	OPEN OFFICE	C	TBD	1	2	
102	OPEN OFFICE	T		1		INSTALL ABOVE THE FIRE EXTIGUISHER 80" AFF
103	SERVER	A	NMCI	1	2	
104	SHOP LEAD	C	TBD	1	2	
105	GENERAL STORAGE	A	STORAGE	1	5	
106	SECURE TOOL ROOM A	A	TOOL ROOM	1	2	
107	CORRIDOR	A	AREA A	1	2	
107	CORRIDOR	A	AREA B	1	2	
107	CORRIDOR	Q	EXIT	1	3	
107	CORRIDOR	T		1		INSTALL ABOVE THE FIRE EXTIGUISHER 80" AFF
108	TOILET	R		1	2	
109	TOILET	R		1	2	
110	MOTHERS ROOM	F	MOTHER'S ROOM	1	2	
111	PLANNING ROOM	C	PLANNING ROOM	1	2	
112	CUSTODIAN	A	JANITORIAL	1	2	
113	SECURE TOOL ROOM B	A	TOOL ROOM	1	2	
114	GENERAL STORAGE	A	STORAGE	1	5	
115	CONTAINER TRANSFER BAY A	Q	EXIT	1	3	
115	CONTAINER TRANSFER BAY A	T		1		INSTALL ABOVE THE FIRE EXTIGUISHER 80" AFF
116	SEGREGATION CELL A	Q	EXIT	1	3	
116	SEGREGATION CELL A	T		2		INSTALL ABOVE THE FIRE EXTIGUISHER 80" AFF
117	OPEN SEGREGATION AREA A	A	ADMIN AREA	1	2	
117	OPEN SEGREGATION AREA A	A	AREA B	1	2	
117	OPEN SEGREGATION AREA A	Q	EXIT	1	3	
117	OPEN SEGREGATION AREA A	T		1		INSTALL ABOVE THE FIRE EXTIGUISHER 80" AFF
117	OPEN SEGREGATION AREA A	V		1		INSTALL ABOVE THE EYE WASH STATION 80" AFF
118	OPEN SEGREGATION AREA B	A	ADMIN AREA	1	2	
118	OPEN SEGREGATION AREA B	A	AREA A	1	2	
118	OPEN SEGREGATION AREA B	Q	EXIT	1	3	
118	OPEN SEGREGATION AREA B	T		1		INSTALL ABOVE THE FIRE EXTIGUISHER 80" AFF
118	OPEN SEGREGATION AREA B	V		1	1	INSTALL ABOVE THE EYE WASH STATION 80" AFF
119	SEGREGATION CELL B	Q	EXIT	1	3	
119	SEGREGATION CELL B	T		1		INSTALL ABOVE THE FIRE EXTIGUISHER 80" AFF
120	SPRINKLER ROOM	A	SPRINKLER	1	2	EXTERIOR
120	SPRINKLER ROOM	T		1		INSTALL ABOVE THE FIRE EXTIGUISHER 80" AFF
121	MECHANICAL ROOM	A	MECHANICAL	1	5	EXTERIOR
121	MECHANICAL ROOM	T		1		INSTALL ABOVE THE FIRE EXTIGUISHER 80" AFF
122	ELECTRICAL ROOM	A	ELECTRICAL	1	2	EXTERIOR
122	ELECTRICAL ROOM	T		1		INSTALL ABOVE THE FIRE EXTIGUISHER 80" AFF
123	AIR	A	AIR COMPRESSOR	1	2	EXTERIOR
123	AIR	T		1		INSTALL ABOVE THE FIRE EXTIGUISHER 80" AFF
124	STOR.	A	STORAGE	1	2	
125	FORKLIFT CHARGING	V		1		INSTALL ABOVE THE EYE WASH STATION 80" AFF

SIGNAGE SCHEDULE IS THE SAME FOR BOTH THE SMALL ARMS AND THE BOMBS BUILDINGS.

GENERAL SHEET NOTES

A. ALL SIGN TYPES, TEXT, AND ROOM NUMBERS MUST BE VERIFIED WITH END USER AND APPROVED BY CONSTRUCTION MANAGER PRIOR TO FABRICATION

B. LOCATIONS OF SIGNS SHALL BE DETERMINED IN COORDINATION WITH THE PROJECT ARCHITECT AND THE CONSTRUCTION MANAGER AT THE SITE. SIGN FABRICATOR MUST ARRANGE FOR MEETING AT THE SITE TO COORDINATE AND CONFIRM FINAL SIGNAGE LOCATIONS

C. SIGNAGE MUST BE FABRICATED AND INSTALLED TO MEET ABA REQUIREMENTS WITH REGARD TO BRAILLE, RAISED CHARACTERS, FINISHES (CONTRAST), SIZE AND MOUNTING HEIGHT

D. SEE SHEET AG501A FOR TYPICAL SIGNAGE DETAILS AND SHEET AG502A FOR MOUNTING HEIGHTS

E. MOUNTING OF SIGNAGE MUST BE BY MECHANICAL FASTENERS

F. UNLESS OTHERWISE NOTED, SIGNS ARE FOR INTERIOR USE

G. SIGNAGE FINISHES ARE AS LISTED ON SHEET IN601A

SYM	DESCRIPTION	DATE	APPR

NAVFAC

SEAL

A/E INFO

APPROVED

FOR COMMANDER NAVFAC

ACTIVITY
Approved by LCDR VINCE DEL GRECO, ROICC with PWD YORKTOWN, via Email.

SATISFACTORY TO DATE 03/26/2026

DES LRW | DRW LRW | CHK JDW

PM/DM MME/JWW

BRANCH MANAGER DJD

CHIEF ENG/ARCH JWJ

FIRE PROTECTION HPN

DEPARTMENT OF THE NAVY
NAVAL FACILITIES ENGINEERING SYSTEMS COMMAND
MID-ANT POC CORE
NAVAL FACILITIES ENGINEERING SYSTEMS COMMAND - MID-ATLANTIC
NAVAL STATION - NORFOLK, VA
NAVAL WEAPONS STATION
YORKTOWN, VIRGINIA
P171 WEAPON MAGAZINES
SEGREGATION FACILITIES
SIGNAGE SCHEDULE

SCALE: AS NOTED

EPROJECT NO.: 1737010

CONSTR. CONTR. NO.

NAVFAC DRAWING NO.
12942086

SHEET 416 OF 499

AG601A

DRAWFORM REVISION: 25 AUGUST 2020

4/1/2026 6:52:56 AM AG601A
C:\Users\lindsey.r.wright1\Documents\P171-1737010-A-R21-SEG_lindsey.r.wright1.rvt

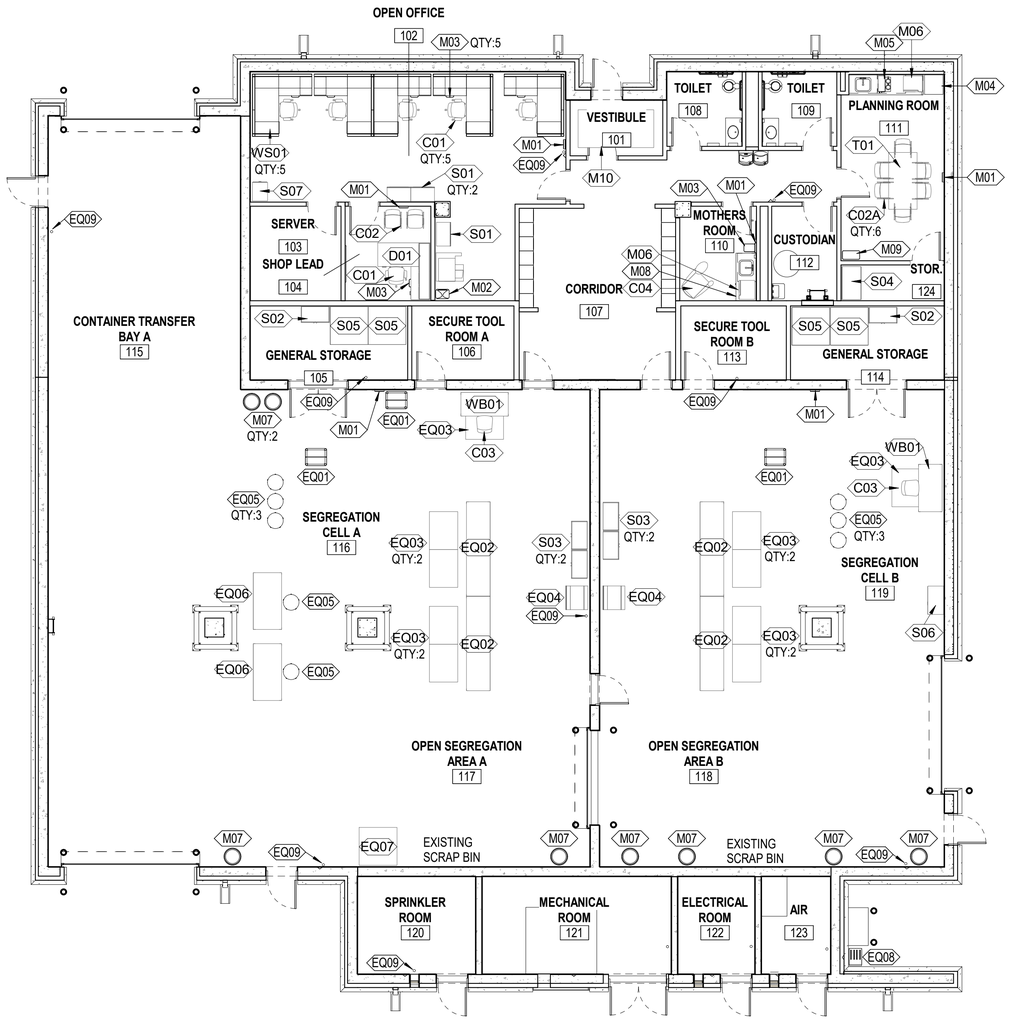

A1 FURNITURE PLAN - SMALL ARMS

SCALE: 1/8" = 1'-0"

PLAN NORTH

GENERAL SHEET NOTES

A. ALL FURNITURE, FIXTURES, AND EQUIPMENT (FF&E) INDICATED IS PROVIDED FOR COORDINATION PURPOSES ONLY. PROCUREMENT OF NEW FF&E IS NOT PART OF THE BASE BID CONSTRUCTION CONTRACT. CONSTRUCTION FUNDS WILL NOT BE USED. FF&E WILL BE FUNDED SEPARATELY AS AN OPTION TO THE CONSTRUCTION CONTRACT.

B. MORE INFORMATION ON DESIGN, INVENTORY OF EXISTING FURNITURE, STORAGE OF EXISTING FURNITURE, PROCUREMENT OF NEW FURNITURE, AND INSTALLATION OF BOTH NEW AND EXISTING FURNITURE, FIXTURES, AND EQUIPMENT CAN BE FOUND IN SPECIFICATION SECTION 12 00 01.00 20 AND THE PRICE SCHEDULE.

FF&E SCHEDULE

C01	ERGONOMIC TASK CHAIR WITH ARMS
C02	TRAINING CHAIR WITH ARMS AND GLIDES
C02A	TRAINING CHAIR WITH ARMS AND CASTERS
C03	UPHOLSTERED TASK CHAIR WITHOUT ARMS
C04	LOUNGE CHAIR WITH ARMS
D01	L-SHAPE DESK WITH HUTCH ON RETURN
EQ01	UTILITY CART, 25W X 44L
EQ02	HEAVY DUTY CONVEYOR BELT, 30W X 144L
EQ03	ANTI-STATIC FLOOR MAT, 36D X 48W
EQ04	VIDMAR CABINET 6 DWR, 30W X 27.75D X 59H
EQ05	LOW STOOL
EQ06	ADJUSTABLE HEIGHT WORKBENCH, 72W X 36D
EQ07	SCALE
EQ08	PORTABLE EYE WASH
EQ09	FIRE EXTINGUISHER - GFGI
M01	CLOCK WALL-MOUNT 12" DIAMETER
M02	CLASSIFIED SHREDDER
M03	DESK TRASH CAN
M04	REFRIGERATOR
M05	COFFEE BREWER - 3 BURNER, SIDE-BY-SIDE
M06	COUNTERTOP MICROWAVE
M07	32 GALLON TRASH CAN
M08	UNDERCOUNTER REFRIGERATOR
M09	TRASH CAN SLIM TALL SIZE
M10	WALK-OFF MAT, 48W X 96L
S01	LATERAL FILE 3 DRAWER 30W X 20D X 44H
S02	DOUBLE DOOR STORAGE CABINET 36W X 20D X 66h
S03	2 DOOR WARDROBE 36W X 20D X 66H
S04	HEAVY DUTY SHELVING UNIT, 42W X 24D X 76H
S05	WIDE SPAN STORAGE, 48W X 48D X 84H
S06	FLAMMABLE STORAGE CABINET 36W X 20D X 60H
S07	SAFE - LEGAL SIZE - 2 DRAWER
T01	RECTANGULAR MEETING TABLE, 30D X72W
WB01	WORKBENCH, 60W X 30D
WS01	WORKSTATION SYSTEMS 3 STACKER PANEL 72W X 72D X 66H

GRAPHIC SCALE(S)

1/8" = 1' - 0" 0 5' 10' 15' 30'

SYM	DESCRIPTION	DATE	APPR

SEAL

A/E INFO

APPROVED

FOR COMMANDER NAVFAC

ACTIVITY
Approved by LCDR VINCE DEL GRECO, ROICC with PWD YORKTOWN, via Email.

SATISFACTORY TO DATE 03/26/2026

DES LRW DRW LRW CHK JDW

PM/DM MME/JWW

BRANCH MANAGER DJD

CHIEF ENG/ARCH JWJ

FIRE PROTECTION HPN

DEPARTMENT OF THE NAVY
NAVAL FACILITIES ENGINEERING SYSTEMS COMMAND
MID.ANT DC CORE

NAVAL FACILITIES ENGINEERING SYSTEMS COMMAND - MID-ATLANTIC
NAVAL STATION - NORFOLK, VA

NAVAL WEAPONS STATION
YORKTOWN, VIRGINIA

P171 WEAPON MAGAZINES
SEGREGATION FACILITIES

FURNITURE PLAN - SEGREGATION BUILDING SMALL ARMS

SCALE: AS NOTED

EPROJECT NO.: 1737010

CONSTR. CONTR. NO.

NAVFAC DRAWING NO.
12942087

SHEET 417 OF 499

IF101A

DRAWFORM REVISION: 25 AUGUST 2020

3/31/2026 2:56:40 PM IF101A
C:\Users\lindsey.r.wright1\Documents\P171-1737010-I-R21-SEG_lindsey.r.wright1.rvt

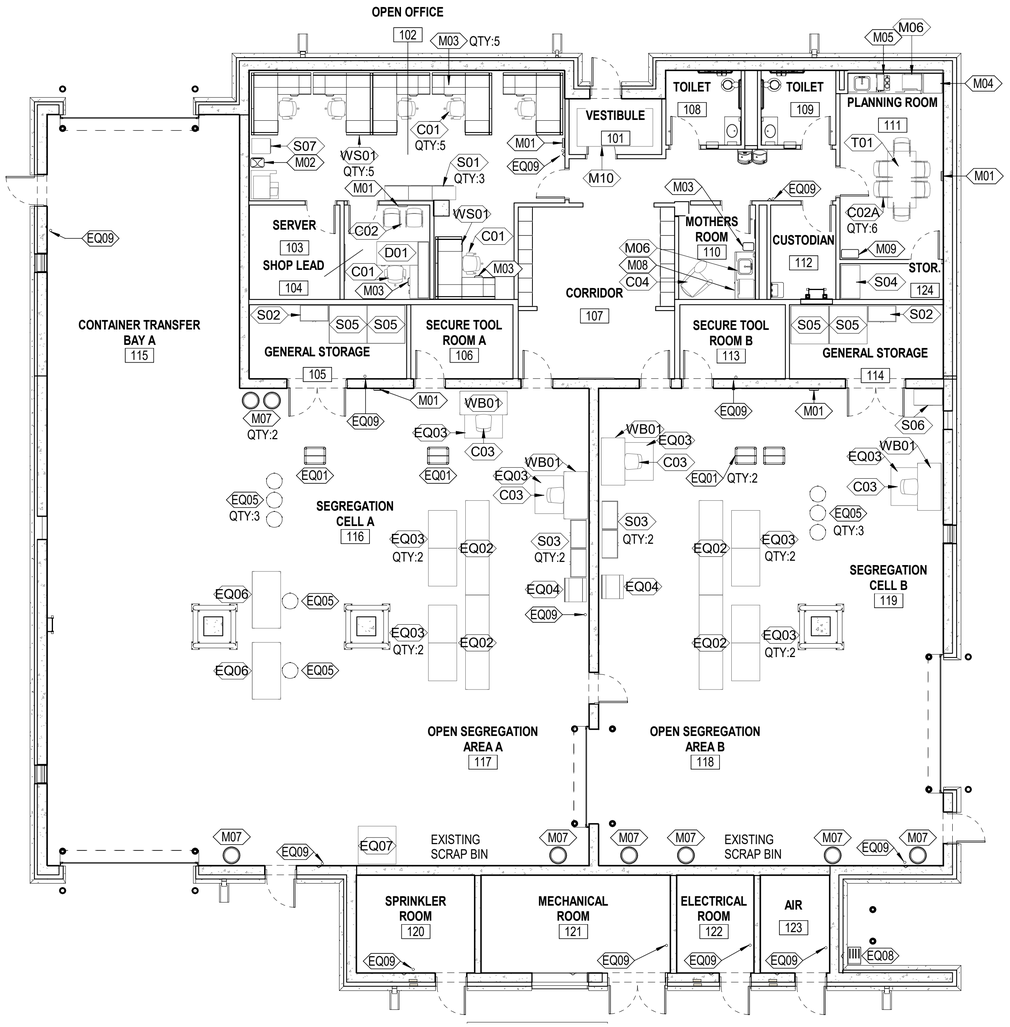

A1 FURNITURE PLAN - BOMBS

SCALE: 1/8" = 1'-0"

PLAN NORTH

GENERAL SHEET NOTES

A. ALL FURNITURE, FIXTURES, AND EQUIPMENT (FF&E) INDICATED IS PROVIDED FOR COORDINATION PURPOSES ONLY. PROCUREMENT OF NEW FF&E IS NOT PART OF THE BASE BID CONSTRUCTION CONTRACT. CONSTRUCTION FUNDS WILL NOT BE USED. FF&E WILL BE FUNDED SEPARATELY AS AN OPTION TO THE CONSTRUCTION CONTRACT.

B. MORE INFORMATION ON DESIGN, INVENTORY OF EXISTING FURNITURE, STORAGE OF EXISTING FURNITURE, PROCUREMENT OF NEW FURNITURE, AND INSTALLATION OF BOTH NEW AND EXISTING FURNITURE, FIXTURES, AND EQUIPMENT CAN BE FOUND IN SPECIFICATION SECTION 12 00 01.00 20 AND THE PRICE SCHEDULE.

FF&E SCHEDULE

C01	ERGONOMIC TASK CHAIR WITH ARMS
C02	TRAINING CHAIR WITH ARMS AND GLIDES
C02A	TRAINING CHAIR WITH ARMS AND CASTERS
C03	UPHOLSTERED TASK CHAIR WITHOUT ARMS
C04	LOUNGE CHAIR WITH ARMS
D01	L-SHAPE DESK WITH HUTCH ON RETURN
EQ01	UTILITY CART, 25W X 44L
EQ02	HEAVY DUTY CONVEYOR BELT, 30W X 144L
EQ03	ANTI-STATIC FLOOR MAT, 36D X 48W
EQ04	VIDMAR CABINET 6 DWR, 30W X 27.75D X 59H
EQ05	LOW STOOL
EQ06	ADJUSTABLE HEIGHT WORKBENCH, 72W X 36D
EQ07	SCALE
EQ08	PORTABLE EYE WASH
EQ09	FIRE EXTINGUISHER - GFGI
M01	CLOCK WALL-MOUNT 12" DIAMETER
M02	CLASSIFIED SHREDDER
M03	DESK TRASH CAN
M04	REFRIGERATOR
M05	COFFEE BREWER - 3 BURNER, SIDE-BY-SIDE
M06	COUNTERTOP MICROWAVE
M07	32 GALLON TRASH CAN
M08	UNDERCOUNTER REFRIGERATOR
M09	TRASH CAN SLIM TALL SIZE
M10	WALK-OFF MAT, 48W X 96L
S01	LATERAL FILE 3 DRAWER 30W X 20D X 44H
S02	DOUBLE DOOR STORAGE CABINET 36W X 20D X 66h
S03	2 DOOR WARDROBE 36W X 20D X 66H
S04	HEAVY DUTY SHELVING UNIT, 42W X 24D X 76H
S05	WIDE SPAN STORAGE, 48W X 48D X 84H
S06	FLAMMABLE STORAGE CABINET 36W X 20D X 60H
S07	SAFE - LEGAL SIZE - 2 DRAWER
T01	RECTANGULAR MEETING TABLE, 30D X72W
WB01	WORKBENCH, 60W X 30D
WS01	WORKSTATION SYSTEMS 3 STACKER PANEL 72W X 72D X 66H

GRAPHIC SCALE(S)

1/8" = 1' - 0" 0 5' 10' 15' 30'

SYM	DESCRIPTION	DATE	APPR

SEAL

A/E INFO

APPROVED

FOR COMMANDER NAVFAC

ACTIVITY
Approved by LCDR VINCE DEL GRECO, ROICC with PWD YORKTOWN, via Email,

SATISFACTORY TO DATE 03/26/2026

DES LRW | DRW LRW | CHK JDW

PM/DM MME/JWW

BRANCH MANAGER DJD

CHIEF ENG/ARCH JWJ

FIRE PROTECTION HPN

DEPARTMENT OF THE NAVY
NAVAL FACILITIES ENGINEERING SYSTEMS COMMAND
MIDLANT DC CORE

NAVAL FACILITIES ENGINEERING SYSTEMS COMMAND - MID-ATLANTIC
NAVAL STATION - NORFOLK, VA

NAVAL WEAPONS STATION
YORKTOWN, VIRGINIA
P171 WEAPON MAGAZINES
SEGREGATION FACILITIES

FURNITURE PLAN - SEGREGATION BUILDING BOMBS

SCALE: AS NOTED

EPROJECT NO.: 1737010

CONSTR. CONTR. NO.

NAVFAC DRAWING NO.
12942088

SHEET 418 OF 499

IF102A

DRAWFORM REVISION: 25 AUGUST 2020

3/31/2026 2:57:05 PM IF102A
C:\Users\lindsey.r.wright1\Documents\P171-1737010-R21-SEG_lindsey.r.wright1.rvt

FINISH SCHEDULE - FIRST FLOOR

ROOM NO.	ROOM NAME	FLOOR	BASE	CEILING FINISH	WALL NORTH FINISH	WALL EAST FINISH	WALL SOUTH FINISH	WALL WEST FINISH	NOTES
101	VESTIBULE	EXY1	EXB1	ACT1	PT1	PT1	PT2	PT1	
102	OPEN OFFICE	EXY1	EXB1	ACT1	PT2	PT1	PT1	PT1	
103	SERVER	SC	RB1	EXP	PT1	PT1	PT1	PT1	
104	SHOP LEAD	EXY1	EXB1	ACT1	PT1	PT1	PT2	PT1	
105	GENERAL STORAGE	SC	RB1	PT4	PT1	PT1	PT1	PT1	
106	SECURE TOOL ROOM A	SC	RB1	PT4	PT1	PT1	PT1	PT1	
107	CORRIDOR	EXY1	EXB1	ACT1	PT1	PT1	PT2	PT1	
108	TOILET	EXY1	PWT1	PT4	PWT1	PWT1	PWT1	PWT1	1, 2, 4
109	TOILET	EXY1	PWT1	PT4	PWT1	PWT1	PWT1	PWT1	1, 2, 4
110	MOTHERS ROOM	EXY1	EXB1	PT4	PT1	PT1	PT2	PT1	2
111	PLANNING ROOM	EXY1	EXB1	ACT1	PT2	PT1	PT1	PT1	2
112	CUSTODIAN	EXY1	EXB1	EXP	PT1	PT1	PT1	PT1	3
113	SECURE TOOL ROOM B	SC	RB1	PT4	PT1	PT1	PT1	PT1	
114	GENERAL STORAGE	SC	RB1	PT4	PT1	PT1	PT1	PT1	
115	CONTAINER TRANSFER BAY A	SC	RB1	EXP	PT1	PT1	PT1	PT1	
116	SEGREGATION CELL A	SC	RB1	EXP	PT1	PT1	PT1	PT1	
117	OPEN SEGREGATION AREA A	SC	RB1	EXP	PT1	PT1	PT1	PT1	
118	OPEN SEGREGATION AREA B	SC	RB1	EXP	PT1	PT1	PT1	PT1	
119	SEGREGATION CELL B	SC	RB1	EXP	PT1	PT1	PT1	PT1	
120	SPRINKLER ROOM	SC	RB1	EXP	PT1	PT1	PT1	PT1	
121	MECHANICAL ROOM	SC	RB1	EXP	PT1	PT1	PT1	PT1	
122	ELECTRICAL ROOM	SC	RB1	EXP	PT1	PT1	PT1	PT1	
123	AIR	SC	RB1	EXP	PT1	PT1	PT1	PT1	
124	STOR.	SC	RB1	PT4	PT1	PT1	PT1	PT1	
125	FORKLIFT CHARGING	-	-	-	-	-	-	-	

FINISH SCHEDULE IS THE SAME FOR BOTH THE SMALL ARMS AND THE BOMBS BUILDINGS

FINISH LEGEND

FINISH TAG	FINISH	MANUFACTURER	STYLE / TYPE	COLOR	Comments
CEILING FINISH					
ACT1	ACOUSTIC CEILING TILE	ARMSTRONG	CALLA	WHITE	
PT4	PAINT (EPOXY)	SHERWIN WILLIAMS	SW 7757	HIGH REFLECTIVE WHITE	CEILING PAINT, SHEEN - FLAT
WALL FINISH					
EXB1	INTEGRAL RESINOUS EXPOXY WALL BASE	DUR-A-FLEX	HYBRIFLEX EQ	Q28-21	
GR1	GROUT	CUSTOM BUILDING PRODUCTS	EPOXY GROUT	DELOREAN GRAY	
PT1	PAINT (EPOXY)	SHERWIN WILLIAMS	SW 7657	TINSMITH	FIELD PAINT, SHEEN - EGGSHELL
PT2	PAINT (EPOXY)	SHERWIN WILLIAMS	SW 7619	LABRADORITE	ACCENT PAINT, SHEEN - EGGSHELL
PWT1	PORCELAIN WALL TILE	ATLAS CONCORDE USA	ELEMENT	SILVER	
FLOOR FINISH					
EXY1	RESINOUS EPOXY FLOOR	DUR-A-FLEX	HYBRIFLEX EQ	Q28-21	
RB1	RUBBER BASE	TARKETT	COLOR MATCH	71 STORM CLOUD	4"H
SC	SEALED CONCRETE	-	-	-	
MISCELLANEOUS					
CG1	CORNER GUARDS	CONSTRUCTION SPECIALITES	CO-8	407 SILVER	
L1	HDPE LOCKERS	SCRANTON	TUFFTEC	CHARCOAL GREY	
PL1	PLASTIC LAMINATE	WILSONART	7964K-12	SKYLINE WALNUT	
PT3	PAINT (EPOXY)	SHERWIN WILLIAMS	ROYCROFT PEWTER	2848	DOOR AND TRIM PAINT, SHEEN - SEMI-GLOSS
S1	SIGNAGE BACKGROUND	2/90	ESSENTIALS	734 DARK GREY	
S2	SIGNAGE COPY	2/90	ESSENTIALS	733 PEARL GREY	
S3	SIGNAGE TRIM	2/90	ESSENTIALS	109 STAINLESS	
SS1	SOLID SURFACE	HI-MACS	VW02	SILVER GRAVEL	
WP1	STAINLESS STEEL WALL PANEL				

FINISH SCHEDULE NOTES

1	WALL TILE WILL EXTEND FROM FLOOR-TO-CEILING.
2	CASEWORK IN THE RESTROOMS, PLANNING ROOM AND MOTHER'S ROOM TO HAVE SS1 AS THE COUNTERTOP AND PL1 FOR THE LAMINATE CABINETRY.
3	STAINLESS STEEL WALL PANEL TO BE INSTALLED FROM TOP OF WALL BASE TO 48" AFF ON SIDE AND BACK WALLS SURROUNDING THE JANITOR'S SINK.
4	INSTALL WALL (PWT1) TILES IN A 1/3 STAGGERED BRICK PATTERN

GENERAL SHEET NOTES

A. FOR QUESTIONS REGARDING INTERIOR DESIGN DRAWINGS AND SPECIFICATIONS CONTACT: NAVFAC CONTRACTING OFFICER.

B. FINISHES INDICATED ARE THE APPROVED BASIS OF DESIGN TO CONVEY COLOR, PATTERN, TEXTURE AND SALIENT CHARACTERISTICS ONLY. THE LISTING OF MANUFACTURER INFORMATION IS NOT INTENDED TO LIMIT THE SELECTION OF PRODUCTS PROVIDED BY OTHER MANUFACTURERS. PRODUCTS MEETING THESE CRITERIA WILL BE CONSIDERED AND MUST BE REVIEWED BY THE INTERIOR DESIGNER OF RECORD (IDOR) AND THE NAVFAC INTERIOR DESIGNER AND APPROVED BY THE CONTRACTING OFFICER.

C. FINISH ITEMS ARE NOT TO BE SUBSTITUTED DUE TO ORDERING LEAD TIMES. IT IS THE CONTRACTOR'S RESPONSIBILITY TO ORDER ALL MATERIALS IN TIME TO AVOID DELAYS.

D. SPRAY PAINT ELECTRICAL PANELS, ACCESS PANELS, AND EXPANSION JOINTS TO MATCH THE ADJACENT WALL COLOR. PANELS PAINTED BY BRUSH ARE NOT ACCEPTABLE.

E. TRANSITIONS MUST MEET ABA GUIDELINES.

F. FLOOR TRANSITIONS MUST BE CENTERED UNDER DOORS.

G. INCLUDE METAL TRANSITIONS ON ALL OUTSIDE AND INSIDE CORNERS, AS WELL AS THE INTERSECTION BETWEEN THE FLOOR AND WALL TILE FOR A COMPLETE INSTALLATION IN ALL ROOMS IDENTIFIED TO RECEIVE TILE.

H. PROVIDE CORNER GUARDS (CG1) ON ALL OUTSIDE CORNERS. (DO NOT USE CORNER GUARDS ON CMU WALLS, TILED WALLS OR MANUFACTURED STONE WALLS)

I. ALIGN ALL PORCELAIN WALL TILE. CENTER TILE ON EACH WALL.

J. INSTALL METAL TOP TRIM IN ALL AREAS WITH INTEGRAL RESINOUS EPOXY WALL BASE.

K. INSTALL WALL (PWT1) TILES IN A 1/3 STAGGERED BRICK PATTERN.

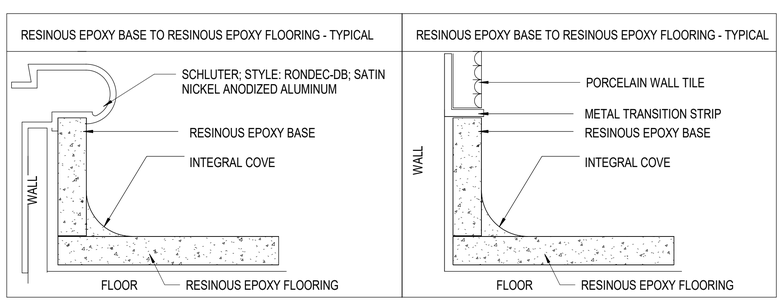

A1 WALL TRANSITIONS

SCALE: 12" = 1'-0"

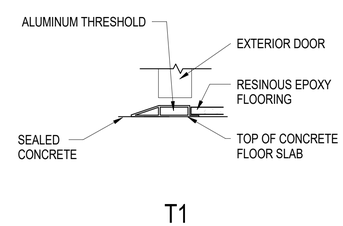

A2 THRESHOLD DETAILS

SCALE: 3" = 1'-0"

SYM	DESCRIPTION	DATE	APPR

SEAL

A/E INFO

APPROVED

FOR COMMANDER NAVFAC

ACTIVITY: Approved by LCDR VINCE DEL GRECO, ROICC with PWD YORKTOWN, via Email.

SATISFACTORY TO DATE 03/26/2026

DES LRW | DRW LRW | CHK JDW

PM/DM MME/JWW

BRANCH MANAGER DJD

CHIEF ENG/ARCH JWJ

FIRE PROTECTION HPN

DEPARTMENT OF THE NAVY
NAVAL FACILITIES ENGINEERING SYSTEMS COMMAND
MIDLANT DC CORE
NAVAL FACILITIES ENGINEERING SYSTEMS COMMAND - MID-ATLANTIC
NAVAL STATION - NORFOLK, VA
NAVAL WEAPONS STATION
YORKTOWN, VIRGINIA
P171 WEAPON MAGAZINES
SEGREGATION FACILITIES
INTERIOR FINISH SCHEDULE, LEGEND, AND DETAILS

SCALE: AS NOTED

EPROJECT NO.: 1737010

CONSTR. CONTR. NO.

NAVFAC DRAWING NO. 12942089

SHEET 419 OF 499

IN601A

DRAWFORM REVISION: 25 AUGUST 2020

3/31/2026 2:57:09 PM IN601A
C:\Users\lindsey.r.wright1\Documents\P171-1737010-I-R21-SEG_lindsey.r.wright1.rvt

FIRE ALARM LEGEND

DACT	DACT TRANSMITTER
FAA	ANNUNCIATOR PANEL
FACU	FIRE ALARM CONTROL UNIT
RTS	REMOTE TEST SWITCH
P	MANUAL FIRE ALARM PULL STATION
SS	TRANSIENT VOLT SURGE SUPPRESSOR
	CEILING SPEAKER STROBE - CANDELA SUBSCRIPT
	CEILING SPEAKER
	WALL MOUNTED SPEAKER
	WALL MOUNTED SPEAKER STROBE - CANDELA SUBSCRIPT
	WALL MOUNTED STROBE - CANDELA SUBSCRIPT
TS	TAMPER SWTICH
SS	TRANSIENT VOLT SURGE SUPPRESSOR
FS	WATER FLOW SWITCH
	FIRE ALARM BELL
	SMOKE DETECTOR
	DUCT SMOKE DETECTOR
AOM	ADDRESSABLE OUTPUT MODULE
AIM	ADDRESSABLE INPUT MODULE
LT	LOW TEMPERATURE SWITCH

DETAIL/SECTION TITLE

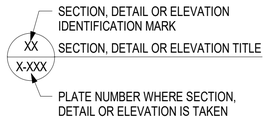

DETAIL CALLOUT SYMBOL

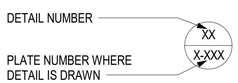

SECTION CUT SYMBOL

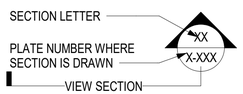

FA/MN ABBREVIATIONS

AC	ALTERNATING CURRENT
ACH	AIR CHANGES PER HOUR
AFF	ABOVE FINISHED FLOOR
AHJ	AUTHORITY HAVING JURISDICTION
AWG	AMERICAN WIRE GAGE
CD	CANDELA
CFM	CUBIC FEET PER MINUTE
DBA	DECIBEL A-WEIGHTED
FA	FIRE ALARM
FACU	FIRE ALARM CONTROL UNIT
FX	FIRE SUPPRESSION
HZ	HERTZ
IAW	IN ACCORDANCE WITH
IDC	INITIATING DEVICE CIRCUIT
NAC	NOTIFICATION APPLIANCE CIRCUIT
NEC	NATIONAL ELECTRICAL CODE
NC	NORMALLY CLOSED
NO	NORMALLY OPEN
NEMA	NATIONAL ELECTRICAL MANUFACTURERS ASSOCIATION
SPD	SURGE PROTECTION DEVICE
SLC	SIGNALING LINE CIRCUIT
TYP	TYPICAL
WP	WEATHER AND DIRECT HOSE STREAM PROOF (NEMA 4)

GENERAL FACU NOTES

A. THIS SYSTEM MUST BE A FIRE ALARM VOICE EVACUATION SYSTEM. THE FACU SYSTEM MUST NOT BE IP (INTERNET PROTOCOL) ENABLED.

B. THE FIRE ALARM VOICE EVACUATION DRAWINGS ARE SCHEMATIC IN NATURE AND SHOW A MINIMAL QUANTITY OF DEVICES. CONTRACTOR MUST DETERMINE THE FINAL QUANTITY AND LOCATION OF ALL DEVICES IN ACCORDANCE WITH THE SPECIFICATIONS, CONTRACT DRAWINGS, AND MANUFACTURER'S WRITTEN RECOMMENDATIONS TO BE COMPLIANT WITH ALL APPLICABLE CODES AND STANDARDS. ADDITIONAL DEVICES MUST BE PROVIDED FOR A FULLY FUNCTIONING FIRE ALARM SYSTEM AS REQUIRED BY NFPA 72.

C. ALL CONDUITS MUST BE CONCEALED IN WALLS, FLOOR SLABS OR CEILINGS UNLESS OTHERWISE INDICATED. EXCEPTION: CONDUIT MAY BE ALLOWED TO BE SURFACE MOUNTED ON WALLS AND CEILINGS IN UNFINISHED AREAS (105,106,113,114,115,116,117,118,119,120,121,122,123). WHERE CONDUIT FEEDS DEVICES NOT MOUNTED DIRECTLY ON THE WALL OR CEILING, THE CONDUIT MUST BE ROUTED AS A SINGLE PENDENT TYPE DROP TO EACH DEVICE.

D. ALL EXPOSED FIRE ALARM CONDUITS AND JUNCTION BOXES IN UNFINISHED AREAS MUST BE PRE-FINISHED RED FROM THE FACTORY. CONDUIT AND JUNCTION BOXES EXPOSED IN FINISHED AREAS MUST BE FINISHED TO MATCH ADJACENT FINISHES.

E. CONDUIT MUST BE SUPPORTED IN STRICT ACCORDANCE WITH THE NEC (E.G.10 FT INTERVALS AND 3 FT FROM TERMINATION). TENSION ONLY HANGERS ARE NOT PERMITTED (E.G. BATWINGS). TYPE OF CONDUIT UTILIZED MUST BE IN ACCORDANCE WITH THE ELECTRICAL SPECIFICATIONS UNLESS OTHERWISE NOTED. MAXIMUM 6 FT FLEXIBLE METAL CONDUIT IS ONLY PERMITTED FOR TERMINATION AT DEVICES MOUNTED ON PIPING OR SUBJECTED TO REMOVAL (E.G. FLOW SWITCHES, TAMPER SWITCHES, SPEAKERS AND STROBES MOUNTED IN REMOVABLE CEILINGS).

F. CONDUCTORS MUST BE RUN FROM DEVICE TO DEVICE WITHOUT SPLICES. WIRE NUTS MUST BE PROHIBITED. TERMINAL STRIPS MUST BE UTILIZED WHERE CONDUCTORS CANNOT BE DIRECTLY TERMINATED AT THE DEVICE (E.G. PIGTAILS OFF A HEAT DETECTOR).

G. FIRE ALARM EQUIPMENT PANELS MUST NOT BE USED AS RACEWAY FOR ROUTING POWER WIRING OR LOW VOLTAGE WIRING. ONLY WIRING TERMINATING WITH THE PANEL MUST BE ROUTED INTO THE PANEL. POWER WIRING AND POWER LIMITED WIRING MUST BE SEPARATED BY A MINIMUM OF TWO INCHES WITHIN THE EQUIPMENT PANELS.

H. MOUNTING DEVICES IN THE FACU/ACU, FSCP, SNAC BOOSTER PANELS, AMP BOOSTER PANELS, AND TRANSCEIVER PANELS WHICH ARE NOT UL LISTED AS PART OF THE PANEL IS PROHIBITED.

I. ALL POWER SUPPLIES TO FACU/ACU, FSCP, SNAC BOOSTER PANELS, AMP BOOSTER PANELS, AND TRANSCEIVER PANELS MUST BE PROVIDED WITH SPD. ALL SLC, NAC, OR IDC CIRCUITS ENTERING OR LEAVING THE BUILDING MUST BE PROVIDED WITH SPD. EXCEPTION: CIRCUITS TO DEVICES MOUNTED DIRECTLY ON THE EXTERIOR OF THE BUILDING DO NOT REQUIRE SPD (E.G. EXTERIOR NOTIFICATION APPLIANCE). SPD MUST BE MOUNTED IN A SEPARATE ENCLOSURE.

SYM	DESCRIPTION	DATE	APPR

SEAL

A/E INFO

APPROVED

FOR COMMANDER NAVFAC

ACTIVITY

SATISFACTORY TO DATE

DES KEK | DRW DMH | CHK SSR

PM/DM MMP/SLC

BRANCH MANAGER CGM

CHIEF ENG/ARCH JWJ

FIRE PROTECTION HPN

DEPARTMENT OF THE NAVY
NAVAL FACILITIES ENGINEERING SYSTEMS COMMAND
MIDLANT DC CORE
NAVAL FACILITIES ENGINEERING SYSTEMS COMMAND - MID-ATLANTIC
NAVAL STATION - NORFOLK, VA
NAVAL WEAPONS STATION
YORKTOWN, VIRGINIA
P171 WEAPON MAGAZINES
SEGREGATION FACILITIES
FIRE ALARM SYMBOLS, LEGEND, ABBREVIATIONS AND NOTES

SCALE: AS NOTED

EPROJECT NO.: 1737010

CONSTR. CONTR. NO.

NAVFAC DRAWING NO. 12942092

SHEET 420 OF 499

FA001A

DRAWFORM REVISION: 25 AUGUST 2020

3/30/2026 11:24:31 AM FA001A
C:\Users\david.haddock\Documents\P1711-1737010-F-R21-SEG_david.haddock.rvt

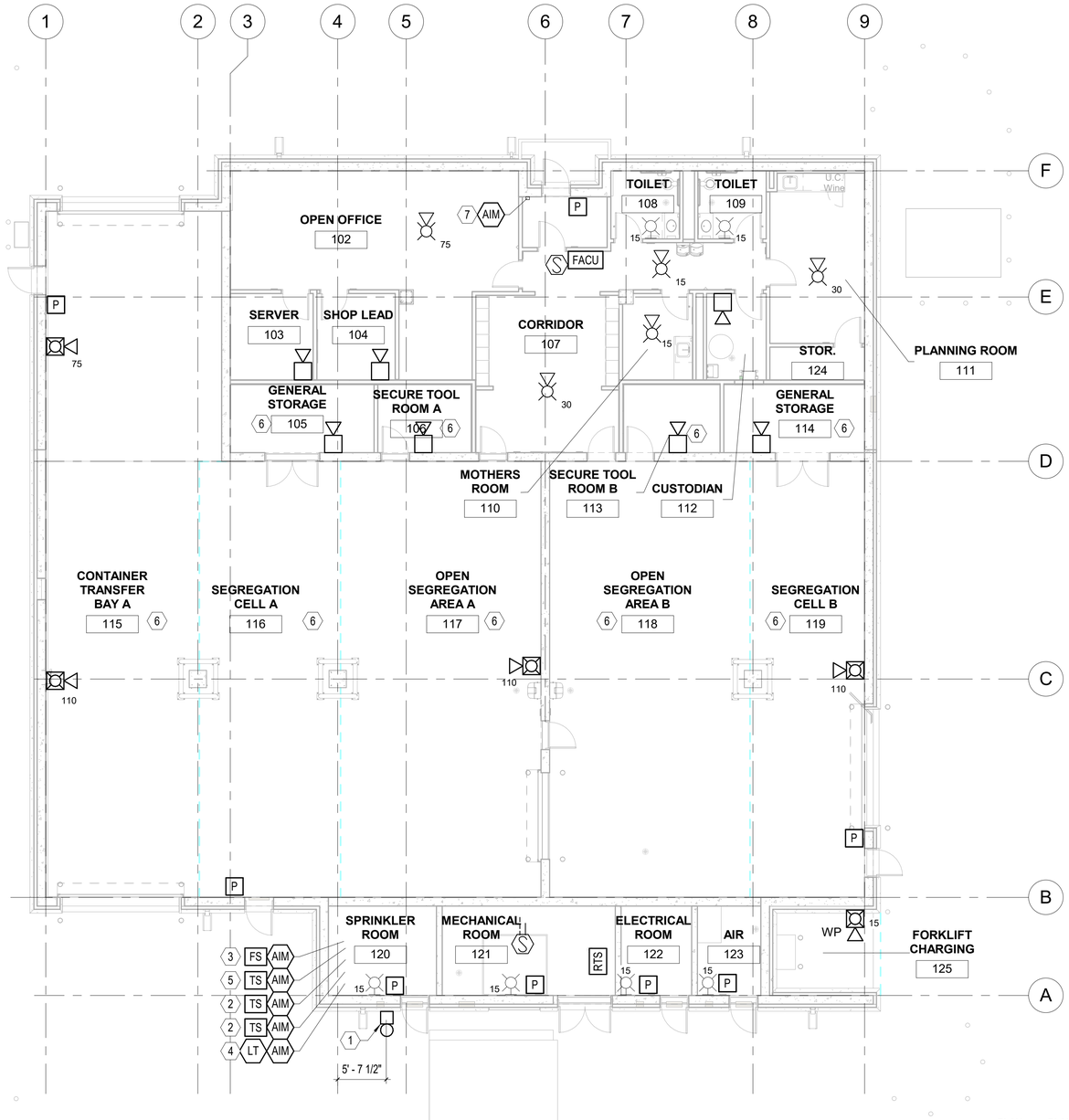

A1 FLOOR PLAN - FIRE ALARM

1/8" = 1'-0"

PLAN NORTH BLDG 1 | PLAN NORTH BLDG 2

GENERAL NOTES

A. FOR FIRE ALARM SYSTEM GENERAL NOTES, ABBREVIATIONS, SYMBOL LEGEND SEE FA001A.

B. FOR FIRE ALARM RISER DIAGRAM, INSTALLATION DETAILS AND OPERATIONS MATRIX SEE FA401A.

KEY NOTES

1. EXTERIOR WEATHER-PROOF FIRE SPRINKLER ALARM BELL MOUNTED 11' - 0" ABOVE GROUND FLOOR TOS
2. PROVIDE BACKFLOW ASSEMBLY TAMPER SWITCH MONITORING
3. PROVIDE FLOW SWITCH MONITOR MODULE FOR SPRINKLER WATER FLOW ALARM
4. PROVIDE LOW TEMPERATURE SWITCH FOR SPRINKLER RISER ROOM
5. PROVIDE SPRINKLER RISER CONTROL VALVE TAMPER SWITCH MONITORING
6. PROVIDE CLASS II DIVISION 1, DUST-PROOF DEVICES AND BACKBOXES WITHIN THE HAZARDOUS SEGREGATION WORK AREAS
7. PROVIDE KNOXBOX MOUNTED 5 FEET AFF

GRAPHIC SCALE

1/8" = 1' - 0" 0 5' 10' 15' 30'

SYM	DESCRIPTION	DATE	APPR

SEAL

A/E INFO

APPROVED

FOR COMMANDER NAVFAC

ACTIVITY

SATISFACTORY TO DATE

DES KEK DRW DMH CHK SSR

PM/DM MMP/SLC

BRANCH MANAGER CGM

CHIEF ENG/ARCH JWJ

FIRE PROTECTION HPN

DEPARTMENT OF THE NAVY
NAVAL FACILITIES ENGINEERING SYSTEMS COMMAND
MID-ATLANTIC DC CORE
NAVAL FACILITIES ENGINEERING SYSTEMS COMMAND - MID-ATLANTIC
NAVAL STATION - NORFOLK, VA
NAVAL WEAPONS STATION
YORKTOWN, VIRGINIA
P171 WEAPON MAGAZINES
SEGREGATION FACILITIES
FLOOR PLAN - FIRE ALARM

SCALE: AS NOTED

EPROJECT NO.: 1737010

CONSTR. CONTR. NO.

NAVFAC DRAWING NO. 12942093

SHEET 421 OF 499

FA101A

DRAWFORM REVISION: 25 AUGUST 2020

3/30/2026 11:24:31 AM FA101A
C:\Users\david.haddock\Documents\P171-1737010-F-R21-SEG_david.haddock.rvt

	ANNUNCIATION AT LOCAL PANEL			NOTIFICATION			OFF-SITE MONITORING			AUXILIARY		
ALARM CONDITIONS	AUDIO-VISUAL FIRE ALARM INDICATION BY DEVICE	AUDIO-VISUAL TROUBLE INDICATION BY DEVICE	AUDIO-VISUAL SUPERVISORY INDICATION BY DEVICE	FIRE ALARM ANNOUNCEMENT	"FIRE" VISUAL NOTIFICATION STROBES	ACTIVATE EXTERIOR SPRINKLER WATERFLOW ALARM BELL	TRANSMIT "FIRE ALARM" SIGNAL TO RDC	TRANSMIT "SUPERVISORY" SIGNAL TO RDC	TRANSMIT "TROUBLE" SIGNAL TO RDC	SHUT DOWN ASSOCIATED AIR HANDLING EQUIPMENT		SEND SIGNAL TO LIGHTING CONTROL SYSTEM TO OVERRIDE OCCUPANCY SENSORS AND TURN LIGHTS ON
MANUAL FIRE ALARM STATIONS	X			X	X		X					X
SPOT-TYPE SMOKE DETECTORS	X			X	X		X					X
FLOW SWITCHES - GENERAL	X			X	X	X	X					X
TROUBLE CONDITIONS												
AC POWER FAILURE		X							X			
LOW BATTERY		X							X			
OPEN CIRCUIT FAULT		X							X			
GROUND FAULT		X							X			
NOTIFICATION APPLIANCE CIRCUIT SHORT		X							X			
COMPONENT COMMON TROUBLE		X							X			
FIRE ALARM VOICE EVACUATION CONTROL PANEL (FACU) TROUBLE		X							X			
FIRE ALARM DACT COMMON TROUBLE		X							X			
SUPERVISORY CONDITIONS												
IN-DUCT SMOKE DETECTORS AT AHU OR DOAS SUPPLY OR RETURN			X					X		X		
COMPONENT COMMON SUPERVISORY			X					X				
FIRE ALARM VOICE EVACUATION CONTROL PANEL (FACU) SUPERVISORY			X					X				
SPRINKLER CONTROL VALVE TAMPER SWITCH			X					X				
SPRINKLER RISER ROOM LOW TEMPERATURE			X					X				

B1 FIRE ALARM VOICE EVACUATION SYSTEM MATRIX

12" = 1'-0"

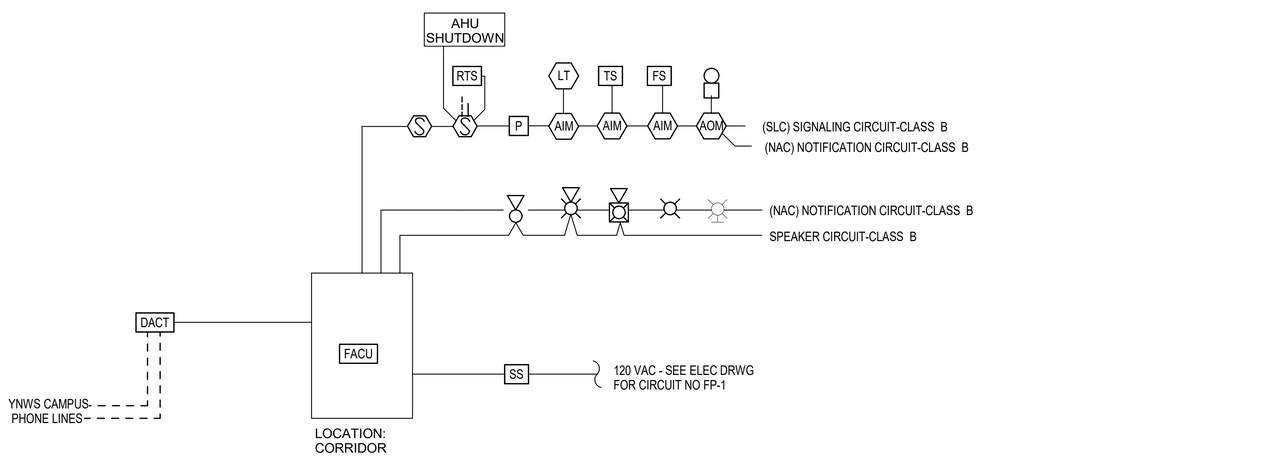

A1 FIRE ALARM RISER DIAGRAM

NOT TO SCALE

GENERAL NOTES

A. FOR FIRE ALARM SYSTEM GENERAL NOTES, ABBREVIATIONS, SYMBOLS LEGEND SEE FA001A.

B. FOR FIRE ALARM DEVICE LAYOUT SEE FA101A.

SYM	DESCRIPTION	DATE	APPR

NAVFAC

SEAL

A/E INFO

APPROVED

FOR COMMANDER NAVFAC

ACTIVITY

SATISFACTORY TO DATE

DES KEK DRW DMH CHK SSR

PM/DM MMP/SLC

BRANCH MANAGER CGM

CHIEF ENG/ARCH JWJ

FIRE PROTECTION HPN

DEPARTMENT OF THE NAVY
NAVAL FACILITIES ENGINEERING SYSTEMS COMMAND
MID-ATLANTIC
MID-LANT DC CORE

NAVAL FACILITIES ENGINEERING SYSTEMS COMMAND - MID-ATLANTIC
NAVAL STATION - NORFOLK, VA

NAVAL WEAPONS STATION
YORKTOWN, VIRGINIA

P171 WEAPON MAGAZINES
SEGREGATION FACILITIES

FIRE ALARM RISER AND MATRIX

SCALE: AS NOTED

EPROJECT NO.: 1737010

CONSTR. CONTR. NO.

NAVFAC DRAWING NO.
12942094

SHEET 422 OF 499

FA401A

DRAWFORM REVISION: 25 AUGUST 2020

3/30/2026 11:24:31 AM FA401A
C:\Users\david.haddock\Documents\P171-1737010-F-R21-SEG_david.haddock.rvt

FIRE SUPPRESSION LEGEND

- FIRE DEPARTMENT CONNECTION - SIAMESE
- TEST HEADER
- LH — LIGHT HAZARD GROUP
- OH — ORDINARY HAZARD GROUP
- EH — EXTRA HAZARD GROUP
- TS — TAMPER SWITCH
- FS — WATER FLOW SWITCH

PIPING LEGEND

- OUTSIDE SCREW AND YOKE VALVE (OS&Y)
- RPZ — BACKFLOW PREVENTER - REDUCED PRESSURE ZONE

FX ABBREVIATIONS

AFF	ABOVE FINISHED FLOOR
AHJ	AUTHORITY HAVING JURISDICTION
AS	AUTOMATIC SPRINKLER
CA	CLEAN AGENT
FHV	FIRE HOSE VALVE
FP	FIRE PROTECTION
FM	FIRE MAIN
NC	NORMALLY CLOSED
NO	NORMALLY OPEN
RN	RISER NIPPLE
(S)	ELECTRICALLY SUPERVISED
SPR	SPRINKLER PIPE
SF	SQUARE FOOT
TYP	TYPICAL

FIRE SUPPRESSION DESIGN CRITERIA

1. THE FIRE SUPPRESSION SYSTEM MUST BE SERVED FROM THE EXISTING FACILITY WATER DISTRIBUTION SYSTEM. CONTRACTOR MUST PERFORM A HYDRANT FLOW TEST, AND INCORPORATE THIS TEST INTO THE HYDRAULIC CALCULATIONS. HYDRANT FLOW TESTING MUST BE IN ACCORDANCE WITH NFPA 291, AND THE RESULTS OF THE TESTING MUST BE SUBMITTED AS INDICATED IN NFPA 291 FIGURE 4.11.2.5.
2. FIRE SUPPRESSION SYSTEM CALCULATIONS MUST BE BASED ON A SINGLE CONNECTION TO THE BASE DOMESTIC WATER SYSTEM.
3. HYDRAULIC CALCULATIONS MUST INCLUDE A MINIMUM 12PSI FRICTION LOSS FOR BACKFLOW ASSEMBLY OR THE ACTUAL PSI LOSS THROUGH THE DEVICE WHICHEVER IS GREATER.
4. THE FIRE SUPPRESSION SYSTEM MUST BE DESIGNED AND INSTALLED BY A LICENSED / CERTIFIED COMPANY WHERE EMPLOYEES ARE LICENSED / CERTIFIED TO INSTALL FIRE PROTECTION EQUIPMENT.
5. ALL COMPONENTS AND ASSEMBLIES USED IN THIS FIRE PROTECTION SYSTEM MUST BE SPECIFICALLY UL LISTED OR FM APPROVED FOR THEIR INTENDED USE.
6. PIPING MATERIAL PRIOR TO THE BACKFLOW PREVENTER MUST BE SUITABLE FOR USE IN POTABLE WATER SYSTEMS IN COMPLIANCE WITH THE INTERNATIONAL PLUMBING CODE & LOCAL JURISDICTION.
7. PROVIDE SEISMIC RESTRAINTS FOR ALL SPRINKLER PIPING COMPONENTS IN ACCORDANCE WITH NFPA 13 CRITERIA.
8. FOR INFORMATION ONLY: FLOW TEST FOR BOTH SEG BLDG SITES

DATE	3/5/2021
LOCATION	FH 2189
STATIC	59 PSI
FLOWRESIDUAL	55 PSI
LOCATION :	FH 2187
FLOWING:	1920 GPM

FIRE SUPPRESSION GENERAL NOTES

A. PROVIDE ALL NECESSARY COMPONENTS FOR A WET-PIPE SYSTEM IN ALL AREAS INDICATED. AT A MINIMUM PROVIDE COMPONENTS AS INDICATED ON THESE DRAWINGS. CONTRACTOR MUST PROVIDE ADDITIONAL COMPONENTS AND MODIFICATIONS AS REQUIRED TO PROVIDE A FULLY FUNCTIONING FIRE SUPPRESSION SYSTEM.

B. ALL SYSTEMS WHICH REQUIRE COORDINATION BETWEEN TRADES MUST BE TO THE SATISFACTION OF THE ENGINEER AND AUTHORITY HAVING JURISDICTION. ANY DEFICIENCIES, INCONSISTENCIES, OR POORLY COORDINATED INSTALLATIONS MUST BE CORRECTED BY THE CONTRACTOR AT NO ADDITIONAL COST.

C. FINAL DESIGN REQUIREMENTS (DEVICE QUANTITY, SIZE, AND LOCATIONS) ARE THE SOLE RESPONSIBILITY OF THE FIRE SUPRESSION CONTRACTOR. DRAWINGS INDICATE MINIMUM REQUIREMENTS; THE FIRE SUPPRESSION CONTRACTOR WILL BE RESPONSIBLE FOR VERIFYING AND COORDINATING FINAL DESIGN REQUIREMENTS WITH THESE CONSTRUCTION DOCUMENTS, SPECIFICATIONS, REFERENCE DOCUMENTS, APPLICABLE CODES, AND FACILITY USER REQUIREMENTS.

D. ALL DRAIN PENETRATIONS THROUGH EXTERIOR WALL MUST BE NO GREATER THAN 2'-0" ABOVE FINISHED GRADE AND PROVIDED WITH SPLASH BLOCK.

WATER FLOW TEST MAP

12/23/2020, 6:58:47 AM

Water Hydrant

Water Line

- Main, Non-Coded
- Main, Abandoned
- Main, In Service

P171 - Fire Flow Test - January 14, 2021

FH2189 - Gage - Static 59 psi - Residual 55 psi

FH2187 - Flow 1920 gpm

Test By : A. Chacinski - Jensen Hughes
Witnessed by : K Kimmel - NAVFAC MIDLANT Ctr

FIRE PROTECTION SPRINKLER SYSTEM DESIGN CRITERIA

MARK	HAZARD CLASSIFICATION	SYSTEM TYPE	DENSITY GPM/SF	REMOTE AREA SQ FT	MAXIMUM AREA PER SPRINKLER SQ FT	HOSE DEMAND GPM	SPRINKLER CHARACTERISTICS				ADDITIONAL CODE REFERENCE	NOTES
							TEMP RATING	TYPE	K-FACTOR	FINISH		
	LIGHT HAZARD	WET	0.10	1500	225	250	ORDINARY	SEE NOTES	5.6 OR 8.0	SEE NOTES		1,2,3
	ORDINARY HAZARD	WET	0.20	2500	130	250	ORDINARY	SEE NOTES	8.0	SEE NOTES		1,2,3
	EXTRA HAZARD	WET	0.30	2500	100	500	200	STANDARD RESPONSE BRASS UPRIGHT	11.2	BRASS	NFPA 13, TABLE 13.2.1	

NOTE 1: PROVIDE 200ºF RATED SPRINKLERS IN MECHANICAL AND COMMUNICATION ROOMS, AND HIGHER TEMPERATURES WHERE REQUIRED BY NFPA 13.
NOTE 2: WHERE CEILINGS ARE NOT PROVIDED, USE QUICK RESPONSE BRASS UPRIGHT SPRINKLERS.
NOTE 3: WHERE CEILINGS ARE PRESENT, USE WHITE QUICK-RESPONSE RECESSED SPRINKLERS.

SYM	DESCRIPTION	DATE	APPR

NAVFAC

SEAL

A/E INFO

APPROVED

FOR COMMANDER NAVFAC

ACTIVITY

SATISFACTORY TO DATE

DES KEK | DRW DMH | CHK SSR
PM/DM MMP/SLC
BRANCH MANAGER CGM
CHIEF ENG/ARCH JWJ
FIRE PROTECTION HPN

DEPARTMENT OF THE NAVY
NAVAL FACILITIES ENGINEERING SYSTEMS COMMAND
MIDLANT DC CORE
NAVAL FACILITIES ENGINEERING SYSTEMS COMMAND - MID-ATLANTIC
NAVAL STATION - NORFOLK, VA
NAVAL WEAPONS STATION YORKTOWN, VIRGINIA
P171 WEAPON MAGAZINES
SEGREGATION FACILITIES
FIRE SUPPRESSION SYMBOLS, LEGEND, ABBREVIATIONS AND NOTES

SCALE: AS NOTED
EPROJECT NO.: 1737010
CONSTR. CONTR. NO.
NAVFAC DRAWING NO. 12942095
SHEET 423 OF 499
FX001A

DRAWFORM REVISION: 25 AUGUST 2020

3/30/2026 11:24:31 AM FX001A
C:\Users\david.haddock\Documents\P171-1737010-F-R21-SEG_david.haddock.rvt

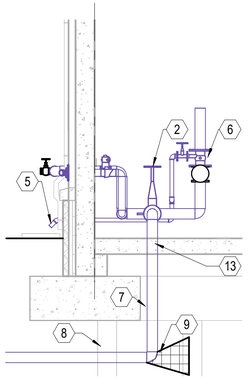

B1 FIRE SERVICE ENTRANCE AND RISER

1/4" = 1'-0"

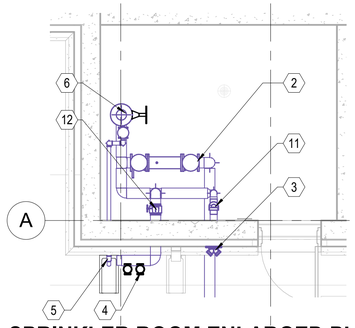

A1 SPRINKLER ROOM ENLARGED PLAN

1/4" = 1'-0"

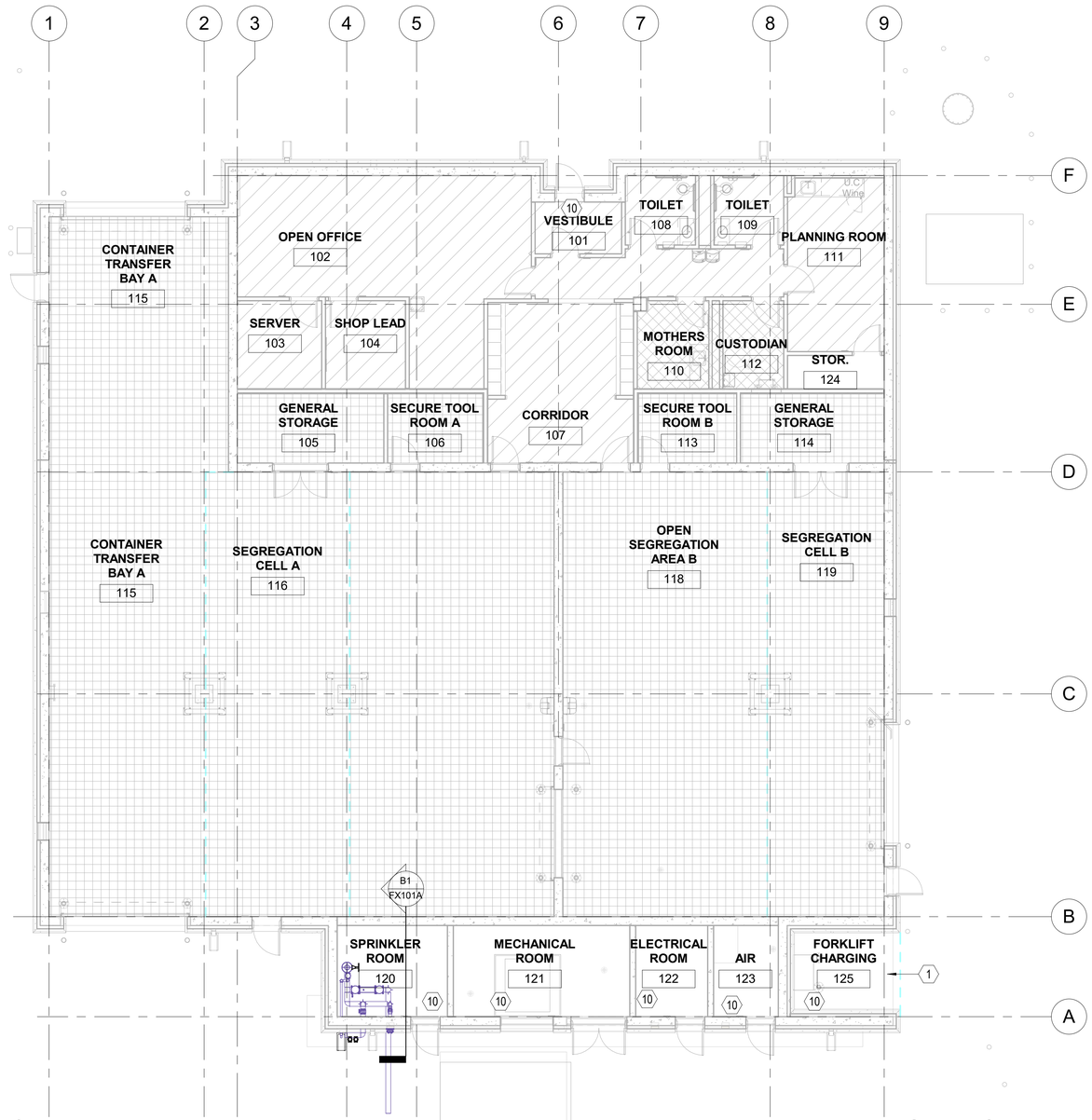

A2 FLOOR PLAN - FIRE SUPPRESSION

1/8" = 1'-0"

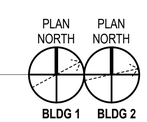

GENERAL NOTES

A. FOR FIRE SUPPRESSION SYSTEM GENERAL NOTES, ABBREVIATIONS, SYMBOLS LEGEND SEE FX001A

KEY NOTES

1 PROVIDE ORDINARY DRY SIDE WALL SPRINKLER COVERAGE IN THIS AREA
2 PROVIDE REDUCED PRESSURE BACKFLOW ASSEMBLY
3 PROVIDE SIAMESE FIRE DEPARTMENT CONNECTION WITH INTERIOR 4 INCH CHECK VALVE
4 PROVIDE BACKFLOW FORWARD FLOW TEST ASSEMBLY - PROVIDE ONE 2 1/2 INCH HOSE VALVE PER REQUIRED 250 GPM SPRINKLER DEMAND
5 PROVIDE 2 INCH MAIN TEST DRAIN DISCHARGE TO BLDG EXTERIOR WITH SPLASHBLOCK
6 PROVIDE VERTICAL SPRINKLER CHECK VALVE ASSEMBLY WITH 2 INCH DRAIN , PRESSURE GAUGES AND FLOW SWITCH
7 MAINTAIN 1 INCH MINIMUM CLEARANCE FROM EDGE OF FOOTING
8 MAINTAIN 12 INCH MINIMUM CLEARANCE BELOW BOTTOM OF FOOTING
9 PROVIDE THRUST BLOCK AND/OR PIPING RESTRAINTS IN ACCORDANCE WITH NFPA 24
10 PROVIDE CORROSION RESISTANT SPRINKLERS WITHIN THIS AREA
11 PROVIDE INTERIOR 4 INCH CHECK VALVE
12 PROVIDE INTERIOR TEST HEADER ISOLATION VALVE
13 PROVIDE PIPE SLEEVE THROUGH FLOOR WITH WATER TIGHT SEAL.

GRAPHIC SCALE

1/8" = 1' - 0" 0 5' 10' 15' 30'

1/4" = 1' - 0" 0 1' 5' 10' 15'

SYM	DESCRIPTION	DATE	APPR

SEAL

A/E INFO

APPROVED

FOR COMMANDER NAVFAC

ACTIVITY

SATISFACTORY TO DATE

DES KEK DRW DMH CHK SSR

PM/DM MMP/SLC

BRANCH MANAGER CGM

CHIEF ENG/ARCH JWJ

FIRE PROTECTION HPN

DEPARTMENT OF THE NAVY
NAVAL FACILITIES ENGINEERING SYSTEMS COMMAND
MIDLANT DC CORE

NAVAL FACILITIES ENGINEERING SYSTEMS COMMAND - MID-ATLANTIC
NAVAL STATION - NORFOLK, VA

NAVAL WEAPONS STATION YORKTOWN, VIRGINIA
P171 WEAPON MAGAZINES
SEGREGATION FACILITIES

FLOOR PLAN - FIRE SUPPRESSION

SCALE: AS NOTED

EPROJECT NO.: 1737010

CONSTR. CONTR. NO.

NAVFAC DRAWING NO. 12942096

SHEET 424 OF 499

FX101A

DRAWFORM REVISION: 25 AUGUST 2020

3/30/2026 11:24:32 AM FX101A
C:\Users\david.haddock\Documents\P171-1737010-F-R21-SEG_david.haddock.rvt

PLUMBING LEGEND

- THIN LINE WEIGHT INDICATES EXISTING ITEM TO REMAIN
- HEAVY LINE WEIGHT INDICATES NEW WORK TO BE PROVIDED
- HEAVY DASHED LINE WEIGHT INDICATES EXISTING ITEM TO REMOVE, REFER TO DEMOLITION NOTES
- 1 / M-301 — SECTION/ELEVATION CUT
- 1 / M-401 — PARTIAL PLAN/DETAIL SYMBOL
- 1 — PLAN REFERENCE NOTE
- 100 — ROOM NUMBER
- EQUIPMENT W/ CLEARANCE
- POINT OF DISCONNECTION
- POINT OF CONNECTION
- 1 — REVISION SYMBOL
- CA — COMPRESSED AIR
- DOMESTIC COLD WATER
- DOMESTIC HOT WATER
- DOMESTIC HOT WATER RETURN
- S — SANITARY
- V — VENT
- DOWNWARD SLOPE
- AUTOMATIC AIR VENT
- AUTOMATIC BALANCING VALVE
- BUTTERFLY VALVE
- CHECK VALVE
- DRAIN VALVE
- GATE VALVE
- GLOBE VALVE
- ISOLATION VALVE
- MANUAL AIR VENT
- MANUAL BALANCING VALVE
- MANUAL FLOW CONTROL BALANCING VALVE
- PIPE CAP
- PIPE DOWN
- SUCTION REDUCER
- PIPE UP
- PRESSURE GAUGE WITH SHUTOFF COCK
- PRESSURE REDUCING VALVE
- RELIEF VALVE
- SOLENOID VALVE
- SQAURE HEAD BALANCING VALVE
- STRAINER
- TEMPERATURE PRESSURE RELIEF VALVE
- UNION
- WALL CLEAN OUT
- ECCENTRIC REDUCER
- FLANGE
- WYE STRAINER

PLUMBING FIXTURES

- BACKFLOW PREVENTER
- HOSE BIB / HYDRANT
- WCO
- COTG
- FCO
- FLOOR DRAIN
- W — WATER METER
- INLINE PUMP
- WATER PUMP

PLUMBING ABBREVIATIONS

AAV	AIR ADMITTANCE VALVE
ABA	ARCHITECTURAL BARRIERS ACT
AC	ABOVE CEILING
ADA	AMERICANS WITH DISABILITIES ACT
AFF	ABOVE FINISHED FLOOR
AFG	ABOVE FINISHED GRADE
AP	ACCESS PANEL
BF	BELOW FLOOR
BFP	BACKFLOW PREVENTER
BG	BELOW GRADE
BPA	BACKFLOW PREVENTION ASSEMBLY
BTUH	BRITISH THERMAL UNIT PER HOUR
CLG	CEILING
CO	CLEANOUT
CONC	CONCRETE
COTG	CLEANOUT TO GRADE
CW	DOMESTIC COLD WATER
DN	DRAWING
DR	DRYER
DWT	DOMESTIC WATER TANK
DWV	DRAIN, WASTE, VENT
EA	EACH
EFF	EFFICENCY
ELEV	ELEVATION
EQUIP	EQUIPMENT
ET	EXPANSION TANK
ETR	EXISTING TO REMAIN
EWC	ELECTRIC WATER COOLER
F	FAHRENHEIT
FCO	FLOOR CLEANOUT
FD	FLOOR DRAIN
FLA	FULL LOAD AMPS
FT	FEET
FV	FLUSH VALVE
G	NATURAL GAS
GAL	GALLON
GFCI	GOVERNMENT FURNISHED, CONTRACTOR INSTALLED
GPH	GALLONS PER HOUR
GPM	GALLONS PER MINUTE
HB	HOSE BIB
HP	HORSEPOWER
HW	DOMESTIC HOT WATER
HWH	HOT WATER HEATER
HWR	DOMESTIC HOT WATER RECIRC
IM	ICE MAKER
KS	KITCHEN SINK
LAV	LAVATORY
LS	LAUNDRY SINK
MAX	MAXIMUM
MIN	MINIMUM
MRU	MIXING RECIRCULATION UNIT
MS	MOP SINK
MV	MIXING VALVE
NP	NOT PROVIDED
OD	OVERFLOW DRAIN
P	PUMP
PH	PHASE
PSI	POUNDS PER SQUARE INCH
RD	ROOF DRAIN
REF	REFRIGERATOR
RL	ROOF LEADER
RPM	REVOLUTIONS PER MINUTE
SAN	SANITARY
SH	SHOWER
SIM	SIMILAR
SS	SERVICE SINK
TYP	TYPICAL
U.O.N.	UNLESS OTHERWISE NOTED
UR	URINAL
V	VENT
VS	VENT STACK
VTR	VENT THRU ROOF
W	WASTE
WC	WATER CLOSET
WCO	WALL CLEANOUT
WHA	WATER HAMMER ARRESTOR
WS	WASTE STACK
WSHR	WASHING MACHINE
°	DEGREES
Ø	DIAMETER

GENERAL PLUMBING NOTES

A PROVIDE ALL MATERIALS AND EQUIPMENT AND PERFORM ALL LABOR REQUIRED TO INSTALL COMPLETE AND OPERABLE PLUMBING SYSTEMS AS INDICATED ON THE DRAWINGS, SPECIFIED AND AS REQUIRED BY CODE.

B GENERAL NOTES ON THIS DRAWING ARE APPLICABLE TO EACH PLUMBING DRAWING OF THIS SET. GENERAL NOTES SPECIFIC TO INDIVIDUAL PLUMBING DRAWINGS WILL BE SHOWN ON THE RESPECTIVE PLUMBING DRAWING.

C MECHANICAL EQUIPMENT, APPURTENANCES, PIPING, AND DUCTWORK MATERIALS AND CONSTRUCTION LOCATED EXTERIOR TO THE BUILDING, WHERE IT PASSES THROUGH THE BUILDING ENVELOPE, AND IN THE FOLLOWING LIST OF SPACES MUST COMPLY WITH EXTERIOR EXPOSURE REQUIREMENTS ESC = C4. ACCEPTABLE MATERIALS; GALVANIZED STEEL OR STAINLESS STEEL WITH HIGH PERFORMANCE COATING. 120 SPINKLER ROOM, 121 MECHANICAL ROOM, 122 ELECTRICAL ROOM AND 123 AIR COMPRESSOR.

D COORDINATE WITH ARCHITECTURAL DRAWINGS PRIOR TO ROUGHING-IN PLUMBING FIXTURES. FIXTURES MUST BE LOCATED AS DETAILED ON THE ARCHITECTURAL DRAWINGS.

E THE CONTRACTOR MUST COORDINATE HIS WORK WITH OTHER TRADES PRIOR TO FABRICATION AND INSTALLATION TO PREVENT CONFLICTS. NOTIFY CONTRACTING OFFICER WHERE CONFLICTS ARE DISCOVERED PRIOR TO CONSTRUCTION AND BEFORE BEGINNING WORK IN THOSE AREAS. ALL CONFLICTS THAT ARISE DUE TO LACK OF COORDINATION SHALL BE RECTIFIED BY THE CONTRACTOR AT NO COST TO THE GOVERNMENT.

F INSTALL ALL EQUIPMENT IN STRICT ACCORDANCE WITH MANUFACTURER'S INSTRUCTIONS.

G SLOPES AND INVERT ELEVATIONS OF ALL INTERIOR PIPING MUST BE ESTABLISHED BEFORE ANY PIPING IS INSTALLED, IN ORDER THAT PROPER SLOPES WILL BE MAINTAINED. ALL PIPING MUST BE RUN TO AVOID CONFLICT WITH OTHER TRADES.

H LAYOUT OF PIPING IS DIAGRAMMATIC. RUN ALL PIPING CONCEALED ABOVE CEILING OR IN WALLS OR CHASES UNLESS OTHERWISE NOTED. RUN ALL EXPOSED PIPING, AS NOTED, HIGH AS POSSIBLE, UNLESS OTHERWISE NOTED. ALLOW FOR RISES, DROPS, AND OFFSETS AS REQUIRED.

I MAKE PROPER HOT AND COLD WATER, HOT WATER RECIRCULATING, WASTE, AND VENT, ETC PIPING CONNECTIONS TO ALL FIXTURES AND EQUIPMENT EVEN THOUGH ALL BRANCHES, FITTINGS AND CONNECTIONS MAY NOT BE SHOWN.

J PROVIDE ALL PLUMBING FIXTURES AND EQUIPMENT WITH ACCESSIBLE STOPS.

K ALL CLEANOUT MUST BE FULL SIZE OF PIPE.

L PLASTIC PIPE MUST NOT BE INSTALLED IN RETURN AIR PLENUMS.

M WHERE APPLICABLE, MATERIALS AND EQUIPMENT SHALL HAVE STAMPS OR SEALS OF AHRI, ASME, UL, OR ASTM. THE CONTRACTOR MUST MAKE TESTS FOR ACCEPTANCE AND APPROVAL BY CODE AND THE REQUIREMENTS OF APPLICABLE REGULATORY AGENCIES.

SYM	DESCRIPTION	DATE	APPR

SEAL

A/E INFO

APPROVED

FOR COMMANDER NAVFAC

ACTIVITY: Approved by LCDR VINCE DEL GRECO, ROICC with PWD YORKTOWN, via Email,

SATISFACTORY TO DATE 03/26/2026

DES RMD | DRW RZL | CHK FCF

PM/DM MME/JWW

BRANCH MANAGER ALG

CHIEF ENG/ARCH JWJ

FIRE PROTECTION HPN

DEPARTMENT OF THE NAVY
NAVAL FACILITIES ENGINEERING SYSTEMS COMMAND
MIDLANT PDC CORE
NAVAL FACILITIES ENGINEERING SYSTEMS COMMAND - MID-ATLANTIC
NAVAL STATION - NORFOLK, VA
NAVAL WEAPONS STATION YORKTOWN, VIRGINIA
P171 WEAPON MAGAZINES SEGREGATION FACILITIES
PLUMBING LEGEND, ABBREVIATIONS AND NOTES

SCALE: AS NOTED

EPROJECT NO.: 1737010

CONSTR. CONTR. NO.

NAVFAC DRAWING NO. 12942099

SHEET 425 OF 499

P-001A

DRAWFORM REVISION: 25 AUGUST 2020

4/6/2026 1:09:54 PM P-001A
C:\Users\rachael.duke\Documents\P171-1737010-M-R21-SEG_rachael.duke.rvt

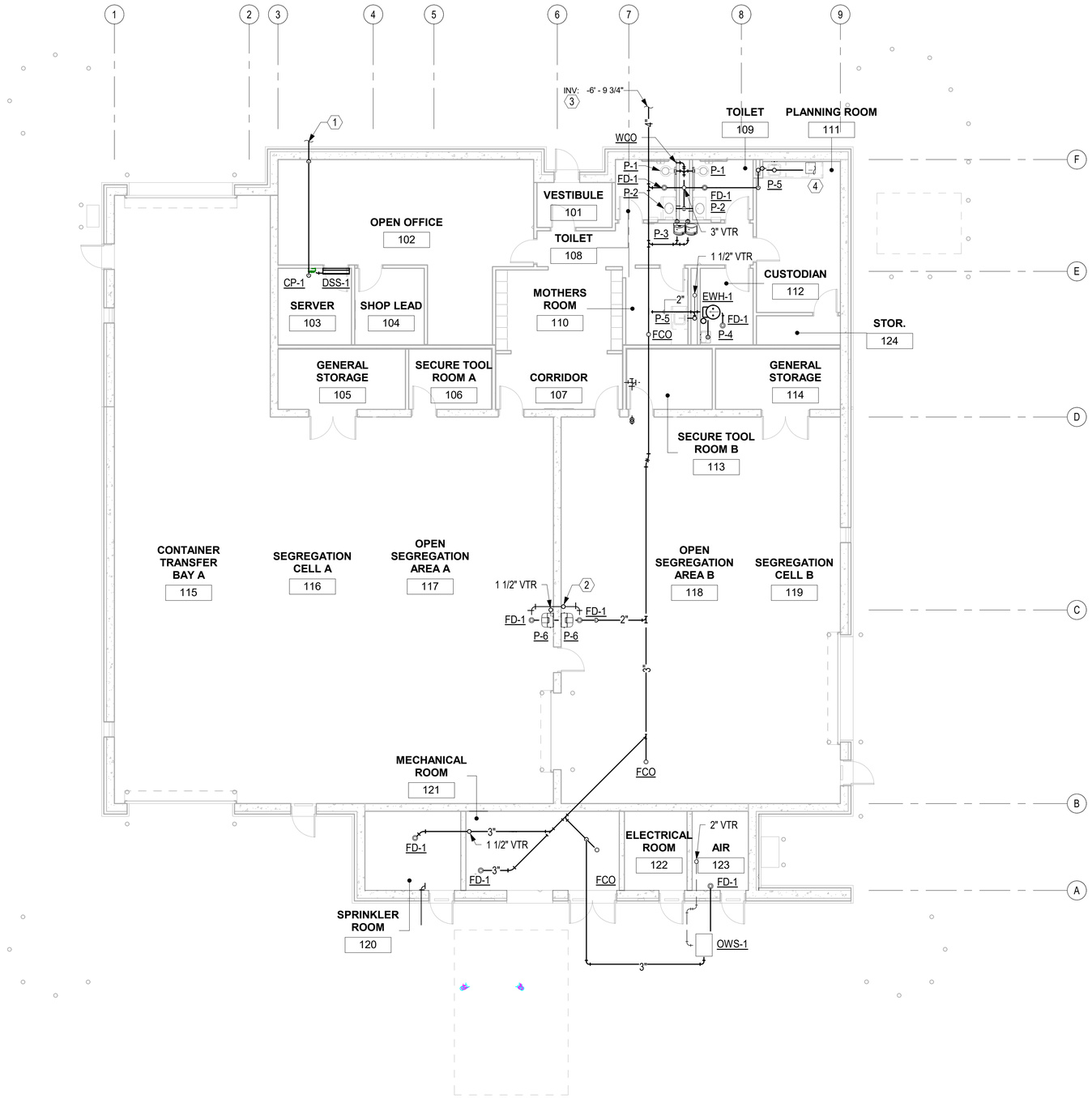

FLOOR PLAN - SANITARY

SCALE: 1/8" = 1'-0"

PLAN NORTH BLDG 1 | PLAN NORTH BLDG 2

KEYNOTES

1. DRAIN LINES SPIILL OUT ON CONCRETE SPLASH PAD.
2. PIPING FROM TRAP PRIMER (1/2")
3. INVERT IS MEASURED AT 5'-0" FROM FACE OF BUILDING.
4. SANITARY LINE TO UNDERCOUNTER ICEMAKER

GRAPHIC SCALE(S)

1/8" = 1' - 0" 0 5' 10' 15' 30'

SYM	DESCRIPTION	DATE	APPR

SEAL

A/E INFO

APPROVED

FOR COMMANDER NAVFAC

ACTIVITY: Approved by LCDR VINCE DEL GRECO, ROICC with PWD YORKTOWN, via Email,

SATISFACTORY TO DATE 03/26/2026

DES RMD | DRW RZL | CHK FCF

PM/DM MME/JWW

BRANCH MANAGER ALG

CHIEF ENG/ARCH JWJ

FIRE PROTECTION HPN

DEPARTMENT OF THE NAVY
NAVAL FACILITIES ENGINEERING SYSTEMS COMMAND
MIDLANT PDC CORE
NAVAL FACILITIES ENGINEERING SYSTEMS COMMAND - MID-ATLANTIC
NAVAL STATION - NORFOLK, VA
NAVAL WEAPONS STATION
YORKTOWN, VIRGINIA
P171 WEAPON MAGAZINES
SEGREGATION FACILITIES
FLOOR PLAN - SANITARY

SCALE: AS NOTED

EPROJECT NO.: 1737010

CONSTR. CONTR. NO.

NAVFAC DRAWING NO. 12942100

SHEET 426 OF 499

PL101A

DRAWFORM REVISION: 25 AUGUST 2020

4/1/2026 1:48:55 PM PL101A
C:\Users\rachael.duke\Documents\P171-1737010-M-R21-SEG_rachael.duke.rvt

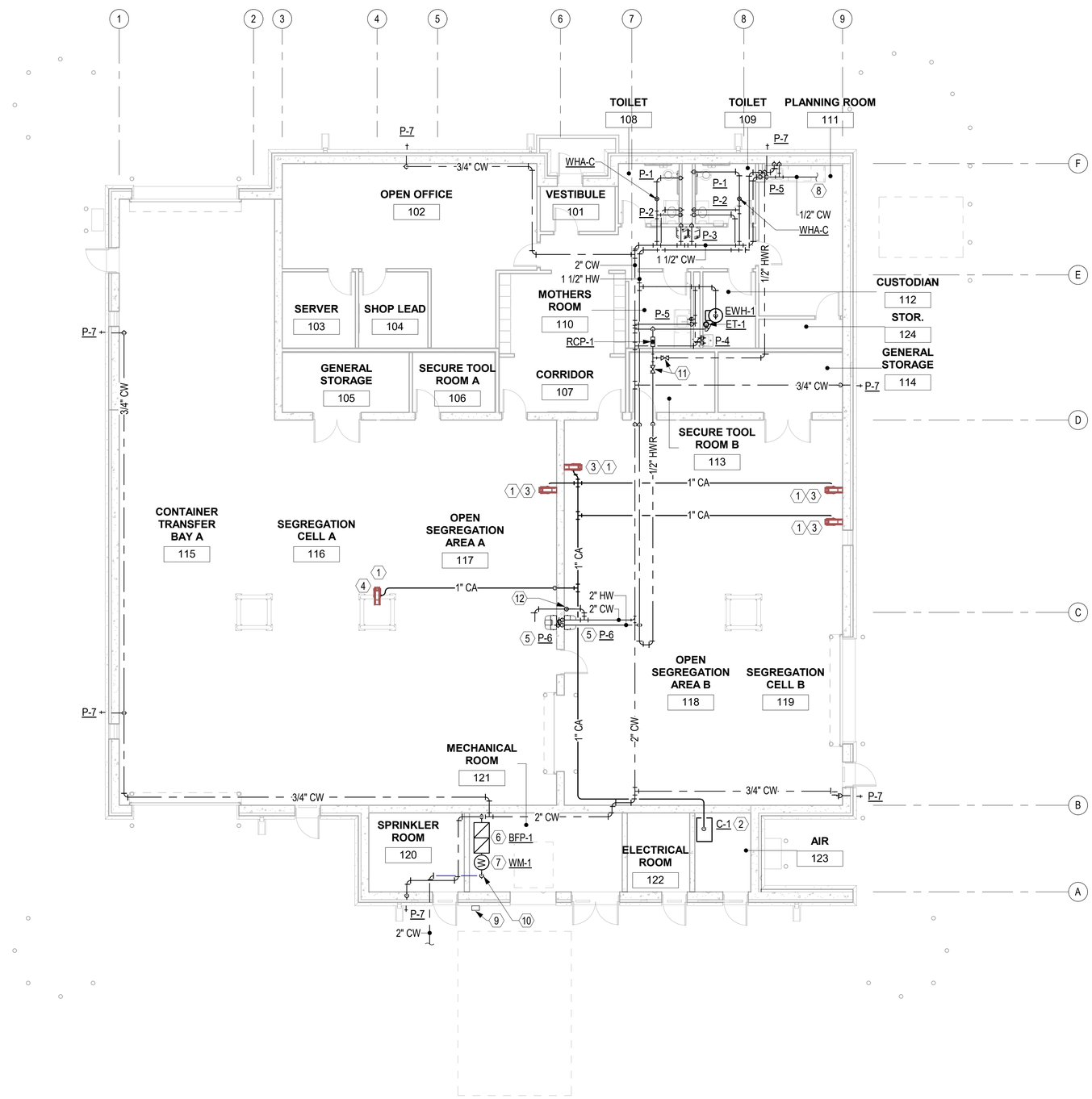

FLOOR PLAN - DOMESTIC WATER AND COMPRESSED AIR

SCALE: 1/8" = 1'-0"

PLAN NORTH — BLDG 1 | PLAN NORTH — BLDG 2

GENERAL NOTES

A SEE SHEET P-001A FOR LEGEND, ABBREVIATIONS, AND GENERAL PLUMBING NOTES.

B BRANCH HEADERS FROM COMPRESSOR AIR MAIN MUST BE TAKEN OFF AT THE TOP.

C PIPES MUST BE INSTALLED PARALLEL WITH THE LINE OF THE BUILDING, WITH MAIN AND BRANCH HEADERS SLOPING DOWN TOWARDS A DEAD END. TRAPS MUST BE INSTALLED IN AIRLINES AT ALL LOW POINTS AND DEAD ENDS TO REMOVE CONDENSATION.

KEYNOTES

1 SEE DETAIL A4 COLUMN/WALL MOUNTED COMPRESSED AIR HOSE REEL, SHEET PJ502A..

2 INSTALL AIR COMPRESSOR, REFRIGERATED AIR DRYER, FILTER AND INTERCONNECTION PIPING AND COMPONENTS PER MANUFACTURER'S INSTRUCTIONS, ROUTE DRAIN LINE FROM EACH COMPONENT TO FLOOR DRAIN SO THAT THE DRAIN IS NOT A TRIP HAZARD. SEE DETAIL A1 AIR COMPRESSOR PIPING DIAGRAM, SHEET PJ502A.

3 MOUNT HOSE REEL ON WALL.

4 MOUNT HOSE REEL ON COLUMN.

5 SEE DETAIL A1, EMERGENCY SHOWER AND EYEWASH SHEET PJ501A.

6 2" DOMESTIC BACKFLOW PREVENTER. SEE PJ503A DETAIL A3 FOR ADDITIONAL INFORMATION.

7 PROVIDE 2" TOTALIZING WATER METER MANUFACTURED BY NEPTUNE WITH PULSE OUTPUT AND PRO-CODER REGISTER. PULSE OUTPUT MUST BE MANUFACTURED BY RIOTRONIC (MODEL NT10-4P-CF-1). SEE PJ503A DETAIL A3 FOR ADDITIONAL INFORMATION.

8 1/2" LINE TO UNDERCOUNTER ICE MACHINE.

9 REMOTE WALL MOUNTED TOUCHPAD MANUFACTURED BY NEPTUNE WITH 3 STRANDED WIRING IN CONDUIT TO PROCODER REGISTER.

10 SEE DETAIL B2 TYPICAL CONCRETE FLOOR PENETRATION, SHEET PJ502A.

11 PROVIDE BALANCING VALVE. BALANCE BOTH TO 0.25 GPM.

12 PIPING FROM TRAP PRIMER (1/2"). PIPING EXTENDS TO EMERGENCY SHOWER AND EYEWASH FLOOR DRAINS.

GRAPHIC SCALE(S)

1/8" = 1' - 0" 0 5' 10' 15' 30'

SYM	DESCRIPTION	DATE	APPR

SEAL

A/E INFO

APPROVED

FOR COMMANDER NAVFAC

ACTIVITY: Approved by LCDR VINCE DEL GRECO, ROICC with PWD YORKTOWN, via Email.

SATISFACTORY TO DATE 03/26/2026

DES RMD | DRW RZL | CHK FCF

PM/DM MME/JWW

BRANCH MANAGER ALG

CHIEF ENG/ARCH JWJ

FIRE PROTECTION HPN

DEPARTMENT OF THE NAVY
NAVAL FACILITIES ENGINEERING SYSTEMS COMMAND
MID-LANT PDC CORE

NAVAL FACILITIES ENGINEERING SYSTEMS COMMAND - MID-ATLANTIC
NAVAL STATION - NORFOLK, VA

NAVAL WEAPONS STATION
YORKTOWN, VIRGINIA

P171 WEAPON MAGAZINES
SEGREGATION FACILITIES

FLOOR PLAN - DOMESTIC WATER AND COMPRESSED AIR

SCALE: AS NOTED

EPROJECT NO.: 1737010

CONSTR. CONTR. NO.

NAVFAC DRAWING NO. 12942101

SHEET 427 OF 499

PL111A

DRAWFORM REVISION: 25 AUGUST 2020

4/1/2026 1:48:57 PM PL111A
C:\Users\rachael.duke\Documents\P171-1737010-M-R21-SEG_rachael.duke.rvt

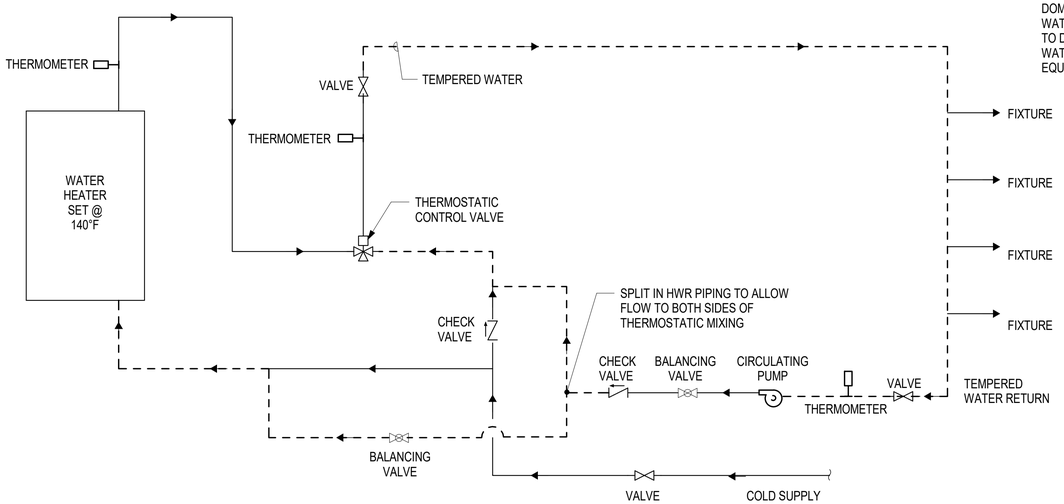

B1 DETAIL - TEMPERED WATER RECIRCULATION RETURN

SCALE: NOT TO SCALE

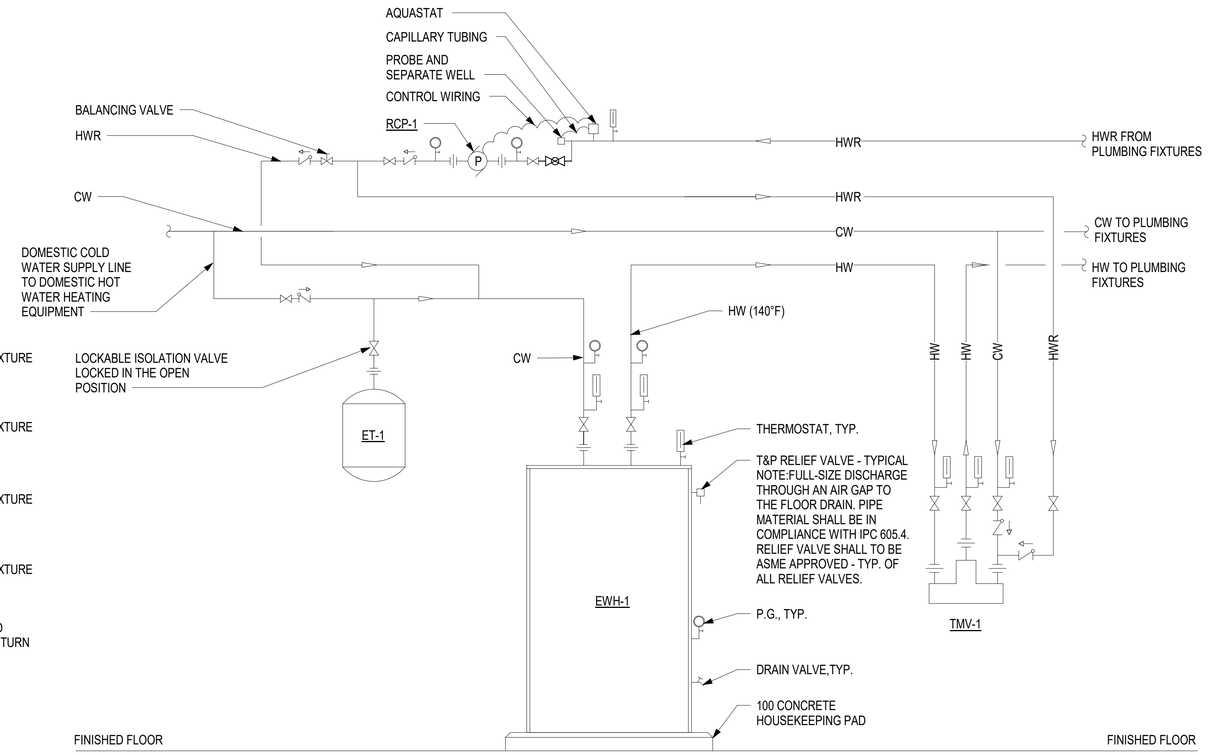

B3 ELECTRIC WATER HEATER

SCALE: NOT TO SCALE

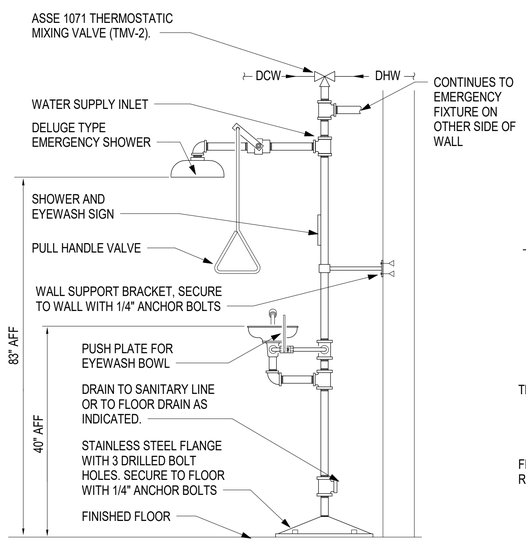

1. INCLUDE VISUAL AND AUDIO ALARM THAT IS CONNECTED TO BAS TO LOG EVENTS. SEE MI803A.
2. ALL DEVICES AND INSTALLATION METHODS MUST COMPLY WITH NFPA 70, ARTICLE 502. BOTH EMERGENCY FIXTURES ARE IN A SPACE DESIGNATED AS CLASS 2, DIV 1.

A1 DETAIL - EMERGENCY SHOWER & EYE WASH

SCALE: NOT TO SCALE

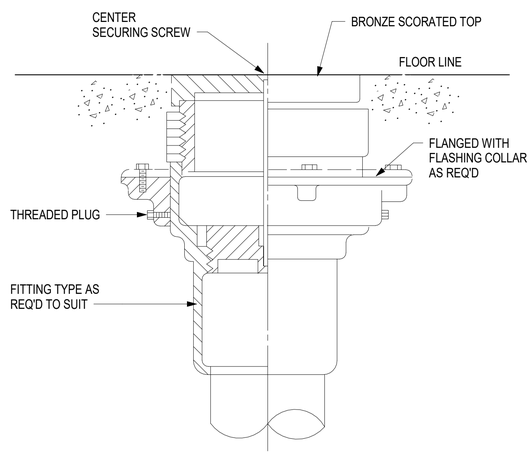

A2 DETAIL - FLOOR CLEANOUT

SCALE: NOT TO SCALE

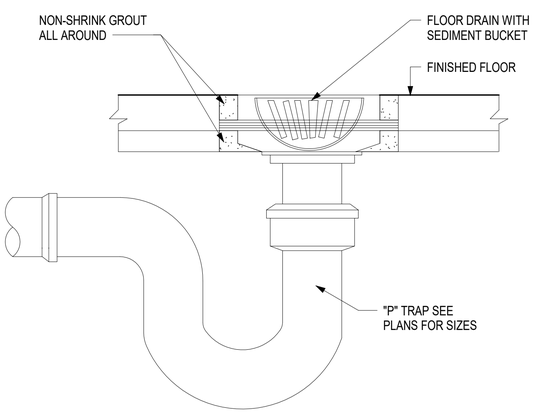

A3 DETAIL - FLOOR DRAIN

SCALE: NOT TO SCALE

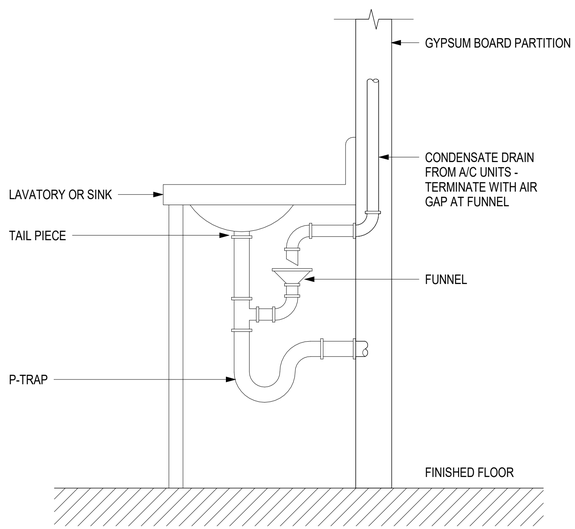

A4 DETAIL - LAVATORY CONDENSATE - FUNNEL EXPOSED

SCALE: NOT TO SCALE

SYM	DESCRIPTION	DATE	APPR

SEAL

A/E INFO

APPROVED

FOR COMMANDER NAVFAC

ACTIVITY: Approved by LCDR VINCE DEL GRECO, ROICC with PWD YORKTOWN, via Email.

SATISFACTORY TO DATE 03/26/2026

DES RMD | DRW RZL | CHK FCF

PM/DM MME/JWW

BRANCH MANAGER ALG

CHIEF ENG/ARCH JWJ

FIRE PROTECTION HPN

DEPARTMENT OF THE NAVY
NAVAL FACILITIES ENGINEERING SYSTEMS COMMAND
MIDLANT PDC CORE
NAVAL FACILITIES ENGINEERING SYSTEMS COMMAND - MID-ATLANTIC
NAVAL STATION - NORFOLK, VA
NAVAL WEAPONS STATION
YORKTOWN, VIRGINIA
P171 WEAPON MAGAZINES
SEGREGATION FACILITIES
PLUMBING DETAILS

SCALE: AS NOTED

EPROJECT NO.: 1737010

CONSTR. CONTR. NO.

NAVFAC DRAWING NO. 12942102

SHEET 428 OF 499

PJ501A

DRAWFORM REVISION: 25 AUGUST 2020

4/1/2026 1:48:49 PM PJ501A
C:\Users\rachael.duke\Documents\P171-1737010-M-R21-SEG_rachael.duke.rvt

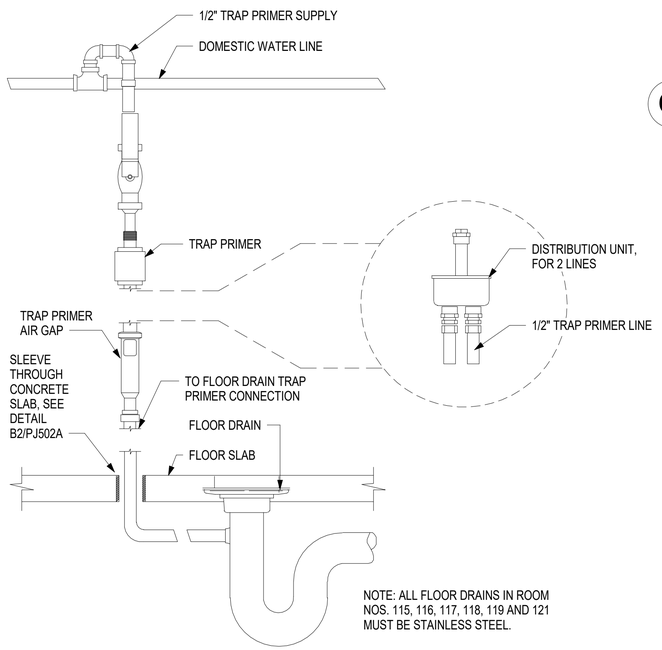

NOTE: ALL FLOOR DRAINS IN ROOM NOS. 115, 116, 117, 118, 119 AND 121 MUST BE STAINLESS STEEL.

B1 DETAIL - TRAP PRIMER

SCALE: NOT TO SCALE

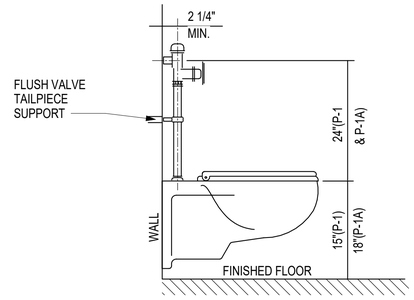

C2 DETAIL - PLUMBING FIXTURE MOUNT

SCALE: NOT TO SCALE

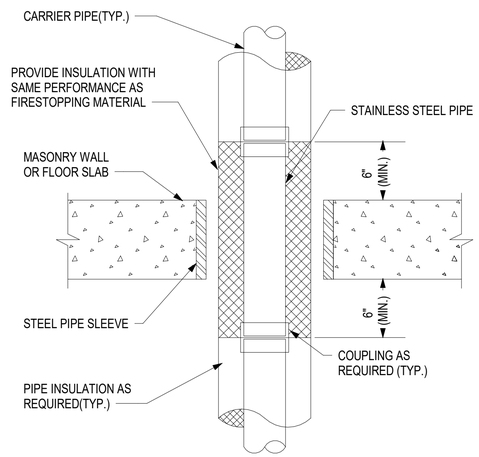

NOTE: PIPE SLEEVE MUST BE SIZED TO PROVIDE 1/4 "ALL AROUND CLEARANCE.

B2 DETAIL - TYPICAL CONCRETE FLOOR PENETRATION

SCALE: NOT TO SCALE

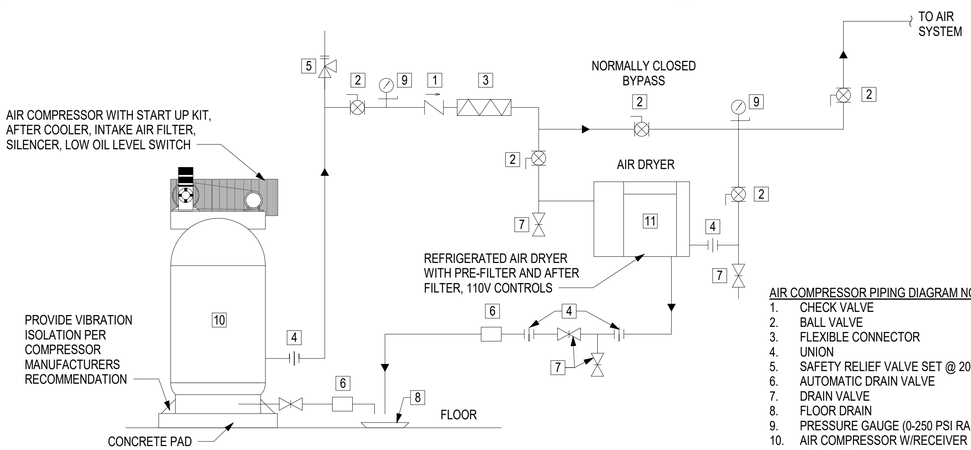

AIR COMPRESSOR PIPING DIAGRAM NOTES

1. CHECK VALVE
2. BALL VALVE
3. FLEXIBLE CONNECTOR
4. UNION
5. SAFETY RELIEF VALVE SET @ 200 PSI
6. AUTOMATIC DRAIN VALVE
7. DRAIN VALVE
8. FLOOR DRAIN
9. PRESSURE GAUGE (0-250 PSI RANGE)
10. AIR COMPRESSOR W/RECEIVER
11. AIR DRYER

A1 DETAIL - AIR COMPRESSOR PIPING DIAGRAM

SCALE: NOT TO SCALE

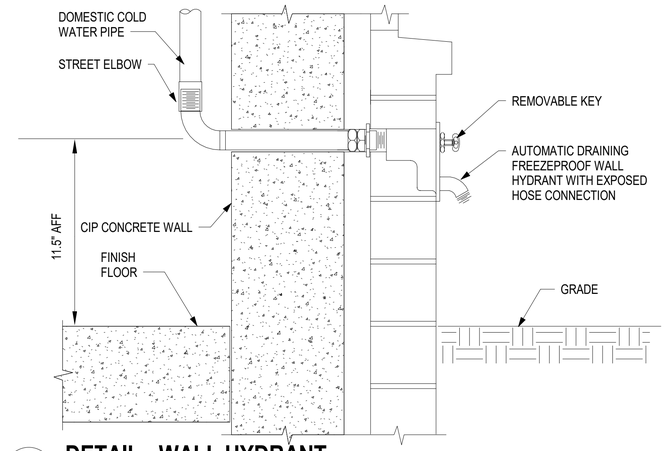

C4 DETAIL - WALL HYDRANT

SCALE: NOT TO SCALE

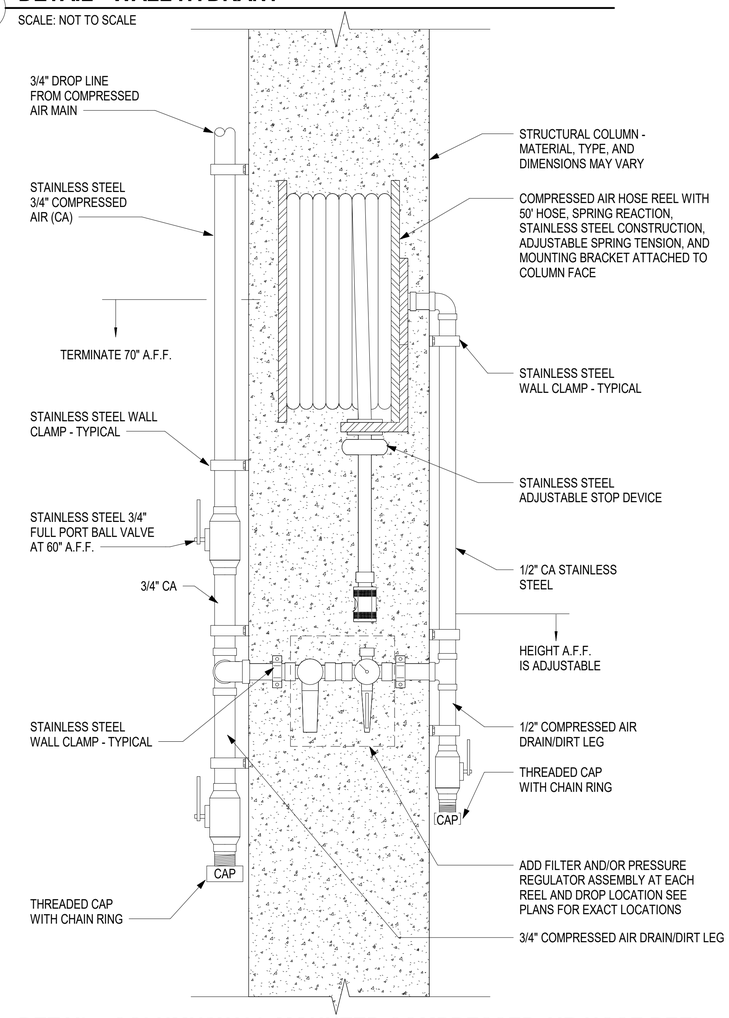

A4 DETAIL - COLUMN/WALL MOUNTED COMPRESSED AIR HOSE REEL

SCALE: NOT TO SCALE

SYM	DESCRIPTION	DATE	APPR

SEAL

A/E INFO

APPROVED

FOR COMMANDER NAVFAC

ACTIVITY: Approved by LCDR VINCE DEL GRECO, ROICC with PWD YORKTOWN, via Email,

SATISFACTORY TO DATE 03/26/2026

DES RMD | DRW RZL | CHK FCF

PM/DM MME/JWW

BRANCH MANAGER ALG

CHIEF ENG/ARCH JWJ

FIRE PROTECTION HPN

DEPARTMENT OF THE NAVY
NAVAL FACILITIES ENGINEERING SYSTEMS COMMAND
MIDLANT PDC CORE
NAVAL FACILITIES ENGINEERING SYSTEMS COMMAND - MID-ATLANTIC
NAVAL STATION - NORFOLK, VA
NAVAL WEAPONS STATION YORKTOWN, VIRGINIA
P171 WEAPON MAGAZINES SEGREGATION FACILITIES
PLUMBING DETAILS

SCALE: AS NOTED

EPROJECT NO.: 1737010

CONSTR. CONTR. NO.

NAVFAC DRAWING NO. 12942103

SHEET 429 OF 499

PJ502A

DRAWFORM REVISION: 25 AUGUST 2020

4/1/2026 1:48:50 PM PJ502A
C:\Users\rachael.duke\Documents\P171-1737010-M-R21-SEG_rachael.duke.rvt

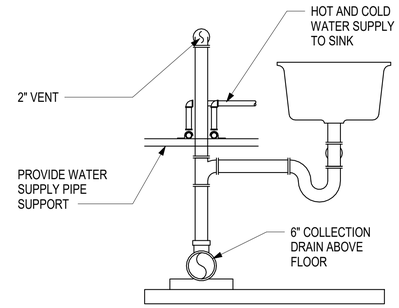

C3 DETAIL - UTILITY SINK

SCALE: NOT TO SCALE

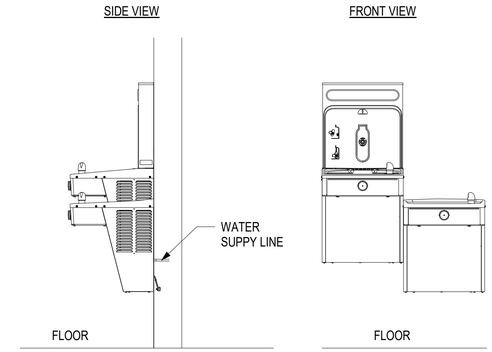

NOTES:
1. INSTALL ACCORDING TO MANUFACTURER'S INSTRUCTIONS FOR ABA COMPLIANT INSTALLATION.
2. COORDINATE DRINKING FOUNTAIN CONNECTIONS WITH FOUNTAIN SUPPORT BLOCKING STRUCTURAL INTEGRITY.

C4 DETAIL - DRINKING FOUNTAIN HI LO WITH BOTTLE FILLER

SCALE: NOT TO SCALE

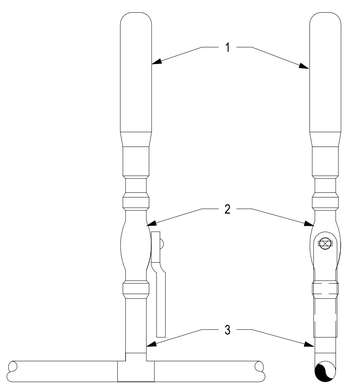

NOTES:
1. WATER HAMMER ARRESTOR.
2. BALL VALVE, SAME NOMINAL SIZE AS PIPE BRANCH IN CHASE. OPENING IN BALL VALVE TO MATCH PIPE I.D.
3. PIPE SAME SIZE AS BRANCH IN CHASE TO WHICH IT IS ATTACHED.

NOTE: PROVIDE REDUCER IF REQUIRED BETWEEN VALVE AND WATER HAMMER ARRESTOR.

A1 DETAIL - WATER HAMMER ARRESTOR

SCALE: NOT TO SCALE

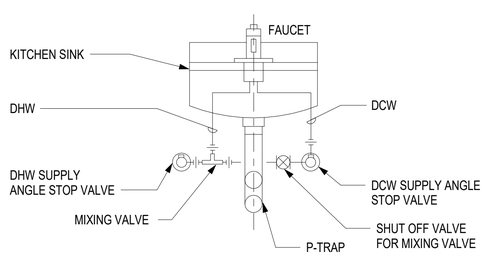

A2 DETAIL - KITCHEN HAND SINK MIXING VALVE

SCALE: NOT TO SCALE

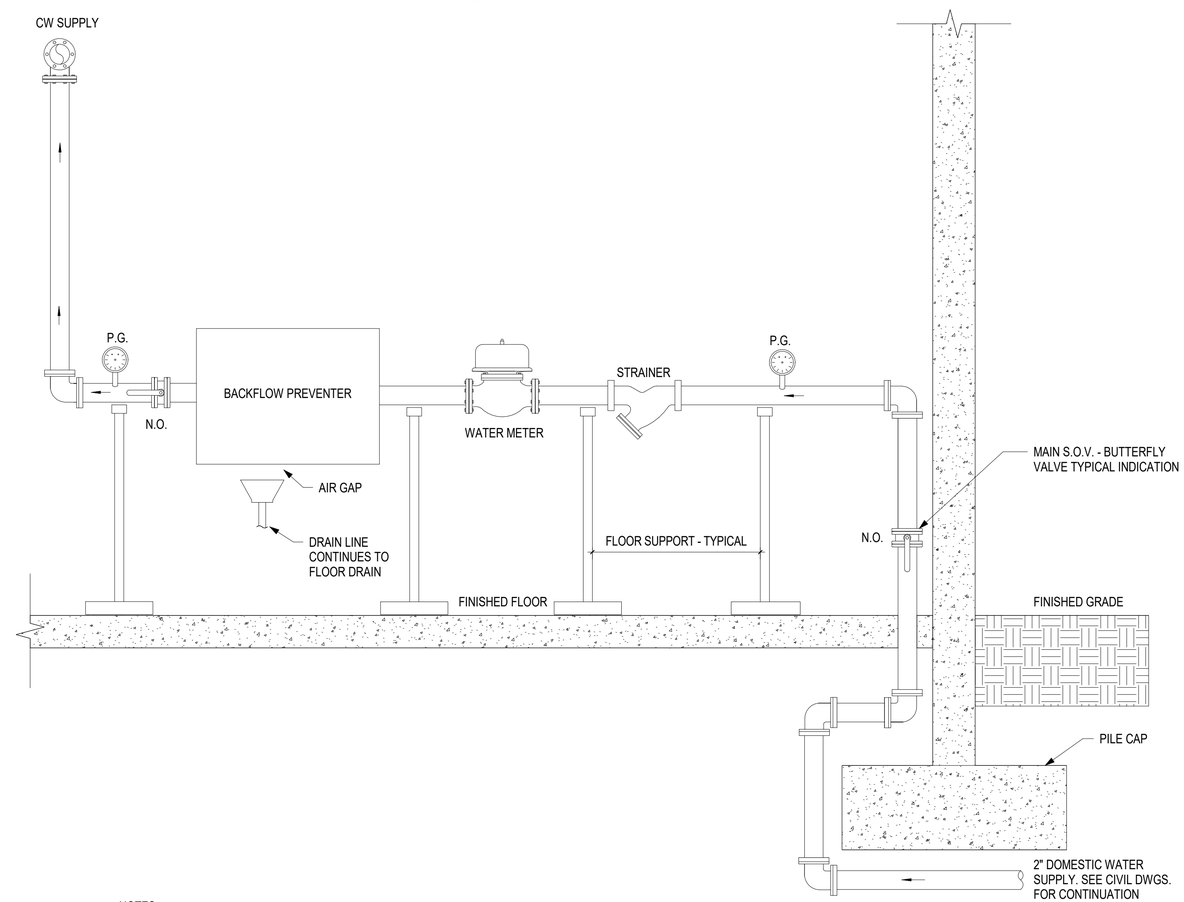

NOTES:
1. SUPPORT WATER SERVICE ENTRANCE ASSEMBLY EQUIPMENT (WATER METER, BACKFLOW PREVENTER) INDEPENDENT OF PIPING.
2. INSTALL WITH A MINIMUM OF FOUR DIAMETERS OF STRAIGHT PIPE LENGTH BEFORE AND AFTER WATER METER.

A3 WATER SERVICE ENTRANCE DETAIL - METER AND SINGLE PRV WITH BYPASS

SCALE: NOT TO SCALE

SYM	DESCRIPTION	DATE	APPR

NAVFAC

SEAL

A/E INFO

APPROVED

FOR COMMANDER NAVFAC

ACTIVITY
Approved by LCDR VINCE DEL GRECO, ROICC with PWD YORKTOWN, via Email.

SATISFACTORY TO DATE 03/26/2026

DES RMD	DRW RZL	CHK FCF	
PM/DM	MME/JWW		
BRANCH MANAGER	ALG		
CHIEF ENG/ARCH	JWJ		
FIRE PROTECTION	HPN		

DEPARTMENT OF THE NAVY
NAVAL FACILITIES ENGINEERING SYSTEMS COMMAND
MIDLANT PDC CORE
NAVAL FACILITIES ENGINEERING SYSTEMS COMMAND - MID-ATLANTIC
NAVAL STATION - NORFOLK, VA
NAVAL WEAPONS STATION
YORKTOWN, VIRGINIA
P-171 WEAPON MAGAZINES SEGREGATION FACILITIES
PLUMBING DETAILS

SCALE: AS NOTED
EPROJECT NO.: 1737010
CONSTR. CONTR. NO.
NAVFAC DRAWING NO. 12942104
SHEET 430 OF 499

PJ503A

DRAWFORM REVISION: 25 AUGUST 2020

4/1/2026 1:48:51 PM PJ503A
C:\Users\rachael.duke\Documents\P171-1737010-M-R21-SEG_rachael.duke.rvt

WATER HAMMER ARRESTER SCHEDULE

MARK	PDI STANDARD SIZE	FIXTURE UNITS	REMARKS
WHA-C	C	33-60	1,2,3

1. ACCESS PANEL.
2. ASSE 1010, PDI WH201.
3. CHARGED GAS COMPRESSION UNIT.

WATER HEATER SCHEDULE

MARK	LOCATION	STORAGE CAPACITY (GAL)	EWT (°F)	RECOVERY 100 DEG RISE (GPH)	kW	ELEMENT (kW)	ELECTRICAL DATA				REMARKS
							V	PH	Hz	FLA	
EWH-1	110 CUSTODIAN	50.0	55 °F	25	6.0	2.00	480	3	60	7.2	

PLUMBING FIXTURE SCHEDULE

MARK	FIXTURE TYPE	CW	HW	WASTE	VENT (MIN.)	REMARKS
P-1	WATER CLOSET ABA	1"		4"	2"	FLUSH VALVE, SEAT
P-2	LAVATORY ABA	3/4"	3/4"	2"	1 1/2"	FAUCET, AERATOR, TRAP, PIPE COVERS, MIXER
P-3	DRINKING FOUNTAIN ABA	3/4"	3/4"	2"	1 1/2"	
P-4	PRE-CAST TERRAZZO MOP SINK	3/4"	3/4"	2"	1 1/2"	EXPOSED YOKE FAUCET
P-5	KITCHEN SINK	3/4"	3/4"	2"	1 1/2"	UNDERCOUNT MOUNT
P-6	EMERGENCY SHOWER/EYE WASH	1"	1"	2"	2"	THERMOSTATIC MIXING VALVE, STROBE, AND ALARM. ALL ASSOCIATED PIPING AND APPERTUANCES MUST BE 304 STAINLESS STEEL.
P-7	65C-6	3/4"				STAINLESS STEEL

THERMOSTATIC MIXING VALVE SCHEDULE

MARK	LOCATION	SIZE	TYPE	ENTERING DCW TEMP (°F)	ENTERING DHW TEMP (°F)	LEAVING DHW TEMP (°F)	MAX PRESSURE LOSS (PSI)	MAX FLOW (GPM)	REMARKS
TMV-1	110 CUSTODIAN	1"	ASSE 1017	50	140	131	10	55	1
TMV-2	SEGREGATION AREA, P-6	1 1/4"	ASSE 1071	50	131	85	5	34	2
TMV-3	P-2 AND P-5 FIXTURES	3/4"	ASSE 1070	50	131	105	10	2	3

1. SEE MI803 FOR ALARMING
2. TMV-2 MUST BE 304 STAINLESS STEEL.
3. MUST BE PROVIDED AT EVERY P-2 AND P-5 FIXTURE TYPE.

EXPANSION TANK SCHEDULE

MARK	LOCATION	SERVICE	TANK SIZE (GAL)	ACCEPTANCE VOLUME (GAL)	WORKING PRESSURE (PSI)	CONNECTION SIZE	DIMENSIONS (IN)
ET-1	112 CUSTODIAN	DOMESTIC HOT WATER	2	0.9	150	3/4"	8" DIA x 12-5/7" TALL

AIR COMPRESSOR SCHEDULE

MARK	LOCATION	UNIT CONFIGURATION	TANK CONFIGURATION	TANK SIZE (GAL)	ACFM @ 175 PSIG	RPM	ELECTRICAL DATA			WEIGHT (LBS)	REMARKS
							HP	V	Ph		
C-1	123 AIR	SIMPLEX	VERTICAL	80	16.8	1775	5	460	3	597	1

1. ALL ASSOCIATED PIPING AND APPERTUNANCES MUST BE 304 STAINLESS STEEL.

AIR DRYER SCHEDULE

MARK	TYPE	CAPACITY		DEW POINT		AMBIENT TEMP (°F)	ELECTRICAL		
		SCFM	PSI	EAT	LAT		VOLTS	PHASE	HERTZ
AD-1	DIRECT EXPANSION	82	200	75	50	95	150	1	60

DOMESTIC WATER RECIRCULATION PUMP

MARK	LOCATION	TYPE	GPM	HEAD (FT OF H20)	ELECTRICAL		
					VOLTS	PHASE	HERTZ
RCP-1	112 CUSTODIAN	INLINE	1	18	120	1	60

PLUMBING EQUIPMENT SCHEDULE

MARK	EQUIPMENT DESCRIPTION	REMARKS
WM-1	WATER METER	METER TO BE NEPTUNE T-10 MODEL SMART METER AND COMPLY WITH ANSI/AWWA C700.
FD-1	FLOOR DRAIN	FLOOR DRAIN MUST BE ADJUSTABLE.
FD-3	FLOOR DRAIN	FLOOR DRAIN MUST BE ADJUSTABLE. FLOOR DRAIN MUST BE 304 STAINLESS STEEL.
TP-1	TRAP PRIMER	1/2 OUNCE OUTPUT, 3 PSI PRESSURE DROP. PRIMER MUST BE 304 STAINLESS STEEL.

OIL WATER SEPARATOR SCHEDULE

MARK	GPM	CAPACITY (GAL)
OWS-1	10	50

SYM	DESCRIPTION	DATE	APPR

SEAL

A/E INFO

APPROVED

FOR COMMANDER NAVFAC

ACTIVITY
Approved by LCDR VINCE DEL GRECO, ROICC with PWD YORKTOWN, via Email.

SATISFACTORY TO DATE 03/26/2026

DES RMD DRW RZL CHK FCF

PM/DM MME/JWW

BRANCH MANAGER ALG

CHIEF ENG/ARCH JWJ

FIRE PROTECTION HPN

DEPARTMENT OF THE NAVY
NAVAL FACILITIES ENGINEERING SYSTEMS COMMAND
MIDLANT PDC CORE

NAVAL FACILITIES ENGINEERING SYSTEMS COMMAND - MID-ATLANTIC
NAVAL STATION - NORFOLK, VA

NAVAL WEAPONS STATION
YORKTOWN, VIRGINIA

P171 WEAPON MAGAZINES
SEGREGATION FACILITIES

PLUMBING SCHEDULES

SCALE: AS NOTED

EPROJECT NO.: 1737010

CONSTR. CONTR. NO.

NAVFAC DRAWING NO.
12942105

SHEET 431 OF 499

PJ601A

DRAWFORM REVISION: 25 AUGUST 2020

4/1/2026 1:48:51 PM PJ601A
C:\Users\rachael.duke\Documents\P171-1737010-M-R21-SEG_rachael.duke.rvt

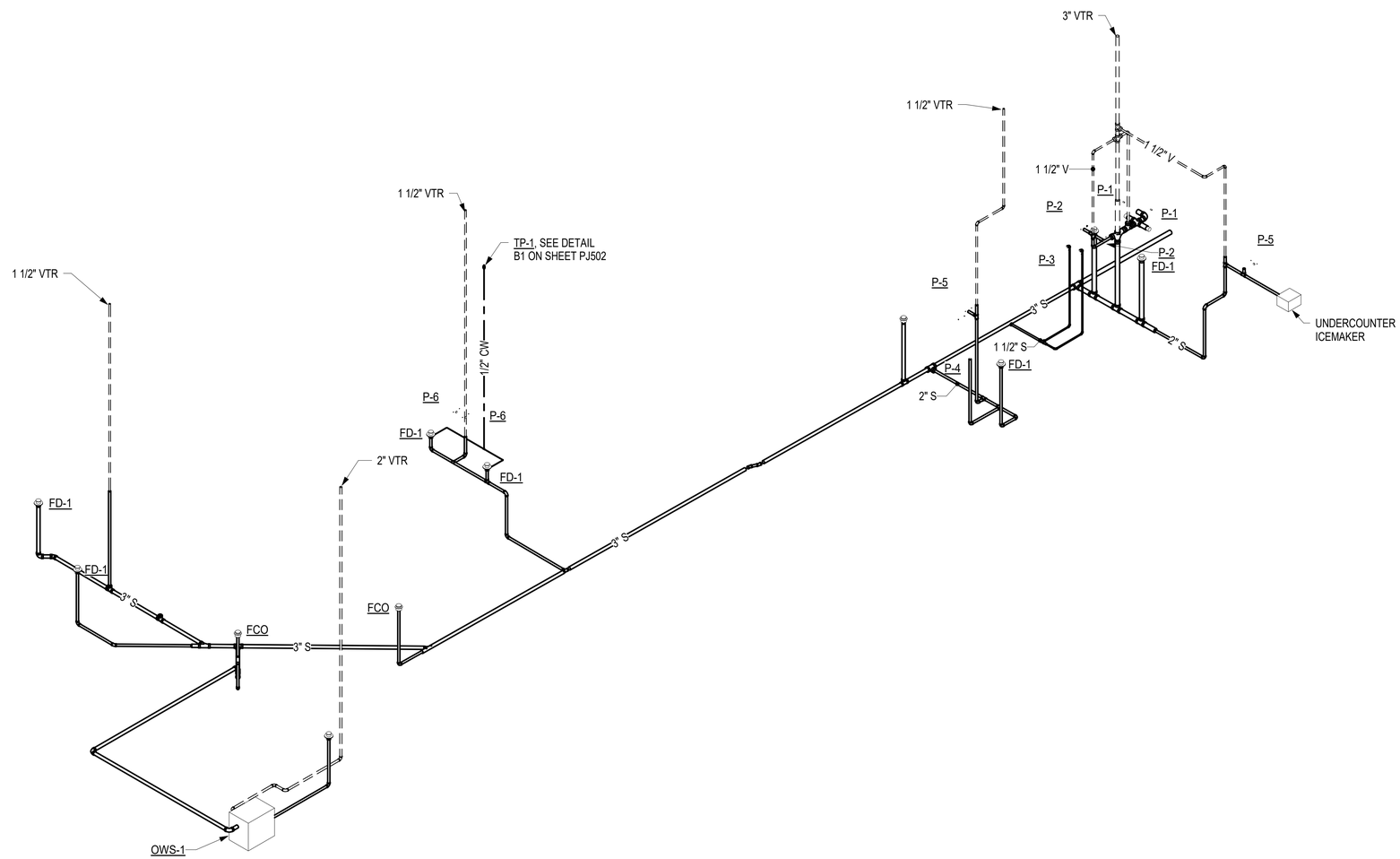

A1 SANITARY RISER

SCALE: NOT TO SCALE

SYM	DESCRIPTION	DATE	APPR

SEAL

A/E INFO

APPROVED

FOR COMMANDER NAVFAC

ACTIVITY
Approved by LCDR VINCE DEL GRECO, ROICC with PWD YORKTOWN, via Email.

SATISFACTORY TO DATE 03/26/2026

DES RMD | DRW RZL | CHK FCF

PM/DM MME/JWW

BRANCH MANAGER ALG

CHIEF ENG/ARCH JWJ

FIRE PROTECTION HPN

DEPARTMENT OF THE NAVY
NAVAL FACILITIES ENGINEERING SYSTEMS COMMAND
MID-LANT PDC CORE
NAVAL FACILITIES ENGINEERING SYSTEMS COMMAND - MID-ATLANTIC
NAVAL STATION - NORFOLK, VA
NAVAL WEAPONS STATION
YORKTOWN, VIRGINIA
P171 WEAPON MAGAZINES
SEGREGATION FACILITIES
PLUMBING DIAGRAMS

SCALE: AS NOTED

EPROJECT NO.: 1737010

CONSTR. CONTR. NO.

NAVFAC DRAWING NO.
12942106

SHEET 432 OF 499

PJ701A

DRAWFORM REVISION: 25 AUGUST 2020

4/1/2026 1:48:52 PM
C:\Users\rachael.duke\Documents\P171-1737010-M-R21-SEG_rachael.duke.rvt
PJ701A

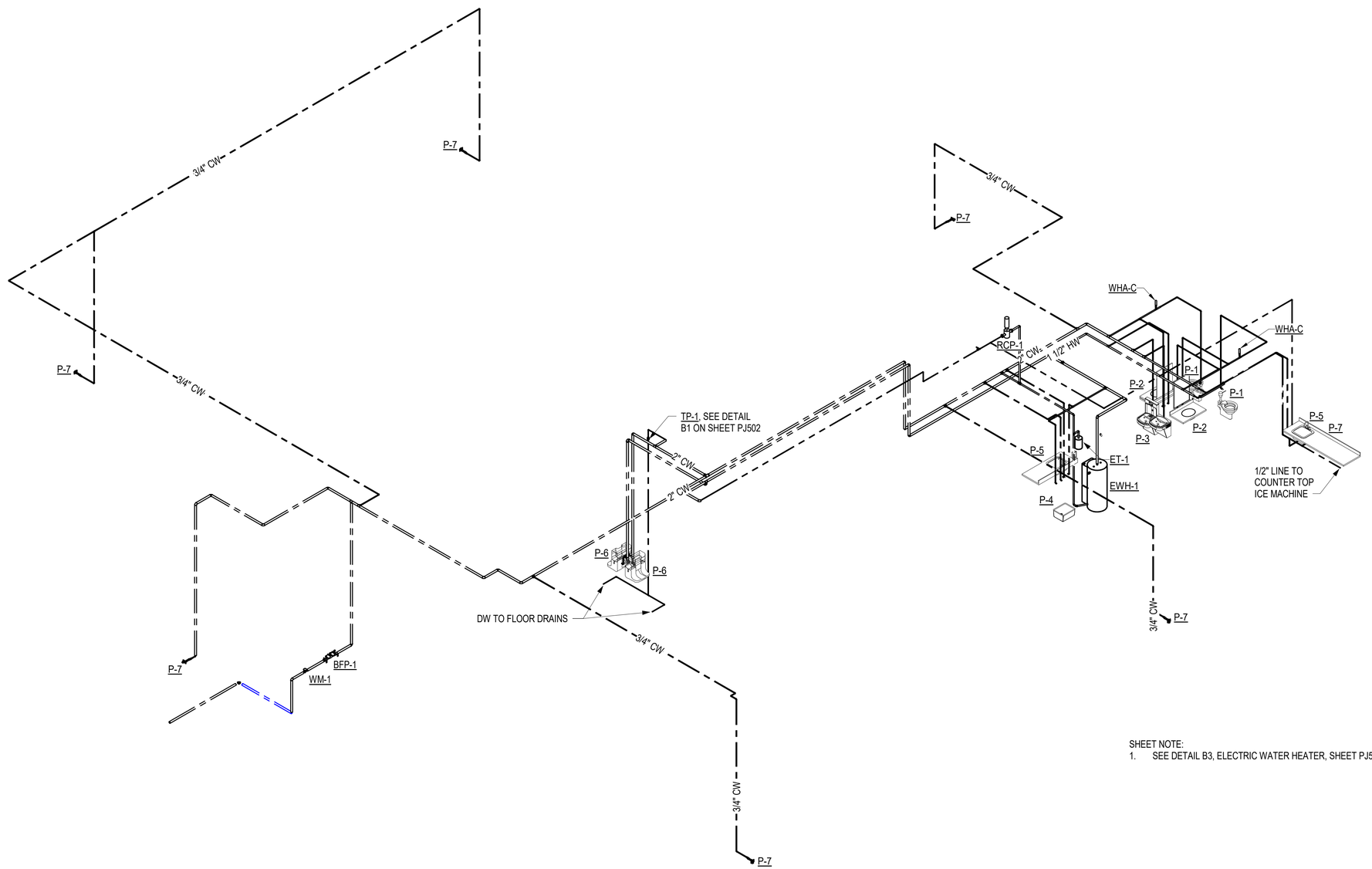

SHEET NOTE:

1. SEE DETAIL B3, ELECTRIC WATER HEATER, SHEET PJ501A FOR BALANCING VALVE, ETC.

A1 DOMESTIC WATER RISER

SCALE: NOT TO SCALE

SYM	DESCRIPTION	DATE	APPR

SEAL

A/E INFO

APPROVED

FOR COMMANDER NAVFAC

ACTIVITY
Approved by LCDR VINCE DEL GRECO, ROICC with PWD YORKTOWN, via Email.

SATISFACTORY TO DATE 03/26/2026

DES RMD DRW RZL CHK FCF

PM/DM MME/JWW

BRANCH MANAGER ALG

CHIEF ENG/ARCH JWJ

FIRE PROTECTION HPN

DEPARTMENT OF THE NAVY
NAVAL FACILITIES ENGINEERING SYSTEMS COMMAND
MID-ATLANTIC PDC CORE

NAVAL FACILITIES ENGINEERING SYSTEMS COMMAND - MID-ATLANTIC
NAVAL STATION - NORFOLK, VA

NAVAL WEAPONS STATION
YORKTOWN, VIRGINIA

P171 WEAPON MAGAZINES
SEGREGATION FACILITIES

PLUMBING DIAGRAM

SCALE: AS NOTED

EPROJECT NO.: 1737010

CONSTR. CONTR. NO.

NAVFAC DRAWING NO.
12942107

SHEET 433 OF 499

PJ702A

DRAWFORM REVISION: 25 AUGUST 2020

4/1/2026 1:48:53 PM PJ702A
C:\Users\rachael.duke\Documents\P171-1737010-M-R21-SEG_rachael.duke.rvt

MECHANICAL LEGEND

GENERAL ITEMS:

- EXISTING ITEMS (SOLID, LIGHT)
- ITEMS TO BE DEMOLISHED (DASHED)
- ITEMS TO BE PROVIDED, NEW WORK (SOLID)
- POINT OF DISCONNECTION
- POINT OF CONNECTION
- 1 — PLAN REFERENCE NOTE
- 100 — ROOM NUMBER
- EQUIPMENT W/ CLEARANCE
- 1 — REVISION SYMBOL
- 1 / M-301 — SECTION/ELEVATION CUT
- 1 / M-401 — PARTIAL PLAN/DETAIL SYMBOL

DUCTWORK:

- 12x20 — DUCT SIZE, FIRST FIGURE IS SIDE SHOWN
- DUCT SECTION, SUPPLY AIR
- DUCT SECTION, RETURN AIR
- DUCT SECTION, EXHAUST AIR
- DUCT WITH ACOUSTICAL LINING
- DUCT WITH FLEXIBLE CANVAS CONNECTION
- FLEXIBLE DUCTWORK (2X LINE)
- ELBOW
- ELBOW WITH TURNING VANES
- DUCT WITH ROUND ELBOW 1.5 Ø" TURNING RADIUS MIN.
- DUCT W/ TRANSITION
- BRANCH TAKE-OFF
- DUCT BREAK (CONTINUATION)
- SUPPLY DIFFUSER
- RETURN GRILLE
- EXHAUST GRILLE

DUCT DAMPERS:

- BACKDRAFT DAMPER
- BD — BALANCE VOLUME DAMPER
- FIRE DAMPER
- M — MOTORIZED DAMPER
- OPPOSING BLADE DAMPER
- PARALLEL BLADE DAMPER
- AIRFLOW DIRECTION

PIPING:

- D — CONDENSATE DRAIN
- CHR — CHILLED WATER RETURN
- CHS — CHILLED WATER SUPPLY
- CWR — CONDENSER WATER RETURN
- CWS — CONDENSER WATER SUPPLY
- HPS — HIGH PRESSURE STEAM (125 PSI)
- HWR — HOT WATER RETURN
- HWS — HOT WATER SUPPLY
- LPC — LOW PRESSURE CONDENSATE RETURN
- LPS — LOW PRESSURE STEAM (15 PSI)
- MPS — MEDIUM PRESSURE STEAM (20 PSI)
- MU — MAKEUP WATER
- RL — REFRIGERANT LIQUID
- RS — REFRIGERANT SUCTION
- HG — REFRIGERANT HOT GAS
- DIRECTION OF FLOW
- DIRECTION OF SLOPE
- CAP / BLIND FLANGE
- DROP / RISE IN PIPING
- TEE UP
- TEE DOWN
- UNION
- PIPE BREAK (CONTINUATION)

VALVES & PIPE ACCESSORIES:

- BALL VALVE
- BUTTERFLY VALVE
- GATE VALVE
- GLOBE VALVE
- CHECK VALVE
- MANUAL BALANCING VALVE
- PRESSURE REDUCING VALVE
- MANUAL FLOW CONTROL BALANCING VALVE
- 2-WAY VALVE
- 3-WAY VALVE
- STRAINER
- STRAINER WITH BLOWDOWN VALVE
- PRESSURE GAUGE WITH SHUTOFF COCK
- THERMOMETER
- P&T RELIEF VALVE (PIPE TO DRAIN)
- MANUAL AIR VENT
- AUTOMATIC AIR VENT
- PT PORT
- PUMP
- STEAM TRAP (TYPE AS INDICATED)
- CONCENTRIC REDUCER
- FLEXIBLE CONNECTOR
- QUICK DISCONNECT
- PIPE SLEEVE (STEEL OR CAST IRON)

MECHANICAL SYMBOLS

- A / 150 — AIR TERMINAL TAG WITH AIR FLOW (CFM)
- T — THERMOSTAT
- T — THERMOSTAT (STAND ALONE)
- ACM — AIR CONTROL MEASURING STATION
- DSD — DUCT SMOKE DETECTOR
- CO — CARBON MONOXIDE SENSOR
- H — HUMIDISTAT
- NO2 — NITROGEN DIOXIDE SENSOR
- PE — PHOTOELECTRIC SENSOR

GENERAL MECHANICAL NOTES

A THESE GENERAL MECHANICAL NOTES APPLY TO MECHANICAL DRAWINGS IN THIS SET. SHEET SPECIFIC NOTES ARE INDICATED ON EACH SHEET UNDER GENERAL SHEET NOTES.

B PROVIDE MATERIALS AND EQUIPMENT AND PERFORM LABOR REQUIRED TO INSTALL COMPLETE AND OPERABLE MECHANICAL SYSTEMS AS INDICATED ON THE DRAWINGS, AS SPECIFIED, AND AS REQUIRED BY CODE.

C INSTALL MECHANICAL EQUIPMENT AND APPURTENANCES IN ACCORDANCE WITH MANUFACTURER'S RECOMMENDATIONS, CONTRACT DOCUMENTS, APPLICABLE CODES, AND REGULATIONS.

D CONCEAL DUCTWORK AND PIPING ABOVE SUSPENDED CEILINGS AND IN WALLS, UNLESS OTHERWISE NOTED.

E PROVIDE ACCESS PANELS IN WALLS AND CEILINGS TO SERVE FIRE DAMPERS, VALVES, SMOKE DETECTORS, AND OTHER CONCEALED MECHANICAL EQUIPMENT THAT REQUIRES ROUTINE MAINTENANCE. ACCESS PANELS SHALL BE SIZED AS REQUIRED TO ALLOW WORKING CLEARANCE FOR DUCT ACCESS DOORS.

F 90 DEGREE RECTANGULAR MITERED DUCT ELBOWS IN SUPPLY AND RETURN DUCTWORK MUST HAVE TURNING VANES AND BALANCING DAMPERS . PROVIDE AN ACCESS DOOR UPSTREAM OF ELBOW FOR TURNING VANE INSPECTION AND CLEANING.

G PROVIDE P-TRAPS IN CONDENSATE DRAIN PIPING AT EACH AC UNIT UNLESS THE RTU IS EQUIPPED WITH AN INTERNAL TRAP.

H CONDENSATE DRAIN PIPING CLEANOUTS MUST BE INSTALLED AT EACH CHANGE IN DIRECTION GREATER THAN 45 DEGREES. WHERE MORE THAN ONE CHANGE OF DIRECTION OCCURS IN A RUN OF PIPING, ONLY ONE CLEANOUT IS REQUIRED FOR EACH 40 FEET OF DEVELOPED LENGTH. COMBINATION WYE AND 1/8 BENDS MUST BE USED IN LIEU OF TEES. UNLESS OTHERWISE INDICATED CONDENSATE LINES MUST SLOPE DOWNWARD AND BE GRAVITY FED.

I MOUNT THERMOSTATS 48 INCHES ABOVE THE FINISHED FLOOR

J TESTING AND BALANCING (TAB): TAB EQUIPMENT AND DUCTWORK; 2-SEASONS. SEE SECTION 23 05 93.00 22 FOR COMPLETE REQUIREMENTS.

K MECHANICAL EQUIPMENT, WHICH IS PROVIDED WITH MANUFACTURER'S INSTALLED CONTROLS, MUST BE STARTED UP BY THE MANUFACTURER'S REPRESENTATIVE IN CONJUNCTION WITH THE CONTROLS CONTRACTOR (NOT MECHANICAL CONTRACTOR). TRAINING AND MANUALS FOR THE MANUFACTURER'S INSTALLED CONTROLS MUST BE PROVIDED BY THE EQUIPMENT MANUFACTURER'S REPRESENTATIVE. CONTROLS CONTRACTOR IS RESPONSIBLE FOR COORDINATING WITH MANUFACTURER'S REPRESENTATIVE FOR THE COMMUNICATION OF THE DDC SYSTEM TO THE MANUFACTURER'S INSTALLED CONTROLS.

L MECHANICAL EQUIPMENT, APPURENANCES, PIPING, DUCTWORK MATERIALS AND CONSTRUCTION LOCATED EXTERIOR TO THE BUILDING, WHERE IT PASSES THROUGH THE BUILDING ENVELOPE, AND IN THE FOLLOWING LIST OF SPACES MUST COMPLY WITH EXTERIOR EXPOSURE REQUIREMENTS ESC = C4. ACCEPTABLE MATERIALS; GALVANIZED STEEL WITH HIGH PERFORMANCE COATING OR STAINLESS STEEL; 120 SPRINKLER ROOM, 121 MECHANICAL ROOM, 122 ELECTRICAL ROOM AND 123 AIR COMPRESSOR.

M ANY ADDITIONAL SERVICES NEEDED TO SUPPORT EQUIPMENT CHOSEN BY CONTRACTOR MUST BE THE CONTRACTOR'S RESPONSIBILITY TO PROVIDE AT NO INCREASED COST TO THE GOVERNMENT.

N PROVIDE BUILDING ENVELOPE PENETRATION ASSEMBLY MATERIALS, COMPONENTS, SEALS, FLASHING, AND SUPPORT IN ACCORDANCE WITH THE AIR BARRIER SPECIFICATION SECTIONS AND DETAILS IN THE CONTRACT DRAWINGS. BULDING SYSTEM PENETRATING ITEMS MUST BE SUPPORTED TO ELIMINATE MOVEMENT AND MINIMIZE VIBRATION AT THE INTERSECTION OF THE PENETRANT AND AIR BARRIER. CONFIGURE SYSTEMS TO ALLOW MOVEMENT AND VIBRATION ELSEWHERE WITHIN THE SYSTEM.

MECHANICAL ABBREVIATIONS

A/C	AIR CONDITIONING
AC	ABOVE CEILING
AD	ACCESS DOOR
AFD	ACCESS FLOOR DIFFUSER
AFF	ABOVE FINISHED FLOOR
AHU	AIR HANDLING UNIT
AI	ANALOG INPUT
AIP	ABANDON IN PLACE
AL	ACOUSTIC LINING (DUCTWORK)
AO	ANALOG OUTPUT
AP	ACCESS PANEL
APD	AIR PRESSURE DROP
AS	AIR SEPARATOR
ATFP	ANTI-TERRORISM FORCE PROTECTION
AV	ANALOG VALUE
B	BOILER
BAS	BUILDING AUTOMATIC SYSTEM (DDC)
BD	BALANCING DAMPER
BDD	BACKDRAFT DAMPER (DUCTWORK)
BG	BELOW GROUND
BHP	BRAKE HORSEPOWER
BI	BINARY INPUT
BO	BINARY OUTPUT
BOD	BOTTOM OF DUCT
BR	BASEBOARD RADIATOR
BSB	BRANCH SELECTOR BOX (VRF)
BTUH	BRITISH THERMAL UNITS PER HOUR
BV	BINARY VALUE
CC	CEILING CASSETTE / COOLING COIL
CD	CEILING DIFFUSER
CER	CEILING EXHAUST REGISTER
CFM	CUBIC FEET PER MINUTE
CFT	CHEMICAL FEED TANK
CH	CHILLER
CHP	CHILLER PUMP
CLG	CEILING
CND	CONDENSER
COP	COEFFICIENT OF PERFORMANCE
COV	CHANGE OF VALUE
CRAHU	COMPUTER ROOM HANDLING UNIT
CRG	CEILING RETURN GRILLE
CSD	CEILING SUPPLY DIFFUSER
CT	COOLING TOWER
CTG	CEILING TRANSER GRILLE
CU	CONDENSING UNIT
CUH	CABINET UNIT HEATER
Cv	LOSS COEFFICIENT
DB	DRY BULB
DCW	DOMESTIC COLD WATER (POTABLE)
DDC	DIRECT DIGITAL CONTROL
DEG	DEGREE
DIA	DIAMETER
DOAS	DEDICATED OUTSIDE AIR UNIT
DWGS	DRAWINGS
DX	DIRECT EXPANSION
EA	EXHAUST AIR
EAT	ENTERING AIR TEMPERATURE
EC	ELECTRIONICALLY COMMUTATED (MOTOR) / ELECTRIC HEAT COIL
EER	ENERGY EFFICENCY RATIO
EERS	ENGINE EXHAUST REMOVAL SYSTEM
EF	EXHAUST FAN
EFF	EFFECTIVENESS / EFFICIENCY
EH	ELECTRIC HEAT
ERV	ENERGY RECOVERY VENTILATOR
ESP	EXTERNAL STATIC PRESSURE
ET	EXPANSION TANK
ETR	EXISTING TO REMAIN
EWH	ELECTRIC WATER HEATER
EWT	ENTERING WATER TEMPERATURE
F	FAHRENHEIT
FCU	FAN COIL UNIT
FD	FIRE DAMPER

MECHANICAL ABBREVIATIONS

FT	FEET
FT WG	FEET WATER GAUGE
G	NATURAL GAS
GPM	GALLONS PER MINUTE
H	HUMIDIFIER (ELECTRIC)
HGRC	HOT GAS REHEAT COIL (DX)
HGRH	HOT GAS REHEAT
HHWS	HOT HEATING WATER SYSTEM
HP	HEAT PUMP, HORSEPOWER
HR	HOUR / HEAT RECOVERY
HT	HEIGHT
HX	HEAT EXCHANGER
IAW	IN ACCORDANCE WITH
IC	IN CEILING
IDU	INDOOR UNIT (VRF)
IN.	INCH
IWG	INCHES WATER GAUGE
KW	KILOWATT
LBS	POUNDS
LPS	LOW PRESSURE STEAM
LV	LOUVER
LWT	LEAVING WATER TEMPERATURE
MAU	MAKE-UP AIR UNIT
MAX	MAXIMUM
MBH	1,000 BTUH
MCA	MAXIMUM CIRCUIT AMPS
MD	MOTOR OPERATED DAMPER
MIN	MINIMUM
NC	NORMALLY CLOSED, NOISE CRITERIA
NO	NUMBER, NORMALLY OPEN
NP	NOT PROVIDED
OA	OUTSIDE AIR
OAU	OUTSIDE AIR UNIT
OCC	OCCUPANCY
ODU	OUTDOOR UNIT (VRF)
OG	ON GRADE
PA	PRIMARY AIR (VAV TERMINAL)
PH	PHASE
PRV	POWER ROOF VENTILATOR
PSIG	POUNDS PER SQUARE INCH GAUGE
QTY	QUANTITY
RA	RETURN AIR
RD	ROOF DRAIN
RH	RELATIVE HUMIDITY
RL	REFRIGERANT LIQUID
RS	REFRIGERANT SUCTION
RTU	ROOFTOP UNIT
SA	SUPPLY AIR
SAT	SUPPLY AIR TEMPERATURE
SD	STORM DRAIN
SEER	SEASONAL ENERGY EFFICIENCY RATIO
SIM	SIMILAR
SP	STATIC PRESSURE
SQ	SQUARE
SQFT	SQUARE FEET
TAB	TESTING AND BALANCING
TYP.	TYPICAL
UH	UNIT HEATER
UOI	UNLESS OTHERWISE INDICATED
UON	UNLESS OTHERWISE NOTED
V	VOLTS
VAV	VARIABLE AIR VOLUME
VFD	VARIABLE FREQUENCY DRIVE
VRF	VARIABLE REFRIGERANT FLOW
VWV	VARIABLE WATER VOLUME
W	WIDTH
WB	WET BULB
WC	WATER COLUMN (PRESSURE)
WH	WALL HOOD
WPD	WATER PRESSURE DROP
WWM	WELDED WIRE MESH
°	DEGREES
Ø	DIAMETER
Φ	OVAL

DESIGN CONDITIONS

	WINTER				SUMMER					
	INDOOR SETPOINT		OUTDOOR		INDOOR SETPOINT		OUTDOOR (1% DB)		OUTDOOR (1% WB)	
	DB (°F)	RH	DB (°F)	WB (°F)	DB (°F)	RH	DB (°F)	WB (°F)	DB (°F)	WB (°F)
AHU-1, AHU-2, DHP-1	70	-	22	-	75	50	91.9	77.1	87	79
EUH-1, EUH-2, EUH-3, EUH-4, EF-4, EF-5, EF-6, EF-7	55	-	22	-	-	-	91.9	77.1	87	79
EUH-5	68	-	22	-	-	-	91.9	77.1	87	79

SYM	DESCRIPTION	DATE	APPR

SEAL

A/E INFO

APPROVED

FOR COMMANDER NAVFAC

ACTIVITY: Approved by LCDR VINCE DEL GRECO, ROICC with PWD YORKTOWN, via Email.

SATISFACTORY TO DATE 03/26/2026

DES RMD | DRW RZL | CHK FCF

PM/DM MME/JWW

BRANCH MANAGER ALG

CHIEF ENG/ARCH JWJ

FIRE PROTECTION HPN

DEPARTMENT OF THE NAVY
NAVAL FACILITIES ENGINEERING SYSTEMS COMMAND
MID.ANT PDC CORE

NAVAL FACILITIES ENGINEERING SYSTEMS COMMAND - MID-ATLANTIC
NAVAL STATION - NORFOLK, VA

NAVAL WEAPONS STATION YORKTOWN, VIRGINIA
P171 WEAPON MAGAZINES SEGREGATION FACILITIES

MECHANICAL LEGEND, ABBREVIATIONS AND NOTES

SCALE: AS NOTED

EPROJECT NO.: 1737010

CONSTR. CONTR. NO.

NAVFAC DRAWING NO. 12942110

SHEET 434 OF 499

M-001A

DRAWFORM REVISION: 25 AUGUST 2020

4/6/2026 1:08:41 PM M-001A
C:\Users\rachael.duke\Documents\P171-1737010-M-R21-SEG_rachael.duke.rvt

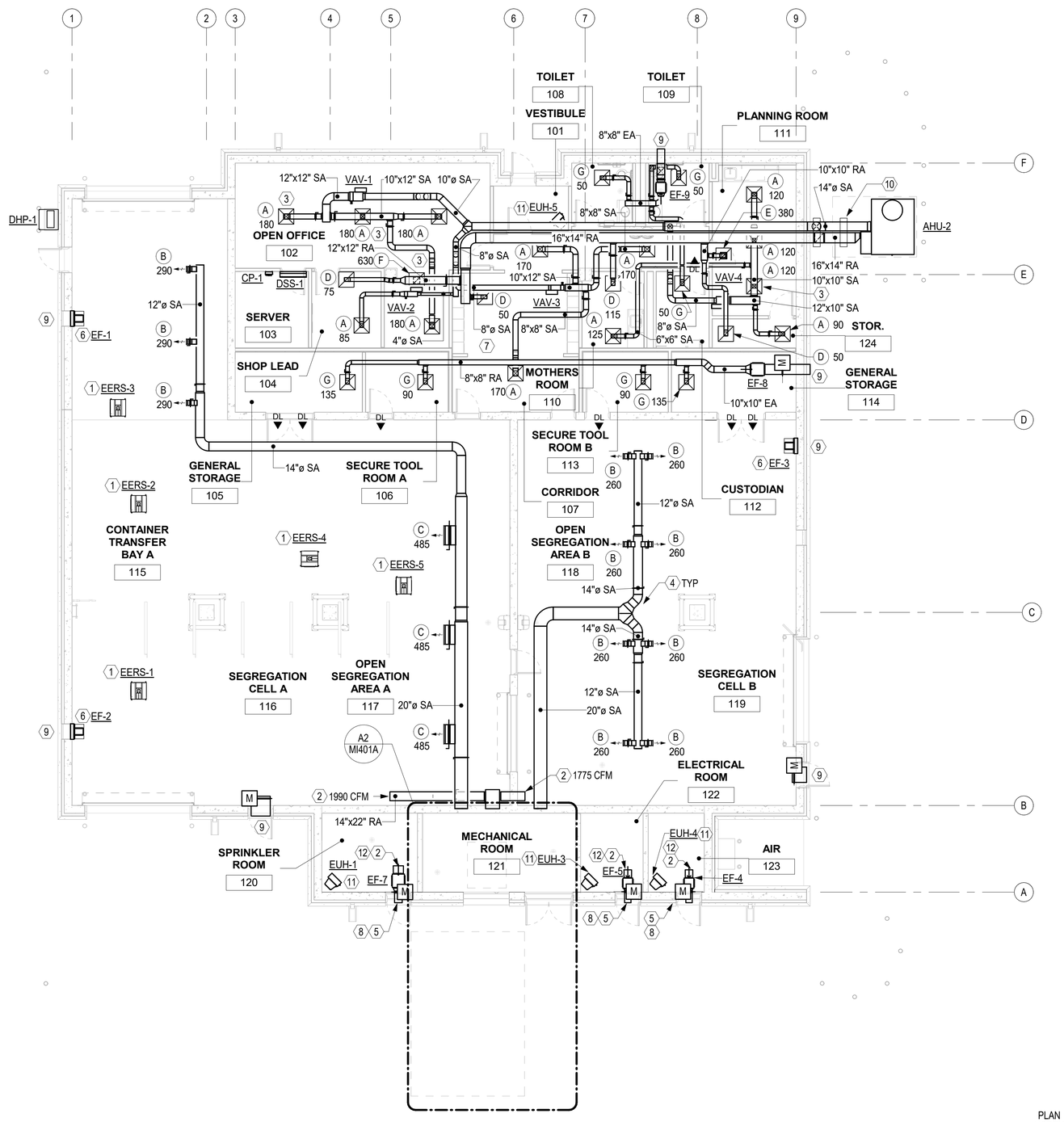

FLOOR PLAN - DUCTWORK

SCALE: 1/8" = 1'-0"

PLAN NORTH — BLDG 1 | PLAN NORTH — BLDG 2

GENERAL NOTES

A CATWALK DESIGN FOR MECHANICAL EQUIPMENT ACCESS IS SHOWN ON SHEET SF101A.

B ALL DUCTWORK GRILLES, DAMPERS, ETC ASSOCIATED WITH AHU-1, ERV-1, AND EF-8 MUST BE PREMANUFACTURED, INSULATED, PAINTED STAINLESS STEEL.

C EXTERIOR DUCTWORK ASSOCIATED WITH AHU-2 MUST BE PREMANUFACTURED INSULATED, PAINTED STAINLESS STEEL.

D ALL EQUIPMENT, DEVICES, AND INSTALLATION METHODS WITHIN 105 GENERAL STORAGE, 106 SECURE TOOL ROOM A, 113 SECURE TOOL ROOM B, 114 GENERAL STORAGE, 115 CONTAINTER TRANSFER BAY A, 116 SEGREGATION CELL A, 117 OPEN SEGREGATION A, 118 OPEN SEGREGATION AREA B, AND 119 SEGREGATION CELL B MUST COMPLY WITH NFPA 70, ARTICLE 502. THIS AREA IS DESIGNATED AS CLASS 2, DIV 1.

KEYNOTES

1 MOUNT EERS UNITS ON UNDERSIDE OF ROOF SLAB. COORDINATE PLACEMENT OF UNITS WITH CATWALK AND OTHER CONSTRUCTION TO ALLOW FOR SERVICING OF UNITS. SEE DETAIL A1, SUSPENDED MECHANICAL EQUIPMENT ON SHEET MI502A.

2 PROVIDE 1/2" STAINLESS STEEL WELDED WIRE MESH AT END OF DUCT RUN.

3 SEE DETAIL B2, SUPPLY AIR DIFFUSER (AHU-2), SHEET MI501A.

4 SEE DETAIL A1, BRANCH CONNECTION, SHEET MI501A.

5 OUTSIDE AIR LOUVER NOT SHOWN FOR CLARITY; SEE ARCHITECTURAL DRAWINGS.

6 OSHA MOTOR SIDE GUARD TO BE FURNISHED AND INSTALLED ON EXHAUST FAN.

7 MEASURE BUILDING PRESSURIZATION AT CORRIDOR 107. THE TEST AND BALANCE CONTRACTOR MUST INCREASE THE RETURN CFM AT AHU-1 SO THAT THE SEGREGATION CELLS ARE -0.02" WC TO THE ADMIN AREA. MEASURE THE SOUND LEVELS IN EACH OCTAVE BAND.

8 SEE DETAIL A4 LOUVER SILL WITH BLANK OFF PANEL AND DETAIL B4 LOUVER HEAD WITH BLANK OFF PANEL, SHEET AE603A

9 SEE DETAIL A5 LOUVER SILL, DETAIL B5 LOUVER JAMB, AND DETAIL C5 LOUVER HEAD, SHEET AE603A

10 SEE DETAIL A2, EXTERIOR DUCT SUPPORT AT CONCRETE PAD SHEET MI501A.

11 SEE DETAIL C1,ELECTRIC UNIT HEATER ON SHEET MI502A.

12 SEE DETAIL B2, INLINE EXHAUST FAN ON SHEET MI502A.

GRAPHIC SCALE(S)

1/8" = 1' - 0" 0 5' 10' 15' 30'

SYM	DESCRIPTION	DATE	APPR

SEAL

A/E INFO

APPROVED

FOR COMMANDER NAVFAC

ACTIVITY: Approved by LCDR VINCE DEL GRECO, ROICC with PWD YORKTOWN, via Email,

SATISFACTORY TO DATE 03/26/2026

DES RMD	DRW RZL	CHK FCF	
PM/DM	MME/JWW		
BRANCH MANAGER	ALG		
CHIEF ENG/ARCH	JWJ		
FIRE PROTECTION	HPN		

DEPARTMENT OF THE NAVY
NAVAL FACILITIES ENGINEERING SYSTEMS COMMAND
MIDLANT PDC CORE

NAVAL FACILITIES ENGINEERING SYSTEMS COMMAND - MID-ATLANTIC
NAVAL STATION - NORFOLK, VA

NAVAL WEAPONS STATION
YORKTOWN, VIRGINIA

P171 WEAPON MAGAZINES
SEGREGATION FACILITIES

FLOOR PLAN - DUCTWORK

SCALE: AS NOTED

EPROJECT NO.: 1737010

CONSTR. CONTR. NO.

NAVFAC DRAWING NO. 12942111

SHEET 435 OF 499

MH101A

DRAWFORM REVISION: 25 AUGUST 2020

4/1/2026 1:49:51 PM MH101A
C:\Users\rachael.duke\Documents\P171-1737010-M-R21-SEG_rachael.duke.rvt

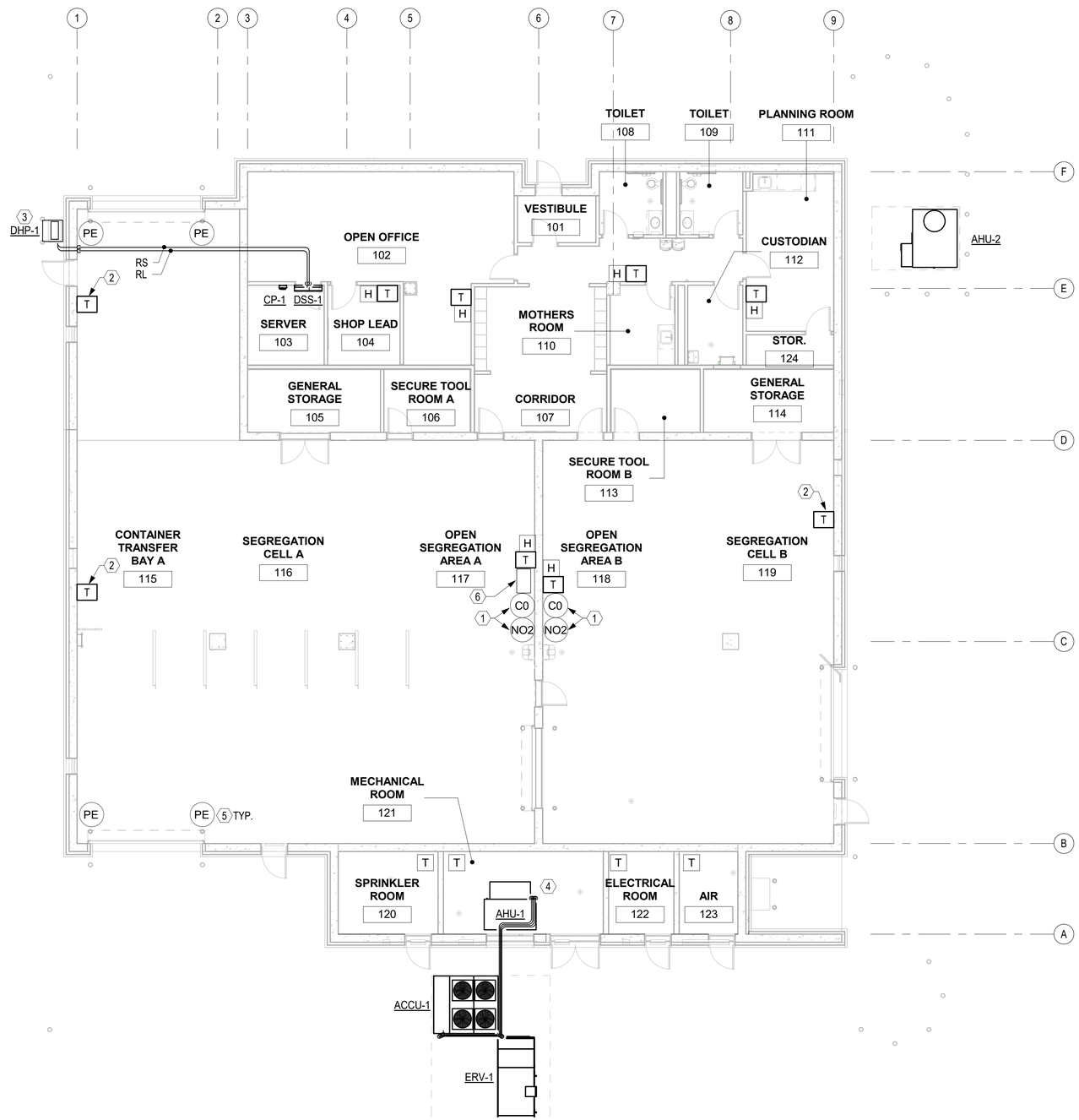

FLOOR PLAN - MECHANICAL PIPING

SCALE: 1/8" = 1'-0"

PLAN NORTH BLDG 1 | PLAN NORTH BLDG 2

GENERAL NOTES

A REFRIGERANT PIPING TO BE SIZED PER MANUFACTURER'S RECOMMENDATIONS.

KEYNOTES

1 CARBON MONOXIDE SENSOR MUST BE MOUNTED 5' ABOVE FINISHED FLOOR. NITROGEN DIOXIDE SENSOR MUST BE MOUNTED 6" AFF.

2 PROVIDE INSULATION BACKING AT THERMOSTAT AND AIR SEAL CONDUIT.

3 SEE DETAIL C4 DUCTLESS SPLIT SYSTEM, SHEET MI502A.

4 ROUTE REFRIGERANT PIPING SO THAT IT DOES NOT INTERFERE WITH THE REQUIRED CLEARANCE SPACE FOR AHU-1.

5 MOUNT PHOTO ELECTRIC SENSOR 5' AFF

6 MOUNT PHOTO ELECTRIC SENSOR CONTROL PANEL 5' AFF

GRAPHIC SCALE(S)

1/8" = 1' - 0" 0 5' 10' 15' 30'

SYM	DESCRIPTION	DATE	APPR

SEAL

A/E INFO

APPROVED

FOR COMMANDER NAVFAC

ACTIVITY: Approved by LCDR VINCE DEL GRECO, ROICC with PWD YORKTOWN, via Email.

SATISFACTORY TO DATE 03/26/2026

DES RMD DRW RZL CHK FCF

PM/DM MME/JWW

BRANCH MANAGER ALG

CHIEF ENG/ARCH JWJ

FIRE PROTECTION HPN

DEPARTMENT OF THE NAVY
NAVAL FACILITIES ENGINEERING SYSTEMS COMMAND
MIDLANT PDC CORE

NAVAL FACILITIES ENGINEERING SYSTEMS COMMAND - MID-ATLANTIC
NAVAL STATION - NORFOLK, VA

NAVAL WEAPONS STATION YORKTOWN, VIRGINIA
P171 WEAPON MAGAZINES
SEGREGATION FACILITIES

FLOOR PLAN - MECHANICAL PIPING

SCALE: AS NOTED

EPROJECT NO.: 1737010

CONSTR. CONTR. NO.

NAVFAC DRAWING NO. 12942112

SHEET 436 OF 499

MP101A

DRAWFORM REVISION: 25 AUGUST 2020

4/1/2026 1:50:00 PM MP101A
C:\Users\rachael.duke\Documents\P171-1737010-M-R21-SEG_rachael.duke.rvt

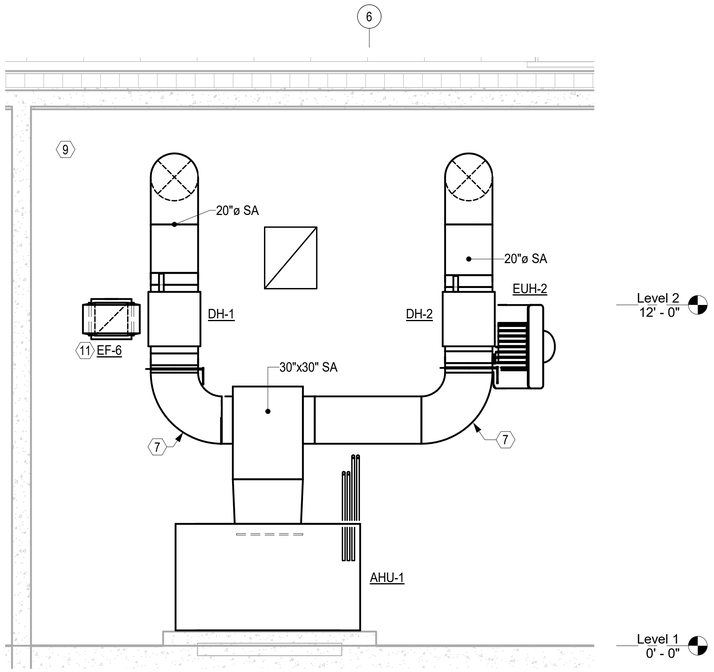

C1 VIEW TOWARDS NORTH WALL OF MECHANICAL ROOM

SCALE: NOT TO SCALE (MI401A)

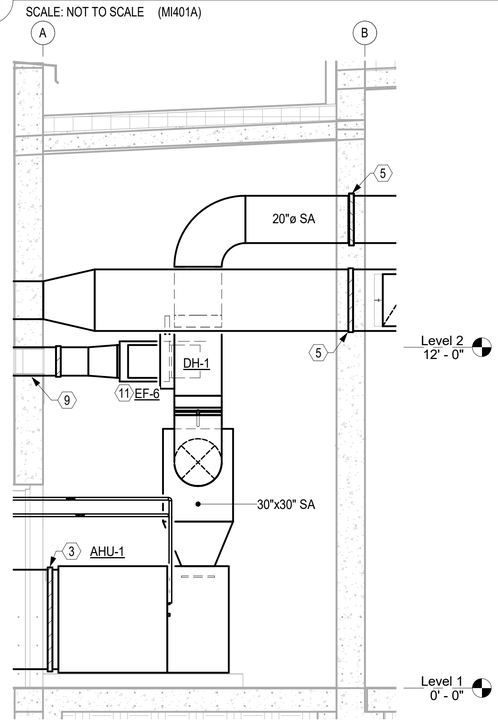

A1 VIEW TOWARDS WEST WALL OF MECHANICAL ROOM

SCALE: NOT TO SCALE (MI401A)

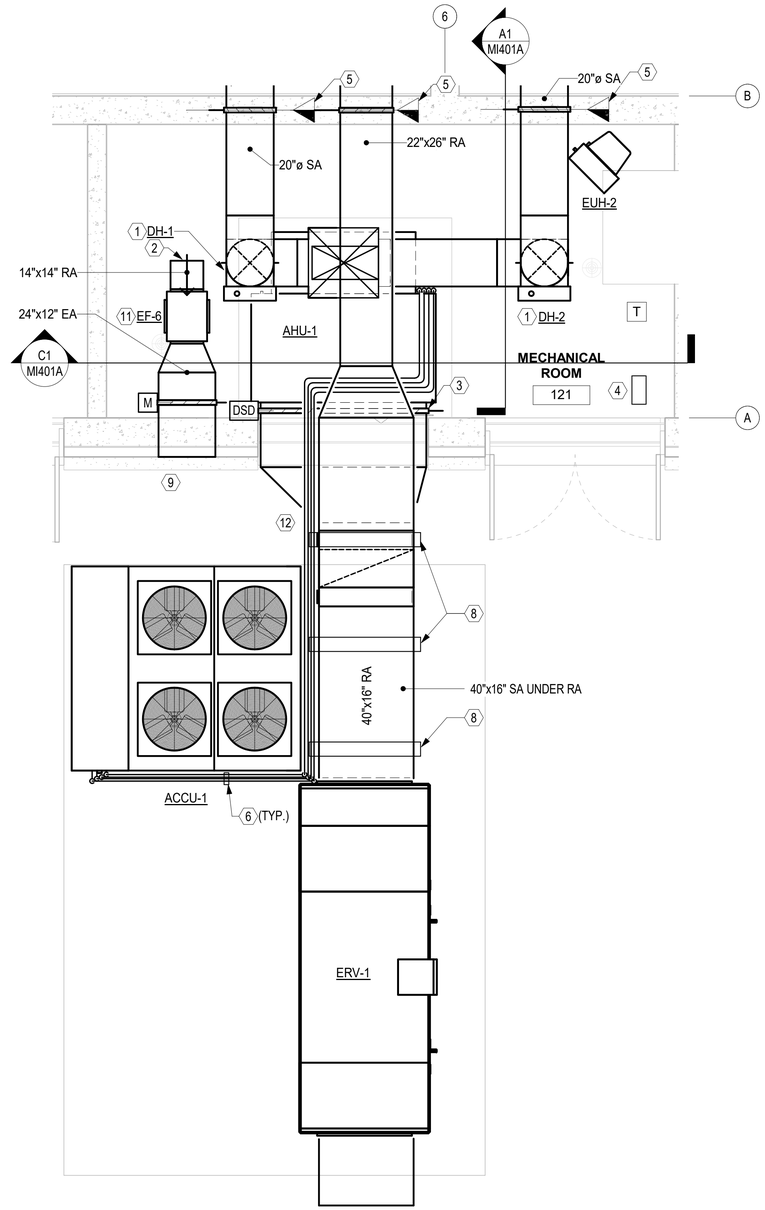

A2 ENLARGED PLAN - DUCTWORK

SCALE: NOT TO SCALE (MH101A)

KEYNOTES

1. DUCT HEATER SHALL BE INSTALLED LESS THAN 12FT ABOVE FINISHED FLOOR.
2. PROVIDE 1/2" WELDED WIRE MESH AT EXHAUST INLET.
3. DUCT SMOKE DETECTOR. SEE CONTROLS - ERU PACKAGED (ERV-1), SHEET MI803A.
4. DDC CONTROL PANEL.
5. SEE DETAIL C4, HORIZONTAL AIRFLOW FIRE DAMPER ON SHEET MI501A. INSTALL FIRE DAMPER ACCESS SO THEY CAN BE ACCESSED AND MAINTAINED FROM THE OPEN SEGREGATION AREAS.
6. SEE DETAIL D5, PIPE SUPPORT ON SHEET MI501A.
7. TURNING VANES AND AIR STRAIGHTENERS MUST BE INSTALLED IN ELBOWS TO STRAIGHTEN OUT AIRFLOW FOR DUCT HEATERS.
8. SEE DETAIL A5, ERV DUCT SUPPORT ON SHEET MI501A.
9. SEE DETAIL A4 LOUVER SILL WITH BLANK OFF PANEL AND DETAIL B4 LOUVER HEAD WITH BLANK OFF PANEL, SHEET AE603A
11. SEE DETAIL B2, INLINE EXHAUST FAN ON SHEET MI502A.
12. ROUTE REFRIGERANT PIPING SO THAT IT DOES NOT INTERFERE WITH THE REQUIRED CLEARANCE SPACES FOR EQUIPMENT.

GRAPHIC SCALE(S)

3/8" = 1' - 0" 0 1' 2' 3' 4' 5' 10'

SYM	DESCRIPTION	DATE	APPR

SEAL

A/E INFO

APPROVED

FOR COMMANDER NAVFAC

ACTIVITY: Approved by LCDR VINCE DEL GRECO, ROICC with PWD YORKTOWN, via Email,

SATISFACTORY TO DATE: 03/26/2026

DES RMD | DRW RZL | CHK FCF

PM/DM: MME/JWW

BRANCH MANAGER: ALG

CHIEF ENG/ARCH: JWJ

FIRE PROTECTION: HPN

DEPARTMENT OF THE NAVY
NAVAL FACILITIES ENGINEERING SYSTEMS COMMAND
MIDLANT PDC CORE

NAVAL FACILITIES ENGINEERING SYSTEMS COMMAND - MID-ATLANTIC
NAVAL STATION - NORFOLK, VA

NAVAL WEAPONS STATION YORKTOWN, VIRGINIA

P171 WEAPON MAGAZINES SEGREGATION FACILITIES

ENLARGED PLANS

SCALE: AS NOTED

EPROJECT NO.: 1737010

CONSTR. CONTR. NO.

NAVFAC DRAWING NO. 12942113

SHEET 437 OF 499

MI401A

DRAWFORM REVISION: 25 AUGUST 2020

4/1/2026 1:49:53 PM MI401A
C:\Users\rachael.duke\Documents\P171-1737010-M-R21-SEG_rachael.duke.rvt

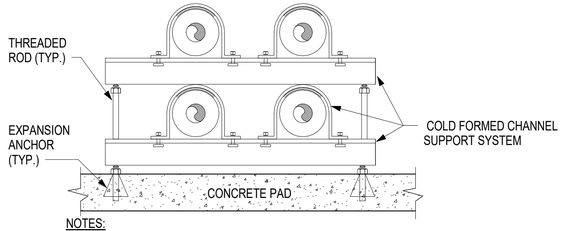

NOTES:
1. PROVIDE FLEXIBLE REFRIGERANT LINES TO PIPE SUPPORT.
2. IF REFRIGERANT LINES FOR ACCU-1/AHU-1 CHANGE SIZE OR LOCATION CONTRACTOR MUST COORDINATE WITH THE ARCHITECT FOR THE AIR BARRIER.

D1 DETAIL - PIPE SUPPORT

SCALE: NOT TO SCALE

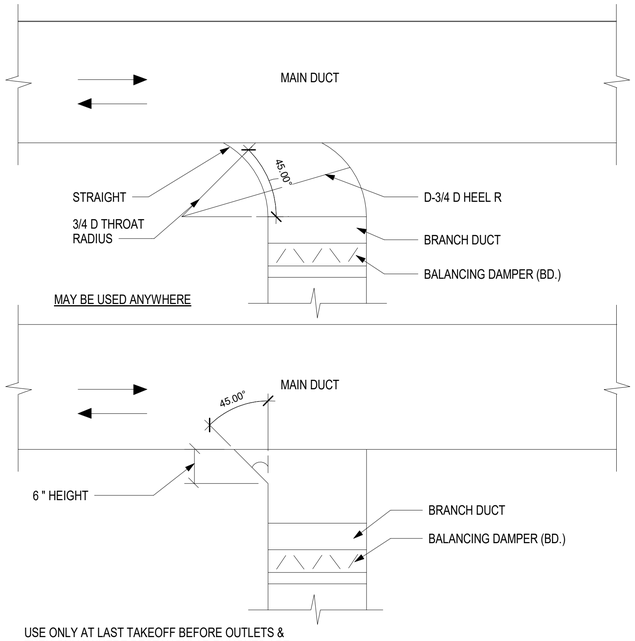

USE ONLY AT LAST TAKEOFF BEFORE OUTLETS & THEN ONLY WHERE RECTANGULAR RUNOUTS ARE INDICATED ON DRAWINGS

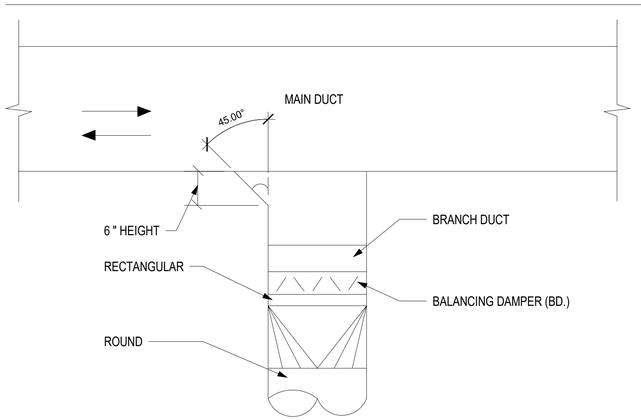

A1 DETAIL - BRANCH CONNECTION

SCALE: NOT TO SCALE

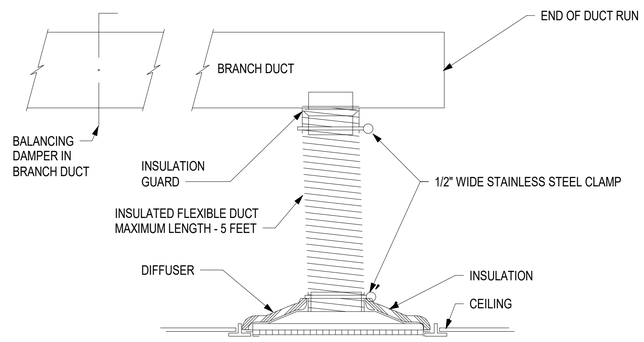

NOTE: BALANCING DAMPER MUST BE A MINIMUM OF 2.5 DUCT DIAMETERS AWAY FROM THE DIFFUSER IN ACCORDANCE WITH SMACNA.

B2 DETAIL - SUPPLY AIR DIFFUSER (AHU-2)

SCALE: NOT TO SCALE

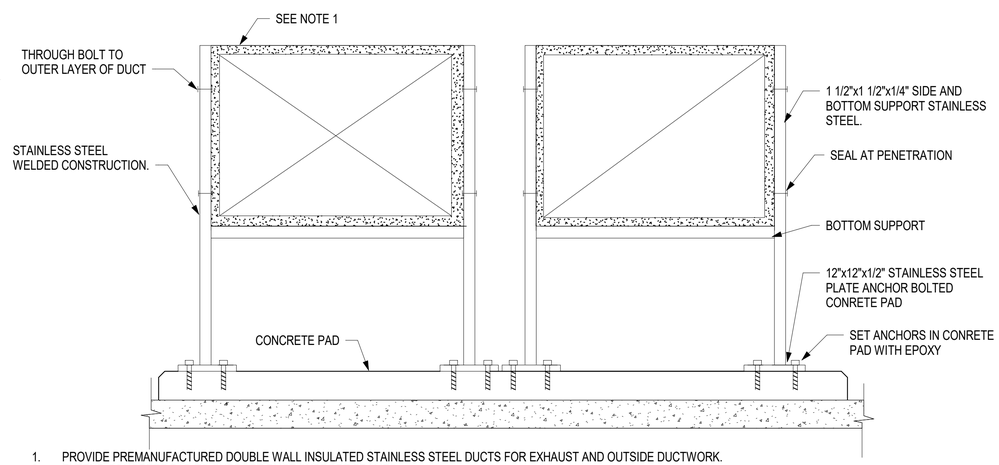

1. PROVIDE PREMANUFACTURED DOUBLE WALL INSULATED STAINLESS STEEL DUCTS FOR EXHAUST AND OUTSIDE DUCTWORK.
2. EXTEND CONCRETE PAD TO SUPPORT DUCT SUPPORT FRAMES.
3. COORDINATE DUCT HEIGHTS TO ALIGN WITH EQUIPMENT CONNECTIONS.

A2 DETAIL - EXTERIOR DUCT SUPPORT (AT CONCRETE PAD)

SCALE: NOT TO SCALE

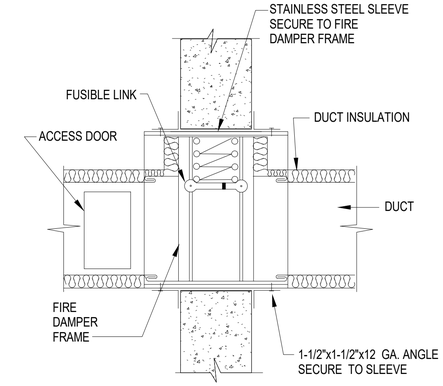

INSTALL FIRE DAMPER IN ACCORDANCE WITH MANUFACTURER'S COMPLETE INSTALLATION DETAILS. DO NOT VARY FROM THOSE INSTRUCTIONS IN ANY WAY. DO NOT FIRESTOP THE GAP BETWEEN THE FIRE DAMPER SLEEVE AND THE PENETRATION UNLESS SPECIFICALLY REQUIRED BY THE FIRE DAMPER MANUFACTURER'S INSTALLATION INSTRUCTIONS. COORDINATE WORK WITH OTHER TRADES.

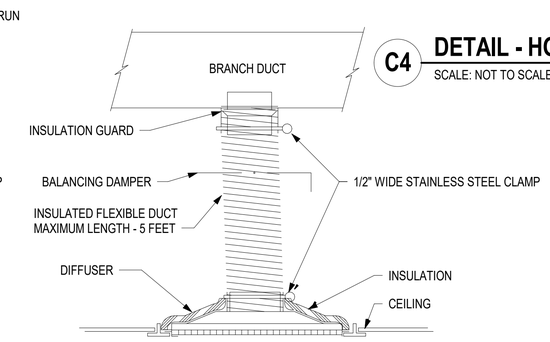

C4 DETAIL - HORIZONTAL AIRFLOW FIRE DAMPER

SCALE: NOT TO SCALE

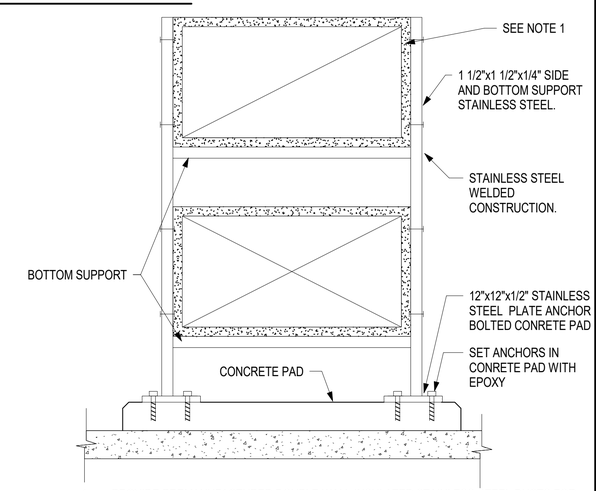

1. PROVIDE PREMANUFACTURED DOUBLE WALL INSULATED STAINLESS STEEL DUCTS FOR EXHAUST AND OUTSIDE DUCTWORK.
2. EXTEND CONCRETE PAD TO SUPPORT DUCT SUPPORT FRAMES.
3. COORDINATE DUCT HEIGHTS TO ALIGN WITH EQUIPMENT CONNECTIONS.

A4 DETAIL - ERV DUCT SUPPORT

SCALE: NOT TO SCALE

SYM	DESCRIPTION	DATE	APPR

SEAL

A/E INFO

APPROVED

FOR COMMANDER NAVFAC

ACTIVITY: Approved by LCDR VINCE DEL GRECO, ROICC with PWD YORKTOWN, via Email,

SATISFACTORY TO DATE 03/26/2026

DES RMD | DRW RZL | CHK FCF

PM/DM MME/JWW

BRANCH MANAGER ALG

CHIEF ENG/ARCH JWJ

FIRE PROTECTION HPN

DEPARTMENT OF THE NAVY
NAVAL FACILITIES ENGINEERING SYSTEMS COMMAND
MIDLANT PDC CORE
NAVAL FACILITIES ENGINEERING SYSTEMS COMMAND - MID-ATLANTIC
NAVAL STATION - NORFOLK, VA
NAVAL WEAPONS STATION YORKTOWN, VIRGINIA
P171 WEAPON MAGAZINES SEGREGATION FACILITIES
MECHANICAL DETAILS

SCALE: AS NOTED

EPROJECT NO.: 1737010

CONSTR. CONTR. NO.

NAVFAC DRAWING NO. 12942114

SHEET 438 OF 499

MI501A

DRAWFORM REVISION: 25 AUGUST 2020

4/1/2026 1:49:54 PM MI501A
C:\Users\rachael.duke\Documents\P171-1737010-M-R21-SEG_rachael.duke.rvt

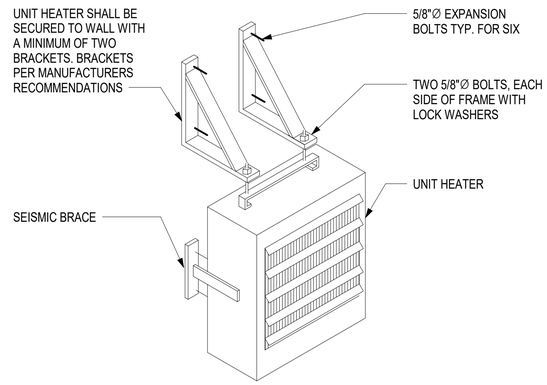

C1 DETAIL - ELECTRIC UNIT HEATER

SCALE: NOT TO SCALE

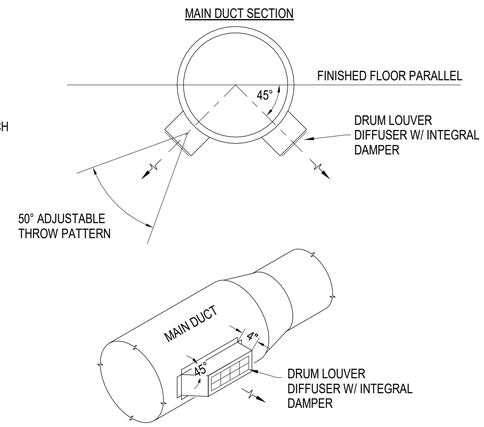

C2 DETAIL - DRUM LOUVER

SCALE: NOT TO SCALE

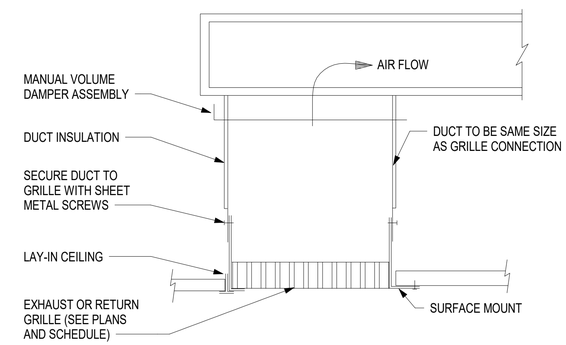

C3 DETAIL - TYPICAL RETURN OR EXHAUST GRILLE DETAIL

SCALE: NOT TO SCALE

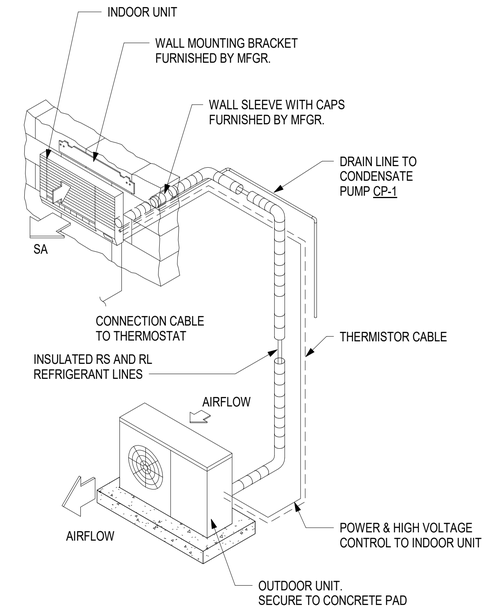

NOTE:
1. UNIT MUST BE SUPPORTED IN ACCORDNACE WITH MANUFACTURER'S INSTRUCTIONS.
2. CASSETTE AND DUCTED STYLE UNIT INSTALLATION SIMILAR.
3. SEE STRUCTURAL DRAWINGS FOR CONCRETE PAD DETAIL.

C4 DETAIL - DUCTLESS SPLIT SYSTEM

SCALE: NOT TO SCALE

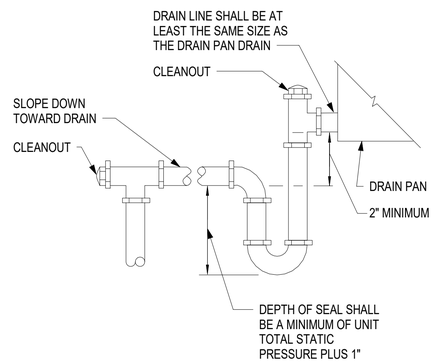

B1 DETAIL - CONDENSATE P-TRAP

SCALE: NOT TO SCALE

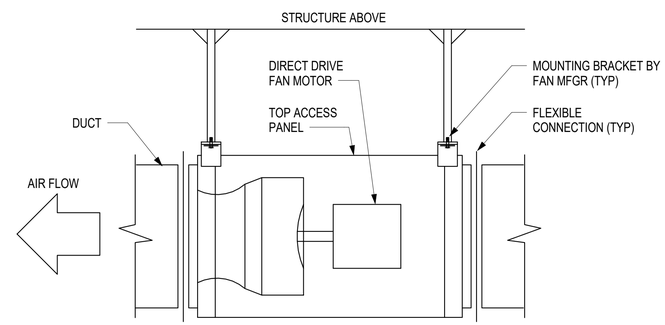

B2 DETAIL - INLINE EXHAUST FAN

SCALE: NOT TO SCALE

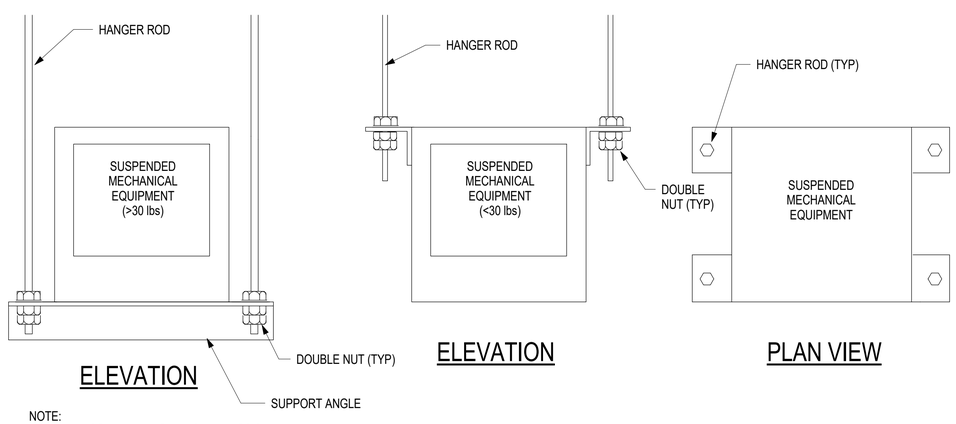

NOTE:
1. ENTIRE ASSEMBLY MUST BE STAINLESS STEEL.

A1 DETAIL - SUSPENDED MECHANICAL EQUIPMENT

SCALE: NOT TO SCALE

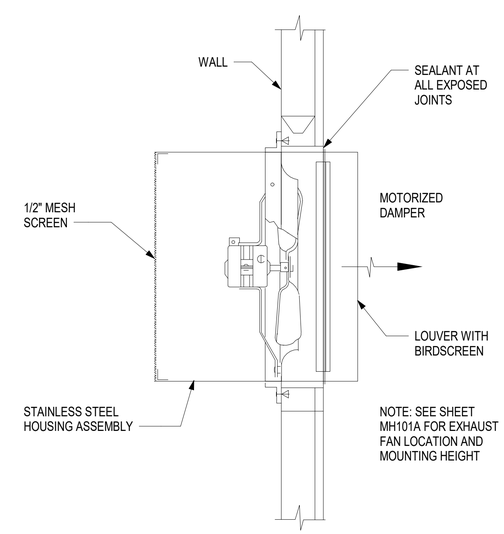

A3 DETAIL - EXHAUST SIDEWALL MOUNTED FAN

SCALE: NOT TO SCALE

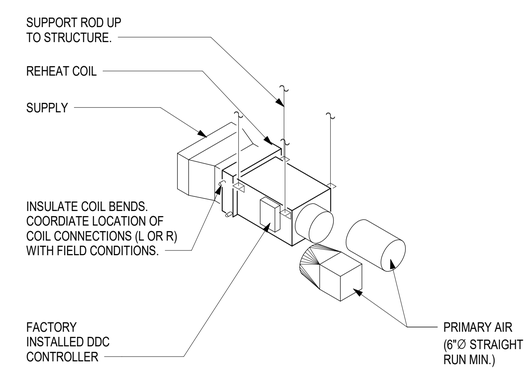

NOTE:
1. INSULATE ALL DUCTWORK CONNECTIONS AND PIPE BENDS WITH SYSTEM REQUIRED INSULATION. ALL CONNECTION COLLARS ARE TO BE FULLY INSULATED AND TAPED

A4 DETAIL - VAV TERMINAL UNIT

SCALE: NOT TO SCALE

SYM	DESCRIPTION	DATE	APPR

SEAL

A/E INFO

APPROVED

FOR COMMANDER NAVFAC

ACTIVITY: Approved by LCDR VINCE DEL GRECO, ROICC with PWD YORKTOWN, via Email,

SATISFACTORY TO DATE: 03/26/2026

DES RMD | DRW RZL | CHK FCF

PM/DM: MME/JWW

BRANCH MANAGER: ALG

CHIEF ENG/ARCH: JWJ

FIRE PROTECTION: HPN

DEPARTMENT OF THE NAVY
NAVAL FACILITIES ENGINEERING SYSTEMS COMMAND
MIDLANT PDC CORE

NAVAL FACILITIES ENGINEERING SYSTEMS COMMAND - MID-ATLANTIC
NAVAL STATION - NORFOLK, VA

NAVAL WEAPONS STATION YORKTOWN, VIRGINIA
P171 WEAPON MAGAZINES SEGREGATION FACILITIES

MECHANICAL DETAILS

SCALE: AS NOTED

EPROJECT NO.: 1737010

CONSTR. CONTR. NO.

NAVFAC DRAWING NO. 12942115

SHEET 439 OF 499

MI502A

DRAWFORM REVISION: 25 AUGUST 2020

4/1/2026 1:49:55 PM MI502A
C:\Users\rachael.duke\Documents\P171-1737010-M-R21-SEG_rachael.duke.rvt

DUCT CONSTRUCTION AND LEAK CLASSIFICATION SCHEDULE

SYSTEM	TYPE OF PRESSURE	SMACNA PRESSURE CLASS (IN WC)	SEAL CLASSIFICATION PER SMACNA	TYPE OF DUCTWORK		LEAKAGE CLASS
				SHAPE	MATERIAL	
SUPPLY AIR DUCTWORK:						
FROM VAV AIR HANDLING UNIT TO INLET OF VAV TERMINAL UNIT	POSITIVE	+3	A	RECTANGULAR	G90 GALV. STEEL	8
				ROUND & FLAT OVAL	G90 GALV. STEEL	4
FROM VAV TERMINAL UNIT TO SUPPLY OUTLETS	POSITIVE	+2	A	RECTANGULAR	G90 GALV. STEEL	16
				ROUND & FLAT OVAL	G90 GALV. STEEL	8
FROM ENERGY RECOVERY UNIT TO AIR HANDLING UNIT	POSITIVE	+2	A	RECTANGULAR	G90 GALV. STEEL	8
				ROUND & FLAT OVAL	G90 GALV. STEEL	4
RETURN AIR DUCTWORK:						
ALL RETURN AIR DUCTWORK	NEGATIVE	-2	A	RECTANGULAR	G90 GALV. STEEL	8
				ROUND & FLAT OVAL	G90 GALV. STEEL	4
OUTSIDE AIR/TRANSFER/RELIEF:						
DUCTWORK UNDER POSITIVE CONDITIONS	POSITIVE	+2	A	RECTANGULAR	G90 GALV. STEEL	8
				ROUND & FLAT OVAL	G90 GALV. STEEL	4
DUCTWORK UNDER NEGATIVE CONDITIONS	NEGATIVE	-2	A	RECTANGULAR	G90 GALV. STEEL	8
				ROUND & FLAT OVAL	G90 GALV. STEEL	4

REMARKS:
1. ROOM NUMBERS 116, 117, 118 AND 119 MUST HAVE PREINSULATED MANUFACTURED DUCTWORK. SEE SECTION 2330 00, HVAC AIR DISTRIBUTION.

AIR COOLED CONDENSER SCHEDULE

MARK	LOCATION	UNIT SERVED	AMB (°FDB)	HOT GAS REHEAT		ELECTRICAL DATA						NOMINAL TONS	NUMBER OF COMPRESSORS	REMARKS
				EAT (DB/WB)	LAT (DB/WB)	kW	V	PH	MCA	MOCP	EER			
ACCU-1	SOUTH SIDE OF BUILDNG	AHU-1	95	53.4F/53.2F	74.1F/61.2F	25.6	460	3	46.7	60	13.3	25	2	1

REMARKS:
1. VARIABLE SPEED COMPRESSOR

SPLIT SYSTEM INDOOR UNIT SCHEDULE

MARK	LOCATION	SUPPLY AIR (CFM)	OUTSIDE AIR (CFM)	ESP (IN WC)	HOT GAS REHEAT (MBH)	COOLING						ELECTRICAL DATA					REMARKS
						TOTAL CAPACITY (MBH)	SENSIBLE CAPACITY (MBH)	INDOOR EAT (°F)		REHEAT COIL (°F)		MCA (A)	MOCP (A)	SERVICE			
								DB	WB	DB	WB			V	PH	HZ	
AHU-1	121 MEHCANICAL ROOM	4400	4400	2.5	98.4	289.7	120.6	78.7	73.5	74.1	61.2	8.8	15	460	3	60	1, 2, 3, 4, 5

REMARKS:
1. PROVIDE UV LIGHTS.
2. PROVIDE INNER (INCLUDING COMPONENTS) AND OUTER CABINET, REHEAT COILS, EVAPORATOR COILS, AND CONDENSER COILS WITH OFF-SITE INSTALLED PROTECTIVE COATING RATED FOR 10000 HOUR SALT SPRAY TEST.
3. 2" MERV 8 PREFILTER AND 4" MERV 13 FILTER FOR OUTSIDE AIR.
4. UNIT TO BE SELECTED AND TAB PERFORMED WITH DIRTY FILTER CONDITIONS IN ADDITION TO CLEAN CONDITION.
5. PROVIDE WITH INVERTER SCROLL COMPRESSOR

ENGINE EXHAUST REMOVAL SYSTEM

MARK	LOCATION	HP	V	PH	HZ	REMARKS
EERS-1	CONTAINER TRANSFER BAY A	3/4	208	1	60	1,2,3,4
EERS-2	CONTAINER TRANSFER BAY A	3/4	208	1	60	1,2,3,4
EERS-3	CONTAINER TRANSFER BAY A	3/4	208	1	60	1,2,3,4
EERS-4	SEGREGATION CELL A	3/4	208	1	60	1,2,3,4
EERS-5	SEGREGATION CELL A	3/4	208	1	60	1,2,3,4

REMARKS:
1. FULLY-AUTOMATED, SELF-CONTAINED, HOSELESS SYSTEM.
2. REQUIRES NO STRUCTURAL MODIFICATIONS.
3. REQUIRES NO EXHAUSTING TO OUTDOORS.
4. CEILING HUNG.

CONDENSATE PUMP

MARK	SERVICE	LOCATION	GPM	HEAD (FT OF H20)	V	PH	HZ	REMARKS
CP-1	DSS-1	103 SERVER	2.5	1	120	1	60	1

REMARKS:
1. PROVIDE WITH THE DUCTLESS SPLIT SYSTEM.

ELECTRIC DUCT HEATER SCHEDULE

TAG	SERVING	DUCT SIZE	HEATING CAPACITY (KW)	AIRFLOW (CFM)	ELECTRICAL DATA				REMARKS
					MCA (A)	SERVICE			
						V	PH	HZ	
DH-1	AHU-1	20x20	20.0	2,320	24	480	3	60	1
DH-2	AHU1	20x20	20.0	2,080	24	480	3	60	1

1. DUCT HEATERS MUST BE SCR (SILICON CONTROLLED RECTIFIER) CONTROLLED.

UNIT HEATER SCHEDULE

MARK	LOCATION	MBH CAPACITY	NO. OF STAGES	CFM	ELECTRICAL DATA		REMARKS
					V	HZ	
EUH-1	120	4	1	160	208	60	
EUH-2	121	4	1	160	208	60	
EUH-3	122	4	1	160	208	60	
EUH-4	123	4	1	160	208	60	
EUH-5	101	4	1	160	208	60	

EXHAUST FAN SCHEDULE

MARK	LOCATION	TYPE	CFM	ESP (IN.WG)	FAN DATA		ELECTRICAL DATA				REMARKS
					RPM	MAX SONES	HP	V	PH	Hz	
EF-1	115	PROPELLER	1300	0.10	578	4.1	1/4	115	1	60	3,4
EF-2	115	PROPELLER	1300	0.10	578	4.1	1/4	115	1	60	3,4
EF-3	119	PROPELLER	1380	0.10	589	4.2	1/4	115	1	60	3,4
EF-4	123	INLINE	255	0.30	1300	5.5	1/25	115	1	60	1,2
EF-5	122	INLINE	320	0.30	1300	5.5	1/25	115	1	60	1,2
EF-6	121	INLINE	655	0.31	1140	5.9	1/6	115	1	60	1,2
EF-7	120	INLINE	435	0.33	860	3.2	1/8	115	1	60	1,2
EF-8	114	INLINE	450	0.33	860	3.2	1/8	115	1	60	1,2,4
EF-9	109	INLINE	150	0.30	1300	5.5	1/25	115	1	60	1,2

REMARKS:
1. DIRECT DRIVE.
2. PROVIDE A UNIT MOUNTED SPEED CONTROLLER.
3. PROVIDE WITH STAINLESS STEEL OSHA MOTOR GUARD.
4. ENTIRE ASSEMBLY INCLUDING DAMPER MATERIALS MUST BE 304 STAINLESS STEEL.

SINGLE ZONE DUCTLESS SPLIT SYSTEM HEAT PUMP SCHEDULE

MARK	LOCATION	OUTDOOR UNIT				ELECTRICAL DATA					INDOOR UNIT				REMARKS
		COOLING CAPACITY (MBH)	SEER	HEATING CAPACITY AT 47°F (MBH)	OPERATING RANGE (°F)	MCA	MOCP	V	PH	Hz	AIR FLOW CFM (H/M/L)	ELECTRICAL DATA			
												V	PH	Hz	
DSS-1	103 SERVER	24	16	2.84	32 (°F) - 115 (°F)	14.00	15.0	208	1	60	530/431/353	208	1	60.0	1,2,3,4,5,6,7

REMARKS:
1. INDOOR UNIT IS POWERED THROUGH THE OUTDOOR UNIT.
2. PROVIDE WITH INVERTOR DRIVEN COMPRESSOR.
3. PROVIDE HEAT PUMP WITH DEFROST FUNCTION.
4. PROVIDE ALL INDOOR UNITS WITH DISCONNECT SWITCH.
5. PROVIDE INNER (INCLUDING COMPONENTS) AND OUTTER CABINET OUTDOOR UNITS WITH OFF-SITE INSTALLED PROTECTIVE COATING, RATED FOR 10000 HOUR SALT SPRAY TEST.
6. PROVIDE MANUFACTURER SPECIFIC CONDENSATE PUMP ACCESSORY WITH 23" OF LIFT.
7. PROVIDE WITH BASIN HEATER.

VAV BOX WITH ELECTRIC COIL SCHEDULE

MARK	TYPE	SIZE	AIRFLOW (CFM)		MIN STATIC PRESSURE	(kW) CAPACITY	ELECTRICAL DATA			REMARKS
		INLET SIZE	MIN	MAX			V	PH	HZ	
VAV-1	VAV SINGLE DUCT	10"	360	720	0.02	6.0	277	1	60	1
VAV-2	VAV SINGLE DUCT	4"	45	85	0.01	1.0	277	1	60	1
VAV-3	VAV SINGLE DUCT	8"	255	510	0.02	4.0	277	1	60	1
VAV-4	VAV SINGLE DUCT	8"	260	520	0.02	4.0	277	1	60	1

REMARKS:
1. ELECTRIC HEAT MUST HAVE SCR (SILICON CONTROLLED RECTIFIER) CONTROLLER.

VAV PACKAGED UNIT WITH HEAT PUMP AND SUPPLEMENTAL ELECTRIC HEAT SCHEDULE

MARK	LOCATION	SUPPLY AIR (CFM)	OA (CFM)	ESP (IN WG)	COOLING						HEATING			ELECTRICAL DATA					WEIGHT (LBS)	REMARKS
					TOTAL CAPACITY (BTUH)	SENSIBLE CAPACITY (BTUH)	INDOOR EAT (°F)		INDOOR LAT (°F)		HEAT PUMP CAPACITY @ 47°F (BTUH)	EAT DB (°F)	LAT DB	MCA (A)	MOCP (A)	V	PH	Hz		
							DB (°F)	WB (°F)	DB (°F)	WB (°F)										
AHU-2	PLAN EAST	1835	500	2.00	74602.0	52056.0	80.0	67.0	53.6	53.5	66000	60	91.5	41.00	45.0	460	3	60	1386	1, 2, 3, 4, 5

REMARKS:
1. PROVIDE UV LIGHTS.
2. PROVIDE INNER (INCLUDING COMPONENTS) AND OUTER CABINET, EVAPORATOR COILS, AND CONDENSER COILS WITH OFF-SITE INSTALLED PROTECTIVE COATING RATED FOR 10000 HOUR SALT SPRAY TEST.
3. PROVIDE WITH INVERTER SCROLL COMPRESSOR.
4. 2" MERV 8 PREFILTER IN FRONT OF OUTSIDE AIR AFMS PER MANUFACTURER CLEARANCE. 2" MERV 8 PREFILTER AND 4" MERV 13 FILTER IN FRONT OF COIL.
5. UNIT TO BE SELECTED AND TAB PERFORMED WITH DIRTY FILTER CONDITIONS IN ADDITION TO CLEAN CONDITION.

ENERGY RECOVERY VENTILATOR SCHEDULE

MARK	SERVING	SUPPLY FAN				EXHAUST FAN				ENTHALPY WHEEL														ELECTICAL DATA						WEIGHT (LBS)	REMARKS
										OUTDOOR AIR								EXHAUST AIR													
											SUMMER				WINTER				SUMMER				WINTER								
											EAT		LAT		EAT		LAT		EAT		LAT		EAT		LAT						
		DESIGN AIRFLOW (CFM)	ESP (IN WC)	SPEED (RPM)	MOTOR SIZE (HP)	DESIGN AIRFLOW EA (CFM)	ESP (IN WC)	FAN SPEED (RPM)	MOTOR SIZE (HP)	DESIGN AIRFLOW (CFM)	DB (°F)	WB (°F)	DB (°F)	WB (°F)	DB (°F)	WB (°F)	DB (°F)	WB (°F)	DESIGN AIRFLOW (CFM)	DB (°F)	WB (°F)	DB (°F)	WB (°F)	DB (°F)	WB (°F)	DB (°F)	WB (°F)	FLA (A)	MCA (A)	MOCP (A)	V	PH	Hz		
ERV-1	AHU-1	4400	2.19	1720	4.56	3765	2.23	1727	4.56	4400	91.9	77.1	78.7	76.8	22.0	19.4	61.6	40.8	3765	75.0	62.5	91.3	67.7	70.0	62.5	33.4	31.0	11.8	13.07	15.0	460	3	60	2651.00	1, 2, 3

REMARKS:
1. PROVIDE INNER (INCLUDING COMPONENTS) AND OUTER CABINET WITH OFF-SITE INSTALLED PROTECTIVE COATING RATED FOR 10000 HOUR SALT SPRAY TEST.
2. 2" MERV 8 FILTER AND 4" MERV 13 FILTER
3. UNIT TO BE SELECTED AND TAB PERFORMED WITH DIRTY FILTER CONDITIONS IN ADDITION TO CLEAN CONDITION.
4. ALL DEVICES AND INSTALLATION METHODS MUST COMPLY WITH NFPA 70, ARTICLE 502. THE AREA ERV-1 SERVES IS DESIGNATED AS CLASS 2, DIV 1.

AIR DEVICE SCHEDULE

MARK	SYSTEM	DESCRIPTION	MOUNTING TYPE	MATERIAL	NECK SIZE			SHELL SIZE			AIRFLOW		MAX. APD IN WC	THROW @ 50 FPM (FT.)	NC	REMARKS
					WIDTH IN.	LENGTH IN.	DIA. IN.	WIDTH IN.	LENGTH IN.	DIA. IN.	MIN. CFM	MAX. CFM				
A	SUPPLY	HIGH PERFORMANCE DIFFUSER	LAY-IN	STEEL	-	-	6	24	24	-	50	240	0.05	11	28	-
B	SUPPLY	DRUM LOUVER	SPIRAL DUCT	STAINLESS STEEL	9	6	-	11	8	-	130	305	0.22	31	29	-
C	SUPPLY	DRUM LOUVER	SPIRAL DUCT	STAINLESS STEEL	30	6	-	32	8	-	415	960	0.22	56	29	-
D	RETURN	PERFORATED FLUSH FACE	LAY-IN	STEEL	6	6	-	24	24	-	50	150	0.13	-	14	-
E	RETURN	PERFORATED FLUSH FACE	LAY-IN	STEEL	10	10	-	24	24	-	210	420	0.13	-	21	-
F	RETURN	PERFORATED FLUSH FACE	LAY-IN	STEEL	15	15	-	24	24	-	470	940	0.13	-	26	-
G	EXHAUST	PERFORATED FLUSH FACE	LAY-IN	STEEL	6	6	-	24	24	-	50	150	0.13	-	14	1,2

REMARKS:
1. PROVIDE T BAR PLASTER FRAME IN HARD CEILINGS AS REQUIRED.
2. STEEL EXCEPT AS NOTED.

SYM	DESCRIPTION	DATE	APPR

SEAL

A/E INFO

APPROVED
FOR COMMANDER NAVFAC

ACTIVITY: Approved by LCDR VINCE DEL GRECO, ROICC with PWD YORKTOWN, via Email,
SATISFACTORY TO DATE 03/26/2026

DES RMD	DRW RZL	CHK FCF	
PM/DM	MME/JWW		
BRANCH MANAGER	ALG		
CHIEF ENG/ARCH	JWJ		
FIRE PROTECTION	HPN		

DEPARTMENT OF THE NAVY
NAVAL FACILITIES ENGINEERING SYSTEMS COMMAND
MIDLANT PDC CORE
NAVAL FACILITIES ENGINEERING SYSTEMS COMMAND - MID-ATLANTIC
NAVAL STATION - NORFOLK, VA
NAVAL WEAPONS STATION YORKTOWN, VIRGINIA
P171 WEAPON MAGAZINES SEGREGATION FACILITIES
MECHANICAL SCHEDULES

SCALE: AS NOTED
EPROJECT NO.: 1737010
CONSTR. CONTR. NO.
NAVFAC DRAWING NO. 12942116
SHEET 440 OF 499
MI601A

DRAWFORM REVISION: 25 AUGUST 2020

4/1/2026 1:49:57 PM MI601A
C:\Users\rachael.duke\Documents\P171-1737010-M-R21-SEG_rachael.duke.rvt

UTILITY METERING POINTS LIST

CONTROL MARK	POINTS NAME	TYPE	GRAPHICS
B1	ELECTRIC METER (kW)	AI	BLDG.
B2	WATER METER (GPM)	AI	BLDG.

SEQUENCE OF OPERATION

THE ADVANCED METERING INFRASTRUCTURE (AMI) SYSTEM AND DDC SYSTEM MUST BOTH MONITOR ELECTRIC AND WATER DATA FROM THE ELECTRIC METER.

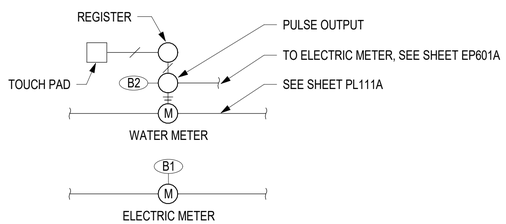

B1 CONTROLS - UTILITY METERING

SCALE: NOT TO SCALE

DSS-1 POINT LIST

CONTROL MARK	POINTS NAME	TYPE	ALARMS		GRAPHICS	TREND
			ALARM LO	ALARM HIGH		
C1	ROOM TEMPERATURE	AI		X	X	X
C2	ROOM SETPOINT	AI			X	
C3	CONDENSATE ALARM	BI		X	X	

SEQUENCE OF OPERATION

MINISPLIT UNIT MUST OPERATE UNDER MANUFACTURER'S CONTROLS TO MAINTAIN INDOOR DESIGN TEMPERATURE, AS SHOWN ON CONTRACT DRAWING M-001 IF THE ROOM TEMPERATURE EXCEEDS SETPOINT FOR A PERIOD OF 10 MINUTES (ADJ.) AN ALARM MUST BE SENT TO THE BAS.

CONDENSATE PUMP:
THE ONBOARD CONDENSATE PUMP MUST OPERATE UNDER ITS OWN CONTROLS. WHEN THE INTERNAL FLOAT REACHES ITS MAXIMUM LEVEL, IT MUST CUT POWER SUPPLY TO THE UNIT AND AN ALARM MUST BE SENT TO THE BAS.

BASIN HEATER:
THE BASIN HEATER MUST ACTIVIATE IF COMPRESSOR IS OPERATING IN HEATING MODE AND AT AN OUTDOOR AMBIENT AIR TEMPERATURE OF 36F OR BELOW.

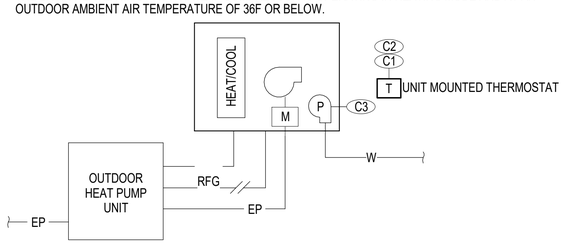

A1 CONTROLS - MINISPLIT HEAT PUMP (DSS-1)

SCALE: NOT TO SCALE

EXHAUST FAN AND UNIT HEATER POINT LIST

CONTROL MARK	POINTS NAME	TYPE	ALARMS		GRAPHICS	TREND
			ALARM LO	ALARM HIGH		
D1	ROOM TEMPERATURE	AI	X		X	X

SEQUENCE OF OPERATION

PROVIDE A COMBINATION OF STARTERS, RELAYS, AND CONTACTS FOR THERMOSTATIC EQUIPMENT OPERATION. THE EQUIPMENT MUST BE CONTINUOUSLY ENABLED TO MECHANICALLY VENTILATE WHEN ZONE TEMPERATURE IS ABOVE SETPOINT OF 80°F (ADJ.) OR HEAT THE SPACE WHEN ZONE TEMPERATURE IS BELOW 55°F (ADJ.). THE THERMOSTAT MUST PROVIDE A DEADBAND TO PREVENT THE EXHAUST FAN AND UNIT HEATER FROM OPERATING AT THE SAME TIME.

COOLING DEMAND:
ON A DEMAND FOR COOLING FROM THE THERMOSTAT, THE EXHAUST AND MAKEUP AIR DAMPERS MUST OPEN AND THE EXHAUST FAN MUST ENERGIZE. WHEN THE DEMAND FOR COOLING IS SATISFIED, DAMPERS MUST CLOSE AND THE FAN MUST DE-ENERGIZE.

HEATING DEMAND:
THE UNIT HEATER FAN MUST RUN ANYTIME THE ZONE TEMPERATURE DROPS BELOW HEATING SETPOINT. ON A RISE OF SPACE TEMPERATURE ABOVE THE SETPOINT, THE FAN MUST DE-ENERGIZE.

ALARM:
IF THE ROOM TEMPERATURE IS BELOW SETPOINT FOR A PERIOD OF 10 MINUTES (ADJ.) AN ALARM MUST BE SENT TO THE BAS.

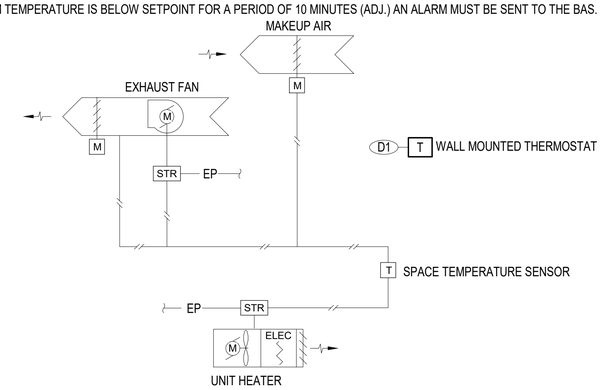

A2 CONTROLS - EXHAUST FAN AND ELECTRIC UNIT HEATER (EF-4, EF-5, EF-6, EF-7, EUH-1, EUH-2, EUH-3, EUH-4)

SCALE: NOT TO SCALE

CONTROL LEGEND

- CONTROL WIRE
- EP — ELECTRICAL POWER
- M — MOTOR
- TS — IMMERSION TEMPERATURE SENSOR
- TS — AVERAGING TEMPERATURE SENSOR
- AMS — AIRFLOW MEASURING STATION
- C02 — CARBON DIOXIDE SENSOR
- CO — CARBON MONOXIDE SENSOR
- CR — CURRENT RELAY
- DM — DAMPER ACTUATOR
- DPS — DIFFERENTIAL PRESSURE SENSOR
- DS — DISCONNECT SWITCH
- $ — EMERGENCY SHUTOFF SWITCH
- FM — FLOW METER
- FS — FLOW SWITCH
- GM — GATEWAY MODULE
- H — HUMIDITY SENSOR
- LL — LOW LIMIT (FREEZESTAT)
- MD — MOISTURE DETECTOR
- M — MOTOR
- NO2 — NITROGEN DIOXIDE SENSOR
- OS — OCCUPANCY SENSOR
- S — ON/OFF SWITCH
- PS — POSITION SWITCH
- PT — PRESSURE TRANSMITTER
- R — RELAY
- SS — SMART SWITCH
- SD — SMOKE DETECTOR
- STR — STARTER
- SL — STATIC PRESSURE LIMIT SENSOR
- C02 — CARBON DIOXIDE SENSOR
- TM — THERMOMETER
- T — THERMOSTAT
- T — THERMOSTAT
- UC — UNIT CONTROLLER
- VFD — VARIABLE FREQUENCY DRIVE
- WS — WALL SWITCH
- WL — WATER LEVEL SENSOR

SYM	DESCRIPTION	DATE	APPR

SEAL

A/E INFO

APPROVED
FOR COMMANDER NAVFAC

ACTIVITY
Approved by LCDR VINCE DEL GRECO, ROICC with PWD YORKTOWN, via Email,

SATISFACTORY TO DATE 03/26/2026

DES RMD | DRW RZL | CHK FCF
PM/DM MME/JWW
BRANCH MANAGER ALG
CHIEF ENG/ARCH JWJ
FIRE PROTECTION HPN

DEPARTMENT OF THE NAVY
NAVAL FACILITIES ENGINEERING SYSTEMS COMMAND
MIDLANT PDC CORE
NAVAL FACILITIES ENGINEERING SYSTEMS COMMAND - MID-ATLANTIC
NAVAL STATION - NORFOLK, VA
NAVAL WEAPONS STATION
YORKTOWN, VIRGINIA
P171 WEAPON MAGAZINES
SEGREGATION FACILITIES
MECHANICAL CONTROLS

SCALE: AS NOTED
EPROJECT NO.: 1737010
CONSTR. CONTR. NO.
NAVFAC DRAWING NO. 12942117
SHEET 441 OF 499
MI801A

DRAWFORM REVISION: 25 AUGUST 2020

4/1/2026 1:49:57 PM MI801A
C:\Users\rachael.duke\Documents\P171-1737010-M-R21-SEG_rachael.duke.rvt

SEQUENCE OF OPERATION

RUN CONDITIONS - ENABLED

THE UNITS MUST OPERATE UNDER MANUFACTURER'S CONTROLS AND MUST BE INTERLOCKED TOGETHER. THE FAN IS ENABLED TO MECHANICALLY VENTILATE WHEN THE CARBON MONOXIDE SENSOR IS ACTIVATED OR WHEN VEHICLE MOVEMENT OR OVERHEAD DOOR MOVEMENT IS SENSED BY THE PHOTOELECTRIC EYE/DOOR SWITCH. IF THE CARBON MONOXIDE IN THE SPACE EXCEEDS 40 PARTS PER MILLION (ADJ.) AN ALARM MUST BE SENT TO THE BAS. THERE MUST BE A CARBON MONOXIDE SENSOR IN OPEN SEGREGATION CELL A (ROOM NO. 117) AND OPEN SEGREGATION AREA B (ROOM NO. 118).

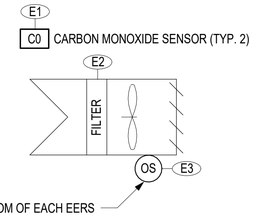

EERS-1, EERS-2, EERS-3, EERS-4, EERS-5 POINTS LIST

CONTROL MARK	POINTS NAME	TYPE	ALARMS		GRAPHICS	TREND
			ALARM LO	ALARM HIGH		
E1	CARBON MONOXIDE SENSOR	AI		X	X	X
E2	FILTER STATUS	AI		X	X	X
E3	OCCUPANCY SENSOR	AI			X	X

D1 CONTROLS - ENGINE EXHAUST REMOVAL SYSTEM (EERS-1, EERS-2, EERS-3, EERS-4, EERS-5)

SCALE: NOT TO SCALE

AHU-2 POINT LIST

CONTROL MARK	POINT NAME	TYPE	ALARMS		GRAPHIC	TREND
			ALARM LO	ALARM HI		
D1	PRE-FILTER DIFFERENTIAL PRESSURE SENSOR	AI		X	X	X
D2	FINAL FILTER DIFFERENTIAL PRESSURE SENSOR	AI		X	X	X
D3	SUPPLY AIRFLOW PROVING SWITCH	BI	X		X	X
D4	OUTDOOR HEAT PUMP UNIT START/STOP	BO			X	X
D5	SUPPLY FAN START/STOP	BO	X		X	X
D6	SUPPLY FAN SPEED	AO			X	X
D7	SUPPLY FAN STATUS	BI			X	X
D8	OUTSIDE AIR TEMPERATURE	AI			X	X
D9	OUTSIDE AIR RELATIVE HUMIDITY	AI			X	X
D10	LEAVING COIL TEMPERATURE SENSOR	AI			X	X
D11	SUPPLY AIRFLOW RATE	AI			X	X
D12	RETURN AIR RELATIVE HUMIDITY	AI			X	X
D13	DISCHARGE AIR TEMPERATURE	AI			X	X
D14	SUPPLY AIR DUCT STATIC PRESSURE	AI			X	X
D15	EXHAUST FAN EF-9 START/STOP	BO			X	X
D16	EXHAUST FAN EF-9 STATUS	BI			X	X
D17	MOTORIZED DAMPER (EF-9)	BO			X	X
D18	OUTSIDE AIRFLOW RATE	AI			X	X
D20	OUTSIDE AIR DAMPER	AO			X	X
D21	RETURN AIR TEMPERATURE	AI			X	X
D22	UV STATUS (ON/OFF)	BI			X	X
D23	OUTSIDE AIR FILTER DIFFERENTIAL PRESSURE SENSOR	AI		X	X	X
D24	MIXED AIR RELATIVE HUMIDTY	AI			X	X
D25	MIXED AIR TEMPERATURE	AI			X	X
D27	RETURN AIR DAMPER	AO			X	X

SEQUENCE OF OPERATION

OCCUPIED MODE: THE VARIABLE VOLUME AIR-HANDLING UNIT (AHU-2) MUST BE PROVIDED WITH MANUFACTURER'S CONTROLS, MUST PROVIDE INTERFACE WITH DDC, AND MUST OPERATE AT ALL TIMES. THE AHU-2 SUPPLY FAN MUST BE INTERLOCKED WITH THE EF-9 EXHAUST FAN. THE MOTORIZED OUTSIDE AIR DAMPER MUST BE OPEN AND MUST MODULATE TO MAINTAIN OUTSIDE AIR FLOW MINIMUM. THE VARIABLE VOLUME AIR HANDLING UNIT DX COIL AND HEAT PUMP MUST BE SEQUENCED WITHOUT OVERLAP TO MAINTAIN A SUPPLY AIR DISCHARGE AIR TEMPERATURE OF 55°F (ADJ). THE RETURN AIR RELATIVE HUMIDITY, SUPPLY AIRFLOW RATE, OUTSIDE AIR RELATIVE, HUMIDITY, EF-9 STATUS, SUPPLY AIR STATIC PRESSURE, AND RETURN AIR TEMPERATURE MUST BE MONITORED BY THE BAS. ALL DAMPERS MUST BE LOW LEAKAGE.

ELECTRONICALLY COMMUTATED (ECM) MOTOR

THE SUPPLY FAN MUST BE CONTROLLED BY THE MANUFACTURER'S CONTROL PANEL. THE SUPPLY FAN ELECTRONICALLY COMMUTATED (ECM) MOTOR MUST BE CONTROLLED TO MAINTAIN STATIC PRESSURE. THE STATIC PRESSURE SET POINT MUST BE RESET USING THE CRITICAL ZONE METHOD. THE STATIC PRESSURE SET POINT MUST BE INCREMENTALLY ADJUSTED TO ENSURE THE CRITICAL ZONE TERMINAL BOX PRIMARY AIR VALVE IS FULLY OPEN. THE SUPPLY FAN STATUS MUST BE MONITORED BY THE BUILDING AUTOMATION SYSTEM (BAS).

DX COOLING COIL

THE DEHUMIDIFICATION MODE MUST BE ACTIVATED WHEN THE RELATIVE HUMIDITY IN THE SPACE RISES ABOVE 55% AS SENSED BY THE ZONE HUMIDITY SENSORS ON MP101A. THE DX COIL MUST ENTER FULL COOLING CAPACITY TO SUPPLY AIR TO THE VAV BOX DEMANDING DEHUMIDIFICATION. THE UNIT MUST EXIT DEHUMIDIFICATION MODE WHEN THE SPACE HUMIDITY IN THE SPACE FALLS BELOW 45%. THE VARIABLE VOLUME AIR HANDLING UNIT CONTROLLER MUST MODULATE THE HEAT PUMP UNIT AND DX COOLING COIL VALVE TO MAINTAIN SUPPLY AIR DISCHARGE AIR TEMPERATURE AFTER THE AIRFLOW PROVING SWITCH ENSURES PROPER AIRFLOW. THE COOLING MODE MUST BE ENABLED WHENEVER THE SUPPLY AIR TEMPERATURE IS ABOVE 55°F.

ECONOMIZER MODE

IF THE OUTSIDE AIR RELATIVE HUMIDITY IS LESS THAN 60% (ADJ) RH AND THE TEMPERATURE IS BETWEEN 40°F AND 60°F THE AIR HANDLING UNIT MUST OPERATE IN ECONOMIZER MODE AND THE HEAT PUMP MUST BE DE-ENERGIZED.

ALARMS

THE SUPPLY FAN FAILURE TO START MUST SHUT DOWN THE VARIABLE VOLUME AIR-HANDLING UNIT AND AN ALARM MUST BE SENT TO THE BAS. ON A CHANGE IN SUPPLY AIR TEMPERATURE ABOVE 60°F (ADJ) OR BELOW 50°F (ADJ) AN ALARM MUST BE SENT TO THE BUILDING AUTOMATION SYSTEM. THE VARIABLE VOLUME AIR HANDLING UNIT CONTROLLER MUST MONITOR DIFFERENTIAL PRESSURE ACROSS THE RETURN AIR FILTERS. WHEN THE DIFFERENTIAL PRESSURE EXCEEDS 0.25 INCHES WC (ADJ), AN ALARM MUST BE SENT TO THE BAS. IF THE AIRFLOW PROVING SWITCH INDICATES NO SUPPLY FAN AIRFLOW, AN ALARM MUST BE SENT TO THE BAS.

ULTRAVIOLET LIGHT

THE ULTRAVIOLET LIGHT MUST TURN ON WHEN THE SUPPLY FAN IS ON AND TURN OFF WHEN THE SUPPLY FAN IS OFF.

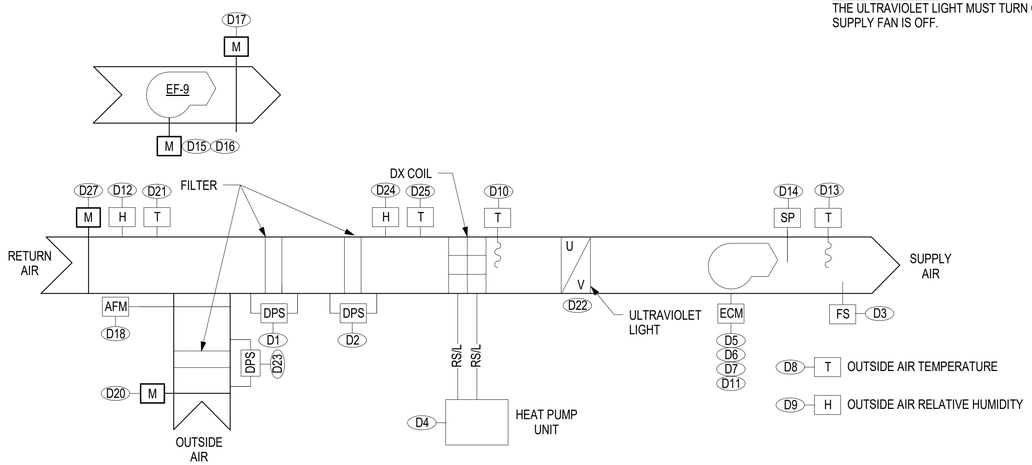

A1 UNIT CONTROLS - VARIABLE VOLUME AIR HANDLING UNIT (AHU-2)

SCALE: NOT TO SCALE

SEQUENCE OF OPERATION

RUN CONDITIONS - ENABLED

THE FAN MUST BE CONTINUOUSLY ENERGIZED TO MECHANICALLY VENTILATE WHEN THE WALL MOUNTED USER SWITCH IS ACTIVATED, THE CARBON MONOXIDE SENSOR SENSES 40 PARTS PER MILLION, OR THE NITROGEN DIOXIDE SENSOR SENSES 5 PARTS PER MILLION. AHU-1, ERV-1, AND EF-8 SHALL TURN OFF WHEN EF-1, EF-2, AND EF-3 ARE TURNED ON.

THE FAN MUST TURN OFF WHEN THE USER SWITCH IS PRESSED AGAIN OR THE CARBON MONOXIDE AND NITROGEN SENSOR BOTH SENSE BELOW THE THRESHOLD. AHU-1, ERV-1, AND EF-8 MUST ENERGIZE.

DAMPERS

THE EXHAUST DAMPER AND OUTSIDE AIR DAMPER MUST OPEN ANYTIME THE CONTROLLER ENERGIZES THE FAN. DAMPERS MUST CLOSE WHEN THE FAN IS COMMANDED 'OFF'. ALL DAMPERS MUST BE LOW LEAKAGE.

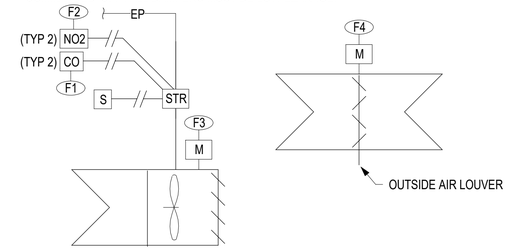

EF-1, EF-2, EF-3 POINTS LIST

CONTROL MARK	POINTS NAME	TYPE	ALARMS		GRAPHICS	TREND
			ALARM LO	ALARM HIGH		
F1	CARBON MONOXIDE SENSOR	AI		X	X	X
F2	NITROGEN DIOXIDE SENSOR	AI		X	X	X
F3	FAN START/STOP	BO			X	X
F4	OUTSIDE AIR DAMPER	AI			X	X

C4 CONTROLS - EXHAUST FAN - VEHICLE BAY (EF-1, EF-2, EF-3)

SCALE: NOT TO SCALE

SEQUENCE OF OPERATION

THE UNIT HEAT MUST OPERATE UNDER MANUFACTURER CONTROLS. WHEN THE SPACE TEMPERATURE IS BELOW SETPOINT (55°F ADJ.) THE UNIT HEATER MUST TURN ON. WHEN THE SPACE TEMPERATURE IS ABOVE SETPOINT THE UNIT MUST TURN OFF. AN ALARM MUST BE SENT TO BAS IF TEMPERATURE FALLS BELOW 45°F.

EUH-5 POINTS LIST

CONTROL MARK	POINTS NAME	TYPE	ALARMS		GRAPHICS	TREND
			ALARM LO	ALARM HIGH		
G1	TEMPERATURE	AI	X		X	X

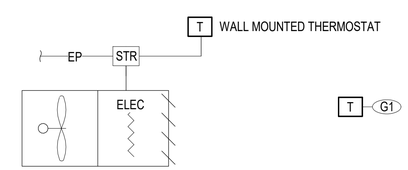

A4 CONTROLS - UNIT HEATER (EUH-5)

SCALE: NOT TO SCALE

SYM	DESCRIPTION	DATE	APPR

SEAL

A/E INFO

APPROVED

FOR COMMANDER NAVFAC

ACTIVITY: Approved by LCDR VINCE DEL GRECO, ROICC with PWD YORKTOWN, via Email,

SATISFACTORY TO DATE 03/26/2026

DES RMD DRW RZL CHK FCF

PM/DM MME/JWW

BRANCH MANAGER ALG

CHIEF ENG/ARCH JWJ

FIRE PROTECTION HPN

DEPARTMENT OF THE NAVY
NAVAL FACILITIES ENGINEERING SYSTEMS COMMAND
MIDLANT PDC CORE

NAVAL FACILITIES ENGINEERING SYSTEMS COMMAND - MID-ATLANTIC
NAVAL STATION - NORFOLK, VA

NAVAL WEAPONS STATION YORKTOWN, VIRGINIA

P171 WEAPON MAGAZINES SEGREGATION FACILITIES

MECHANICAL CONTROLS

SCALE: AS NOTED

EPROJECT NO.: 1737010

CONSTR. CONTR. NO.

NAVFAC DRAWING NO. 12942118

SHEET 442 OF 499

MI802A

DRAWFORM REVISION: 25 AUGUST 2020

4/1/2026 1:49:58 PM MI802A
C:\Users\rachael.duke\Documents\P171-1737010-M-R21-SEG_rachael.duke.rvt

ENERGY RECOVERY UNIT POINT LIST

CONTROL MARK	POINT NAME	TYPE	ALARMS		GRAPHIC	TREND
			ALARM LO	ALARM HI		
F1	OUTSIDE AIRFLOW MEASURING STATION	AI	X		X	X
F2	RETURN AIR FILTER DIFFERENTIAL PRESSURE SENSOR	AI		X	X	
F3	OUTSIDE AIR FILTER DIFFERENTIAL PRESSURE SENSOR	AI		X	X	
F3	OUTSIDE AIR FILTER DIFFERENTIAL PRESSURE SENSOR	AI		X	X	
F4	RETURN FAN START/STOP	BO			X	
F5	RETURN FAN STATUS	BI			X	
F6	RETURN FAN SPEED	AO			X	
F7	SUPPLY AIR STATIC PRESSURE	AI			X	
F8	OUTSIDE AIRFLOW MEASURING STATION	AI	X		X	X
F9	EXHAUST AIR DAMPER	AO			X	
F10	OUTSIDE AIR DAMPER	AO			X	
F11	SUPPLY FAN START/STOP	BO			X	
F12	OUTSIDE AIR HUMIDITY	AI			X	X
F13	SUPPLY AIR DUCT SMOKE DETECTOR	BI		X	X	
F14	AIR FLOW PROVING SWITCH	BI		X	X	
F15	SUPPLY FAN STATUS	BI			X	
F16	SUPPLY FAN SPEED	AO	X		X	
F17	OUTSIDE AIR TEMPERATURE	AI			X	X
F18	SUPPLY AIR TEMPERATURE	AI			X	X
F19	SUPPLY AIR RELATIVE HUMIDITY	AI			X	X
F20	EXHAUST AIR TEMPERATURE	AI			X	X
F21	EXHAUST AIR RELATIVE HUMIDITY	AI			X	X
F22	RETURN AIR TEMPERATURE	AI			X	X
F23	RETURN AIR RELATIVE HUMIDITY	AI			X	X
F24	RETURN AIR FILTER DIFFERENTIAL PRESSURE SENSOR	AI		X	X	
F25	BYPASS DAMPER	AO			X	
F26	BYPASS DAMPER	AO			X	

SEQUENCE OF OPERATION

THE ENERGY RECOVERY UNIT MUST BE PROVIDED WITH MANUFACTURERS CONTROLS, MUST RUN CONTINUOUSLY, AND MUST PROVIDE INTERFACE BETWEEN MANUFACTURER'S CONTROLS TO THE DDC. WHEN ENERGIZED, THE OUTSIDE AIR AND EXHAUST AIR DAMPERS MUST OPEN BEFORE THE FANS START.

THE SUPPLY AND EXHAUST FANS MUST BE CONTROLLED BY THE MANUFACTURER'S CONTROL PANEL. THE SUPPLY AND EXHAUST FANS ELECTRONICALLY COMMUTATED (ECM) MOTORS MUST MODULATE THEIR SPEED TO MAINTAIN THE MINIMUM OUTSIDE AIRFLOW SHOWN ON THE CONTRACT DRAWINGS. THE OUTSIDE AIRFLOW IS MEASURED AT THE OUTSIDE AIRFLOW MEASURING STATION. THE SUPPLY AND EXHAUST FAN STATUS MUST BE MONITORED BY THE BUILDING AUTOMATION SYSTEM (BAS). THESE SWITCHES MUST ALSO BE CONNECTED TO THE BUILDING AUTOMATION SYSTEM. THE SUPPLY AND EXHAUST FAN AIRFLOW RATE MUST BE INDICATED AT THE BAS. THE SUPPLY AIR TEMPERATURE, PRESSURE, AND HUMIDITY MUST BE INDICATED AT THE BAS.

ENERGY RECOVERY CONTROLS
THE BYPASS DAMPER MUST CLOSE WHEN THE ENERGY RECOVERY UNIT IS NOT IN ECONOMIZER MODE. IF THE OUTSIDE AIR RELATIVE ENTHALPY IS BETWEEN 25 AND 28 BTU/ LB OF DRY AIR (ADJ) AND THE OUTSIDE AIR TEMPERATURE IS BETWEEN 70 AND 75 F (ADJ), THE ENERGY RECOVERY AIR UNIT MUST OPERATE IN ECONOMIZER MODE. WHEN IN ECONOMIZER MODE, THE ENERGY RECOVERY UNIT BYPASS DAMPER MUST BE OPEN.

ALARMS
THE ENERGY RECOVERY UNIT CONTROLLER MUST MONITOR DIFFERENTIAL PRESSURE ACROSS THE RETURN AND OUTSIDE AIR FILTERS. WHEN THE DIFFERENTIAL PRESSURE EXCEEDS 0.25 INCHES WC, A DIRTY FILTER ALARM MUST BE SENT TO THE BAS.
IF THE AIRFLOW PROVING SWITCH INDICATES NO SUPPLY FAN AIRFLOW, AN ALARM MUST BE SENT TO THE BAS.
IF THE OUTSIDE AIRFLOW RATE FALLS BELOW 10% OF THE DESIGN MINIMUM SHOWN ON THE CONTRACT DRAWINGS, AN ALARM MUST BE SENT TO THE BAS.

THE ENERGY RECOVERY UNIT MUST SHUT DOWN AND GENERATE AN ALARM UPON RECEIVING A SMOKE DETECTOR STATUS. UPON MANUAL CLEARING OF THE ALARM AT THE FIRE CONTROL PANEL, THE UNIT MUST START AGAIN IN NORMAL POSITION. THE DUCT SMOKE DETECTOR MUST BE POWERED FROM THE FIRE ALARM PANEL AND PROVIDED IN THE RETURN DUCTWORK AS A SEPARATE DEVICE.

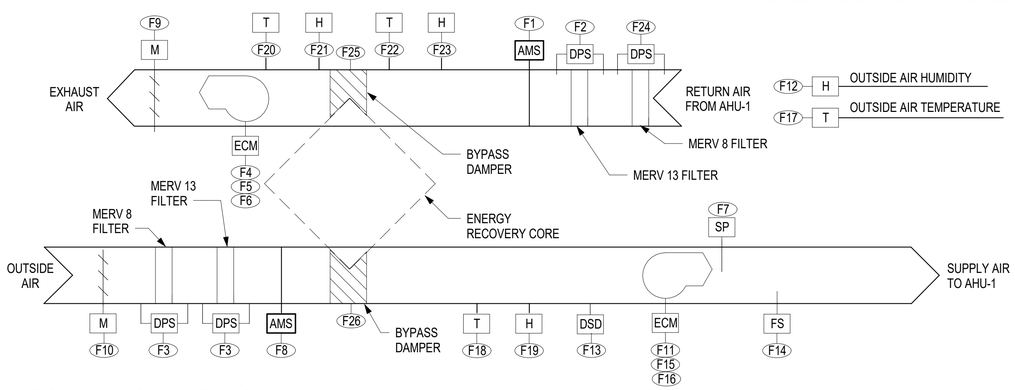

A1 CONTROLS - PACKAGED ERV (ERV-1)

SCALE: NOT TO SCALE

EMERGENCY SHOWER/EYEWASH UNIT POINT LIST

CONTROL MARK	POINT NAME	TYPE	ALARMS		GRAPHIC	TREND
			ALARM LO	ALARM HI		
R1	ALARM STATUS	AO		X	X	X
S1	ALARM STATUS	AO		X	X	X

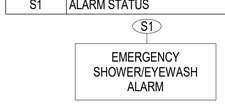

SEQUENCE OF OPERATION

RECORD EVENT IN BAS WHEN EITHER EMERGENCY SHOWER/EYEWASH ALARM IS ACTIVATED.

A4 CONTROLS - EMERGENCY SHOWER/EYEWASH

SCALE: NOT TO SCALE

SYM	DESCRIPTION	DATE	APPR

NAVFAC

SEAL

A/E INFO

APPROVED
SIGNED AT NORFOLK, VA
FOR COMMANDER NAVFAC

ACTIVITY
Approved by LCDR VINCE DEL GRECO, ROICC with PWD YORKTOWN, via Email,

SATISFACTORY TO DATE 03/26/2026

DES RMD | DRW RZL | CHK FCF
PM/DM MME/JWW
BRANCH MANAGER ALG
CHIEF ENG/ARCH JWJ
FIRE PROTECTION HPN

DEPARTMENT OF THE NAVY
NAVAL FACILITIES ENGINEERING COMMAND
MIDLANT PDC CORE
NAVAL FACILITIES ENGINEERING SYSTEMS COMMAND
NAVAL STATION - NORFOLK, VA
NAVAL FACILITIES ENGINEERING SYSTEMS COMMAND - MID-ATLANTIC
NAVAL WEAPONS STATION
YORKTOWN, VIRGINIA
P171 WEAPON MAGAZINES
SEGREGATION FACILITIES
MECHANICAL CONTROLS

SCALE: AS NOTED
EPROJECT NO.: 1737010
CONSTR. CONTR. NO.
NAVFAC DRAWING NO. 12942119
SHEET 443 OF 499
MI803A

DRAWFORM REVISION: 25 AUGUST 2020

4/1/2026 1:49:58 PM
C:\Users\rachael.duke\Documents\P171-1737010-M-R21-SEG_rachael.duke.rvt
MI803A

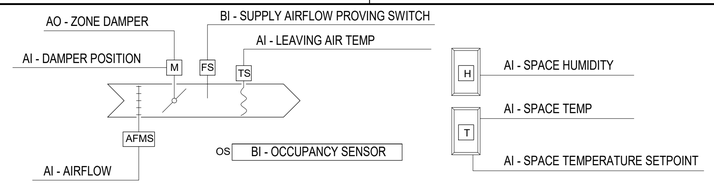

VAV POINT LIST

POINTS NAME	TYPE	ALARMS		GRAPHICS	TREND
		ALARM LO	ALARM HIGH		
SPACE HUMIDITY	AI			X	X
SPACE TEMPERATURE	AI	X	X	X	X
SPACE TEMPERATURE SETPOINT	AI			X	
PRIMARY AIR VOLUME	AI			X	X
PRIMARY AIR DAMPER	AO			X	
SUPPLY DISCHARGE AIR TEMPERATURE	AI			X	X
SUPPLY AIRFLOW PROVING SWITCH	BI			X	
SPACE OCCUPANCY	BI			X	X

SEQUENCE OF OPERATION

RUN CONDITIONS - ENABLED:
THE UNIT SHALL SATISFY THE SPACE SETPOINT BY MODULATING BOTH THE SUPPLY VOLUMETRIC AIRFLOW AND THE ELECTRIC HEATING COIL.

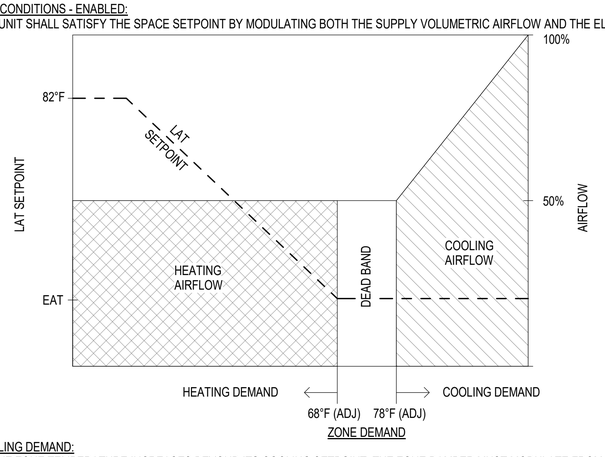

COOLING DEMAND:
AS THE ZONE TEMPERATURE INCREASES BEYOND ITS COOLING SETPOINT, THE ZONE DAMPER MUST MODULATE FROM THE MINIMUM AIRFLOW UP TO THE MAXIMUM COOLING AIRFLOW UNTIL THE SETPOINT IS SATISFIED. AS ZONE TEMPERATURE DECREASES BELOW COOLING SETPOINT, THE OPPOSITE MUST OCCUR AS THE ZONE DAMPER MODULATES CLOSED TO DECREASE AIRFLOW DOWN TO THE MINIMUM RATE ACCORDINGLY.

DEHUMIDIFICATION DEMAND:
AS THE ZONE HUMIDITY INCREASES BEYOND ITS SETPOINT, THE ZONE DAMPER MUST MODULATE FROM THE MINIMUM AIRFLOW UP TO THE MAXIMUM COOLING AIRFLOW UNTIL THE SETPOINT IS SATISFIED. AS ZONE HUMDITY DECREASES BELOW SETPOINT, THE OPPOSITE MUST OCCUR AS THE ZONE DAMPER MODULATES CLOSED TO DECREASE AIRFLOW DOWN TO THE MINIMUM RATE ACCORDINGLY. VAV BOX MUST MODULATE ELECTRIC REHEAT COIL TO MAINTAIN ZONE SETPOINT.

DEADBAND:
WHEN THE ZONE TEMPERATURE IS BETWEEN THE COOLING SETPOINT AND THE HEATING SETPOINT, THE ZONE DAMPER MUST MAINTAIN THE MINIMUM CONSTANT AIRFLOW AND THE ELECTRIC HEAT MUST BE OFF.

HEATING DEMAND:
WHEN ZONE TEMPERATURE IS LESS THAN ITS HEATING SETPOINT, THE CONTROLLER MUST ENABLE THE ELECTRIC HEAT AND MODULATE THE SCR TO MAINTAIN THE ZONE TEMPERATURE AT ITS HEATING SETPOINT. AS ZONE TEMPERATURE RISES ABOVE HEATING SETPOINT, THE ELECTRIC HEAT MUST TURN OFF.

SCHEDULED SETPOINTS:
THE SETPOINTS MUST BE AS SHOWN ON SHEET M-001A.

ZONE OVERRIDE:
A TIMED LOCAL OVERRIDE CONTROL MUST ALLOW AN OCCUPANT TO OVERRIDE THE SCHEDULE (+/- 1°F) AND PLACE THE UNIT INTO AN OCCUPIED MODE FOR AN ADJUSTABLE PERIOD OF TIME. AT THE EXPIRATION OF THIS TIME, CONTROL OF THE UNIT MUST AUTOMATICALLY RETURN TO THE SCHEDULE. EACH ZONE THERMOSTAT MUST INCLUDE AN OCCUPANCY SENSOR TO OVERRIDE THE OCCUPANCY SCHEDULE FOR 1 HOUR MINIMUM.

LEAVING AIR TEMPERATURE (LAT) LIMIT:
THE CONTROLLER MUST MEASURE THE LAT AND LIMIT REHEATING TO NO MORE THAN 82°F (ADJ.) LEAVING AIR TEMPERATURE.

DAMPER DEFAULT
THE ZONE DAMPER MUST BE NORMALLY OPEN (N.O.) SPRING RETURN UPON LOSS OF EITHER SIGNAL OR POWER.

VALVE RATE OF CHANGE
THE CONTROL VALVE ACTUATOR RATE OF CHANGE MUST BE LIMITED TO A MAXIMUM SPEED OF 10% TOTAL STROKE PER MINUTE (ADJ.).

ALARMS SHALL BE PROVIDED AS FOLLOWS:
- HIGH DISCHARGE AIR TEMP: IF THE DISCHARGE AIR TEMPERATURE IS GREATER THAN 100°F.
- LOW ZONE TEMP: IF ZONE TEMPERATURE IS LESS THAN 5°F BELOW SETPOINT FOR MORE THAN 15 MINUTES.
- HIGH ZONE TEMP: IF ZONE TEMPERATURE IS GREATER THAN 5°F ABOVE SETPOINT FOR MORE THAN 15 MINUTES.

A1 CONTROLS - VAV BOX SINGLE STAGE (VAV-1, VAV-2, VAV-3, VAV-4)

SCALE: NOT TO SCALE

AHU-1 POINT LIST

CONTROL MARK	POINT NAME	TYPE	ALARMS		GRAPHIC	TREND
			ALARM LO	ALARM HI		
G1	PRE-FILTER DIFFERENTIAL PRESSURE SENSOR	AI		X	X	
G2	FINAL FILTER DIFFERENTIAL PRESSURE SENSOR	AI		X	X	
G3	SUPPLY FAN START/STOP	BO		X	X	
G4	SUPPLY FAN START STATUS	BI			X	
G5	SPACE TEMPERATURE SETPOINT (ROOM NO. 115 - NORTH)	AI			X	
G6	RETURN AIR DUCT STATIC PRESSURE SWITCH	AI		X	X	X
G7	SUPPLY AIRFLOW RATE	AI			X	
G8	SUPPLY AIR RELATIVE HUMIDITY	AI			X	X
G9	SUPPLY AIR TEMPERATURE	AI			X	X
G10	SUPPLY AIR DUCT STATIC PRESSURE	AI			X	
G11	SUPPLY AIR DUCT STATIC PRESSURE SWITCH	BI			X	
G12	SPACE TEMPERATURE (ROOM NO. 118)	AI	X	X	X	X
G13	SUPPLY AIRFLOW PROVING SWITCH	BI		X	X	
G14	SPACE TEMPERATURE (ROOM NO. 117)	AI	X	X	X	X
G15	SPACE TEMPERATURE SETPOINT (ROOM NO. 117)	AI			X	X
G16	SPACE TEMPERATURE (ROOM NO. 115 - NORTH)	AI	X	X	X	X
G17	EF-8 MOTORIZED DAMPER	BO			X	
G18	EF-8 START/STOP	BO			X	
G19	EF-8 STATUS	BI			X	
G20	SPACE TEMPERATURE SETPOINT (ROOM NO. 118)	AI			X	
G21	SPACE TEMPERATURE (ROOM NO. 119)	AI	X	X	X	X
G22	SPACE TEMPERATURE SETPOINT (ROOM NO. 119)	AI			X	
G23	SPACE TEMPERATURE (ROOM NO. 115 - SOUTH)	AI	X	X	X	X
G24	SPACE TEMPERATURE SETPOINT (ROOM NO. 115 - SOUTH)	AI			X	
G25	DUCT HEATER (DH-1) SUPPLY AIR TEMPERATURE	AI			X	X
G26	DUCT HEATER (DH-2) SUPPLY AIR TEMPERATURE	AI			X	X
G27	DUAL CIRCUITED COIL LEAVING SUPPLY AIR TEMPERATURE	AI			X	X
G28	SPACE RELATIVE HUMIDITY SETPOINT (ROOM NO. 118)	AI			X	X
G29	SPACE RELATIVE HUMIDITY (ROOM NO. 118)	AI	X	X	X	X
G30	SPACE RELATIVE HUMIDITY SETPOINT (ROOM NO. 117)	AI			X	X
G31	SPACE RELATIVE HUMIDITY (ROOM NO. 117)	AI	X	X	X	X

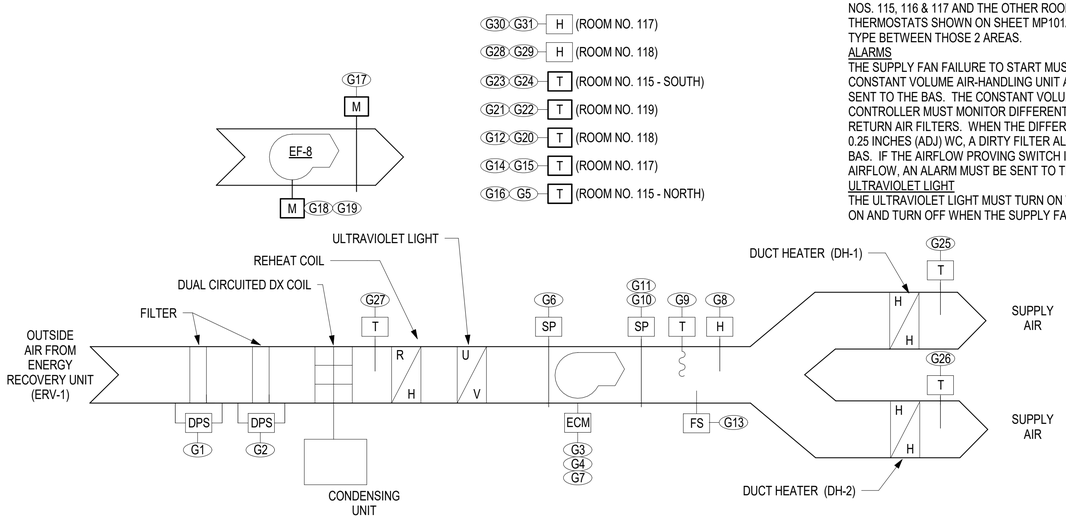

SEQUENCE OF OPERATION

THE CONSTANT VOLUME AIR-HANDLING UNITS (AHU-1) MUST BE PROVIDED WITH MANUFACTURER'S CONTROLS, MUST BE ENABLED AT ALL TIMES, AND MUST PROVIDE INTERFACE TO THE DDC. THE AIR HANDLING UNITS FANS MUST BE INTERLOCKED WITH THE EF-8 EXHAUST FAN. EF-8 MUST NOT BE ENABLED UNTIL AFTER THE MOTORIZED DAMPER PROVES OPEN. THE AHU-1, ERV-1, AND EF-8 MUST TURN OFF WHEN EF-1, EF-2, AND EF-3 EXHAUST FANS ARE ON.

THE CONSTANT VOLUME AIR HANDLING UNIT MUST MAINTAIN A 70F (ADJ) HEATING SET POINT AND A 75F (ADJ) COOLING SET POINT. THE SET POINT MUST BE AVERAGED FROM TWO THERMOSTATS LOCATED AS SHOWN ON THE CONTRACT DRAWINGS.
AFTER RECEIVING A START COMMAND, THE CONSTANT VOLUME AIR-HANDLING UNIT MUST BE ENERGIZED. THE SUPPLY FAN MUST START AFTER THE OUTSIDE AIR DAMPER ASSOCIATED WITH ERV-1 IS PROVEN OPEN. THE SUPPLY FAN MUST BE PROVIDED WITH AN ELECTRONICALLY COMMUTATED MOTOR (ECM) FOR THE PURPOSES OF BALANCING THE UNIT. THE RETURN AIR DAMPER ASSOCIATED WITH THE AIR HANDLER MUST BE OPEN. THE SUPPLY FAN STATUS MUST BE MONITORED BY THE BUILDING AUTOMATION SYSTEM (BAS). THERE MUST BE SUPPLY HIGH AND LOW DUCT STATIC PRESSURE SWITCHES WITH MANUAL RESET BUTTONS TO PROTECT BOTH THE FAN AND DUCTWORK. THESE SWITCHES MUST ALSO BE CONNECTED TO THE BUILDING AUTOMATION SYSTEM. THE DUCT HEATER (DH-1, DH-2) SUPPLY AIR TEMPERATURE MUST BE INDICATED AT THE BAS. THE LEAVING AIR TEMPERATURE AT THE DUAL CIRCUITED COIL MUST BE INDICATED AT THE BAS. THE SUPPLY AIRFLOW RATE, TEMPERATURE AND HUMIDITY MUST BE MONITORED BY THE BAS. THE SUPPLY AIRFLOW RATE MUST BE MEASURED AT THE FAN.
DX COOLING COIL
THERE ARE 5 AVERAGING THERMOSTATS SHOWN ON SHEET MP101A. UPON A CALL FOR COOLING BASED ON THE AVERAGE SPACE TEMPERATURE, THE COOLING MUST BE ENABLED.THE CONSTANT VOLUME AIR HANDLING UNIT CONTROLLER MUST CYCLE THE CONDENSING UNIT AND DX COOLING COIL VALVE TO MAINTAIN INDOOR SPACE TEMPERATURE AFTER THE AIRFLOW PROVING SWITCH ENSURES PROPER AIRFLOW. THE COOLING MODE MUST BE ENABLED WHENEVER THE INDOOR SPACE TEMPERATURE IS ABOVE SETPOINT.
REHEAT COIL
ON A CALL FOR DEHUMIDIFICATION THE HOT GAS REHEAT VALVE IS ENERGIZED AND THE COMPRESSOR IS TURNED ON. UNIT MUST ENTER DEHUMIDIFICATION MODE WHEN THE SPACE HUMIDITY REACHES 55% AND END DEHUMIDIFICATION MODE WHEN THE SPACE HUMIDITY REACHES 45%.
ELECTRIC DUCT HEATER
ON A FALL IN ZONE TEMPERATURE BELOW HEATING SET POINT (ADJ), THE AIR HANDLING UNIT SUPPLY FAN MUST BE ENERGIZED AND THE ELECTRIC DUCT HEATER MUST MODULATE TO MAINTAIN THE INDOOR SPACE TEMPERATURE. ONCE THE SPACE TEMPERATURE IS SATISFIED, THE ELECTRIC DUCT HEATER MUST TURN OFF. THERE MUST BE TWO ELECTRIC DUCT HEATERS. ONE MUST SERVE ROOM NOS. 115, 116 & 117 AND THE OTHER ROOM NOS. 118 & 119. THE THERMOSTATS SHOWN ON SHEET MP101A MUST BE THE AVERAGING TYPE BETWEEN THOSE 2 AREAS.
ALARMS
THE SUPPLY FAN FAILURE TO START MUST SHUT DOWN THE CONSTANT VOLUME AIR-HANDLING UNIT AND AN ALARM MUST BE SENT TO THE BAS. THE CONSTANT VOLUME AIR HANDLING UNIT CONTROLLER MUST MONITOR DIFFERENTIAL PRESSURE ACROSS THE RETURN AIR FILTERS. WHEN THE DIFFERENTIAL PRESSURE EXCEEDS 0.25 INCHES (ADJ) WC, A DIRTY FILTER ALARM MUST BE SENT TO THE BAS. IF THE AIRFLOW PROVING SWITCH INDICATES NO SUPPLY FAN AIRFLOW, AN ALARM MUST BE SENT TO THE BAS.
ULTRAVIOLET LIGHT
THE ULTRAVIOLET LIGHT MUST TURN ON WHEN THE SUPPLY FAN IS ON AND TURN OFF WHEN THE SUPPLY FAN IS OFF.

A3 CONTROLS - CONSTANT VOLUME AIR HANDLING UNIT (AHU-1)

SCALE: NOT TO SCALE

SYM	DESCRIPTION	DATE	APPR

SEAL

A/E INFO
APPROVED
FOR COMMANDER NAVFAC
ACTIVITY
Approved by LCDR VINCE DEL GRECO, ROICC with PWD YORKTOWN, via Email,
SATISFACTORY TO DATE 03/26/2026

DES RMD	DRW RZL	CHK FCF	
PM/DM	MME/JWW		
BRANCH MANAGER	ALG		
CHIEF ENG/ARCH	JWJ		
FIRE PROTECTION	HPN		

DEPARTMENT OF THE NAVY
NAVAL FACILITIES ENGINEERING SYSTEMS COMMAND
MIDLANT PDC CORE
NAVAL FACILITIES ENGINEERING SYSTEMS COMMAND - MID-ATLANTIC
NAVAL STATION - NORFOLK, VA
YORKTOWN, VIRGINIA
NAVAL WEAPONS STATION
P171 WEAPON MAGAZINES
SEGREGATION FACILITIES
MECHANICAL CONTROLS

SCALE: AS NOTED
EPROJECT NO.: 1737010
CONSTR. CONTR. NO.
NAVFAC DRAWING NO.
12942120
SHEET 444 OF 499
MI804A
DRAWFORM REVISION: 25 AUGUST 2020

4/1/2026 1:49:59 PM MI804A
C:\Users\rachael.duke\Documents\P171-1737010-M-R21-SEG_rachael.duke.rvt

ELECTRICAL LEGEND

GENERAL

- DEMOLITION AND NEW WORK NOTE - REFER TO "DEMOLITION NOTES" AND "NEW WORK NOTES" FOR EACH SHEET
- LUMINAIRE CONTROL SCHEDULE MARK - REFER TO "LUMINAIRE CONTROL SCHEDULE" SHEET EL601.
- #. GENERAL NOTE - REFER TO "GENERAL NOTES" FOR EACH SHEET
- OBJECTS ON DRAWINGS AT THIS LINETYPE ARE CATEGORIZED AS NEW OR PROPOSED FOR CONSTRUCTION, UON.
- OBJECTS ON DRAWINGS AT THIS LINETYPE ARE CATEGORIZED AS EXISTING AND MUST BE REMOVED/DEMOLISHED , UON.
- OBJECTS ON DRAWINGS AT THIS LINETYPE ARE CATEGORIZED AS EXISTING, UON.

LIGHTING

- XX LUMINAIRE TYPE. SEE LUMINAIRE SCHEDULE, SHEET EL601A.
- LED LUMINAIRE. (⊣ INDICATES BRACKET, WALL MOUNTED.) LOWER CASE SUBSCRIPTS INDICATED NEXT TO LUMINAIRE INDICATES SWITCH/LUMINAIRE CONTROL RELATIONSHIP.
- LED EMERGENCY LUMINAIRE. (⊣ INDICATES BRACKET, WALL MOUNTED.)
- LED LUMINAIRE. (⊣ INDICATES BRACKET, WALL MOUNTED.)
- LED EXIT LUMINAIRE. ARROW, WHEN USED, INDICATES DIRECTION. (⊣ INDICATES BRACKET, WALL MOUNTED.) FILLED IN QUADRANT(s) OF SYMBOL INDICATES NUMBER AND ORIENTATION OF ILLUMINATED FACES.
- EMERGENCY BATTERY POWERED LED LIGHTING UNIT.
- S# TOGGLE SWITCH, 20A, 120/277V. MOUNT 48" AFF UON. SUBSCRIPT "2" = 2 WAY, "3" = 3 WAY, "4" = 4 WAY. LOWER CASE SUBSCRIPT WHEN USED INDICATES INDICATES ZONE AND SWITCH/LUMINAIRE CONTROL RELATIONSHIP.
- SL# LOW VOLTAGE SWITCH WITH FULL DIMMING CAPABILITIES. "#" = NUMBER OF BUTTONS. LOW VOLTAGE SWITCH MUST HAVE INDIVIDUAL BUTTON(S) TO CONTROL EACH ZONE, UON. LOWER CASE SUBSCRIPT WHEN USED INDICATES INDICATES ZONE AND SWITCH/LUMINAIRE CONTROL RELATIONSHIP. WALL MOUNTED AT 48" AFF, UON.
- Sos OCCUPANCY SENSOR CONTROLLER, DUAL TECHNOLOGY. WALL MOUNTED 48" AFF UON.
- OS OCCUPANCY SENSOR, DUAL TECHNOLOGY. CEILING MOUNTED UON. LOWER CASE SUBSCRIPT WHEN USED INDICATES INDICATES ZONE AND SWITCH/LUMINAIRE CONTROL RELATIONSHIP.

DISTRIBUTION

- 208Y/120V PANELBOARD.
- 480Y/277V PANELBOARD.
- T DRY-TYPE TRANSFORMER. 'T' DENOTES TRANSFORMER IDENTIFICATION

WIRE, CONDUIT, AND RACEWAY

- BRANCH CIRCUIT OR FEEDER WIRING IN CONDUIT. NO TICK MARKS INDICATE 2-#12 CONDUCTORS & 1-#12 GND. IN 1/2" CONDUIT UON. CONDUIT LARGER THAN 1/2" & WIRE LARGER THAN #12 SHALL BE INDICATED.
- L2A-1,3 HOMERUN TO PANEL. PANEL & CIRCUIT DESIGNATIONS AS INDICATED.
- CONDUIT TURNED UP
- CONDUIT TURNED DOWN
- LADDER RACK CABLE TRAY, SIZE AND TYPE AS INDICATED.
- WIRE BASKET CABLE TRAY, SIZE AND TYPE AS INDICATED.

POWER

- 30A, 120V SINGLE OUTLET NEMA 6-30 WITH MATCHING PLUG.
- 20A, 120V DUPLEX CONVENIENCE RECEPTACLE. MOUNT 18" AFF UON. 'GFI' DENOTES INTERNAL GROUND FAULT INTERRUPTER, 'WP' DENOTES WEATHER PROOF ENCLOSURE AND 'C' DENOTES FLUSH MOUNTED IN CEILING, 'HC' DENOTES HALF CONTROLLED RECEPTACLE, SEE DIAGRAM A3/EL601A. 'EP' DENOTES EXPLOSION PROOF RECEPTACLE DESIGNATED FOR CLASS 2, DIV 1.
- 20A, 120V DUPLEX CONVENIENCE RECEPTACLE UTILIZING GROUND FAULT PROTECTION. MOUNT 6" ABOVE COUNTER UON. 'WP' DENOTES WEATHER PROOF ENCLOSURE
- QUADRUPLEX CONVENIENCE RECEPTACLE MOUNTED IN TWO-GANG OUTLET BOX - EACH RATED 20A, 125 VOLTS WITH SINGLE COVER PLATE, MOUNT 18" AFF, UON. 'HC' DENOTES HALF CONTROLLED RECEPTACLE, SEE DIAGRAM A3/EL601A.
- SPECIAL PURPOSE RECEPTACLE.
- J JUNCTION BOX. MINIMUM 4" SQUARE X 2 1/8" SIZE PER NEC.
- GROUND BAR

EQUIPMENT CONNECTIONS

- E EQUIPMENT CONNECTION
- M MOTOR CONNECTION. HP AS INDICATED.
- SM MOTOR RATED SWITCH OR MANUAL MOTOR STARTER WITH OVERLOADS.
- MAGNETIC MOTOR STARTER
- MANUAL MOTOR STARTER
- 3P 30/20 3R DISCONNECT SWITCH. 3P = NO. OF POLES, 30 = SWITCH RATING, 20 = FUSE RATING (NF = INDICATES NON-FUSED), 3R INDICATES NEMA RATING.
- DISCONNECT SWITCH PROVIDED INTEGRAL WITH EQUIPMENT
- VFD VARIABLE FREQUENCY DRIVE

LIGHTNING PROTECTION

- TW DRIVEN GROUND ROD. "TW" WHEN USED INDICATES GROUND ROD TEST AND INSPECTION POCKET.
- AIR TERMINAL
- BOND CONNECTION EXOTHERMICALLY WELD, UON.
- —G—G— GROUND CONDUCTOR - DESCRIPTION AS INDICATED.

ABBREVIATIONS

1/C	ONE CONDUCTOR
A	AMPERAGE OR AMPS
AFF	ABOVE FINISHED FLOOR
AHU	AIR HANDLING UNIT
ARF	ABOVE RAISED FLOOR
BFG	BELOW FINISHED GRADE
BH	BASEBOARD HEATER
BKR	BREAKER
C	CONDUIT
CB	CIRCUIT BREAKER
CKT	CIRCUIT
DAS	DISTRIBUTED ANTENNAE SYSTEM
DWG	DRAWING
EA	EACH
EC	EMPTY CONDUIT
ELEC	ELECTRICAL
EMT	ELECTRICAL METALLIC TUBING
ENCL	ENCLOSURE
EQUIP	EQUIPMENT
EWC	ELECTRIC WATER COOLER
EWH	ELECTRIC WATER HEATER
EXIST	EXISTING
EXP	EXPLOSION PROOF EQUIPMENT
EXT	EXTERIOR
FCU	FAN COIL UNIT
FRP	FIBER REINFORCED POLYMER
FT	FEET
GFCI	GOVERNMENT FURNISHED CONTRACTOR INSTALLED
GFE	GOVERNMENT FURNISHED EQUIPMENT
GFGI	GOVERNMENT FURNISHED GOVERNMENT INSTALLED
GFI	GROUND FAULT INTERRUPTER
GND	GROUND
HGT	HEIGHT
HID	HIGH INTENSITY DISCHARGE
HP	HORSEPOWER
HUB	COMPUTER DISTRIBUTION HUB
LED	LIGHT EMITTING DIODE
LTS	LUMINAIRE
MCB	MAIN CIRCUIT BREAKER
MDP	MAIN DISTRIBUTION PANEL
MECH	MECHANICAL
MLO	MAIN LUGS ONLY
MTD	MOUNTED
MTG HT	MOUNTING HEIGHT
NEC	NATIONAL ELECTRICAL CODE
NF	NON FUSIBLE
NIC	NOT IN CONTRACT
NL	NIGHT LIGHT
NTS	NOT TO SCALE
OBI	OUTLET BASE INFEED
OS	OCCUPANCY SENSOR
PNL	PANEL
PNLBD	PANELBOARD
PVC	POLYVINYL CHLORIDE CONDUIT
QU	QUANTITY
REC	RECEPTACLE
REQ'D	REQUIRED
RGS	RIGID GALVANIZED STEEL
RM	ROOM
SC	SPLIT CIRCUIT (SEE GENERAL NOTE 15)
SE	SERVICE ENTRANCE
SHT	SHEET
SPD	SURGE PROTECTIVE DEVICE
SUB	SUBSTATION
SWBD	SWITCHBOARD
T	TELEPHONE
TYP	TYPICAL
UON	UNLESS OTHERWISE NOTED
V	VOLTAGE OR VOLTS
VRF	VARIABLE REFRIGERANT FLOW UNIT
W	WIRE
WP	WEATHERPROOF
WW	WIREWAY (TROUGH)
X	IN SCHEDULES, ITEM NOT APPLICABLE
XFMR	TRANSFORMER
Ø	PHASE

GENERAL NOTES

A ALL ELECTRICAL WORK AND MATERIAL IS NEW AND MUST BE PROVIDED BY THE CONTRACTOR UON.

B AN EQUIPMENT GROUND WIRE MUST BE RUN WITH FEEDERS AND BRANCH CIRCUITS.

C WIRING MUST BE AS PER NATIONAL ELECTRICAL CODE (NEC).

D ELECTRICAL EQUIPMENT MUST BE IDENTIFIED AND LABELED.

E FEEDERS/CIRCUITS MUST BE IDENTIFIED AT EACH END OF THE WIRE AND AT EVERY SPLICE OR JUNCTION/PULL BOX.

F PROVIDE NAMEPLATES ON THE EXTERIOR OF ELECTRICAL PANELS AND ENCLOSURES AS FOLLOWS:

PANEL XXXXX	DEVICE ID
100A, 208Y/120V-30, 4W	DEVICE RATING
FEEDS FROM PANEL MDP	POWER SOURCE
INSTALLED 2019	INSTALLATION DATE
DRAWING NO. ##,###,###	NAVFAC DRAWING NUMBER

FOR DISCONNECT SWITCHES AND MOTOR STARTERS, THE TOP LINE SHALL BE THE NAME/DESIGNATION OF EQUIPMENT BEING FED BY SAME.

G PROVIDE NEW TYPED DIRECTORIES FOR PANELS (NEW OR EXISTING) INCLUDED IN THIS PROJECT.

H INTERIOR WIRING SYSTEMS MUST BE CONCEALED WITH FLUSH MOUNTED BOXES/DEVICES, UON.

I COORDINATE LOCATION AND POWER REQUIREMENTS OF ELECTRICAL DEVICES WITH MECHANICAL, PLUMBING, ARCHITECTURAL AND FIRE PROTECTION DRAWINGS.

J PROVIDE ARC-FLASH LABELS ON ALL PANELS/DISCONNECT SWITCHES AS PER UFC 3-560-01 AND NFPA 70E. SEE DETAIL PLATE ON SHEET EP701A.

K SINGLE PHASE (120/208V) BRANCH CIRCUITS MUST CONSIST OF 2#12 & 1#12 GND. IN 1/2"C UON. THREE PHASE BRANCH CIRCUITS CONSIST OF 3#12 & 1#12 GND IN 1/2"C UON.

L REFER TO PLANS FOR CONDUCTOR SIZING. COMPLY WITH THE FOLLOWING GUIDELINES FOR CONDUCTOR RUN LENGTHS:

20A,120V CIRCUITS LONGER THAN 100' - USE #10 AWG TO LIMIT VOLTAGE DROP ON BRANCH CIRCUITS TO 3%

20A, 120V CIRCUITS LONGER THAN 150' - USE #8 AWG TO LIMIT VOLTAGE DROP ON BRANCH CIRCUITS TO 3%

20A, 277V CIRCUITS LONGER THAN 150' - USE #10 AWG TO LIMIT VOLTAGE DROP ON BRANCH CIRCUITS TO 3%

M WHERE BRANCH CIRCUIT HOMERUNS ARE LABELED "SPLIT CIRCUIT" (SC), THE BRANCH CIRCUIT NUMBER INDICATED HAS BEEN USED ON MORE THAN ONE HOMERUN INDICATOR. INSTALL ONLY ONE CONDUCTOR PER CIRCUIT BREAKER POLE WITHIN THE PANELBOARD ENCLOSURE. SPLICES NECESSARY TO SPLIT THE CIRCUIT SHALL BE MADE IN A SEPARATE SPLICE BOX OUTSIDE THE PANELBOARD ENCLOSURE.

N COORDINATE ELECTRICAL WORK WITH ARCHITECTURAL, MECHANICAL AND FIRE PROTECTION WORK PRIOR TO FABRICATION AND INSTALLATION TO PREVENT CONFLICTS. NOTIFY CONTRACTING OFFICER WHERE CONFLICTS ARE DISCOVERED PRIOR TO CONSTRUCTION AND BEFORE BEGINNING WORK IN THOSE AREAS. ALL CONFLICTS THAT ARISE DUE TO LACK OF COORDINATION MUST BE RECTIFIED BY THE CONTRACTOR AT NO COST TO THE GOVERNMENT.

O SEE "ES" SERIES SHEETS FOR ELECTRICAL SITE WORK.

P LIGHTING, POWER AND TELECOMMUNICATION DEVICES LOCATED ON EXTERIOR PERIMETER WALLS MUST BE SURFACE MOUNTED. PROVIDE RGS CONDUIT FOR SURFACE MOUNTED DEVICES.

Q PROVIDE BUILDING ENVELOPE PENETRATION ASSEMBLY MATERIALS, COMPONENTS, SEALS, FLASHING, AND SUPPORT IN ACCORDANCE WITH THE AIR BARRIER SPECIFICATION SECTIONS AND DETAILS IN THE CONTRACT DRAWINGS. BUILDING SYSTEM PENETRATING ITEMS MUST BE SUPPORTED TO PREVENT MOVEMENT AND VIBRATION AT THE INTERSECTION OF THE PENETRANT AND AIR BARRIER. CONFIGURE SYSTEMS TO ALLOW MOVEMENT AND VIBRATION ELSEWHERE WITHIN THE SYSTEM

R ANY ADDITIONAL SERVICES (ELECTRICAL/MECH/PLUMB/ETC) NEEDED TO SUPPORT EQUIPMENT CHOSEN BY CONTRACTOR SHALL BE THE CONTRACTOR'S RESPONSIBILITY TO PROVIDE AT NO INCREASAED COST TO THE GOVERNMENT.

S DEVICES AND COMPONENTS LOCATED ON THE EXTERIOR METAL WALL PANELS MUST HAV IN-PANEL FRP SUPPORTING COMPONENTS WITH A STRUCTURAL CONNECTION TO THE REINFORCES CONCRETE STRUCTURE. SEE DETAIL A4/EL501A. ADJUST LENGTHS AND SPACING OF FRP COMPONENTS TO ACCOMMODATE RECESSED BACK BOXES FOR EACH DEVICE OR COMPONENT.

T NO UTILITY PENETRATIONS OF EXTERIOR OR INTERIOR CONTINUOUS PILE CAPS PERMITTED.

U COORDINATE BUILDING SYSTEM PENETRATING COMPONENTS WITH ENVELOPE PENETRATION LOCATION, SIZE, AND SLEEVE TYPE SHOWN OR IMPLIED DUE TO SYSTEM CONFIGURATION IN THE CONTRACT DOCUMENTS PRIOR TO CONSTRUCTION OF THE BUILDING ENVELOPE. PROVIDE STAINLESS STEEL SCHEDULE 40 PIPE SLEEVES FOR CIRCULAR PENETRANTS IN REINFORCED CONCRETE ASSEMBLIES LESS THAN 1'-4" IN DIAMETER. CUTTING OF REINFORCEMENT WITHIN AN INPLACE WALL OR ROOF STRUCTURAL ASSEMBLY IS NOT PERMITTED. CORE DRILLING OF REINFORCED CONCRETE WALLS AND ROOF IS NOT PERMITTED. PROVIDE XRAY OR STRUCTURE PENETRATING RADAR PRIOR TO LOCATE ITEMS, E.G. REINFORCEMENT, WITHIN THE CAST-IN-PLACE CONCRETE. MARK THE PERIMETER OF LOCATED ITEMS WITH DURABLE, COMPLETELY REMOVABLE PRIMARY COLOR, RED, BLUE, AND GREEN, LINES. OPENINGS CREATED AFTER CONCRETE IS IN PLACE MUST MAINTAIN A MINIMUM OF 2" FROM ANY CAST-IN-PLACE ITEM.

SYM	DESCRIPTION	DATE	APPR

NAVFAC

SEAL

A/E INFO

APPROVED

FOR COMMANDER NAVFAC

ACTIVITY
Approved by LCDR VINCE DEL GRECO, ROICC with PWD YORKTOWN, via Email.

SATISFACTORY TO DATE 03/26/2026

DES CPO DRW CPO CHK JDJ

PM/DM MME/WJW

BRANCH MANAGER WRB

CHIEF ENG/ARCH JWJ

FIRE PROTECTION HPN

DEPARTMENT OF THE NAVY
NAVAL FACILITIES ENGINEERING SYSTEMS COMMAND
MIDLANT DC CORE

NAVAL FACILITIES ENGINEERING SYSTEMS COMMAND - MID-ATLANTIC
NAVAL STATION - NORFOLK, VA

NAVAL WEAPONS STATION YORKTOWN, VIRGINIA

P171 WEAPON MAGAZINES
SEGREGATION FACILITIES

ELECTRICAL SYMBOLS, LEGEND, ABBREVIATIONS, AND NOTES

SCALE: AS NOTED

EPROJECT NO.: 1737010

CONSTR. CONTR. NO.

NAVFAC DRAWING NO.
12942123

SHEET 445 OF 499

E-001A

DRAWFORM REVISION: 25 AUGUST 2020

4/1/2026 2:24:33 PM E-001A
C:\Revit Local Files\P171-1737010-E-R21-SEG_clayton.obrien.rvt

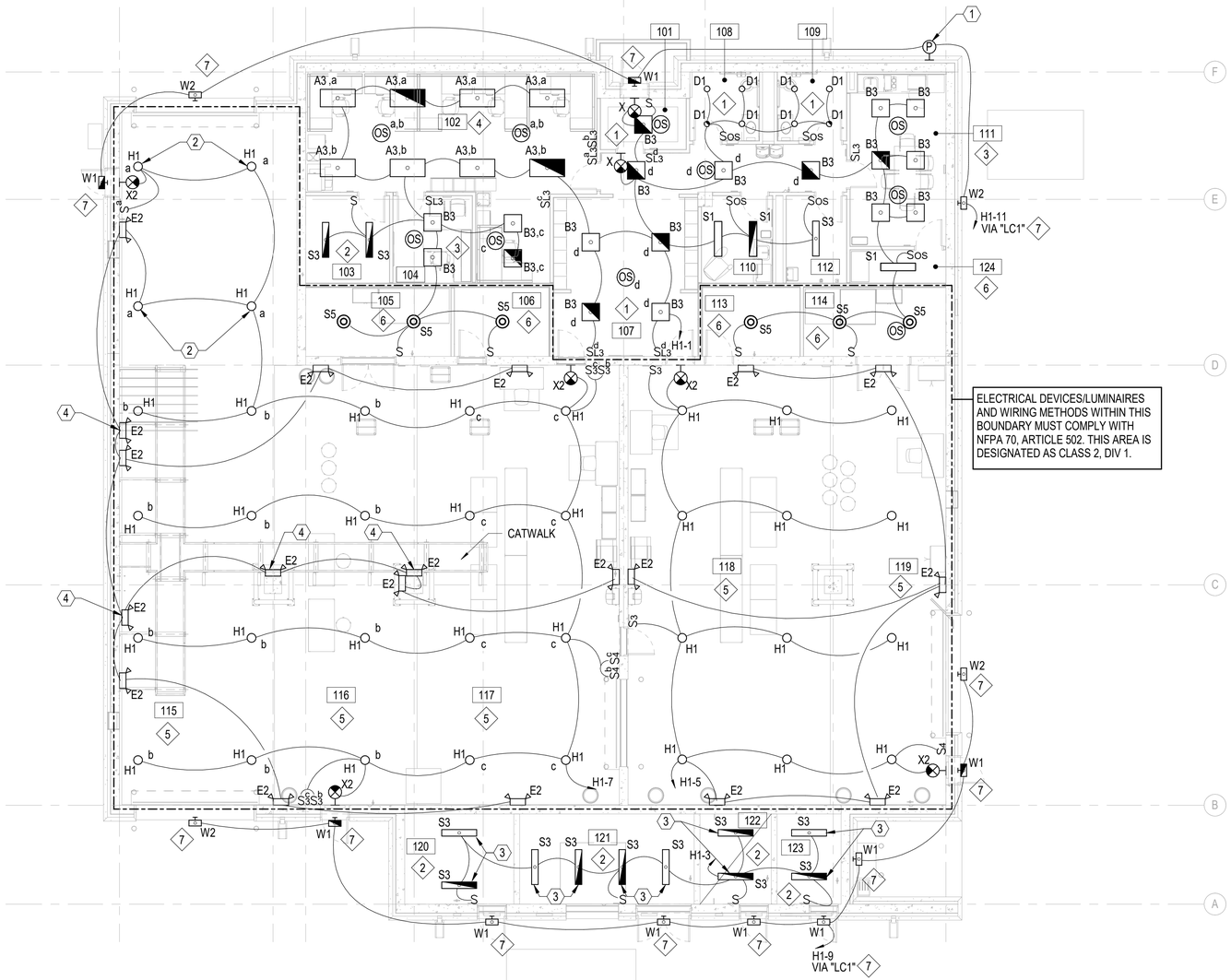

FLOOR PLAN - LIGHTING

1/8" = 1'-0"

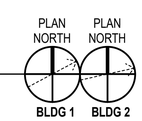

ELECTRICAL SHEET NOTES

A. SEE SHEET EL601A FOR LUMINAIRE SCHEDULE AND LUMINAIRE CONTROL SCHEDULE.

B. ROOM(S) 105,106,113,114,115,116,117,118 AND 119 ARE DESIGNATED AS HAZARDOUS LOCATION, CLASS 2, DIV 1 AND MUST COMPLY WITH NFPA 70, ARTICLE 502.

C. PROVIDE TESTED FIRE RESISTANCE RATED PENETRATION ASSEMBLIES. REFERENCE SHEET GI101A FOR FIRE RESISTANCE RATED SEPARATION LOCATIONS AND RATINGS.

ELECTRICAL KEYNOTES

1 PHOTOCELL, 277V, 1Ø. PROVIDE COMPLETE MOUNTING SUPPORT. SEE LUMINAIRE SCHEDULE ON SHEET EL601A FOR LIGHTING CONTACTOR DESCRIPTION.

2 MOUNT LUMINAIRE 16'-0" AFF.

3 MOUNT LUMINAIRE 10'-0" AFF.

4 MOUNT LUMINAIRE 20'-0" AFF.

ROOM SCHEDULE

ROOM NUMBER	ROOM NAME
101	VESTIBULE
102	OPEN OFFICE
103	SERVER
104	SHOP LEAD
105	GENERAL STORAGE
106	SECURE TOOL ROOM A
107	CORRIDOR
108	TOILET
109	TOILET
110	MOTHERS ROOM
111	PLANNING ROOM
112	CUSTODIAN
113	SECURE TOOL ROOM B
114	GENERAL STORAGE
115	CONTAINER TRANSFER BAY A
116	SEGREGATION CELL A
117	OPEN SEGREGATION AREA A
118	OPEN SEGREGATION AREA B
119	SEGREGATION CELL B
120	SPRINKLER ROOM
121	MECHANICAL ROOM
122	ELECTRICAL ROOM
123	AIR
124	STOR.

GRAPHIC SCALE(S)

1/8" = 1' - 0" 0 5' 10' 15' 30'

SYM	DESCRIPTION	DATE	APPR

NAVFAC

SEAL

A/E INFO

APPROVED

FOR COMMANDER NAVFAC

ACTIVITY: Approved by LCDR VINCE DEL GRECO, ROICC with PWD YORKTOWN, via Email.

SATISFACTORY TO DATE 03/26/2026

DES CPO DRW CPO CHK JDU

PM/DM MME/WJW

BRANCH MANAGER WRB

CHIEF ENG/ARCH JWJ

FIRE PROTECTION HPN

DEPARTMENT OF THE NAVY
NAVAL FACILITIES ENGINEERING SYSTEMS COMMAND
MIDLANT DC CORE

NAVAL FACILITIES ENGINEERING SYSTEMS COMMAND - MID-ATLANTIC
NAVAL STATION - NORFOLK, VA

NAVAL WEAPONS STATION YORKTOWN, VIRGINIA
P171 WEAPON MAGAZINES
SEGREGATION FACILITIES

FLOOR PLAN - LIGHTING

SCALE: AS NOTED

EPROJECT NO.: 1737010

CONSTR. CONTR. NO.

NAVFAC DRAWING NO. 12942124

SHEET 446 OF 499

EL101A

DRAWFORM REVISION: 25 AUGUST 2020

4/1/2026 2:24:43 PM EL101A
C:\Revit Local Files\P171-1737010-E-R21-SEG_clayton.obrien.rvt

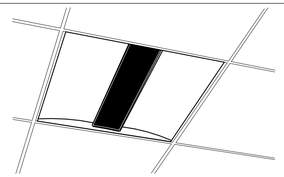

NOTE: THIS SKETCH IS A NON-PROPRIETARY GRAPHIC REPRESENTATION OF A LUMINAIRE THAT MAY MEET THE SPECIFICATION REQUIREMENTS. IT IS NOT INTENDED TO INDICATE A CERTAIN MANUFACTURER OR PREFERENCE.

LUMINAIRE REQUIREMENTS:

1. HOUSING - HEAVY GAUGE COLD ROLLED STEEL OR DIE CAST ALUMINUM. SIZE SHOWN AS INDICATED IN LUMINAIRE SCHEDULE.
2. OPTICS - FROSTED ACRYLIC OR POLYCARBONATE LENS WITH DIE FORMED COLD ROLLED SHEET STEEL REFLECTORS.
3. LIGHT SOURCE - SOLID STATE LEDS, 3500K CCT UON, MINIMUM 80 CRI UON, AND MINIMUM EFFICACY OF 100 LUMENS/WATT UON. INITIAL LUMEN OUTPUT AS INDICATED IN LUMINAIRE SCHEDULE.
4. DRIVER - REPLACEABLE, INTEGRAL, HIGH-EFFICIENCY DIMMABLE DRIVER WITH MINIMUM 0.9 PF, OPERATING VOLTAGE OF 120-277V, THERMAL MANAGEMENT, AND < 20% THD. ON/OFF CONTROL AND FULLY DIMMABLE DOWN TO 10% MINIMUM OR AS INDICATED IN LUMINAIRE SCHEDULE.
5. CERTIFICATION - UL LISTED FOR DRY OR DAMP LOCATION, ROHS COMPLIANT. DLC QUALIFIED. COMPLIES WITH IES LM79, LM80 AND TM21 TESTING STANDARDS.
6. MOUNTING - RECESSED IN HARD OR ACOUSTICAL TILE CEILING.
7. OPTIONS - EMERGENCY BATTERY BACK-UP, INTEGRAL OCCUPANCY/VACANCY SENSOR, VARIOUS SIZE AND OUTPUT OPTIONS, SURFACE-MOUNTING KIT.

DIRECT/INDIRECT LED LUMINAIRE

REVISED:	NOVEMBER 2020	LIGHTING PLATE:	NL-1

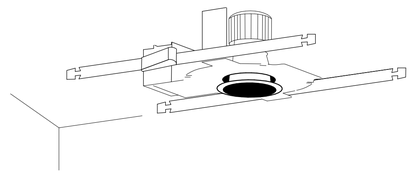

NOTE: THIS SKETCH IS A NON-PROPRIETARY GRAPHIC REPRESENTATION OF A LUMINAIRE THAT MAY MEET THE SPECIFICATION REQUIREMENTS. IT IS NOT INTENDED TO INDICATE A CERTAIN MANUFACTURER OR PREFERENCE.

LUMINAIRE REQUIREMENTS:

1. HOUSING - COLD-ROLLED STEEL OR DIE CAST ALUMINUM, WITH HEAT SINK. APERTURE SIZE AND SHAPE AS INDICATED IN LUMINAIRE SCHEDULE.
2. LIGHT SOURCE - SOLID STATE LEDS, 3500K CCT UON, MINIMUM 80 CRI UON, AND MINIMUM EFFICACY OF 70 LUMENS/WATT UON. INITIAL LUMEN OUTPUT AS INDICATED IN LUMINAIRE SCHEDULE.
3. DRIVER - REPLACEABLE, INTEGRAL, HIGH-EFFICIENCY DIMMABLE DRIVER WITH MINIMUM 0.9 PF, OPERATING VOLTAGE OF 120-277V, THERMAL MANAGEMENT, AND < 20% THD. ON/OFF CONTROL AND FULLY DIMMABLE DOWN TO 10% MINIMUM OR AS INDICATED IN LUMINAIRE SCHEDULE.
4. CERTIFICATION - UL LISTED FOR DRY OR DAMP LOCATION, ROHS COMPLIANT. COMPLIES WITH IES LM79, LM80 AND TM21 TESTING STANDARDS.
5. MOUNTING - RECESSED IN HARD OR ACOUSTICAL TILE CEILING. PROVIDE T-BAR HANGERS FOR INSTALLATION IN ACOUSTICAL TILE CEILINGS OR TABS WHEN MOUNTING IN HARD CEILINGS.
6. OPTIONS - EMERGENCY BATTERY BACK-UP, VARIOUS ACRYLIC OR POLYCARBONATE LENSES, REFLECTORS, LOUVERS AND TRIMS. VARIOUS BEAM ANGLES. IC RATED HOUSING.

FIXED RECESSED DOWNLIGHT

REVISED:	NOVEMBER 2020	LIGHTING PLATE:	NL-12

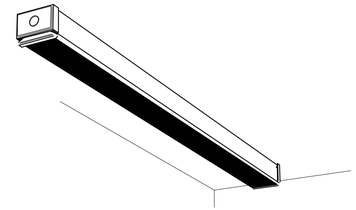

NOTE: THIS SKETCH IS A NON-PROPRIETARY GRAPHIC REPRESENTATION OF A LUMINAIRE THAT MAY MEET THE SPECIFICATION REQUIREMENTS. IT IS NOT INTENDED TO INDICATE A CERTAIN MANUFACTURER OR PREFERENCE.

LUMINAIRE REQUIREMENTS:

1. HOUSING - EXTRUDED ALUMINUM OR WELDED STEEL HOUSING WITH SNAP-ON END CAPS. SIZE AS INDICATED IN LUMINAIRE SCHEDULE.
2. OPTICS - DIFFUSE ACRYLIC LENS.
3. LIGHT SOURCE - SOLID STATE LEDS, 3500K CCT UON, MINIMUM 80 CRI UON, AND MINIMUM EFFICACY OF 90 LUMENS/WATT UON. INITIAL LUMEN OUTPUT AS INDICATED IN LUMINAIRE SCHEDULE.
4. DRIVER - REPLACEABLE, INTEGRAL, HIGH-EFFICIENCY DIMMABLE DRIVER WITH MINIMUM 0.9 PF, OPERATING VOLTAGE OF 120-277V, THERMAL MANAGEMENT, AND < 20% THD. ON/OFF CONTROL AND FULLY DIMMABLE DOWN TO 10% MINIMUM OR AS INDICATED IN LUMINAIRE SCHEDULE.
5. CERTIFICATION - UL LISTED FOR DAMP OR WET LOCATION, ROHS COMPLIANT. DLC QUALIFIED. COMPLIES WITH IES LM79, LM80 AND TM21 TESTING STANDARDS.
6. MOUNTING - PENDANT, STEM, OR SURFACE MOUNTED WITH STAINLESS STEEL MOUNTING HARDWARE.
7. OPTIONS - INTEGRAL OCCUPANCY SENSOR, EMERGENCY BATTERY BACK-UP, VARIOUS PROFILE DIMENSIONS AND RUN LENGTHS, AND VARIOUS CLEAR OR FROSTED POLYCARBONATE LENSES.

LED INDUSTRIAL LIGHT

REVISED:	NOVEMBER 2020	LIGHTING PLATE:	NL-23

NOTE: THIS SKETCH IS A NON-PROPRIETARY GRAPHIC REPRESENTATION OF A LUMINAIRE THAT MAY MEET THE SPECIFICATION REQUIREMENTS. IT IS NOT INTENDED TO INDICATE A CERTAIN MANUFACTURER OR PREFERENCE.

LUMINAIRE REQUIREMENTS:

1. HOUSING - DIE-CAST ALUMINUM OR HIGH-IMPACT, UV-STABILIZED, INJECTION-MOLDED THERMOPLASTIC.
2. LIGHT SOURCE - SOLID STATE LEDS.
3. DRIVER - INTEGRAL, HIGH-EFFICIENCY DRIVER WITH MINIMUM 0.9 PF, OPERATING VOLTAGE OF 120/277V, THERMAL MANAGEMENT, AND < 20% THD.
4. CERTIFICATION - NFPA 101, UL LISTED FOR DAMP OR WET LOCATION, AND ROHS COMPLIANT.
5. MOUNTING - SURFACE MOUNTED ON CEILING AND/OR WALL.
6. OPTIONS - RED OR GREEN LETTERING, ONE- OR TWO-SIDED. ELU REMOTE HEAD CAPABILITIES. BATTERY BACKUP.

EXIT SIGN

REVISED:	NOVEMBER 2020	LIGHTING PLATE:	NL-28

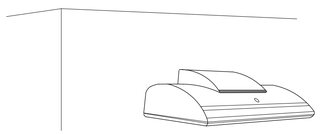

NOTE: THIS SKETCH IS A NON-PROPRIETARY GRAPHIC REPRESENTATION OF A LUMINAIRE THAT MAY MEET THE SPECIFICATION REQUIREMENTS. IT IS NOT INTENDED TO INDICATE A CERTAIN MANUFACTURER OR PREFERENCE.

LUMINAIRE REQUIREMENTS:

1. HOUSING - DIE-CAST OR EXTRUDED ALUMINUM WITH INTEGRAL PASSIVE COOLING MECHANISM. HEAT SINK INCORPORATED DIRECTLY INTO HOUSING OR DRIVER COMPARTMENT.
2. OPTICS - PRECISION MOLDED ACRYLIC LENS WITH TYPE II, III, OR IV DISTRIBUTIONS. BUG UPLIGHT RATING OF U0, WITH GLARE RATING AS DETERMINED BY LIGHTING ZONE INSTALLED.
3. LIGHT SOURCE - SOLID STATE LEDS, 3000K CCT UON, MINIMUM 70 CRI UON, AND MINIMUM EFFICACY OF 80 LUMENS/WATT UON. INITIAL LUMEN OUTPUT AS INDICATED IN LUMINAIRE SCHEDULE.
4. DRIVER - REPLACEABLE, INTEGRAL, HIGH-EFFICIENCY DIMMABLE DRIVER WITH MINIMUM0.9 PF, OPERATING VOLTAGE OF 120-277V, THERMAL MANAGEMENT, AND < 20% THD. ON-OFF CONTROL AND FULLY DIMMABLE DOWN TO 10% MINIMUM OR AS INDICATED IN LUMINAIRE SCHEDULE.
5. CERTIFICATION - UL LISTED FOR WET LOCATION, ROHS COMPLIANT. COMPLIES WITH IES LM79, LM80 AND TM21 TESTING STANDARDS.
6. MOUNTING - SURFACE MOUNTED WITH STAINLESS STEEL MOUNTING HARDWARE.
7. OPTIONS - VARIOUS LIGHT DISTRIBUTIONS. INTEGRAL MOTION SENSOR, PHOTOCELL, BATTERY BACK-UP.

LED WALL PACK

REVISED:	NOVEMBER 2020	LUMINAIRE PLATE:	XL-10

ELECTRICAL SHEET NOTES

A. SEE LUMINAIRE SCHEDULE ON SHEET EL601A FOR ADDITIONAL INFORMATION.

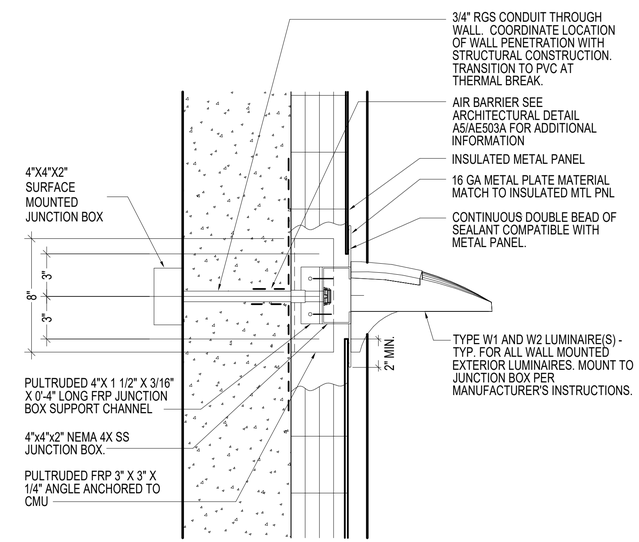

A4 EXTERIOR LUMINAIRE MOUNTING DETAIL - TYPICAL

NOT TO SCALE

SYM	DESCRIPTION	DATE	APPR

NAVFAC

SEAL

A/E INFO

APPROVED

FOR COMMANDER NAVFAC

ACTIVITY: Approved by LCDR VINCE DEL GRECO, RO/CC with PWD YORKTOWN, via Email.

SATISFACTORY TO DATE 03/26/2026

DES CPO | DRW CPO | CHK JDJ

PM/DM MME/WJW

BRANCH MANAGER WRB

CHIEF ENG/ARCH JWJ

FIRE PROTECTION HPN

DEPARTMENT OF THE NAVY
NAVAL FACILITIES ENGINEERING SYSTEMS COMMAND
MIDLANT DC CORE

NAVAL FACILITIES ENGINEERING SYSTEMS COMMAND - MID-ATLANTIC
NAVAL STATION - NORFOLK, VA

NAVAL WEAPONS STATION YORKTOWN, VIRGINIA

P171 WEAPON MAGAZINES SEGREGATION FACILITIES

LUMINAIRE PLATES

SCALE: AS NOTED

EPROJECT NO.: 1737010

CONSTR. CONTR. NO.

NAVFAC DRAWING NO. 12942125

SHEET 447 OF 499

EL501A

DRAWFORM REVISION: 25 AUGUST 2020

4/1/2026 2:24:43 PM EL501A
C:\Revit Local Files\P171-1737010-E-R21-SEG_clayton.obrien.rvt

NOTE: THIS SKETCH IS A NON-PROPRIETARY GRAPHIC REPRESENTATION OF A LUMINAIRE THAT MAY MEET THE SPECIFICATION REQUIREMENTS. IT IS NOT INTENDED TO INDICATE A CERTAIN MANUFACTURER OR PREFERENCE.

LUMINAIRE REQUIREMENTS:

1. HOUSING - DIE-CAST COPPER-FREE ALUMINUM, BAKED POWDER EXPOXY
2. OPTICS - POLYCARBONATE DIFFUSE LENS.
3. LIGHT SOURCE - SOLID STATE LEDS, 3500K CCT UON, MINIMUM 80 CRI UON, AND MINIMUM EFFICACY OF 140 LUMENS/WATT UON. INITIAL LUMEN OUTPUT AS INDICATED IN LUMINAIRE SCHEDULE.
4. DRIVER - REPLACEABLE, INTEGRAL, HIGH-EFFICIENCY DIMMABLE DRIVER WITH MINIMUM 0.9 PF, OPERATING VOLTAGE OF 120-277V, THERMAL MANAGEMENT, AND < 20% THD. ON/OFF CONTROL AND FULLY DIMMABLE DOWN TO 10% MINIMUM OR AS INDICATED IN LUMINAIRE SCHEDULE.
5. CERTIFICATION - UL LISTED FOR DAMP OR WET LOCATION, ROHS COMPLIANT, DLC QUALIFIED, MEETS UL844 REQUIREMENTS FOR CLASS 2, DIV 1 HAZARDOUS LOCATIONS.
6. MOUNTING - PENDANT, STEM, OR SURFACE MOUNTED WITH STAINLESS STEEL MOUNTING HARDWARE.

HAZARDOUS LOCATION HIGH-BAY

LIGHTING PLATE: LP-1

NOTE: THIS SKETCH IS A NON-PROPRIETARY GRAPHIC REPRESENTATION OF A LUMINAIRE THAT MAY MEET THE SPECIFICATION REQUIREMENTS. IT IS NOT INTENDED TO INDICATE A CERTAIN MANUFACTURER OR PREFERENCE.

LUMINAIRE REQUIREMENTS:

1. HOUSING - EXTRUDED ALUMINUM
2. OPTICS - BOROSILICATE GLASS.
3. LIGHT SOURCE - SOLID STATE LEDS, 3500K CCT UON, MINIMUM 80 CRI UON, AND MINIMUM EFFICACY OF 90 LUMENS/WATT UON. INITIAL LUMEN OUTPUT AS INDICATED IN LUMINAIRE SCHEDULE.
4. DRIVER - REPLACEABLE, INTEGRAL, HIGH-EFFICIENCY DIMMABLE DRIVER WITH MINIMUM 0.9 PF, OPERATING VOLTAGE OF 120-277V, THERMAL MANAGEMENT, AND < 20% THD. ON/OFF CONTROL AND FULLY DIMMABLE DOWN TO 10% MINIMUM OR AS INDICATED IN LUMINAIRE SCHEDULE.
5. CERTIFICATION - UL LISTED FOR DAMP OR WET LOCATION, ROHS COMPLIANT, DLC QUALIFIED, MEETS UL844 REQUIREMENTS FOR CLASS 2, DIV 1 HAZARDOUS LOCATIONS.
6. MOUNTING - PENDANT, STEM, OR SURFACE MOUNTED WITH STAINLESS STEEL MOUNTING HARDWARE.

LED HAZARDOUS LOCATION

LIGHTING PLATE: LP-2

NOTE: THIS SKETCH IS A NON-PROPRIETARY GRAPHIC REPRESENTATION OF A LUMINAIRE THAT MAY MEET THE SPECIFICATION REQUIREMENTS. IT IS NOT INTENDED TO INDICATE A CERTAIN MANUFACTURER OR PREFERENCE.

LUMINAIRE REQUIREMENTS:

1. HOUSING - A360 ALUMINUM, BAKED-ON GREY EPOXY FINISH
2. LIGHT SOURCE - SOLID STATE LEDS.
3. DRIVER - INTEGRAL, HIGH-EFFICIENCY DRIVER WITH MINIMUM 0.9 PF, OPERATING VOLTAGE OF 120-277V, THERMAL MANAGEMENT, AND < 20% THD. ON/OFF CONTROL AND BATTERY BACKUP INTEGRAL TO UNIT.
4. CERTIFICATION - NFPA 101. UL LISTED FOR DAMP OR WET LOCATION, ROHS COMPLIANT. COMPLIES WITH IES LM79, LM80 AND TM21 TESTING STANDARDS. MEETS UL844 REQUIREMENTS FOR CLASS 2, DIV 1 HAZARDOUS LOCATIONS.
5. MOUNTING - WALL SURFACE MOUNTED.

HAZARDOUS LED EMERGENCY LIGHTING UNIT (ELU)

LIGHTING PLATE: LP-3

NOTE: THIS SKETCH IS A NON-PROPRIETARY GRAPHIC REPRESENTATION OF A LUMINAIRE THAT MAY MEET THE SPECIFICATION REQUIREMENTS. IT IS NOT INTENDED TO INDICATE A CERTAIN MANUFACTURER OR PREFERENCE.

LUMINAIRE REQUIREMENTS:

1. HOUSING - DIE-CAST ALUMINUM OR HIGH-IMPACT, UV-STABILIZED, INJECTION-MOLDED THERMOPLASTIC.
2. LIGHT SOURCE - SOLID STATE LEDS.
3. DRIVER - INTEGRAL, HIGH-EFFICIENCY DRIVER WITH MINIMUM 0.9 PF, OPERATING VOLTAGE OF 120/277V, THERMAL MANAGEMENT, AND < 20% THD.
4. CERTIFICATION - NFPA 101, UL LISTED FOR DAMP OR WET LOCATION, AND ROHS COMPLIANT. MEETS UL844 REQUIREMENTS FOR CLASS 2, DIV 1 HAZARDOUS LOCATIONS.
5. MOUNTING - SURFACE MOUNTED ON CEILING AND/OR WALL.
6. OPTIONS - RED OR GREEN LETTERING, ONE- OR TWO-SIDED. ELU REMOTE HEAD CAPABILITIES. BATTERY BACKUP.

HAZARDOUS EXIT SIGN

LIGHTING PLATE: LP-4

ELECTRICAL SHEET NOTES

A. SEE LUMINAIRE SCHEDULE ON SHEET EL601A FOR ADDITIONAL INFORMATION.

SYM	DESCRIPTION	DATE	APPR

SEAL

A/E INFO

APPROVED

FOR COMMANDER NAVFAC

ACTIVITY: Approved by LCDR VINCE DEL GRECO, ROICC with PWD YORKTOWN, via Email.

SATISFACTORY TO DATE 03/26/2026

DES CPO | DRW CPO | CHK JDJ

PM/DM MME/WJW

BRANCH MANAGER WRB

CHIEF ENG/ARCH JWJ

FIRE PROTECTION HPN

DEPARTMENT OF THE NAVY
NAVAL FACILITIES ENGINEERING SYSTEMS COMMAND
MIDLANT DC CORE

NAVAL FACILITIES ENGINEERING SYSTEMS COMMAND - MID-ATLANTIC
NAVAL STATION - NORFOLK, VA

NAVAL WEAPONS STATION YORKTOWN, VIRGINIA

P-171 WEAPON MAGAZINES

LUMINAIRE PLATES

SCALE: AS NOTED

EPROJECT NO.: 1737010

CONSTR. CONTR. NO.

NAVFAC DRAWING NO. 12942126

SHEET 448 OF 499

EL502A

DRAWFORM REVISION: 25 AUGUST 2020

4/1/2026 2:24:44 PM EL502A
C:\Revit Local Files\P171-1737010-E-R21-SEG_clayton.obrien.rvt

LUMINAIRE CONTROL SCHEDULE

MARK ◇#	DESCRIPTION OF OPERATION
1	TYPICAL CORRIDOR/VESTIBULE/RESTROOM: MANUAL ON/OFF WITH AUTO-ON CAPABILITIES WITH LUMINAIRE(S) FULL LUMEN OUTPUT WHEN OCCUPANT ACTIVITY IS SENSED. AUTO-OFF WITHIN 15 MINUTES AFTER NO ACTIVITY IS SENSED. SWITCH(ES) AND OCCUPANCY SENSOR(S) ARE LINE VOLTAGE TYPE.
2	TYPICAL MECHANICAL/ELECTRICAL/TELECOMMUNICATIONS ROOM/SPRINKLER ROOM: MANUAL ON / MANUAL OFF TO LUMINAIRE(S) FULL LUMEN OUTPUT.
3	TYPICAL SHOP LEAD/PLANNING ROOM: MANUAL ON. MANUAL WALL CONTROL DEVICE (SWITCH) WITH ON, OFF AND FULL DIMMING CAPABILITIES. AUTO-OFF WITHIN 15 MINUTES OF NO OCCUPANT ACTIVITY. SEE LUMINAIRE CONTROL SCHEDULE NOTE 1.
4	TYPICAL OPEN OFFICE: MANUAL ON/OFF WITH AUTO-ON CAPABILITIES WITH 50% LUMINAIRE(S) LUMEN OUTPUT WHEN OCCUPANT ACTIVITY IS SENSED. MANUAL WALL CONTROL DEVICE (SWITCH) WITH ON, OFF AND FULL DIMMING CAPABILITIES. AUTO-OFF WITHIN 15 MINUTES OF NO OCCUPANT ACTIVITY. SEE LUMINAIRE CONTROL SCHEDULE NOTE 1.
5	HAZARDOUS CLASS 2, DIV 1 SPACES: MANUAL ON / MANUAL OFF TO LUMINAIRE(S) FULL LUMEN OUTPUT.
6	TYPICAL STORAGE/TOOL/CUSTODIAN SPACE: MANUAL ON. AUTO-OFF WITHIN 15 MINUTES OF NO OCCUPANT ACTIVITY. PROVIDE LINE VOLTAGE OR LOW VOLTAGE SWITCH(ES) AS INDICATED ON LIGHTING PLANS.
7	TYPICAL EXTERIOR BUILDING CANOPY AND FACADES: PHOTOCELL CONTROLLED ON. AUTO OFF BY PHOTOCELL WHEN SUFFICIENT DAYLIGHT IS SENSED.

LUMINAIRE CONTROL SCHEDULE GENERAL NOTES:

A. WHERE LUMINAIRE(S) ARE SHOWN TO BE EMERGENCY LUMINAIRES PROVIDE ASSOCIATED APPURTENANCES (UL924, EMERGENCY LIGHTING CONTROL UNITS, ETC.). EMERGENCY LUMINAIRE(S) TO OPERATE AS NORMAL LUMINAIRES DURING NORMAL OPERATIONS. EMERGENCY LUMINAIRES MUST OVERRIDE ANY LOCAL CONTROL DURING A EMERGENCY SITUATION.

LUMINAIRE CONTROL SCHEDULE NOTES:

1. PROVIDE ALL POWER CONNECTIONS, EQUIPMENT AND ASSOCIATED APPURTENANCES (LOW VOLTAGE CONTROL CABLING, DIGITAL ROOM CONTROLLERS, LOW VOLTAGE SWITCHES, RELAYS, POWER SUPPLIES, ETC.) REQUIRED TO CONTROL SPACE OPERATION(S) AS DESCRIBED IN THIS SCHEDULE.
2. LOCATE ROOM CONTROLLERS IN ROOMS WITH GWB CEILINGS ABOVE CEILING, ADJACENT TO ACCESS PANEL.

LUMINAIRE SCHEDULE

LUMINAIRE TYPE	DESCRIPTION	PLATE	LAMP TYPE	WATTS	LUMENS	VOLTAGE	MOUNTING	NOTES
A3	2X4 VOLUMETRIC LUMINAIRE, WHITE FINISH	NL-1	LED	30 W	3000	277 V	RECESSED CEILING	
B3	2X2 VOLUMETRIC LUMINAIRE, WHITE FINISH	NL-1	LED	26 W	3300	277 V	RECESSED CEILING	
D1	6" OPEN DOWNLIGHT, WHITE FINISH	NL-12	LED	6 W	500	277 V	RECESSED CEILING	
E2	HAZARDOUS LOCATION EMERGENCY BATTERY UNIT	LP-3	LED	4 W	840	277 V	WALL MOUNTED AT 8'-0" AFF, UON	3
H1	HIGH BAY, HAZARDOUS LOCATION, WHITE FINISH	LP-1	LED	60 W	10200	277 V	PENDANT MOUNTED AT 18'-0", UON.	3
S1	1X4 INDUSTRIAL LED STRIP LUMINAIRE, WHITE FINISH	NL-23	LED	19 W	3000	277 V	SURFACE CEILING	
S3	1X4 INDUSTRIAL LED STRIP LUMINAIRE, WHITE FINISH	NL-23	LED	19 W	3000	277 V	PENDANT MOUNTED AT 9'-0", UON	
S5	HAZARDOUS LOCATION LED LIGHT	LP-2	LED	50 W	5000	277 V	SURFACE CEILING	3
W1	LED WALL PACK WITH INTEGRAL PHOTOCELL, BRONZE FINISH	XL-10	LED	35 W	4000	277 V	SURFACE MOUNTED 8'-0" AFG	
W2	LED WALL PACK WITH INTEGRAL PHOTOCELL, BRONZE FINISH	XL-10	LED	73 W	7000	277 V	SURFACE MOUNTED 17'-6" AFG	2
X	LED EXIT SIGN WITH UNIVERSAL MOUNTING	NL-28	LED	5 W		277 V	UNIVERSAL	1
X2	HAZARDOUS LED EXIT SIGN WITH UNIVERSAL MOUNTING	LP-4	LED	5 W		277 V	UNIVERSAL	1, 3

GENERAL LUMINAIRE SCHEDULE NOTE:

A. WHERE LUMINAIRE ARE SHOWN AS HALF SHADED (EMERGENCY), PROVIDE FIXTURE WITH INTEGRAL EMERGENCY BATTERY PACK .
B. SEE LUMINAIRE CONTROL SCHEDULE, THIS SHEET FOR LUMINAIRE DIMMING AND CONTROL PERFORMANCE.
C. PROVIDE LUMINAIRES WITH 4000K CORRELATED COLOR TEMPERATURE.
D. SEE SHEETS EL501A-EL502A FOR LUMINIARE "PLATE(S)".

LIGHTING CONTACTOR DESCRIPTION:

PROVIDE 20 AMP RATED LIGHTING CONTACTOR WITH MULTI-POLE, ELECTRONICALLY OPERATED, MECHANICALLY HELD TYPE FUNCTION. PROVIDE ONE CONTACT PER EACH CIRCUIT AS INDICATED ON LIGHTING PLANS, PLUS 2 SPARE CONTACTS FOR FUTURE EXPANSION. CONTACTOR VOLTAGE AS INDICATED BELOW. PROVIDE "HAND-OFF-AUTO" MAINTAINED CONTACT CONTROL STATION AND PHOTOCELL SWITCH. "HAND-OFF-AUTO" SHALL PROVIDE OVERRIDE CAPABILITIES FOR MAINTENANCE PURPOSES. PHOTOCELL SWITCH CONTROLLED VIA 120/277V RATED EXTERIOR PHOTOCELL SENSOR. SENSOR MOUNTED AS DESCRIBED BELOW. THE ABOVE MENTIONED ITEMS MUST BE MOUNTED WITHIN A SINGLE, NEMA 1 TYPE ENCLOSURE, UON. AUTO-ON AT DUSK WITH FULL LUMEN OUTPUT, AUTOMATICALLY TURN OFF WHEN SUFFICIENT DAYLIGHT IS AVAILABLE.

LIGHTING CONTACTOR "LC1" (LOCATED IN RM 122) - 277V CONTACTOR COIL, SURFACE MOUNT PHOTOCELL SENSOR (LOCATED ON EL101A) ON BUILDING WITH SENSOR ORIENTED TO MANUFACTURER'S RECOMMENDATIONS.

LUMINAIRE SCHEDULE NOTES:

1. PROVIDE RED LETTERS. SEE LIGHTING FLOORPLANS FOR NUMBER OF FACES AND CHEVRONS.
2. PROVIDE LUMINAIRE WITH TYPE III DISTRIBUTION.
3. LUMINAIRE MUST BE LISTED FOR HAZARDOUS LOCATION REQUIREMENTS FOR CLASS II, DIV 1 PER NFPA 70, ARTICLE 502.

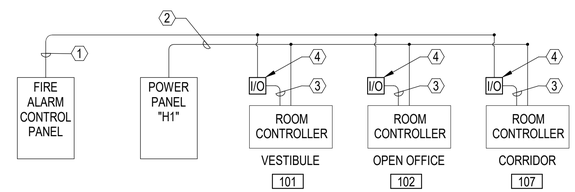

#	FIRE ALARM INTERFACE CONCEPTUAL SCHEMATIC
1	FIRE ALARM SIGNAL LOOP. UTILIZE RELAY IN FIRE ALARM CONTROL PANEL.
2	CIRCUIT CONDUCTORS FROM SOURCE PANELBOARD. SEE LIGHTING AND POWER FLOOR PLANS AND PANELBOARD SCHEDULES FOR CIRCUIT DETAILS.
3	MANUFACTURER RECOMMENDED TWISTED PAIR NETWORK CABLE WITH RJ-45 TERMINATIONS.
4	INPUT/OUTPUT DEVICE TO RECEIVE SIGNAL FROM FIRE ALARM CONTROL PANEL RELAY. UL924 DEVICE

OPERATIONAL NARRATIVE

- ROOM CONTROLLERS OPERATE AS PER THE LIGHTING CONTROL DESCRIPTION LISTED INDICATED ON THE LIGHTING PLANS.
- WHEN THE FIRE ALARM IS ACTIVATED, THE FIRE ALARM CONTROL PANEL OPERATES A RELAY TO CHANGE THE STATUS OF THE AUXILIARY CONTACT CIRCUIT TO THE ROOM CONTROLLER INPUT/OUTPUT SENSORS. COORDINATE NORMALLY-OPEN OR NORMALLY-CLOSED REQUIREMENT WITH LIGHTING CONTROL SYSTEM MANUFACTURER.
- UPON RECEIVING THE FIRE ALARM SIGNAL THROUGH THE INPUT/OUTPUT DEVICE, THE ROOM CONTROLLER OVERRIDES THE ROOM SETTINGS AND CONTROL DEVICES TO TURN ON LIGHTING IN THE ROOM TO 100% OUTPUT.
- UPON DEACTIVATION OF THE FIRE ALARM SIGNAL, THE ROOM CONTROLLER RETURNS TO THE NORMAL OPERATION AND CONTROL OF THE ROOM.
- THE REQUIREMENT FOR FIRE ALARM INTERFACE APPLIES TO ALL SPACES THAT ARE REGULARLY OCCUPIED AND/OR ARE INCLUDED IN THE PATH OF EGRESS.

B3 FIRE ALARM INTERFACE CONCEPTUAL SCHEMATIC

NOT TO SCALE

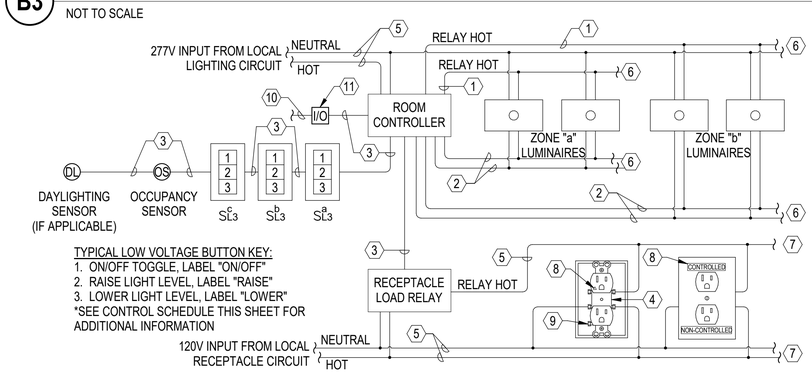

TYPICAL LOW VOLTAGE BUTTON KEY:
1. ON/OFF TOGGLE, LABEL "ON/OFF"
2. RAISE LIGHT LEVEL, LABEL "RAISE"
3. LOWER LIGHT LEVEL, LABEL "LOWER"
*SEE CONTROL SCHEDULE THIS SHEET FOR ADDITIONAL INFORMATION

NOTE: NOT ALL COMPONENTS SHOWN ARE REQUIRED IN EVERY APPLICATION IN THE WORK.

#	TYPICAL ROOM CONTROLLER DIAGRAM WITH RECEPTACLE CONTROL NOTES:
1	RELAY CONTROLLED LINE VOLTAGE CONDUCTORS.
2	0-10V ANALOG DIMMING CONDUCTORS.
3	MANUFACTURER RECOMMENDED TWISTED PAIR NETWORK CABLE WITH RJ-45 TERMINATIONS.
4	BREAK COMMON FEED FINS ON HOT SIDE TO SEPARATE TOP AND BOTTOM RECEPTACLE CONNECTION, TYPICAL.
5	LINE VOLTAGE CONDUCTORS FROM SOURCE CIRCUIT.
6	TO ADDITIONAL LUMINAIRES ON CIRCUIT.
7	TO ADDITIONAL RECEPTACLES ON CIRCUIT.
8	PROVIDE RECEPTACLE WITH VISIBLE MARKING TO INDICATE WHICH PLUG CONNECTION IS CONTROLLED BY OCCUPANCY SENSOR.
9	PROVIDE WITH ISOLATED GROUND AS INDICATED ON FLOOR PLANS. IN GENERAL, OFFICE RECEPTACLES SERVING COMPUTER, PRINTER, AND OTHER OFFICE ELECTRONICS SHALL HAVE ISOLATED GROUND. COORDINATE WITH SOURCE PANELBOARD.
10	CONTROL VOLTAGE CONDUCTORS FROM FIRE ALARM NOTIFICATION RELAY.
11	FIRE ALARM INTERFACE INPUT/OUTPUT DEVICE.

A3 TYPICAL ROOM CONTROLLER DIAGRAM WITH RECEPTACLE CONTROL

NOT TO SCALE

SYM	DESCRIPTION	DATE	APPR

NAVFAC

SEAL

A/E INFO

APPROVED
FOR COMMANDER NAVFAC

ACTIVITY
Approved by LCDR VINCE DEL GRECO, ROICC with PWD YORKTOWN, via Email.

SATISFACTORY TO DATE 03/26/2026

DES CPO | DRW CPO | CHK JDU
PM/DM MME/WJW
BRANCH MANAGER WRB
CHIEF ENG/ARCH JWJ
FIRE PROTECTION HPN

DEPARTMENT OF THE NAVY
NAVAL FACILITIES ENGINEERING SYSTEMS COMMAND
MIDLANT DC CORE
NAVAL FACILITIES ENGINEERING SYSTEMS COMMAND - MID-ATLANTIC
NAVAL STATION - NORFOLK, VA
NAVAL WEAPONS STATION
YORKTOWN, VIRGINIA
P171 WEAPON MAGAZINES
SEGREGATION FACILITIES
LUMINAIRE SCHEDULES AND DIAGRAMS

SCALE: AS NOTED
EPROJECT NO.: 1737010
CONSTR. CONTR. NO.
NAVFAC DRAWING NO. 12942127
SHEET 449 OF 499
EL601A

DRAWFORM REVISION: 25 AUGUST 2020

4/1/2026 2:24:45 PM EL601A
C:\Revit Local Files\P171-1737010-E-R21-SEG_dayton.obrien.rvt

ELECTRICAL SHEET NOTES

A. COORDINATE WITH INTERIOR FURNITURE PLANS IF101A AND IF102A PRIOR TO ELECTRICAL ROUGH-IN FOR EQUIPMENT. SMALL ARMS AND BOMBS SEGREGATION BUILDINGS ARE IDENTICAL BESIDE EQUIPMENT LAYOUT IN ROOM 102. SEE A1/EP401A FOR ADDITIONAL INFORMATION.

B. ROOM(S) 105,106,113,114,115,116,117,118 AND 119 ARE DESIGNATED AS HAZARDOUS LOCATION, CLASS 2, DIV 1 AND MUST COMPLY WITH NFPA 70, ARTICLE 502.

C. PROVIDE TESTED FIRE RESISTANCE RATED PENETRATION ASSEMBLIES. REFERENCE SHEET GI101A FOR FIRE RESISTANCE RATED SEPARATION LOCATIONS AND RATINGS.

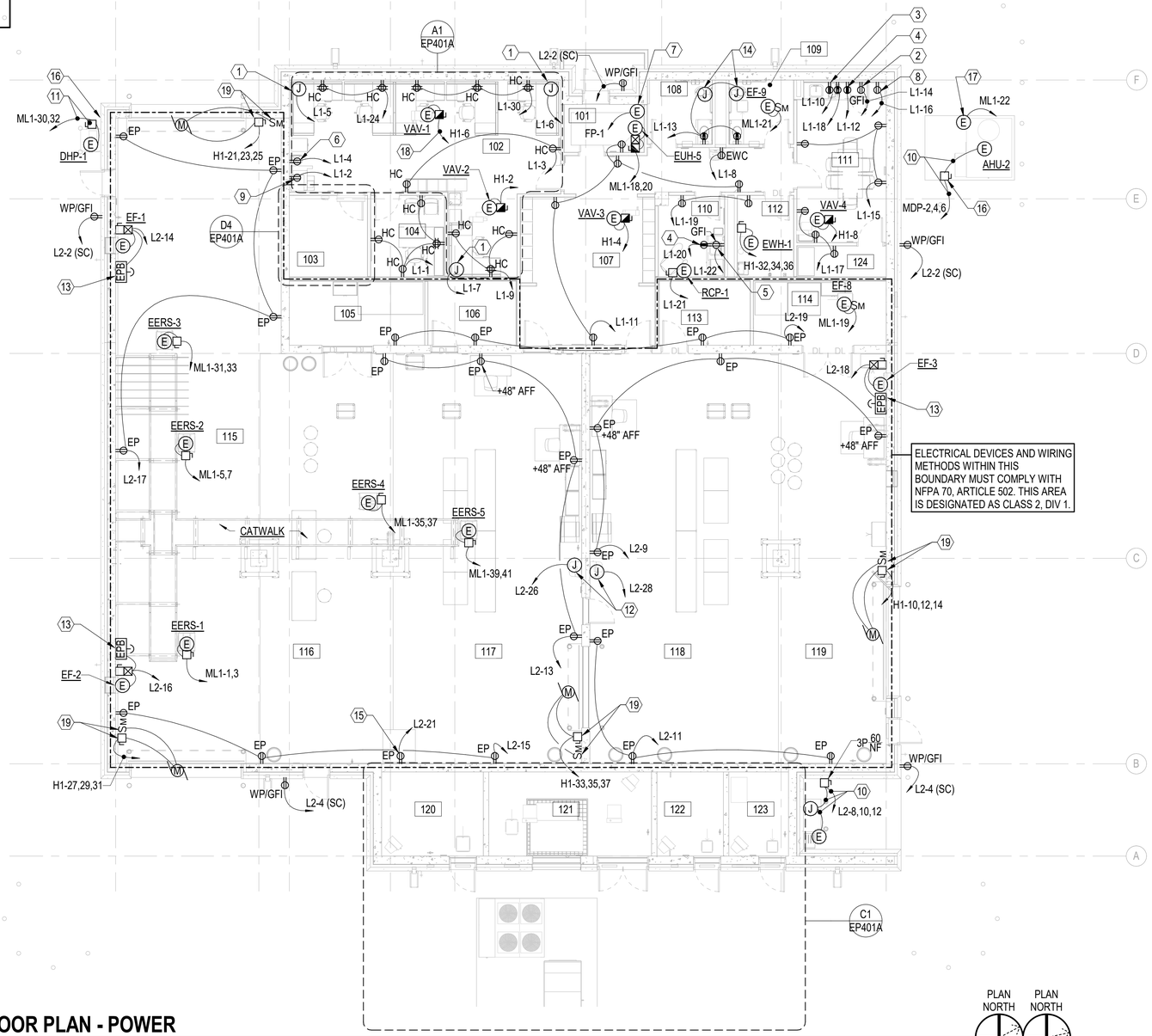

FLOOR PLAN - POWER

1/8" = 1'-0"

PLAN NORTH — BLDG 1

PLAN NORTH — BLDG 2

ELECTRICAL KEYNOTES

#	
1	JUNCTION BOX FOR SYSTEMS FURNITURE CONNECTION. FLUSH MOUNT 18" AFF.
2	REFRIGERATOR, 120V. MOUNT 48" AFF.
3	COFFEE MACHINE, 120V.
4	MICROWAVE, 120V.
5	UNDER CABINET REFRIGERATOR, 120V.
6	SHREDDER, 120V.
7	FACP. 120V.
8	ICE MACHINE, 120V.
9	PRINTER, 120V.
10	3#6, 1#10GND, 3/4"C.
11	3#10, 1#10GND, 1/2"C.
12	EMERGENCY SHOWER AND EYE WASH STATION. PROVIDE JUNCTION BOX FOR AUDIBLE AND VISUAL ALARM. COORDINATE JUNCTION BOX LOCATION WITH MANUFACTURER RECOMMENDATIONS PRIOR TO ROUGH-IN.
13	EMERGENCY PUSH BUTTON. KILLS POWER TO DEVICE UPON ACTIVATION. MOUNT +48" AFF. REFER TO MECHANICAL FOR ADDITIONAL INFORMATION.
14	CONNECTION FOR AUTOMATIC FAUCET AND FLUSH VALVES. COORDINATE EXACT LOCATION WITH PLUMBING CONTRACTOR.
15	PALETT SCALE, 120V.
16	PROVIDE FREESTANDING STRUCTURAL SUPPORT FOR DISCONNECT. SEE DETAIL A3/EP401A.
17	120V CIRCUIT FOR MECH UNIT POWERED RECEPTACLES.
18	2#10, 1#10GND, 1/2"C.
19	OVERHEAD DOOR CONTROLLER SWITCH. COORDINATE EXACT REQUIREMENTS WITH OVERHEAD DOOR MANUFACTURER. PROVIDE DISCONNECT IN NEMA 9 ENCLOSURE. EQUIPMENT MUST BE LISTED FOR CLASS 2, DIV 1.

ROOM SCHEDULE

ROOM NUMBER	ROOM NAME
101	VESTIBULE
102	OPEN OFFICE
103	SERVER
104	SHOP LEAD
105	GENERAL STORAGE
106	SECURE TOOL ROOM A
107	CORRIDOR
108	TOILET
109	TOILET
110	MOTHERS ROOM
111	PLANNING ROOM
112	CUSTODIAN
113	SECURE TOOL ROOM B
114	GENERAL STORAGE
115	CONTAINER TRANSFER BAY A
116	SEGREGATION CELL A
117	OPEN SEGREGATION AREA A
118	OPEN SEGREGATION AREA B
119	SEGREGATION CELL B
120	SPRINKLER ROOM
121	MECHANICAL ROOM
122	ELECTRICAL ROOM
123	AIR
124	STOR.

GRAPHIC SCALE(S)

1/8" = 1' - 0" 0 5' 10' 15' 30'

SYM	DESCRIPTION	DATE	APPR

SEAL

A/E INFO

APPROVED

FOR COMMANDER NAVFAC

ACTIVITY: Approved by LCDR VINCE DEL GRECO, ROICC with PWD YORKTOWN, via Email.

SATISFACTORY TO DATE 03/26/2026

DES CPO | DRW CPO | CHK JDU

PM/DM MME/WJW

BRANCH MANAGER WRB

CHIEF ENG/ARCH JWJ

FIRE PROTECTION HPN

DEPARTMENT OF THE NAVY
NAVAL FACILITIES ENGINEERING SYSTEMS COMMAND
MIDLANT DC CORE
NAVAL FACILITIES ENGINEERING SYSTEMS COMMAND - MID-ATLANTIC
NAVAL STATION - NORFOLK, VA
NAVAL WEAPONS STATION YORKTOWN, VIRGINIA
P171 WEAPON MAGAZINES SEGREGATION FACILITIES
FLOOR PLAN - POWER

SCALE: AS NOTED

EPROJECT NO.: 1737010

CONSTR. CONTR. NO.

NAVFAC DRAWING NO. 12942128

SHEET 450 OF 499

EP101A

DRAWFORM REVISION: 25 AUGUST 2020

4/1/2026 2:24:48 PM EP101A
C:\Revit Local Files\P171-1737010-E-R21-SEG_clayton.obrien.rvt

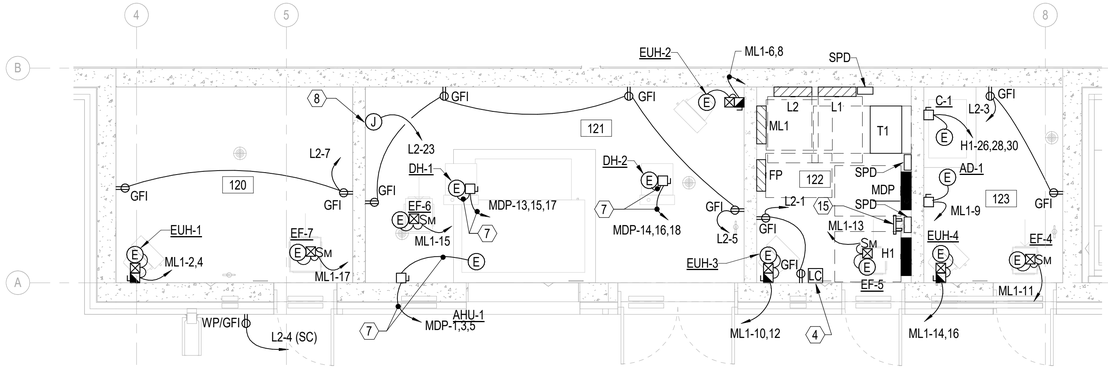

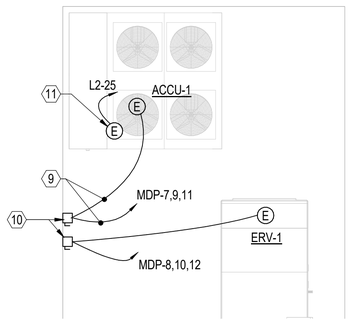

C1 ENLARGED PLAN - SPRINKLER RM 120, MECH RM 121, ELEC RM 122 AND AIR RM 123

1/4" = 1'-0" (EP101A)

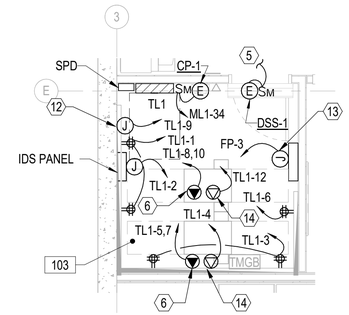

D4 ENLARGED PLAN - SERVER RM 103

1/4" = 1'-0" (EP101A)

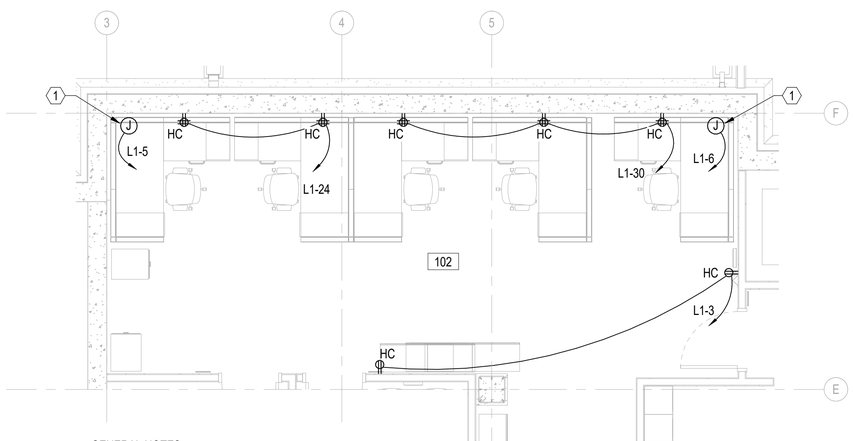

GENERAL NOTES:

1. PLAN INDICATES DIFFERENCES BETWEEN SMALL ARMS BUILDING AND BOMBS BUILDING FOR ROOM 102.
2. PROVIDE OUTLETS/DEVICES FOR SMALL ARMS BUILDING FOR ALL OTHER SPACES AS INDICATED ON EP101A.

A1 ENLARGED PLAN - RM 102 - SMALL ARMS BUILDING

1/4" = 1'-0" (EP101A)

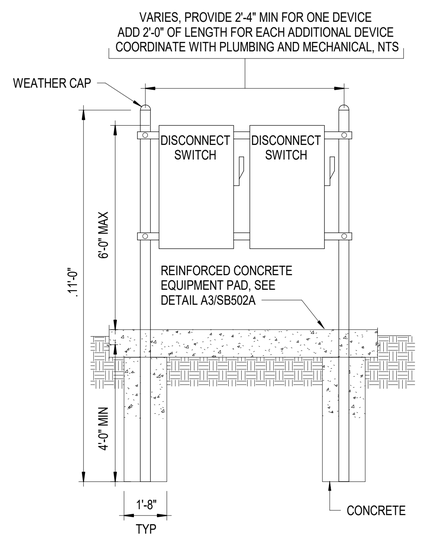

ELECTRICAL EQUIPMENT RISER GENERAL NOTES:

1. PROVIDE 4" DIAMETER STAINLESS STEEL CONDUIT FOR VERTICAL FRAME SUPPORTS.
2. PROVIDE STAINLESS STEEL HARDWARE.
3. PROVIDE 1 1/2" X 1 1/2" COLD FORMED CHANNEL SUPPORT SYSTEM FOR HORIZONTAL MEMEMBERS.
4. PROVIDE NEMA 4X STAINLESS STEEL EQUIPMENT ENCLOSUSRES.
5. PROVIDE RGS WITH A HIGH PERFORMANCE COATING OT STEEL FOR ABOVE GROUND CONDUIT.
6. DIMENSIONS OF EQUIPMENT ENCLOSURES MAY VARY DEPENDING ON MANUFACTURER AND MODEL PROVIDED BY CONTRACTOR. CONTRACTOR SHALL USE THE GENERAL LAYOUT PROVIDED HERE FOR MOUNTING OF EQUIPMENT.
7. EQUIPMENT ENCLOSURE SIZE AND NUMBER OF DEVICES THAT REQUIRE ENCLOSURE AND SUPPORT MAY VARY. PROVIDE HORIZONTAL SUPPORT NUMBUER AND SPACING TO ALIGN HORIZONTAL DEVICES CENTERLINES. COORDINATE WITHPLUMBING AND MECHANICAL DRAWINGS TO ACCOMMODATE EXTERIOR DEVICES TO BE MOUNTED ON SUPPORT FRAMES.

A3 TYPICAL FREESTANDING DISCONNECT SUPPORT DETAIL

NOT TO SCALE

ELECTRICAL KEYNOTES

#	
1	JUNCTION BOX FOR SYSTEMS FURNITURE CONNECTION. FLUSH MOUNT 18" AFF.
2	PRINTER, 120V.
3	SHREDDER, 120V.
4	LIGHTING CONTACTOR, "LC1".
5	FED BY ASSOCIATED OUTDOOR UNIT.
6	PROVIDE DEDICATED 20A (L6-20) RECEPTACLE FOR TELECOM RACK. MOUNT RECEPTACLE TO CABLE TRAY LOCATED ABOVE TELECOM RACK.
7	3#10, 1#10GND, 1/2"C.
8	DDC PANEL, 120V.
9	3#4, 1#10GND, 1-1/4"C.
10	PROVIDE FREESTANDING STRUCTURAL SUPPORT FOR DISCONNECT. SEE DETAIL A3/EP401A.
11	120V CIRCUIT FOR MECH UNIT POWERED RECEPTACLES.
12	120V CIRCUIT FOR AMI METER.
13	120V CIRCUIT FOR DAS EQUIPMENT.
14	PROVIDE DEDICATED 20A (L5-20) RECEPTACLE FOR TELECOM RACK. MOUNT RECEPTACLE TO CABLE TRAY LOCATED ABOVE TELECOM RACK.
15	MAIN BUILDING GROUND BAR.

GRAPHIC SCALE(S)

1/4" = 1' - 0" 0 1' 5' 10' 15'

SYM	DESCRIPTION	DATE	APPR

SEAL

A/E INFO

APPROVED

FOR COMMANDER NAVFAC

ACTIVITY
Approved by LCDR VINCE DEL GRECO, ROICC with PWD YORKTOWN, via Email.

SATISFACTORY TO DATE 03/26/2026

DES CPO DRW CPO CHK JDJ
PM/DM MME/WJW
BRANCH MANAGER WRB
CHIEF ENG/ARCH JWJ
FIRE PROTECTION HPN

DEPARTMENT OF THE NAVY
NAVAL FACILITIES ENGINEERING SYSTEMS COMMAND
MIDLANT DC CORE
NAVAL FACILITIES ENGINEERING SYSTEMS COMMAND - MID-ATLANTIC
NAVAL STATION - NORFOLK, VA
NAVAL WEAPONS STATION
YORKTOWN, VIRGINIA
P171 WEAPON MAGAZINES
SEGREGATION FACILITIES
ENLARGED PLANS AND DETAILS

SCALE: AS NOTED
EPROJECT NO.: 1737010
CONSTR. CONTR. NO.
NAVFAC DRAWING NO. 12942129
SHEET 451 OF 499
EP401A

DRAWFORM REVISION: 25 AUGUST 2020

4/6/2026 2:37:04 PM EP401A
C:\Revit Local Files\P171-1737010-E-R21-SEG_clayton.obrien.rvt

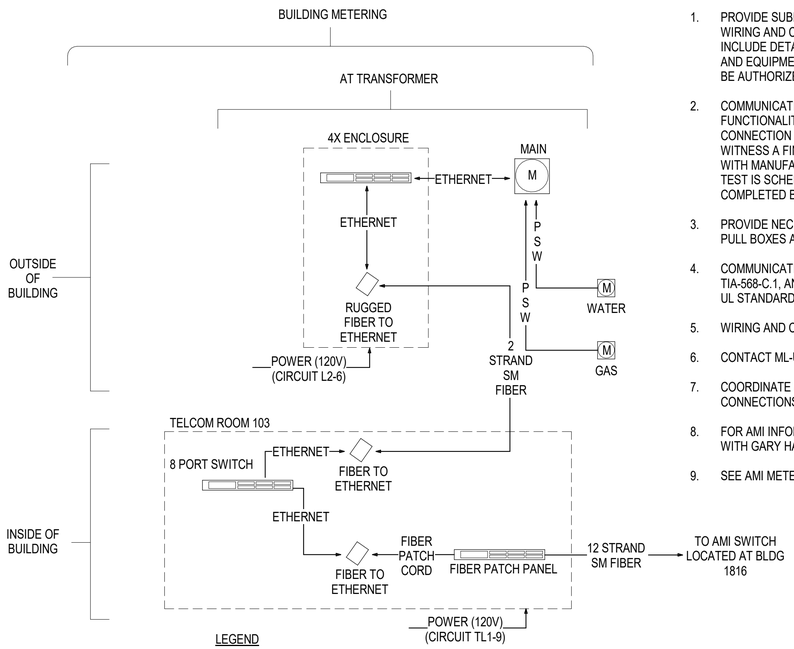

LEGEND

ETHERNET - CAT 6 CABLE (MAX 295' LENGTH)
PSW - #18 SHIELDED TWISTED PAIR WIRING (MAX 1000' LENGTH)
MAIN - SHARK 270 (SHARK270-9S-60-20-V4-INP1005-PO1S-X)

NOTES:

1. PROVIDE SUBMITTALS FOR PANELS, SWITCHES, POWER SUPPLY, WIRING AND CONDUIT TYPES AND TRANSFORMER. SUBMITTAL TO ALSO INCLUDE DETAILS FOR WIRING WITHIN THE COMMUNICATIONS PANELS AND EQUIPMENT AND WIRING LABELING. ALL NETWORK DEVICES MUST BE AUTHORIZED BY ML-CIO FOR INTEGRATION INTO THE AMI NETWORK.
2. COMMUNICATION PATHS MUST BE TESTED FOR PROPER FUNCTIONALITY FROM THE METER TO THE AMI COMMUNICATIONS CONNECTION POINT. ONCE PATHS WORK, UEM WILL NEED TO WITNESS A FINAL TEST. CONTRACTOR TO PROVIDE EQUIPMENT LIST WITH MANUFACTURER, MODEL NUMBER AND SERIAL NUMBERS BEFORE TEST IS SCHEDULED. FINAL INTEGRATION TO THE AMI NETWORK WILL BE COMPLETED BY THE NAVY.
3. PROVIDE NECESSARY RACEWAY SUPPORTS, FITTINGS, JUNCTION AND PULL BOXES AS REQUIRED FOR A COMPLETE INSTALLATION.
4. COMMUNICATIONS CABLING MUST BE INSTALLED IN ACCORDANCE WITH TIA-568-C.1, ANSI/TIA/EIA-568-B.2-2, TIA-568-C.3, TIA-569-B, NFPA 70, AND UL STANDARDS AS APPLICABLE.
5. WIRING AND CABLING MUST BE INSTALLED IN 1" CONDUIT AS A MINIMUM.
6. CONTACT ML-UEM AT 757-341-1195 FOR QUESTIONS OR COORDINATION.
7. COORDINATE WITH OTHER DISCIPLINES FOR CONDUIT ROUTING CONNECTIONS.
8. FOR AMI INFORMATION AND APPROVAL EQUIPMENT LIST COORDINATE WITH GARY HANES (GARY.HANES.CIV@US.NAVY.MIL / 757-341-0963).
9. SEE AMI METER MOUNTING DETAIL A1/ES504.

B1 TYPICAL AMI METERING NETWORK ONELINE DIAGRAM

NOT TO SCALE

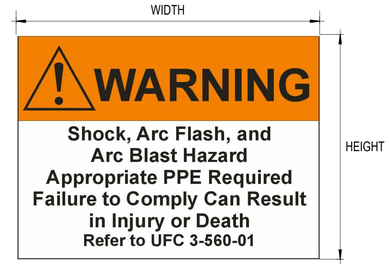

NOTES:

1. PROVIDE SELF-ADHESIVE VINYL LABEL TO AFFIX TO ELECTRICAL EQUIPMENT TO WARN OF ARC FLASH HAZARDS.
2. THE LABEL FORMAT AND TEXT SHALL BE IN ACCORDANCE WITH THE FIGURE.
3. THE LABEL SHALL BE LOCATED ON THE EQUIPMENT TO BE CLEARLY VISIBLE TO QUALIFIED PERSONS BEFORE EXAMINATION, ADJUSTMENT, SERVICING, OR MAINTENANCE OF THE EQUIPMENT.
4. THE SIZE OF THE LABEL SHALL BE MINIMUM:

EQUIPMENT TYPE	HEIGHT	WIDTH
INDOOR	2"	3"
OUTDOOR	3"	4.5"

5. A DOWNLOADABLE WINDOWS METAFILE IS AVAILABLE ON THE WHOLE BUILDING DESIGN GUIDE WEBSITE (WWW.WDBG.ORG) FOR USE IN A LABEL MAKING MACHINE.
   A. THE FILE IS LOCATED ON THE "NAVFAC CADD DETAILS" PAGE. TO NAVIGATE TO THIS LOCATION, FOLLOW: HOME > DOCUMENTS & REFERENCES > CCB > CADD LIBRARY > NAVFAC CADD RESOURCES > NAVFAC CADD DETAILS.
   B. ALTERNATIVELY, TYPE IN THE FOLLOWING ADDRESS IN INTERNET EXPLORER: HTTP://WWW.WBDG.ORG/CCB/BROWSE_CAT.PHP?C=232

GENERAL ARC FLASH WARNING LABEL

SKETCH DATE	APRIL 2015	STYLE	AF-1

FEEDER SCHEDULE

FEEDER ID	SETS	PHASE	NEUTRAL	GND	CONDUIT	REMARKS
60Y	1	2#4	1#4	1#10	1-1/4"C	
75P	1	3#1		1#6	1-1/2"C	
100Y	1	3#1	1#1	1#8	1-1/2"C	
150Y	1	3#1/0	1#1/0	1#6	1-1/2"C	
300S	1	3#400KCMIL	1#400KCMIL	1#1/0	3"C	
400Y	1	3#600 KCMIL	1#600KCMIL	1#3	4"C	

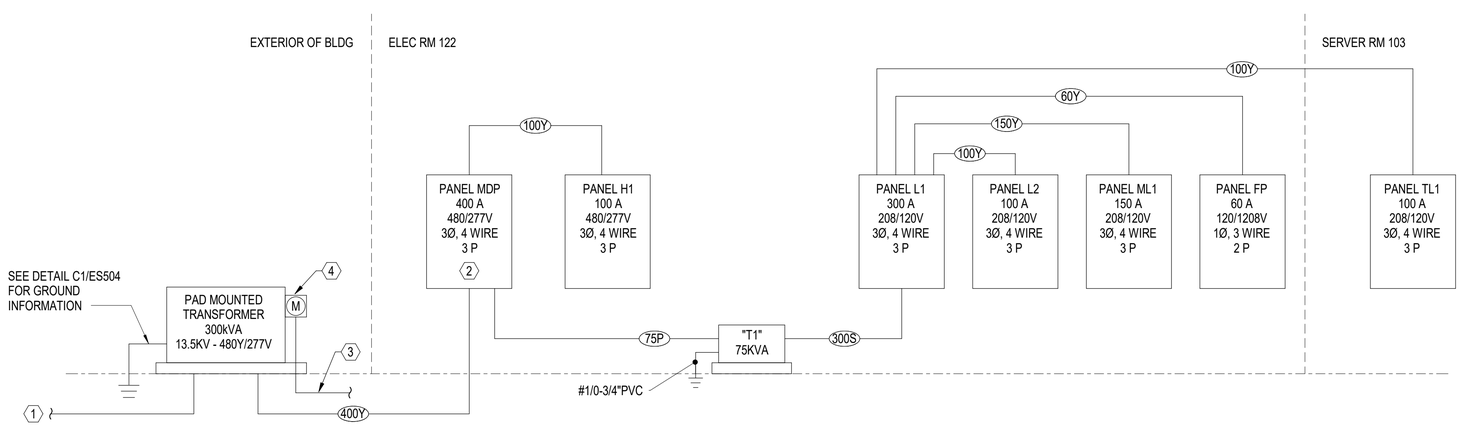

A1 POWER RISER DIAGRAM

NOT TO SCALE

ELECTRICAL SHEET NOTES

A. SEE "ES" SERIES SHEETS FOR SITE/EXTERIOIR INFORMATION ON THE SEGREGATION BUILDINGS.

ELECTRICAL KEYNOTES

1 SEE ELECTRICAL SITE SHEET ES601 FOR ADDITOINAL INFORMATION.

2 PROVIDE SERVICE ENTRANCE RATED PANELBOARD.

3 PROVIDE 1" EMPTY CONDUIT WITH PULLSTRING TO COMMUNICATIONS ROOM 103 FOR AMI FIBER CONNECTIVITY. SEE DETAIL C4/TT601A FOR ADDITIONAL INFORMATION.

4 AMI METER. SEE DETAIL B1/EP601A FOR ADDITIONAL INFORMATION.

SYM	DESCRIPTION	DATE	APPR

NAVFAC

SEAL

A/E INFO

APPROVED

FOR COMMANDER NAVFAC

ACTIVITY
Approved by LCDR VINCE DEL GRECO, ROICC with PWD YORKTOWN, via Email.

SATISFACTORY TO DATE 03/26/2026

DES CPO DRW CPO CHK JDU
PM/DM MME/WJW
BRANCH MANAGER WRB
CHIEF ENG/ARCH JWJ
FIRE PROTECTION HPN

DEPARTMENT OF THE NAVY
NAVAL FACILITIES ENGINEERING SYSTEMS COMMAND
MIDLANT DC CORE
NAVAL FACILITIES ENGINEERING SYSTEMS COMMAND - MID-ATLANTIC
NAVAL STATION - NORFOLK, VA
NAVAL WEAPONS STATION
YORKTOWN, VIRGINIA
P171 WEAPON MAGAZINES
SEGREGATION FACILITIES
POWER RISER DIAGRAM

SCALE: AS NOTED
EPROJECT NO.: 1737010
CONSTR. CONTR. NO.
NAVFAC DRAWING NO. 12942130
SHEET 452 OF 499
EP601A

DRAWFORM REVISION: 25 AUGUST 2020

4/1/2026 2:24:50 PM EP601A
C:\Revit Local Files\P171-1737010-E-R21-SEG_clayton.obrien.rvt

EQUIPMENT CONNECTION SCHEDULE

EQUIPMENT DESIGNATION	DESCRIPTION	LOAD RATING	VOLTAGE	PHASES	DISCONNECT SWITCH NO. OF POLES	DISCONNECT SWITCH AMPS	DISCONNECT SWITCH FUSE	DISCONNECT SWITCH NEMA RATING	REMARKS
ACCU-1	AIR COOLED CONDENSING UNIT	49.0 AMPS	480 V	3	3	60		NEMA 4X	
AD-1	AIR DRYER	4.2 A	120 V	1	2	30		NEMA 4X	
AHU-1	AIR HANDLER UNIT	8.8 AMPS	480 V	3	3	30		NEMA 4X	
AHU-2	AIR HANDLER UNIT	41.0 AMPS	480 V	3	3	60		NEMA 4X	
C-1	AIR COMPRESSOR	7.6 AMPS	480 V	3	3	30		NEMA 4X	
CP-1	CONDENSATE PUMP	0.18 AMPS	120 V	1	2	30		NEMA 1	NOTE 2
DH-1	ELECTRIC DUCT HEATER	24.1 AMPS	480 V	3	3	30		NEMA 4X	
DH-2	ELECTRIC DUCT HEATER	24.1 AMPS	480 V	3	3	30		NEMA 4X	
DHP-1	DUCTLESS HEAT PUMP (OUTDOOR UNIT)	10.0 AMPS	208 V	1	2	30		NEMA 4X	
DSS-1	DUCTLESS HEAT PUMP (INDOOR UNIT)	1.0 AMPS	208 V	1	2	30		NEMA 1	NOTE 1
EERS-1	ENGINE EXHAUST REMOVAL SYSTEM	6.5 AMPS	208 V	1	2	30		NEMA 9	
EERS-2	ENGINE EXHAUST REMOVAL SYSTEM	6.5 AMPS	208 V	1	2	30		NEMA 9	
EERS-3	ENGINE EXHAUST REMOVAL SYSTEM	6.5 AMPS	208 V	1	2	30		NEMA 9	
EERS-4	ENGINE EXHAUST REMOVAL SYSTEM	6.5 AMPS	208 V	1	2	30		NEMA 9	
EERS-5	ENGINE EXHAUST REMOVAL SYSTEM	6.5 AMPS	208 V	1	2	30		NEMA 9	
EF-1	EXHAUST FAN	2.9 AMPS	120 V	1	2	30		NEMA 9	
EF-2	EXHAUST FAN	2.9 AMPS	120 V	1	2	30		NEMA 9	
EF-3	EXHAUST FAN	2.9 AMPS	120 V	1	2	30		NEMA 9	
EF-4	EXHAUST FAN	1.0 AMPS	120 V	1	1	30	NOTE 2	NOTE 2	NOTE 2
EF-5	EXHAUST FAN	1.0 AMPS	120 V	1	1	30	NOTE 2	NOTE 2	NOTE 2
EF-6	EXHAUST FAN	4.4 AMPS	120 V	1	2	30		NOTE 2	NOTE 2
EF-7	EXHAUST FAN	1.0 AMPS	120 V	1	1	30	NOTE 2	NOTE 2	NOTE 2
EF-8	EXHAUST FAN	1.0 AMPS	120 V	1	1	30	NOTE 3	NOTE 3	NOTE 2
EF-9	EXHAUST FAN	1.0 AMPS	120 V	1	1	30	NOTE 2	NOTE 2	NOTE 2
ERV-1	ENERGY RECOVERY VENTILATOR	11.8 AMPS	480 V	3	3	30		NEMA 4X	
EUH-1	ELECTRIC UNIT HEATER	5.8 AMPS	208 V	1	2	30			
EUH-2	ELECTRIC UNIT HEATER	5.8 AMPS	208 V	1	2	30			
EUH-3	ELECTRIC UNIT HEATER	5.8 AMPS	208 V	1	2	30			
EUH-4	ELECTRIC UNIT HEATER	5.8 AMPS	208 V	1	2	30			
EUH-5	ELECTRIC UNIT HEATER	5.8 AMPS	208 V	1	2	30			
EWH-1	ELECTRIC WATER HEATER	7.2 AMPS	480 V	3	3	30		NEMA 1	
RCP-1	RECIRCULATION PUMP	1.0 AMPS	120 V	1	2	30		NEMA 1	
VAV-1	VARIABLE AIR VOLUME	9.0 AMPS	277 V	1	2	30			
VAV-2	VARIABLE AIR VOLUME	1.8 AMPS	277 V	1	2	30			
VAV-3	VARIABLE AIR VOLUME	11.6 AMPS	277 V	1	2	30			
VAV-4	VARIABLE AIR VOLUME	10.8 AMPS	277 V	1	2	30			

GENERAL NOTE:

A. CIRCUIT BREAKER, DISCONNECT SWITCH AND WIRE SIZE SHOWN ON DRAWINGS ARE FOR REFERENCE ONLY. CIRCUIT BREAKER, DISCONNECT SWITCHES AND WIRE SIZE MAY INCREASE OR DECREASE BASED ON SYSTEM SELECTED AND INSTALLED BY CONTRACTOR. IF SYSTEM SELECTED BY CONTRACTOR IS SELECTED WITH HIGHER AMPACITY THIS MAY REQUIRE UPGRADING PANELBOARD SIZE, MAIN BREAKER AND FEEDER SIZE SERVING THE PANELBOARD.

NOTES:

1. INDOOR UNIT IS FED FROM OUTDOOR UNIT.
2. PROVIDE MOTOR RATED SWITCH FOR DISCONNECT.
3. PROIVDE MOTOR RATED SWITCH FOR DISCONNECT LISTED FOR CLASS 2, DIV 1.

PANEL MDP SCHEDULE

400 AMP BUS 400 A MCB 480/277 Wye VOLTS 3PH, 4W, SN, 60HZ MIN. 14 KAIC SURFACE MOUNTED SE RATED

CKT NO.	LOAD DESCRIPTION	COND SIZE	WIRE SIZE	BKR TRIP	A	B	C	A	B	C	BKR TRIP	WIRE SIZE	COND SIZE	LOAD DESCRIPTION	CKT NO.
1					8.8 A			41.0 A							2
3	AHU-1	1/2"	12	15		8.8 A			41.0 A		45	6	3/4"	AHU-2	4
5							8.8 A			41.0 A					6
7					49.0 A			11.8 A							8
9	ACCU-1	3/4"	4	60		49.0 A			11.8 A		15	12	1/2"	ERV-1	10
11							49.0 A			11.8 A					12
13					24.1 A			24.1 A							14
15	DH-1	1/2"	10	30		24.1 A			24.1 A		30	10	1/2"	DH-2	16
17							24.1 A			24.1 A					18
19					0.0 A			0.0 A							20
21	SPARE	--	--	20		0.0 A			0.0 A		20	--	--	SPARE	22
23							0.0 A			0.0 A					24
25					0.0 A			--			--	--	--	SPACE	26
27	SPARE	--	--	20		0.0 A			--		--	--	--	SPACE	28
29							0.0 A			--	--	--	--	SPACE	30
31	SPACE	--	--	--	--			82.4 A							32
33	SPACE	--	--	--		--			76.2 A		125	1	1-1/2"	PANEL L1 VIA XFMR "T1"	34
35	SPACE	--	--	--			--			81.4 A					36
37					1.0 A			54.1 A							38
39	SPD	1-1/4"	4	60		1.0 A			43.4 A		100	1	1-1/2"	H1	40
41							1.0 A			49.0 A					42
				TOTAL CONNECTED AMPS:	A: 295.9		B: 279.2			C: 290.1					

NOTES:

(*) PROVIDE CIRCUIT BREAKER AND LABEL CIRCUIT "SPARE" FOR SEGREGATION BUILDING 2. SEE SHEET ES107.

PANEL H1 SCHEDULE

100 AMP BUS 100 A MLO 480/277 Wye VOLTS 3PH, 4W, SN, 60HZ MIN. 14 KAIC SURFACE MOUNTED

CKT NO.	LOAD DESCRIPTION	COND SIZE	WIRE SIZE	BKR TRIP	A	B	C	A	B	C	BKR TRIP	WIRE SIZE	COND SIZE	LOAD DESCRIPTION	CKT NO.
1	LTG - RMS 101-114, 124	1/2"	12	20	4.6 A			1.8 A			20	12	1/2"	VAV-2	2
3	LTG - RMS 120-123	1/2"	12	20		0.7 A			10.8 A		20	12	1/2"	VAV-3	4
5	LTG - RMS 118,119	1/2"	12	20			2.7 A			14.4 A	25	10	1/2"	VAV-1	6
7	LTG - 116, 115, 117	1/2"	12	20	5.4 A			10.8 A			20	12	1/2"	VAV-4	8
9	LTG - EXT BLDG	1/2"	12	20		1.5 A			3.3 A						10
11	LTG - EXT BLDG	1/2"	12	20			0.8 A			3.3 A	20	12	3/4"	OVERHEAD DOOR	12
13	SPARE	--	--	20	0.0 A			3.3 A							14
15	*LTG - EXT. SITE - BLDG 1	1"	10	20		1.6 A			0.0 A		20	--	--	SPARE	16
17	**LTG - EXT. SITE - BLDG 2	1"	10	20			1.5 A			0.0 A	20	--	--	SPARE	18
19	**LTG - EXT. SITE - BLDG 2	1"	10	20	2.2 A			0.0 A			20	--	--	SPARE	20
21						3.3 A			--		--	--	--	SPACE	22
23	OVERHEAD DOOR	3/4"	12	20		3.3 A				--	--	--	--	SPACE	24
25					3.3 A			7.6 A							26
27						3.3 A			7.6 A		20	12	1/2"	C-1	28
29	OVERHEAD DOOR	3/4"	12	20			3.3 A			7.6 A					30
31					3.3 A			7.2 A							32
33						3.3 A			7.2 A		20	12	1/2"	EWH-1	34
35	OVERHEAD DOOR	3/4"	12	20			3.3 A			7.2 A					36
37					3.3 A			1.0 A							38
39	SPARE	--	--	20		0.0 A			1.0 A		60	4	1-1/4"	SPD	40
41	SPARE	--	--	20			0.0 A			1.0 A					42
				TOTAL CONNECTED AMPS:	A: 54.1		B: 43.4			C: 49.0					

NOTES:

(*) PROVIDE CIRCUIT BREAKER AND LABEL CIRCUIT "SPARE" FOR SEGREGATION BUILDING 2. SEE SHEET ES107.

(**) PROVIDE CIRCUIT BREAKER AND LABEL CIRCUIT "SPARE" FOR SEGREGATION BUILDING 1. SEE SHEET ES108.

PROVIDE LIGHTING CIRCUITS WITH SURGE SUPRESSION.

PANEL L1 SCHEDULE

400 AMP BUS 300 A MCB 208/120 Wye VOLTS 3PH, 4W, SN, 60HZ MIN. 10 KAIC SURFACE MOUNTED

CKT NO.	LOAD DESCRIPTION	COND SIZE	WIRE SIZE	BKR TRIP	A	B	C	A	B	C	BKR TRIP	WIRE SIZE	COND SIZE	LOAD DESCRIPTION	CKT NO.
1	RECEPT SHOP LEAD 104	1/2"	12	20	7.5 A			5.0 A			20	12	1/2"	PRINTER RM 102	2
3	RECEPT OPEN OFFICE 102	1/2"	12	20		3.0 A			5.0 A		20	12	1/2"	SHREDDER RM 102	4
5	SYSTEMS FURNITURE 102	1/2"	12	20			9.0 A			6.0 A	20	12	1/2"	SYSTEMS FURNITURE 102	6
7	SYSTEMS FURNITURE 102	1/2"	12	20	3.0 A			5.0 A			20	12	1/2"	EWC RM 107 - NOTE 2	8
9	RECEPT OPEN OFFICE 102	1/2"	12	20		6.0 A			5.0 A		20	12	1/2"	COFFEE MACHINE RM 111	10
11	RECEPT CORRIDOR 107	1/2"	12	20			7.5 A			10.0 A	20	12	1/2"	MICROWAVE RM 111	12
13	RECEPT ROOM 108, 109	1/2"	12	20	3.0 A			10.0 A			20	12	1/2"	REFRIGERATOR RM 111	14
15	RECEPT PLANNING RM 111	1/2"	12	20		4.5 A			5.0 A		20	12	1/2"	ICE MAKER RM 111	16
17	RECEPT RM 111, 124	1/2"	12	20			4.5 A			3.0 A	20	12	1/2"	COUNTER RECEPT RM 111	18
19	RECEPT RM 110, 112	1/2"	12	20	3.0 A			5.0 A			20	12	1/2"	COUNTER RECEPT RM 112	20
21	RCP-1, RM 112	1/2"	12	20		1.0 A			5.0 A		20	12	1/2"	REFRIGERATOR RM 112	22
23	SPARE	--	--	20			0.0 A			6.0 A	20			RECEPT OPEN OFFICE 102	24
25	SPARE	--	--	20	0.0 A			5.8 A			60	4	1/2"	FP - NOTE 1	26
27	SPACE	--	--	--		--			5.8 A						28
29	SPACE	--	--	--			--			9.0 A	20			RECEPT OPEN OFFICE 102	30
31					54.2 A			71.3 A							32
33	ML1	1-1/2"	1/0	150		44.1 A			68.2 A		100	1	1-1/2"	L2	34
35							44.4 A			69.2 A					36
37					2.3 A			22.5 A							38
39	SPD	1-1/4"	4	60		2.3 A			23.7 A		100	1	1-1/2"	TL1	40
41							2.3 A			17.6 A					42
				TOTAL CONNECTED AMPS:	A: 190.2		B: 175.8			C: 187.9					

NOTES:

1. PROVIDE RED PAINTED CIRCUIT BREAKER WITH ADDITIONAL NAMEPLATE INDICATING "FIRE PROTECTION/LIFE SAFETY EQUIPMENT" ON A RED LAMINATED... NAMEPLATE WITH WHITE LETTERING.
2. PROVIDE GFCI TYPE CIRCUIT BREAKER.

SYM	DESCRIPTION	DATE	APPR

NAVFAC

SEAL

A/E INFO

APPROVED

FOR COMMANDER NAVFAC

ACTIVITY: Approved by LCDR VINCE DEL GRECO, ROICC with PWD YORKTOWN, via Email.

SATISFACTORY TO DATE 03/26/2026

DES CPO DRW CPO CHK JDU

PM/DM MME/WJW

BRANCH MANAGER WRB

CHIEF ENG/ARCH JWJ

FIRE PROTECTION HPN

DEPARTMENT OF THE NAVY
NAVAL FACILITIES ENGINEERING SYSTEMS COMMAND
MIDLANT DC CORE

NAVAL FACILITIES ENGINEERING SYSTEMS COMMAND - MID-ATLANTIC
NAVAL STATION - NORFOLK, VA

NAVAL WEAPONS STATION
YORKTOWN, VIRGINIA

P171 WEAPON MAGAZINES
SEGREGATION FACILITIES

EQUIPMENT CONNECTION SCHEDULE AND PANELBOARD SCHEDULES

SCALE: AS NOTED

EPROJECT NO.: 1737010

CONSTR. CONTR. NO.

NAVFAC DRAWING NO. 12942131

SHEET 453 OF 499

EP701A

DRAWFORM REVISION: 25 AUGUST 2020

4/1/2026 2:24:51 PM EP701A
C:\Revit Local Files\P171-1737010-E-R21-SEG_clayton.obrien.rvt

PANEL L2 SCHEDULE

100 AMP BUS 100 A MLO 208/120 Wye VOLTS 3PH, 4W, SN, 60HZ MIN. 10 KAIC SURFACE MOUNTED

CKT NO.	LOAD DESCRIPTION	COND SIZE	WIRE SIZE	BKR TRIP	A	B	C	A	B	C	BKR TRIP	WIRE SIZE	COND SIZE	LOAD DESCRIPTION	CKT NO.
1	RECEPT ELECTRICAL RM...	1/2"	12	20	3.0 A			4.5 A			20	12	1/2"	EXT. RECEPTS	2
3	RECEPT AIR RM 123	1/2"	12	20		3.0 A			4.5 A		20	12	1/2"	EXT. RECEPT	4
5	RECEPT MECHANICAL RM...	1/2"	12	20			6.0 A			3.0 A	20	12	1/2"	AMI METER	6
7	RECEPT SPRINKLER RM 120	1/2"	12	20	3.0 A			43.7 A			60	6	3/4"	FORKLIFT CHARGER	8
9	RECEPT RM 119, 118	1/2"	12	20		6.0 A			43.7 A						10
11	RECEPT RM 119, 118	1/2"	12	20			4.5 A			43.7 A					12
13	RECEPT RM 116, 117	1/2"	12	20	6.0 A			2.9 A			20	12	1/2"	EF-1	14
15	RECEPT RM 115, 117, 116	1/2"	12	20		4.5 A			2.9 A		20			EF-2	16
17	RECEPT RM 115	1/2"	12	20			6.0 A			2.9 A	20			EF-3	18
19	RECEPT ROOM 113, 114,...	1/2"	12	20	6.0 A			0.0 A			20	--	--	SPARE	20
21	RECEPT - SCALE	1/2"	12	20		3.0 A			0.0 A		20	--	--	SPARE	22
23	DDC PANEL	1/2"	12	20			3.0 A			0.0 A	20	--	--	SPARE	24
25	RECPT - MECH EQPM	1/2"	12	20	1.5 A			5.0 A			20	12	1/2"	EYE WASH STATION RM 117	26
27	SPARE	--	--	20		0.0 A			5.0 A		20	12	1/2"	EYE WASH STATION RM 118	28
29	SPARE	--	--	20			0.0 A			--	--	--	--	SPACE	30
31	SPARE	--	--	20	0.0 A			--			--	--	--	SPACE	32
33	SPARE	--	--	20		0.0 A			--		--	--	--	SPACE	34
35	SPARE	--	--	20			0.0 A			--	--	--	--	SPACE	36
37	SPARE	--	--	20	0.0 A			--			--	--	--	SPACE	38
39	SPARE	--	--	20		0.0 A			--		--	--	--	SPACE	40
41	SPARE	--	--	20			0.0 A			--	--	--	--	SPACE	42

TOTAL CONNECTED AMPS: A: 71.3 B: 68.2 C: 69.2

NOTES:

PANEL ML1 SCHEDULE

150 AMP BUS 150 A 208/120 Wye VOLTS 3PH, 4W, SN, 60HZ MIN. 10 KAIC SURFACE MOUNTED

CKT NO.	LOAD DESCRIPTION	COND SIZE	WIRE SIZE	BKR TRIP	A	B	C	A	B	C	BKR TRIP	WIRE SIZE	COND SIZE	LOAD DESCRIPTION	CKT NO.
1	EERS-1	1/2"	12	20	6.5 A			5.8 A			20	12	1/2"	EUH-1	2
3						6.5 A			5.8 A						4
5	EERS-2	1/2"	12	20			6.5 A			5.8 A	20	12	1/2"	EUH-2	6
7					6.5 A			5.8 A							8
9	AD-1	1/2"	12	20		4.2 A			5.8 A		20	12	1/2"	EUH-3	10
11	EF-4	1/2"	12	20			1.0 A			5.8 A					12
13	EF-5	1/2"	12	20	1.0 A			5.8 A			20	12	1/2"	EUH-4	14
15	EF-6	1/2"	12	20		4.4 A			5.8 A						16
17	EF-7	1/2"	12	20			1.0 A			5.8 A	20	12	1/2"	EUH-5	18
19	EF-8	1/2"	12	20	1.0 A			5.8 A							20
21	EF-9	1/2"	12	20		1.0 A			1.5 A		20	12	1/2"	RECEPT - MECH EQPM	22
23	SPARE	--	--	20			0.0 A			--	--	--	--	SPACE	24
25	SPARE	--	--	20	0.0 A			--			--	--	--	SPACE	26
27	SPARE	--	--	20		0.0 A			--		--	--	--	SPACE	28
29	SPARE	--	--	20			0.0 A			10.0 A	20	12	1/2"	DHP-1	30
31	EERS-3	1/2"	12	20	6.5 A			10.0 A							32
33						6.5 A			0.2 A		20	12	1/2"	CP-1 - NOTE 1	34
35	EERS-4	1/2"	12	20			7.5 A			0.0 A	20	--	--	SPARE	36
37					7.5 A			--			--	--	--	SPACE	38
39	EERS-5	1/2"	12	20		7.5 A			--		--	--	--	SPACE	40
41							7.5 A			--	--	--	--	SPACE	42

TOTAL CONNECTED AMPS: A: 54.2 B: 44.1 C: 44.4

NOTES:

1. PROVIDE GFCI TYPE CIRCUIT BREAKER.

PANEL TL1 SCHEDULE

100 AMP BUS 100 A MCB 208/120 Wye VOLTS 3PH, 4W, SN, 60HZ MIN. 10 KAIC SURFACE MOUNTED

CKT NO.	LOAD DESCRIPTION	COND SIZE	WIRE SIZE	BKR TRIP	A	B	C	A	B	C	BKR TRIP	WIRE SIZE	COND SIZE	LOAD DESCRIPTION	CKT NO.
1	RECEPT SERVER 103	1/2"	12	20	6.0 A			5.0 A			20	12	1/2"	IDS PANEL	2
3	RECEPT SERVER 103	1/2"	12	20		6.0 A			10.0 A		20	12	1/2"	TELECOM RACK	4
5	TELECOM RACK	1/2"	12	20			10.0 A			3.0 A	20	12	1/2"	RECEPT SERVER 103	6
7					10.0 A			10.0 A			20			ESS RACK	8
9	AMI METER	3/4"	12	20		3.0 A			10.0 A						10
11	SPARE	--	--	20			0.0 A			10.0 A	20			ESS RACK	12
13	SPARE	--	--	20	0.0 A			--			--	--	--	SPACE	14
15	SPARE	--	--	20		0.0 A			--		--	--	--	SPACE	16
17	SPARE	--	--	20			0.0 A			--	--	--	--	SPACE	18
19	SPACE	--	--	--	--			2.3 A			60	4	1-1/4"	SPD	20
21	SPACE	--	--	--		--			2.3 A						22
23	SPACE	--	--	--			--			2.3 A					24

TOTAL CONNECTED AMPS: A: 22.5 B: 23.7 C: 17.6

NOTES:

PANEL FP SCHEDULE

100 A BUS 60 A MLO 208/120 Single VOLTS 1 PH, 3W, SN, 60HZ MIN. 10 KAIC SURFACE

CKT NO.	LOAD DESCRIPTION	COND SIZE	WIRE SIZE	BKR TRIP	A	B	A	B	BKR TRIP	WIRE SIZE	COND SIZE	LOAD DESCRIPTION	CKT NO.
1	FACP - NOTE 1	1/2"	12	20	5.0 A		--		--	--	--	SPACE	2
3	DAS SYSTEM - NOTE 1	1/2"	12	20		5.0 A		--	--	--	--	SPACE	4
5	SPARE	--	--	20	0.0 A		--		--	--	--	SPACE	6
7	SPARE	--	--	20		0.0 A		--	--	--	--	SPACE	8
9	SPARE	--	--	20	0.0 A		--		--	--	--	SPACE	10
11	SPARE	--	--	20		0.0 A		--	--	--	--	SPACE	12
13	SPARE	--	--	20	0.0 A		--		--	--	--	SPACE	14
15	SPACE	--	--	--		--		--	--	--	--	SPACE	16
17	SPACE	--	--	--	--		--		--	--	--	SPACE	18

TOTAL CONNECTED AMPS: A: 5.8 B: 5.8

NOTES:

1. PROVIDE RED PAINTED PANELBOARD WITH ADDITIONAL NAMEPLATE INDICATING "FIRE PROTECTION/LIFE SAFETY EQUIPMENT" ON A RED LAMINATED... NAMEPLATE WITH WHITE LETTERING.

SYM	DESCRIPTION	DATE	APPR

SEAL

A/E INFO

APPROVED

FOR COMMANDER NAVFAC

ACTIVITY
Approved by LCDR VINCE DEL GRECO, ROICC with PWD YORKTOWN, via Email.

SATISFACTORY TO DATE 03/26/2026

DES CPO DRW CPO CHK JDU

PM/DM MME/WJW

BRANCH MANAGER WRB

CHIEF ENG/ARCH JWJ

FIRE PROTECTION HPN

DEPARTMENT OF THE NAVY
NAVAL FACILITIES ENGINEERING SYSTEMS COMMAND
MIDLANT DC CORE
NAVAL FACILITIES ENGINEERING SYSTEMS COMMAND - MID-ATLANTIC
NAVAL STATION - NORFOLK, VA
NAVAL WEAPONS STATION
YORKTOWN, VIRGINIA
P171 WEAPON MAGAZINES
SEGREGATION FACILITIES
PANELBOARD SCHEDULES

SCALE: AS NOTED

EPROJECT NO.: 1737010

CONSTR. CONTR. NO.

NAVFAC DRAWING NO. 12942132

SHEET 454 OF 499

EP702A

DRAWFORM REVISION: 25 AUGUST 2020

4/1/2026 2:24:51 PM EP702A
C:\Revit Local Files\P171-1737010-E-R21-SEG_clayton.obrien.rvt

ELECTRICAL SHEET NOTES

A. THE LIGHTNING PROTECTION AND GROUNDING SYSTEM LAYOUT AS SHOWN IS INTENDED TO DEPICT THE AREA OF COVERAGE, BUT IS NOT REPRESENTATIVE OF ALL THE COMPONENTS REQUIRED. THE LIGHTNING PROTECTION SYSTEM DESIGNER/INSTALLER IS RESPONSIBLE FOR PROVIDING A COMPLETE SYSTEM TO MEET NAVSEA OP-5 AND NFPA 780 REQUIREMENTS. SUBMIT SHOP DRAWINGS FOR APPROVAL.

B. PROVIDE GALVANIZED STEEL POLES WITH HIGH PERFORMANCE COATING. HEIGHT OF THE POLES TO BE AS DETERMINED BY LIGHTNING PROTECTION SYSTEM DESIGNER. PROVIDE CALCULATIONS ALONG WITH PROTECTION ZONE DRAWINGS DURING SHOP DRAWING SUBMITTALS.

C. ZONE OF PROTECTION DRAWINGS SHOWN ON EG201A AND EG202A ARE FOR REFERENCE PURPOSES ONLY.

D. SEE STRUCTURAL DRAWINGS SB101A AND SB502A FOR LIGHTNING MAST FOUNDATION REQUIREMENTS.

E. SEE GROUNDING DETAILS ON SHEET EG501A AND EG502A.

F. PROVIDE COPPER ONLY MATERIALS, UON.

G. MAKE ALL BONDING CONNECTIONS TO GROUNDING GIRDLES WITH # 2/0 AWG BARE COPPER CONDUCTORS UTILIZING EXOTHERMIC WELDS OR UL LISTED COMPRESSION GROUNDING CONNECTORS, UON.

H. THE STRUCTURAL COMPONENTS OF THE BUILDING INCLUDING FOUNDATION REINFORCING BARS, WALL REINFORCING BARS, FLOOR SLAB REINFORCING BARS AND OTHER STRUCTURAL STEEL BUILDING MEMBERS MUST BE BONDED TOGETHER. ALL COMPONENTS MUST BE BONDED AT REGULAR INTERVALS ALONG THEIR INTERFACE VIA BUILT-IN ATTACHMENTS SUCH AS REBAR WELDED OR BY ADDING EXTERNAL BONDING CONDUCTORS BETWEEN COMPONENTS. THE COMPONENTS MUST BE BONDED AT LEAST EVERY 4 FEET. BONDING DISTANCES MAY VARY BASED ON FACILITY DESIGN. USE OF OTHER THAN NOMINAL BONDING DISTANCE INDICATED REQUIRES AN ELECTROMAGNETIC CHARACTERIZATION OF THE FACILITY'S TRANSFER IMPEDANCE POTENTIAL TO DETERMINE THE SPECIFIC BONDING DISTANCES.

I. THE GROUND LOOP (PRIMARY GROUNDING GIRDLE) RESISTANCE TO EARTH MUST BE MAINTAINED AT 25 OHM OR LESS. IF THIS REQUIREMENT IS NOT ACHIEVABLE, EVEN THROUGH ADDITIONAL GROUND RODS OR GRID CONDUCTOR LOOP, NOTIFY THE CONTRACTING OFFICER FOR ADDITIONAL ACTIONS TAKEN TO MINIMIZE THE RESISTANCE TO EARTH.

J. SECONDARY GROUND GIRDLE MUST BE LOCATED 3'-0" MINIMUM FROM THE BUILDING FOUNDATION AND STRUCTURE AND MINIMUM 2'-0" FROM THE BUILDING EXTERIOR DRIP LINE.

K. METALLIC CONDUIT MUST BE ROUTED UNDERGROUND FOR AT LEAST 50 FEET FROM THE STRUCTURE AND BONDED WITH MINIMUM #2/0 COPPER WIRE TO PRIMARY AND SECONDARY GROUND GIRDLE WHERE THEY CROSS.

L. PROVIDE MINIMUM #6 AWG BARE COPPER GROUND CONDUCTOR FOR ALL BONDING AND GROUND, INCLUDING THE BONDING TO ALL METAL PARTS, INCLUDING STAIR HANDRAILS, DOOR AND DOOR FRAMES, REINFORCEMENT IN ALL FLOOR/WALL, METAL AIR VENTILATOR AND LOUVERS.

M. ALL BOUNDING CONNECTIONS MUST HAVE A MAXIMUM RESISTANCE OF 1 OHM, INCLUDING AIR TERMINATION SYSTEM, DOWN CONDUCTORS TO LIGHTNING PROTECTION GROUNDING SYSTEM IN ACCORDANCE WITH IAW NAVSEA OP5, SECTION 5-4.1.

N. ALL GROUNDING ELECTRODES AND GROUND TERMINALS, INCLUDING THOSE USED FOR LIGHTNING AND STATIC PROTECTION, ELECTRICAL SERVICE, TELEPHONE AND ANTENNA SYSTEMS, AS WELL AS UNDERGROUND METALLIC PIPING AND THE METAL FRAME OF THE BUILDING MUST BE BONDED TOGETHER THROUGH THE SECONDARY GROUNDING GIRDLE. THIS BONDING CONNECTION MUST BE EXOTHERMIC WELDS. BOLTED CONNECTIONS ARE REQUIRED FOR THE ORDNANCE GROUND CONNECTION TO THE SECONDARY IN A TEST WELL. TEST POINTS MUST BE MADE ACCESSIBLE AND IDENTIFIED.

O. THE BUILDING'S STRUCTURAL STEEL SYSTEM SHALL BE MADE ELECTRICALLY CONTINUOUS THROUGH THE USE OF #2/0 AWG CU BONDING CONDUCTORS WHERE DISCONTINUITY OCCURS.

P. PRIMARY GROUND GIRDLE (LIGHTNING PROTECTION GROUND LOOP) MUST BE LOCATED MINIMUM 3'-0" OUTSIDE OF THE SECONDARY GROUNDGIRDLE. THE PRIMARY GROUND GIRDLE IS SHOWN ON THIS SHEET FOR CLARITY AND COORDINATION PURPOSES.

Q. EXTERIOR DOWN CONDUCTORS MUST USE CONNECTORS COMPATIBLE WITH ALUMINUM INSULATED PANELS. ADHESIVE TYPE CONNECTORS ARE NOT PERMITTED.

R. SEE FENCE GROUNDING DETAIL ON ES505.

S. DIMENSIONS SHOWN ARE FOR REFERENCE PURPOSES ONLY. COORDINATE WITH APPROVED SHOP DRAWINGS AND CIVIL PLANS PRIOR TO LIGHTNING MAST INSTALLATION.

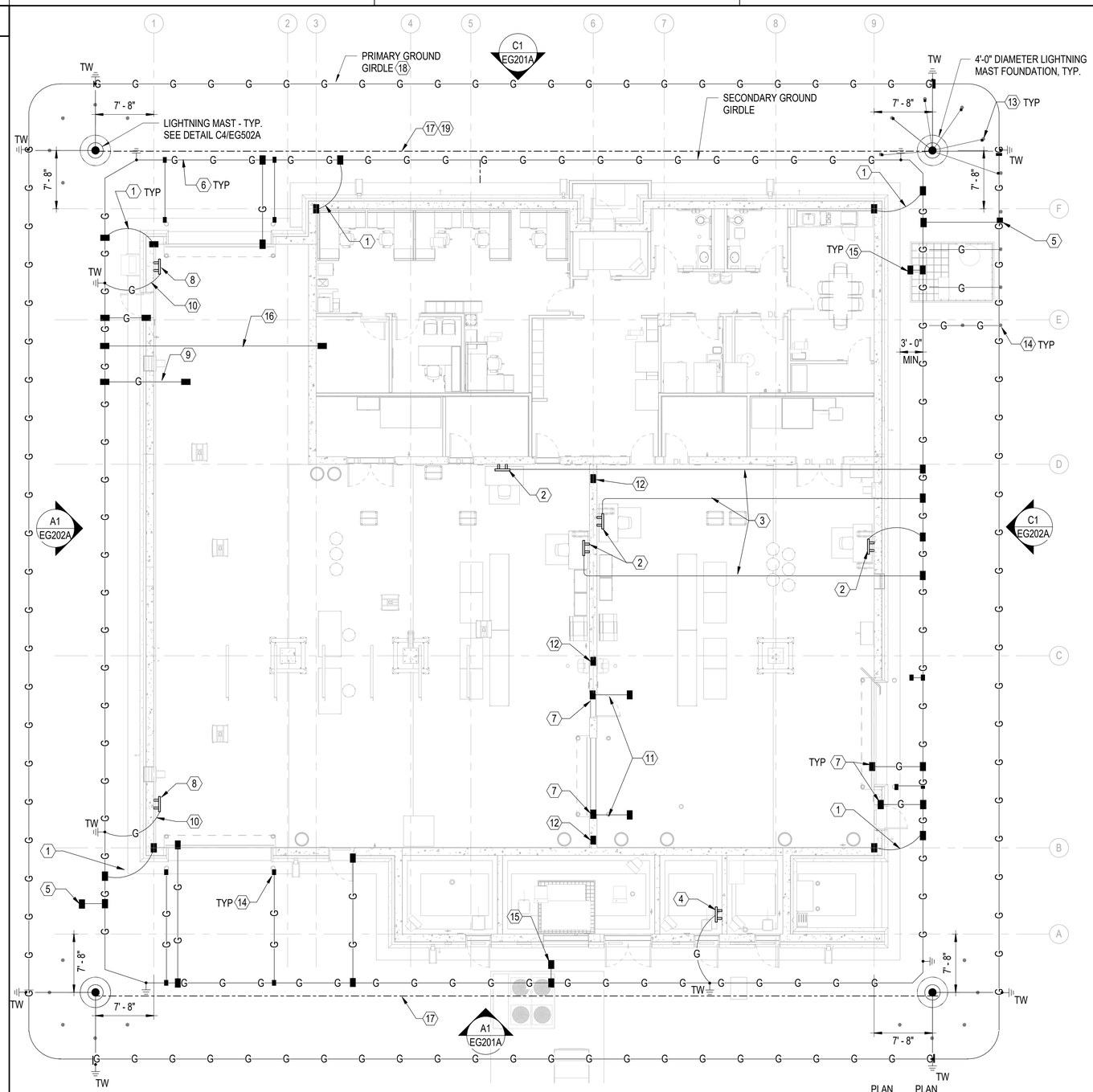

LIGHTNING PROTECTION AND GROUNDING PLAN

1/8" = 1'-0"

ELECTRICAL SHEET NOTES

T. ROOM(S) 105,106,113,114,115,116,117,118 AND 119 ARE DESIGNATED AS HAZARDOUS LOCATION, CLASS 2, DIV 1. GROUNDING AND BONDING MUST COMPLY WITH NFPA 70, ARTICLE 250 AND ARTICLE 502.30. PROVIDE CONNECTIONS MADE UP WRENCHTIGHT USING THREADED COUPLINGS, THREADED ENTRIES, OR LISTED THREADED HUBS ON ENCLOSURES.

ELECTRICAL KEYNOTES

#	
1	STRUCTURAL GROUNDS. BOND ALL REINFORCING STEEL IN BUILDING WITH #2/0 BARE COPPER CONDUCTORS TO EARTH ELECTRODE SYSTEM (SECONDARY GROUND RING). SEE DETAILS ON EG501A.
2	STATIC GROUND BAR, MOUNT +48" AFF. SEE DETAIL B2/EG501A.
3	PROVIDE MINIMUM #2/0 BARE COPPER GROUNDING CONDUCTOR FROM STATIC GROUND INSERT TO SECONDARY GROUND GIRDLE AS INDICATED. PERFORM TESTING PER NAVSEA OP5
4	SINGLE POINT GROUND BUS BAR (MAIN BUILDING GROUND BAR). SEE DETAIL BC2/EG501A.
5	PROVIDE SINGLE POINT CONNECTION BETWEEN PRIMARY AND SECONDARY GROUND GIRDLE.
6	THE GROUND RING RESISTANCE TO EARTH MUST BE MAINTAINED AT 25 OHM OR LESS. IF THIS REQUIREMENT IS NOT ACHIEVABLE, EVEN THROUGH ADDITIONAL GROUND RODS OR GRID CONDUCTOR LOOP, NOTIFY NOSSA/ GOVERNMENT FOR ADDITIONAL ACTIONS TAKEN TO DECREASE THE RESISTANCE TO EARTH AS LOW AS POSSIBLE
7	BOND TO DOOR METAL FRAME. MAKE CONNECTION ON INTERIIOR SIDE OF DOOR.
8	ORDNANCE GROUND. MOUNT 30" AFF. SEE DETAIL A4/EG501A.
9	BONDING CONNECTION FROM THE REINFORCING BARS IN THE WALL AND FOUNDATION TO THE REINFORCING BARS IN THE FLOOR SLAB. SEE B1/EG501A FOR DETAIL. PROVIDE CONNECTION EVERY 48" ON CENTER AROUND THE ENTIRE PERIMETER EXTERIOR WALL SYSTEM OF THE BUILDING.
10	PROVIDE MINIMUM #2/0 INSULATED COPPER GROUNDING CONDUCTOR IN 3/4" PVC BETWEEN ORDNANCE GROUND INSERT AND GROUND TEST WELL AS INDICATED. INSULATION MUST BE STRIPPED BARE FROM TERMINATION POINT UP TO THE POINT OF CONCEALMENT IN CONDUIT. PERFORM TESTING PER NAVSEA OP5. PROVIDE A 3"X9" BLACK PLASTIC BACKGROUND LABEL WITH 1" WHITE LETTERS INDICATING "ORDNANCE GROUND" AT EXPOSED LOCATIONS. SEE DETAIL A4/EG501A.
11	POSITIVELY BOND DOOR FRAME TO WIRE MESH CONNECTION IN FLOOR. SEE DETAIL B1/EG501A FOR TYPICAL BOND CONNECTION TO FLOOR.
12	BOND WALL STEEL TO FLOOR MAT AS SHOWN IN DETAIL B1/EG501A.
13	EXTERIOR BOLLARD. BOND BOLLARDS TO LIGHTNING MAST, TYPICAL. SEE DETAIL A4/EG502A.
14	BOND BOLLARD TO SECONDARY GROUND GIRDLE.
15	BOND MECHANICAL EQUIPMENT TO SECONDARY GROUND GIRDLE.
16	BOND DAS CONDUIT. SEE SHEET TT101A NOTE 4.
17	OVERHEAD GROUND WIRE. THE INSTALLATION MUST HAVE SELF-SUPPORTING CABLES WITH MINIMUM SAG UNDER ALL CONDITIONS. SEE DETAIL A3/EG502A.
18	PRIMARY GROUND GIRDLE (LIGHTNING PROTECTION GROUND LOOP) MUST BE LOCATED MINIMUM 3'-0" OUTSIDE OF THE SECONDARY GROUND GIRDLE. THE PRIMARY GROUND GIRDLE IS SHOWN ON THIS SHEET FOR CLARITY AND COORDINATION PURPOSES.
19	MINIMUM SEPARATION FOR OVERHEAD GROUND WIRE IS 6 FEET FROM THE PROTECTED STRUCTURE, INCLUDING ANY PROJECTIONS. THIS SEPARATION MUST BE INCREASED BY 1 FOOT FOR EVERY 10 FEET AFTER THE FIRST 50 FEET OF CATENARY WIRE RUN PARALLEL TO THE STRUCTURE.

GRAPHIC SCALE(S)

1/8" = 1' - 0" 0 5' 10' 15' 30'

SYM	DESCRIPTION	DATE	APPR

SEAL

A/E INFO

APPROVED

FOR COMMANDER NAVFAC

ACTIVITY: Approved by LCDR VINCE DEL GRECO, ROICC with PWD YORKTOWN, via Email.

SATISFACTORY TO DATE 03/26/2026

DES CPO DRW CPO CHK JDJ

PM/DM MME/WJW

BRANCH MANAGER WRB

CHIEF ENG/ARCH JWJ

FIRE PROTECTION HPN

DEPARTMENT OF THE NAVY
NAVAL FACILITIES ENGINEERING SYSTEMS COMMAND
MIDLANT DC CORE

NAVAL FACILITIES ENGINEERING SYSTEMS COMMAND - MID-ATLANTIC
NAVAL STATION - NORFOLK, VA

NAVAL WEAPONS STATION YORKTOWN, VIRGINIA
P171 WEAPON MAGAZINES SEGREGATION FACILITIES

LIGHTNING PROTECTION AND GROUNDING PLAN

SCALE: AS NOTED

EPROJECT NO.: 1737010

CONSTR. CONTR. NO.

NAVFAC DRAWING NO. 12942133

SHEET 455 OF 499

EG101A

DRAWFORM REVISION: 25 AUGUST 2020

4/6/2026 2:38:38 PM EG101A
C:\Revit Local Files\P171-1737010-E-R21-SEG_dayton.obrien.rvt

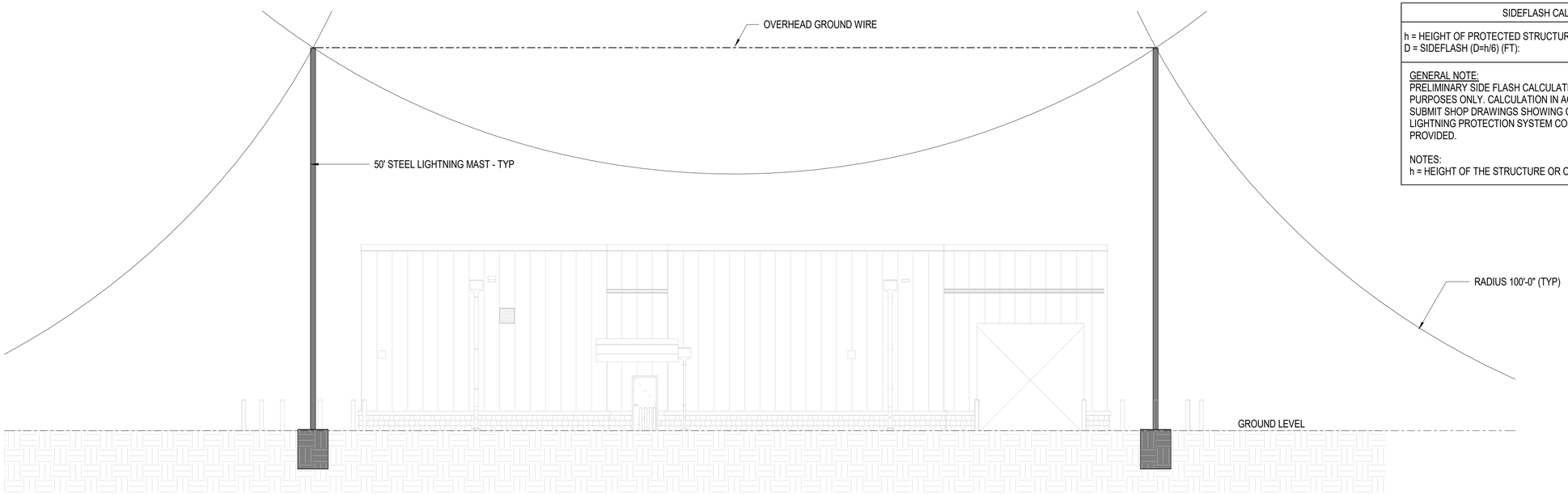

C1 ROLLING SPHERE ANALYSIS - NORTH ELEVATION

1/8" = 1'-0" (EG101A)

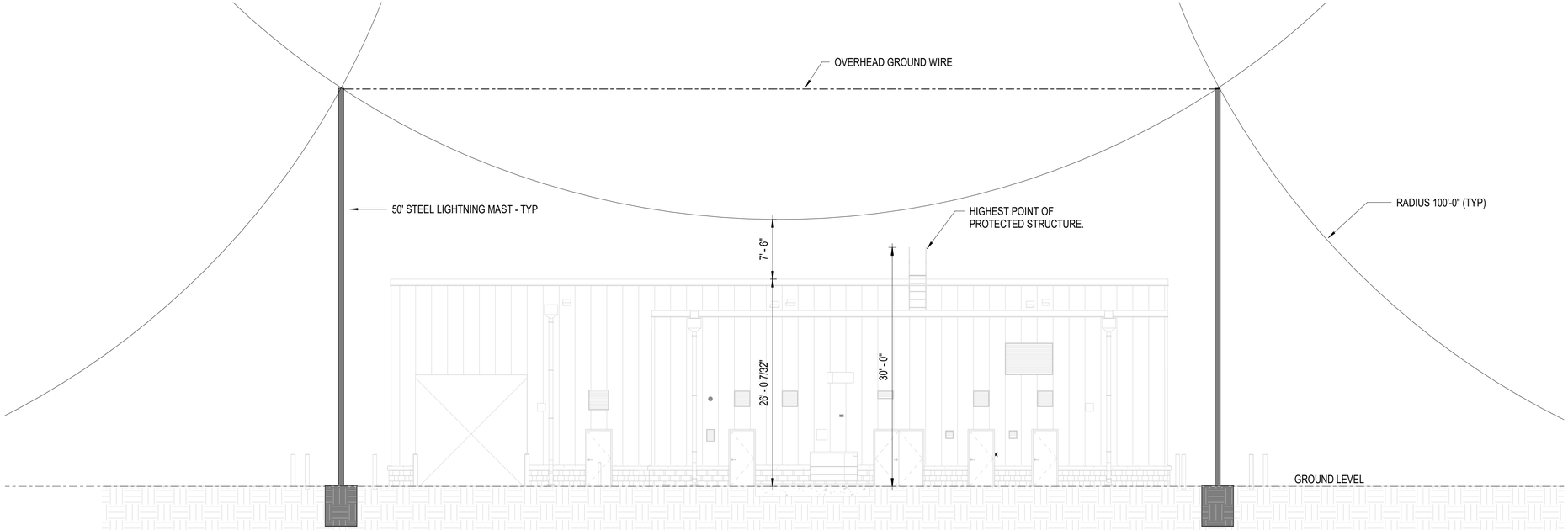

A1 ROLLING SPHERE ANALYSIS - SOUTH ELEVATION

1/8" = 1'-0" (EG101A)

SIDEFLASH CALCULATION	
h = HEIGHT OF PROTECTED STRUCTURE (FT):	30' - 0"
D = SIDEFLASH (D=h/6) (FT):	5'

GENERAL NOTE:
PRELIMINARY SIDE FLASH CALCULATION SHOWN FOR BIDDING PURPOSES ONLY. CALCULATION IN ACCORDANCE WITH NFPA 780. SUBMIT SHOP DRAWINGS SHOWING CALCULATIONS WHICH INCLUDE LIGHTNING PROTECTION SYSTEM COMPONENTS THAT WILL BE PROVIDED.

NOTES:
h = HEIGHT OF THE STRUCTURE OR OBJECT REQUIRING PROTECTION

ELECTRICAL SHEET NOTES

A. SEE ELECTRICAL SHEET NOTES ON EG101A.

GRAPHIC SCALE(S)

1/8" = 1' - 0" 0 5' 10' 15' 30'

SYM	DESCRIPTION	DATE	APPR

SEAL

A/E INFO

APPROVED

FOR COMMANDER NAVFAC

ACTIVITY: Approved by LCDR VINCE DEL GRECO, ROICC with PWD YORKTOWN, via Email.

SATISFACTORY TO DATE 03/26/2026

DES CPO DRW CPO CHK JDU

PM/DM MME/WJW

BRANCH MANAGER WRB

CHIEF ENG/ARCH JWJ

FIRE PROTECTION HPN

DEPARTMENT OF THE NAVY
NAVAL FACILITIES ENGINEERING SYSTEMS COMMAND
MIDLANT DC CORE
NAVAL FACILITIES ENGINEERING SYSTEMS COMMAND - MID-ATLANTIC
NAVAL STATION - NORFOLK, VA
NAVAL WEAPONS STATION YORKTOWN, VIRGINIA
P171 WEAPON MAGAZINES
SEGREGATION FACILITIES
ELECTRICAL LIGHTNING ZONE OF PROTECTION ELEVATIONS

SCALE: AS NOTED

EPROJECT NO.: 1737010

CONSTR. CONTR. NO.

NAVFAC DRAWING NO. 12942134

SHEET 456 OF 499

EG201A

DRAWFORM REVISION: 25 AUGUST 2020

4/1/2026 2:24:38 PM EG201A
C:\Revit Local Files\P171-1737010-E-R21-SEG_clayton.obrien.rvt

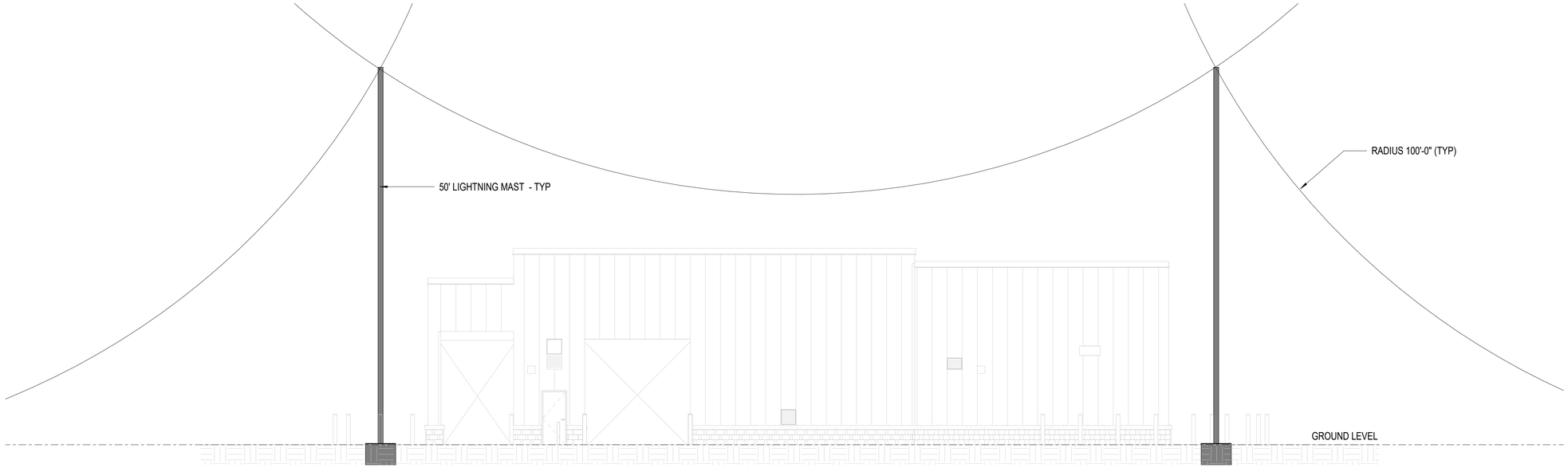

C1 ROLLING SPHERE ANALYSIS - EAST ELEVATION

1/8" = 1'-0" (EG101A)

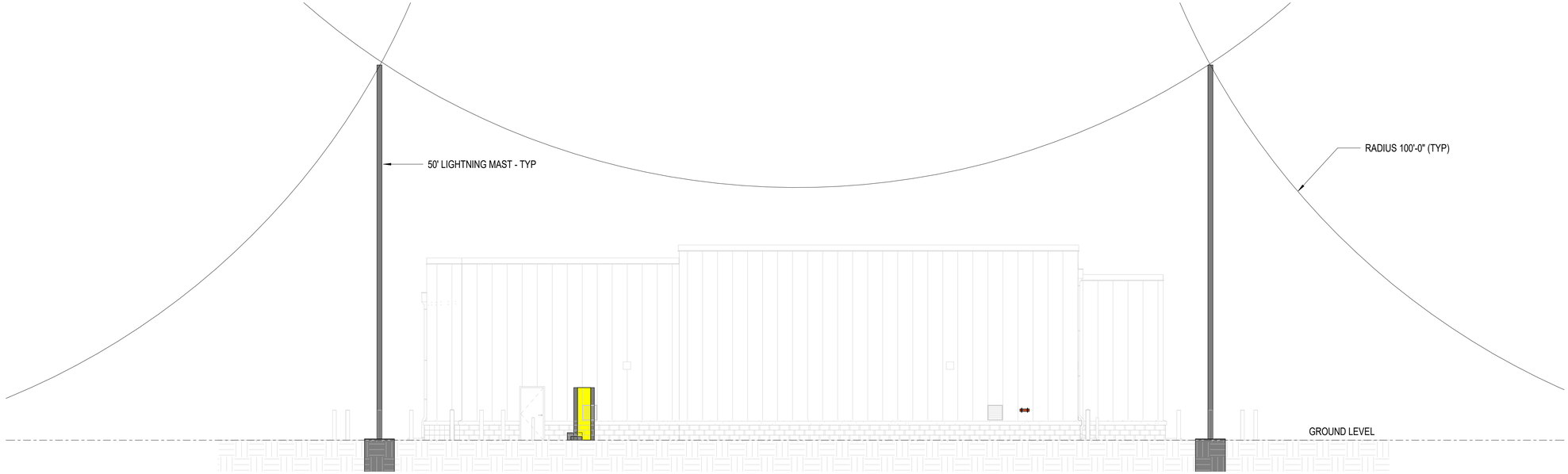

A1 ROLLING SPHERE ANALYSIS - WEST ELEVATION

1/8" = 1'-0" (EG101A)

ELECTRICAL SHEET NOTES

A. SEE ELECTRICAL SHEET NOTES ON EG101A.

GRAPHIC SCALE(S)

1/8" = 1' - 0" 0 5' 10' 15' 30'

SYM	DESCRIPTION	DATE	APPR

NAVFAC

SEAL

A/E INFO

APPROVED

FOR COMMANDER NAVFAC

ACTIVITY: Approved by LCDR VINCE DEL GRECO, ROICC with PWD YORKTOWN, via Email.

SATISFACTORY TO DATE 03/26/2026

DES CPO | DRW CPO | CHK JDU

PM/DM MME/WJW

BRANCH MANAGER WRB

CHIEF ENG/ARCH JWJ

FIRE PROTECTION HPN

DEPARTMENT OF THE NAVY
NAVAL FACILITIES ENGINEERING SYSTEMS COMMAND
MIDLANT DC CORE

NAVAL FACILITIES ENGINEERING SYSTEMS COMMAND - MID-ATLANTIC
NAVAL STATION - NORFOLK, VA

NAVAL WEAPONS STATION
YORKTOWN, VIRGINIA

P171 WEAPON MAGAZINES
SEGREGATION FACILITIES

ELECTRICAL LIGHTNING ZONE OF PROTECTION ELEVATIONS

SCALE: AS NOTED

EPROJECT NO.: 1737010

CONSTR. CONTR. NO.

NAVFAC DRAWING NO. 12942135

SHEET 457 OF 499

EG202A

DRAWFORM REVISION: 25 AUGUST 2020

4/1/2026 2:24:40 PM EG202A
C:\Revit Local Files\P171-1737010-E-R21-SEG_clayton.obrien.rvt

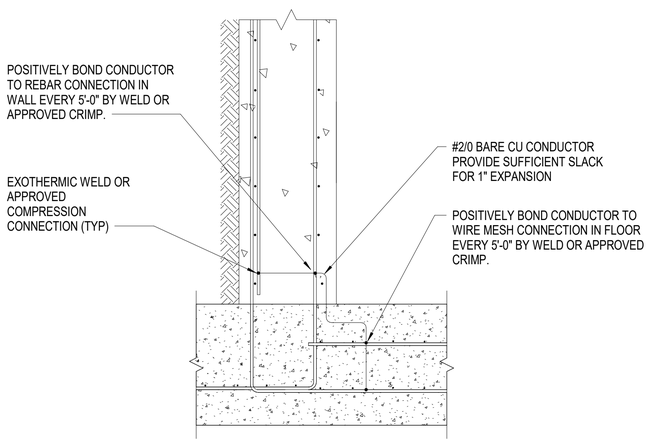

B1 FLOOR TO WALL CONNECTION DETAIL - TYPICAL

NOT TO SCALE

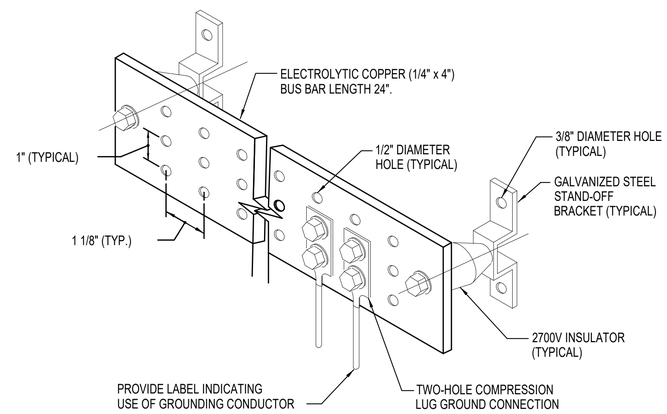

B2 SINGLE POINT GROUNDING BUS BAR DETAIL

NOT TO SCALE

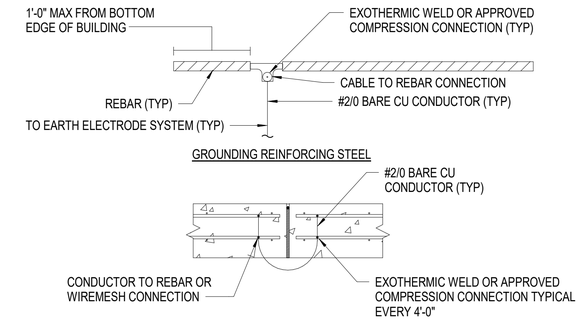

C4 STRUCTURAL GROUNDING DETAILS

NOT TO SCALE

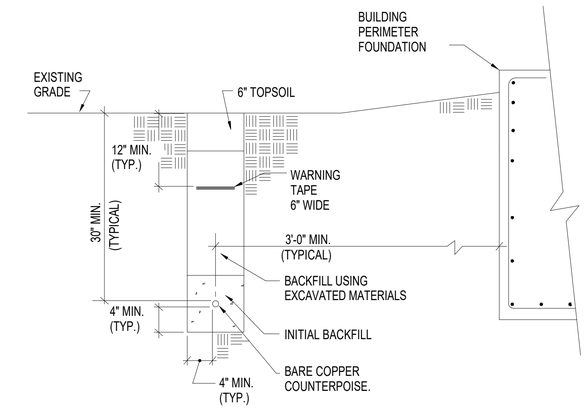

B4 GROUND RING INSTALLATION DETAIL

NOT TO SCALE

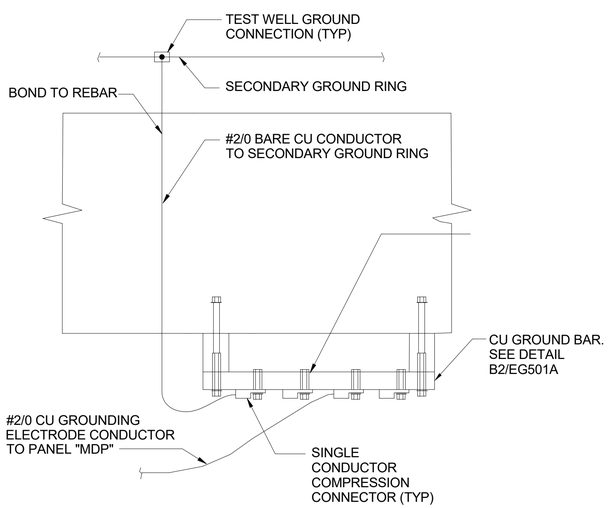

A1 SINGLE POINT GROUNDING BAR DETAIL

NOT TO SCALE

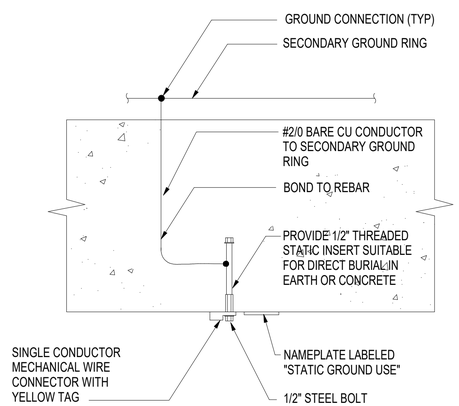

STATIC GROUND INSERT DETAIL NOTES:

1. PROVIDE A REMOVABLE YELLOW MELAMINE PLASTIC TAG THAT ATTACHES TO THE STATIC GROUND INSERT. THE TAG SHALL INCLUDE THE FOLLOWING INFORMATION:

"NOT IN SERVICE. NO MAINTENANCE REQUIRED.

INSTALLATION MEETS STATIC/FACILITY GROUND REQUIREMENT PER NAVSEA OP-5. ACTIVITY SHALL PERFORM TESTING PER NAVSEA OP-5 AND ENACT MAINTENANCE SCHEDULE WHEN THE STATIC/FACILITY GROUND INSERT IS PLACED IN SERVICE.

RETAIN THIS TAG TO REATTACH WHEN REMOVED FROM SERVICE."

2. MOUNT GROUND INSERT AT 48" AFF, UON.

A2 STATIC GROUND INSERT DETAIL

NOT TO SCALE

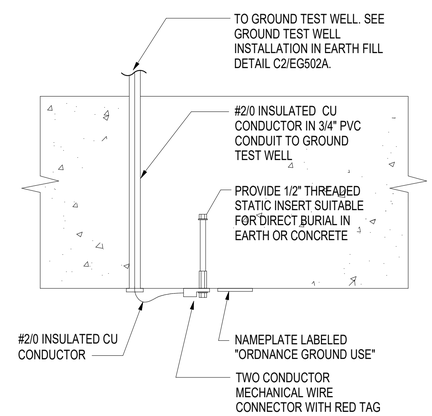

ORDNANCE GROUND INSERT DETAIL NOTES:

1. PROVIDE A REMOVABLE RED MELAMINE PLASTIC TAG THAT ATTACHES TO THE ORDNANCE GROUND INSERT. THE TAG SHALL INCLUDE THE FOLLOWING INFORMATION:

"NOT IN SERVICE. NO MAINTENANCE REQUIRED.

INSTALLATION MEETS ORDNANCE GROUND REQUIREMENT PER NAVSEA OP-5. ACTIVITY SHALL PERFORM TESTING PER NAVSEA OP-5 AND ENACT MAINTENANCE SCHEDULE WHEN THE ORDNANCE GROUND INSERT IS PLACED IN SERVICE.

RETAIN THIS TAG TO REATTACH WHEN REMOVED FROM SERVICE."

2. MAINTAIN THREADED INSERT ISOLATION. DO NOT ALLOW THE THREADED INSERT TO TOUCH REBAR OR OTHER METALLIC OBJECTS IN THE WALL.

3. MOUNT GROUND INSERT AT 36" AFF.

A4 ORDNANCE GROUND INSERT DETAIL

NOT TO SCALE

SYM	DESCRIPTION	DATE	APPR

NAVFAC

SEAL

A/E INFO

APPROVED

FOR COMMANDER NAVFAC

ACTIVITY: Approved by LCDR VINCE DEL GRECO, ROICC with PWD YORKTOWN, via Email.

SATISFACTORY TO DATE 03/26/2026

DES CPO | DRW CPO | CHK JDJ

PM/DM MME/WJW

BRANCH MANAGER WRB

CHIEF ENG/ARCH JWJ

FIRE PROTECTION HPN

DEPARTMENT OF THE NAVY
NAVAL FACILITIES ENGINEERING SYSTEMS COMMAND
MIDLANT DC CORE

NAVAL FACILITIES ENGINEERING SYSTEMS COMMAND - MID-ATLANTIC
NAVAL STATION - NORFOLK, VA

NAVAL WEAPONS STATION YORKTOWN, VIRGINIA

P171 WEAPON MAGAZINES SEGREGATION FACILITIES

GROUNDING DETAILS

SCALE: AS NOTED

EPROJECT NO.: 1737010

CONSTR. CONTR. NO.

NAVFAC DRAWING NO. 12942136

SHEET 458 OF 499

EG501A

DRAWFORM REVISION: 25 AUGUST 2020

4/1/2026 2:24:40 PM EG501A
C:\Revit Local Files\P171-1737010-E-R21-SEG_clayton.obrien.rvt

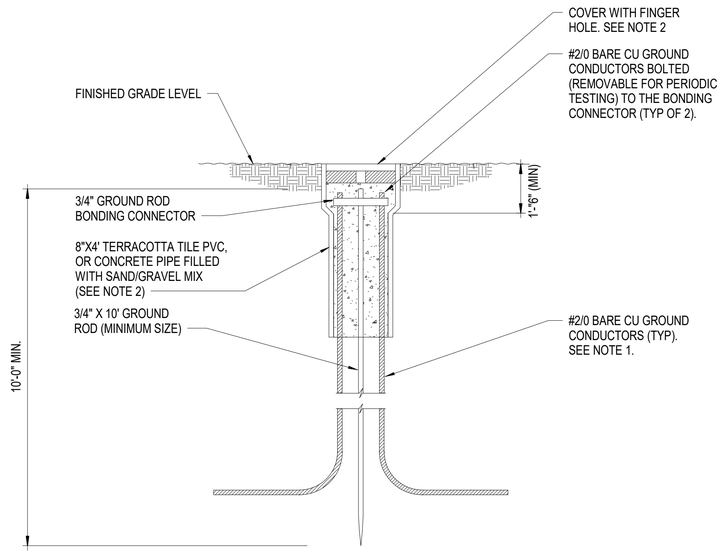

NOTES:

1. MAINTAIN THE GROUND CONDUCTORS ISOLATED FROM THE GROUND ROD UNTIL THE BOND CONNECTION AT THE TOP.
2. PROVIDE "TRAFFIC RATED" TEST WELL AND COVER FRO PAVED AREAS.

C2 GROUND TEST WELL INSTALLATION IN EARTH FILL

NOT TO SCALE

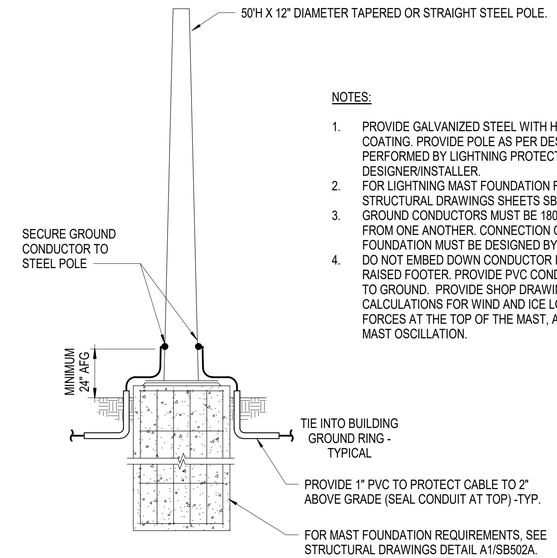

NOTES:

1. PROVIDE GALVANIZED STEEL WITH HIGH PERFORMANCE COATING. PROVIDE POLE AS PER DESIGN CALCULATION PERFORMED BY LIGHTNING PROTECTION SYSTEM DESIGNER/INSTALLER.
2. FOR LIGHTNING MAST FOUNDATION REQUIREMENTS SEE STRUCTURAL DRAWINGS SHEETS SB101A AND SB502A.
3. GROUND CONDUCTORS MUST BE 180 DEGREES OPPOSITE FROM ONE ANOTHER. CONNECTION OF MAST BASE TO FOUNDATION MUST BE DESIGNED BY THE MAST DESIGNER.
4. DO NOT EMBED DOWN CONDUCTOR IN CONCRETE MAST RAISED FOOTER. PROVIDE PVC CONDUIT FOR CLEAR PATH TO GROUND. PROVIDE SHOP DRAWINGS WITH CALCULATIONS FOR WIND AND ICE LOADING, DIRECTIONAL FORCES AT THE TOP OF THE MAST, AND DAMPENING FOR MAST OSCILLATION.

C4 LIGHTNING MAST DETAIL

NOT TO SCALE

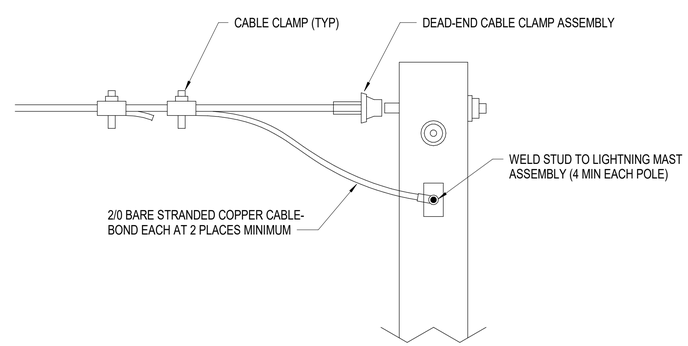

A3 POLE TOP DETAIL

NOT TO SCALE

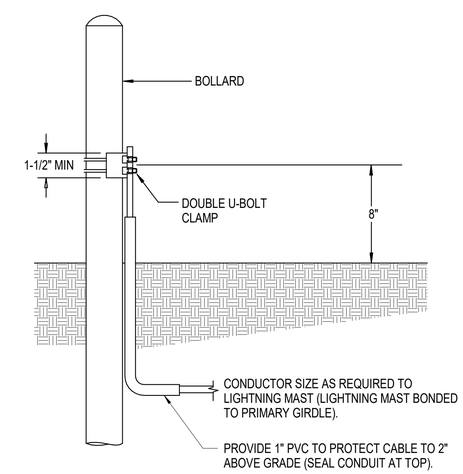

A4 TYPICAL BOLLARD GROUNDING DETAIL

NOT TO SCALE

SYM	DESCRIPTION	DATE	APPR

SEAL

A/E INFO

APPROVED

FOR COMMANDER NAVFAC

ACTIVITY: Approved by LCDR VINCE DEL GRECO, ROICC with PWD YORKTOWN, via Email.

SATISFACTORY TO DATE 03/26/2026

DES CPO | DRW CPO | CHK JDJ

PM/DM MME/WJW

BRANCH MANAGER WRB

CHIEF ENG/ARCH JWJ

FIRE PROTECTION HPN

DEPARTMENT OF THE NAVY
NAVAL FACILITIES ENGINEERING SYSTEMS COMMAND
MIDLANT DC CORE

NAVAL FACILITIES ENGINEERING SYSTEMS COMMAND - MID-ATLANTIC
NAVAL STATION - NORFOLK, VA

NAVAL WEAPONS STATION YORKTOWN, VIRGINIA

P171 WEAPON MAGAZINES SEGREGATION FACILITIES

GROUNDING DETAILS

SCALE: AS NOTED

EPROJECT NO.: 1737010

CONSTR. CONTR. NO.

NAVFAC DRAWING NO. 12942137

SHEET 459 OF 499

EG502A

DRAWFORM REVISION: 25 AUGUST 2020

4/1/2026 2:24:40 PM EG502A
C:\Revit Local Files\P171-1737010-E-R21-SEG_clayton.obrien.rvt

ELECTRICAL SHEET NOTES

A. INSPECT CONCRETE REINFORCING STEEL BONDING CONNECTIONS FOR POSITIVE CONTACT BETWEEN INDIVIDUAL BARS.

B. INSPECT BONDING CONNECTIONS BETWEEN STRUCTURAL ELEMENTS AT EACH LOCATION AND CONTINUITY TESTING OF A RANDOM SAMPLE, 10% MINIMUM, OF THE CONNECTIONS.

C. TEST CONTINUITY AT BONDING CONNECTIONS TO THE GROUND RING ELECTRODE INCLUDING THE FOLLOWINGS:

a. EACH END OF THE FLOOR SLAB CONNECTION.
b. EACH GROUND ROD LOCATION AND TEST WELL.
c. EACH LIGHTNING PROTECTION DOWN SYSTEM DOWN CONDUCTOR.
d. THE ELECTRICAL PANEL SERVICE ENTRANCE GROUNDING ELECTRODE CONDUCTOR.
e. ORDINANCE AND STATIC GROUND INSERTS AND GROUND BARS.
f. SINGLE POINT GROUND BAR.
g. GROUND CROSS CONNECTION CABLES.

D. UNDERGROUND RGS CONDUIT CONTAINING POWER AND METALLIC COMMUNICATIONS LINES MUST BE BONDED TO THE SECONDARY GROUND GIRDLE WHERE THEY CROSS. THE RGS CONDUIT MUST CROSS THE GROUNDING GIRDLE AT RIGHT ANGLES, WHERE POSSIBLE.

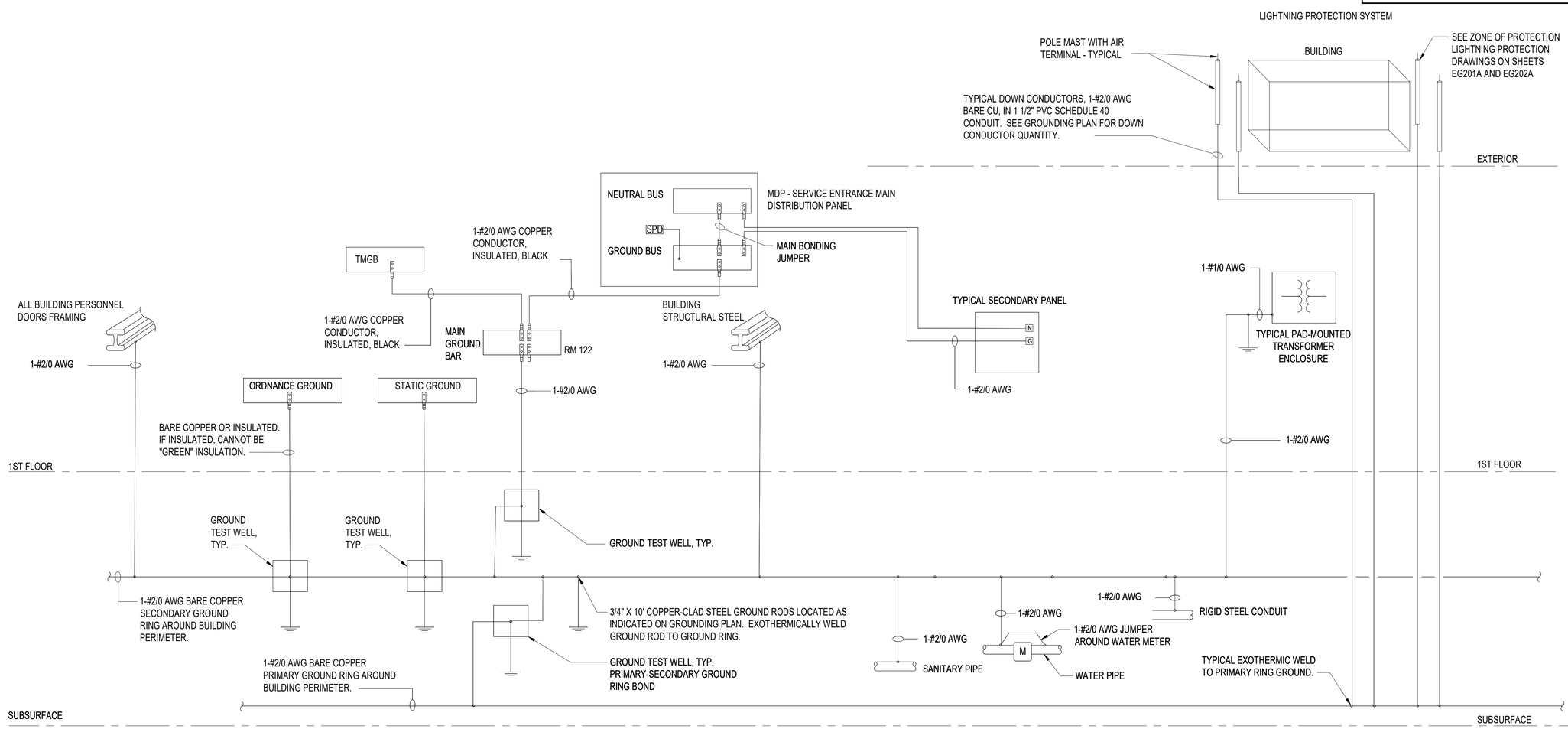

A1 TYPICAL GROUNDING RISER DIAGRAM

NOT TO SCALE

SYM	DESCRIPTION	DATE	APPR

SEAL

A/E INFO

APPROVED

FOR COMMANDER NAVFAC

ACTIVITY: Approved by LCDR VINCE DEL GRECO, ROICC with PWD YORKTOWN, via Email.

SATISFACTORY TO DATE 03/26/2026

DES CPO | DRW CPO | CHK JDU

PM/DM MME/WJW

BRANCH MANAGER WRB

CHIEF ENG/ARCH JWJ

FIRE PROTECTION HPN

DEPARTMENT OF THE NAVY
NAVAL FACILITIES ENGINEERING SYSTEMS COMMAND
MIDLANT DC CORE

NAVAL FACILITIES ENGINEERING SYSTEMS COMMAND - MID-ATLANTIC
NAVAL STATION - NORFOLK, VA

NAVAL WEAPONS STATION YORKTOWN, VIRGINIA
P171 WEAPON MAGAZINES SEGREGATION FACILITIES
GROUNDING RISER DIAGRAM

SCALE: AS NOTED

EPROJECT NO.: 1737010

CONSTR. CONTR. NO.

NAVFAC DRAWING NO. 12942138

SHEET 460 OF 499

EG601A

DRAWFORM REVISION: 25 AUGUST 2020

4/1/2026 2:24:40 PM EG601A
C:\Revit Local Files\P171-1737010-E-R21-SEG_clayton.obrien.rvt

TELECOMMUNICATIONS LEGEND

GENERAL

- DEMOLITION AND NEW WORK NOTE - REFER TO "DEMOLITION NOTES" AND "NEW WORK NOTES" FOR EACH SHEET
- SPECIALTY NOTE - REFER TO "SPECIALTY NOTES" FOR EACH SHEET
- #. GENERAL NOTE - REFER TO "GENERAL NOTES" FOR EACH SHEET
- OBJECTS ON DRAWINGS AT THIS LINETYPE ARE CATEGORIZED AS NEW OR PROPOSED FOR CONSTRUCTION, UON.
- OBJECTS ON DRAWINGS AT THIS LINETYPE ARE CATEGORIZED AS EXISTING TO BE REMOVED-DEMOLISHED, UON.
- OBJECTS ON DRAWINGS AT THIS LINETYPE ARE CATEGORIZED AS EXISTING TO REMAIN, UON.
- NEW TO EXISTING CONNECTION
- REMOVE TO THIS POINT

TELEPHONE/DATA

- TELEPHONE OUTLET. MOUNT 18" AFF. UON.
- DATA OUTLET. MOUNT 18" AFF. UON.
- COMBINATION VOICE/DATA OUTLET. MOUNT 18" AFF. UON.
- VOICE/DATA OUTLET. FLUSH FLOOR MOUNT.
- TELEPHONE TERMINAL BACKBOARD. 8' (L) X 4' (W) X 3/4" (H) PLYWOOD BACKBOARD, PLYWOOD BACKBOARD MUST BE FIRE-RATED OR COVERED IN 2 COATS OF FIRE-RETARDANT PAINT.
- TYPE "F" CONNECTOR FOR CABLE TELEVISION. SYSTEM MOUNTED IN SINGLE GANG BOX WITH FACEPLATE.
- TMGB TELECOMMUNICATIONS MAIN GROUNDING BUSBAR

CONDUIT, AND RACEWAY

- CONDUIT TURNED UP
- CONDUIT TURNED DOWN
- LADDER RACK CABLE TRAY, SIZE AND TYPE AS INDICATED.
- CHANNEL TYEP CABLE TRAY, SIZE AND TYPE AS INDICATED.

SECURITY

- KP ARMED/DISARMED CARD READER WITH KEYPAD
- BMS BALANCE MAGNETIC SWITCH
- MS VOLUMETRIC MOTION SENSOR. MOTION SENSOR BOXES MUST BE 3" MINIMUM FROM ALL DUCTS AND LIGHT FIXTURES. (⊣) WHEN USED DENOTES WALL MOUNTED AT 10' AFF.

ABBREVIATIONS

AFF	ABOVE FINISHED FLOOR
BFG	BELOW FINISHED GRADE
C	CONDUIT
DAS	DISTRIBUTED ANTENNA SYSTEM
EA	EACH
EXIST	EXISTING
GFCI	GOVERNMENT FURNISHED, CONTRACTOR INSTALLED
GFGI	GOVERNMENT FURNISHED, GOVERNMENT INSTALLED
QU	QUANTITY
REQ'D	REQUIRED
RM	ROOM
SHT	SHEET
T	TELEPHONE
TTB	TELEPHONE TERMINAL BOARD
TYP	TYPICAL
UON	UNLESS OTHERWISE NOTED

GENERAL NOTES

1. SEE GENERAL NOTES ON E-001A.
2. SECURITY DEVICES IS GOVERNMENT FURNISHED, GOVERNMENT INSTALLED. PROVIDE EMPTY BOXES AND CONDUIT ONLY. PROVIDE BACK BOXES AS REQUIRED FOR EACH DEVICE.

SYM	DESCRIPTION	DATE	APPR

SEAL

A/E INFO

APPROVED

FOR COMMANDER NAVFAC

ACTIVITY
Approved by LCDR VINCE DEL GRECO, ROICC with PWD YORKTOWN, via Email.

SATISFACTORY TO DATE 03/26/2026

DES CPO | DRW CPO | CHK JDJ

PM/DM MME/WJW

BRANCH MANAGER WRB

CHIEF ENG/ARCH JWJ

FIRE PROTECTION HPN

DEPARTMENT OF THE NAVY
NAVAL FACILITIES ENGINEERING SYSTEMS COMMAND
MIDLANT DC CORE
NAVAL FACILITIES ENGINEERING SYSTEMS COMMAND - MID-ATLANTIC
NAVAL STATION - NORFOLK, VA
NAVAL WEAPONS STATION
YORKTOWN, VIRGINIA
P171 WEAPON MAGAZINES
SEGREGATION FACILITIES
TELECOMMUNICATIONS SYMBOLS, LEGEND, ABBREVIATIONS, AND NOTES

SCALE: AS NOTED

EPROJECT NO.: 1737010

CONSTR. CONTR. NO.

NAVFAC DRAWING NO.
12942141

SHEET 461 OF 499

T-001A

DRAWFORM REVISION: 25 AUGUST 2020

4/1/2026 2:24:52 PM T-001A
C:\Revit Local Files\P171-1737010-E-R21-SEG_clayton.obrien.rvt

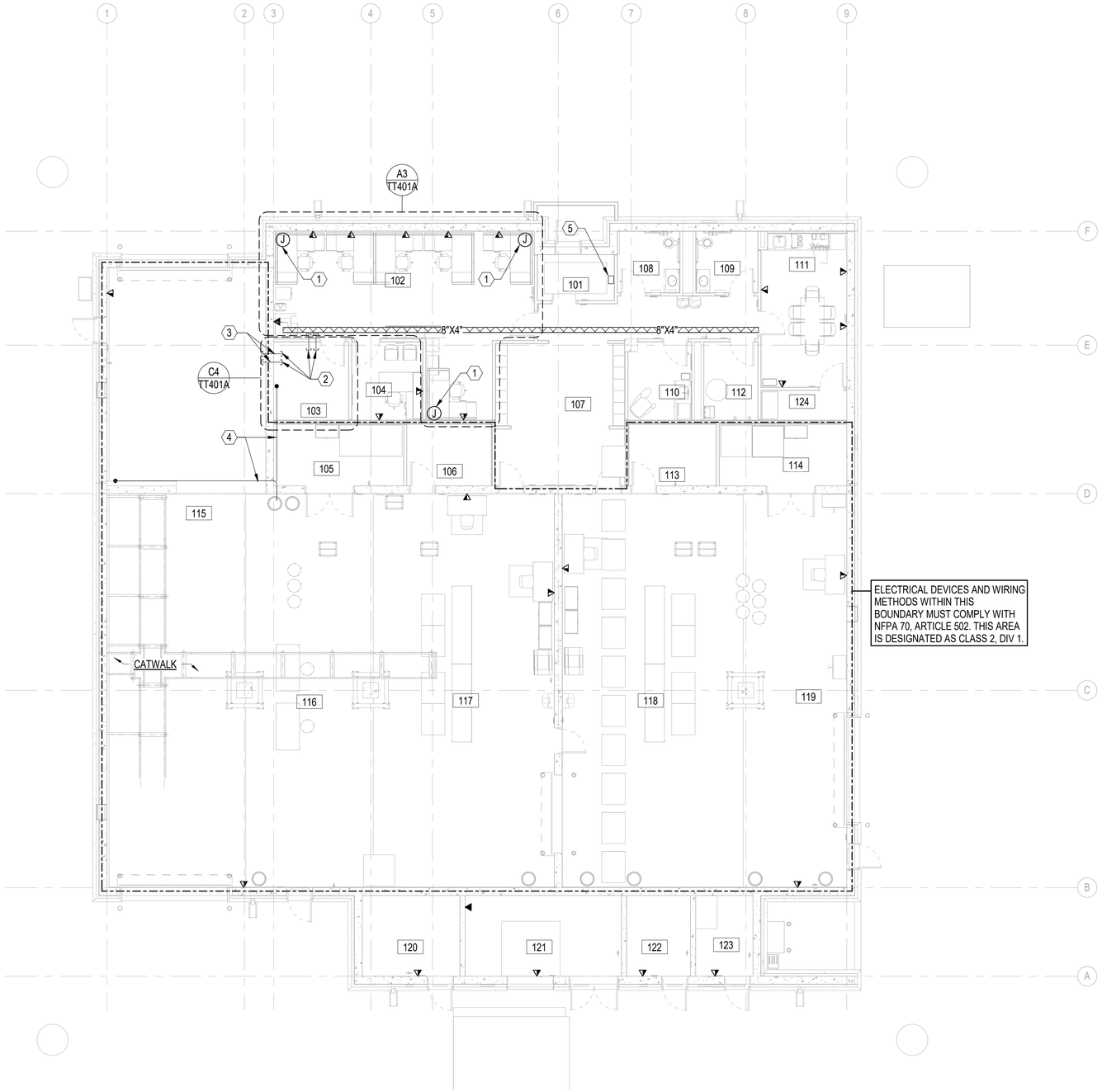

FLOOR PLAN - TELECOMMUNICATIONS AND SECURITY

1/8" = 1'-0"

PLAN NORTH — BLDG 1

PLAN NORTH — BLDG 2

ELECTRICAL SHEET NOTES

A. COORDINATE WITH INTERIOR FURNITURE PLANS IF101A AND IF102A PRIOR TO ROUGH-IN FOR EQUIPMENT. SMALL ARMS AND BOMBS SEGREGATION BUILDINGS ARE IDENTICAL BESIDE EQUIPMENT LAYOUT IN ROOM 102. SEE A3/TT401A FOR ADDITIONAL INFORMATION.

B. ROOM(S) 105,106,113,114,115,116,117,118 AND 119 ARE DESIGNATED AS HAZARDOUS LOCATION, CLASS 2, DIV 1 AND MUST COMPLY WITH NFPA 70, ARTICLE 502.

C. REFER TO SPECIFICATION 01 11 00 PERTAINING TO FIRST RESPONDER DISTRIBUTED ANTENNAE SYSTEM (DAS).

TELECOM KEYNOTES

1 SYSTEMS FURNITURE CONNECTION FOR TELECOMMUNICATIONS. FLUSH MOUNT 12" AFF.

2 4" CONDUIT SLEEVE. PROVIDE MESH INNERDUCT WITH PULLSTRING.

3 PROVIDE FIRESTOPPING AT FIREWALL PENETRATION. SEE DETAIL B1/TT601A.

4 PROVIDE 2" CONDUIT FOR ROOF MOUNTED DAS ANTENNA. CONDUIT MUST RUN TO THE BUILDING ENVELOPE PENETRATION OF THE EXTERIOR WALL AT 22'-6" AFF. SEE DETAIL A3/AE401A. ROOF PENETRATIONS IS NOT PERMITTED. COORDINATE FINAL ANTENNA LOCATION AND MAS HEIGHT WITH DAS DESIGNER PRIOR TO ROUGH-IN OF THE EXTERIOR CONDUIT FROM THE ENVELOPE PENETRATION TO ANTENNA LOCATION. PROVIDE STAINLESS STEEL HARDWARE AND SUPPORTS FOR EXTERIOR CONDUIT.

5 DAS ANNUNCIATOR. COORDINATE LOCATION WITH FACP.

ROOM SCHEDULE

ROOM NUMBER	ROOM NAME
101	VESTIBULE
102	OPEN OFFICE
103	SERVER
104	SHOP LEAD
105	GENERAL STORAGE
106	SECURE TOOL ROOM A
107	CORRIDOR
108	TOILET
109	TOILET
110	MOTHERS ROOM
111	PLANNING ROOM
112	CUSTODIAN
113	SECURE TOOL ROOM B
114	GENERAL STORAGE
115	CONTAINER TRANSFER BAY A
116	SEGREGATION CELL A
117	OPEN SEGREGATION AREA A
118	OPEN SEGREGATION AREA B
119	SEGREGATION CELL B
120	SPRINKLER ROOM
121	MECHANICAL ROOM
122	ELECTRICAL ROOM
123	AIR
124	STOR.

GRAPHIC SCALE(S)

1/8" = 1' - 0" 0 5' 10' 15' 30'

SYM	DESCRIPTION	DATE	APPR

SEAL

A/E INFO

APPROVED

FOR COMMANDER NAVFAC

ACTIVITY
Approved by LCDR VINCE DEL GRECO, ROICC with PWD YORKTOWN, via Email.

SATISFACTORY TO DATE 03/26/2026

DES CPO DRW CPO CHK JDU

PM/DM MME/WJW

BRANCH MANAGER WRB

CHIEF ENG/ARCH JWJ

FIRE PROTECTION HPN

DEPARTMENT OF THE NAVY
NAVAL FACILITIES ENGINEERING SYSTEMS COMMAND
MIDLANT DC CORE

NAVAL FACILITIES ENGINEERING SYSTEMS COMMAND - MID-ATLANTIC
NAVAL STATION - NORFOLK, VA

NAVAL WEAPONS STATION
YORKTOWN, VIRGINIA
P171 WEAPON MAGAZINES
SEGREGATION FACILITIES

FLOOR PLAN - TELECOMMUNICATIONS

SCALE: AS NOTED

EPROJECT NO.: 1737010

CONSTR. CONTR. NO.

NAVFAC DRAWING NO.
12942142

SHEET 462 OF 499

TT101A

DRAWFORM REVISION: 25 AUGUST 2020

4/1/2026 2:24:54 PM TT101A
C:\Revit Local Files\P171-1737010-E-R21-SEG_clayton.obrien.rvt

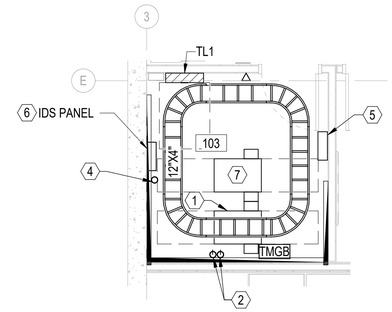

C4 ENLARGED PLAN - SERVER RM 103

1/4" = 1'-0" (TT101A)

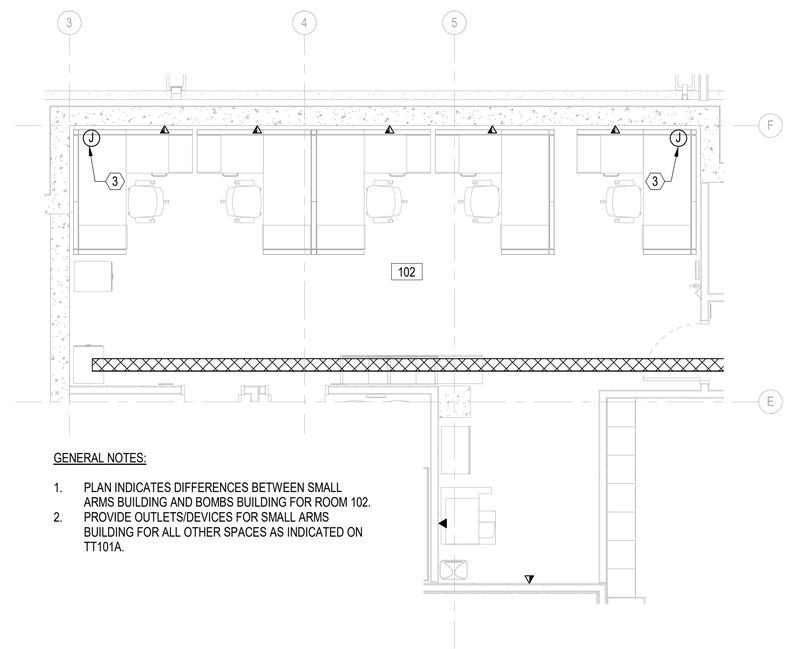

GENERAL NOTES:

1. PLAN INDICATES DIFFERENCES BETWEEN SMALL ARMS BUILDING AND BOMBS BUILDING FOR ROOM 102.
2. PROVIDE OUTLETS/DEVICES FOR SMALL ARMS BUILDING FOR ALL OTHER SPACES AS INDICATED ON TT101A.

A3 ENLARGED PLAN - RM 102 - SMALL ARMS BUILDING

1/4" = 1'-0" (TT101A)

ELECTRICAL KEYNOTES

1 NMCI CABINET. SEE DETAIL A4/TT601A.

2 (2) 4" INCOMING TELECOMMUNICATIONS CONDUIT. SEE SHEET ES107 FOR CONTINUATION.

3 SYSTEMS FURNITURE CONNECTION FOR TELECOMMUNICATIONS. FLUSH MOUNT 12" AFF.

4 PROVIDE 2" RGS CONDUIT TO ROOF LEVEL FOR DAS ANENNA CABLING. SEE SHEET TT101A FOR ADDITIONAL INFORMATION.

5 DEDICATED SPACE FOR DAS EQUIPMENT.

6 COORDINATE LOCATION FOR IDS/ESS EQUIPMENT IN FIELD. SEE ESS CONNECTION DIAGRAM C4/TY501A.

7 ESS CABINET.

GRAPHIC SCALE(S)

1/4" = 1' - 0" 0 1' 5' 10' 15'

SYM	DESCRIPTION	DATE	APPR

NAVFAC

SEAL

A/E INFO

APPROVED

FOR COMMANDER NAVFAC

ACTIVITY
Approved by LCDR VINCE DEL GRECO, RO/CC with PWD YORKTOWN, via Email.

SATISFACTORY TO DATE 03/26/2026

DES CPO DRW CPO CHK JDU

PM/DM MME/WJW

BRANCH MANAGER WRB

CHIEF ENG/ARCH JWJ

FIRE PROTECTION HPN

DEPARTMENT OF THE NAVY
NAVAL FACILITIES ENGINEERING SYSTEMS COMMAND
MIDLANT DC CORE

NAVAL FACILITIES ENGINEERING SYSTEMS COMMAND - MID-ATLANTIC
NAVAL STATION - NORFOLK, VA

NAVAL WEAPONS STATION YORKTOWN, VIRGINIA

P171 WEAPON MAGAZINES SEGREGATION FACILITIES

ENLARGED PLANS

SCALE: AS NOTED

EPROJECT NO.: 1737010

CONSTR. CONTR. NO.

NAVFAC DRAWING NO. 12942143

SHEET 463 OF 499

TT401A

DRAWFORM REVISION: 25 AUGUST 2020

4/1/2026 2:24:54 PM TT401A
C:\Revit Local Files\P171-1737010-E-R21-SEG_clayton.obrien.rvt

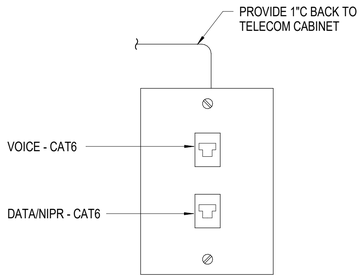

C1 TYPICAL DATA/VOICE OUTLET

NOT TO SCALE

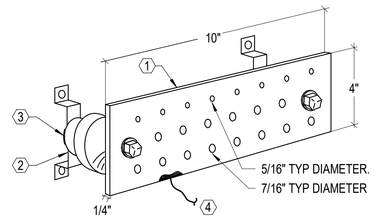

TMGB & TGB

1. TELECOM ROOM COPPER GROUND BAR, 1/4" X 4" X 10", PER J-STD-607-A.
2. STANDOFF BRACKET ASSEMBLY WITH INSULATORS, TYP FOR 2.
3. LOCK WASHER, TYP FOR 2.
4. A CONTINUOUS #3/0 GREEN INSULATED CONDUCTOR SHALL BE RUN FROM MAIN SYSTEM GROUND BAR TO MAIN TELECOM ROOM GROUND BAR (TMGB).

C2 TELECOMMUNICATIONS GROUND BAR DETAIL

NOT TO SCALE

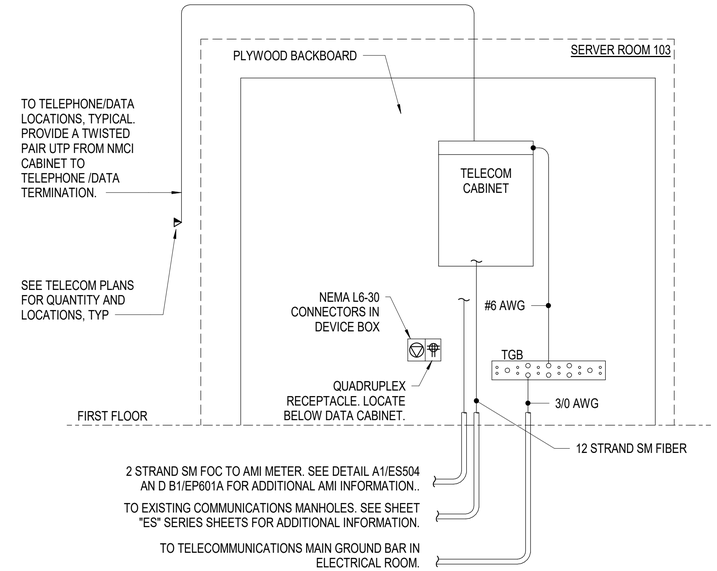

C4 TYPICAL TELECOMMUNICATIONS SYSTEM RISER AND GROUNDING RISER DIAGRAM

NOT TO SCALE

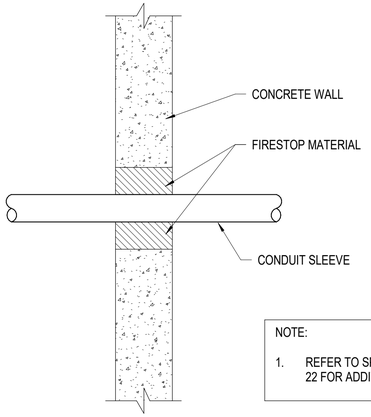

NOTE:

1. REFER TO SPECIFICAITON 07 84 00.00 22 FOR ADDITIONAL INFORMATION.

B1 TYPICAL CONDUIT PENETRATION AT FIREPROOF WALL

NOT TO SCALE

TYPICAL OVERALL DIMENSION:
HEIGHT: 7'
WIDTH: 19"
DEPTH: 30"

SUPPORT 19" EQUIPMENT

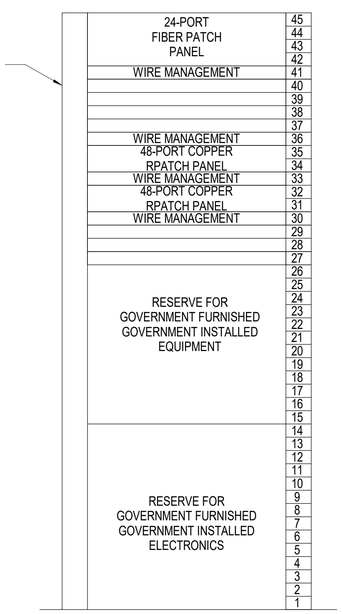

A4 NIPR TELECOM RACK DETAIL

NOT TO SCALE

SYM	DESCRIPTION	DATE	APPR

A/E INFO

APPROVED

FOR COMMANDER NAVFAC

ACTIVITY: Approved by LCDR VINCE DEL GRECO, ROICC with PWD YORKTOWN, via Email.

SATISFACTORY TO DATE 03/26/2026

DES CPO	DRW CPO	CHK JDU	
PM/DM	MME/WJW		
BRANCH MANAGER	WRB		
CHIEF ENG/ARCH	JWJ		
FIRE PROTECTION	HPN		

DEPARTMENT OF THE NAVY
NAVAL FACILITIES ENGINEERING SYSTEMS COMMAND
MIDLANT DC CORE
NAVAL FACILITIES ENGINEERING SYSTEMS COMMAND - MID-ATLANTIC
NAVAL STATION - NORFOLK, VA
NAVAL WEAPONS STATION
YORKTOWN, VIRGINIA
P171 WEAPON MAGAZINES
SEGREGATION FACILITIES
TELECOMMUNICATIONS RISER DIAGRAMS AND DETAILS

SCALE: AS NOTED
EPROJECT NO.: 1737010
CONSTR. CONTR. NO.
NAVFAC DRAWING NO. 12942144
SHEET 464 OF 499

TT601A

DRAWFORM REVISION: 25 AUGUST 2020

4/1/2026 2:24:55 PM TT601A
C:\Revit Local Files\P171-1737010-E-R21-SEG_clayton.obrien.rvt

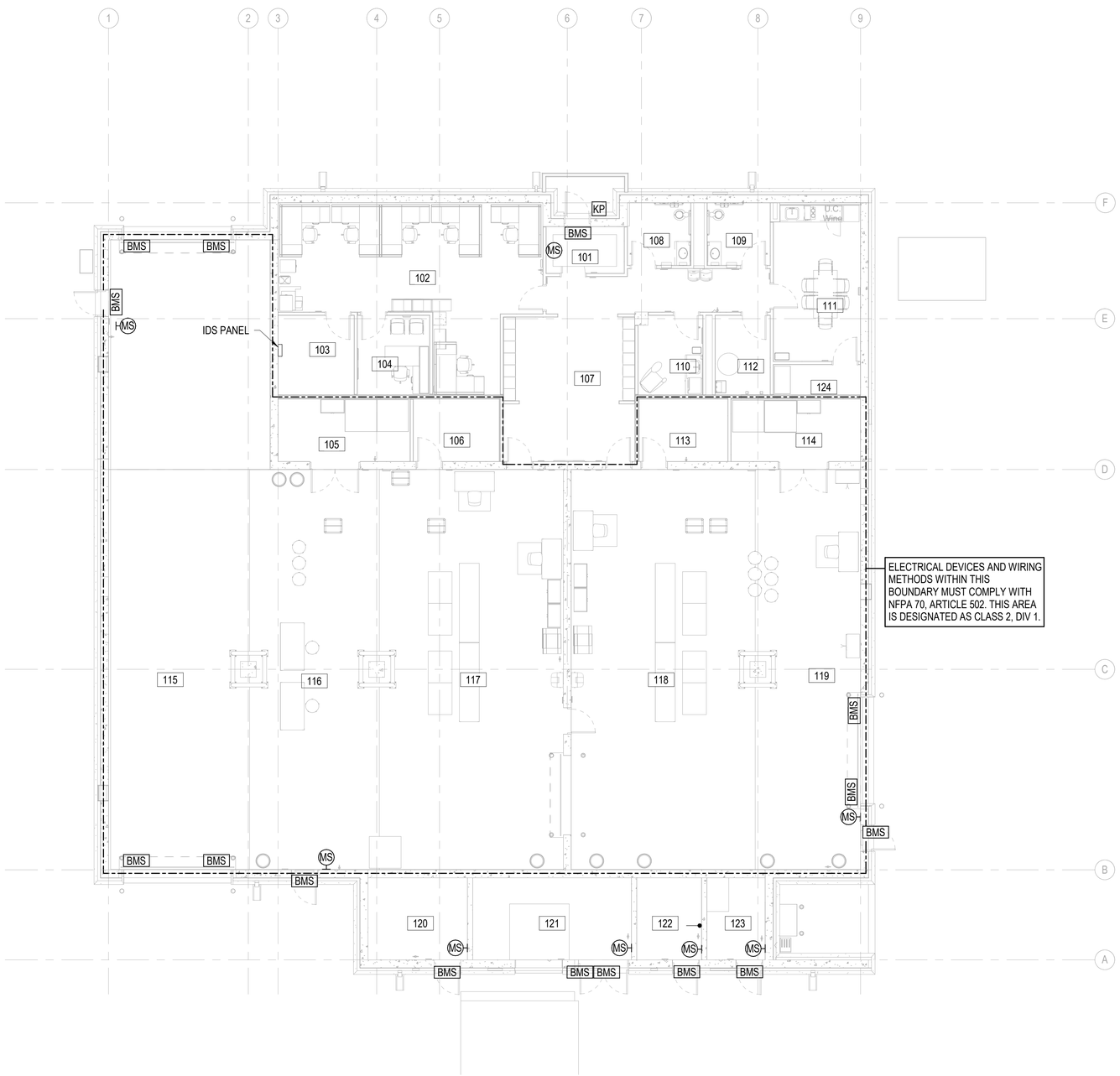

FLOOR PLAN - TELECOMMUNICATIONS AND SECURITY

1/8" = 1'-0"

PLAN NORTH — BLDG 1

PLAN NORTH — BLDG 2

ELECTRICAL SHEET NOTES

A. SECURITY DEVICES IS GOVERNMENT FURNISHED, GOVERNMENT INSTALLED. PROVIDE BOXES AND CONDUIT ONLY. PROVIDE BACK BOXES AS REQUIRED FOR EACH DEVICE. SEE SECURITY DETAILS ON TY501.

B. ROOM(S) 105,106,113,114,115,116,117,118 AND 119 ARE DESIGNATED AS HAZARDOUS LOCAITON, CLASS 2, DIV 1 AND MUST COMPLY WITH NFPA 70, ARTICLE 502.

C. PROVIDE BUILDING ENVELOPE PENETRATION ASSEMBLY MATERIALS,COMPONENTS, SEALS, FLASHING, AND SUPPORT IN ACCORDANCE WITH THE AIR BARRIER SPECIFICATION SECTIONS AND DETAILS IN THE CONTRACT DRAWINGS. PROVIDE BULDING SYSTEM PENETRATING ITEMS SUPPORTED TO PREVENT MOVEMENT AND MINIMIZE VIBRATION AT THE INTERSECTION OF THE PENETRANT AND AIR BARRIER. CONFIGURE SYSTEMS TO ALLOW MOVEMENT AND VIBRATION ELSEWHERE WITHIN THE SYSTEM.

D. COORDINATE BUILDING SYSTEM PENETRATING COMPONENT WITH ENVELOPE PENETRATION LOCATION, COMPLETE SIZE, AND SLEEVE TYPE SHOWN IN THE CONTRACT DOCUMENTS PRIOR TO CONSTRUCTION OF THE BUILDING ENVELOPE.

E. PROVIDE TESTED FIRE RESISTANCE RATED PENETRATION ASSEMBLIES. REFERENCE SHEET GI101A FOR FIRE RESISTANCE RATED SEPARATION LOCATIONS AND RATINGS.

ELECTRICAL KEYNOTES

ROOM SCHEDULE

ROOM NUMBER	ROOM NAME
101	VESTIBULE
102	OPEN OFFICE
103	SERVER
104	SHOP LEAD
105	GENERAL STORAGE
106	SECURE TOOL ROOM A
107	CORRIDOR
108	TOILET
109	TOILET
110	MOTHERS ROOM
111	PLANNING ROOM
112	CUSTODIAN
113	SECURE TOOL ROOM B
114	GENERAL STORAGE
115	CONTAINER TRANSFER BAY A
116	SEGREGATION CELL A
117	OPEN SEGREGATION AREA A
118	OPEN SEGREGATION AREA B
119	SEGREGATION CELL B
120	SPRINKLER ROOM
121	MECHANICAL ROOM
122	ELECTRICAL ROOM
123	AIR
124	STOR.

GRAPHIC SCALE(S)

1/8" = 1' - 0" 0 5' 10' 15' 30'

SYM	DESCRIPTION	DATE	APPR

SEAL

A/E INFO

APPROVED

FOR COMMANDER NAVFAC

ACTIVITY: Approved by LCDR VINCE DEL GRECO, ROICC with PWD YORKTOWN, via Email.

SATISFACTORY TO DATE 03/26/2026

DES CPO | DRW CPO | CHK JDU

PM/DM MME/WJW

BRANCH MANAGER WRB

CHIEF ENG/ARCH JWJ

FIRE PROTECTION HPN

DEPARTMENT OF THE NAVY
NAVAL FACILITIES ENGINEERING SYSTEMS COMMAND
MIDLANT DC CORE
NAVAL FACILITIES ENGINEERING SYSTEMS COMMAND - MID-ATLANTIC
NAVAL STATION - NORFOLK, VA
NAVAL WEAPONS STATION
YORKTOWN, VIRGINIA
P-171 WEAPON MAGAZINES
FLOOR PLAN - SECURITY

SCALE: AS NOTED

EPROJECT NO.: 1737010

CONSTR. CONTR. NO.

NAVFAC DRAWING NO. 12942145

SHEET 465 OF 499

TY101A

DRAWFORM REVISION: 25 AUGUST 2020

4/1/2026 2:24:56 PM TY101A
C:\Revit Local Files\P171-1737010-E-R21-SEG_clayton.obrien.rvt

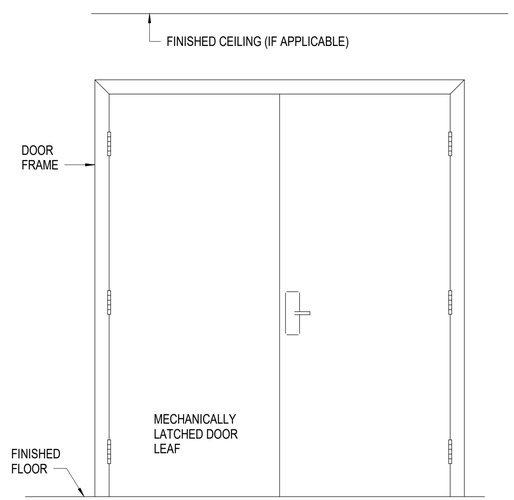

INGRESS SIDE

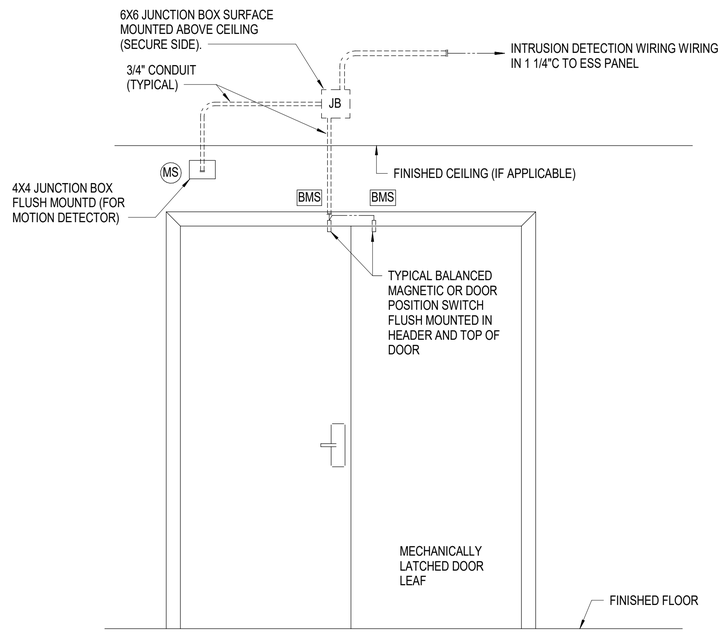

EGRESS SIDE

C1 TYPICAL CARD READER DOUBLE DOOR ELEVATION

NOT TO SCALE

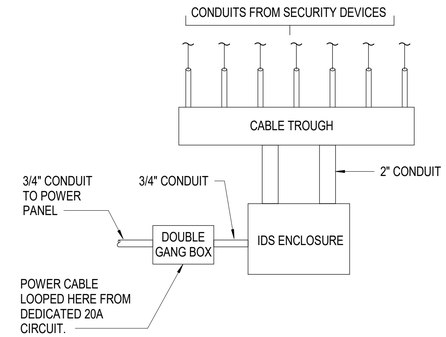

C4 IDS CONNECTION DIAGRAM

NOT TO SCALE

ELECTRICAL SHEET NOTES

A. REFER TO ELECTRONIC SECURITY PLANS FOR INDIVIDUAL DOOR TYPE LOCATIONS.

B. PROVIDE ACCESS CONTROL WIRING AS REQUIRED. COORDINATE WIRING REQUIREMENTS AND ACCESS CONTROL INTERFACE WITH ACTUAL DOOR HARDWARE PROVIDED.

C. DOORS, FRAMES, HARDWARE AND LOCKING HARDWARE PROVIDED AND INSTALLED BY DOOR HARDWARE PROVIDER.

D. ALL COMPONENTS OF THE ACCESS CONTROL SYSTEM MUST BE UL294 LISTED.

E. LATCH AND HINGE SIDES OF DOORS ARE VARIED FOR INDIVIDUAL DOORS. VERIFY LATCH AND HINGE SIDE FOR EACH DOOR PRIOR TO ROUGH-IN.

F. VERIFY ALL CONDUIT SIZES, BOX SIZES AND CONNECTIVITY WITH ELECTRONIC SECURITY SYSTEM INSTALLER PRIOR TO ROUGH-IN. ANY CHANGES REQUIRED AFTER ROUGH-IN MUST BE PERFORMED AT NO ADDITIONAL COST TO THE OWNER.

G. ACCESS CONTROL WIRING MUST BE INSTALLED IN 3/4" CONDUIT UNLESS OTHERWISE NOTED.

H. DASHED LINES INDICATE ITEMS CONCEALED IN WALL OR ABOVE CEILING.

I. WHERE CREDENTIAL DEVICE IS TO BE LOCATED BENEATH SIGNAGE, COORDINATE HORIZONTAL MOUNTING LOCATION OF CREDENTIAL DEVICE TO BE CENTERED ON SIGNAGE . WHERE SIZE OF SIGNAGE DOES NOT ALLOW FOR MOUNTING OF CREDENTIAL DEVICE AT 42"AFF TO CENTER, ADJUST CREDENTIAL DEVICE MOUNTING HEIGHT TO PROVIDE A MINIMUM OF 1/2" CLEAR FROM THE BOTTOM OF SIGNAGE TO THE TOP OF THE CREDENTIAL DEVICE. REFER TO INTERIOR SIGNAGE PLANS FOR SIGNAGE LOCATION AND TYPE.

J. SEAL ALL PENETRATIONS AIRTIGHT USING ACOUSTICAL SEALANT TO MAINTAIN THE AIR BARRIER. FILL ALL VOIDS AROUND PENETRATIONS WITH SOUND ATTENUATION BLANKET. SEE DETAIL C5/AE504.

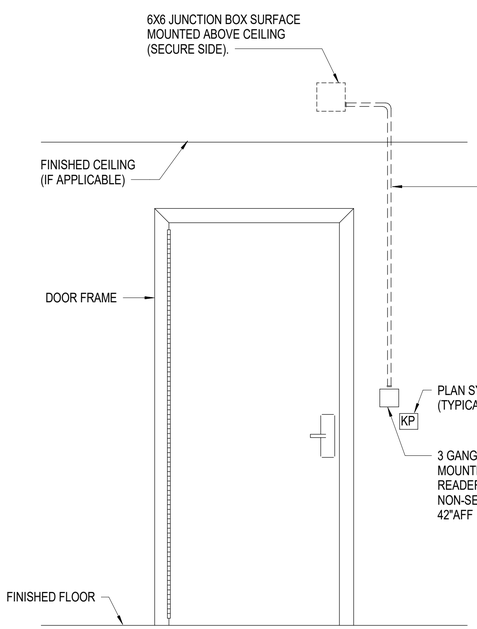

UNSECURE SIDE

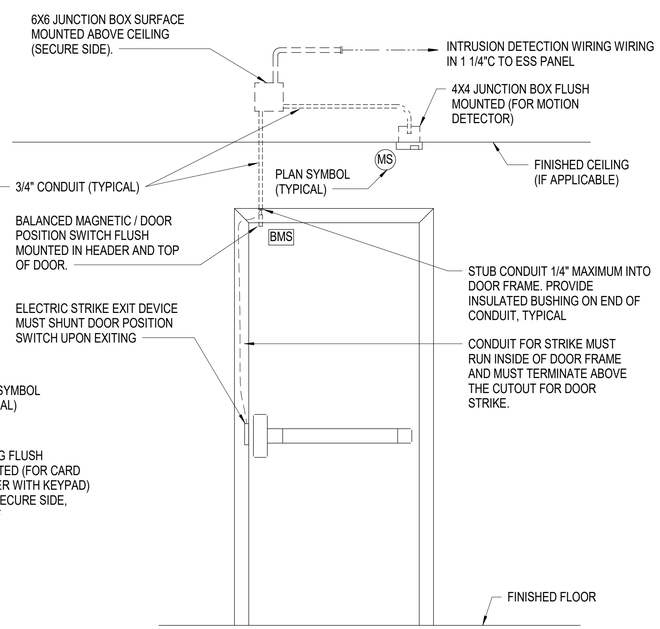

SECURE SIDE

A1 TYPICAL CARD READER DOOR ELEVATION

NOT TO SCALE

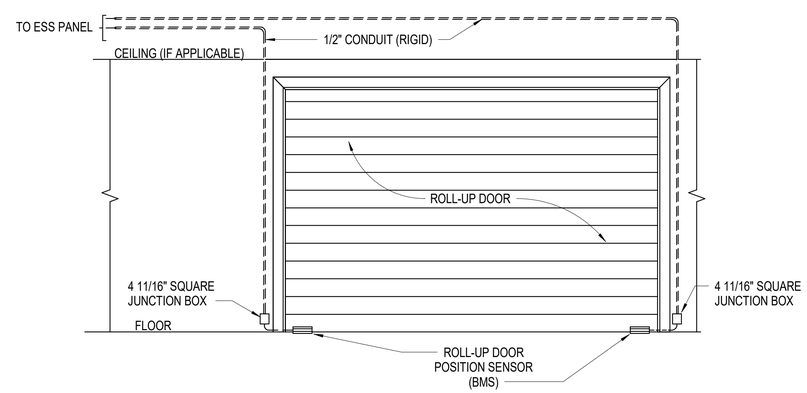

A4 TYPICAL ROLL-UP DOOR ELEVATION

NOT TO SCALE

SYM	DESCRIPTION	DATE	APPR

SEAL

A/E INFO

APPROVED

FOR COMMANDER NAVFAC

ACTIVITY: Approved by LCDR VINCE DEL GRECO, ROICC with PWD YORKTOWN, via Email.

SATISFACTORY TO DATE 03/26/2026

DES CPO | DRW CPO | CHK JDJ

PM/DM MME/WJW

BRANCH MANAGER WRB

CHIEF ENG/ARCH JWJ

FIRE PROTECTION HPN

DEPARTMENT OF THE NAVY
NAVAL FACILITIES ENGINEERING SYSTEMS COMMAND
MIDLANT DC CORE

NAVAL FACILITIES ENGINEERING SYSTEMS COMMAND - MID-ATLANTIC
NAVAL STATION - NORFOLK, VA

NAVAL WEAPONS STATION YORKTOWN, VIRGINIA

P-171 WEAPON MAGAZINES

SECURITY DETAILS

SCALE: AS NOTED

EPROJECT NO.: 1737010

CONSTR. CONTR. NO.

NAVFAC DRAWING NO. 12942146

SHEET 466 OF 499

TY501A

DRAWFORM REVISION: 25 AUGUST 2020

4/1/2026 2:24:56 PM TY501A
C:\Revit Local Files\P171-1737010-E-R21-SEG_clayton.obrien.rvt