US Army Corps of Engineers®

WALLA WALLA DISTRICT

VOLUME 1 - SPARE TRANSFORMERS T1

VOLUME 2 - SPARE TRANSFORMERS T2

LITTLE GOOSE LOCK AND DAM
LOWER SNAKE RIVER SPARE TRANSFORMERS
T2

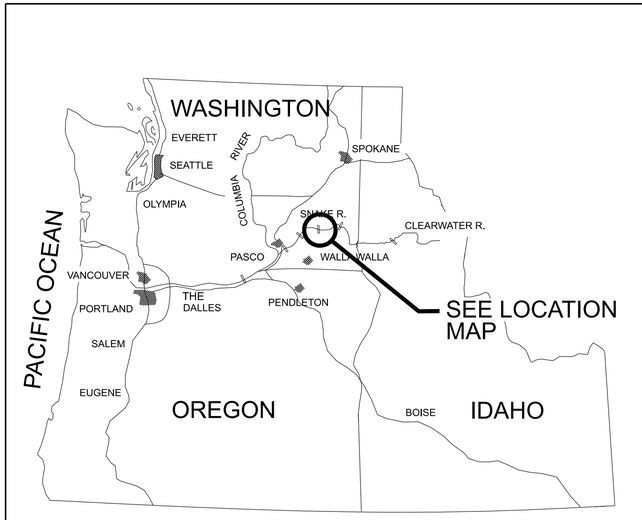

D1 VICINITY MAP
SCALE: NTS

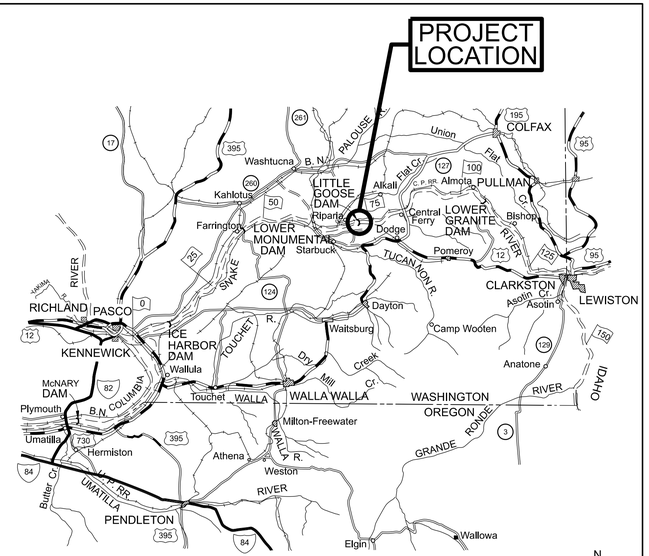

D7 LOCATION MAP
SCALE: NTS

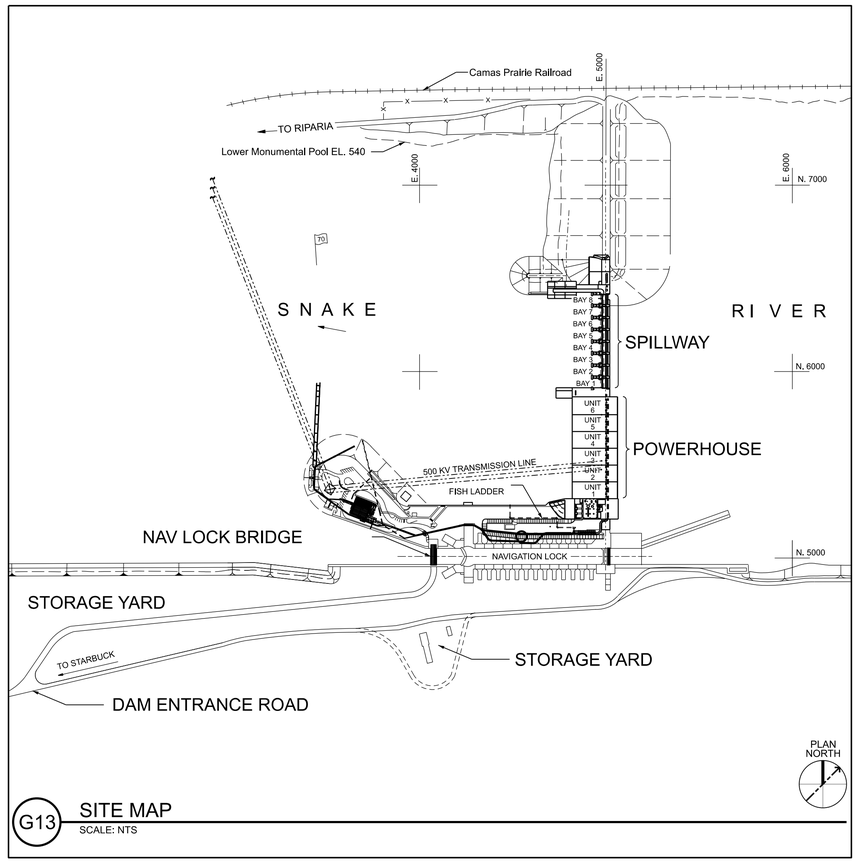

G13 SITE MAP
SCALE: NTS

SOLICITATION NO.: W912EF26RA003

CONTRACT NO.:

ISSUE DATE: OCTOBER 2025

VOLUME NO.: 2

THIS PROJECT WAS DESIGNED BY THE HYDROELECTRIC DESIGN CENTER OF THE U.S. ARMY CORPS OF ENGINEERS. THE INITIALS OR SIGNATURES AND REGISTRATION DESIGNATIONS OF INDIVIDUALS APPEAR ON THESE PROJECT DOCUMENTS WITHIN THE SCOPE OF THEIR EMPLOYMENT AS REQUIRED BY ER 1110-1-8152.

APPROVED BY: FINK.JORDAN.S.1391890664 Digitally signed by FINK.JORDAN.S.1391890664 Date: 2025.09.24 08:55:42 -07'00'

JORDAN S. FINK, P.E.
DIRECTOR OF
HYDROELECTRIC DESIGN CENTER

SUBMITTED BY: CASPER.TERESA.1513254853 Digitally signed by CASPER.TERESA.1513254853 Date: 2025.09.23 14:38:38 -07'00'

JOHN Z. YEN, P.E.
CHIEF OF ELECTRICAL BRANCH
HYDROELECTRIC DESIGN CENTER

APPROVED BY: Dwayne M. Weston

DWAYNE WESTON, P.E.
CHIEF OF ENGINEERING & CONST DIV.
WALLA WALLA DISTRICT

SUBMITTED BY:

MARCUS PALMER, P.E.
CHIEF OF DESIGN BRANCH
WALLA WALLA DISTRICT

SUBMITTED BY: Kameron D Sullivan

LEVI VAN STEDUM, P.E.
CHIEF OF ELECTRICAL DESIGN SECTION
WALLA WALLA DISTRICT

US Army Corps of Engineers®

MARK	DESCRIPTION	DATE

DESIGNED BY: T. CASPER, P.E.
DRAWN BY: M. GUNDRUM
CHECKED BY: S. COTNER, P.E.
SUBMITTED BY: JORDAN S. FINK, P.E.
SIZE: FILENAME: ANSI D LG503118_G-001.dgn
ISSUE DATE: OCTOBER 2025
SOLICITATION NO.: W912EF26RA003
CONTRACT NO.:
FILE NUMBER: LGP-14-AA01
FILENAME: LG503118_G-001.dgn

U.S. ARMY CORPS OF ENGINEERS
WALLA WALLA DISTRICT
201 N 3RD AVE
WALLA WALLA, WASHINGTON

US ARMY CORPS OF ENGINEERS
HYDROELECTRIC DESIGN CENTER
333 SW 1ST AVE
PORTLAND, OREGON

LITTLE GOOSE LOCK AND DAM
LOWER SNAKE RIVER SPARE TRANSFORMERS
T2

PROJECT LOCATION AND VICINITY MAP

SHEET ID
VOLUME 2
G-001

DS:
PD:
1:23:54 PM 9/22/2025

FINAL

DRAWING INDEX

SHEET NO.	DRAWING NUMBER	TITLE
		GENERAL
G-001	LGS-1-0-A-0/1	PROJECT LOCATION AND VICINITY MAP
G-002	LGS-1-0-A-0/2	DRAWING INDEX
G-003	LGS-1-0-A-0/3	TRANSFORMER SITE DELIVERY AND STORAGE LOCATION
G-004	LGS-1-0-A-0/4	TRANSFORMER REQUIREMENTS SUMMARY SHEET
G-005	LGS-1-0-A-0/5	REGIONAL TEMPERATURE ANNUAL SUMMARY
G-006	LGS-1-0-A-0/6	SITE LOCATIONS PHOTOGRAPHS -- SHEET 1
G-007	LGS-1-0-A-0/7	SITE LOCATIONS PHOTOGRAPHS -- SHEET 2
		ELECTRICAL
E-101	LGS-1-6-1A40/1	GSU TRANSFORMER -- LAYOUT AND LIMITING DIMENSIONS -- COVER
E-102	LGS-1-6-1A40/2	GSU TRANSFORMER -- LAYOUT AND LIMITING DIMENSIONS -- SEGMENT 1
E-103	LGS-1-6-1A40/3	GSU TRANSFORMER -- LAYOUT AND LIMITING DIMENSIONS -- SEGMENT 2
E-104	LGS-1-6-1A40/4	GSU TRANSFORMER -- LAYOUT AND LIMITING DIMENSIONS -- SEGMENT 3
E-105	LGS-1-6-1A40/5	GSU TRANSFORMER -- LAYOUT AND LIMITING DIMENSIONS -- SEGMENT 4
E-106	LGS-1-6-1A40/6	POWER AND CONTROL CABINETS
E-107	LGS-1-6-1A40/7	CONTROL CABINET LAYOUT
E-108	LGS-1-6-1A40/8	POWER CABINET LAYOUT
E-109	LGS-1-6-1A40/9	TRANSFORMER MOUNTED DEVICES -- LAYOUT AND DETAILS
E-601	LGS-1-6-1A24/1	CONTROL SCHEMATICS
E-602	LGS-1-6-1A24/2	ANNUNCIATOR SCHEMATICS
E-603	LGS-1-6-1A24/3	CONTROL CABINET EXTERNAL CONNECTIONS

DRAWING INDEX

SHEET NUMBER	DRAWING NUMBER	TITLE

US Army Corps of Engineers®

MARK	DESCRIPTION	DATE

DESIGNED BY: T. CASPER, P.E.
DRAWN BY: M. GUNDRUM
CHECKED BY: S. COTNER, P.E.
SUBMITTED BY: JORDAN S. FINK, P.E.
SIZE: ANSI D
ISSUE DATE: OCTOBER 2025
SOLICITATION NO.: W912EF26RA003
CONTRACT NO.:
FILE NUMBER: LGP-1-0-A-0/2
FILENAME: LGS03118_G-002.dgn

U.S. ARMY CORPS OF ENGINEERS
WALLA WALLA DISTRICT
201 N 3RD AVE
WALLA WALLA, WASHINGTON

US ARMY CORPS OF ENGINEERS
HYDROELECTRIC DESIGN CENTER
333 SW 1ST AVE
PORTLAND, OREGON

LITTLE GOOSE LOCK AND DAM
LOWER SNAKE RIVER SPARE TRANSFORMERS
T2

DRAWING INDEX

SHEET ID
VOLUME 2
G-002

FINAL

DS: LGS03118_G-002.dgn
PD: 9:49:31 AM 9/19/2025

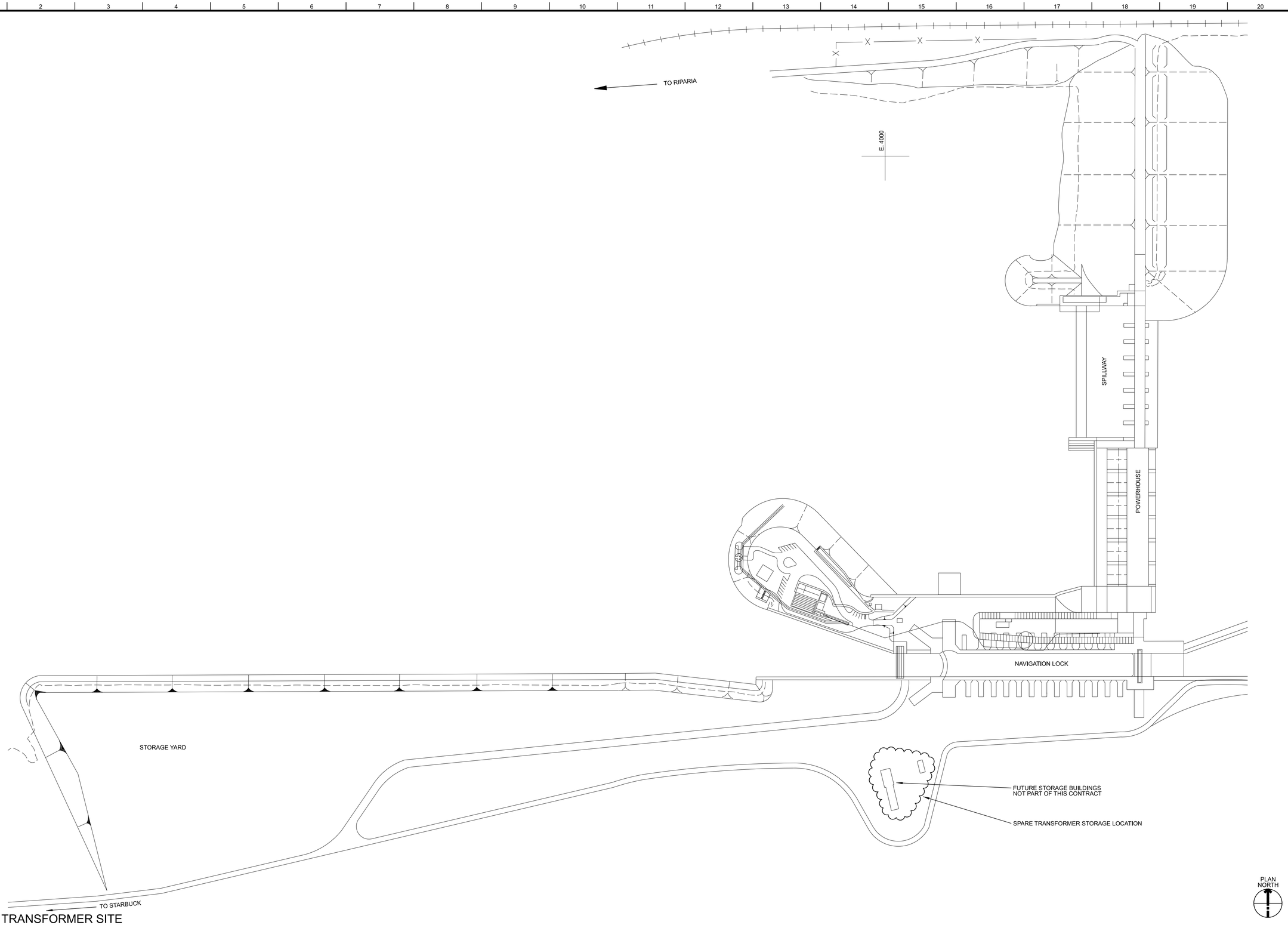

A1 TRANSFORMER SITE

SCALE: NTS

US Army Corps of Engineers®

MARK	DESCRIPTION	DATE

ISSUE DATE:	OCTOBER 2025
SOLICITATION NO.:	W912EF26RA003
CONTRACT NO.:	
FILE NUMBER:	LGP-14-A-03
DESIGNED BY:	T. CASPER, P.E.
DRAWN BY:	M. GUNDRUM
CHECKED BY:	S. COTNER, P.E.
SUBMITTED BY:	JORDAN S. PRINK, P.E.
SIZE:	ANSI D
FILENAME:	LGS03118_G-003.dgn

U.S. ARMY CORPS OF ENGINEERS
WALLA WALLA DISTRICT
201 N 3RD AVE
WALLA WALLA, WASHINGTON

US ARMY CORPS OF ENGINEERS
HYDROELECTRIC DESIGN CENTER
333 SW 1ST AVE
PORTLAND, OREGON

LITTLE GOOSE LOCK AND DAM
LOWER SNAKE RIVER SPARE TRANSFORMERS
T2

TRANSFORMER SITE DELIVERY AND STORAGE LOCATION

SHEET ID
VOLUME 2
G-003

FINAL

DS: LGS03118_G-003.dgn
PD: 9:49:37 AM 9/19/2025

LITTLE GOOSE 500 KV SPARE GSU TRANSFORMER REQUIREMENTS SUMMARY SHEET

(REFERENCE SPECIFICATION SECTION 48 19 23.04 26)

NAMEPLATE DATA:

- TYPE: CLASS II GSU POWER TRANSFORMER
- COOLING CLASS: ONAN/ONAF
- KVA RATING: 82,000 / 109,334
- VOLTAGE RATINGS: 500,000 GRDY (H) - 13,200 DELTA (X) 13,200 DELTA (Y)
- BIL LEVELS, KV: 1,425 (H) / 110 (X & Y) / 150 (H0)
- PHASING: SINGLE-PHASE
- IMPEDANCE: 9.2% @ 41,000 KVA (H-X & H-Y), 20.9% @ 41,000 KVA (X-Y)
- SECONDARY WINDING (H) DETC: 5 TAPS; 3 @ +2.5%, 1 @ -2.5% OF NOMINAL 500 KV TAP
- TEMPERATURE RISE: 65 ºC
- OIL PRESERVATION SYSTEM: NITROGEN BLANKET (PREFERRED) OR CONSERVATOR TANK
- MAXIMUM SOUND LEVEL (ONAF): 74 DB
- MAXIMUM NO-LOAD LOSSES: 52 KW
- MAXIMUM LOAD LOSSES: 175 KW
- FREQUENCY: 60 HZ
- MAXIMUM WEIGHT: 352,000 POUNDS
- MAXIMUM OIL QUANTITY: 10,667 GALLONS

TANK AND CONSTRUCTION:

- MAN-HOLE: 24-INCH DIAMETER (MINIMUM TWO)
- GASKETS: NITRILE NBR (BUNA-N), DURO 50-60, 25% COMPRESSION, WITH THE EXCEPTION THAT THE LOW-VOLTAGE BUSHING GASKETS WILL BE VITON. O-RING GASKETS SHALL NOT BE USED FOR GASKET GROOVES OF RECTANGULAR CROSS-SECTION.
- VALVES: STAINLESS STEEL BALL-TYPE (RADIATORS MAY USE BUTTERFLY-TYPE)
- PERSONAL FALL ARREST SYSTEM: THE TOP OF THE TRANSFORMER TANK SHALL BE COVERED WITH A NON-SLIP MATERIAL, THE SAME COLOR AS THE TANK WALLS. A FALL PROTECTION SYSTEM, CONSISTING OF A SINGLE ANCHOR POST, SHALL BE PROVIDED.
- BASE: DESIGNED FOR PAD MOUNTING WITH SEISMIC WELDING TO STEEL PLATES.
- LIFTING EYES: DESIGN LOADS FOR EACH EYE SHALL BE TWO TIMES THE ACTUAL LOAD.
- SEISMIC: SEISMIC CALCULATIONS REQUIRED FOR MAIN TANK AND ALL MAJOR COMPONENTS.
- CORE: LAMINATIONS MAXIMUM THICKNESS OF 0.270MM, COLD-ROLLED, GRAIN-ORIENTED STEEL. MAXIMUM DESIGN FLUX DENSITY OF 1.75 TESLA. STEP-LAP CONSTRUCTION.
- RADIATORS: HOT-DIP GALVANIZED.
- COOLING FANS: HORTIZONTAL-DRAFT

ACCESSORIES:

- WTI AND OTI GAUGES WITH RTDS - HARDENED FOR HARSH WEATHER CONDITIONS
- DIRECTED-FLOW PRESSURE RELIEF DEVICE WITH METAL DISCHARGE PIPING
- TRANSFORMER EMBEDDED FIBER-OPTIC WINDING TEMPERATURE MEASUREMENT PROBES

BUSHINGS:

- SECONDARY WINDING (H): 500 KV CLASS, MINIMUM 1,500 KV BIL, 1,600 AMP, OIL-FILLED BUSHING
  HITACHI TYPE O+ C T550W2000VV
  (TWO 1200:5 MRCT)
- PRIMARY WINDING (X): 25 KV CLASS, MINIMUM 150 KV BIL, 7,500 AMP, PORCELAIN CONSTRUCTION, BULK-TYPE, LOW-CORONA, LIGHT CONTAMINATION, 125 ºC TEMPERATURE RISE RATING
  HITACH TYPE RJ T025B0750EC
  (BUSHING CURRENT TRANSFORMERS AS REQUIRED FOR THE WINDING TEMPERATURE INDICATING EQUIPMENT)
- NEUTRAL (H0): 25 KV CLASS, MINIMUM 150 KV BIL, 1,200 AMP
  HITACHI TYPE O+ C T025W0412AT
- CORE GROUNDS: 2.5 KV CLASS, 45 KV BIL, 100 AMP

INSULATING OIL:

- TYPE: NAPTHENIC BASE - ASTM D 3487 TYPE II; 0.3% BY MASS OF OXIDATION INHIBITOR

SEPARATE CONTROL AND POWER CABINETS:

- CABINET MATERIAL: WEATHER-PROOF TYPE 304 STAINLESS STEEL WITH LOCKING PROVISIONS. WINDOWS FOR VIEWING THE TEMPERATURE MONITOR AND ANNUNCIATOR IN CONTROL CABINET. SOLAR SHIELDING ON TOP, FRONT AND SIDE PANELS OF ENCLOSURES.
- GOVERNMENT-FURNISHED POWER: CONTROL POWER - 125 V DC; ANNUNCIATION POWER - 125 V DC; COOLING FANS - 480 V AC, 3-WIRE, 3-PHASE, 60 HZ
- WIRING: XLPE; 3-PHASE POWER CONDUCTORS COLOR CODED: PHASE A - BROWN; PHASE B - ORANGE; PHASE C - YELLOW; GROUNDED NEUTRAL - WHITE; INSULATED GROUND - GREEN/YELLOW
- CONDUIT: ALL WIRING TO BE RUN IN CONDUIT. WIRE RUNS THROUGH TANK REINFORCING CHANNELS NOT ALLOWED. ALL CONDUIT THREADED JOINTS SHALL HAVE A CONDUCTIVE JOINT COMPOUND APPLIED. OUTLET AND JUNCTION BOXES SHALL BE MALLEABLE CAST IRON WITH CAST COVERS AND LIQUID-TIGHT HUBS.
- TERMINAL BLOCKS: 600 V, 30 A MINIMUM, 90 ºC RATED TERMINATIONS.
- AUXILIARY RELAYS:
  - RATED FOR 125 V DC OR 120 V AC; MEETS REQUIREMENTS OF NEMA ICS5; 10 A CONTACTS
  - SINGLE-CONTACT INDUCTIVE LOAD INTERRUPTING CAPACITY: 125 V DC CIRCUITS - 1.0 A; 120 V AC CIRCUITS - 6.0 A
- SWITCHES:
  - RATED FOR 600 V AC OR 250 V DC
  - SINGLE-BREAK INDUCTIVE LOAD INTERRUPTING RATING: 125 V DC CIRCUITS - 1.5 A; 120 V AC CIRCUITS - 10 A
- MOLDED-CASE CIRCUIT BREAKERS:
  - 480 V AC CIRCUITS - RATED 600 V AC AND 35,000 A INTERRUPTING AT 480 VAC
  - 120 V AC CIRCUITS - RATED 250 V DC AND 120/240 OR 240 V AC, AND 10,000 A INTERRUPTING
  - 125 AND 250 V DC CIRCUITS - RATED 125/250 OR 250 V DC, AND 10,000 A INTERRUPTING
- SPECIAL FEATURES:
  - ALL CIRCUITS, WIRING AND EQUIPMENT RATED GREATER THAN 120 V AC TO BE MOUNTED IN POWER CABINET.
  - 120 V AC, 1,000 LUMEN LED TYPE A19 LAMPS WITH DOOR-ACTUATED SWITCH.
  - 120 V AC, 20 A HOSPITAL GRADE GFCI RECEPTACLE MOUNTED INSIDE THE CONTROL CABINET.
  - PTC RESISTOR DESIGN ENCLOSURE HEATERS WITH INTEGRAL FANS, AND INDUSTRIAL GRADE HUMIDISTAT / THERMOSTAT CONTROL.
  - FOLD-DOWN MAINTENANCE TRAY ON INSIDE OF CONTROL CABINET DOOR.
- NAMEPLATES: CAST BRONZE OR STAINLESS STEEL; IEEE C57.12.00, TABLE 7, INCLUDING MANUFACTURING DATE, PLANT LOCATION, GOVERNMENT CONTRACT NUMBER, PRESSURE AND VACUUM THE TANK WILL WITHSTAN, DRY WEIGHT OF THE INSULATION, AND CALCULATED X/R RATIO. AN ADDITIONAL DIAGRAM NAMEPLATE FOR SLING LOCATIONS AND LIFT POSITIONS SHALL ALSO BE PROVIDED. EQUIPMENT NAMEPLATES SHALL BE PROVIDED FOR THE HIGH-VOLTAGE BUSHINGS AND LOW-VOLTAGE BUSHINGS MADE OF STAINLESS STEEL WITH BLACK LETTERING. DEVICE NAMEPLATES WITHIN THE CONTROL AND POWER CABINETS SHALL BE ANODIZED ALUMINUM OR STAINLESS STEEL WITH ENGRAVED BLACK LETTERING.

FACTORY ASSEMBLY AND PAINT:

- ASSEMBLY: TRANSFORMER TO BE FULLY ASSEMBLED, WITH REMOVABLE COMPONENTS MATCH-MARKED FOR EASE OF REASSEMBLY.
- EXTERIOR PAINT: PRIMER COAT, EPOXY BASE COAT, POLYURETHANE TOP COAT - MUNSELL 5BG 7/0.4 HIGH-GLOSS (ANSI NO. 70 GRAY). CORROSION RESISTANT SURFACES, AND STAINLESS STEEL CABINETS, SHALL REMAIN UNPAINTED. COVER TO RECEIVE A NON-SLIP COATING.
- INTERIOR PAINT: PRIMER COAT, OIL-RESISTANT FINISH COAT - WHITE. ALLOW TO CURE FOR ONE WEEK PRIOR TO OIL FILLING.
- INSPECTIONS: GOVERNMENT INSPECTIONS PERFORMED DURING
  (1) DESIGN REVIEW MEETING
  (2) AFTER COMPLETION OF WINDINGS BUT PRIOR TO LANDING ON CORE
  (3) COMPLETED CORE/COIL ASSEMBLY, BUT PRIOR TO TANKING (IF PROVIDING A CORE TYPE TRANSFORMER)
  (4) COMPLETELY ASSEMBLED AND WITNESSING OF FACTORY ACCEPTANCE TESTS

FACTORY ACCEPTANCE TESTS (F.A.T.):

- ALL 'ROUTINE' TESTS (IEEE C57.12.00, TABLE 17)
- TEMPERATURE RISE TESTS SHALL BE PERFORMED AT EACH COOLING STAGE
- LIGHTNING IMPULSE TESTS
- AUDIBLE SOUND LEVEL TESTS SHALL BE PERFORMED
- INDUCED VOLTAGE TEST ACCEPTANCE CRITERIA: 7,200 CYCLE ENHANCEMENT LEVEL: 500 PC; ONE HOUR LEVEL: 300 PC
- LEAKAGE REACTANCE (WITH ELECTRONIC DATA FILES)
- SWEEP FREQUENCY RESPONSE ANALYSIS (WITH ELECTRONIC DATA FILES)
  - CABLE INTEGRITY TEST REQUIRED
  - ONE SFRA TEST TO BE PERFORMED WITH THE TRANSFORMER FULLY ASSEMBLED AND OIL FILLED
  - ONE SFRA TEST TO BE PERFORMED WITH THE TRANSFORMER IN THE SHIPPING CONFIGURATION
- DE-ENERGIZED TAP CHANGER MECHANICAL OPERATIONAL TEST (5 COMPLETE CYCLES)
- ALL ELECTRICAL AND ELECTO-MECHANICAL DEVICES SHALL BE FUNCTIONALLY TESTED
- EACH HIGH-VOLTAGE AND HIGH-VOLTAGE NEUTRAL BUSHING SHALL UNDERGO CAPACITANCE AND POWER FACTOR TESTS DURING TRANSFORMER F.A.T.
- BUSHING CURRENT TRANSFORMER ROUTINE TESTS
- ANALOG TEMPERATURE GAGE FUNCTIONAL VERIFICATION

SPARE PARTS:

- (QTY 1): COMPLETE GASKET SET
- (QTY 1): SET OF GASKETS FOR TRANSFORMER REASSEMBLY
- (QTY 1): RELAY AND CONTACTOR OF EACH TYPE AND RATING
- (QTY 1): PRESSURE RELIEF DEVICE
- (QTY 1): LIQUID LEVEL INDICATOR
- (QTY 1): WINDING TEMPERATURE INDICATOR
- (QTY 1): OIL TEMPERATURE INDICATOR
- (QTY 1): BUSHING CURRENT TRANSFORMER OF EACH TYPE AND RATING
- (QTY 2): COOLING FAN COMPLETE WITH MOTOR
- (QTY 1): CRATED RADIATOR
- (QTY 3): FIBER OPTIC EXTENSION CABLE THAT CONNECTS THE FEED-THROUGH WALL PLATE LEFT UNCONNECTED
- (QTY 1): FUSE OF EACH TYPE AND RATING
- (QTY 1): PRESSURE REGULATOR IF PROVIDING A NITROGEN GAS SYSTEM
- (QTY 1): VALVE OF EACH SIZE AND TYPE
- (QTY 1): ONE BUCHHOLZ RELAY IF PROVIDING A CONSERVATOR TANK SYSTEM

US Army Corps of Engineers®

MARK	DESCRIPTION	DATE

DESIGNED BY: T. CASPER, P.E.
DRAWN BY: M. GUNDRUM
CHECKED BY: S. COTNER, P.E.
SUBMITTED BY: JORDAN S. TINKLE, P.E.
ANSI D
ISSUE DATE: OCTOBER 2025
SOLICITATION NO.: W912EF26RA003
CONTRACT NO.:
FILE NUMBER: LGP-1-G-A-004
SIZE: FILENAME: LG503118_G-004dgn.dgn

U.S. ARMY CORPS OF ENGINEERS
WALLA WALLA DISTRICT
201 N 3RD AVE
WALLA WALLA, WASHINGTON

US ARMY CORPS OF ENGINEERS
HYDROELECTRIC DESIGN CENTER
333 SW 1ST AVE
PORTLAND, OREGON

LITTLE GOOSE LOCK AND DAM
LOWER SNAKE RIVER SPARE TRANSFORMERS
T2

TRANSFORMER REQUIREMENTS SUMMARY SHEET

SHEET ID
VOLUME 2
G-004

FINAL

DS: LG503118_G-004dgn.dgn
PD: 9:49:42 AM 9/19/2025

TEMPERATURE EXTREMES LITTLE GOOSE			
RECORDS FROM:	3/1/1908	to	4/4/1983
MAXIMUM RECORDED TEMPERATURE		MAXIMUM DAILY AVERAGE TEMPERATURE	
45 °C	8/4/1961	33.1 °C	7/27/1928
OCCURANCE OF MAXIMUM RECORDED TEMPERATURES		OCCURANCES OF MAX CALCULATED DAILY AVERAGE TEMPERATURES	
DAYS	RANGE, °C	DAYS	RANGE, °C
77	≥ 40	22	≥ 30
1196	35 ≤ to < 40	683	25 ≤ to < 30

ENTIRE TEMPERATURE RECORD IN °C			
	AVG DAILY	AVG DAILY MAX	AVG DAILY MIN
JAN	-1.4	2.4	-5.2
FEB	2.0	6.4	-2.4
MAR	5.7	11.7	-0.2
APR	9.4	16.8	1.9
MAY	13.2	21.5	5.0
JUN	17.2	25.9	8.4
JUL	21.1	31.4	10.8
AUG	20.2	30.5	10.0
SEP	15.7	25.1	6.4
OCT	10.0	17.8	2.2
NOV	3.9	8.7	-0.9
DEC	0.4	4.0	-3.2

1961: YEAR OF HOTTEST DAILY MAX			
	AVG DAILY	AVG DAILY MAX	AVG DAILY MIN
JAN	1.1	4.3	-2.1
FEB	5.6	8.9	2.3
MAR	6.3	11.2	1.5
APR	8.4	14.9	1.8
MAY	12.4	19.9	4.9
JUN	19.4	29.6	9.2
JUL	21.8	32.9	10.7
AUG	22.9	33.9	12.0
SEP	13.5	22.6	4.4
OCT	8.7	16.4	1.0
NOV	0.4	6.9	-6.0
DEC	-0.6	3.4	-4.7

LITTLE GOOSE POWERHOUSE MONTHLY AVERAGES OF DAILY TEMPERATURES, ENTIRE DATA RECORD
SOURCE: STATION USC00454338
STATION NAME: LACROSSE, WA US

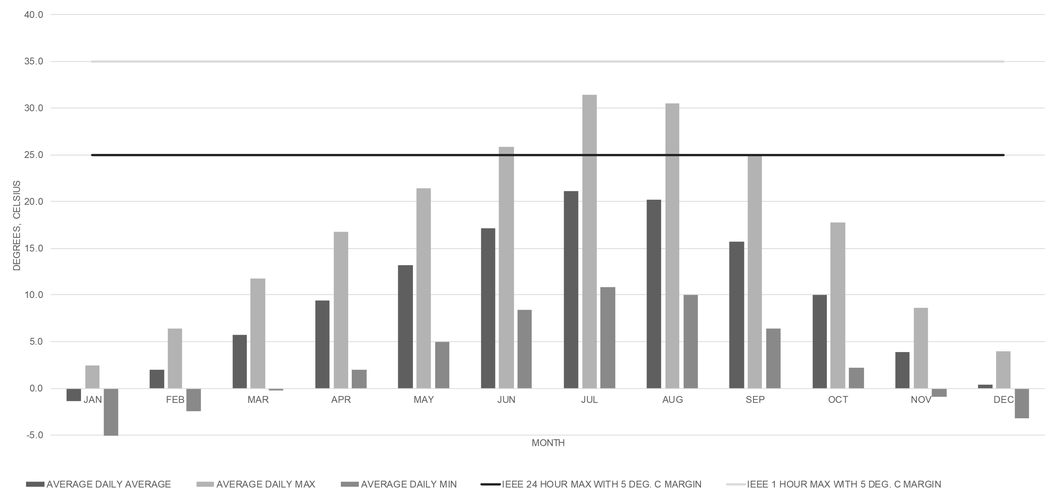

LITTLE GOOSE POWERHOUSE MONTHLY AVERAGES FROM YEAR OF HOTTEST SINGLE DAY MAX TEMPERATURE, 1961
SOURCE: STATION USC00454338
STATION NAME: LACROSSE, WA US

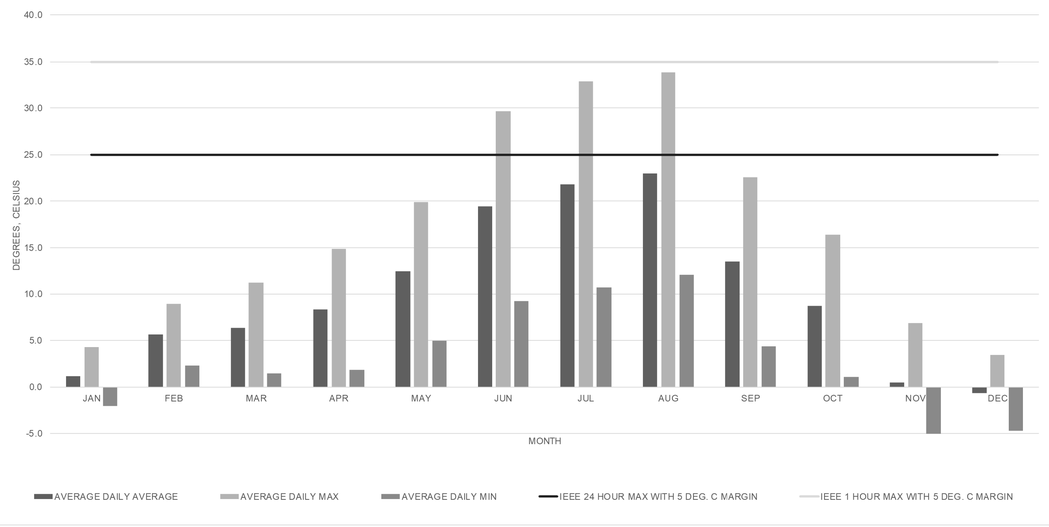

US Army Corps of Engineers®

MARK	DESCRIPTION	DATE

DESIGNED BY: T. CASPER, P.E.
DRAWN BY: J. ROSENTHAL
CHECKED BY: S. COTNER, P.E.
SUBMITTED BY: JORDAN S. FINK, P.E.
SIZE: ANSI D
ISSUE DATE: OCTOBER 2025
SOLICITATION NO.: W912EF26RA003
CONTRACT NO.:
FILE NUMBER: LGP-14-A-05
FILENAME: LG503118_G-005.dgn

U.S. ARMY CORPS OF ENGINEERS
WALLA WALLA DISTRICT
201 N 3RD AVE
WALLA WALLA, WASHINGTON

US ARMY CORPS OF ENGINEERS
HYDROELECTRIC DESIGN CENTER
333 SW 1ST AVE
PORTLAND, OREGON

LITTLE GOOSE LOCK AND DAM
LOWER SNAKE RIVER SPARE TRANSFORMERS
T2

REGIONAL TEMPERATURE ANNUAL SUMMARY

SHEET ID
VOLUME 2
G-005

FINAL

DS: LG503118_G-005.dgn
PD: 9:49:49 AM 9/19/2025

GENERAL NOTES

1. ALL PHOTOS SHOW EQUIPMENT AND STORAGE YARD AT LITTLE GOOSE DAM.

H1 STORAGE YARD MAP VIEW
SCALE: NTS

H6 STORAGE YARD
SCALE: NTS

H14 SPARE TRANSFORMER FOUNDATION PAD VIEW 1
SCALE: NTS

A1 SPARE TRANSFORMER FOUNDATION PAD VIEW 2
SCALE: NTS

A8 SPARE TRANSFORMER FOUNDATION PAD POWER
SCALE: NTS

A13 TRANSFORMER INTAKE DECK
SCALE: NTS

US Army Corps of Engineers®

MARK	DESCRIPTION	DATE

DESIGNED BY: T. CASPER, P.E.	ISSUE DATE: OCTOBER 2025
DRAWN BY: M. GUNDRUM	SOLICITATION NO.: W912EF26RA003
CHECKED BY: S. COTNER, P.E.	CONTRACT NO.:
SUBMITTED BY: JORDAN S. FINK, P.E.	FILE NUMBER: LGP-1-G-A-006
SIZE: ANSI D	FILENAME: LGS03118_G-006.dgn

U.S. ARMY CORPS OF ENGINEERS
WALLA WALLA DISTRICT
201 N 3RD AVE
WALLA WALLA, WASHINGTON

US ARMY CORPS OF ENGINEERS
HYDROELECTRIC DESIGN CENTER
333 SW 1ST AVE
PORTLAND, OREGON

LITTLE GOOSE LOCK AND DAM
LOWER SNAKE RIVER SPARE TRANSFORMERS
T2

SITE LOCATIONS PHOTOGRAPHS
SHEET 1

SHEET ID
VOLUME 2
G-006

FINAL

DS: LGS03118_G-006.dgn
PD: 9:49:57 AM 9/19/2025

D1 LITTLE GOOSE INTAKE
BRIDGE MAP VIEW
SCALE: NTS

D11 PREVIOUS SPARE TRANSFORMER
MOVEMENT ACROSS INTAKE BRIDGE
AT LITTLE GOOSE
SCALE: NTS

US Army Corps of Engineers®

MARK	DESCRIPTION	DATE

DESIGNED BY: T. CASPER, P.E.
DRAWN BY: M. GUNDRUM
CHECKED BY: S. COTNER, P.E.
SUBMITTED BY: JORDAN S. FINK, P.E.
SIZE: ANSI D

ISSUE DATE: OCTOBER 2025
SOLICITATION NO.: W912EF26RA003
CONTRACT NO.:
FILE NUMBER: LGP-14-A-007
FILENAME: LG503118_G-007.dgn

U.S. ARMY CORPS OF ENGINEERS
WALLA WALLA DISTRICT
201 N 3RD AVE
WALLA WALLA, WASHINGTON

US ARMY CORPS OF ENGINEERS
HYDROELECTRIC DESIGN CENTER
333 SW 1ST AVE
PORTLAND, OREGON

LITTLE GOOSE LOCK AND DAM
LOWER SNAKE RIVER SPARE TRANSFORMERS
T2

SITE LOCATIONS PHOTOGRAPHS
SHEET 2

SHEET ID
VOLUME 2
G-007

FINAL

DS: LG503118_G-007.dgn
PD: 9:50:06 AM 9/19/2025

BILL OF MATERIALS

ITEM	QTY	SEGMENT	DESCRIPTION	EXAMPLE	MODEL NUMBER
1	1	COVER	HIGH-VOLTAGE (H1) BUSHING	ABB-HITACHI	TYPE O+ C BUSHING T550W2000VV
2	1	COVER	HIGH-VOLTAGE NEUTRAL (H0) BUSHING	ABB-HITACHI	TYPE O+ C BUSHING T025W0412AT
3	4	COVER	LOW-VOLTAGE BUSHINGS	ABB-HITACHI	TYPE RJ BUSHING T025B0750EC
7	AS DES.	COVER	CORE & CORE FRAME GROUND BUSHINGS (SEE DETAIL F15)		
8	AS DES.	1,4	RADIATOR (TYPICAL)		
10	AS DES.	2,4	HORIZONTAL DRAFT COOLING FANS	KRENZ-VENT	
15	1	1	DUAL TANK NITROGEN REGULATOR CABINET	ABB	RND2
16	1	3	CONTROL CABINET		
17	1	3	POWER CABINET		
18	1	3	OIL LEVEL INDICATOR	QUALITROL	SERIES 042
20	5	3	THERMOWELLS (QTY. 3 - STANDARD, QTY. 2 - HEATED)		
21	1	3	RAPID PRESSURE RISE RELAY AND 1.5-INCH ISOLATION VALVE	QUALITROL & MILWAUKEE VALVE	900-003-01 & F20SS, CLASS 150
25	1	4	3-INCH MAIN OIL DRAIN VALVE	MILWAUKEE VALVE	F20SS, CLASS 150
26	1	4	1.5-INCH LOWER FILTER VALVE	MILWAUKEE VALVE	F20SS, CLASS 150
27	1	2	1.5-INCH UPPER FILTER VALVE	MILWAUKEE VALVE	F20SS, CLASS 150
28	1	COVER	3-INCH VACUUM VALVE	MILWAUKEE VALVE	F20SS, CLASS 150
30	2	3	2-INCH GAS-IN-OIL MONITOR INTERFACE VALVES	MILWAUKEE VALVE	F20SS, CLASS 150
33	1	4, COVER	PRESSURE RELIEF DEVICE WITH DISCHARGE PIPING	QUALITROL	XPRD
35	AS DES.	COVER	MANHOLE ACCESS COVER		
45	AS DES.	COVER	FALL ARREST SYSTEM MOUNTING BRACKETS	DBI-SALA	8517412
72	2	1	STABALIZING EYES		
73	3	1, 3	COMBINATION JACKING PAD, PULLING EYE AND LIFTING EYES		
74	1	3	COMBINATION UPRIGHTING AND LIFTING EYES FOR UPRIGHTING AND LIFTING COMPLETE UNIT		
77	1	3	EXTERNAL GAS EXPANSION TANK		

GENERAL NOTES

1. THE TRANSFORMER LAYOUT AND LIMITING DIMENSIONS HAVE BEEN PROVIDED FOR THE MANUFACTURER'S USE IN DESIGNING THE TRANSFORMER FOR PROPER INTERCONNECTION TO THE EXISTING EQUIPMENT AND INTERFACES IN THE TRANSFORMER VAULT. THE LOCATIONS OF THE FOLLOWING TRANSFORMER EQUIPMENT ARE CONSIDERED CRITICAL TO ASSURE PROPER INTERCONNECTION:

   A. HIGH-VOLTAGE BUSHING LOCATION AND TERMINAL CONNECTION
   B. LOW-VOLTAGE BUSHINGS LOCATIONS AND TERMINAL CONNECTIONS
   C. HIGH-VOLTAGE NEUTRAL BUSHING LOCATION AND TERMINAL CONNECTION
   D. LOW-VOLTAGE BUSHING HOUSING FLANGE DIMENSION AND LOCATION
   E. CONTROL AND POWER CABINETS
   F. ANCILLARY DEVICES
   G. JACKING & LIFTING FACILITIES
   H. STRUCTURAL BASE
   I. MAXIMUM OVERALL WIDTH
   J. MAXIMUM OVERALL LENGTH

2. THE DRAWING SHOWN IS BASED ON THE WESTINGHOUSE SHELL-FORM DRAWINGS WITH AN INERT-GAS OIL PRESERVATION SYSTEM. IF A CORE-FORM TRANSFORMER AND/OR A CONSTANT OIL PRESERVATION SYSTEM IS PROVIDED, THE DIMENSIONAL REQUIREMENTS IDENTIFIED MUST BE MET. THE COPS TANK MUST MAINTAIN A MINIMUM OF 105" CLEARANCE FROM THE OVERHEAD 500KV CONDUCTORS PER IEEE STD 1427. THERE SHALL BE NO MODIFICATIONS TO THE POWERHOUSE EQUIPMENT NEEDED TO FIT THE COPS TANK. IF CONSTANT OIL PRESERVATION SYSTEM IS PROVIDED, ALL ASSOCIATED EQUIPMENT REQUIRED IN SECTION 48 19 23.04 26 FOR A CONSTANT OIL PRESERVATION SYSTEM MUST BE INCLUDED, SUCH AS A MAINTENACE-FREE DEHYDRATING BREATHER, AND BUCHHOLZ RELAY.

3. THE RADIATORS AS DEPICTED INDICATE THE PERMISSIBLE LOCATIONS, AND ARE NOT INTENDED TO INDICATE THE ACTUAL QUANTITY.

4. MAXIMUM WEIGHT: 352,000 POUNDS

5. SEE RESOURCE DRAWINGS FOR PAD DETAILS

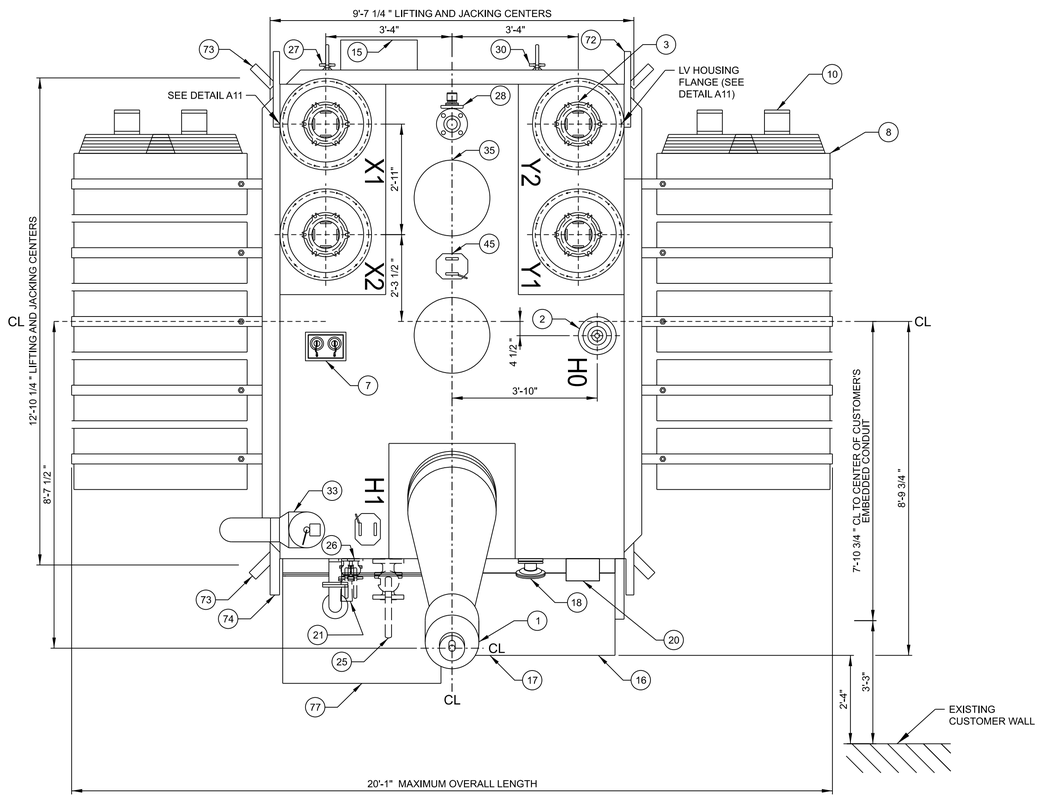

A2 TRANSFORMER PLAN VIEW - COVER
SCALE: 1/2"=1'-0"

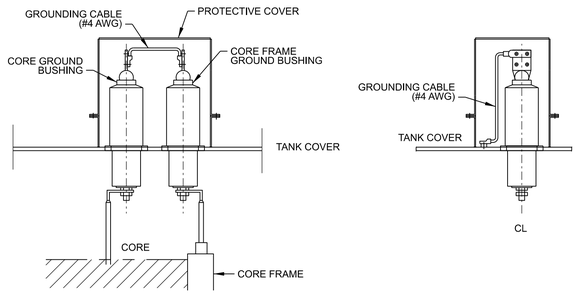

F15 CORE AND CORE FRAME GROUNDING
SCALE: NTS

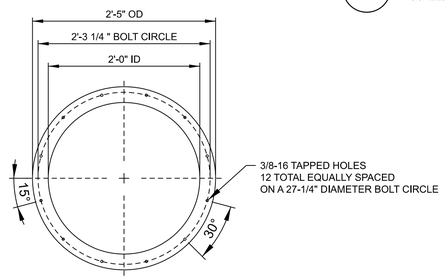

A11 LOW-VOLTAGE BUSHING HOUSING FLANGE DETAILS
SCALE: NTS

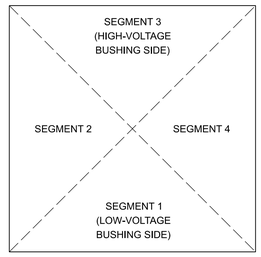

A16 TRANSFORMER TANK SEGMENT IDENTIFICATION (TOP VIEW)
SCALE: NTS

US Army Corps of Engineers®

MARK	DESCRIPTION	DATE
	MARCH 2025	

ISSUE DATE: OCTOBER 2025
SOLICITATION NO.: W912EF26RA003
CONTRACT NO.:
FILE NUMBER: LGP-1-6-1A401
DESIGNED BY: P. KLEINE, P.E.
DRAWN BY: M. GUNDRUM
CHECKED BY: S. COTNER, P.E.
SUBMITTED BY: JORDAN S. PINK, P.E.
ANSI D
FILE NAME: LG503118_E-101.dgn

U.S. ARMY CORPS OF ENGINEERS
WALLA WALLA DISTRICT
201 N 3RD AVE
WALLA WALLA, WASHINGTON

US ARMY CORPS OF ENGINEERS
HYDROELECTRIC DESIGN CENTER
333 SW 1ST AVE
PORTLAND, OREGON

LITTLE GOOSE LOCK AND DAM
LOWER SNAKE RIVER SPARE TRANSFORMERS
T2

GSU TRANSFORMER
LAYOUT AND LIMITING DIMENSIONS
COVER, INSTALL

SHEET ID
VOLUME 2
E-101

FINAL

DS: LG503118_E-101.dgn
PD: 9:50:12 AM 9/19/2025

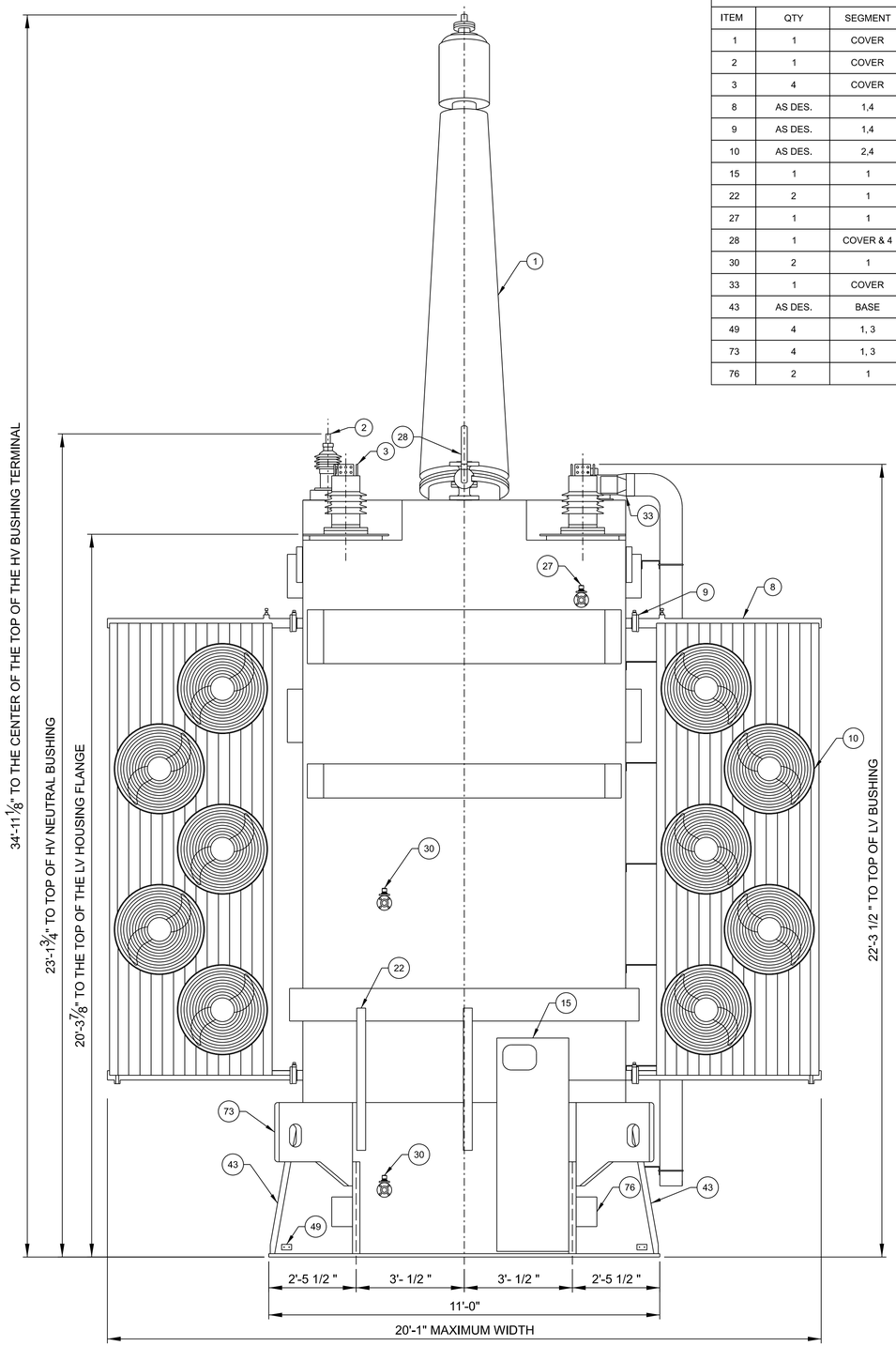

3 TRANSFORMER ELEVATION VIEW - SEGMENT 1

SCALE: 1/2"=1'-0"

BILL OF MATERIALS

ITEM	QTY	SEGMENT	DESCRIPTION	EXAMPLE	MODEL NUMBER
1	1	COVER	HIGH-VOLTAGE (H1) BUSHING	ABB-HITACHI	TYPE O+ C BUSHING T550W2000VV
2	1	COVER	HIGH-VOLTAGE NEUTRAL (H0) BUSHING	ABB-HITACHI	TYPE O+ C BUSHING T025W0412AT
3	4	COVER	LOW-VOLTAGE BUSHINGS	ABB-HITACHI	TYPE RJ BUSHING T025B0750EC
8	AS DES.	1,4	RADIATORS (TYPICAL)		
9	AS DES.	1,4	RADIATOR ISOLATION VALVES (TYPICAL)		
10	AS DES.	2,4	HORIZONTAL DRAFT COOLING FAN (TYPICAL)	KRENZ-VENT	
15	1	1	DUAL TANK NITROGEN REGULATOR CABINET	ABB	RND2
22	2	1	MOUNTING BRACKETS FOR FUTURE ON-LINE DGA		
27	1	1	1.5-INCH UPPER FILTER VALVE	MILWAUKEE VALVE	F20SS, CLASS 150
28	1	COVER & 4	3-INCH VACUUM VALVE	MILWAUKEE VALVE	F20SS, CLASS 150
30	2	1	2-INCH GAS-IN-OIL MONITOR INTERFACE VALVES	MILWAUKEE VALVE	F20SS, CLASS 150
33	1	COVER	PRESSURE RELIEF DEVICE WITH DISCHARGE PIPING		
43	AS DES.	BASE	STRUCTURAL BASE		
49	4	1, 3	GROUNDING PADS (TYPICAL)		
73	4	1, 3	COMBINATION JACKING PAD, PULLING EYE AND LIFTING EYES		
76	2	1	COMBINATION ROCKER AND JACKING PADS		

GENERAL NOTES

1. THE TRANSFORMER LAYOUT AND LIMITING DIMENSIONS HAVE BEEN PROVIDED FOR THE MANUFACTURER'S USE IN DESIGNING THE TRANSFORMER FOR PROPER INTERCONNECTION TO THE EXISTING EQUIPMENT AND INTERFACES IN THE TRANSFORMER VAULT. THE LOCATIONS OF THE FOLLOWING TRANSFORMER EQUIPMENT ARE CONSIDERED CRITICAL TO ASSURE PROPER INTERCONNECTION:
   A. HIGH-VOLTAGE BUSHING LOCATION AND TERMINAL CONNECTION
   B. HIGH-VOLTAGE NEUTRAL BUSHING LOCATION AND TERMINAL CONNECTION
   C. LOW-VOLTAGE BUSHINGS LOCATIONS AND TERMINAL CONNECTIONS
   D. LOW VOLTAGE BUSHING HOUSING FLANGE DIMENSIONS AND LOCATION
   E. CONTROL AND POWER CABINETS
   F. ANCILLARY DEVICES
   G. JACKING & LIFTING FACILITIES
   H. STRUCTURAL BASE
   I. MAXIMUM OVERALL WIDTH
2. THE DRAWING SHOWN IS BASED ON THE WESTINGHOUSE SHELL-FORM DRAWINGS WITH AN INERT-GAS OIL PRESERVATION SYSTEM. IF A CORE-FORM TRANSFORMER AND/OR A CONSTANT OIL PRESERVATION SYSTEM IS PROVIDED, THE DIMENSIONAL REQUIREMENTS IDENTIFIED MUST BE MET. THE COPS TANK MUST MAINTAIN A MINIMUM OF 105" CLEARANCE FROM THE OVERHEAD 500KV CONDUCTORS PER IEEE STD 1427. THERE SHALL BE NO MODIFICATIONS TO THE POWERHOUSE EQUIPMENT NEEDED TO FIT THE COPS TANK. IF CONSTANT OIL PRESERVATION SYSTEM IS PROVIDED, ALL ASSOCIATED EQUIPMENT REQUIRED IN SECTION 48 19 23.04 26 FOR A CONSTANT OIL PRESERVATION SYSTEM MUST BE INCLUDED, SUCH AS A MAINTENACE-FREE DEHYDRATING BREATHER, AND BUCHHOLZ RELAY.
3. THE RADIATORS AS DEPICTED INDICATE THE PERMISSIBLE LOCATIONS, AND ARE NOT INTENDED TO INDICATE THE ACTUAL QUANTITY.
4. MAXIMUM WEIGHT: 352,000 POUNDS
5. SEE RESOURCE DRAWINGS FOR PAD DETAILS.

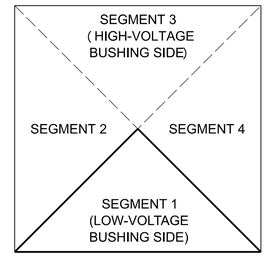

A17 TRANSFORMER TANK SEGMENT IDENTIFICATION (TOP VIEW)

SCALE: NTS

US Army Corps of Engineers®

MARK	DESCRIPTION	DATE
MARCH 2025		

ISSUE DATE: OCTOBER 2025
SOLICITATION NO.: W912EF26RA003
CONTRACT NO.:
FILE NUMBER: LGP-1-04-1A002
LG503118_E-102.dgn

DESIGNED BY: P. KLEINE, P.E.
DRAWN BY: M. GUNDRUM
CHECKED BY: S. COTNER, P.E.
SUBMITTED BY: JORDAN S. PINK, P.E.
SIZE: ANSI D
FILE NAME: LG503118_E-102.dgn

U.S. ARMY CORPS OF ENGINEERS
WALLA WALLA DISTRICT
201 N 3RD AVE
WALLA WALLA, WASHINGTON

US ARMY CORPS OF ENGINEERS
HYDROELECTRIC DESIGN CENTER
333 SW 1ST AVE
PORTLAND, OREGON

LITTLE GOOSE LOCK AND DAM
LOWER SNAKE RIVER SPARE TRANSFORMERS
T2

GSU TRANSFORMER
LAYOUT AND LIMITING DIMENSIONS
SEGMENT 1, INSTALL

SHEET ID
VOLUME 2
E-102

FINAL

PD: 9:50:17 AM 9/19/2025

DS: LG503118_E-102.dgn

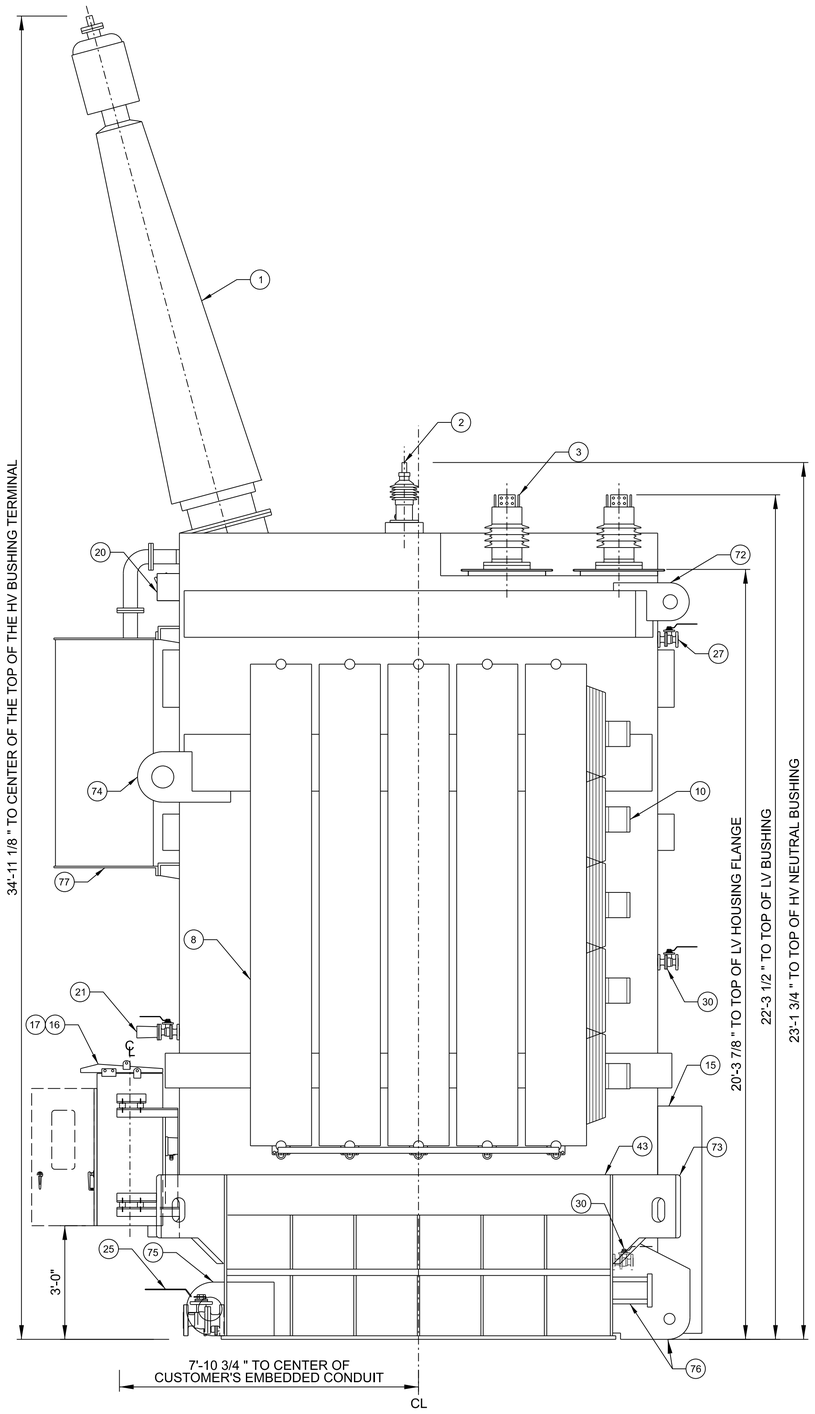

A2 TRANSFORMER ELEVATION - SEGMENT 2
SCALE: 1/2"=1'-0"

GENERAL NOTES

1. THE TRANSFORMER LAYOUT AND LIMITING DIMENSIONS HAVE BEEN PROVIDED FOR THE MANUFACTURER'S USE IN DESIGNING THE TRANSFORMERS FOR PROPER INTERCONNECTION TO THE EXISTING EQUIPMENT AND INTERFACES IN THE TRANSFORMER VAULT. THE LOCATIONS OF THE FOLLOWING TRANSFORMER EQUIPMENT ARE CONSIDERED CRITICAL TO ASSURE PROPER INTERCONNECTION:
   A. HIGH-VOLTAGE BUSHING LOCATION AND TERMINAL CONNECTION
   B. LOW-VOLTAGE BUSHING LOCATIONS AND TERMINAL CONNECTIONS
   C. HIGH-VOLTAGE NEUTRAL BUSHING LOCATION AND TERMINAL CONNECTION
   D. LOW-VOLTAGE BUSHING HOUSINGS FLANGE LOCATION AND DIMENSIONS
   E. CONTROL AND POWER CABINETS
   F. ANCILLARY DEVICES
   G. JACKING & LIFTING FACILITIES
   H. STRUCTURAL BASE
   H. MAXIMUM OVERALL LENGTH
   I. LOCATION OF EXISTING EMBEDDED CONDUIT COMPARED TO THE CONTROL AND POWER CABINET
2. THE DRAWING SHOWN IS BASED ON THE WESTINGHOUSE SHELL-FORM DRAWINGS WITH AN INERT-GAS OIL PRESERVATION SYSTEM. IF A CORE-FORM TRANSFORMER AND/OR A CONSTANT OIL PRESERVATION SYSTEM IS PROVIDED, THE DIMENSIONAL REQUIREMENTS IDENTIFIED MUST BE MET. THE COPS TANK MUST MAINTAIN A MINIMUM OF 105" CLEARANCE FROM THE OVERHEAD 500KV CONDUCTORS PER IEEE STD 1427. THERE SHALL BE NO MODIFICATIONS TO THE POWERHOUSE EQUIPMENT NEEDED TO FIT THE COPS TANK. IF CONSTANT OIL PRESERVATION SYSTEM IS PROVIDED, ALL ASSOCIATED EQUIPMENT REQUIRED IN SECTION 48 19 23.04 26 FOR A CONSTANT OIL PRESERVATION SYSTEM MUST BE INCLUDED. SUCH AS A MAINTENACE-FREE DEHYDRATING BREATHER, AND BUCHHOLZ RELAY.
3. THE RADIATORS AS DEPICTED INDICATE THE PERMISSIBLE LOCATIONS, AND ARE NOT INTENDED TO INDICATE THE ACTUAL QUANTITY.
4. MAXIMUM WEIGHT: 352,000 POUNDS
5. SEE RESOURCE DRAWINGS FOR PAD DETAILS

BILL OF MATERIALS

ITEM	QTY	SEGMENT	DESCRIPTION	EXAMPLE	MODEL NUMBER
1	1	COVER	HIGH-VOLTAGE (H1) BUSHING	ABB-HITACHI	TYPE O+ C BUSHING T550W2000VV
2	1	COVER	HIGH-VOLTAGE NEUTRAL (H0) BUSHING	ABB-HITACHI	TYPE O+ C BUSHING T025W0412AT
3	4	COVER	LOW-VOLTAGE BUSHINGS	ABB-HITACHI	TYPE RJ BUSHING T025B0750EC
8	AS DES	2,4	RADIATORS (TYPICAL)		
10	AS DES	COVER	HORIZONTAL DRAFT COOLING FANS (TYPICAL)	KRENZ-VENT	
15	1	1	DUAL TANK NITROGEN REGULATOR CABINET	ABB	RND2
16	1	3	CONTROL CABINET		
17	1	3	POWER CABINET		
20	5	3	THERMOWELLS (QTY 3 - STANDARD, QTY 2 - HEATED)		
21	1	3	RAPID PRESSURE RISE RELAY	QUALITROL	900-003-01
25	1	3	3-INCH DRAIN VALVE	MILWAUKEE VALVE	F20SS, CLASS 150
27	1	1	1.5-INCH UPPER FILTER VALVE	MILWAUKEE VALVE	F20SS, CLASS 150
30	2	3	2-INCH DISSOLVED GAS-IN-OIL MONITOR INTERFACE VALVES	MILWAUKEE VALVE	F20SS, CLASS 150
43	AS DES	BASE	STRUCTURAL BASE		
72	2	1	STABALIZING EYES		
73	4	1, 3	COMBINATION JACKING PAD, PULLING EYE, AND LIFTING EYES		
74	2	3	COMBINATION UPRIGHTING AND LIFTING EYES FOR UPRIGHTING AND LIFTING COMPLETE UNIT		
75	2	3	HORIZONTAL LIFTING EYES FOR LIFTING COMPLETE UNIT WHEN IN HORIZONTAL POSITION		
76	2	1	COMBINATION ROCKER AND JACKING PADS FOR UPRIGHTING AND JACKING THE COMPLETE UNIT		
77	1	3	EXTERNAL GAS EXPANSION TANK		

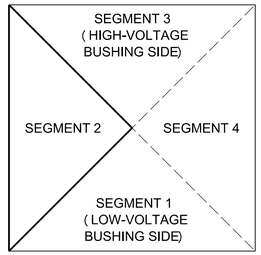

A13 FIGURE 1 - TRANSFORMER TANK SEGMENT IDENTIFICATION (TOP VIEW)
SCALE: NTS

US Army Corps of Engineers®

MARK	DESCRIPTION	DATE

DESIGNED BY: P. KLEINE, P.E.
DRAWN BY: M. GUNDRUM
CHECKED BY: S. COTNER, P.E.
SUBMITTED BY: JORDAN S. FINNAMORE, P.E.
ANSI D
ISSUE DATE: OCTOBER 2025
SOLICITATION NO.: W912EF26RA003
CONTRACT NO.:
FILE NUMBER: LGP-1-04-1A003
SIZE: FILENAME: LG503118_E-103.dgn

U.S. ARMY CORPS OF ENGINEERS
WALLA WALLA DISTRICT
201 N 3RD AVE
WALLA WALLA, WASHINGTON

US ARMY CORPS OF ENGINEERS
HYDROELECTRIC DESIGN CENTER
333 SW 1ST AVE
PORTLAND, OREGON

LITTLE GOOSE LOCK AND DAM
LOWER SNAKE RIVER SPARE TRANSFORMERS
T2

GSU TRANSFORMER
LAYOUT AND LIMITING DIMENSIONS
SEGMENT 2, INSTALL

SHEET ID
VOLUME 2
E-103

FINAL

DS: LG503118_E-103.dgn
PD: 9:50:22 AM 9/19/2025

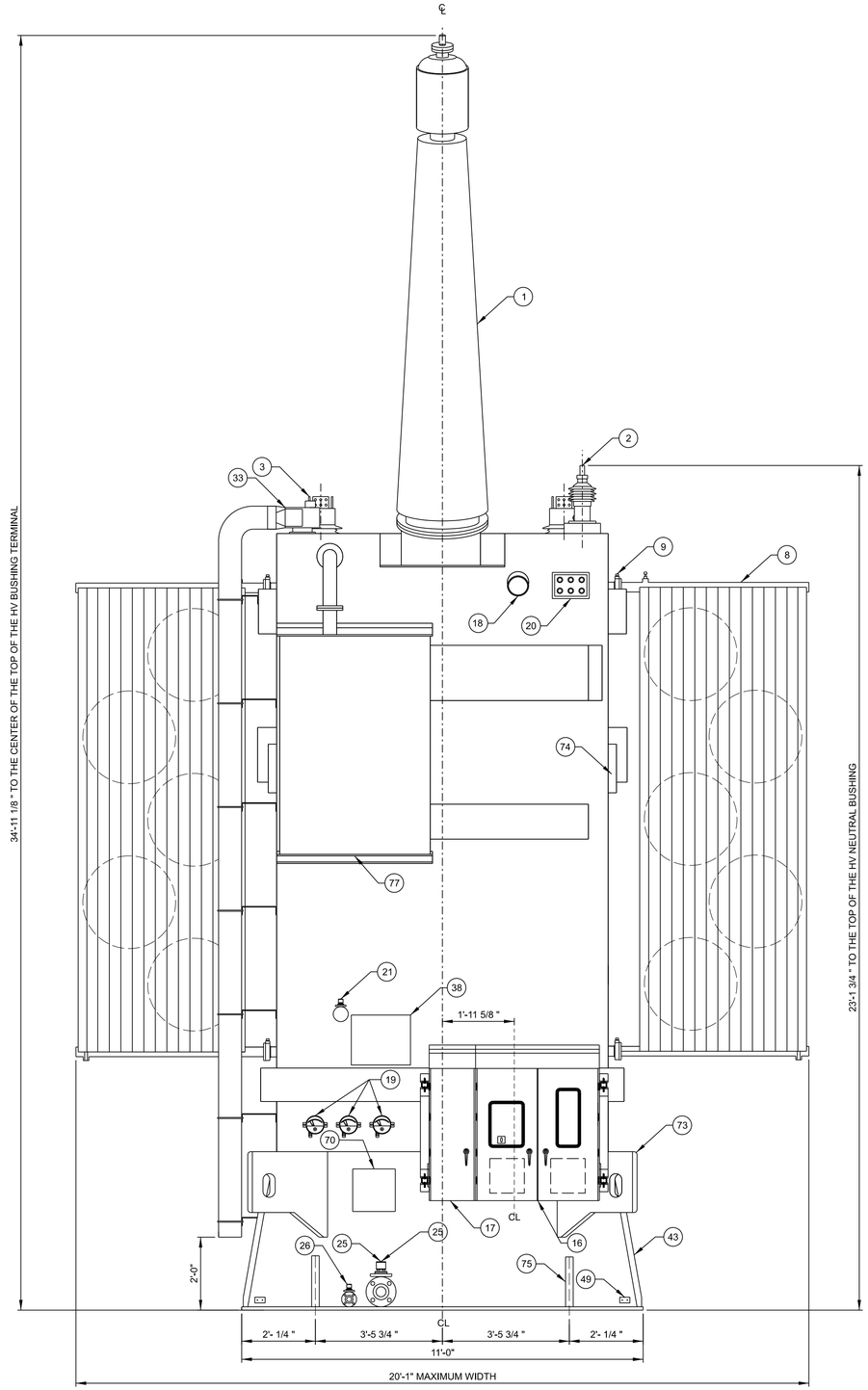

A2 TRANSFORMER ELEVATION VIEW - SEGMENT 3

SCALE: 1/2"=1'-0"

GENERAL NOTES

1. THE TRANSFORMER LAYOUT AND LIMITING DIMENSIONS HAVE BEEN PROVIDED FOR THE MANUFACTURER'S USE IN DESIGNING THE TRANSFORMER FOR PROPER INTERCONNECTION TO THE EXISTING EQUIPMENT AND INTERFACES IN THE TRANSFORMER VAULT. THE LOCATIONS OF THE FOLLOWING TRANSFORMER EQUIPMENT ARE CONSIDERED CRITICAL TO ASSURE PROPER INTERCONNECTION:

   A. HIGH-VOLTAGE BUSHING LOCATION AND TERMINAL CONNECTION
   B. LOW-VOLTAGE BUSHING LOCATIONS AND TERMINAL CONNECTIONS
   C. HIGH-VOLTAGE NEUTRAL BUSHING LOCATION AND TERMINAL CONNECTION
   D. LOW-VOLTAGE BUSHING HOUSING DIMENSIONS AND LOCATION OF LOW VOLTAGE BUS
   E. CONTROL AND POWER CABINETS
   F. ANCILLARY DEVICES
   G. JACKING FACILITIES
   H. STRUCTURAL BASE INCLUDING WIDTH
   I. MAXIMUM OVERAL WIDTH

2. THE DRAWING SHOWN IS BASED ON THE WESTINGHOUSE SHELL-FORM DRAWINGS WITH AN INERT-GAS OIL PRESERVATION SYSTEM. IF A CORE-FORM TRANSFORMER AND/OR A CONSTANT OIL PRESERVATION SYSTEM IS PROVIDED, THE DIMENSIONAL REQUIREMENTS IDENTIFIED MUST BE MET. THE COPS TANK MUST MAINTAIN A MINIMUM OF 105" CLEARANCE FROM THE OVERHEAD 500KV CONDUCTORS PER IEEE STD 1427. THERE SHALL BE NO MODIFICATIONS TO THE POWERHOUSE EQUIPMENT NEEDED TO FIT THE COPS TANK. IF CONSTANT OIL PRESERVATION SYSTEM IS PROVIDED, ALL ASSOCIATED EQUIPMENT REQUIRED IN SECTION 48 19 23.08 26 FOR A CONSTANT OIL PRESERVATION SYSTEM MUST BE INCLUDED, SUCH AS A MAINTENACE-FREE DEHYDRATING BREATHER, AND BUCHHOLZ RELAY.

3. THE RADIATORS AS DEPICTED INDICATE THE PERMISSIBLE LOCATIONS, AND ARE NOT INTENDED TO INDICATE THE ACTUAL QUANTITY.

4. MAXIMUM WEIGHT: 352,000 POUNDS

5. SEE RESOURCE DRAWINGS FOR THE MOUNTING PAD DETAILS

BILL OF MATERIALS

ITEM	QTY	SEGMENT	DESCRIPTION	EXAMPLE	MODEL NUMBER
1	1	COVER	HIGH-VOLTAGE (H1) BUSHING	ABB-HITACHI	TYPE O+ C BUSHING T550W2000VV
2	1	COVER	HIGH-VOLTAGE NEUTRAL (H0) BUSHING	ABB-HITACHI	TYPE O+ C BUSHING T025W0412AT
3	4	COVER	LOW-VOLTAGE BUSHINGS	ABB-HITACHI	TYPE RJ BUSHING T025B0750EC
8	AS DES.	2,4	RADIATORS (TYPICAL)		
9	AS DES.	2,4	RADIATOR ISOLATION VALVES (TYPICAL)		
16	1	3	CONTROL CABINET		
17	1	3	POWER CABINET		
18	1	3	OIL LEVEL INDICATOR	QUALITROL	SERIES 042
19	3	3	ANALOG TEMPERATURE GAUGES	QUALITROL	
20	5	3	THERMOWELLS (QTY. 3 - STANDARD, QTY. 2 - HEATED)		
21	1	3	RAPID PRESSURE RISE RELAY	QUALITROL	900-003-01
25	1	3	3-INCH MAIN OIL DRAIN VALVE	MILWAUKEE VALVE	F20SS, CLASS 150
26	1	3	1.5-INCH LOWER FILTER VALVE	MILWAUKEE VALVE	F20SS, CLASS 150
33	1	4, COVER	PRESSURE RELIEF DEVICE WITH DISCHARGE PIPING	MILWAUKEE VALVE	XPRD
38	1	3	TRANSFORMER NAMEPLATE		
43	AS DES.	BASE	SKID-TYPE STRUCTURAL BASE		
49	4	1, 3	GROUNDING PADS (TYPICAL)		
70	1	3	AUXILIARY POWER TRANSFORMER		
73	4	1, 3	COMBINATION JACKING PAD, PULLING EYE AND LIFTING EYES		
74	2	3	COMBINATION UPRIGHTING AND LIFTING EYES FOR UPRIGHTING AND LIFTING COMPLETE UNIT		
75	2	3	HORIZONTAL LIFTING EYES FOR LIFTING COMPLETE UNIT WHEN IN HORIZONTAL POSITION		
77	1	3	EXTERNAL GAS EXPANSION TANK		

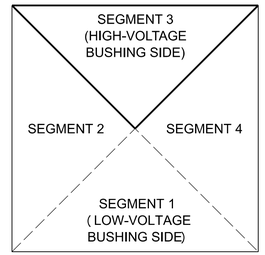

A16 FIGURE 1 - TRANSFORMER TANK SEGMENT IDENTIFICATION (TOP VIEW)

SCALE: NTS

US Army Corps of Engineers®

MARK	DESCRIPTION	DATE

DESIGNED BY: P. KLEINE, P.E.
DRAWN BY: M. GUNDRUM
CHECKED BY: S. COTNER, P.E.
SUBMITTED BY: JORDAN S. FINK, P.E.
SIZE: ANSI D
ISSUE DATE: OCTOBER 2025
SOLICITATION NO.: W912EF26RA003
CONTRACT NO.:
FILE NUMBER: LGP-1-04-1A0/4
FILE NAME: LG503118_E-104.dgn

U.S. ARMY CORPS OF ENGINEERS
WALLA WALLA DISTRICT
201 N 3RD AVE
WALLA WALLA, WASHINGTON

US ARMY CORPS OF ENGINEERS
HYDROELECTRIC DESIGN CENTER
333 SW 1ST AVE
PORTLAND, OREGON

LITTLE GOOSE LOCK AND DAM
LOWER SNAKE RIVER SPARE TRANSFORMERS
T2

GSU TRANSFORMER
LAYOUT AND LIMITING DIMENSIONS
SEGMENT 3, INSTALL

SHEET ID
VOLUME 2
E-104

FINAL

DS: LG503118_E-104.dgn
PD: 9:50:27 AM 9/19/2025

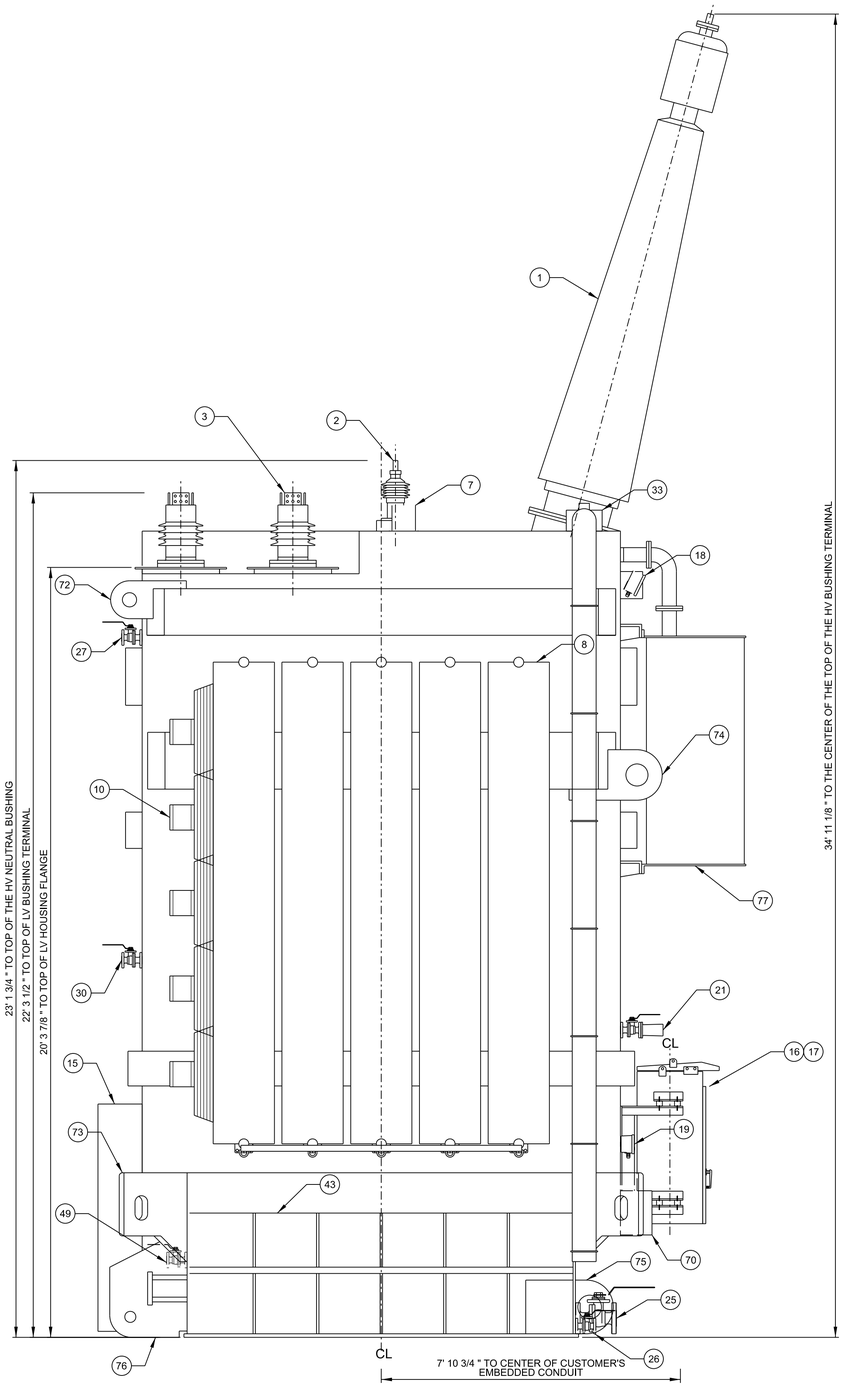

A1 TRANSFORMER ELEVATION VIEW - SEGMENT 4

SCALE: 1/2"=1'-0"

GENERAL NOTES

1. THE TRANSFORMER LAYOUT AND LIMITING DIMENSIONS HAVE BEEN PROVIDED FOR THE MANUFACTURER'S USE IN DESIGNING THE TRANSFORMER FOR PROPER INTERCONNECTION TO THE EXISTING EQUIPMENT AND INTERFACES IN THE TRANSFORMER VAULT. THE LOCATIONS OF THE FOLLOWING TRANSFORMER EQUIPMENT ARE CONSIDERED CRITICAL TO ASSURE PROPER INTERCONNECTION:

   A. HIGH-VOLTAGE BUSHING LOCATION AND TERMINAL CONNECTION
   B. HIGH-VOLTAGE NEUTRAL BUSHING LOCATION AND TERMINAL CONNECTION
   C. LOW-VOLTAGE BUSHINGS LOCATIONS AND TERMINAL CONNECTIONS
   D. LOW VOLTAGE BUSHING HOUSING FLANGE DIMENSIONS AND LOCATION
   E. CONTROL AND POWER CABINETS
   F. ANCILLARY DEVICES
   G. JACKING & LIFTING FACILITIES
   H. STRUCTURAL BASE
   I. MAXIMUM OVERALL LENGTH
   J. LOCATION OF EMBEDDED CONDUIT

2. THE DRAWING SHOWN IS BASED ON THE WESTINGHOUSE SHELL-FORM DRAWINGS WITH AN INERT-GAS OIL PRESERVATION SYSTEM. IF A CORE-FORM TRANSFORMER AND/OR A CONSTANT OIL PRESERVATION SYSTEM IS PROVIDED, THE DIMENSIONAL REQUIREMENTS IDENTIFIED MUST BE MET. THE COPS TANK MUST MAINTAIN A MINIMUM OF 105" CLEARANCE FROM THE OVERHEAD 500KV CONDUCTORS PER IEEE STD 1427. THERE SHALL BE NO MODIFICATIONS TO THE POWERHOUSE EQUIPMENT NEEDED TO FIT THE COPS TANK. IF CONSTANT OIL PRESERVATION SYSTEM IS PROVIDED, ALL ASSOCIATED EQUIPMENT REQUIRED IN SECTION 48 19 23.04 26 FOR A CONSTANT OIL PRESERVATION SYSTEM MUST BE INCLUDED, SUCH AS A MAINTENACE-FREE DEHYDRATING BREATHER, AND BUCHHOLZ RELAY.

3. THE RADIATORS AS DEPICTED INDICATE THE PERMISSIBLE LOCATIONS, AND ARE NOT INTENDED TO INDICATE THE ACTUAL QUANTITY.

4. MAXIMUM WEIGHT: 352,000 POUNDS

5. SEE RESOURCE DRAWINGS FOR PAD DETAILS.

BILL OF MATERIALS

ITEM	QTY	SEGMENT	DESCRIPTION	EXAMPLE	MODEL NUMBER
1	1	COVER	HIGH-VOLTAGE (H1) BUSHING	ABB-HITACHI	TYPE O+ C BUSHING T550W2000VV
2	1	COVER	HIGH-VOLTAGE NEUTRAL (H0) BUSHING	ABB-HITACHI	TYPE O+ C BUSHING T025W0412AT
3	4	COVER	LOW-VOLTAGE BUSHINGS	ABB-HITACHI	TYPE RJ BUSHING T025B0750EC
7	AS DES.	COVER	CORE & CORE FRAME GROUND BUSHINGS		
8	AS DES.	2,4	RADIATORS (TYPICAL)		
10	AS DES.	COVER	HORIZONTAL DRAFT COOLING FANS (TYPICAL)	KRENZ-VENT	
15	1	1	DUAL TANK NITROGEN REGULATOR CABINET	ABB	RND2
16	1	3	CONTROL CABINET		
17	1	3	POWER CABINET		
18	1	3	OIL LEVEL INDICATOR	QUALITROL	SERIES 042
19	1	3	ANALOG TEMPERATURE GAUGES	QUALITROL	TR6000 SERIES
21	1	3	RAPID PRESSURE RISE RELAY	QUALITROL	900-003-01
25	1	3	3-INCH MAIN OIL DRAIN VALVE	MILWAUKEE VALVE	F20SS, CLASS 150
26	1	3	2-INCH DISSOLVED GAS-IN-OIL MONITOR INTERFACE VALVE	MILWAUKEE VALVE	F20SS, CLASS 150
27	1	1	1.5-INCH LOWER FILTER VALVE	MILWAUKEE VALVE	F20SS, CLASS 150
30	2	3	2-INCH DISSOLVED GAS-IN-OIL MONITOR INTERFACE VALVES	MILWAUKEE VALVE	F20SS, CLASS 150
33	1	4,COVER	PRESSURE RELIEF DEVICE WITH DISCHARGE PIPING	QUALITROL	XPRD
43	AS DES.	BASE	STRUCTURAL BASE		
49	4	2,4	GROUNDING PAD (TYPICAL)		
70	1	3	AUXILIARY POWER TRANSFORMER		
72	2	1	STABILIZING EYES		
73	4	1, 3	COMBINATION JACKING PAD, PULLING EYE, AND LIFTING EYES		
74	2	3	COMBINATION UPRIGHTING AND LIFTING EYES FOR UPRIGHTING AND LIFTING COMPLETE UNIT		
75	2	3	HORIZONTAL LIFTING EYES FOR LIFTING COMPLETE UNIT WHEN IN HORIZONTAL POSITION		
76	2	1	COMBINATION ROCKER AND JACKING PADS FOR UPRIGHTING AND JACKING COMPLETE UNIT		
77	1	3	EXTERNAL GAS EXPANSION TANK		

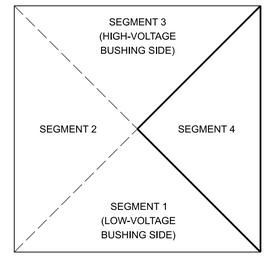

A16 FIGURE 1 - TRANSFORMER TANK SEGMENT IDENTIFICATION (TOP VIEW)

SCALE: NTS

US Army Corps of Engineers®

MARK	DESCRIPTION	DATE

DESIGNED BY: P. KLEINE, P.E.
DRAWN BY: M. GUNDRUM
CHECKED BY: S. COTNER, P.E.
SUBMITTED BY: JORDAN S. FINK, P.E.
ISSUE DATE: OCTOBER 2025
SOLICITATION NO.: W912EF26RA003
CONTRACT NO.:
FILE NUMBER: LGP-14-1A005
FILENAME: LG503118_E-105.dgn

U.S. ARMY CORPS OF ENGINEERS
WALLA WALLA DISTRICT
201 N 3RD AVE
WALLA WALLA, WASHINGTON

US ARMY CORPS OF ENGINEERS
HYDROELECTRIC DESIGN CENTER
333 SW 1ST AVE
PORTLAND, OREGON

LITTLE GOOSE LOCK AND DAM
LOWER SNAKE RIVER SPARE TRANSFORMERS
T2

GSU TRANSFORMER
LAYOUT AND LIMITING DIMENSIONS
SEGMENT 4, INSTALL

SHEET ID
VOLUME 2
E-105

FINAL

DS: LG503118_E-105.dgn
PD: 9:50:31 AM 9/19/2025

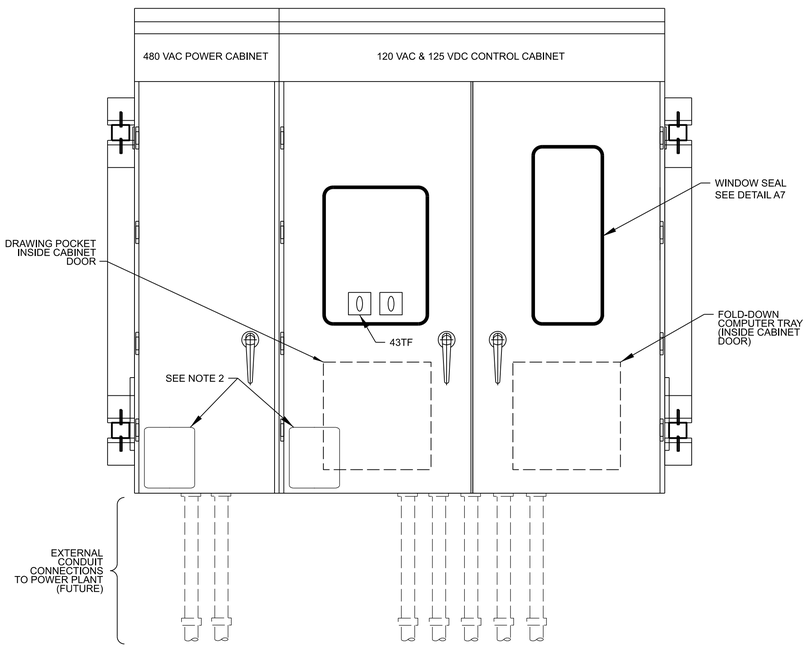

G1 CONTROL AND POWER CABINETS FRONT VIEW
SCALE: NTS

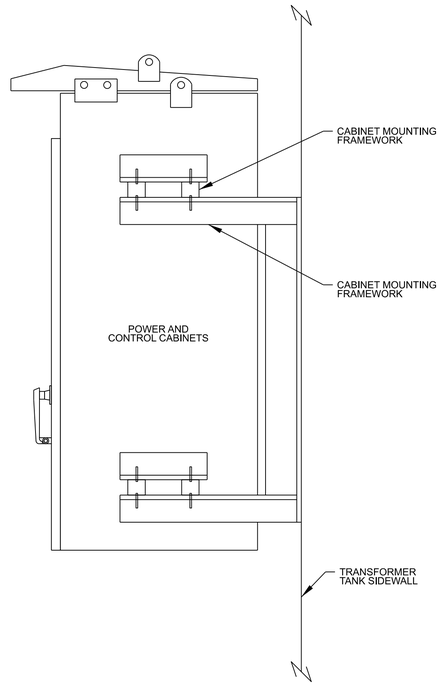

G8 CONTROL AND POWER CABINETS SIDE VIEW
SCALE: NTS

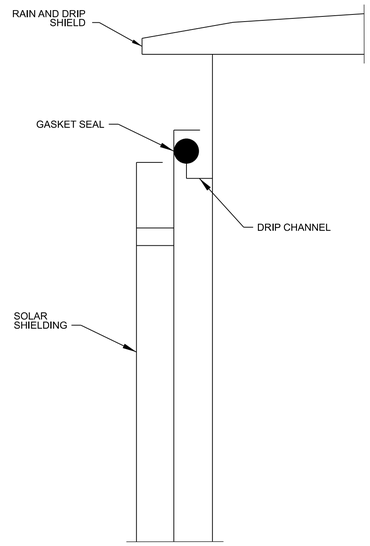

G15 TYPICAL CABINET DOOR SEAL
SCALE: NTS

GENERAL NOTES

1. THE TRANSFORMER CONTROL AND POWER CABINETS ARE TO BE DESIGNED AND BUILT IN ACCORDANCE WITH UL 508A STANDARD.
2. SPACE FOR ARC FLASH LABEL (PROVIDED BY THE GOVERNMENT).
3. EXTERNAL CONDUIT CONNECTIONS TO THE POWER PLANT ARE SHOWN FOR REPRESENTATIVE PURPOSES ONLY. THE BASE OF EACH CABINET IS TO HAVE GASKETED REMOVABLE PLATES FOR THE PURPOSES OF FUTURE FIELD FITTING OF CONDUIT.
4. ALL CONDUIT ROUTING FROM THE TRANSFORMER DEVICES TO THE CONTROL AND POWER CABINETS SHALL ONLY ENTER EACH CABINET THROUGH THE BASE.
5. THE CONTROL AND POWER CABINETS ARE TO BE MOUNTED TO A FRAME STRUCTURE USING VIBRATION ISOLATORS.
6. THE RIGHT DOOR IS TO HAVE A DROP DOWN LAPTOP TRAY MOUNTED ON THE INSIDE OF THE DOOR. THE TRAY IS TO INCLUDE FOLDING HINGES WHICH SECURE THE TRAY IN A HORIZONTAL POSITION WHEN LOWERED, AND A MEANS FOR LATCHING THE TRAY WHEN STOWED. THE LEFT DOOR IS TO HAVE A POCKET SIZED TO HOLD THE O&M MANUAL DRAWINGS.
7. THE LEFT CONTROL CABINET DOOR IS TO HAVE A TEMPERED GLASS WINDOW WITH A WEATHERPROOF SEAL FOR VIEWING OF A FUTURE INSTALLED ELECTRONIC TEMPERATURE MONITOR AND COOLING CONTROL SYSTEM DISPLAY.
8. THE RIGHT CONTROL CABINET DOOR IS TO HAVE A TEMPERED GLASS WINDOW WITH A WEATHERPROOF SEAL FOR VIEWING OF A FUTURE INSTALLED ANNUNCIATOR DISPLAY.

LEGEND

43TF	COOLING GROUP ON-OFF-AUTO SELECTOR SWITCH

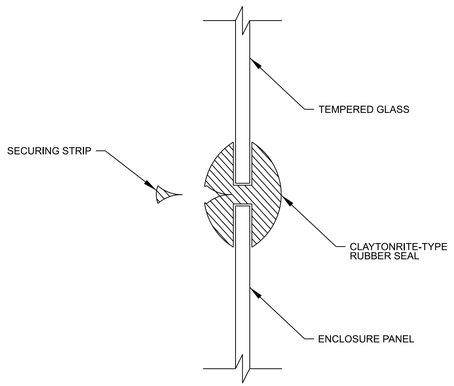

A8 TYPICAL CLAYTONRITE-TYPE WINDOWS SEAL
SCALE: NTS

US Army Corps of Engineers®

MARK	DESCRIPTION	DATE

DESIGNED BY: P. KLEINE, P.E.
DRAWN BY: M. GUNDRUM
CHECKED BY: S. COTNER, P.E.
SUBMITTED BY: JORDAN S. FINK, P.E.
SIZE: ANSI D
FILE NUMBER: LGP-1-6-1A006
FILENAME: LG503118_E-106.dgn
ISSUE DATE: OCTOBER 2025
SOLICITATION NO.: W912EF26RA003
CONTRACT NO.:

U.S. ARMY CORPS OF ENGINEERS
WALLA WALLA DISTRICT
201 N 3RD AVE
WALLA WALLA, WASHINGTON

US ARMY CORPS OF ENGINEERS
HYDROELECTRIC DESIGN CENTER
333 SW 1ST AVE
PORTLAND, OREGON

LITTLE GOOSE LOCK AND DAM
LOWER SNAKE RIVER SPARE TRANSFORMERS
T2

POWER AND CONTROL CABINETS

INSTALL

SHEET ID
VOLUME 2
E-106

FINAL

LG503118_E-106.dgn
DS:
PD:
9:50:36 AM 9/19/2025

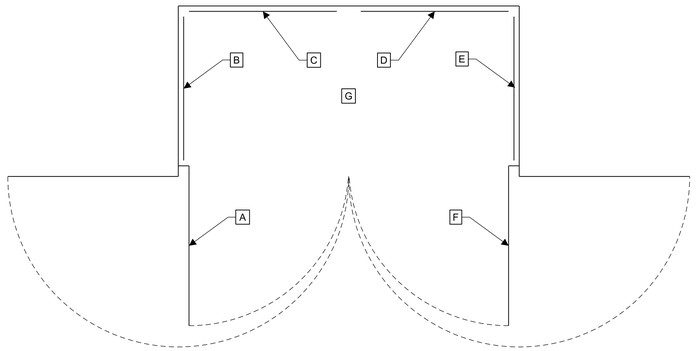

K2 CONTROL CABINET TOP VIEW

SCALE: NTS

BILL OF MATERIALS - CONTROL CABINET COMPONENTS

ITEM	QTY	DESCRIPTION	EXAMPLE	MODEL NUMBER
50	-	ELECTRONIC COOLING CONTROL (FUTURE)	QUALITROL	QTMS
51	-	LOCAL ANNUNCIATOR PANEL (FUTURE)	SEL	2533
52	AS REQ'D	MOLDED-CASE CIRCUIT BREAKERS	SQUARE D	FAL
53	AS REQ'D	AUXILIARY RELAYS	SQUARE D	8501, TYPE X
54	AS REQ'D	TIME DELAY RELAY	AGASTAT	SERIES 7000
55	AS REQ'D	UNDERVOLTAGE RELAY	TIME MARK	C26(XX)
56	1	INTERPOSING RELAY FOR LOCKOUT RELAY	GENERAL ELECTRIC	HMA
58	1	COOLING GROUP SELECTOR SW (DEVICE 43TF)	ELECTROSWITCH	SERIES 24
59	AS REQ'D	TERMINAL BLOCKS - CONTROL SIGNAL TYPE	STATES	TYPE NT, CLASS 250
61	AS REQ'D	TERMINAL BLOCKS - SHORT CIRCUIT	STATES	TYPE NT, CLASS 251-G
62	AS REQ'D	TERMINAL BLOCKS - POWER DISTRIBUTION TYPE	MARATHON	SERIES 142
63	AS REQ'D	FUSES	BUSSMAN	LPJ
64	AS REQ'D	FUSEHOLDERS	BUSSMAN	JTN600(XX)
65	AS REQ'D	CABINET HEATER	WAUKESHA	PTC2
66	1	HUMIDISTAT / THERMOSTAT (DEVICE 23-1)	HAMMOND MFG	SKTH012009-C
67	1	RECEPTACLE WITH GFCI	HUBBELL	GFR8300SGW
68	1	GROUND BUS BAR	-	-

GENERAL NOTES

1. THE TRANSFORMER CONTROL AND POWER CABINETS ARE TO BE DESIGNED AND BUILT IN ACCORDANCE WITH UL 508A STANDARD.
2. THE CONTROL CABINET LAYOUT AS SHOWN IS FOR ILLUSTRATIVE PURPOSES ONLY. THE ACTUAL LAYOUT MAY BE MODIFIED BY THE CONTRACTOR.
3. THE CONTROL CABINET IS TO BE DESIGNED FOR THE FUTURE INSTALLATION OF AN ELECTRONIC COOLING CONTROL SYSTEM IN A REAR MOUNT CHASSIS IN THE CONTROL CABINET. WITH AN HMI MODULE REMOTELY MOUNTED ON THE SWING PANEL SO THAT THE FRONT IS VISIBLE THROUGH A WATERPROOF VIEWING GLASS IN THE LEFT CONTROL CABINET DOOR.
4. THE CONTROL CABINET IS TO BE DESIGNED FOR THE FUTURE INSTALLATION OF ONE ANNUNCIATOR MOUNTED ON THE SWING PANEL SO THAT THE FRONT IS VISIBLE THROUGH A WATERPROOF VIEWING GLASS IN THE RIGHT CONTROL CABINET DOOR.
5. THE GFCI OUTLET IS TO BE ACCESSIBLE ONLY FROM INSIDE OF THE CONTROL CABINET.
6. THE REMOVABLE BOTTOM PLATE THICKNESS IS TO BE 10 GAUGE, MINIMUM.

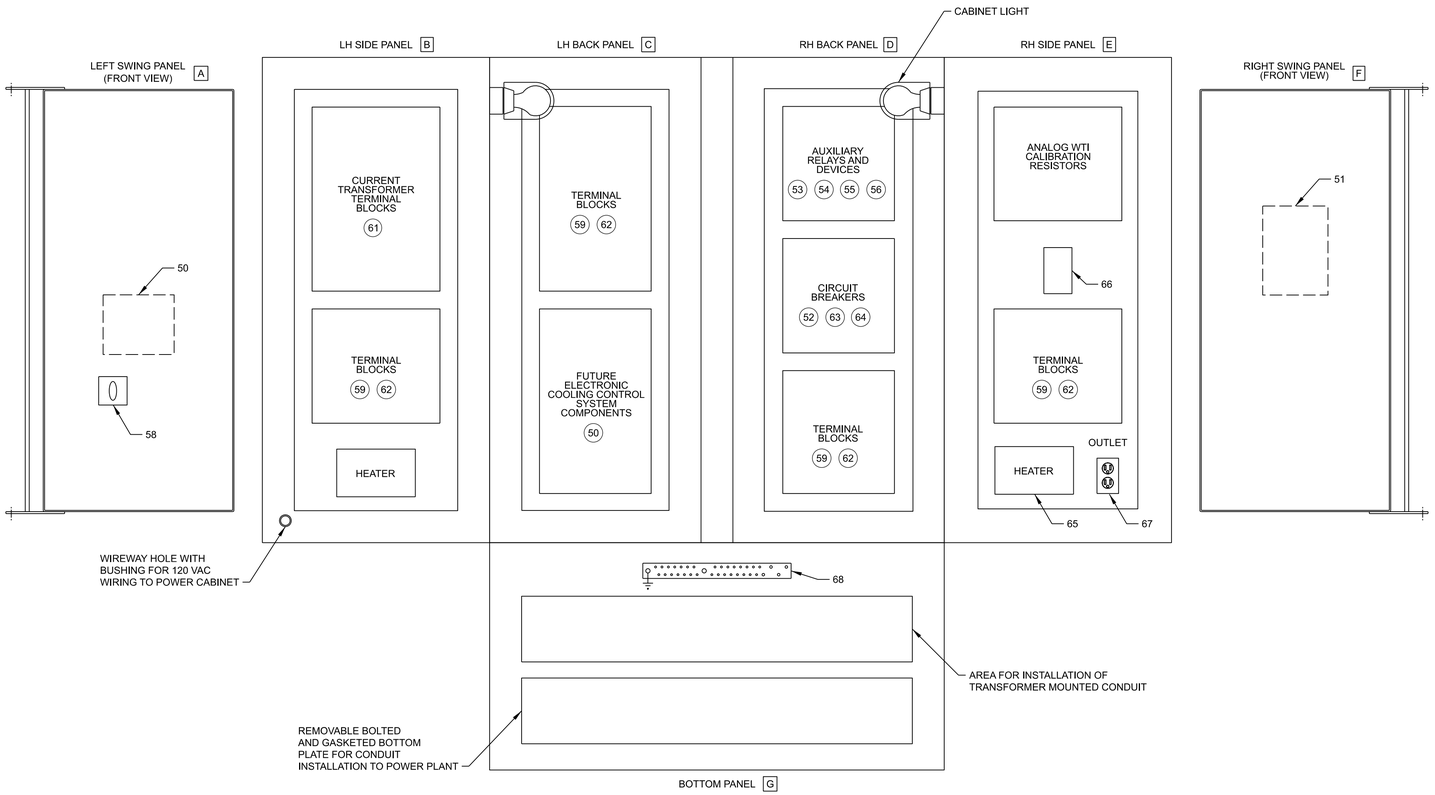

A1 CONTROL CABINET LAYOUT

SCALE: NTS

US Army Corps of Engineers®

MARK	DESCRIPTION	DATE

ISSUE DATE:	OCTOBER 2025
SOLICITATION NO.:	W912EF26RA003
CONTRACT NO.:	
FILE NUMBER:	LGP-14-14A007
DESIGNED BY:	P. KLEINE, P.E.
DRAWN BY:	M. GUNDRUM
CHECKED BY:	S. COTNER, P.E.
SUBMITTED BY:	JORDAN S. PRINK, P.E.
SIZE:	ANSI D
FILE NAME:	LG503118_E-107.dgn

U.S. ARMY CORPS OF ENGINEERS
WALLA WALLA DISTRICT
201 N 3RD AVE
WALLA WALLA, WASHINGTON

US ARMY CORPS OF ENGINEERS
HYDROELECTRIC DESIGN CENTER
333 SW 1ST AVE
PORTLAND, OREGON

LITTLE GOOSE LOCK AND DAM
LOWER SNAKE RIVER SPARE TRANSFORMERS
T2

CONTROL CABINET LAYOUT

INSTALL

SHEET ID
VOLUME 2
E-107

FINAL

DS: LG503118_E-107.dgn
PD: 9:50:41 AM 9/19/2025

BILL OF MATERIALS - POWER CABINET COMPONENTS

ITEM	QTY	DESCRIPTION	EXAMPLE	MODEL NUMBER
52	AS REQ'D	MOLDED-CASE CIRCUIT BREAKERS	SQUARE D	KHL
59	AS REQ'D	TERMINAL BLOCKS - CONTROL SIGNAL TYPE	STATES	TYPE NT, CLASS 250
62	AS REQ'D	TERMINAL BLOCKS - POWER DISTRIBUTION TYPE	MARATHON	SERIES 142
63	AS REQ'D	FUSES	BUSSMAN	LPJ
64	AS REQ'D	FUSEHOLDERS	BUSSMAN	JTN600(XX)
65	AS REQ'D	CABINET HEATER	WAUKESHA	PTC2
66	AS REQ'D	HUMIDISTAT / THERMOSTAT (DEVICE 23-2)	HAMMOND MFG	SKTH012009-C
68	1	GROUND BUS BAR	-	-
71	AS REQ'D	MAGNETIC CONTACTORS	SQUARE D	8502

GENERAL NOTES

1. THE LAYOUT SHOWN IS FOR ILLUSTRATIVE PURPOSES ONLY AND MAY BE MODIFIED BY THE CONTRACTOR.
2. ALL 480 VAC PROTECTIVE AND CONTROL EQUIPMENT FOR THE COOLING FANS, INCLUDING THE MOLDED-CASE CIRCUIT BREAKERS, CONTACTORS AND POWER TERMINAL BLOCKS SHALL BE MOUNTED IN THE 480 VAC POWER CABINET.
3. THE REMOVABLE BOTTOM PLATE THICKNESS SHALL BE 10 GAUGE, MINIMUM.

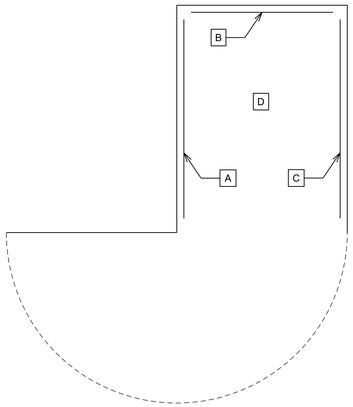

A7 POWER CABINET - TOP VIEW
SCALE: NTS

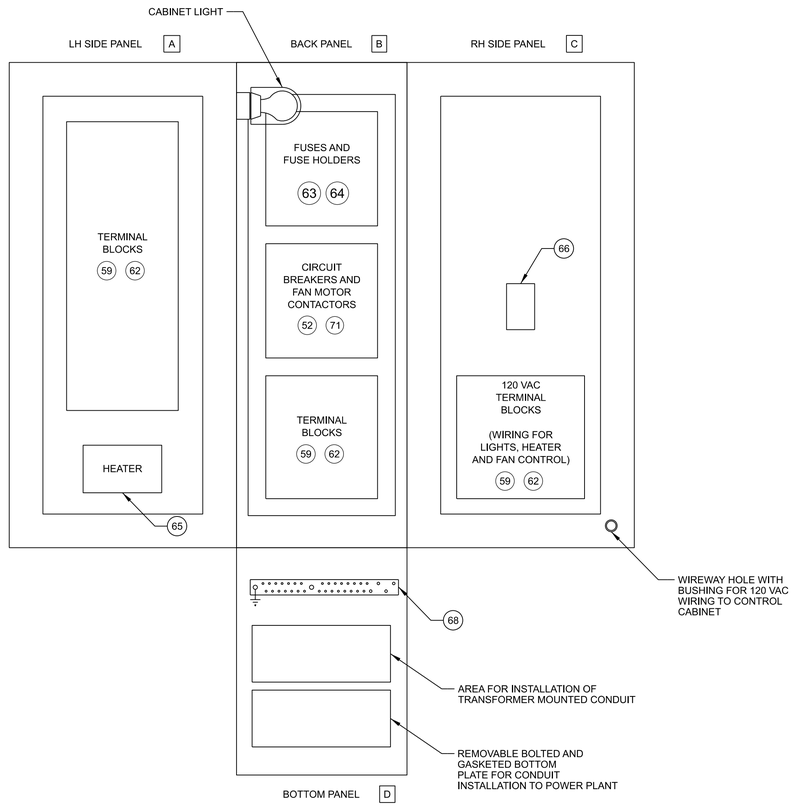

A12 POWER CABINET LAYOUT
SCALE: NTS

US Army Corps of Engineers®

MARK	DESCRIPTION	DATE

DESIGNED BY: P. KLEINE, P.E.
DRAWN BY: M. GUNDRUM
CHECKED BY: S. COTNER, P.E.
SUBMITTED BY: JORDAN S. FINK, P.E.
SIZE: ANSI D
FILE NAME: LG503118_E-108.dgn
ISSUE DATE: OCTOBER 2025
SOLICITATION NO.: W912EF26RA003
CONTRACT NO.:
FILE NUMBER: LGP-1-6-1A40/8

U.S. ARMY CORPS OF ENGINEERS
WALLA WALLA DISTRICT
201 N 3RD AVE
WALLA WALLA, WASHINGTON

US ARMY CORPS OF ENGINEERS
HYDROELECTRIC DESIGN CENTER
333 SW 1ST AVE
PORTLAND, OREGON

LITTLE GOOSE LOCK AND DAM
LOWER SNAKE RIVER SPARE TRANSFORMERS
T2

POWER CABINET LAYOUT

INSTALL

SHEET ID
VOLUME 2
E-108

FINAL

LG503118_E-108.dgn
DS:
PD:
9:50:45 AM 9/19/2025

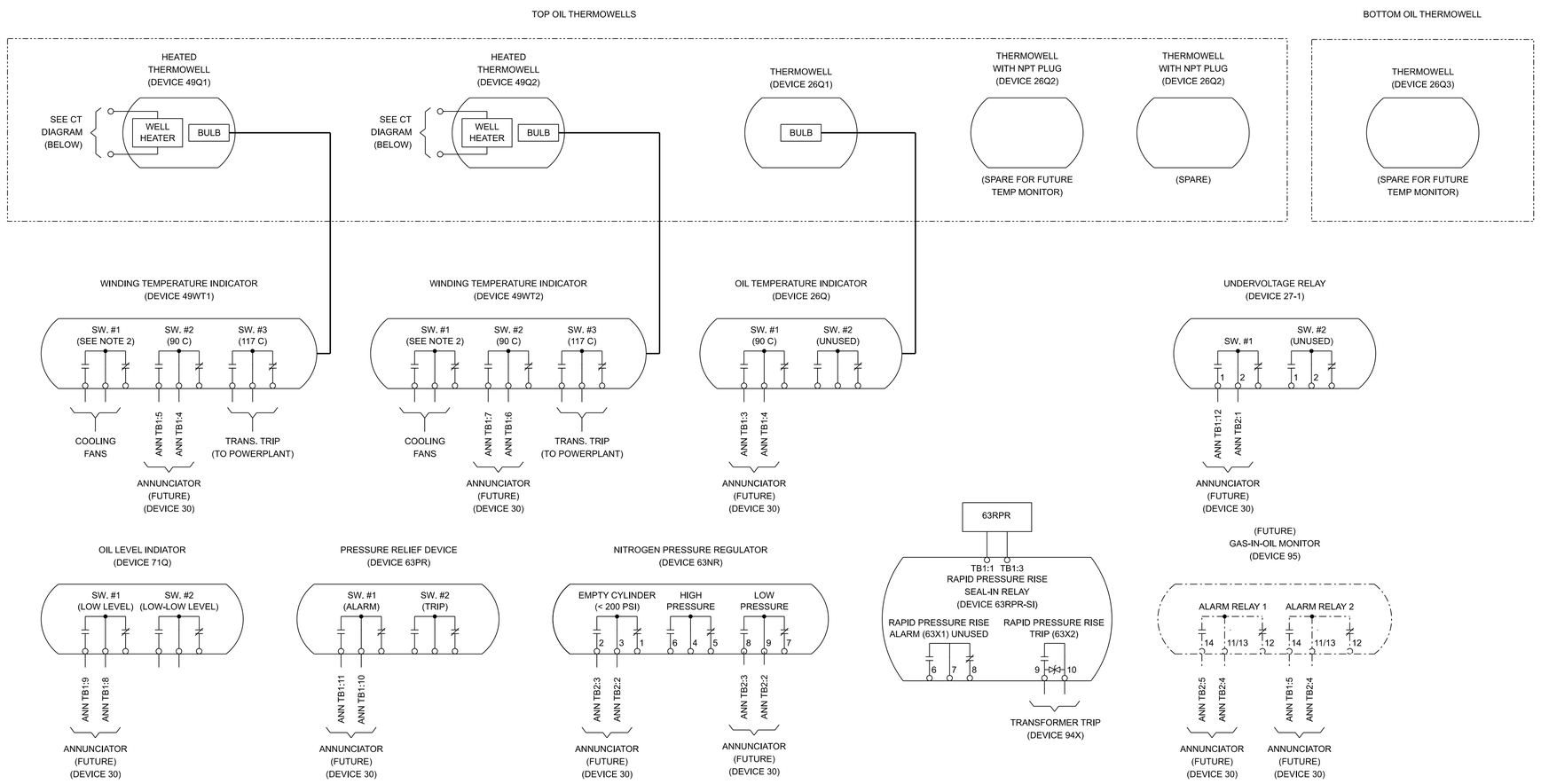

GENERAL NOTES

1. ALL BUSHING CURRENT TRANSFORMERS AND CURRENT TRANSFORMER SECONDARY WIRING IS TO BE ROUTED TO THE CONTROL CABINET AND TERMINATED ON SHORTING TERMINAL BLOCKS.
2. THE WINDING TEMPERATURE SETTING FOR ENERGIZING THE COOLING FANS IS TO BE BASED UPON THE RESULTS OF THE FACTORY TEMPERATURE RISE TESTS AT THE ONAN RATING.
3. THE DRAWINGS SHOWN ARE FOR A NITROGEN SYSTEM. IF A CONSERVATOR TANK SYSTEM IS PROVIDED, THE ALARMS FOR NITROGEN PRESSURE SYSTEM ARE NOT REQUIRED, AND ALARMS FOR BUCHHOLZ RELAY SHALL BE INCLUDED.

LEGEND

26Q	ANALOG OIL TEMPERATURE INDICATOR
26Q1,2,3	THERMOWELLS
27	UNDERVOLTAGE RELAY
30	ANNUNCIATOR
49Q1,2	HEATED THERMOWELLS
49R1,2	CALIBRATION DEVICES
49WT1,2	ANALOG WINDING TEMPERATURE INDICATORS
63NR	NITROGEN PRESSURE REGULATOR
63PR	PRESSURE RELIEF DEVICE
63RPR	RAPID PRESSURE RISE RELAY
63RPR-SI	RAPID PRESSURE RISE RELAY SEAL-IN RELAY
63X1	RAPID PRESSURE RISE RELAY ALARM
63X2	RAPID PRESSURE RISE RELAY TRIP
71Q	OIL LEVEL INDICATOR
94X	TRIP AUXILIARY RELAY
95	GAS-IN-OIL MONITOR
DGA	DISSOLVED GAS ANALYZER
BCT_	MULTI-RATIO BUSHING CURRENT TRANSFORMERS
CT_	CURRENT TRANSFORMERS
H0	HIGH-VOLTAGE NEUTRAL BUSHING
H1	HIGH-VOLTAGE BUSHING
RTD	RESISTANCE TEMPERATURE DETECTOR
SW	SWITCH
TB_	TERMINAL BLOCKS
TS_	TEST SWITCH
X1	LOW-VOLTAGE BUSHING
Y1	LOW-VOLTAGE BUSHING
— - —	DEVICES AND WIRING TO BE INSTALLED IN THE FUTURE BY THE GOVERNMENT

A1 CURRENT TRANSFORMERS AND HEAT THERMOWELLS
SCALE: NTS

US Army Corps of Engineers®

MARK	DESCRIPTION	DATE

DESIGNED BY:	P. KLEINE, P.E.
DRAWN BY:	M. GUNDRUM
CHECKED BY:	S. COTNER, P.E.
SUBMITTED BY:	JORDAN S. FINK, P.E.
SIZE:	ANSI D
ISSUE DATE:	OCTOBER 2025
SOLICITATION NO.:	W912EF26RA003
CONTRACT NO.:	
FILE NUMBER:	LGP-1-04-1A009
FILENAME:	LG503118_E-109.dgn

U.S. ARMY CORPS OF ENGINEERS
WALLA WALLA DISTRICT
201 N 3RD AVE
WALLA WALLA, WASHINGTON

US ARMY CORPS OF ENGINEERS
HYDROELECTRIC DESIGN CENTER
333 SW 1ST AVE
PORTLAND, OREGON

LITTLE GOOSE LOCK AND DAM
LOWER SNAKE RIVER SPARE TRANSFORMERS
T2

TRANSFORMER MOUNTED DEVICES
LAYOUT AND DETAILS
INSTALL

SHEET ID
VOLUME 2
E-109

FINAL

DS: LG503118_E-109.dgn
PD: 9:50:50 AM 9/19/2025

LEGEND CONT

86TX	LOCKOUT RELAY (LOCATED IN THE POWERHOUSE)
88	FAN MOTOR
94X	TRIP AUXILIARY RELAY
DGA	DISSOLVED GAS ANALYZER (FUTURE)
DS	CABINET DOOR SWITCH
ETM	ELECTRONIC TRANSFORMER MONITORING SYSTEM (FUTURE)
FCT	FAN CURRENT TRANSFORMER
GFCI	GROUND FAULT CIRCUIT INTERRUPTER
HTR	CABINET HEATER
LT	CABINET LIGHT
PDB	POWER DISTRIBUTION BLOCK

LEGEND

23	INDUSTRIAL GRADE HUMIDISTAT / THERMOSTAT
27	UNDERVOLTAGE RELAY
30	ANNUNCIATOR
42	COOLING GROUP MOTOR CONTACTOR
49WT1,2	ANALOG WINDING TEMPERATURE INDICATORS
52-_	AC MOLDED-CASE CIRCUIT BREAKERS
63RPR	RAPID PRESSURE RISE RELAY
63RPR-SI	RAPID PRESSURE RISE RELAY SEAL-IN RELAY
72-_	DC MOLDED-CASE CIRCUIT BREAKERS
- - -	FUTURE EQUIPMENT OR WIRING TO BE INSTALLED BY THE GOVERNMENT
— • —	EQUIPMENT LOCATED IN OTHER LOCATIONS AS NOTED

GENERAL NOTES

1. THE PURPOSE OF THE 94X AUXILIARY RELAY IS TO ALLOW FOR TRIPPING OF THE 86T LOCKOUT WITHOUT OVERLOADING THE ELECTRONIC TEMPERATURE MONITOR (ETM) OUTPUT RELAY CONTACTS THAT WILL BE INSTALLED IN THE FUTURE. THE BURDEN OF THE LOCKOUT RELAY SOLENOID EXCEEDS THE RATING OF THE ETM. THE ETM OUTPUTS WILL BE WIRED IN PARALLEL WITH THE 49WT CONTACTS IN THE FUTURE.
2. DETAILED WIRING DESIGN SHALL BE PERFORMED BY CONTRACTOR.
3. KVA VALUES SHOWN ARE FOR ILLUSTRATION PURPOSES ONLY. THE CONTRACTOR DESIGN MAY DIFFER FROM VALUES SHOWN.
4. THE 86TX TRANSFORMER LOCKOUT AND ASSOCIATED CONTACTS ARE LOCATED IN IN THE POWERHOUSE. SEE SHEET E-603 FOR TERMINAL DETAILS.

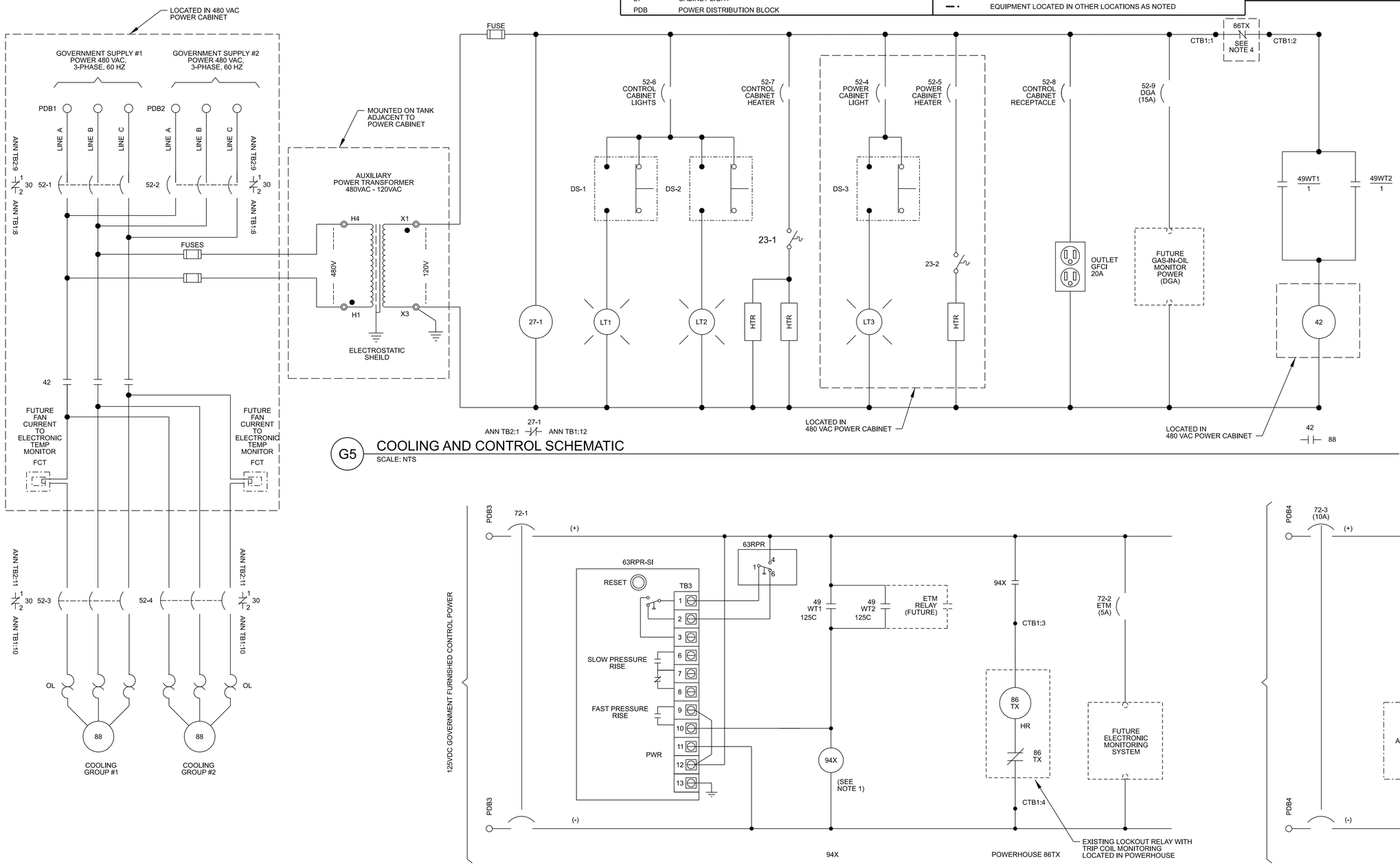

G5 COOLING AND CONTROL SCHEMATIC

SCALE: NTS

A6 125 VDC CONTROL SCHEMATIC

SCALE: NTS

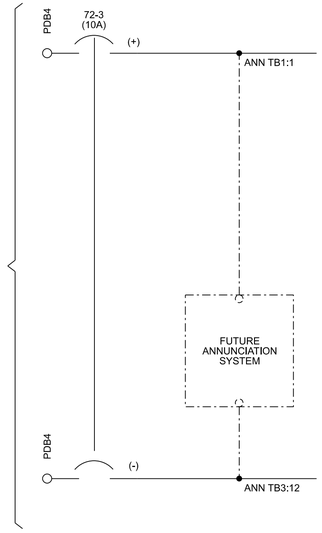

A17 125 VDC ANNUNCIATION SCHEMATIC

SCALE: NTS

US Army Corps of Engineers®

MARK	DESCRIPTION	DATE

DESIGNED BY:	P. KLEINE, P.E.
DRAWN BY:	M. GUNDRUM
CHECKED BY:	S. COTNER, P.E.
SUBMITTED BY:	JORDAN S. FINK, P.E.
SIZE:	ANSI D
ISSUE DATE:	OCTOBER 2025
SOLICITATION NO.:	W912EF26RA003
CONTRACT NO.:	
FILE NUMBER:	LGP-1-6-1A2411
FILENAME:	LG503118_E-601.dgn

U.S. ARMY CORPS OF ENGINEERS
WALLA WALLA DISTRICT
201 N 3RD AVE
WALLA WALLA, WASHINGTON

US ARMY CORPS OF ENGINEERS
HYDROELECTRIC DESIGN CENTER
333 SW 1ST AVE
PORTLAND, OREGON

LITTLE GOOSE LOCK AND DAM
LOWER SNAKE RIVER SPARE TRANSFORMERS
T2

CONTROL SCHEMATICS

INSTALL

SHEET ID
VOLUME 2
E-601

FINAL

DS: LG503118_E-601.dgn

PD: 9:50:54 AM 9/19/2025

GENERAL NOTES

1. DRAWING SHOWS FUTURE ANNUNCIATION CONNECTIONS TO POWERHOUSE ANNUNCIATION SYSTEM THAT WILL BE WIRED IN THE FUTURE. CONTRACTOR MUST WIRE ANNUNCIATION POINTS TO TERMINAL BLOCKS IN CONTROL CABINET AS INDICATED BY SOLID LINES. DASHED LINES INDICATES WIRES THAT WILL BE INSTALLED BY THE GOVERNMENT IN THE FUTURE.
2. PROVIDE 12AWG JUMPERS AS INDICATED FOR ANN TB1 AND ANN TB2 TO ALLOW FOR DAISY CHAINING THE POSITIVE GOVERNMENT FURNISHED 125VDC ANNUNCIATION POWER TO DEVICE CONTACTS.
3. SEE SHEET E-109 FOR ALARM CONTACT DETAILS.
4. THE ANNUNCIATION CIRCUIT DESIGN IS BASED ON THE SEL-2533 ANNUNCIATOR AND A INERT-GAS OIL PRESERVATION SYSTEM.

LEGEND

26Q	ANALOG OIL TEMPERATURE INDICATOR
27	UNDERVOLTAGE RELAY
49WT1,2	ANALOG WINDING TEMPERATURE INDICATORS
63NR	NITROGEN PRESSURE REGULATOR
63PR	PRESSURE RELIEF DEVICE
71Q	OIL LEVEL INDICATOR
86TX	LOCKOUT RELAY
NO	NORMALLY OPEN CONTACT
NC	NORMALLY CLOSED CONTACT
PH	POWER HOUSE ANNUNCIATION
– · –	INDICATES FUTURE WIRING OR DEVICES TO BE INSTALLED BY THE GOVERNMENT
——	INDICATES WIRING TO BE INSTALLED BY THE CONTRACTOR

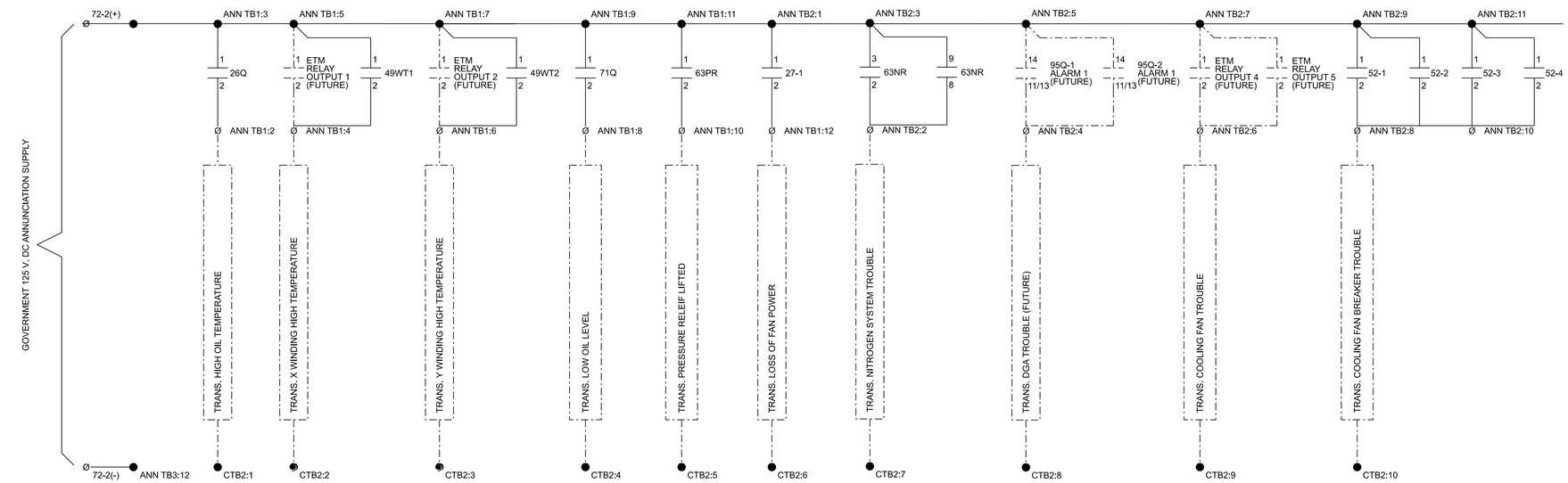

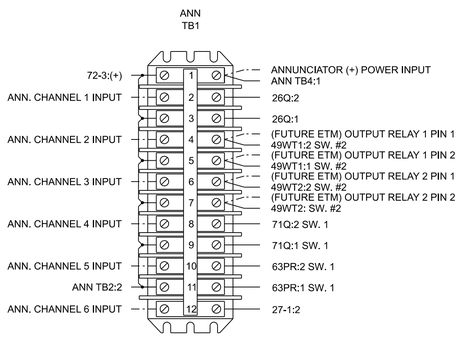

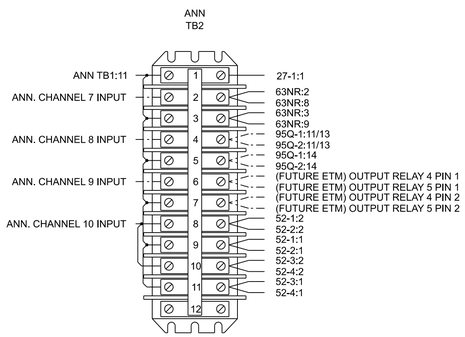

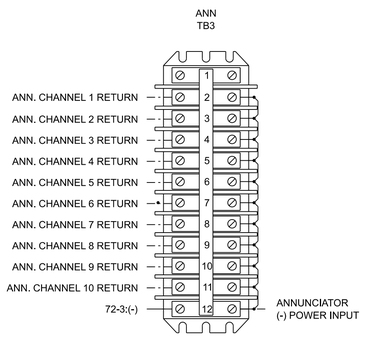

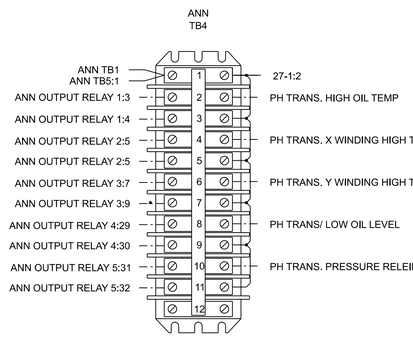

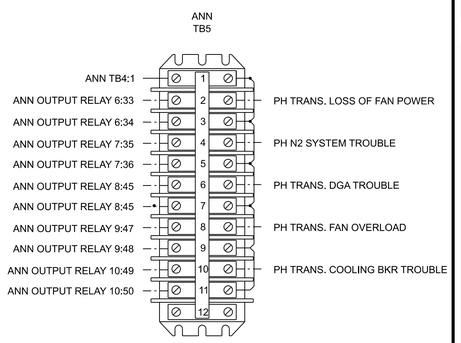

US Army Corps of Engineers®

MARK	DESCRIPTION	DATE

DESIGNED BY: P. KLEINE, P.E.	ISSUE DATE: OCTOBER 2025
DRAWN BY: M. GUNDRUM	SOLICITATION NO.: W912EF26RA003
CHECKED BY: S. COTNER, P.E.	CONTRACT NO.:
SUBMITTED BY: JORDAN S. TINNUS, P.E.	FILE NUMBER: LGP-1-6-1A24/2
ANSI D	FILENAME: LG503118_E-602.dgn

U.S. ARMY CORPS OF ENGINEERS
WALLA WALLA DISTRICT
201 N 3RD AVE
WALLA WALLA, WASHINGTON

US ARMY CORPS OF ENGINEERS
HYDROELECTRIC DESIGN CENTER
333 SW 1ST AVE
PORTLAND, OREGON

LITTLE GOOSE LOCK AND DAM
LOWER SNAKE RIVER SPARE TRANSFORMERS
T2

ANNUNCIATOR SCHEMATICS

INSTALL

SHEET ID
VOLUME 2
E-602

FINAL

DS: LG503118_E-602.dgn
PD: 9:50:58 AM 9/19/2025

GENERAL NOTES

1. THE LAYOUT SHOWN IS FOR ILLUSTRATIVE PURPOSES ONLY, AND MAY BE MODIFIED BY THE CONTRACTOR.
2. THE LEFT SIDE OF THE TERMINAL BLOCKS ARE RESERVED FOR FUTURE WIRING CONNECTIONS TO THE POWERHOUSE. MAKE ALL TRANSFORMER CONNECTIONS TO THE RIGHT SIDE OF THE TERMINAL BLOCKS.
3. TERMINAL BLOCK CTB1 IS FOR CONNECTIONS TO THE 86TX LOCKOUT CIRCUIT IN THE POWERHOUSE. WIRE THE RIGHT SIDE OF THE TERMINAL AS INDICATED.
4. PROVIDE TWO TERMINAL BLOCKS, DESIGNATED CTB3, AND CTB4 IN THE CONTROL CABINET FOR FUTURE GOVERNMENT WIRING.
5. THE WIRING TO CTB2 IS WIRING FROM THE FUTURE ANNUNCIATION SYSTEM TO BE INSTALLED BY THE GOVERNMENT.

LEGEND

BCT_	BUSHING CURRENT TRANSFORMERS
CTB_	CONTROL TERMINAL BLOCKS
PDB_	POWER DISTRIBUTION BLOCKS
STB_	SHORTING TERMINAL BLOCKS (CT WIRING)
—·—	INDICATES WIRING OR DEVICES TO BE INSTALLED BY THE GOVERNMENT
——	INDICATES WITING TO BE INSTALLED BY THE CONTRACTOR

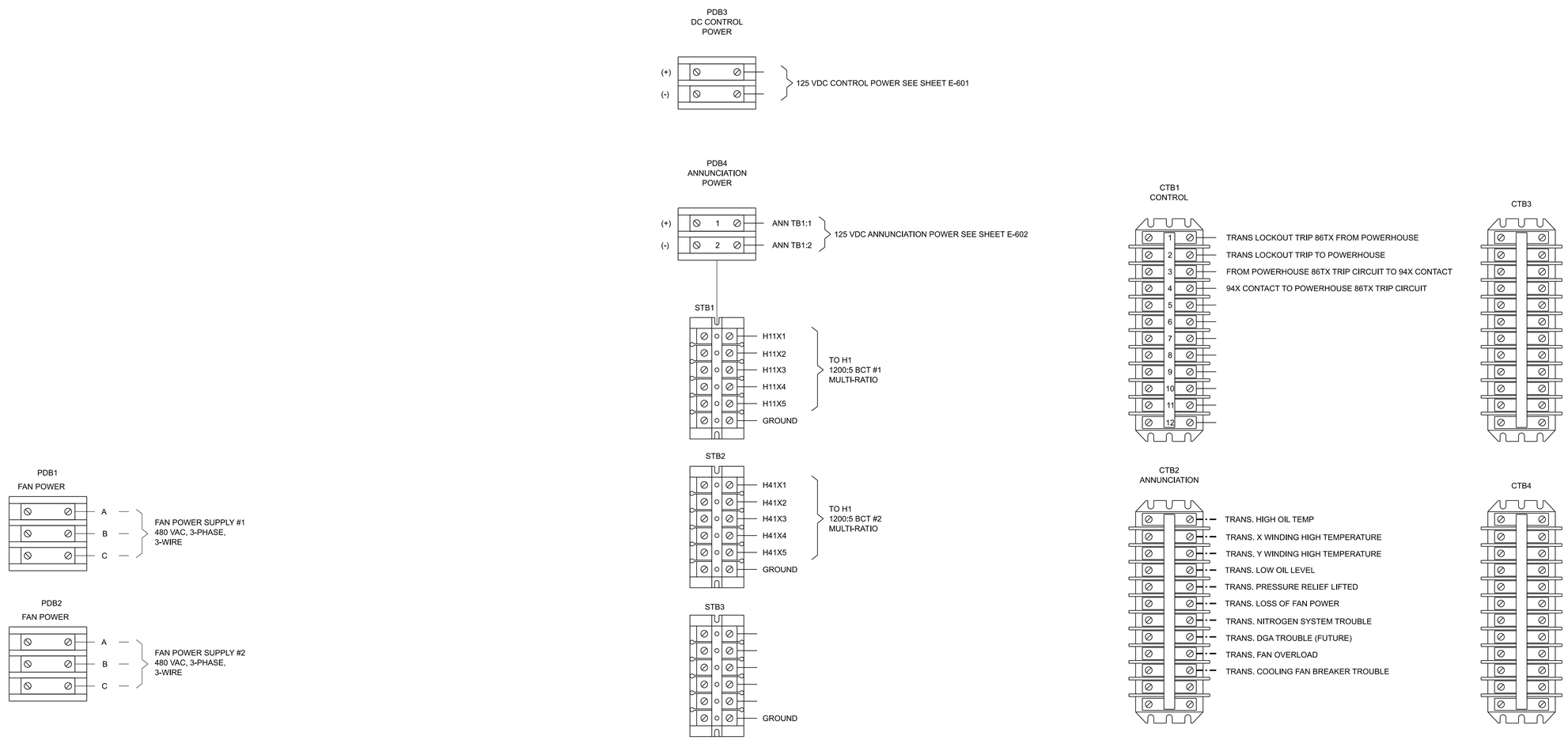

A1 POWER CABINET TERMINAL BLOCKS FOR EXTERNAL CONNECTIONS
SCALE: NTS

A8 CONTROL CABINET TERMINAL BLOCKS FOR EXTERNAL CONNECTIONS
SCALE: NTS

US Army Corps of Engineers®

MARK	DESCRIPTION	DATE

DESIGNED BY: P. KLEINE, P.E.
DRAWN BY: M. GUNDRUM
CHECKED BY: S. COTNER, P.E.
SUBMITTED BY: JORDAN S. FINK, P.E.
SIZE: ANSI D
FILENAME: LG503118_E-603.dgn
ISSUE DATE: OCTOBER 2025
SOLICITATION NO.: W912EF26RA003
CONTRACT NO.:
FILE NUMBER: LGP-1-6-1A24/3

U.S. ARMY CORPS OF ENGINEERS
WALLA WALLA DISTRICT
201 N 3RD AVE
WALLA WALLA, WASHINGTON

US ARMY CORPS OF ENGINEERS
HYDROELECTRIC DESIGN CENTER
333 SW 1ST AVE
PORTLAND, OREGON

LITTLE GOOSE LOCK AND DAM
LOWER SNAKE RIVER SPARE TRANSFORMERS
T2

CONTROL CABINET EXTERNAL CONNECTIONS

INSTALL

SHEET ID
VOLUME 2
E-603

FINAL

LG503118_E-603.dgn
DS:
PD:
9:51:02 AM 9/19/2025