US Army Corps of Engineers®
WALLA WALLA DISTRICT

VOLUME 1 - SPARE TRANSFORMERS T1

VOLUME 2 - SPARE TRANSFORMERS T2

LITTLE GOOSE LOCK AND DAM
LOWER SNAKE RIVER SPARE TRANSFORMERS
T1

D1 VICINITY MAP
SCALE: NTS

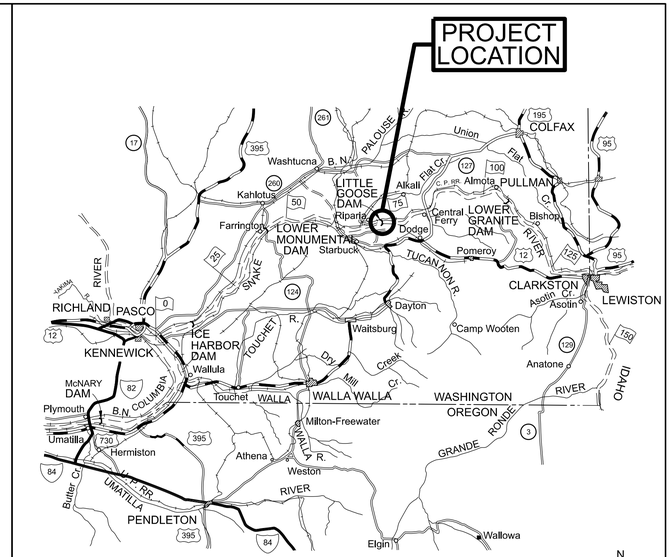

D7 LOCATION MAP
SCALE: NTS

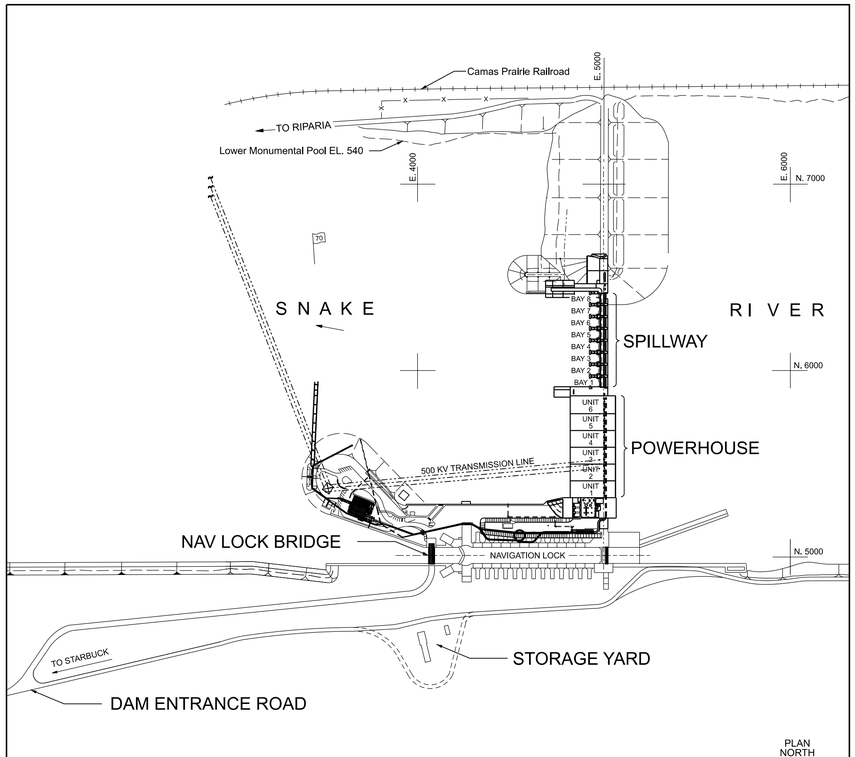

G13 SITE MAP
SCALE: NTS

SOLICITATION NO.: W912EF26RA003
CONTRACT NO.:
ISSUE DATE: OCTOBER 2025
VOLUME NO.: 1

THIS PROJECT WAS DESIGNED BY THE HYDROELECTRIC DESIGN CENTER OF THE U.S. ARMY CORPS OF ENGINEERS. THE INITIALS OR SIGNATURES AND REGISTRATION DESIGNATIONS OF INDIVIDUALS APPEAR ON THESE PROJECT DOCUMENTS WITHIN THE SCOPE OF THEIR EMPLOYMENT AS REQUIRED BY ER 1110-1-8152.

APPROVED BY: FINK.JORDAN.S.1391890664 Digitally signed by FINK.JORDAN.S.1391890664 Date: 2025.09.24 08:54:59 -07'00' JORDAN S. FINK, P.E. DIRECTOR OF HYDROELECTRIC DESIGN CENTER	APPROVED BY: Dwayne M. Weston DWAYNE WESTON, P.E. CHIEF OF ENGINEERING & CONST DIV. WALLA WALLA DISTRICT
SUBMITTED BY: YEN.JOHN.ZHONG.1386572999 Digitally signed by YEN.JOHN.ZHONG.1386572999 Date: 2025.09.22 15:41:57 -07'00' JOHN Z. YEN, P.E. CHIEF OF ELECTRICAL BRANCH HYDROELECTRIC DESIGN CENTER	SUBMITTED BY: MARCUS PALMER, P.E. CHIEF OF DESIGN BRANCH WALLA WALLA DISTRICT
	SUBMITTED BY: Kameron D. Sellers LEVI VAN STEDUM, P.E. CHIEF OF ELECTRICAL DESIGN SECTION WALLA WALLA DISTRICT

US Army Corps of Engineers®

MARK	DESCRIPTION	DATE

DESIGNED BY: P. KLEINE, P.E.
DRAWN BY: P. KLEINE, P.E.
CHECKED BY: D. FILER
SUBMITTED BY: JORDAN S. FINK, P.E.
ANSI D LGS03118a_G-001.dgn

ISSUE DATE: OCTOBER 2025
SOLICITATION NO.: W912EF26RA003
CONTRACT NO.:
FILE NUMBER: LGS-1-0-0-A0/1

U.S. ARMY CORPS OF ENGINEERS
WALLA WALLA DISTRICT
201 N 3RD AVE
WALLA WALLA, WASHINGTON

US ARMY CORPS OF ENGINEERS
HYDROELECTRIC DESIGN CENTER
333 SW 1ST AVE
PORTLAND, OREGON

LITTLE GOOSE LOCK AND DAM
LOWER SNAKE RIVER SPARE TRANSFORMERS
T1

PROJECT LOCATION & VICINITY MAPS

SHEET ID
VOLUME 1
G-001

FINAL

DRAWING INDEX

SHEET NO	DRAWING NUMBER	TITLE
		GENERAL
G-001	LG503118a_G-001.dgn	PROJECT LOCATION & VICINITY MAPS
G-002	LG503118a_G-002.dgn	DRAWING INDEX
G-003	LG503118a_G-003.dgn	TRANSFORMER SITE DELIVERY AND STORAGE LOCATION
G-004	LG503118a_G-004.dgn	TRANSFORMER EQUIPMENT SUMMARY SHEET
G-005	LG503118a_G-005.dgn	REGIONAL TEMPERATURE ANNUAL SUMMARY
G-006	LG503118a_G-006.dgn	SITE LOCATION PHOTOGRAPHS
		ELECTRICAL
E-101	LG503118a_E-101.dgn	GENERATOR STEP-UP TRANSFORMER -- TOP VIEW
E-102	LG503118a_E-102.dgn	GENERATOR STEP-UP TRANSFORMER -- LAYOUT AND LIMITING DIMENSIONS -- SEGMENT 1
E-103	LG503118a_E-103.dgn	GENERATOR STEP-UP TRANSFORMER -- LAYOUT AND LIMITING DIMENSIONS -- SEGMENT 2
E-104	LG503118a_E-104.dgn	GENERATOR STEP-UP TRANSFORMER -- LAYOUT AND LIMITING DIMENSIONS -- SEGMENT 3
E-105	LG503118a_E-105.dgn	GENERATOR STEP-UP TRANSFORMER -- LAYOUT AND LIMITING DIMENSIONS -- SEGMENT 4
E-106	LG503118a_E-106.dgn	GENERATOR STEP-UP TRANSFORMER -- POWER AND CONTROL CABINETS
E-107	LG503118a_E-107.dgn	GENERATOR STEP-UP TRANSFORMER -- CONTROL CABINET LAYOUT
E-108	LG503118a_E-108.dgn	GENERATOR STEP-UP TRANSFORMER -- POWER CABINET LAYOUT
E-109	LG503118a_E-109.dgn	GENERATOR STEP-UP TRANSFORMER -- TRANSFORMER MOUNTED DEVICES -- LAYOUT AND DETAILS
E-601	LG503118a_E-601.dgn	GENERATOR STEP-UP TRANSFORMER -- CONTROL SCHEMATICS
E-602	LG503118a_E-602.dgn	GENERATOR STEP-UP TRANSFORMER -- ANNUNCIATOR SCHEMATICS
E-603	LG503118a_E-603.dgn	GENERATOR STEP-UP TRANSFORMER -- CONTROL CABINET EXTERNAL CONNECTIONS

DRAWING INDEX

FILE NUMBER	TITLE

US Army Corps of Engineers®

MARK	DESCRIPTION	DATE

DESIGNED BY: P. KLEINE, P.E.
DRAWN BY: P. KLEINE, P.E.
CHECKED BY: D. FILER
SUBMITTED BY: JORDAN S. TINKA, P.E.
SIZE: ANSI D
FILENAME: LG503118a_G-002.dgn
ISSUE DATE: OCTOBER 2025
SOLICITATION NO.: W912EF26RA003
CONTRACT NO.:
FILE NUMBER: LGS-1-0-0-A-072

U.S. ARMY CORPS OF ENGINEERS
WALLA WALLA DISTRICT
201 N 3RD AVE
WALLA WALLA, WASHINGTON

US ARMY CORPS OF ENGINEERS
HYDROELECTRIC DESIGN CENTER
333 SW 1ST AVE
PORTLAND, OREGON

LITTLE GOOSE LOCK AND DAM
LOWER SNAKE RIVER SPARE TRANSFORMERS
T1

DRAWINGS INDEX

SHEET ID
VOLUME 1
G-002

FINAL

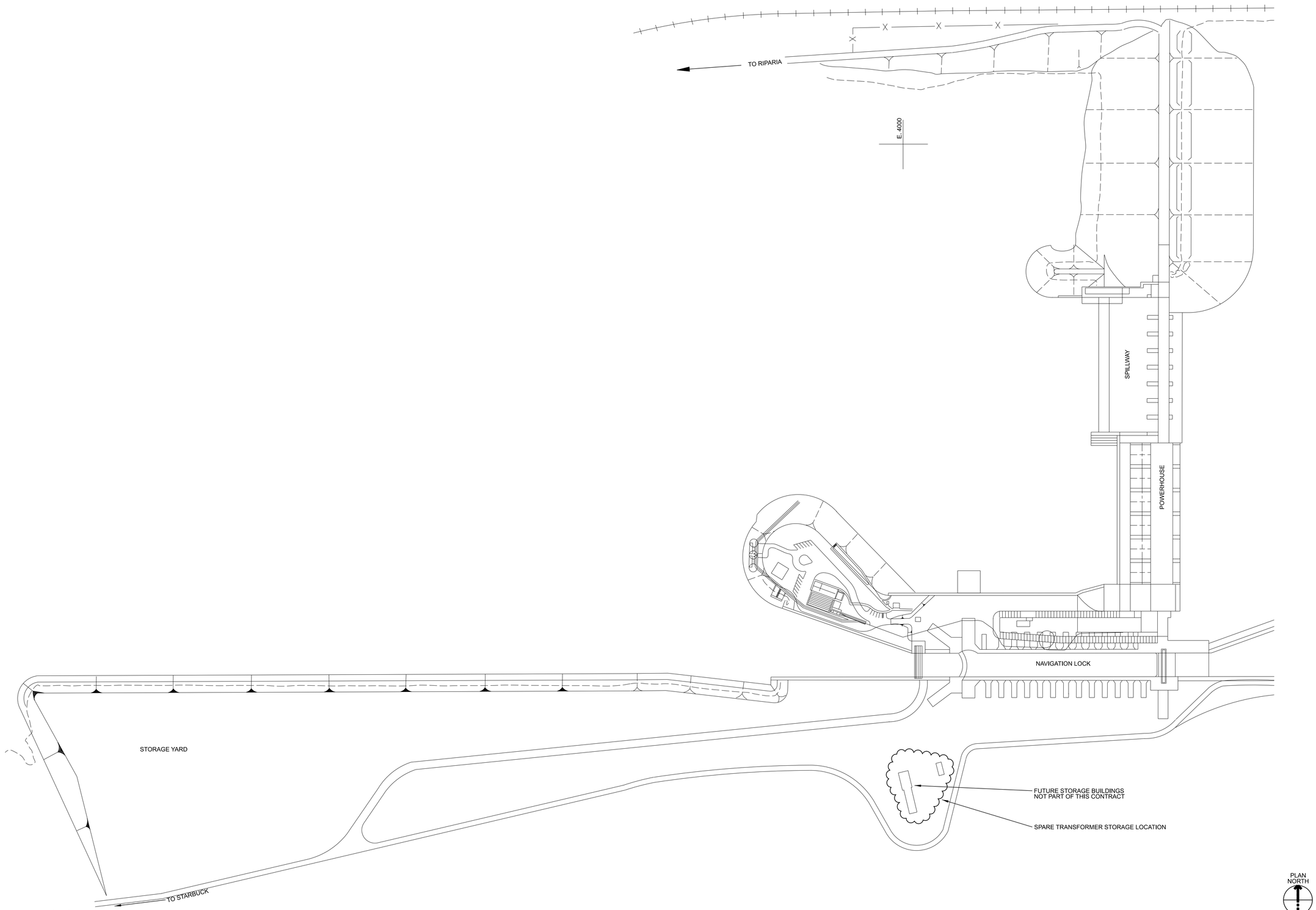

A1 TRANSFORMER SITE

SCALE: NTS

US Army Corps of Engineers®

MARK	DESCRIPTION	DATE

DESIGNED BY: P. KLEINE, P.E.	ISSUE DATE: OCTOBER 2025
DRAWN BY: P. KLEINE, P.E.	SOLICITATION NO.: W912EF26RA003
CHECKED BY: D. FILER	CONTRACT NO.:
SUBMITTED BY: JORDAN S. FINK, P.E.	FILE NUMBER: LGS-1-G-A-003
SIZE: ANSI D	FILENAME: LGS03118a_G-003.dgn

U.S. ARMY CORPS OF ENGINEERS
WALLA WALLA DISTRICT
201 N 3RD AVE
WALLA WALLA, WASHINGTON

US ARMY CORPS OF ENGINEERS
HYDROELECTRIC DESIGN CENTER
333 SW 1ST AVE
PORTLAND, OREGON

LITTLE GOOSE LOCK AND DAM
LOWER SNAKE RIVER SPARE TRANSFORMERS
T1

TRANSFORMER SITE DELIVERY AND STORAGE LOCATION

SHEET ID
VOLUME 1
G-003

FINAL

LITTLE GOOSE 500 KV SPARE GSU TRANSFORMER REQUIREMENTS SUMMARY SHEET

(REFERENCE SPECIFICATION SECTION 48 19 23.08 26)

NAMEPLATE DATA:

- TYPE: CLASS II GSU POWER TRANSFORMER
- COOLING CLASS: ONAN/ONAF
- KVA RATING: 164,000 / 218,666
- VOLTAGE RATINGS: 500,000 GRDY (H) - 13,200 DELTA (X) 13,200 DELTA (Y)
- BIL LEVELS, KV: 1,425 (H) / 110 (X & Y) / 150 (H0)
- PHASING: SINGLE-PHASE
- IMPEDANCE: 17.7% @ 82,000 KVA (H-X & H-Y),
- SECONDARY WINDING (H) DETC: 5 TAPS; 3 @ +2.5%, 1 @ -2.5% OF NOMINAL 500 KV TAP
- TEMPERATURE RISE: 65 ºC
- OIL PRESERVATION SYSTEM: NITROGEN BLANKET (PREFERRED) OR CONSTANT OIL PRESSURE SYSTEM
- MAXIMUM SOUND LEVEL (ONAF): 80 DB
- MAXIMUM NO-LOAD LOSSES: 165 KW
- MAXIMUM LOAD LOSSES: 314 KW
- FREQUENCY: 60 HZ
- MAXIMUM WEIGHT: 591,500 POUNDS
- MAXIMUM OIL QUANTITY: 15,539 GALLONS

TANK AND CONSTRUCTION:

- MAN-HOLE: 24-INCH DIAMETER (MINIMUM TWO)
- GASKETS: NITRILE NBR (BUNA-N), DURO 50-60, 25% COMPRESSION, WITH THE EXCEPTION THAT THE LOW-VOLTAGE BUSHING GASKETS SHALL BE FLUROREL ASTOMERIC RUBER. O-RING GASKETS SHALL NOT BE USED FOR GASKET GROOVES OF RECTANGULAR CROSS-SECTION.
- VALVES: STAINLESS STEEL BALL-TYPE (RADIATORS MAY USE BUTTERFLY-TYPE)
- PERSONAL FALL ARREST SYSTEM: THE TOP OF THE TRANSFORMER TANK SHALL BE COVERED WITH A NON-SLIP MATERIAL, THE SAME COLOR AS THE TANK WALLS. A FALL PROTECTION SYSTEM, CONSISTING OF A SINGLE ANCHOR POST, SHALL BE PROVIDED.
- BASE: DESIGNED FOR PAD MOUNTING WITH SEISMIC WELDING TO STEEL PLATES.
- LIFTING EYES: DESIGN LOADS FOR EACH EYE SHALL BE TWO TIMES THE ACTUAL LOAD.
- SEISMIC: SEISMIC CALCULATIONS REQUIRED FOR MAIN TANK AND ALL MAJOR COMPONENTS.
- CORE: LAMINATIONS MAXIMUM THICKNESS OF 0.270MM, COLD-ROLLED, GRAIN-ORIENTED STEEL. MAXIMUM DESIGN FLUX DENSITY OF 1.75 TESLA. STEP-LAP CONSTRUCTION.
- RADIATORS: HOT-DIP GALVANIZED.
- COOLING FANS: HORTIZONTAL-DRAFT
- PROVIDE LOW-VOLTAGE HOUSINGS TO CONNECT THE TRANSFORMER TO THE ISOPHASE BUS COVER THE GOVERNMENT WILL USE THE EXISTING COPPER BUS BARS THAT CONNECT THE LV BUSHING TO THE ISOPHASE BUS WHEN PERMENTLY INSTALLING THE SPARE AT A PROJECT

ACCESSORIES:

- WTI AND OTI GAUGES WITH RTDS - HARDENED FOR HARSH WEATHER CONDITIONS
- DIRECTED-FLOW PRESSURE RELIEF DEVICE WITH METAL DISCHARGE PIPING
- TRANSFORMER EMBEDDED FIBER-OPTIC WINDING TEMPERATURE MEASUREMENT PROBES

BUSHINGS:

- SECONDARY WINDING (H1): 500 KV CLASS, MINIMUM 1,500 KV BIL, 1,600 AMP, OIL-FILLED BUSHING
  HITACHI TYPE O+ C T550W2000VV
  (TWO 1200:5 MRCT)
- PRIMARY WINDING: 25 KV CLASS, MINIMUM 150 KV BIL, 10,000 AMP, PORCELAIN CONSTRUCTION, BULK-TYPE, LOW-CORONA, LIGHT CONTAMINATION, 125 ºC TEMPERATURE RISE RATING
  HITACHI TYPE RJ T025B1000DS
  (BUSHING CURRENT TRANSFORMERS AS REQUIRED FOR THE WINDING TEMPERATURE INDICATING EQUIPMENT)
- NEUTRAL (H0): 25 KV CLASS, MINIMUM 150 KV BIL, 1,200 AMP
  HITACHI TYPE O+ C T025W0412AT
- CORE GROUNDS: 2.5 KV CLASS, 45 KV BIL, 100 AMP

INSULATING OIL:

- TYPE: NAPTHENIC BASE - ASTM D 3487 TYPE II; 0.3% BY MASS OF OXIDATION INHIBITOR

SEPARATE CONTROL AND POWER CABINETS:

- CABINET MATERIAL: WEATHER-PROOF TYPE 304 STAINLESS STEEL WITH LOCKING PROVISIONS. WINDOWS FOR VIEWING THE FUTURE TEMPERATURE MONITOR AND ANNUNCIATOR IN CONTROL CABINET. SOLAR SHIELDING ON TOP, FRONT AND SIDE PANELS OF ENCLOSURES.
- GOVERNMENT-FURNISHED POWER: CONTROL POWER - 125 V DC; ANNUNCIATION POWER - 125 V DC; COOLING FANS - 480 V AC, 3-WIRE, 3-PHASE, 60 HZ
- WIRING: XLPE; 3-PHASE POWER CONDUCTORS COLOR CODED: PHASE A - BROWN; PHASE B - ORANGE; PHASE C - YELLOW; GROUNDED NEUTRAL - WHITE; INSULATED GROUND - GREEN/YELLOW
- CONDUIT: ALL WIRING TO BE RUN IN CONDUIT. WIRE RUNS THROUGH TANK REINFORCING CHANNELS NOT ALLOWED. ALL CONDUIT THREADED JOINTS SHALL HAVE A CONDUCTIVE JOINT COMPOUND APPLIED. OUTLET AND JUNCTION BOXES SHALL BE MALLEABLE CAST IRON WITH CAST COVERS AND LIQUID-TIGHT HUBS. CONDUIT FILL SHALL BE IN ACCORDANCE WITH NFPA 70.
- TERMINAL BLOCKS: 600 V, 30 A MINIMUM, 90 ºC RATED TERMINATIONS.
- AUXILIARY RELAYS:
  - RATED FOR 125 V DC OR 120 V AC; MEETS REQUIREMENTS OF NEMA ICS5; 10 A CONTACTS
  - SINGLE-CONTACT INDUCTIVE LOAD INTERRUPTING CAPACITY: 125 V DC CIRCUITS - 1.0 A; 120 V AC CIRCUITS - 6.0 A
- SWITCHES:
  - RATED FOR 600 V AC OR 250 V DC
  - SINGLE-BREAK INDUCTIVE LOAD INTERRUPTING RATING: 125 V DC CIRCUITS - 1.5 A; 120 V AC CIRCUITS - 10 A
- MOLDED-CASE CIRCUIT BREAKERS:
  - 480 V AC CIRCUITS - RATED 600 V AC AND 18,000 A INTERRUPTING AT 480 VAC
  - 120 V AC CIRCUITS - RATED 250 V DC AND 120/240 OR 240 V AC, AND 10,000 A INTERRUPTING
  - 125 AND 250 V DC CIRCUITS - RATED 125/250 OR 250 V DC, AND 10,000 A INTERRUPTING
- SPECIAL FEATURES:
  - ALL CIRCUITS, WIRING AND EQUIPMENT RATED GREATER THAN 120 V AC TO BE MOUNTED IN POWER CABINET.
  - 120 V AC, 1,000 LUMEN LED TYPE A19 LAMPS WITH DOOR-ACTUATED SWITCH.
  - 120 V AC, 20 A HOSPITAL GRADE GFCI RECEPTACLE MOUNTED INSIDE THE CONTROL CABINET.
  - PTC RESISTOR DESIGN ENCLOSURE HEATERS WITH INTEGRAL FANS, AND INDUSTRIAL GRADE HUMIDISTAT / THERMOSTAT CONTROL.
  - FOLD-DOWN MAINTENANCE TRAY ON INSIDE OF CONTROL CABINET DOOR.
- NAMEPLATES: CAST BRONZE OR STAINLESS STEEL; IEEE C57.12.00, TABLE 7, INCLUDING MANUFACTURING DATE, PLANT LOCATION, GOVERNMENT CONTRACT NUMBER, PRESSURE AND VACUUM THE TANK WILL WITHSTAND, DRY WEIGHT OF THE INSULATION, AND CALCULATED X/R RATIO. AN ADDITIONAL DIAGRAM NAMEPLATE FOR SLING LOCATIONS AND LIFT POSITIONS SHALL ALSO BE PROVIDED. EQUIPMENT NAMEPLATES SHALL BE PROVIDED FOR THE HIGH-VOLTAGE BUSHINGS AND LOW-VOLTAGE BUSHINGS MADE OF STAINLESS STEEL WITH BLACK LETTERING. DEVICE NAMEPLATES WITHIN THE CONTROL AND POWER CABINETS SHALL BE ANODIZED ALUMINUM OR STAINLESS STEEL WITH ENGRAVED BLACK LETTERING.

FACTORY ASSEMBLY AND PAINT:

- ASSEMBLY: TRANSFORMER TO BE FULLY ASSEMBLED, WITH REMOVABLE COMPONENTS MATCH-MARKED FOR EASE OF REASSEMBLY.
- EXTERIOR PAINT: PRIMER COAT, EPOXY BASE COAT, POLYURETHANE TOP COAT - MUNSELL 5BG 7/0.4 HIGH-GLOSS (ANSI NO. 70 GRAY). CORROSION RESISTANT SURFACES, AND STAINLESS STEEL CABINETS, SHALL REMAIN UNPAINTED. COVER TO RECEIVE A NON-SLIP COATING.
- INTERIOR PAINT: PRIMER COAT, OIL-RESISTANT FINISH COAT - WHITE. ALLOW TO CURE FOR ONE WEEK PRIOR TO OIL FILLING.
- INSPECTIONS: GOVERNMENT INSPECTIONS PERFORMED DURING
  (1) DESIGN REVIEW MEETING
  (2) AFTER COMPLETION OF WINDINGS BUT PRIOR TO LANDING ON CORE
  (3) COMPLETED CORE/COIL ASSEMBLY, BUT PRIOR TO TANKING (IF PROVIDING A CORE TYPE TRANSFORMER)
  (4) COMPLETELY ASSEMBLED AND WITNESSING OF FACTORY ACCEPTANCE TESTS

FACTORY ACCEPTANCE TESTS (F.A.T.):

- ALL 'ROUTINE' TESTS (IEEE C57.12.00, TABLE 17)
- TEMPERATURE RISE TESTS SHALL BE PERFORMED AT EACH COOLING STAGE
- LIGHTNING IMPULSE TESTS
- AUDIBLE SOUND LEVEL TESTS SHALL BE PERFORMED
- INDUCED VOLTAGE TEST ACCEPTANCE CRITERIA: 7,200 CYCLE ENHANCEMENT LEVEL: 500 PC; ONE HOUR LEVEL: 300 PC
- LEAKAGE REACTANCE (WITH ELECTRONIC DATA FILES)
- SWEEP FREQUENCY RESPONSE ANALYSIS (WITH ELECTRONIC DATA FILES)
  - CABLE INTEGRITY TEST REQUIRED
  - ONE SFRA TEST TO BE PERFORMED WITH THE TRANSFORMER FULLY ASSEMBLED AND OIL FILLED
  - ONE SFRA TEST TO BE PERFORMED WITH THE TRANSFORMER IN THE SHIPPING CONFIGURATION
- DE-ENERGIZED TAP CHANGER MECHANICAL OPERATIONAL TEST (5 COMPLETE CYCLES)
- ALL ELECTRICAL AND ELECTO-MECHANICAL DEVICES SHALL BE FUNCTIONALLY TESTED
- EACH HIGH-VOLTAGE AND HIGH-VOLTAGE NEUTRAL BUSHING SHALL UNDERGO CAPACITANCE AND POWER FACTOR TESTS DURING TRANSFORMER F.A.T.
- BUSHING CURRENT TRANSFORMER ROUTINE TESTS
- ANALOG TEMPERATURE GAGE FUNCTIONAL VERIFICATION

SPARE PARTS:

- (QTY 1): COMPLETE GASKET SET
- (QTY 1): SET OF GASKETS FOR TRANSFORMER REASSEMBLY
- (QTY 1): RELAY AND CONTACTOR OF EACH TYPE AND RATING
- (QTY 1): PRESSURE RELIEF DEVICE
- (QTY 1): LIQUID LEVEL INDICATOR
- (QTY 1): WINDING TEMPERATURE INDICATOR
- (QTY 1): OIL TEMPERATURE INDICATOR
- (QTY 1): BUSHING CURRENT TRANSFORMER OF EACH TYPE AND RATING
- (QTY 1): ONE RAPID PRESSURE RELAY AND SEAL IN RELAY
- (QTY 2): COOLING FAN COMPLETE WITH MOTOR, CABLES AND CONNECTORS
- (QTY 1): CRATED RADIATOR, COMPLETE WITH INLET AND OUTLET ISOLATION VALVES, VENT AND DRAIN VALVES
- (QTY 3): FIBER OPTIC EXTENSION CABLE THAT CONNECTS THE FEED-THROUGH WALL PLATE LEFT UNCONNECTED
- (QTY 1): FUSE OF EACH TYPE AND RATING
- (QTY 1): PRESSURE REGULATOR (IF SUPPLYING NITROGEN BLANKET TYPE OIL PRESERVATION SYSTEM)
- (QTY 1): BUCHHOLZ RELAY (IF SUPPLYING A COPS TYPE OIL PRESERVATION SYSTEM)
- (QTY 1): VALVE OF EACH SIZE AND TYPE

US Army Corps of Engineers®

MARK	DESCRIPTION	DATE

DESIGNED BY: P. KLEINE, P.E.
DRAWN BY: P. KLEINE, P.E.
CHECKED BY: D. FILER
SUBMITTED BY: JORDAN S. TINKER, P.E.
SIZE: ANSI D
FILE NAME: LG500316b G-004.dgn
ISSUE DATE: OCTOBER 2025
SOLICITATION NO.: W912EF26RA003
CONTRACT NO.:
FILE NUMBER: LGS-1-0-0-A004

U.S. ARMY CORPS OF ENGINEERS
WALLA WALLA DISTRICT
201 N 3RD AVE
WALLA WALLA, WASHINGTON

US ARMY CORPS OF ENGINEERS
HYDROELECTRIC DESIGN CENTER
333 SW 1ST AVE
PORTLAND, OREGON

LITTLE GOOSE LOCK AND DAM
LOWER SNAKE RIVER SPARE TRANSFORMERS
T1

TRANSFORMER EQUIPMENT SUMMARY SHEET

SHEET ID
VOLUME 1
G-004

FINAL

TEMPERATURE EXTREMES LITTLE GOOSE			
RECORDS FROM:	3/1/1908	to	4/4/1983
MAXIMUM RECORDED TEMPERATURE		MAXIMUM DAILY AVERAGE TEMPERATURE	
45 °C	8/4/1961	33.1 °C	7/27/1928
OCCURANCE OF MAXIMUM RECORDED TEMPERATURES		OCCURANCES OF MAX CALCULATED DAILY AVERAGE TEMPERATURES	
DAYS	RANGE, °C	DAYS	RANGE, °C
77	≥ 40	22	≥ 30
1196	35 ≤ to < 40	683	25 ≤ to < 30

ENTIRE TEMPERATURE RECORD IN °C			
	AVG DAILY	AVG DAILY MAX	AVG DAILY MIN
JAN	-1.4	2.4	-5.2
FEB	2.0	6.4	-2.4
MAR	5.7	11.7	-0.2
APR	9.4	16.8	1.9
MAY	13.2	21.5	5.0
JUN	17.2	25.9	8.4
JUL	21.1	31.4	10.8
AUG	20.2	30.5	10.0
SEP	15.7	25.1	6.4
OCT	10.0	17.8	2.2
NOV	3.9	8.7	-0.9
DEC	0.4	4.0	-3.2

1961: YEAR OF HOTTEST DAILY MAX			
	AVG DAILY	AVG DAILY MAX	AVG DAILY MIN
JAN	1.1	4.3	-2.1
FEB	5.6	8.9	2.3
MAR	6.3	11.2	1.5
APR	8.4	14.9	1.8
MAY	12.4	19.9	4.9
JUN	19.4	29.6	9.2
JUL	21.8	32.9	10.7
AUG	22.9	33.9	12.0
SEP	13.5	22.6	4.4
OCT	8.7	16.4	1.0
NOV	0.4	6.9	-6.0
DEC	-0.6	3.4	-4.7

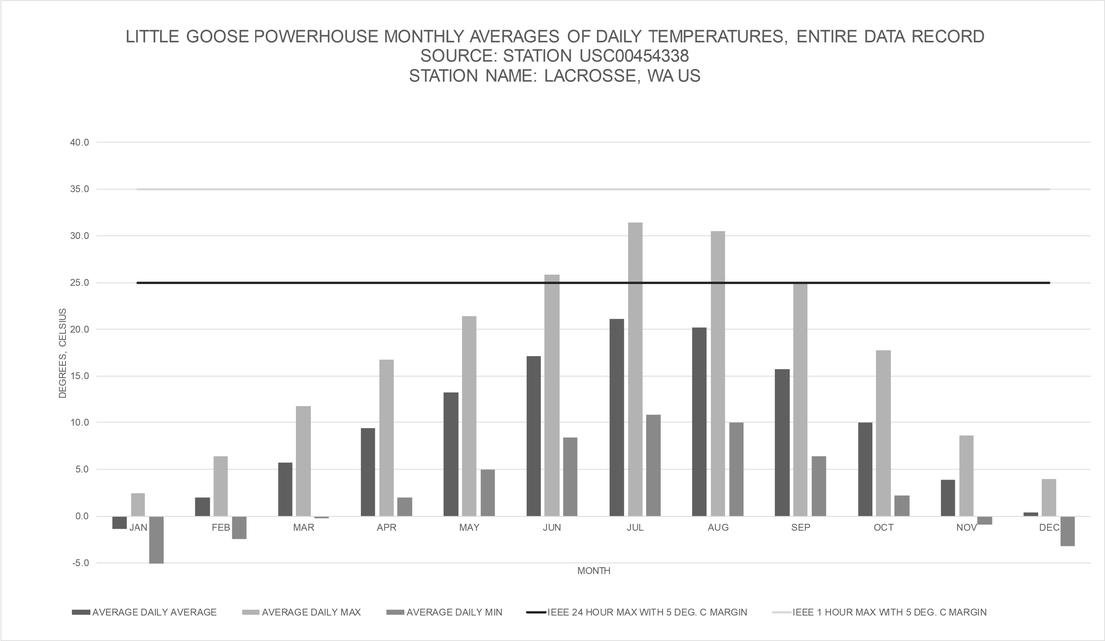

US Army Corps of Engineers®

MARK	DESCRIPTION	DATE

ISSUE DATE: OCTOBER 2025
SOLICITATION NO.: W912EF26RA003
CONTRACT NO.:
FILE NUMBER: LGS-1-G-A-005
DESIGNED BY: P. KLEINE, P.E.
DRAWN BY: P. KLEINE, P.E.
CHECKED BY: D. FILER
SUBMITTED BY: JORDAN S. TINKA, P.E.
SIZE: ANSI D
FILE NAME: LG503118a_G-005.dgn

U.S. ARMY CORPS OF ENGINEERS
WALLA WALLA DISTRICT
201 N 3RD AVE
WALLA WALLA, WASHINGTON

US ARMY CORPS OF ENGINEERS
HYDROELECTRIC DESIGN CENTER
333 SW 1ST AVE
PORTLAND, OREGON

LITTLE GOOSE LOCK AND DAM
LOWER SNAKE RIVER SPARE TRANSFORMERS
T1

REGIONAL TEMPERATURE ANNUAL SUMMARY

SHEET ID
VOLUME 1
G-005

FINAL

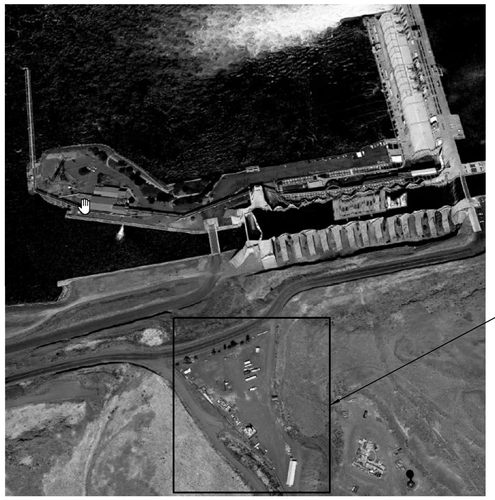

H3 STORAGE YARD MAP VIEW
SCALE: NTS

H13 STORAGE YARD
SCALE: NTS

B2 TRANSFORMER INTAKE DECK
SCALE: NTS

B13 PREVIOUS SPARE TRANSFORMER MOVEMENT ACROSS INTAKE BRIDGE AT LITTLE GOOSE
SCALE: NTS

US Army Corps of Engineers®

MARK	DESCRIPTION	DATE

DESIGNED BY: P. KLEINE, P.E.
DRAWN BY: N. BEEM
CHECKED BY: D. FILER
SUBMITTED BY: JORDAN S. TINKER, P.E.
SIZE: ANSI D
FILE NAME: LG503118a_G-006.dgn
ISSUE DATE: OCTOBER 2025
SOLICITATION NO.: W912EF26RA003
CONTRACT NO.:
FILE NUMBER: LGS-1-0-0-A016

U.S. ARMY CORPS OF ENGINEERS
WALLA WALLA DISTRICT
201 N 3RD AVE
WALLA WALLA, WASHINGTON

US ARMY CORPS OF ENGINEERS
HYDROELECTRIC DESIGN CENTER
333 SW 1ST AVE
PORTLAND, OREGON

LITTLE GOOSE LOCK AND DAM
LOWER SNAKE RIVER SPARE TRANSFORMERS
T1

SITE LOCATION PHOTOGRAPHS

SHEET ID
VOLUME 1
G-006

FINAL

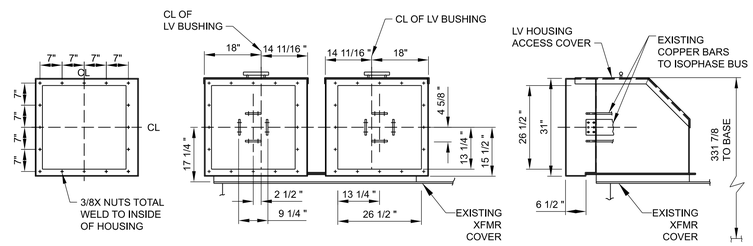

H1 LOW-VOLTAGE BUSHING HOUSINGS

SCALE: 1/2" = 1'-0"

BILL OF MATERIALS

ITEM	QTY	SEGMENT	DESCRIPTION	EXAMPLE	MODEL NUMBER
1	1	COVER	HIGH-VOLTAGE (H1) BUSHING	HITACHI	TYPE O + C T550W2000VV
2	1	COVER	HIGH-VOLTAGE NEUTRAL (H0) BUSHING	HITACHI	TYPE O + C T025W0412AT
3	4	COVER	LOW-VOLTAGE BUSHINGS	HITACHI	BULK, TYPE RJ T025B1000DS
7	AS DES.	COVER	CORE & CORE FRAME GROUND BUSHINGS (SEE FIGURE 2)		
8	AS DES.	1, 2, 4	RADIATORS (TYPICAL)		
9	AS DES.	1, 2, 4	RADIATOR ISOLATION VALVES		
10	AS DES.	1, 2, 4	HORIZONTAL DRAFT COOLING FANS	KRENZ-VENT	
15	1	2	DUAL TANK NITROGEN REGULATOR CABINET	ABB	RND2
16	1	3	CONTROL CABINET		
17	1	3	POWER CABINET		
18	1	3	OIL LEVEL INDICATOR	QUALITROL	042 SERIES
20	5	3	THERMOWELLS (QTY. 3 - STANDARD, QTY. 2 - HEATED)		
21	1	3	RAPID PRESSURE RISE RELAY WITH 1-1/2-INCH ISOLATION VALVE	QUALITROL/MILWAUKEE VALVE	900-FLA & F20 SERIES, SS, CLASS 150
25	1	3	3-INCH MAIN OIL DRAIN VALVE	MILWAUKEE VALVE	F20 SERIES, SS, CLASS 150
26	1	3	1.5-INCH LOWER FILTER VALVE	MILWAUKEE VALVE	
27	1	1	1.5-INCH UPPER FILTER VALVE	MILWAUKEE VALVE	F20 SERIES, SS, CLASS 150
28	1	COVER	3-INCH VACUUM VALVE	MILWAUKEE VALVE	F20 SERIES, SS, CLASS 150
30	2	3	2-INCH GAS-IN-OIL MONITOR INTERFACE VALVES	MILWAUKEE VALVE	F20 SERIES, SS, CLASS 150
33	1	4, COVER	PRESSURE RELIEF DEVICE WITH DISCHARGE PIPING	QUALITROL	XPRD
35	AS DES.	COVER	MANHOLE ACCESS COVER		
42	2	3	COMBINATION JACKING PAD AND LIFTING EYES		
45	AS DES.	COVER	FALL ARREST SYSTEM MOUNTING BRACKETS	DBI-SALA	8517412
70	1	3	AUXILIARY POWER TRANSFORMER		
72	4	COVER	LOW-VOLTAGE BUSHING HOUSINGS (SEE H1 AND A9)		
73	2	1	COMBINATION JACKING PAD, ROCKER, AND LIFTING EYES		
75	1	3	EXTERNAL GAS EXPANSION TANK		

GENERAL NOTES

1. THE TRANSFORMER LAYOUT AND LIMITING DIMENSIONS HAVE BEEN PROVIDED FOR THE MANUFACTURER'S USE IN DESIGNING THE TRANSFORMER FOR PROPER INTERCONNECTION TO THE EXISTING EQUIPMENT AND INTERFACES IN THE TRANSFORMER VAULT. THE LOCATIONS OF THE FOLLOWING TRANSFORMER EQUIPMENT ARE CONSIDERED CRITICAL TO ASSURE PROPER INTERCONNECTION:

   A. HIGH-VOLTAGE BUSHING LOCATION AND TERMINAL CONNECTION
   B. LOW-VOLTAGE BUSHINGS LOCATIONS AND TERMINAL CONNECTIONS
   C. HIGH-VOLTAGE NEUTRAL BUSHING LOCATION AND TERMINAL CONNECTION
   D. LOW-VOLTAGE BUSHING HOUSING DIMENSIONS AND LOCATION OF LOW-VOLTAGE BUS
   E. CONTROL AND POWER CABINETS
   F. ANCILLARY DEVICES
   G. JACKING & LIFTING FACILITIES
   H. STRUCTURAL BASE
   I. MAXIMUM OVERALL WIDTH
   J. MAXIMUM OVERALL LENGTH

2. THE DRAWING SHOWN IS BASED ON THE WESTINGHOUSE SHELL-FORM DRAWINGS WITH AN INERT-GAS OIL PRESERVATION SYSTEM. IF A CORE-FORM TRANSFORMER AND/OR A CONSTANT OIL PRESERVATION SYSTEM IS PROVIDED, THE DIMENSIONAL REQUIREMENTS IDENTIFIED MUST BE MET. THE COPS TANK MUST MAINTAIN A MINIMUM OF 105" CLEARANCE FROM THE OVERHEAD 500KV CONDUCTORS PER IEEE STD 1427. THERE SHALL BE NO MODIFICATIONS TO THE POWERHOUSE EQUIPMENT NEEDED TO FIT THE COPS TANK. IF CONSTANT OIL PRESERVATION SYSTEM IS PROVIDED, ALL ASSOCIATED EQUIPMENT REQUIRED IN SECTION 48 19 23.08 26 FOR A CONSTANT OIL PRESERVATION SYSTEM MUST BE INCLUDED, SUCH AS A MAINTENACE-FREE DEHYDRATING BREATHER, AND BUCHHOLZ RELAY.

3. THE RADIATORS AS DEPICTED INDICATE THE PERMISSIBLE LOCATIONS, AND ARE NOT INTENDED TO INDICATE THE ACTUAL QUANTITY.

4. PROVIDE WEATHER PROOF LV HOUSINGS WITH ACCESS COVER THAT ARE EASY TO REMOVE AND ALLOWS ACCESS TO THE LV BUSHINGS AND THE FLEXIBLE CABLES THAT CONNECT TO THE ISOPHASE BUS. THE EXISTING COPPER BUS BARS WILL BE REUSED TO CONNECT THE BUSHING TO THE ISOPHASE BUS AND FLEXIBLE CONDUCTORS. SEE SECTION H1 AND A9.

5. MAXIMUM WEIGHT: 591,500 POUNDS

6. SEE RESOURCE DRAWINGS FOR PAD DETAILS.

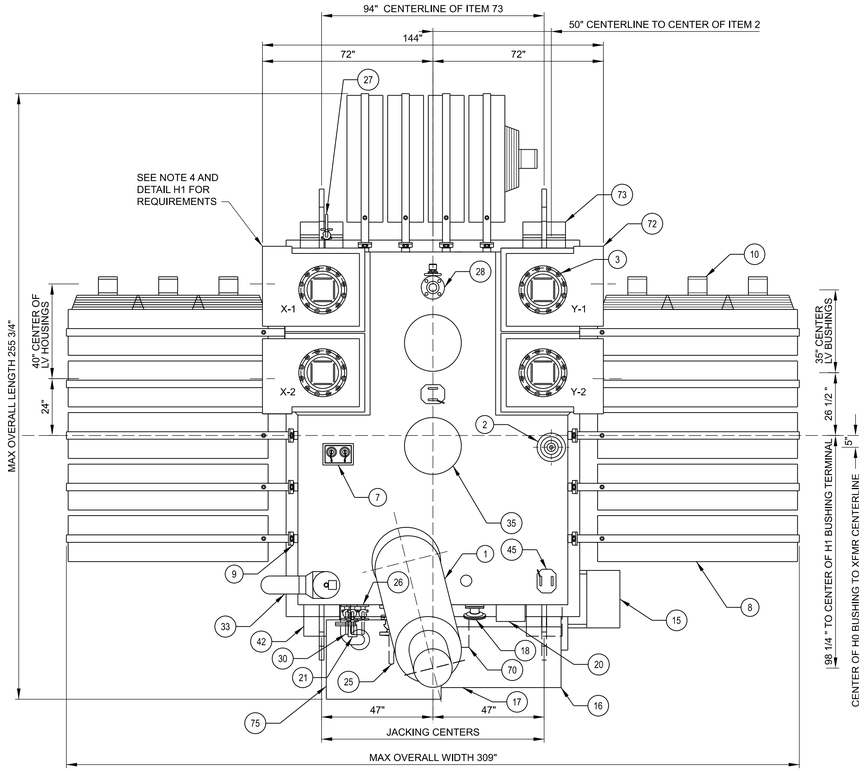

A1 TRANSFORMER COVER

SCALE: 3/8"=1'-0"

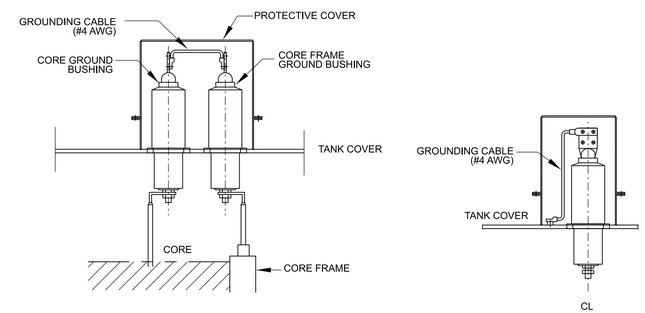

E10 CORE AND CORE FRAME GROUNDING

SCALE: NTS

A9 EXISTING LV BUSHING BUS BARS

SCALE: NTS

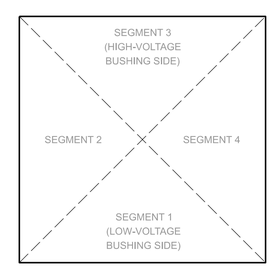

A17 TRANSFORMER TANK SEGMENT IDENTIFICATION (TOP VIEW)

SCALE: NTS

US Army Corps of Engineers®

MARK	DESCRIPTION	DATE

DESIGNED BY: P. KLEINE, P.E.
DRAWN BY: P. KLEINE, P.E.
CHECKED BY: D. FILER
SUBMITTED BY: JORDAN S. TINKA, P.E.
SIZE: ANSI D
FILE NUMBER: LGS-1-6-1E401
FILENAME: LGS03118a_E-101.dgn

U.S. ARMY CORPS OF ENGINEERS
WALLA WALLA DISTRICT
201 N 3RD AVE
WALLA WALLA, WASHINGTON

US ARMY CORPS OF ENGINEERS
HYDROELECTRIC DESIGN CENTER
333 SW 1ST AVE
PORTLAND, OREGON

LITTLE GOOSE LOCK AND DAM
LOWER SNAKE RIVER SPARE TRANSFORMERS
T1

GENERATOR STEP-UP TRANSFORMER
TOP VIEW

SHEET ID
VOLUME 1
E-101

FINAL

BILL OF MATERIALS

ITEM	QTY	SEGMENT	DESCRIPTION	EXAMPLE	MODEL NUMBER
1	1	COVER	HIGH-VOLTAGE (H1) BUSHING	HITACHI	TYPE O+ C T550W2000VV
3	4	COVER	LOW-VOLTAGE BUSHINGS	HITACHI	BULK, TYPE RJ T025B1000DS
8	AS DES.	1, 2, 4	RADIATORS (TYPICAL)		
9	AS DES.	1, 2, 4	RADIATOR ISOLATION VALVES		
10	AS DES.	1, 2, 4	HORIZONTAL DRAFT COOLING FANS	KRENZ-VENT	
27	1	1	1.5-INCH UPPER FILTER VALVE	MILWAUKEE VALVE	F20 SERIES, SS, CLASS 150
28	1	COVER	3-INCH VACUUM VALVE	MILWAUKEE VALVE	F20 SERIES, SS, CLASS 150
43	AS DES.	BASE	STRUCTURAL BASE		
49	4	1,3	GROUNDING PADS (TYPICAL)		
72	4	COVER	LOW-VOLTAGE BUSHING HOUSINGS		
73	2	1	COMBINATION JACKING PAD, ROCKER AND LIFTING EYES		

GENERAL NOTES

1. THE TRANSFORMER LAYOUT AND LIMITING DIMENSIONS HAVE BEEN PROVIDED FOR THE MANUFACTURER'S USE IN DESIGNING THE TRANSFORMER FOR PROPER INTERCONNECTION TO THE EXISTING EQUIPMENT AND INTERFACES IN THE TRANSFORMER VAULT. THE LOCATIONS OF THE FOLLOWING TRANSFORMER EQUIPMENT ARE CONSIDERED CRITICAL TO ASSURE PROPER INTERCONNECTION:

   A. HIGH-VOLTAGE BUSHING LOCATION AND TERMINAL CONNECTION
   B. HIGH-VOLTAGE NEUTRAL BUSHING LOCATION AND TERMINAL CONNECTION
   C. LOW-VOLTAGE BUSHINGS LOCATIONS AND TERMINAL CONNECTIONS
   D. LOW VOLTAGE BUSHING HOUSING DIMENSIONS AND LOCATION OF LOW VOLTAGE BUS
   E. CONTROL AND POWER CABINETS
   F. ANCILLARY DEVICES
   G. JACKING & LIFTING FACILITIES
   H. STRUCTURAL BASE
   I. MAXIMUM OVERALL WIDTH

2. THE DRAWING SHOWN IS BASED ON THE WESTINGHOUSE SHELL-FORM DRAWINGS WITH AN INERT-GAS OIL PRESERVATION SYSTEM. IF A CORE-FORM TRANSFORMER AND/OR A CONSTANT OIL PRESERVATION SYSTEM IS PROVIDED, THE DIMENSIONAL REQUIREMENTS IDENTIFIED MUST BE MET. THE COPS TANK MUST MAINTAIN A MINIMUM OF 105" CLEARANCE FROM THE OVERHEAD 500KV CONDUCTORS PER IEEE STD 1427. THERE SHALL BE NO MODIFICATIONS TO THE POWERHOUSE EQUIPMENT NEEDED TO FIT THE COPS TANK. IF CONSTANT OIL PRESERVATION SYSTEM IS PROVIDED, ALL ASSOCIATED EQUIPMENT REQUIRED IN SECTION 48 19 23.08 26 FOR A CONSTANT OIL PRESERVATION SYSTEM MUST BE INCLUDED. SUCH AS A MAINTENACE-FREE DEHYDRATING BREATHER, AND BUCHHOLZ RELAY.

3. THE RADIATORS AS DEPICTED INDICATE THE PERMISSIBLE LOCATIONS, AND ARE NOT INTENDED TO INDICATE THE ACTUAL QUANTITY.

4. PROVIDE LOW-VOLTAGE BUSHING HOUSINGS AS INDICATED. SEE SECTION H1 ON SHEET E-101 FOR DIMENSIONAL REQUIREMENTS AND DETAILS.

5. MAXIMUM WEIGHT: 591,500 POUNDS

6. SEE RESOURCE DRAWINGS FOR PAD DETAILS.

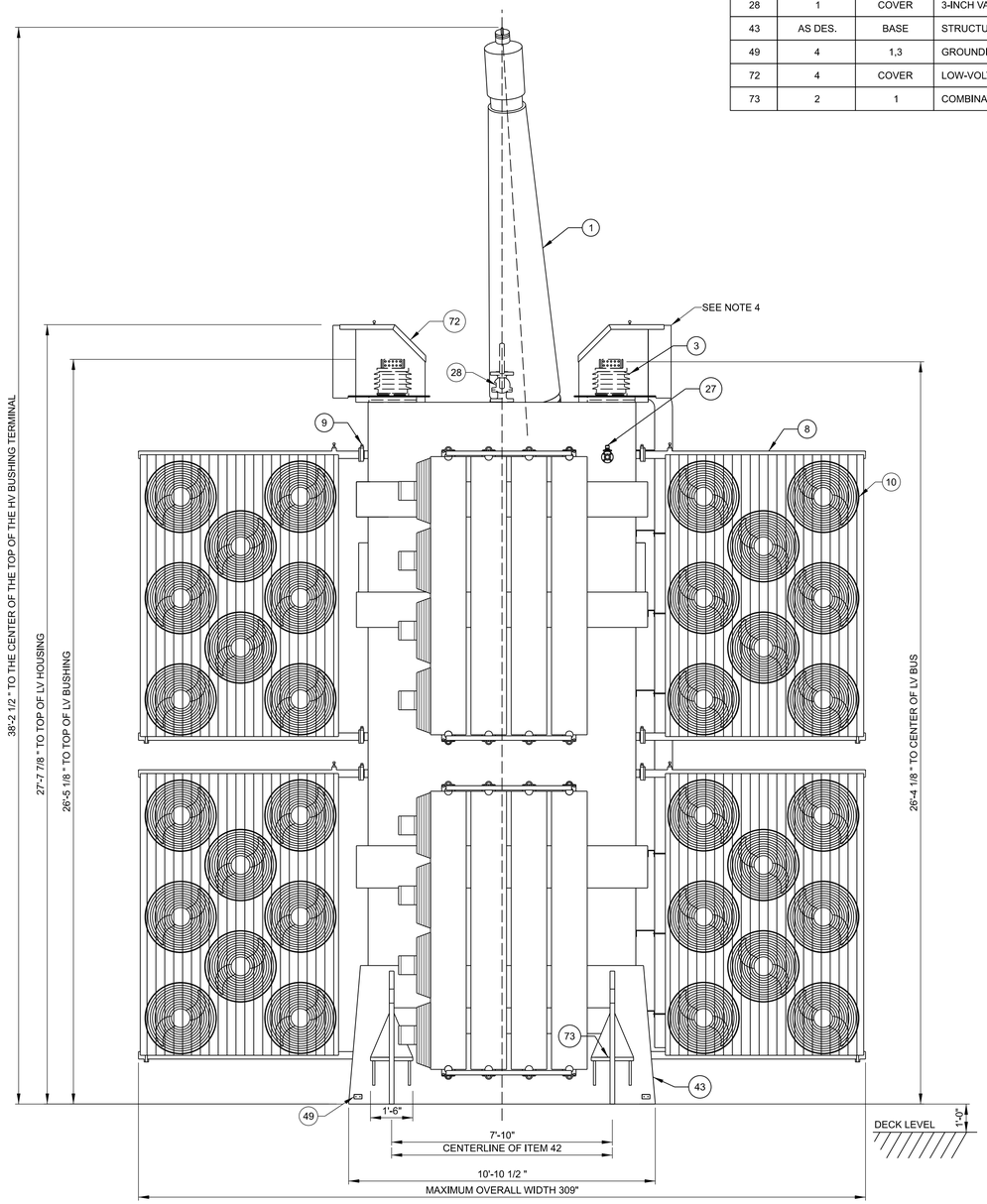

A1 TRANSFORMER ELEVATION VIEW- SEGMENT 1
SCALE: 3/8" = 1'-0"

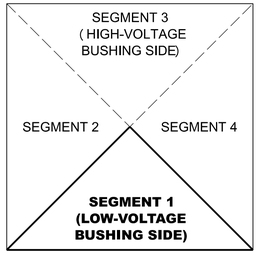

A13 FIGURE 1 - TRANSFORMER TANK SEGMENT IDENTIFICATION (TOP VIEW)
SCALE: NTS

US Army Corps of Engineers®

MARK	DESCRIPTION	DATE

DESIGNED BY: P. KLEINE, P.E.	ISSUE DATE: OCTOBER 2025
DRAWN BY: P. KLEINE, P.E.	SOLICITATION NO.: W912EF26RA003
CHECKED BY: D. FILER	CONTRACT NO.:
SUBMITTED BY: JORDAN S. TINKLE, P.E.	FILE NUMBER: LGS-1-6-1E40/2
SIZE: ANSI D	FILE NAME: LGS03116s_E-102.dgn

U.S. ARMY CORPS OF ENGINEERS
WALLA WALLA DISTRICT
201 N 3RD AVE
WALLA WALLA, WASHINGTON

US ARMY CORPS OF ENGINEERS
HYDROELECTRIC DESIGN CENTER
333 SW 1ST AVE
PORTLAND, OREGON

LITTLE GOOSE LOCK AND DAM
LOWER SNAKE RIVER SPARE TRANSFORMERS
T1

GENERATOR STEP-UP TRANSFORMER
LAYOUT AND LIMITING DIMENSIONS
SEGMENT 1

SHEET ID
VOLUME 1
E-102

FINAL

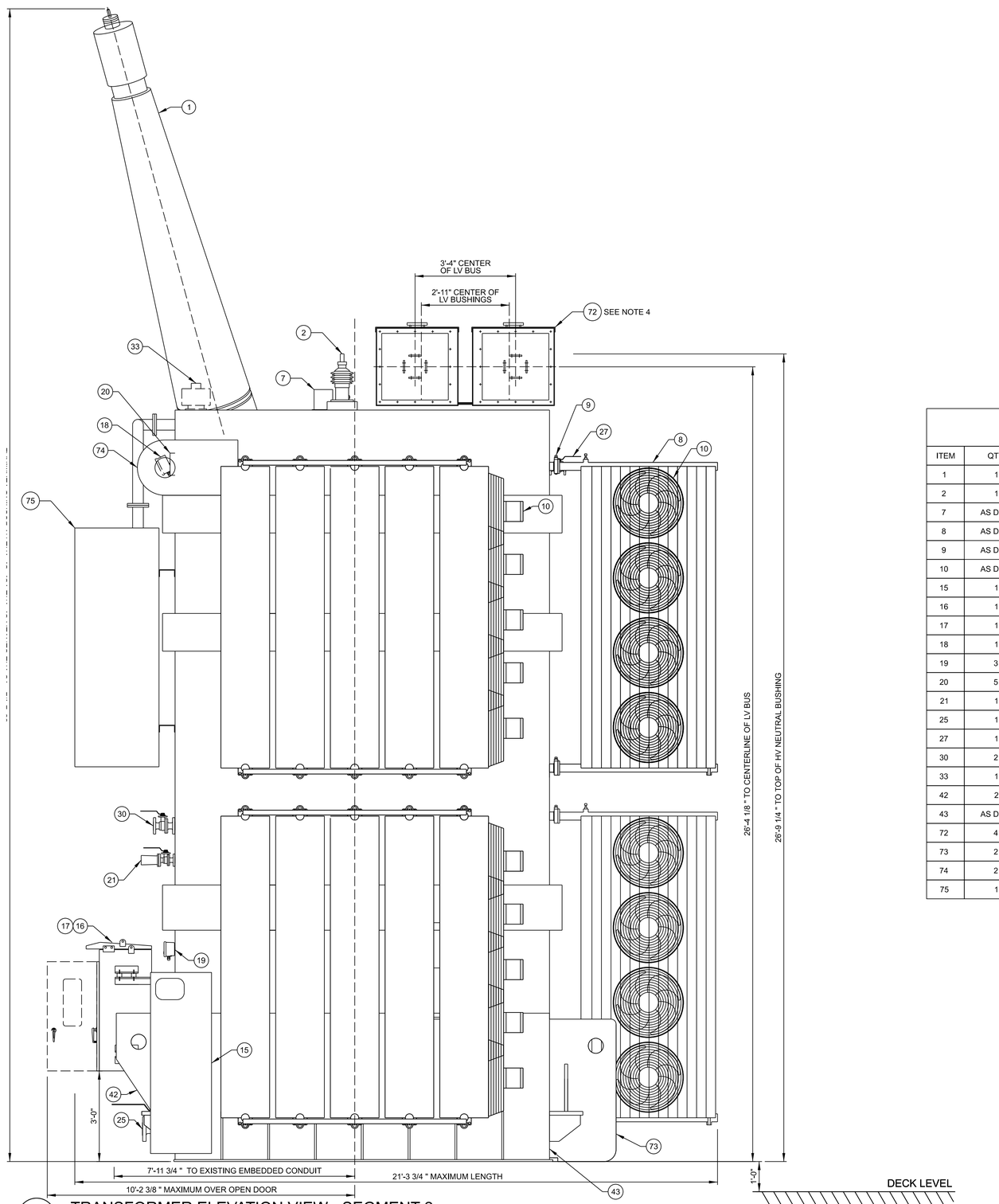

A1 TRANSFORMER ELEVATION VIEW - SEGMENT 2

SCALE: 1/2"=1'-0"

GENERAL NOTES

1. THE TRANSFORMER LAYOUT AND LIMITING DIMENSIONS HAVE BEEN PROVIDED FOR THE MANUFACTURER'S USE IN DESIGNING THE TRANSFORMERS FOR PROPER INTERCONNECTION TO THE EXISTING EQUIPMENT AND INTERFACES IN THE TRANSFORMER VAULT. THE LOCATIONS OF THE FOLLOWING TRANSFORMER EQUIPMENT ARE CONSIDERED CRITICAL TO ASSURE PROPER INTERCONNECTION:

   A. HIGH-VOLTAGE BUSHING LOCATION AND TERMINAL CONNECTION
   B. LOW-VOLTAGE BUSHING LOCATIONS AND TERMINAL CONNECTIONS
   C. HIGH-VOLTAGE NEUTRAL BUSHING LOCATION AND TERMINAL CONNECTION
   D. LOW-VOLTAGE BUSHING HOUSINGS DIMENSIONS AND LOCATIONS OF LOW-VOLTAGE BUS
   E. CONTROL AND POWER CABINETS
   F. ANCILLARY DEVICES
   G. JACKING & LIFTING FACILITIES
   H. STRUCTURAL BASE
   H. MAXIMUM OVERALL LENGTH
   I. LOCATION OF EXISTING EMBEDDED CONDUIT COMPARED TO THE CONTROL AND POWER CABINET

2. THE DRAWING SHOWN IS BASED ON THE WESTINGHOUSE SHELL-FORM DRAWINGS WITH AN INERT-GAS OIL PRESERVATION SYSTEM. IF A CORE-FORM TRANSFORMER AND/OR A CONSTANT OIL PRESERVATION SYSTEM IS PROVIDED, THE DIMENSIONAL REQUIREMENTS IDENTIFIED MUST BE MET. THE COPS TANK MUST MAINTAIN A MINIMUM OF 105" CLEARANCE FROM THE OVERHEAD 500KV CONDUCTORS PER IEEE STD 1427. THERE SHALL BE NO MODIFICATIONS TO THE POWERHOUSE EQUIPMENT NEEDED TO FIT THE COPS TANK. IF CONSTANT OIL PRESERVATION SYSTEM IS PROVIDED, ALL ASSOCIATED EQUIPMENT REQUIRED IN SECTION 48 19 23.08 26 FOR A CONSTANT OIL PRESERVATION SYSTEM MUST BE INCLUDED, SUCH AS A MAINTENACE-FREE DEHYDRATING BREATHER, AND BUCHHOLZ RELAY.

3. THE RADIATORS AS DEPICTED INDICATE THE PERMISSIBLE LOCATIONS, AND ARE NOT INTENDED TO INDICATE THE ACTUAL QUANTITY.

4. PROVIDE LOW-VOLTAGE BUSHING HOUSINGS AS INDICATED. SEE SECTION H1 ON SHEET E-101 FOR DIMENSIONAL REQUIREMENTS AND DETAILS.

5. MAXIMUM WEIGHT: 591,500 POUNDS

6. SEE RESOURCE DRAWINGS FOR PAD DETAILS.

BILL OF MATERIALS

ITEM	QTY	SEGMENT	DESCRIPTION	EXAMPLE	MODEL NUMBER
1	1	COVER	HIGH-VOLTAGE (H1) BUSHING	HITACHI	TYPE O + C T550W2000VV
2	1	COVER	HIGH-VOLTAGE NEUTRAL (H0) BUSHING	HITACHI	TYPE O + C TO25W0412AT
7	AS DES.	COVER	CORE & CORE FRAME GROUND BUSHINGS		
8	AS DES.	1, 2, 4	RADIATORS (TYPICAL)		
9	AS DES.	1, 2, 4	RADIATOR ISOLATION VALVES		
10	AS DES.	1, 2, 4	HORIZONTAL DRAFT COOLING FANS	KRENZ-VENT	
15	1	1	DUAL TANK NITROGEN REGULATOR CABINET	ABB	RND2
16	1	3	CONTROL CABINET		
17	1	3	POWER CABINET		
18	1	3	OIL LEVEL INDICATOR	QUALITROL	042 SERIES
19	3	3	ANALOG TEMPERATURE INDICATORS	QUALITROL	TR6000 SERIES
20	5	3	THERMOWELLS (QTY. 3 - STANDARD, QTY. 2 - HEATED)		
21	1	3	RAPID PRESSURE RISE RELAY WITH 1-1/2-INCH ISOLATION VALVE	QUALITROL/MILWAUKEE VALVE	900-FLA & F20 SERIES, SS, CLASS 150
25	1	3	3-INCH MAIN OIL DRAIN VALVE	MILWAUKEE VALVE	F20 SERIES, SS, CLASS 150
27	1	1	1.5-INCH UPPER FILTER VALVE	MILWAUKEE VALVE	F20 SERIES, SS, CLASS 150
30	2	3	2-INCH GAS-IN-OIL MONITOR INTERFACE VALVES	MILWAUKEE VALVE	F20 SERIES, SS, CLASS 150
33	1	4, COVER	PRESSURE RELIEF DEVICE WITH DISCHARGE PIPING	QUALITROL	XRPD
42	2	3	COMBINATION JACKING PAD, AND LIFTING EYES		
43	AS DES.	BASE	STRUCTURAL BASE		
72	4	COVER	LOW-VOLTAGE BUSHING HOUSINGS		
73	2	1	COMBINATION JACKING PAD, ROCKER, & LIFTING EYES		
74	2	3	LIFTING EYES FOR UPRIGHTING THE TRANSFORMER		
75	1	3	EXTERNAL GAS EXPANSION TANK		

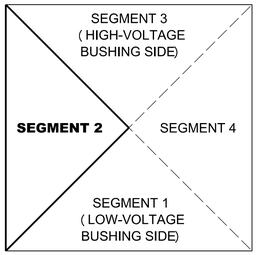

A16 FIGURE 1 - TRANSFORMER TANK SEGMENT IDENTIFICATION (TOP VIEW)

SCALE: NTS

US Army Corps of Engineers®

MARK	DESCRIPTION	DATE

DESIGNED BY: P. KLEINE, P.E.
DRAWN BY: P. KLEINE, P.E.
CHECKED BY: D. FILER
SUBMITTED BY: JORDAN S. TINKLE, P.E.
SIZE: ANSI D
FILE NAME: LGS03116a_E-103.dgn
ISSUE DATE: OCTOBER 2025
SOLICITATION NO.: W912EF26RA003
CONTRACT NO.:
FILE NUMBER: LGS-1-6-E4/03

U.S. ARMY CORPS OF ENGINEERS
WALLA WALLA DISTRICT
201 N 3RD AVE
WALLA WALLA, WASHINGTON

US ARMY CORPS OF ENGINEERS
HYDROELECTRIC DESIGN CENTER
333 SW 1ST AVE
PORTLAND, OREGON

LITTLE GOOSE LOCK AND DAM
LOWER SNAKE RIVER SPARE TRANSFORMERS
T1

GENERATOR STEP-UP TRANSFORMER
LAYOUT AND LIMITING DIMENSIONS
SEGMENT 2

SHEET ID
VOLUME 1
E-103

FINAL

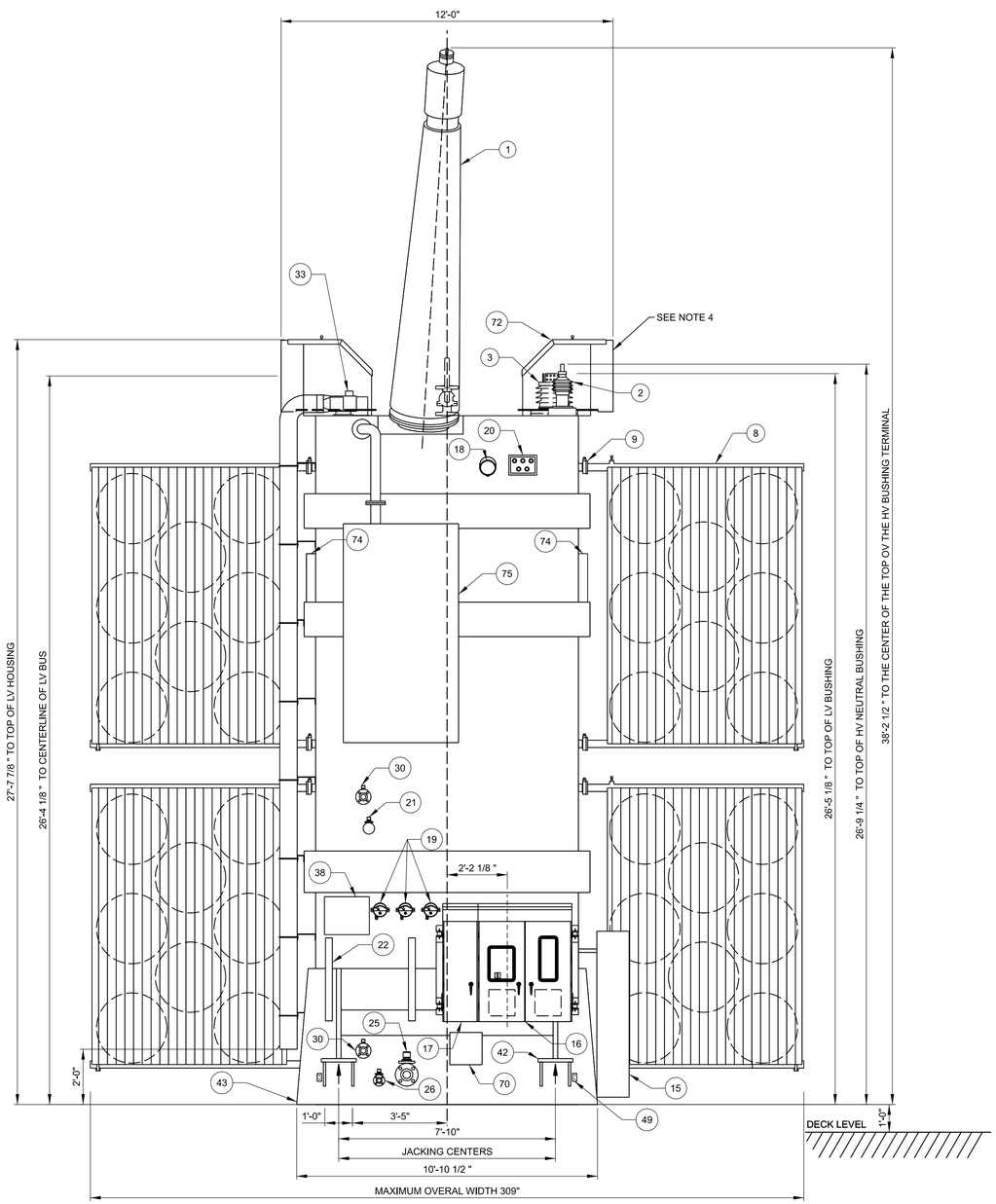

A1 SEGMENT 3
SCALE: 3/8"=1'-0"

GENERAL NOTES (CONT)

4. PROVIDE LOW-VOLTAGE BUSHING HOUSINGS AS INDICATED. SEE DETAIL H1 ON SHEET E-101 FOR DIMENSIONAL REQUIREMENTS AND DETAILS.

5. MAXIMUM WEIGHT: 591,500 POUNDS

6. SEE RESOURCE DRAWINGS FOR PAD DETAILS.

GENERAL NOTES

1. THE TRANSFORMER LAYOUT AND LIMITING DIMENSIONS HAVE BEEN PROVIDED FOR THE MANUFACTURER'S USE IN DESIGNING THE TRANSFORMER FOR PROPER INTERCONNECTION TO THE EXISTING EQUIPMENT AND INTERFACES IN THE TRANSFORMER VAULT. THE LOCATIONS OF THE FOLLOWING TRANSFORMER EQUIPMENT ARE CONSIDERED CRITICAL TO ASSURE PROPER INTERCONNECTION:

   A. HIGH-VOLTAGE BUSHING LOCATION AND TERMINAL CONNECTION
   B. LOW-VOLTAGE BUSHING LOCATIONS AND TERMINAL CONNECTIONS
   C. HIGH-VOLTAGE NEUTRAL BUSHING LOCATION AND TERMINAL CONNECTION
   D. LOW-VOLTAGE BUSHING HOUSING DIMENSIONS AND LOCATION OF LOW VOLTAGE BUS
   E. CONTROL AND POWER CABINETS
   F. ANCILLARY DEVICES
   G. JACKING FACILITIES
   H. STRUCTURAL BASE INCLUDING WIDTH
   I. MAXIMUM OVERAL WIDTH

2. THE DRAWING SHOWN IS BASED ON THE WESTINGHOUSE SHELL-FORM DRAWINGS WITH AN INERT-GAS OIL PRESERVATION SYSTEM. IF A CORE-FORM TRANSFORMER AND/OR A CONSTANT OIL PRESERVATION SYSTEM IS PROVIDED, THE DIMENSIONAL REQUIREMENTS IDENTIFIED MUST BE MET. THE COPS TANK MUST MAINTAIN A MINIMUM OF 105" CLEARANCE FROM THE OVERHEAD 500KV CONDUCTORS PER IEEE STD 1427. THERE SHALL BE NO MODIFICATIONS TO THE POWERHOUSE EQUIPMENT NEEDED TO FIT THE COPS TANK. IF CONSTANT OIL PRESERVATION SYSTEM IS PROVIDED, ALL ASSOCIATED EQUIPMENT REQUIRED IN SECTION 48 19 23.08 26 FOR A CONSTANT OIL PRESERVATION SYSTEM MUST BE INCLUDED, SUCH AS A MAINTENACE-FREE DEHYDRATING BREATHER, AND BUCHHOLZ RELAY.

3. THE RADIATORS AS DEPICTED INDICATE THE PERMISSIBLE LOCATIONS, AND ARE NOT INTENDED TO INDICATE THE ACTUAL QUANTITY.

BILL OF MATERIALS

ITEM	QTY	SEGMENT	DESCRIPTION	EXAMPLE	MODEL NUMBER
1	1	COVER	HIGH-VOLTAGE (H1) BUSHING	HITACHI	TYPE O + C T550W2000VV
2	1	COVER	HIGH-VOLTAGE NEUTRAL (H0) BUSHING	HITACHI	TYPE O + C T025W0412AT
3	4	COVER	LOW-VOLTAGE BUSHINGS	HITACHI	BULK, TYPE RJ TO25B1000DS
8	AS DES	1, 2, 4	RADIATORS (TYPICAL)		
9	AS DES	1, 2, 4	RADIATOR ISOLATION VALVES		
15	1	2	DUAL TANK NITROGEN REGULATOR CABINET	ABB	RND2
16	1	3	CONTROL CABINET		
17	1	3	POWER CABINET		
18	1	3	OIL LEVEL INDICATOR	QUALITROL	042 SERIES
19	3	3	ANALOG TEMPERATURE GAUGES	QUALITROL	TR6000 SERIES
20	5	3	THERMOWELLS (QTY 3 - STANDARD, QTY 2 - HEATED)		
21	1	3	RAPID PRESSURE RISE RELAY WITH 1-1/2-INCH ISOLATION VALVE	QUALITROL/MILWAUKEE VALVE	900-FLA & F20 SERIES, SS, CLASS 150
22	2	2	MOUNTING BRACKETS FOR FUTURE ON-LINE DGA MONITOR		
25	1	3	3-INCH MAIN OIL DRAIN VALVE	MILWAUKEE VALVE	F20 SERIES, SS, CLASS 150
26	1	3	1.5-INCH LOWER FILTER VALVE	MILWAUKEE VALVE	F20 SERIES, SS, CLASS 150
30	2	3	2-INCH GAS-IN-OIL MONITOR ISOLATION VALVES	MILWAUKEE VALVE	F20 SERIES, SS, CLASS 150
33	1	4, COVER	PRESSURE RELIEF DEVICE WITH DISCHARGE PIPING	QUALITROL	XRPD
38	1	3	TRANSFORMER NAMEPLATE		
42	2	3	COMBINATION JACKING PAD, AND LIFTING EYES		
43	AS DES	BASE	STRUCTURAL BASE		
49	4	1,3	GROUNDING PADS (TYPICAL)		
70	1	3	AUXILIARY POWER TRANSFORMER		
72	4	COVER	LOW-VOLTAGE BUSHING HOUSINGS		
74	2	3	LIFTING EYES FOR UPRIGHTING THE TRANSFORMER		
75	1	3	EXTERNAL GAS EXPANSION TANK		

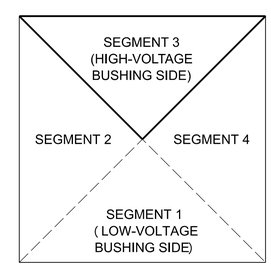

A16 FIGURE 1 - TRANSFORMER TANK SEGMENT IDENTIFICATION (TOP VIEW)
SCALE: NTS

US Army Corps of Engineers®

MARK	DESCRIPTION	DATE

ISSUE DATE: OCTOBER 2025
SOLICITATION NO.: W912EF26RA003
CONTRACT NO.:
FILE NUMBER: LGS-1-6-1E40/4

DESIGNED BY: P. KLEINE, P.E.
DRAWN BY: P. KLEINE, P.E.
CHECKED BY: D. FILER
SUBMITTED BY: JORDAN S. FINK, P.E.
SIZE: ANSI D
FILE NAME: LGS0318a E-104.dgn

U.S. ARMY CORPS OF ENGINEERS
WALLA WALLA DISTRICT
201 N 3RD AVE
WALLA WALLA, WASHINGTON

US ARMY CORPS OF ENGINEERS
HYDROELECTRIC DESIGN CENTER
333 SW 1ST AVE
PORTLAND, OREGON

LITTLE GOOSE LOCK AND DAM
LOWER SNAKE RIVER SPARE TRANSFORMERS
T1

GENERATOR STEP-UP TRANSFORMER
LAYOUT AND LIMITING DIMENSIONS
SEGMENT 3

SHEET ID
VOLUME 1
E-104

FINAL

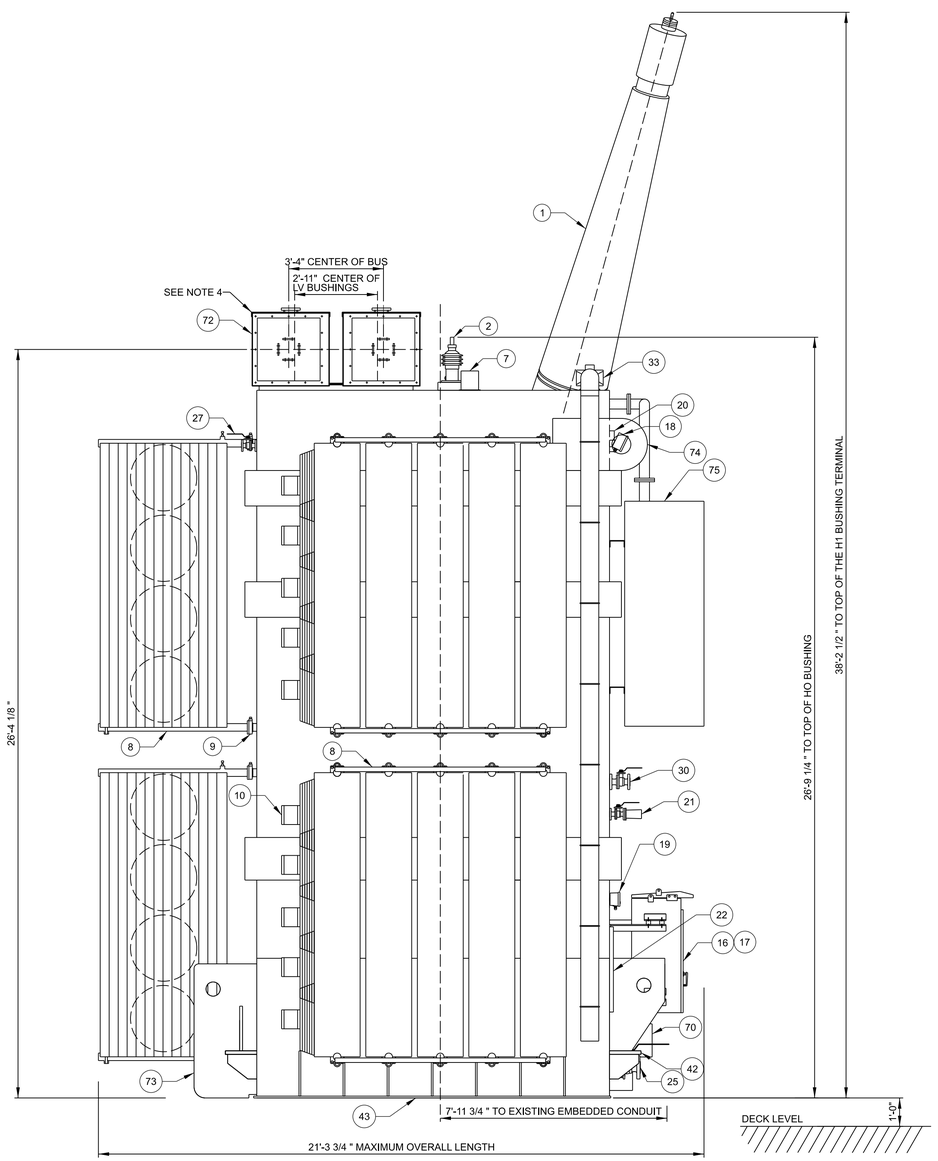

A2 TRANSFORMER ELEVATION VIEW - SEGMENT 4

SCALE: 1/2"=1'-0"

GENERAL NOTES

1. THE TRANSFORMER LAYOUT AND LIMITING DIMENSIONS HAVE BEEN PROVIDED FOR THE MANUFACTURER'S USE IN DESIGNING THE TRANSFORMER FOR PROPER INTERCONNECTION TO THE EXISTING EQUIPMENT AND INTERFACES IN THE TRANSFORMER VAULT. THE LOCATIONS OF THE FOLLOWING TRANSFORMER EQUIPMENT ARE CONSIDERED CRITICAL TO ASSURE PROPER INTERCONNECTION:

   A. HIGH-VOLTAGE BUSHING LOCATION AND TERMINAL CONNECTION
   B. HIGH-VOLTAGE NEUTRAL BUSHING LOCATION AND TERMINAL CONNECTION
   C. LOW-VOLTAGE BUSHINGS LOCATIONS AND TERMINAL CONNECTIONS
   D. LOW VOLTAGE BUSHING HOUSING DIMENSIONS AND LOCATION OF LOW VOLTAGE BUS
   E. CONTROL AND POWER CABINETS
   F. ANCILLARY DEVICES
   G. JACKING & LIFTING FACILITIES
   H. STRUCTURAL BASE
   I. MAXIMUM OVERALL LENGTH
   J. LOCATION OF EMBEDDED CONDUIT

2. THE DRAWING SHOWN IS BASED ON THE WESTINGHOUSE SHELL-FORM DRAWINGS WITH AN INERT-GAS OIL PRESERVATION SYSTEM. IF A CORE-FORM TRANSFORMER AND/OR A CONSTANT OIL PRESERVATION SYSTEM IS PROVIDED, THE DIMENSIONAL REQUIREMENTS IDENTIFIED MUST BE MET. THE COPS TANK MUST MAINTAIN A MINIMUM OF 105" CLEARANCE FROM THE OVERHEAD 500KV CONDUCTORS PER IEEE STD 1427. THERE SHALL BE NO MODIFICATIONS TO THE POWERHOUSE EQUIPMENT NEEDED TO FIT THE COPS TANK. IF CONSTANT OIL PRESERVATION SYSTEM IS PROVIDED, ALL ASSOCIATED EQUIPMENT REQUIRED IN SECTION 48 19 23.08 26 FOR A CONSTANT OIL PRESERVATION SYSTEM MUST BE INCLUDED, SUCH AS A MAINTENACE-FREE DEHYDRATING BREATHER, AND BUCHHOLZ RELAY.

3. THE RADIATORS AS DEPICTED INDICATE THE PERMISSIBLE LOCATIONS, AND ARE NOT INTENDED TO INDICATE THE ACTUAL QUANTITY.

4. PROVIDE LOW-VOLTAGE BUSHING HOUSINGS AS INDICATED. SEE SECTION H1 ON SHEET E-101 FOR DIMENSIONAL REQUIREMENTS AND DETAILS.

5. MAXIMUM WEIGHT: 591,500 POUNDS

6. SEE RESOURCE DRAWINGS FOR PAD DETAILS.

BILL OF MATERIALS

ITEM	QTY	SEGMENT	DESCRIPTION	EXAMPLE	MODEL NUMBER
1	1	COVER	HIGH-VOLTAGE (H1) BUSHING	ABB-HITACHI	TYPE O + C T550W2000VV
2	1	COVER	HIGH-VOLTAGE NEUTRAL (H0) BUSHING	ABB-HITACHI	TYPE O + C T025W0412AT
7	AS DES.	COVER	CORE & CORE FRAME GROUND BUSHINGS		
8	AS DES.	1,2,4	RADIATORS (TYPICAL)		
9	AS DES.	1,2,4	RADIATOR ISOLATION VALVES		
10	AS DES.	COVER	HORIZONTAL DRAFT COOLING FANS (TYPICAL)	KRENZ-VENT	
16	1	3	CONTROL CABINET		
17	1	3	POWER CABINET		
18	1	3	OIL LEVEL INDICATOR	QUALITROL	042 SERIES
19	1	3	ANALOG TEMPERATURE GAUGES	QUALITROL	TR6000 SERIES
20	5	3	THERMOWELLS (QTY. 3 - STANDARD, QTY. 2 HEATED)		
21	1	3	RAPID PRESSURE RISE RELAY WITH 1-1/2-INCH ISOLATION BALL VALVE	QUALITROL/MILWAUKEE VALVE	900-FLA &F20 SERIES, SS, CLASS 150
22	2	3	MOUNTING BRACKETS FOR FUTURE ON-LINE DGA MONITOR		
25	1	3	3-INCH MAIN DRAIN	MILWAUKEE VALVE	F20 SERIES, SS, CLASS 150
27	1	1	1-1/2-INCH UPPER FILTER VALVE	MILWAUKEE VALVE	F20 SERIES, SS, CLASS 150
30	2	3	2-INCH DISSOLVED GAS-IN-OIL MONITOR INTERFACE VALVES	MILWAUKEE VALVE	F20 SERIES, SS, CLASS 150
33	1	4,COVER	PRESSURE RELIEF DEVICE WITH DISCHARGE PIPING	QUALITROL	XPRD
42	2	3	COMBINED JACK PAD, AND LIFTING EYES		
43	AS DES.	BASE	STRUCTURAL BASE		
70	1	3	AUXILIARY POWER TRANSFORMER		
72	4	COVER	LOW-VOLTAGE BUSHING HOUSINGS		
73	2	1	COMBINED JACK PAD, ROCKER, AND LIFTING EYES		
74	2	3	LIFTING EYES FOR UPRIGHTING THE TRANSFORMER		
75	1	3	EXTERNAL GAS EXPANSION TANK		

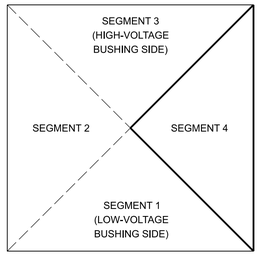

A13 FIGURE 1 - TRANSFORMER TANK SEGMENT IDENTIFICATION (TOP VIEW)

SCALE: NTS

US Army Corps of Engineers®

MARK	DESCRIPTION	DATE

ISSUE DATE: OCTOBER 2025
SOLICITATION NO.: W912EF26RA003
CONTRACT NO.:
FILE NUMBER: LGS-1-6-1E4015

DESIGNED BY: P. KLEINE, P.E.
DRAWN BY: P. KLEINE, P.E.
CHECKED BY: D. FILER
SUBMITTED BY: JORDAN S. FRINK, P.E.
SIZE: ANSI D
FILE NAME: LGS03118a_E-105.dgn

U.S. ARMY CORPS OF ENGINEERS
WALLA WALLA DISTRICT
201 N 3RD AVE
WALLA WALLA, WASHINGTON

US ARMY CORPS OF ENGINEERS
HYDROELECTRIC DESIGN CENTER
333 SW 1ST AVE
PORTLAND, OREGON

LITTLE GOOSE LOCK AND DAM
LOWER SNAKE RIVER SPARE TRANSFORMERS
T1

GENERATOR STEP-UP TRANSFORMER
LAYOUT AND LIMITING DIMENSIONS
SEGMENT 4

SHEET ID
VOLUME 1
E-105

FINAL

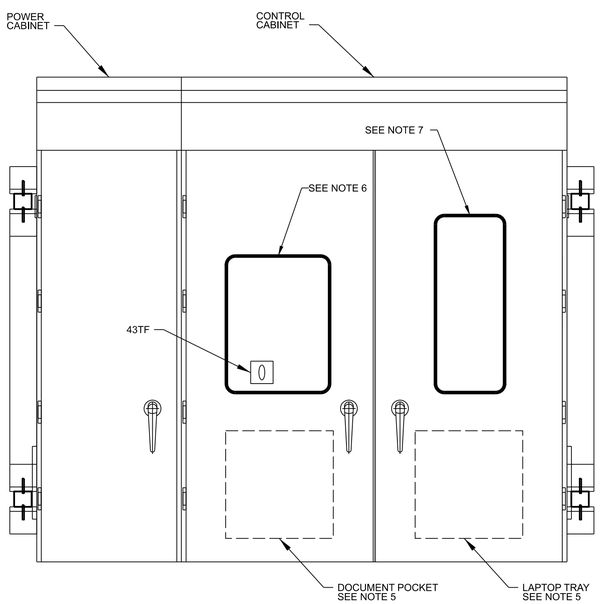

G1 ELEVATION - CONTROL AND POWER CABINETS
SCALE: 1 1/2" = 1'-0"

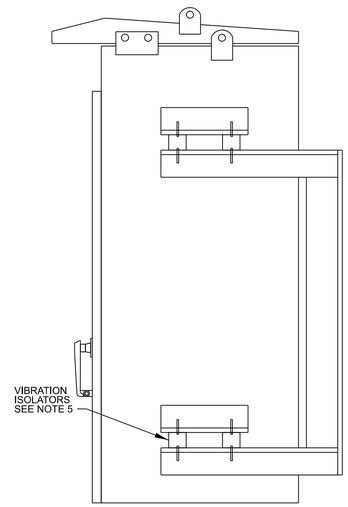

G8 SIDE VIEW - CONTROL AND POWER CABINETS
SCALE: 1 1/2" = 1'-0"

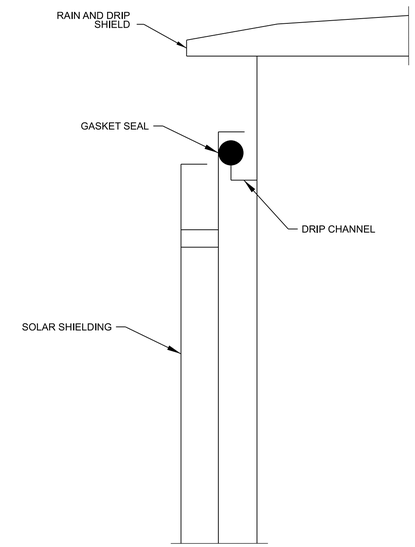

G13 TYPICAL CABINET DOOR SEAL
SCALE: NTS

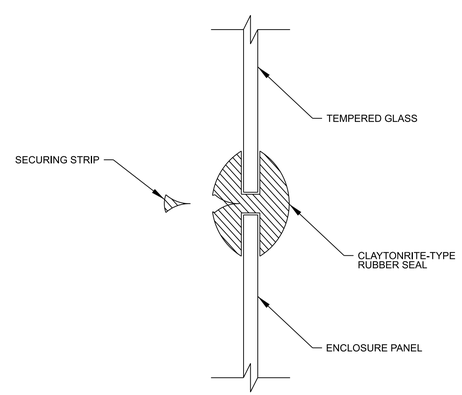

A9 TYPICAL CLAYTONRITE-TYPE WINDOW SEAL
SCALE: NTS

GENERAL NOTES

1. THE TRANSFORMER CONTROL AND POWER CABINETS ARE TO BE DESIGNED AND BUILT IN ACCORDANCE WITH UL 508A STANDARD.
2. SPACE FOR ARC FLASH LABEL (PROVIDED BY THE GOVERNMENT).
3. ALL CONDUIT ROUTING FROM THE TRANSFORMER DEVICES TO THE CONTROL AND POWER CABINETS SHALL ONLY ENTER EACH CABINET THROUGH THE BASE.
4. THE CONTROL AND POWER CABINETS ARE TO BE MOUNTED TO A FRAME STRUCTURE USING VIBRATION ISOLATORS.
5. THE RIGHT DOOR IS TO HAVE A DROP DOWN LAPTOP TRAY MOUNTED ON THE INSIDE OF THE DOOR. THE TRAY IS TO INCLUDE FOLDING HINGES WHICH SECURE THE TRAY IN A HORIZONTAL POSITION WHEN LOWERED, AND A MEANS FOR LATCHING THE TRAY WHEN STOWED. THE LEFT DOOR IS TO HAVE A METAL POCKET, SIZED TO HOLD THE O&M MANUAL DRAWINGS.
6. THE LEFT CONTROL CABINET DOOR IS TO HAVE A TEMPERED GLASS WINDOW WITH A WEATHERPROOF SEAL FOR VIEWING OF A FUTURE INSTALLED ELECTRONIC TEMPERATURE MONITOR AND COOLING CONTROL SYSTEM DISPLAY.
7. THE RIGHT CONTROL CABINET DOOR IS TO HAVE A TEMPERED GLASS WINDOW WITH A WEATHERPROOF SEAL FOR VIEWING OF A FUTURE INSTALLED ANNUNCIATOR DISPLAY.

LEGEND

43TF COOLING GROUP ON-OFF-AUTO SELECTOR SWITCH

US Army Corps of Engineers®

MARK	DESCRIPTION	DATE

DESIGNED BY: P. KLEINE, P.E.
DRAWN BY: P. KLEINE, P.E.
CHECKED BY: D. FILER
SUBMITTED BY: JORDAN S. TINKLE, P.E.
SIZE: ANSI D
FILE NAME: LG503118a_E-106.dgn
ISSUE DATE: OCTOBER 2025
SOLICITATION NO.: W912EF26RA003
CONTRACT NO.:
FILE NUMBER: LGS-1-G-1E4016

U.S. ARMY CORPS OF ENGINEERS
WALLA WALLA DISTRICT
201 N 3RD AVE
WALLA WALLA, WASHINGTON

US ARMY CORPS OF ENGINEERS
HYDROELECTRIC DESIGN CENTER
333 SW 1ST AVE
PORTLAND, OREGON

LITTLE GOOSE LOCK AND DAM
LOWER SNAKE RIVER SPARE TRANSFORMERS
T1

GENERATOR STEP-UP TRANSFORMER
POWER AND CONTROL CABINETS

SHEET ID
VOLUME 1
E-106

FINAL

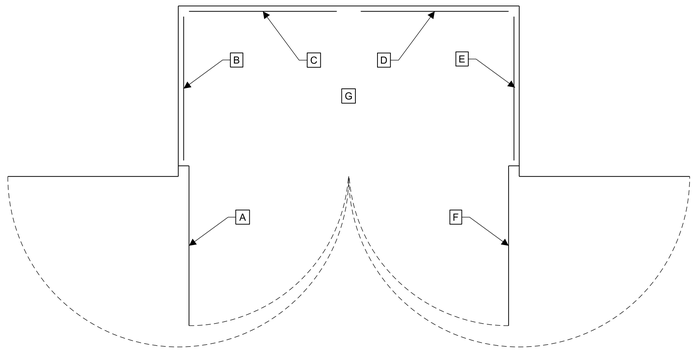

K2 CONTROL CABINET TOP VIEW

SCALE: NTS

BILL OF MATERIALS - CONTROL CABINET COMPONENTS

ITEM	QTY	DESCRIPTION	EXAMPLE	MODEL NUMBER
50	-	ELECTRONIC COOLING CONTROL (FUTURE)	QUALITROL	QTMS
51	-	LOCAL ANNUNCIATOR PANEL (FUTURE)	SEL	2533
52	AS REQ'D	MOLDED-CASE CIRCUIT BREAKERS	SCHNEIDER ELECTRIC	HJL
53	AS REQ'D	AUXILIARY RELAYS	SQUARE D	8501, TYPE X
54	AS REQ'D	TIME DELAY RELAY	AGASTAT	SERIES 7000
55	AS REQ'D	UNDERVOLTAGE RELAY	TIME MARK	C26(XX)
56	1	INTERPOSING RELAY FOR LOCKOUT RELAY	GENERAL ELECTRIC	HMA
58	1	COOLING GROUP SELECTOR SW. (DEVICE 43TF)	ELECTROSWITCH	SERIES 24
59	AS REQ'D	TERMINAL BLOCKS - CONTROL SIGNAL TYPE	STATES	TYPE NT, CLASS 250
61	AS REQ'D	TERMINAL BLOCKS - SHORT CIRCUIT	STATES	TYPE NT, CLASS 251-G
62	AS REQ'D	TERMINAL BLOCKS - POWER DISTRIBUTION TYPE	MARATHON	SERIES 142
63	AS REQ'D	FUSES	BUSSMAN	LPJ
64	AS REQ'D	FUSEHOLDERS	BUSSMAN	JTN600(XX)
65	AS REQ'D	CABINET HEATER	WAUKESHA	PTC2
66	1	HUMIDISTAT / THERMOSTAT (DEVICE 23-1)	HAMMOND MFG	SKTH012009-C
67	1	RECEPTACLE WITH GFCI	HUBBELL	GFR8300SGW
68	1	GROUND BUS BAR	-	-

GENERAL NOTES

1. THE TRANSFORMER CONTROL AND POWER CABINETS ARE TO BE DESIGNED AND BUILT IN ACCORDANCE WITH UL 508A STANDARD.
2. THE CONTROL CABINET LAYOUT AS SHOWN IS FOR ILLUSTRATIVE PURPOSES ONLY. THE ACTUAL LAYOUT MAY BE MODIFIED BY THE CONTRACTOR.
3. THE CONTROL CABINET IS TO BE DESIGNED FOR THE FUTURE INSTALLATION OF AN ELECTRONIC COOLING CONTROL SYSTEM IN A REAR MOUNT CHASSIS IN THE CONTROL CABINET. WITH AN HMI MODULE REMOTELY MOUNTED ON THE SWING PANEL SO THAT THE FRONT IS VISIBLE THROUGH A WATERPROOF VIEWING GLASS IN THE LEFT CONTROL CABINET DOOR.
4. THE CONTROL CABINET IS TO BE DESIGNED FOR THE FUTURE INSTALLATION OF ONE ANNUNCIATOR MOUNTED ON THE SWING PANEL SO THAT THE FRONT IS VISIBLE THROUGH A WATERPROOF VIEWING GLASS IN THE RIGHT CONTROL CABINET DOOR.
5. THE GFCI OUTLET IS TO BE ACCESSIBLE ONLY FROM INSIDE OF THE CONTROL CABINET.
6. THE REMOVABLE BOTTOM PLATE THICKNESS IS TO BE 10 GAUGE, MINIMUM.

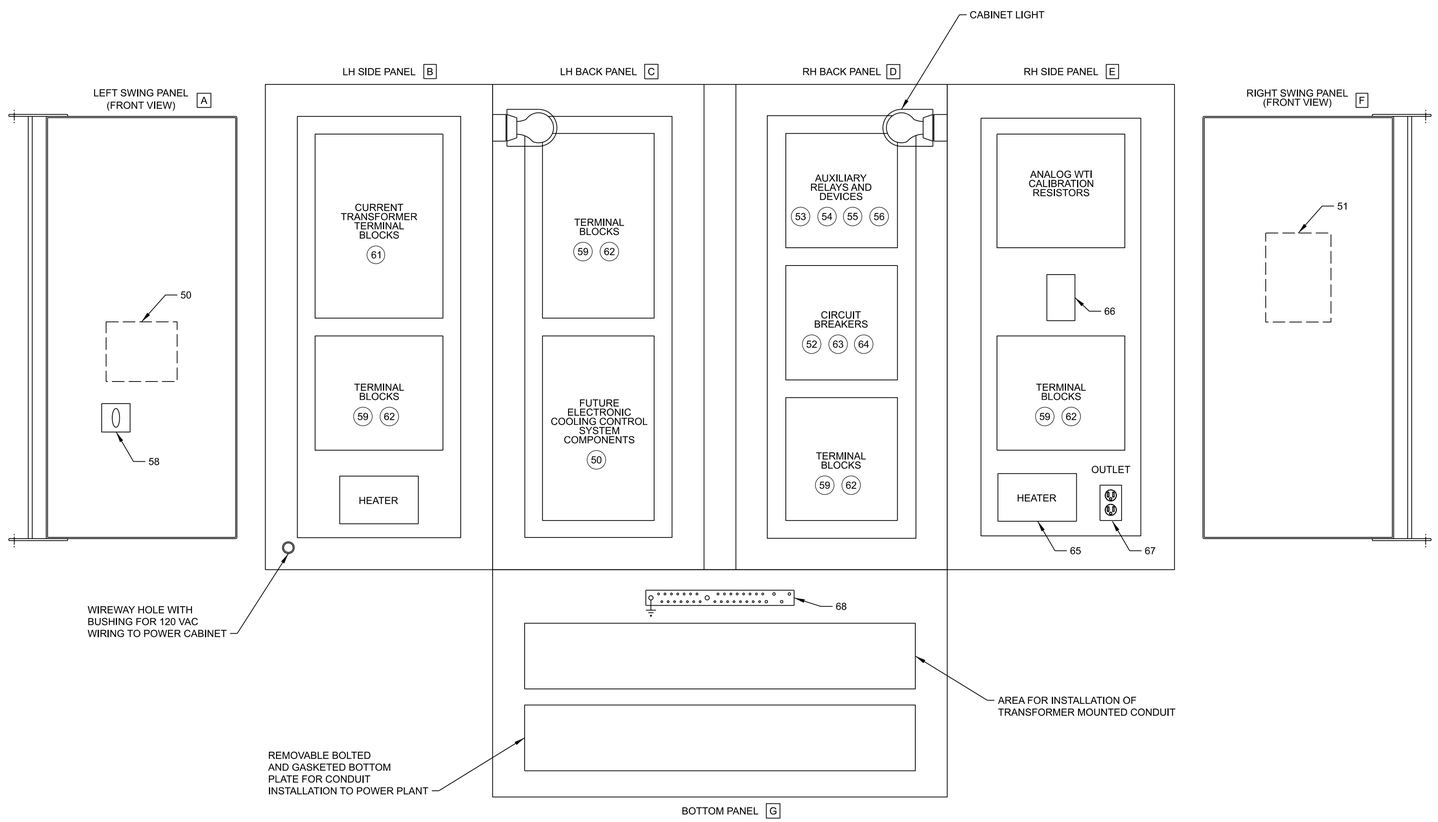

A1 CONTROL CABINET LAYOUT

SCALE: NTS

US Army Corps of Engineers®

MARK	DESCRIPTION	DATE

ISSUE DATE: OCTOBER 2025
SOLICITATION NO.: W912EF26RA003
CONTRACT NO.:
FILE NUMBER: LGS-1-6-1E4017

DESIGNED BY: P. KLEINE, P.E.
DRAWN BY: P. KLEINE, P.E.
CHECKED BY: D. FILER
SUBMITTED BY: JORDAN S. FINK, P.E.
SIZE: ANSI D
FILE NAME: LGS03118a_E-107.dgn

U.S. ARMY CORPS OF ENGINEERS
WALLA WALLA DISTRICT
201 N 3RD AVE
WALLA WALLA, WASHINGTON

US ARMY CORPS OF ENGINEERS
HYDROELECTRIC DESIGN CENTER
333 SW 1ST AVE
PORTLAND, OREGON

LITTLE GOOSE LOCK AND DAM
LOWER SNAKE RIVER SPARE TRANSFORMERS
T1

GENERATOR STEP-UP TRANSFORMER
CONTROL CABINET LAYOUT

SHEET ID
VOLUME 1
E-107

FINAL

BILL OF MATERIALS - POWER CABINET COMPONENTS

ITEM	QTY	DESCRIPTION	EXAMPLE	MODEL NUMBER
52	AS REQ'D	MOLDED-CASE CIRCUIT BREAKERS	SQUARE D	JJL
59	AS REQ'D	TERMINAL BLOCKS - CONTROL SIGNAL TYPE	STATES	TYPE NT, CLASS 250
62	AS REQ'D	TERMINAL BLOCKS - POWER DISTRIBUTION TYPE	MARATHON	SERIES 142
63	AS REQ'D	FUSES	BUSSMAN	LPJ
64	AS REQ'D	FUSEHOLDERS	BUSSMAN	JTN600(XX)
65	AS REQ'D	CABINET HEATER	WAUKESHA	PTC2
66	AS REQ'D	HUMIDISTAT / THERMOSTAT (DEVICE 23-2)	HAMMOND MFG	SKTH012009-C
68	1	GROUND BUS BAR		
71	AS REQ'D	MAGNETIC CONTACTORS	SQUARE D	8502

GENERAL NOTES

1. THE LAYOUT SHOWN IS FOR ILLUSTRATIVE PURPOSES ONLY AND MAY BE MODIFIED BY THE CONTRACTOR.
2. ALL 480 VAC PROTECTIVE AND CONTROL EQUIPMENT FOR THE COOLING FANS, INCLUDING THE MOLDED-CASE CIRCUIT BREAKERS, CONTACTORS AND POWER TERMINAL BLOCKS SHALL BE MOUNTED IN THE 480 VAC POWER CABINET.
3. THE REMOVABLE BOTTOM PLATE THICKNESS SHALL BE 10 GAUGE, MINIMUM.

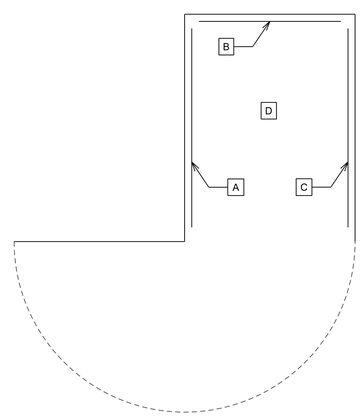

A8 POWER CABINET - TOP VIEW
SCALE: NTS

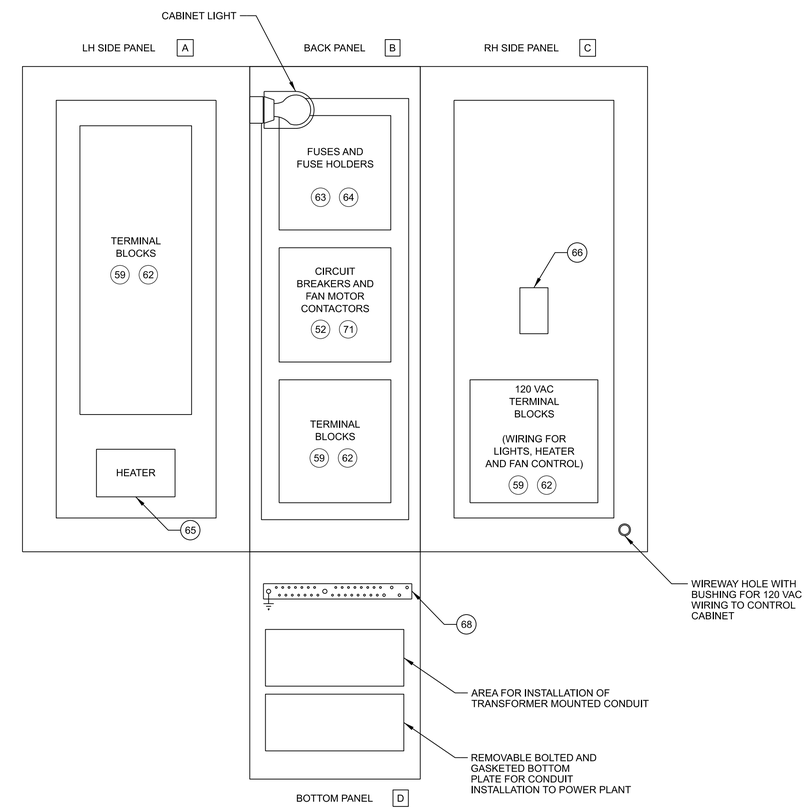

A13 POWER CABINET LAYOUT
SCALE: NTS

US Army Corps of Engineers®

MARK	DESCRIPTION	DATE

DESIGNED BY: P. KLEINE, P.E.	ISSUE DATE: OCTOBER 2025
DRAWN BY: P. KLEINE, P.E.	SOLICITATION NO.: W912EF26RA003
CHECKED BY: D. FILER	CONTRACT NO.:
SUBMITTED BY: JORDAN S. FINK, P.E.	FILE NUMBER: LGS-1-6-1E4008
SIZE: ANSI D	FILENAME: LGS0318a_E-108.dgn

U.S. ARMY CORPS OF ENGINEERS
WALLA WALLA DISTRICT
201 N 3RD AVE
WALLA WALLA, WASHINGTON

US ARMY CORPS OF ENGINEERS
HYDROELECTRIC DESIGN CENTER
333 SW 1ST AVE
PORTLAND, OREGON

LITTLE GOOSE LOCK AND DAM
LOWER SNAKE RIVER SPARE TRANSFORMERS
T1

GENERATOR STEP-UP TRANSFORMER
POWER CABINET LAYOUT

SHEET ID
VOLUME 1
E-108

FINAL

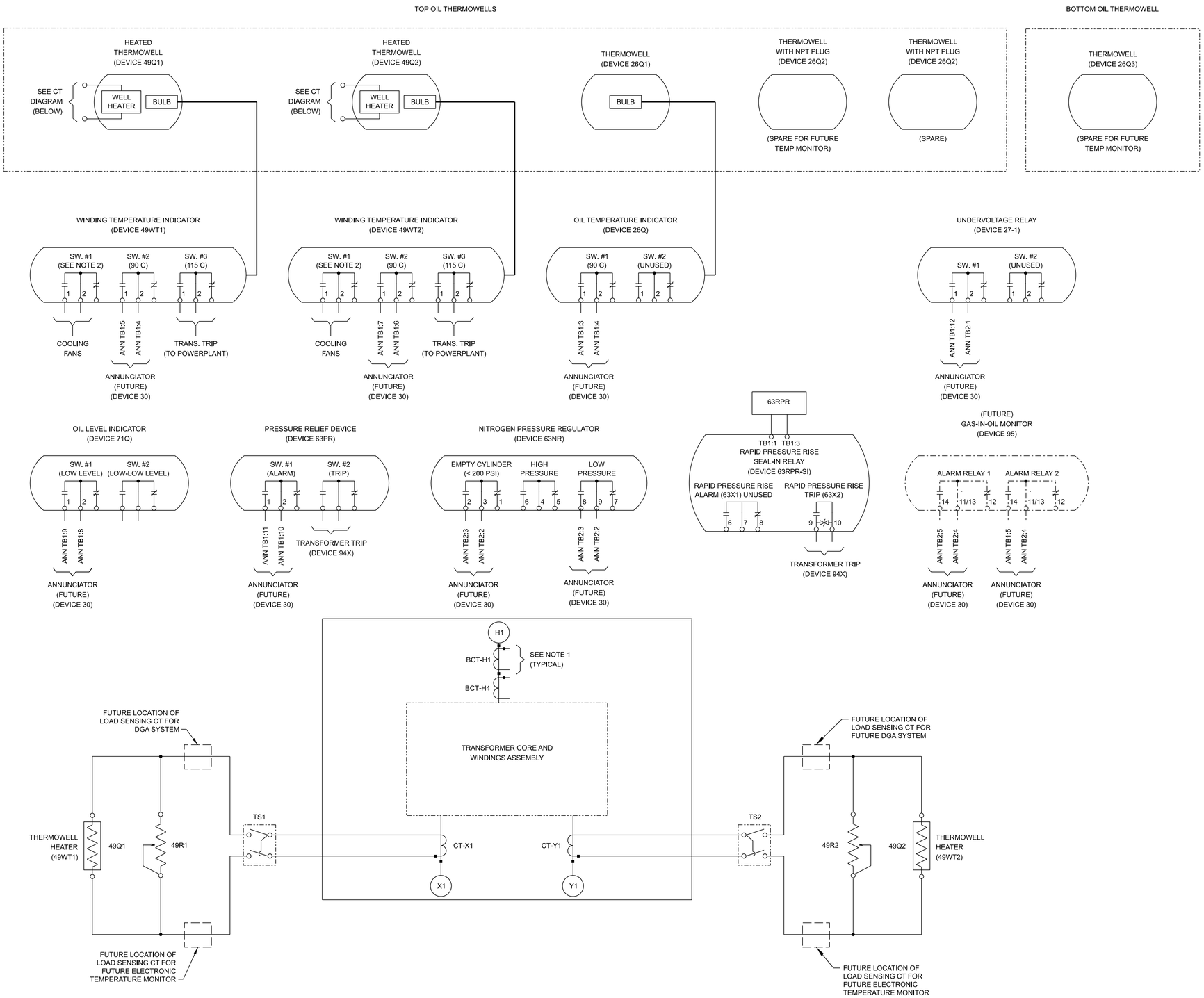

A1 CURRENT TRANSFORMERS AND HEAT THERMOWELLS

SCALE: NTS

GENERAL NOTES

1. ALL BUSHING CURRENT TRANSFORMERS AND CURRENT TRANSFORMER SECONDARY WIRING IS TO BE ROUTED TO THE CONTROL CABINET AND TERMINATED ON SHORTING TERMINAL BLOCKS.
2. THE WINDING TEMPERATURE SETTING FOR ENERGIZING THE COOLING FANS IS TO BE BASED UPON THE RESULTS OF THE FACTORY TEMPERATURE RISE TESTS AT THE ONAN RATING.

LEGEND

26Q	ANALOG OIL TEMPERATURE INDICATOR
26Q1,2,3	THERMOWELLS
27	UNDERVOLTAGE RELAY
30	ANNUNCIATOR
49Q1,2	HEATED THERMOWELLS
49R1,2	CALIBRATION DEVICES
49WT1,2	ANALOG WINDING TEMPERATURE INDICATORS
63NR	NITROGEN PRESSURE REGULATOR
63PR	PRESSURE RELIEF DEVICE
63RPR	RAPID PRESSURE RISE RELAY
63RPR-SI	RAPID PRESSURE RISE RELAY SEAL-IN RELAY
63X1	RAPID PRESSURE RISE RELAY ALARM
63X2	RAPID PRESSURE RISE RELAY TRIP
71Q	OIL LEVEL INDICATOR
94X	TRIP AUXILIARY RELAY
95	GAS-IN-OIL MONITOR
DGA	DISSOLVED GAS ANALYZER
BCT_	MULTI-RATIO BUSHING CURRENT TRANSFORMERS
CT_	CURRENT TRANSFORMERS
H0	HIGH-VOLTAGE NEUTRAL BUSHING
H1	HIGH-VOLTAGE BUSHING
RTD	RESISTANCE TEMPERATURE DETECTOR
SW	SWITCH
TB_	TERMINAL BLOCKS
TS_	TEST SWITCHS
X1	LOW-VOLTAGE BUSHING
Y1	LOW-VOLTAGE BUSHING
- - -	DEVICES AND WIRING TO BE INSTALLED IN THE FUTURE BY THE GOVERNMENT.

US Army Corps of Engineers®

MARK	DESCRIPTION	DATE

DESIGNED BY: P. KLEINE, P.E.
DRAWN BY: P. KLEINE, P.E.
CHECKED BY: D. FILER
SUBMITTED BY: JORDAN S. FINNILA, P.E.
SIZE: ANSI D
ISSUE DATE: OCTOBER 2025
SOLICITATION NO.: W912EF26RA003
CONTRACT NO.:
FILE NUMBER: LGS-1-6-1E40/9
FILE NAME: LGS03118a_E-109.dgn

U.S. ARMY CORPS OF ENGINEERS
WALLA WALLA DISTRICT
201 N 3RD AVE
WALLA WALLA, WASHINGTON

US ARMY CORPS OF ENGINEERS
HYDROELECTRIC DESIGN CENTER
333 SW 1ST AVE
PORTLAND, OREGON

LITTLE GOOSE LOCK AND DAM
LOWER SNAKE RIVER SPARE TRANSFORMERS
T1

GENERATOR STEP-UP TRANSFORMER
TRANSFORMER MOUNTED DEVICES
LAYOUT AND DETAILS

SHEET ID
VOLUME 1
E-109

FINAL

LEGEND CONT

86TX	LOCKOUT RELAY (LOCATED IN THE POWERHOUSE)
88	FAN MOTOR
94X	TRIP AUXILIARY RELAY
DGA	DISSOLVED GAS ANALYZER (FUTURE)
DS	CABINET DOOR SWITCH
ETM	ELECTRONIC TRANSFORMER MONITORING SYSTEM (FUTURE)
FCT	FAN CURRENT TRANSFORMER
GFCI	GROUND FAULT CIRCUIT INTERRUPTER
HTR	CABINET HEATER
LT	CABINET LIGHT
PDB_	POWER DISTRIBUTION BLOCKS

LEGEND

23	INDUSTRIAL GRADE HUMIDISTAT / THERMOSTAT
27	UNDERVOLTAGE RELAY
30	ANNUNCIATOR
42	COOLING GROUP MOTOR CONTACTOR
49WT1,2	ANALOG WINDING TEMPERATURE INDICATORS
52-_	AC MOLDED-CASE CIRCUIT BREAKERS
63RPR	RAPID PRESSURE RISE RELAY
63RPR-SI	RAPID PRESSURE RISE RELAY SEAL-IN RELAY
72-_	DC MOLDED-CASE CIRCUIT BREAKERS
━ · ·	FUTURE EQUIPMENT OR WIRING TO BE INSTALLED BY THE GOVERNMENT
━ ·	EQUIPMENT LOCATED IN OTHER LOCATIONS AS NOTED

GENERAL NOTES

1. THE PURPOSE OF THE 94X AUXILIARY RELAY IS TO ALLOW FOR TRIPPING OF THE 86T LOCKOUT WITHOUT OVERLOADING THE ELECTRONIC TEMPERATURE MONITOR (ETM) OUTPUT RELAY CONTACTS THAT WILL BE INSTALLED IN THE FUTURE. THE BURDEN OF THE LOCKOUT RELAY SOLENOID EXCEEDS THE RATING OF THE ETM. THE ETM OUTPUTS WILL BE WIRED IN PARALLEL WITH THE 49WT CONTACTS IN THE FUTURE.
2. DETAILED WIRING DESIGN SHALL BE PERFORMED BY CONTRACTOR.
3. KVA VALUES SHOWN ARE FOR ILLUSTRATION PURPOSES ONLY. THE CONTRACTOR DESIGN MAY DIFFER FROM VALUES SHOWN.
4. THE 86TX TRANSFORMER LOCKOUT AND ASSOCIATED CONTACTS ARE LOCATED IN IN THE POWERHOUSE. SEE SHEET E-603 FOR TERMINAL DETAILS.

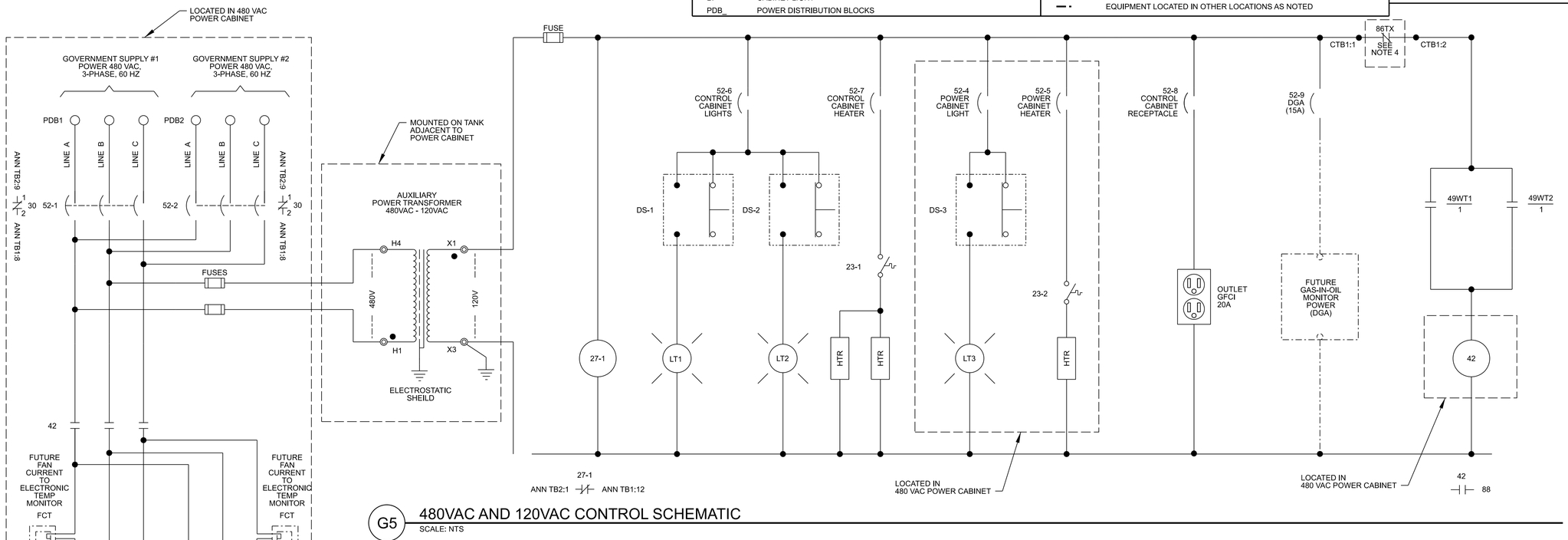

G5 480VAC AND 120VAC CONTROL SCHEMATIC
SCALE: NTS

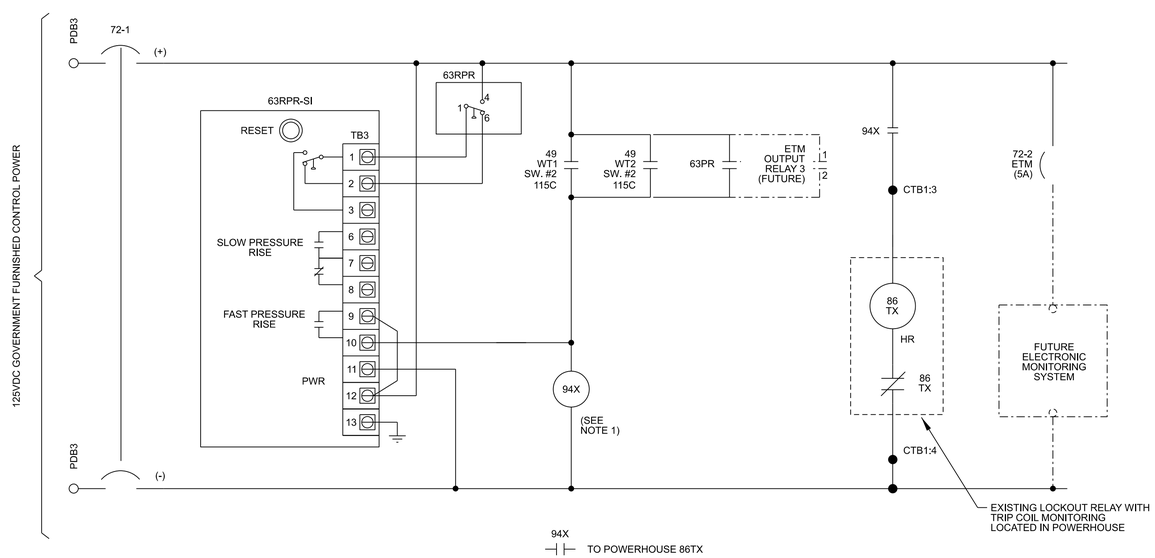

A5 125 VDC CONTROL SCHEMATIC
SCALE: NTS

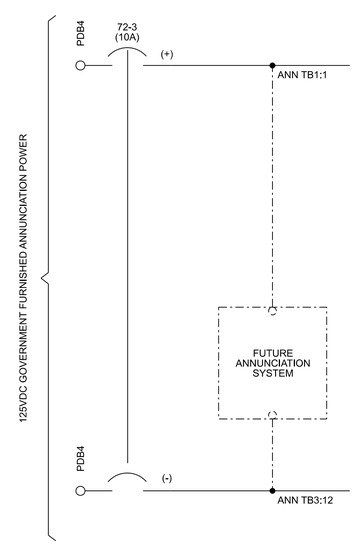

A15 125 VDC ANNUNCIATION SCHEMATIC
SCALE: NTS

US Army Corps of Engineers®

MARK	DESCRIPTION	DATE

DESIGNED BY: P. KLEINE, P.E.	ISSUE DATE: OCTOBER 2025
DRAWN BY: P. KLEINE, P.E.	SOLICITATION NO.: W912EF26RA003
CHECKED BY: D. FILER	CONTRACT NO.:
SUBMITTED BY: JORDAN S. TINKLE, P.E.	FILE NUMBER: LGA-1-G-1E2411
SIZE: ANSI D	FILENAME: LG503116a_E-601.dgn

U.S. ARMY CORPS OF ENGINEERS
WALLA WALLA DISTRICT
201 N 3RD AVE
WALLA WALLA, WASHINGTON

US ARMY CORPS OF ENGINEERS
HYDROELECTRIC DESIGN CENTER
333 SW 1ST AVE
PORTLAND, OREGON

LITTLE GOOSE LOCK AND DAM
LOWER SNAKE RIVER SPARE TRANSFORMERS
T1

GENERATOR STEP-UP TRANSFORMER CONTROL SCHEMATICS

SHEET ID
VOLUME 1
E-601

FINAL

GENERAL NOTES

1. DRAWING SHOWS FUTURE ANNUNCIATION CONNECTIONS TO POWERHOUSE ANNUNCIATION SYSTEM THAT WILL BE WIRED IN THE FUTURE. CONTRACTOR MUST WIRE ANNUNCIATION POINTS TO TERMINAL BLOCKS IN CONTROL CABINET AS INDICATED BY SOLID LINES. DASHED LINES INDICATES WIRES THAT WILL BE INSTALLED BY THE GOVERNMENT IN THE FUTURE.
2. PROVIDE 12AWG JUMPERS AS INDICATED FOR ANN TB1 AND ANN TB2 TO ALLOW FOR DAISY CHAINING THE POSITIVE GOVERNMENT FURNISHED 125VDC ANNUNCIATION POWER TO DEVICE CONTACTS.
3. SEE SHEET E-109 FOR ALARM CONTACT DETAILS.
4. THE ANNUNCIATION CIRCUIT DESIGN IS BASED ON THE SEL-2533 ANNUNCIATOR AND A INERT-GAS OIL PRESERVATION SYSTEM.

LEGEND

26Q	ANALOG OIL TEMPERATURE INDICATOR
27	UNDERVOLTAGE RELAY
49WT1,2	ANALOG WINDING TEMPERATURE INDICATORS
63NR	NITROGEN PRESSURE REGULATOR
63PR	PRESSURE RELIEF DEVICE
71Q	OIL LEVEL INDICATOR
86TX	LOCKOUT RELAY
NO	NORMALLY OPEN CONTACT
NC	NORMALLY CLOSED CONTACT
PH	POWER HOUSE ANNUNCIATION
— · —	INDICATES FUTURE WIRING OR DEVICES TO BE INSTALLED BY THE GOVERNMENT
——	INDICATES WIRING TO BE INSTALLED BY THE CONTRACTOR

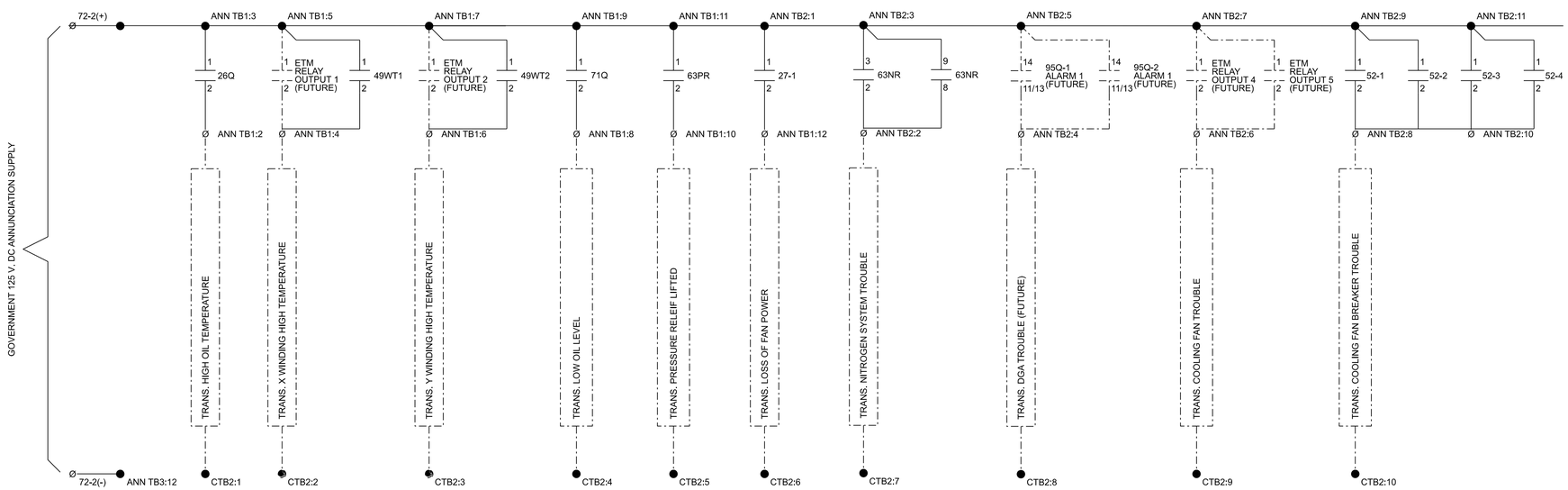

F1 TRANSFORMER ANNUNCIATION
SCALE: NTS

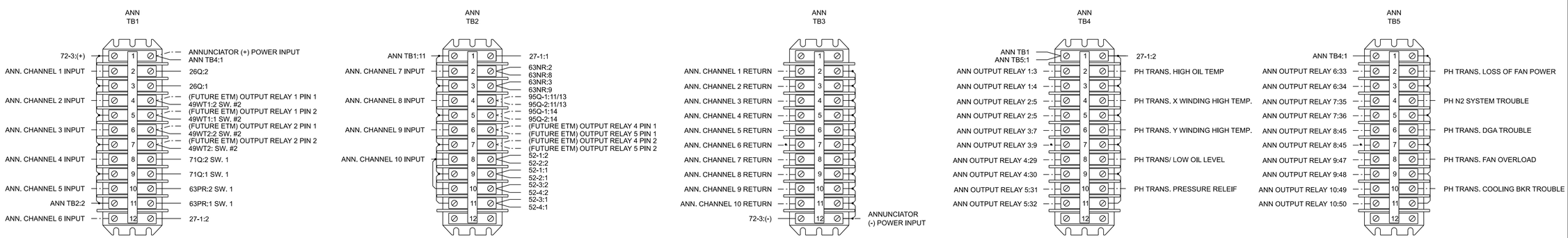

B1 TERMINAL BLOCKS FOR FUTURE ANNUNCIATION
SCALE: NTS

US Army Corps of Engineers®

MARK	DESCRIPTION	DATE

DESIGNED BY: P. KLEINE, P.E.
DRAWN BY: P. KLEINE, P.E.
CHECKED BY: D. FILER
SUBMITTED BY: JORDAN S. TINKLE, P.E.
SIZE: E2 FILENAME: LGS03118a_E-602.dgn
ISSUE DATE: OCTOBER 2025
SOLICITATION NO.: W912EF26RA003
CONTRACT NO.:
FILE NUMBER: LGA-1-G-1E24/2

U.S. ARMY CORPS OF ENGINEERS
WALLA WALLA DISTRICT
201 N 3RD AVE
WALLA WALLA, WASHINGTON

US ARMY CORPS OF ENGINEERS
HYDROELECTRIC DESIGN CENTER
333 SW 1ST AVE
PORTLAND, OREGON

LITTLE GOOSE LOCK AND DAM
LOWER SNAKE RIVER SPARE TRANSFORMERS
T1

GENERATOR STEP-UP TRANSFORMER
ANNUNCIATOR SCHEMATICS

SHEET ID
VOLUME 1
E-602

FINAL

GENERAL NOTES

1. THE LAYOUT SHOWN IS FOR ILLUSTRATIVE PURPOSES ONLY, AND MAY BE MODIFIED BY THE CONTRACTOR.
2. THE LEFT SIDE OF THE TERMINAL BLOCKS ARE RESERVED FOR FUTURE WIRING CONNECTIONS TO THE POWERHOUSE. MAKE ALL TRANSFORMER CONNECTIONS TO THE RIGHT SIDE OF THE TERMINAL BLOCKS.
3. TERMINAL BLOCK CTB1 IS FOR CONNECTIONS TO THE 86TX LOCKOUT CIRCUIT IN THE POWERHOUSE. WIRE THE RIGHT SIDE OF THE TERMINAL AS INDICATED.
4. PROVIDE TWO TERMINAL BLOCKS, DESIGNATED CTB3, AND CTB4 IN THE CONTROL CABINET FOR FUTURE GOVERNMENT WIRING.
5. THE WIRING TO CTB2 IS WIRING FROM THE FUTURE ANNUNCIATION SYSTEM TO BE INSTALLED BY THE GOVERNMENT.

LEGEND

BCT_	BUSHING CURRENT TRANSFORMERS
CTB_	CONTROL TERMINAL BLOCKS
PDB_	POWER DISTRIBUTION BLOCKS
STB_	SHORTING TERMINAL BLOCKS (CT WIRING)
—·—	INDICATES WIRING OR DEVICES TO BE INSTALLED BY THE GOVERNMENT
——	INDICATES WITING TO BE INSTALLED BY THE CONTRACTOR

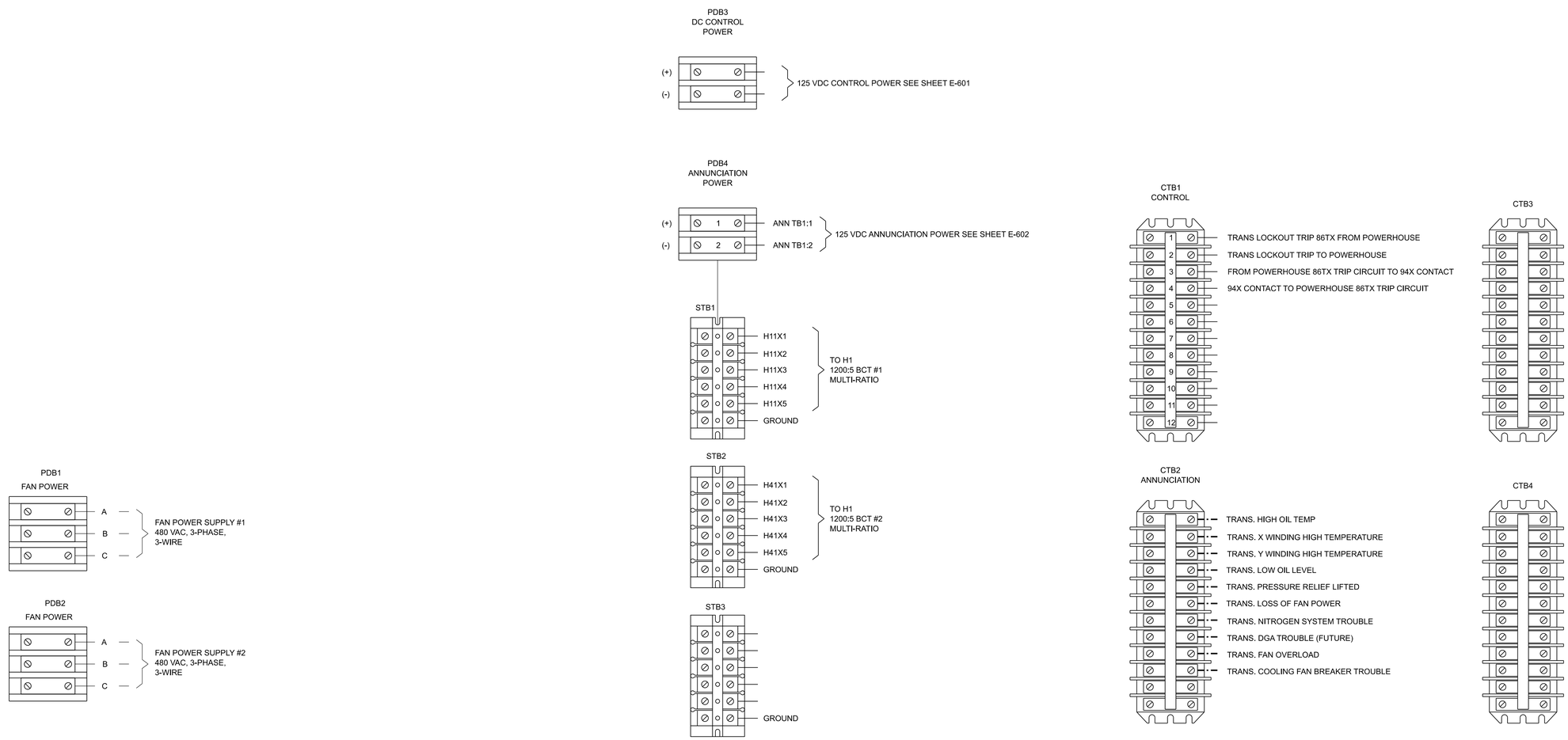

A1 POWER CABINET TERMINAL BLOCKS FOR EXTERNAL CONNECTIONS
SCALE: NTS

A8 CONTROL CABINET TERMINAL BLOCKS FOR EXTERNAL CONNECTIONS
SCALE: NTS

US Army Corps of Engineers®

MARK	DESCRIPTION	DATE

ISSUE DATE: OCTOBER 2025
SOLICITATION NO.: W912EF26RA003
CONTRACT NO.:
FILE NUMBER: LGA-1-G-1E2413
LGS03118a_E-603.dgn

DESIGNED BY: P. KLEINE, P.E.
DRAWN BY: P. KLEINE, P.E.
CHECKED BY: D. FILER
SUBMITTED BY: JORDAN S. TINKER, P.E.
SIZE: ANSI D

U.S. ARMY CORPS OF ENGINEERS
WALLA WALLA DISTRICT
201 N 3RD AVE
WALLA WALLA, WASHINGTON

US ARMY CORPS OF ENGINEERS
HYDROELECTRIC DESIGN CENTER
333 SW 1ST AVE
PORTLAND, OREGON

LITTLE GOOSE LOCK AND DAM
LOWER SNAKE RIVER SPARE TRANSFORMERS
T1

GENERATOR STEP-UP TRANSFORMER
CONTROL CABINET EXTERNAL CONNECTIONS

SHEET ID
VOLUME 1
E-603

FINAL