SUPPLEMENTAL DRAWINGS

DRAWING NUMBER	TITLE
0596E0174	GE ISOPHASE DRAWING BAY 1 & 2
0596E0175	GE ISOPHASE DRAWING BAY 2 & 3
0108B4951	GE ISOPHASE DRAWING TOP TRANSFORMER CONNECTION
1M1408-01	WESTINGHOUSE TRANSFORMER, CLASS OA/FA SHELL FORM OUTDOOR SINGLE PHASE SHEET 1
1M1408-02	WESTINGHOUSE TRANSFORMER, CLASS OA/FA SHELL FORM OUTDOOR SINGLE PHASE SHEET 2
1M1408-03	WESTINGHOUSE TRANSFORMER, CLASS OA/FA SHELL FORM OUTDOOR SINGLE PHASE SHEET 3
1M1408-04	WESTINGHOUSE TRANSFORMER CONTROL SCHEMATIC AND WIRING DIAGRAM SHEET 1
1M1408-05	WESTINGHOUSE TRANSFORMER CONTROL SCHEMATIC AND WIRING DIAGRAM SHEET 2
DEB60109221	HICO TANK BASE
DEB6010999R2	HICO POWER TRANSFORMER FOUNDATION
LGB-1-13-1/1	TRANSFORMER PAD PLAN VIEW
LGB-1-13-1/2	TRANSFORMER PAD FLEXURAL STEEL REINFORCEMENT
LGP-1.1-6-1A5/6	POWERHOUSE HIGH VOLTAGE EQUIPMENT PLAN
LGP-1.1-6-1A5/7	POWERHOUSE HIGH VOLTAGE EQUIPMENT SECTIONS
LGP-1.1-6-1A6/1	POWERHOUSE 15 KV EQUIPMENT SHEET 1
LGP-1.1-6-1A6/2	POWERHOUSE 15 KV EQUIPMENT SHEET 2
LGP-1.1-6-1A6/3	POWERHOUSE 15 KV EQUIPMENT SHEET 3
LGP-1-4-2/40	POWERHOUSE GENERATOR BAYS-CONCRETE OUTLINE INTAKE DECK-EL. 651 SH2
LGP-1-5-0/21	POWERHOUSE MISCELLANEOUS METAL MISCELLANEOUS DETAILS SH2
T025B1000DS	HITACHI TYPE RJ BUSHING FOR LV WINDINGS
T025W0412AT	HITACHI TYPE O+ C BUSHING FOR HV NEUTRAL BUSHING
T550W2000VV	HITACHI TYPE O+ C BUSHING FOR HV BUSHING

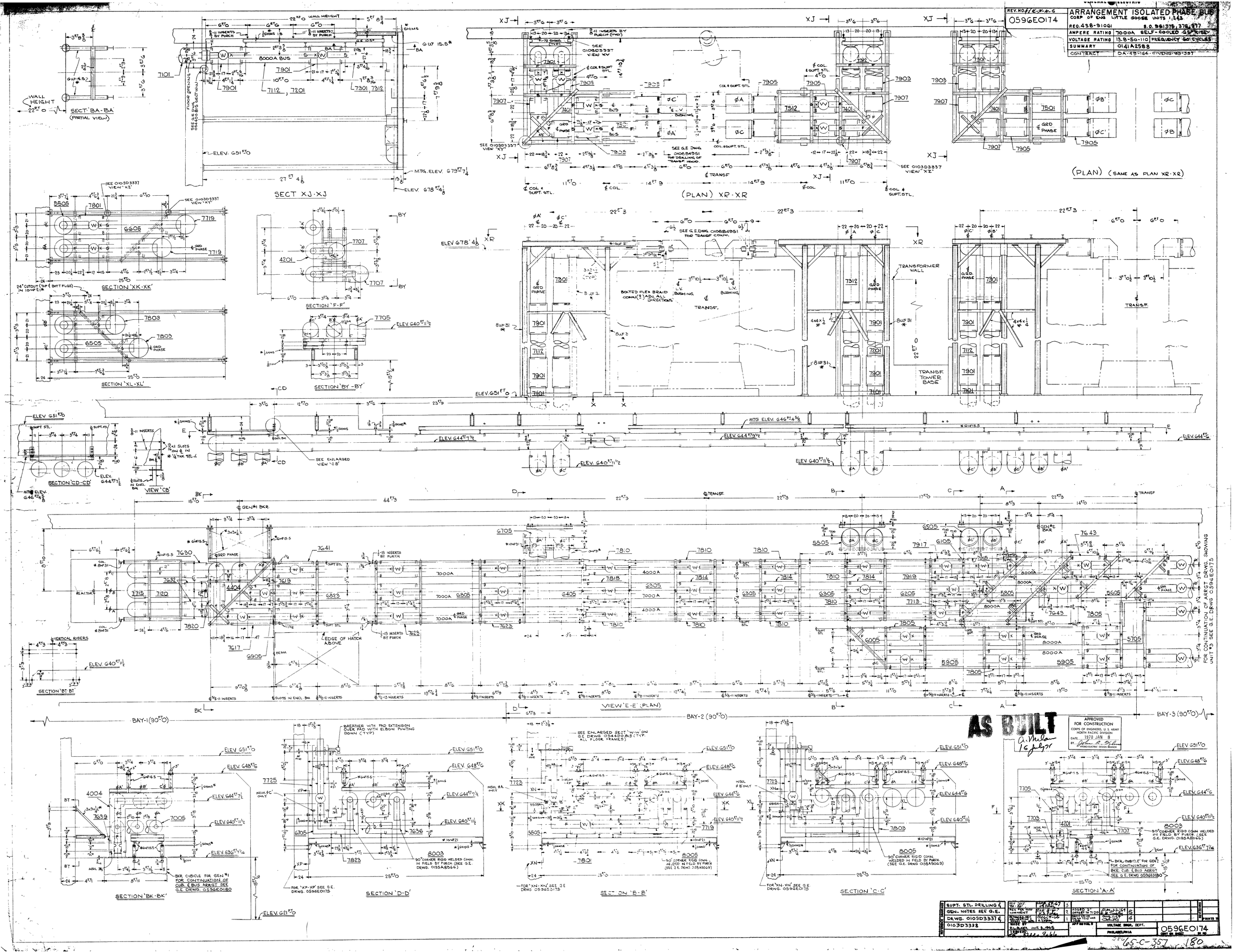

ARRANGEMENT ISOLATED PHASE BUS
CORP OF ENG LITTLE GOOSE UNITS 1,2&3
REQ. 438-91061
S.O. 961375, 376, 377
AMPERE RATING 7000A SELF-COOLED 65° RISE
VOLTAGE RATING 13.8-50-110 FREQUENCY 60 CYCLES
SUMMARY 0141A2588
CONTRACT DA-45-164-CIVENG-65-357
REV. NO. 0596E0174
SECT XJ-XJ
(PLAN) XR-XR
(PLAN) (SAME AS PLAN XR-XR)
SECTION 'XK-XK'
SECTION 'XL-XL'
SECTION 'F-F'
SECTION 'BY-BY'
SECTION 'CD-CD'
VIEW 'CB'
SECTION 'BT-BT'
VIEW 'E-E' (PLAN)
BAY-1 (90FT 0)
BAY-2 (90FT 0)
BAY-3 (90FT 0)
SECTION 'BK-BK'
SECTION 'D-D'
SECTION 'B-B'
SECTION 'C-C'
SECTION 'A-A'
AS BUILT
APPROVED FOR CONSTRUCTION
CORPS OF ENGINEERS, U.S. ARMY NORTH PACIFIC DIVISION
DATE 1970 JAN 8
HYDRO-ELECTRIC DESIGN BRANCH
SUPT. STL. DRILLING & GEN. NOTES SEE G.E. DRWG. 0103D3337 & 0103D3338
VOLTAGE SECR. DEPT.
PHILADELPHIA
0596E0174
65-C-357
180

REV. NO./DATE	ARRANGEMENT ISOLATED PHASE BUS CORP OF ENG. LITTLE GOOSE UNITS 1,2 & 3	
0596E0175	REQ. 438-31061	S.O. 961375, 376, 377
	AMPERE RATING	7000 A. SELF-COOLED 65° RISE
	VOLTAGE RATING	13.8-50-110 / FREQUENCY 60 CYCLES
	SUMMARY	01414258
	CONTRACT	DA-45-164-CIVENG-65-357

VERT. BUS RISERS

VIEW XN-XN A-OMIT; B-3ft 5"; C-20½

VIEW XM-XM A-6ft 6"; B-3ft 5"; C-20½

VIEW XP-XP A-OMIT; B-12ft 10½"; C-18¾

SECTION 'XH-XH'

SECTION 'XF-XF'

SECTION 'XG-XG'

24" CUTOUT (TOP & BOTT FLGS) IN 10WF21*

SECTION 'BW-BW'

(SEE G.E. DRWG 0596E0174) XJ

PLAN (SAME AS PLAN 'XR-XR' ON G.E. DRWG 0596E0174)

ELEVATION VIEW

TRANSMISSION TOWER BASE

TEMPORARY WALL

FOR CONTINUATION OF ARRGT. DRWG SHOWING UNITS 1 & 2 SEE G.E. DRWG. 0596E0174

2-500 MCM GND CABLE BY PURCH.

8005 (GND) SEE G.E. DRWG. 0195A8133

8008 (GND) SEE G.E. DRWG. 0195A8133

(17) 2½ DIA. x ⅛ 150L. PHASE TERMINATION POINT FOR FUTURE 7000A (10½"x ¾") GND. BUS RUN (NOTE 10½" COND. TO BE WELDED IN FIELD TO FUTURE 7000A BUS)

TWO PHASE, 27½ DIA. x ⅛ 150L. PHASE WITH 10½" DIA. GND. TERMINATION POINT FOR FUTURE 7000A BUS. (NOTE 10½" COND. TO BE WELDED IN FIELD TO FUTURE 7000A BUS)

VIEW 'E-E' (PLAN)

BAY-2 (90ft 0")

BAY-3 (90ft 0")

SECTION 'XA-XA'

SECTION 'XC-XC'

SECTION 'XD-XD'

SECTION 'XE-XE'

SECTION 'XB-XB'

BREATHER WITH PIPE EXTENSION OVER PAD ELBOW POINTING DOWN. (TYP.)

SEE ENLARGED SEC 'W-W' ON G.E. DRWG. 0544D0818 (TYP. ALL FLOOR FRAMES)

FOR INFORMATION ONLY LOCATION OF TRAY AND PROPOSED LOCATION OF 2-5"x1½" CONDUIT INTO BREAKER

BKR CUBICLE (FOR CONTINUATION OF BKR. CUBICLE & BUS ARRGT. SEE G.E. DRWG 0596E0181

AS BUILT

APPROVED FOR CONSTRUCTION CORPS OF ENGINEERS, U.S. ARMY NORTH PACIFIC DIVISION 1989 MAY 20

A. Milan 16 July 71

SUPT. STL. DRAWING & GEN. NOTES SEE G.E. DRWG. 0103D3337	ADDED GND. CONN. & REVISED GEN. NOTES PER CHANGE NOTE	3		
	REVISED PER CHANGE NOTE	2		
	REVISED PER CHANGE NOTE	1		
	MADE BY R.L. ALVES JUNE 10, 1965	APPROVALS	VOLTAGE BRGR. DEPT. PHILADELPHIA	0596E0175
	ISSUED TO			CONT ON SHEET

SCANNED

HSP-986 65-C-357 7-81

GENERAL ELECTRIC
REV NO. ØX-R3
0108B4951
CONT ON SHEET SH NO.
TITLE
TRANSF. CONN. U.S. ARMY ENGR'S
FIRST MADE FOR REQ. S.O.
CONTRACT DA-45-164-CIVENG-65-357 JOHN DAY LOCK & DAM
CONTRACT DA-45-164-CIVENG-65-356 LOWER MONUMENTAL LOCK & DAM
CONTRACT DA-45-164-CIVENG-65-357 LITTLE GOOSE LOCK & DAM
6'-0"
ISO. PHASE BUS DUCT
HOOD BY TRANSF. MANUF.
35"
40"
27 1/4 DIA.
31" SQ.
ISO. PHASE BUS DUCT
TRANSF. BUSHINGS ON 35" PHASE ℄'S WITH OFFSET TERMINALS TO 40" BY TRANSF. MANUF.
℄ TRANSF. OR TANK
PLAN VIEW
(TRANSFORMER END OF BUS RUN)
1/2-13 BOLT
3/16 THK ℞ (MANG. STL.)
BRAID
BELVILLE WASHER
BRAID
1/2-13 NUT
(MANG. STL.) 3/16 THK ℞
TYPICAL VIEW ON TRANSF. TERM'L END ONLY
(NOTE: BOLTS MAY BE ASM. INSIDE WITH BELVILLE WASH ON OUTSIDE IF PREFERRED.)
9 1/4
1 3/4
3/8 THK. TRANSF. MANUF. BARS OR TERM'L TANG.
(24) BRAIDS PER PHASE
VIEW D-D
(BRAID CONN.)
(TRANSF. MANUF. TO FURNISH TERMINALS ACCORDINGLY)
10"
FLEX. BRAIDS & HDW'E. BY G.E. CO
END ENCL. BY GE. CO.
SEE ENL. VIEW 'B'
A-A
3/8-16 CAPTURED NUTS ON TRANSF. HOOD BY TRANSF. HOOD MANUF.
3/8-16 SCR. & WASHER BY G.E. CO.
END ENCL. BY G.E. CO.
GASKET BY GE. CO.
TRANSF. HOOD BY TRANSF. MANUF.
ENL. VIEW 'B'
REQUIRED LOCATIONS OF (16) 3/8-16 CAPTURED NUTS ON TRANSF. HOOD
31"
1 1/2 7 7 7 7 1 1/2
2 1/4
26 1/2
3/4 ALL AROUND
OPENING REQ'D IN TRANSF. HOOD
VIEW 'C-C'
APPROVED FOR CONSTRUCTION
CORPS OF ENGINEERS, U.S. ARMY NORTH PACIFIC DIVISION
DATE 1969 MAY 20
HYDRO-ELECTRIC DESIGN BRANCH
MAY 16 1966 REM. DET. 1/2-13 NUT VIEW D-D ADDED TYP. VIEW TRANS TERM D-D 3
APR 15 1966 REVISED PER MARK DWG BY PURCH. 2
FEB 16 1966 REVISED & RETRACED 1
REVISIONS
MADE BY R.L. ALKER JULY 2 '65
REISSUED FEB 16 1966
APPROVALS
SWITCHGEAR DIV.
PHILA WORKS
0108B4951
CONT ON SHEET SH NO.
PRINTS TO
HSR-286
65C357-146
FF-606W1-P (7-52)
PRINTED IN U.S.A.

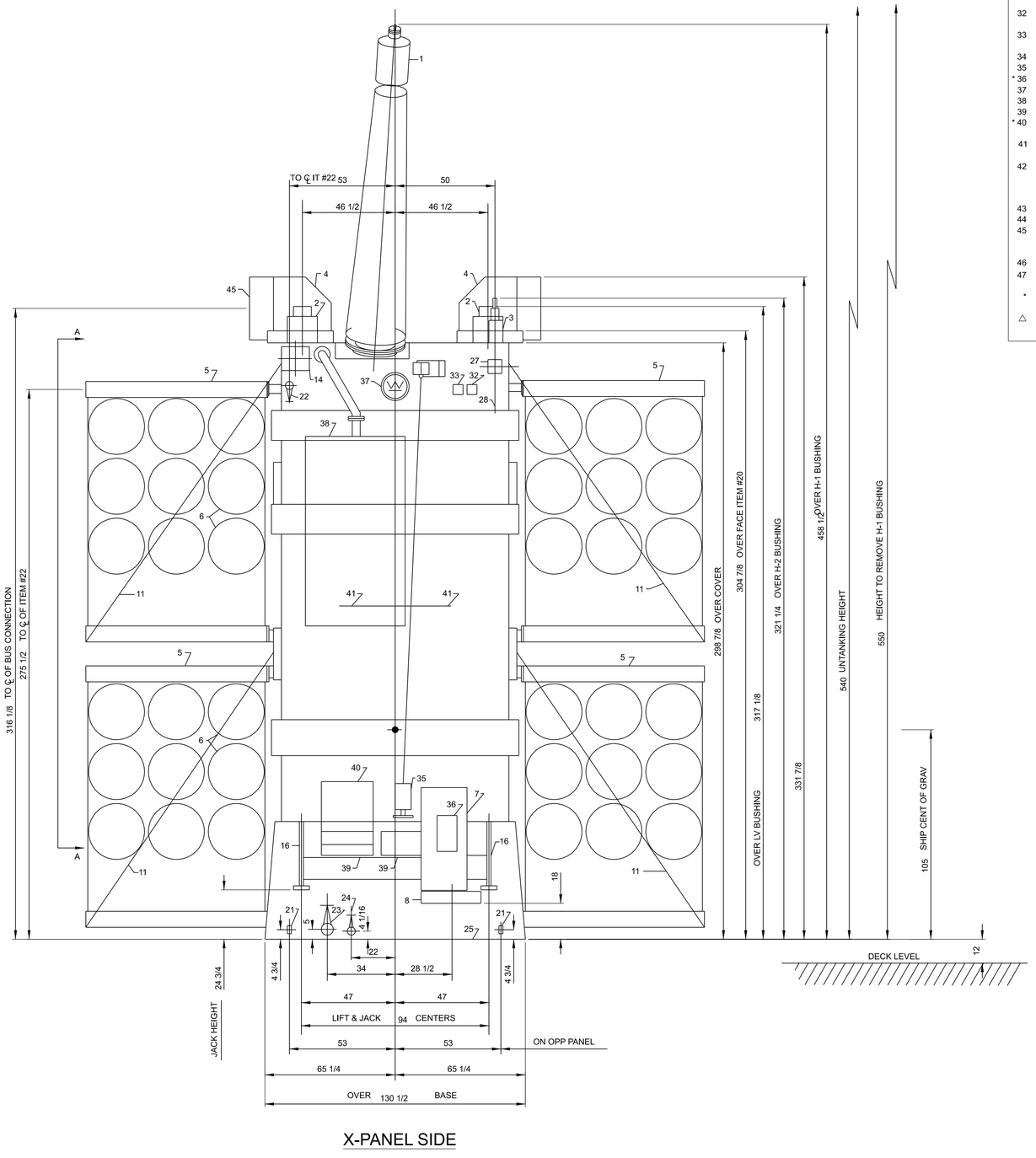

X-PANEL SIDE

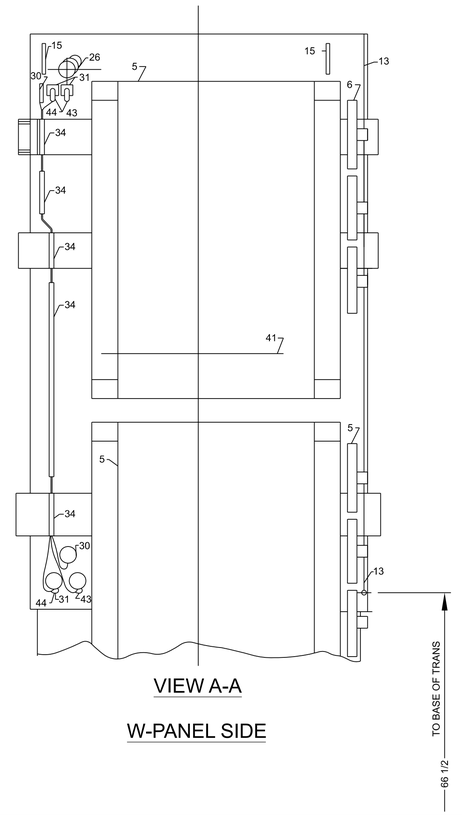

VIEW A-A

W-PANEL SIDE

31	HOT SPOT TEMPERATURE INDICATOR-LIQUID PRESSURE DIAL TYPE-WITH MAXIMUM INDICATING HAND AND CONTACTS FOR FAN CONTROL AND REMOTE BREAKER TRIP. CONTACTS SUITABLE FOR 600 VOLT-AMPERES AT 125 TO 250 VOLTS AC OR 60 WATTS AT 120 TO 250 VOLTS DC LAMP LOAD, 2 TOTAL.
32	HOT SPOT RESISTANCE COIL-10 OHMS AT 25°C-IN X1 WINDING FOR SWITCHBOARD TEMPERATURE INDICATOR.
33	HOT SPOT RESISTANCE COIL-10 OHMS AT 25°C-IN Y1 WINDING FOR SWITCHBOARD TEMPERATURE INDICATOR.
34	THERMOMETER TUBING GUARD.
35	HV NO LOAD TAP CHANGER OPERATING MECHANISM, WITH PROVISION FOR PADLOCK.
* 36	DIAGRAM INSTRUCTION PLATE IM1408-10.
37	DRESS NAMEPLATE.
38	GAS EXPANSION TANK-TO PROVIDE ADDITIONAL GAS SPACE.
39	EPI TRANSFORMER #Y48G24T15D, 2 TOTAL.
* 40	POTENTIAL DEVICE-TYPE PBA-2, SEE INSTRUCTION BOOK 33-357-1, 7 TOTAL PER ORDER, WITH PROVISION FOR MOUNTING ON ALL UNITS.
41	INTERNAL SHIPPING WEDGE RETAINER, PAINTED YELLOW. TO BE REMOVED BY CUSTOMER BEFORE ENERGIZING TRANSFORMER. REPLACE STEEL RETAINING BOLTS WITH PERMALI STUDS-SHIPPED DETAIL.
42	MECHANICAL RELIEF DEVICE WITH SEMAPHORE FOR INDICATING RELIEF DEVICE TRIP AND ALARM CONTACTS FOR INDICATING I RELIEF DEVICE TRIP SUITABLE FOR 1200 VOLT-AMPERES AT 125 TO 250 VOLTS AC, OR 60 WATTS NON-INDUCTIVE LOAD AT 125 TO 250 VOLTS DC, OR 6 WATTS INDUCTIVE LOAD AT 125 TO 250 VOLTS DC.
43	IDENTIFICATION PLATE FOR X1 HOT SPOT.
44	IDENTIFICATION PLATE FOR Y1 HOT SPOT.
45	ONE SET 0F BLANK GASKETS PLATES FOR TEMPORARILY SEALING ENCLOSURE OF ONE LOW VOLTAGE WINDING OF ONE BANK, SHALL BE FURNISHED FOR JOHN DAY PROJECT TRANSFORMERS. THIS IS A TOTAL 0F SIX BLANKING PLATES:
46	AUXILIARY BRACES OK SHIPMENT. TO BE REMOVED BY CUSTOMER BEFORE ENERGIZING TRANSFORMER, 3 TOTAL
47	HORIZONTAL JACKING SURFACES. SEE DETAIL.
*	SEND PRINTS TO CUSTOMER
△	WHEN INSTALLING 54 FIN RADIATORS, USE TEMPORARY BLOCKING UNDER THE OUTER END UNTIL THE DIAGONAL BRACES ARE INSTALLED.

DWG 1M1408-01 SUB 8

NOTES

SEE INSTRUCTION BOOK LM1408-12 FOR INSTALLATION AND MAINTENANCE OF THIS TRANSFORMER.

THIS OUTLINE CAN BE USED FOR ERECTION OR MOUNTING PURPOSES. IT IS NOT TO BE REGARDED AS INDICATING THE EXACT DETAILS OF CONSTRUCTION.

ALL VALVES HAVE THREADED ENDS UNLESS OTHERWISE SPECIFIED.

SLING SPREADERS MUST BE USED WHEN LIFTING CORE AND COILS IN ORDER TO CLEAR THE SUPER-STRUCTURE.

BEFORE BREAKING THE SEAL ON ANY OPENING, BE SURE THE LIQUID IS LOWERED BELOW THE OPENING.

THE CASE IS BRACED FOR FILLING UNDER A FULL VACUUM.

THIS TRANSFORMER HAS A FORM-FIT CASE. THE UPPER SECTION OF THE CASE IS WELDED TO THE LOWER SECTION AS SHOWN ON DS 48-069-16, FIGURE 5. THE CORE AND COILS ARE BRACED IN THE TANK TO WITHSTAND HANDLING, SHIPPING AND OPERATING FORCES. THIS BRACING IS A PERMANENT PART OF THE TRANSFORMER STRUCTURE.

IF IT EVER BECOMES NECESSARY TO REMOVE THE TOP SECTION OF THE CASE, REMOVE THE LIQUID AND CUT THE WELD AT THE FLANGE, AND LIFT THE TOP SECTION OF THE CASE FROM THE TRANSFORMER. THIS EXPOSES THE CORE AND COILS FOR INSPECTION OR REPAIR.

AUXILIARY BRACES ARE USED TO SUPPORT THE TRANSFORMER'S SUPERSTRUCTURE FOR SHIPMENT, REMOVE THESE BRACES BEFORE FILLING THE CASE UNDER VACUUM OR ENERGIZING, SEE DETAIL, DRAWING 1M1408-03

SHIPMENT WILL BE MADE IN NITROGEN IN ITS OWN CASE. BE SURE TO REMOVE DEHYDRATING CONTAINER BEFORE FILLING WITH LIQUID.

CHECK OPERATION OF ALL TAP CHANGER MECHANISMS BEFORE SEALING TRANSFORMER.

THE TRANSFORMER IS EQUIPPED WITH INERTAIRE.

RAILS OR PEDESTALS USED TO SUPPORT TRANSFORMER, OR ROLLERS USED TO MOVE THE TRANSFORMER, MUST BE LOCATED IN OR ACROSS THE DOUBLE CROSS HATCHED AREA. THE TRANSFORMER WEIGHT IS DISTRIBUTED AND SUPPORTED BY THE TANK WALL LOCATED WITHIN THIS AREA. THE PORTION OF THE TRANSFORMER BOTTOM NOT CROSS HATCHED WILL NOT SUPPORT THE TRANSFORMER.

GASKETS UNDER THE FOLLOWING ITEMS ARE TEMPORARY SHIPPING GASKETS. THEY SHOULD BE REPLACED WITH PERMANENT GASKETS SHIPPED WITH THE TRANSFORMER. THESE ITEMS ARE 1, 2, 3, & 38.

THE FOLLOWING ITEMS ARE TO BE REMOVED FOR SHIPMENT: 1, 2, 3, 4, 5, 6, 10, 11,13, 27, 38, & 40. RED INSTRUCTION TAGS WILL BE ATTACHED TO ANY INTERNAL PARTS REQUIRING FIELD TAPING.

7300 GALLONS OF LIQUID ARE REQUIRED TO COVER CORE AND COILS WITH RADIATORS MOUNTED AND 4600 GALLONS WITHOUT RADIATORS.

	APPROXIMATE NET WEIGHT	SHIPPING WEIGHT
CORE AND COILS		
MAIN UNIT	325,000 LBS	325,000 LBS
CASE AND FITTINGS		
MAIN UNIT	150,000 LBS	30,000 LBS
OIL		
MAIN UNIT	115,000 LBS	
TOTAL	590,000 LBS	355,000 LBS

FITTINGS AND DESCRIPTIONS

ITEM	
* 1	HV BUSHING, 1 TOTAL, OUTLINE DWG 471C453, SUB 4, STUD SIZE 1 1/2-12X2 3/4 LG, STUB IS SILVER PLATED.
* 2	LV BUSHINGS, 4 TOTAL, OUTLINE DWG 471C376, LINE #2, SPADES ARE SILVERPLATED.
* 3	HV NEUTRAL BUSHING, 1 TOTAL, DS 48-061-29, STUD SIZE 1 1/2-12X2 1/8 LG, STUD IS SILVERPLATED.
4	ISOLATED PHASE BUS DUCT HOUSING, 4 TOTAL, SEE DETAIL, DRAWING LM1408-03.
5	RADIATORS HAVE 3/4 INCH DRAIN AND VENT PLUGS AND ARE CONNECTED AT THE TOP OF THE TOP MOST RADIATOR AND AT THE BOTTOM OF THE BOTTOM MOST RADIATOR TO SHUT-OFF VALVES ON CASE.
6	FORCED-AIR COOLING FANS. FAN MOTORS ARE 3 PHASE, 60 CYCLES, 240 VOLTS, TOTAL KVA REQUIRED 15.
7	CONTROL CABINET FOR FANS.
8	QUICK-SPLIT JUNCTION BOX WITH CONDUIT COUPLING FOR CUSTOMER'S CONNECTION. SEE DETAIL, DRAWING IM1408-03.
9	INERTAIRE CABINET, BEMOTE MOUNTED. FOR MOUNTING SEE DETAIL, DRAWING IM1408-03.
10	INERTIRE CONNECTIONS ARE 3/8 INCH COPPER TUBING.
11	DIAGONAL TIE RODS FOR SUPPORTING RADIATORS.
12	3/8 INCH VALVES AT FLOOR LEVEL ON INERTAIRE CONNECTIONS.
13	3/8 INCH COPPER TUBING WITH VALVE AT FLOOR LEVEL FOR VENTING GAS SPACE.
14	36 POINT JUNCTION BOX FOR CURRENT TRANSFORMER LEADS.
* 15	EYES FOR LIFTING TOP SECTION OF TANK ONLY. SEE DS 48-069-32, FIGURE 31.
16	COMBINATION JACK LUG AND LIFTING HOOK FOR LIFTING COMPLETE UNIT-2 TOTAL-SEE DETAIL, DRAWING IM1408-03.
* 17	LIFTING EYES FOR UPRIGHTING TRANSFORMER-2 TOTAL-SEE DS 48-069-32, FIGURE 39.
18	COMBINATION JACK LUG, ROCKER AND LIFT HOOK FOR LIFTING COMPLETE UNIT-2 TOTAL-SEE DETAIL, DRAWING IM1408-03.
19	RECTANGULAR MANHOLE 15X32.
20	1 1/2 INCH VALVE FOR FILLING AND VACUUM CONNECTION.
* 21	GROUND PAD ON CASE WALL, 2 TOTAL. SEE DS 48-061-21, FIGURE 3.
22	VALVE 1 1/2 INCH FOR UPPER FILTER PRESS CONNECTIONS.
23	2 INCH GATE VALVE, WALWORTH CAT. #719F, FOR MAIN AND COMPLETE DRAIN.
24	VALVE 1 1/2 INCH FOR COMBINATION LOWER FILTER PRESS CONNECTION AND COMPLETE DRAIN WITH 3/8 INCH SAMPLING DEVICE.
25	BASE WELDED TO CASE. SEE DETAIL, DRAWING IM1408-03.
26	MAGNETIC LIQUID LEVEL GAUGE, 5 1/2" INCH DIAMETER DIAL WITH LOW LIQUID LEVEL ALARM CONTACTS SUITABLE FOR: 600 VOLT-AMPERES AT 125 TO 250 VOLTS AC, OR 60 WATTS AT 125 TO 250 VOLTS DC LAMP LOAD, OR 6 WATTS AT 125 TO 250 VOLTS DC RELAY LOAD.
* 27	SUDDEN PRESSURE RELAY. SEE IL 48-065-1 FOR CONTACT RATINGS, ETC.
28	DRAIN PLUG. CUSTOMER SHOULD OPEN THIS PLUG, DRAIN OIL FROM DUCT AND REPLACE PLUG BEFORE INSTALLING SUDDEN PRESSURE RELAY.
29	DEHYDRATING CONTAINER-TO BE REMOVED BY CUSTOMER BEFORE FILLING CASE WITH LIQUID.
30	LIQUID TEMPERATURE INDICATOR-LIQUID PRESSURE DIAL TYPE-WITH MAXIMUM INDICATING HAND AND ALARM CLOSING CONTACTS SUITABLE FOR 600 VOLT-AMPERES AT 125 TO 250 VOLTS AC OR 60 WATTS AT 120 TO 250 VOLTS DC LAMP LOAD.

LOWER MONUMENTAL LOCKS AND DAM - DA-45-164-CIVENG-66-137
JOHN DAY LOCKS AND DAM, LITTLE GOOSE LOCKS AND DAM, LOWER GRANITE LOCKS AND DAM - DA-45-164-CIVENG-66-136

COMP CODE	
ROUTING	DELV TO

SO	D	IT	CHANGE
1M1408	1M1408-09		
1			
1M1408	1M1408-09		REVISED
2			
1M1408	D-1M1408-09		HT OVER IT #4 WAS 226 IN ADDED HT TO Q.OF BUS CONNECTION ADDED "SEE DWG 1M1408-03"
3		4	
SO 1M1408	D-1M1408-09		HT OVER H-2 BUSH'G WAS 314 1/2 DS-48-061-29 WAS OUTLINE 771H5514
4		*3	
SO 1M1408	D-1M1408-09	21	53" LOC DIM WAS 54" JACK HT WAS 23 3/4"
5		47	ADDED TO DRAWING
SO 1M1408	D-1M1408-09		ADDED RAPS
6			
1M1408	D-1M1408-09	46	WAS 5 TOTAL
7			
SO 1M1408	D-1M1408-09	10, 12 & 13	ITEMS WERE 1/4 IN
8			

PRINTS TO			
1		10	
2		11	
3		12	
4		13	
5		14	
6		15	
7		16	
8		17	
9		18	

TOOL REF DWG
ENGRG REF DWG
REF BK SEC
BOOK # | APPROVED

WESTINGHOUSE ELECTRIC CORPORATION

APPARATUS TRANSFORMER, CLASS OA/FA SHELL FORM OUTDOOR SINGLE PHASE
60 CYCLES KVA 164000/218666, HV 500000 GRD Y/288700, LV #1 13200, LV #2 13200

DIMENSIONS IN INCHES-SCALE NTS | SUB 8

DFTM		APPD		1M1408-01
		APPD		
CHKD		APPD		

TRANSFORMER DIVISION-MUNCIE PLANT — MUNCIE, IND, USA

DWG 1M1408-02 SUB 4

ROUTING	DELV TO

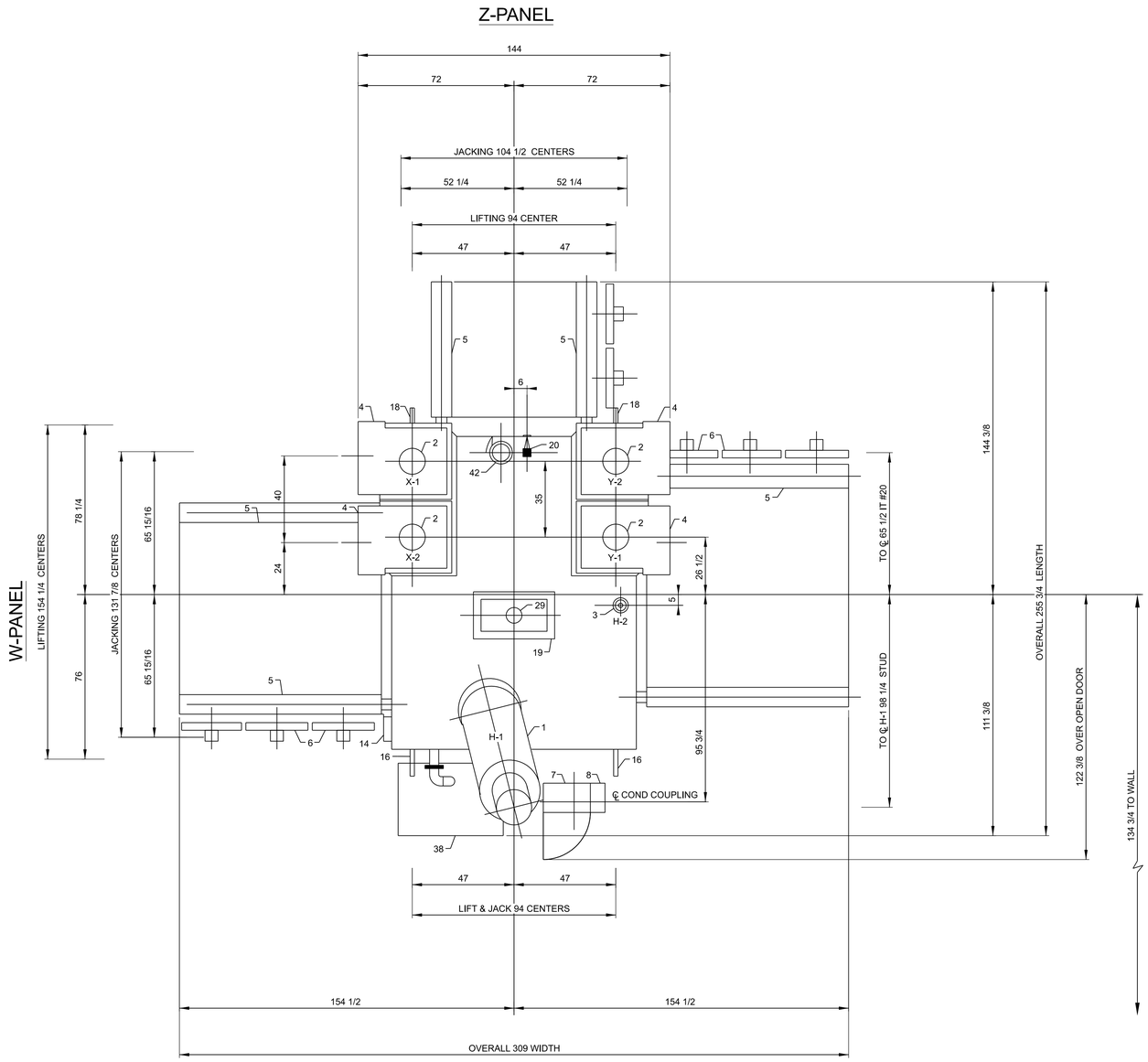

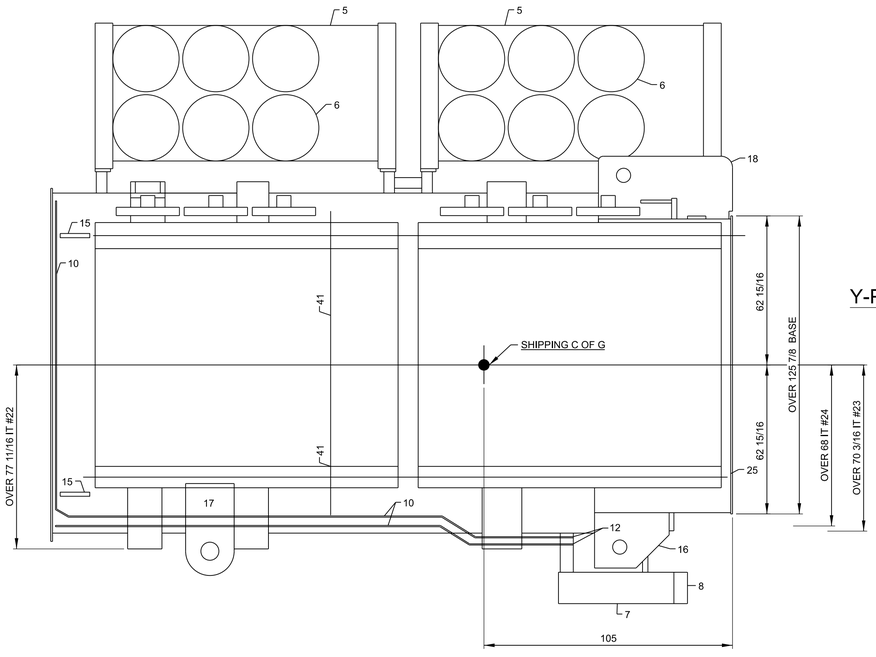

LOWER MONUMENTAL LOCKS AND DAM-DA-45-164-CIVENG-66-137
JOHN DAY LOCKS AND DAM
LITTLE GOOSE LOCKS AND DAM
LOWER GRANITE LOCKS AND DAM
-DA-45-164-CIVENG-66-138

SO	1M1408
D	1M1408-09

IT	CHANGE
1	1M1408 1M1408-09
2	18 JACK CENTER WAS 102 IN
	41 REMOVED FROM PLAN VIEW
	18 SEPERATED ADDED DIM TO WALL 134 3/4 IN FROM ℄ DESIGNATED PANELS
3	1M1408 D-1M1408-09 REV PLAN VIEW OF HOUSING IT #4
4	1M1408 D-1M1408-09 ADDED RADS

PRINTS TO	
1	10
2	11
3	12
4	13
5	14
6	15
7	16
8	17
9	18

TOOL REF DWG A10-A20-A30
ENGRG REF DWG
REF BK SEC
BOOK # APPROVED

WESTINGHOUSE ELECTRIC CORPORATION

APPARATUS TRANSFORMER, CLASS OA/FA SHELL FORM OUTDOOR SINGLE PHASE
60 CYCLES KVA 164000/218666, HV 500000 GRD Y/288700, LV #1 13200, LV #2 13200

DIMENSIONS IN INCHES-SCALE NTS SUB 4

DFTM LAWSON	12/18/65	APPD	12/13/65
		APPD	12/14/65
CHKD	12-13-65	APPD	

1M1408-02

TRANSFORMER DIVISION-MUNCIE PLANT MUNCIE, IND, USA

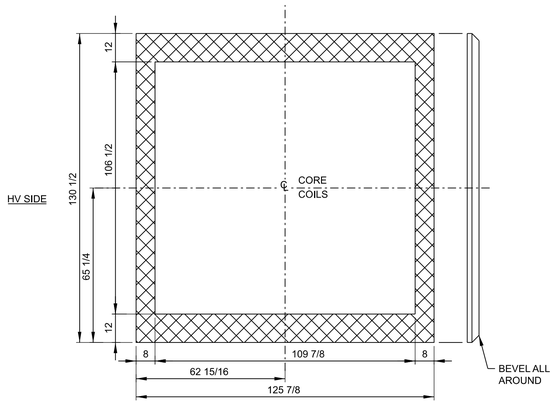

DETAIL OF BASE IT #25

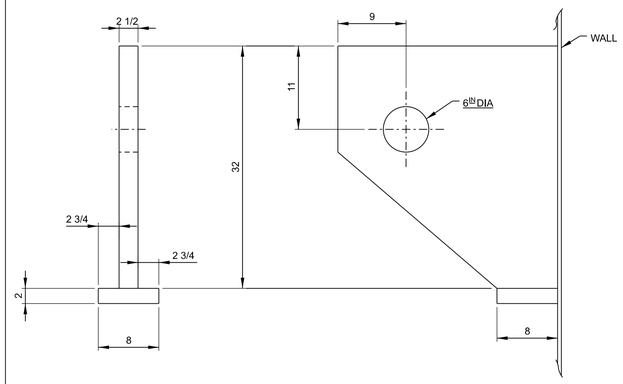

DETAIL OF LIFT HOOK IT #16

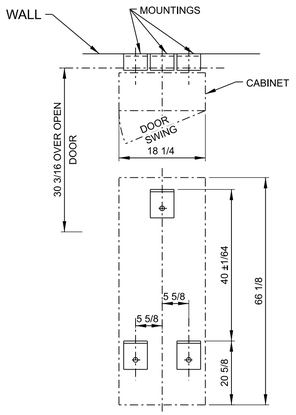

DWG 1M1408-03 SUB 7

COMP CODE	
ROUTING	DELV TO

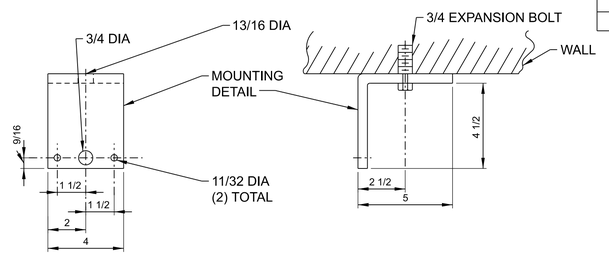

DETAIL OF INERTAIRE MOUNTING IT #9

ALSO SEE DETAIL OF ITEM #18

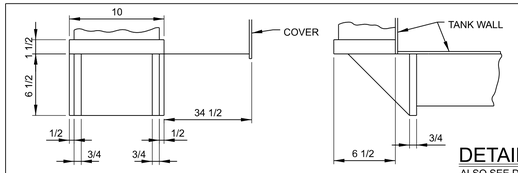

DETAIL OF ITEM #47-B

ALSO SEE DETAIL OF ITEM #18

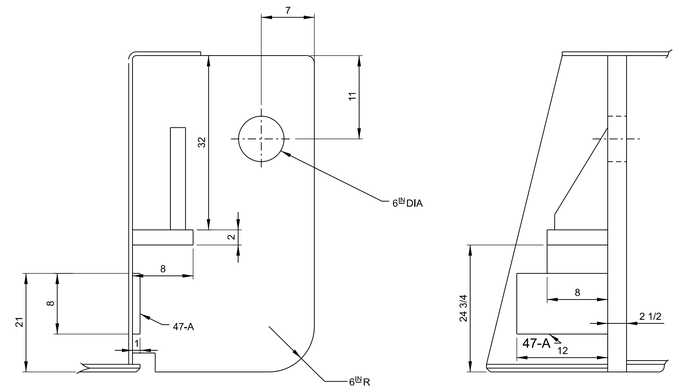

DETAIL OF ROCKERLUG IT #18 & $47-A

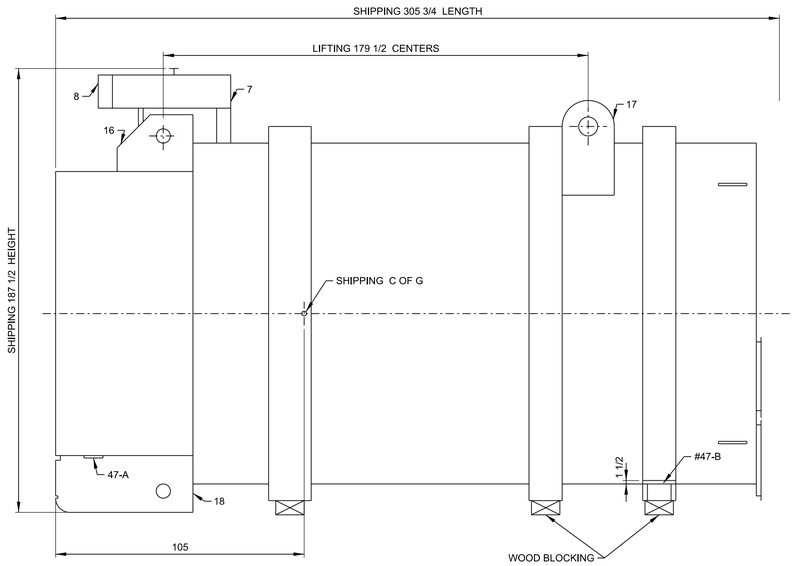

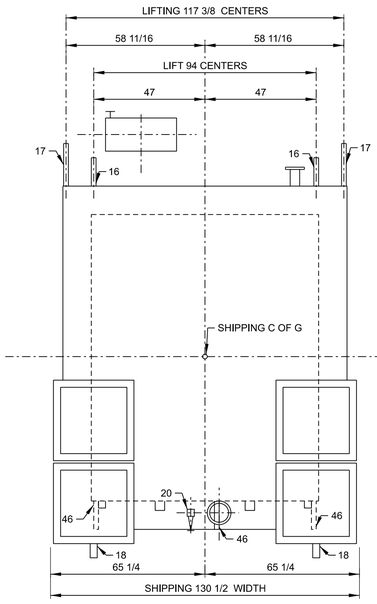

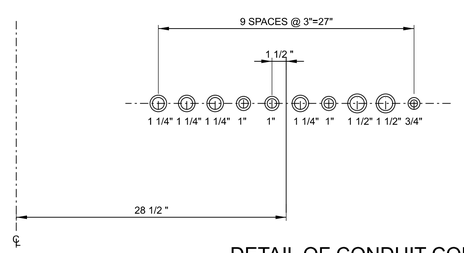

DETAIL OF CONDUIT COUPLINGS IT #8

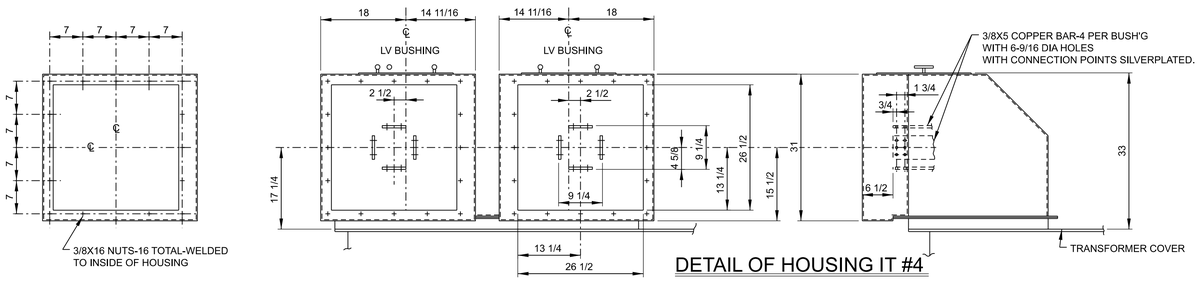

DETAIL OF HOUSING IT #4

LOWER MONUMENTAL LOCKS AND DAM-DA-45-164-CIVENG-66-137
JOHN DAY LOCKS AND DAM
LITTLE GOOSE LOCKS AND DAM
LOWER GRANITE LOCKS AND DAM
-DA-45-164-CIVENG-66-138

			CHANGE
1	SO	1M1408	
	D	1M1408-09	
	IT		
2		1M1408	ITEMIZED ITEMS
		1M1408-09	16, 17 & 18
		18	ADDED DIM 31 1/16
		-	ON DETAIL SK
			ADDED BRACES
			ON SHIPPING SK
		9	REVISED INERT
			MTG DETAIL
3		1M1408	ADDED DETAIL OF
		D-1M1408-09	IT #4 TO DWG
4		SO 1M1408	SHOULD READ 32
		D-1M1408-09	SHIPPING BRACES WERE
		18	ITEMIZED AS 41
5		SO 1M1408	JACK HT WAS 23 3/4"
		D-1M1408-09	ADDED DETAIL OF
			IT #47
6		SO 1M1408	ADDED NOTE
		D-1M1408-09	TO SILVERPLATE
		4	
6		SO 1M1408	WAS 5 TOTAL
		D-1M1408-09	
		46	

PRINTS TO			
1		10	
2		11	
3		12	
4		13	
5		14	
6		15	
7		16	
8		17	
9		18	

TOOL REF DWG
ENGRG REF DWG
REF BK SEC
BOOK # | APPROVED

WESTINGHOUSE ELECTRIC CORPORATION

APPARATUS TRANSFORMER, CLASS OA/FA SHELL FORM OUTDOOR SINGLE PHASE
60 CYCLES KVA 164000/218666, HV 500000 GRD Y/288700, LV #1 13200, LV #2 13200

DIMENSIONS IN INCHES-SCALE NTS — SUB 7

DFTM LAWSON	12/10/65	APPD	12/13/65	1M1408-03
		APPD	12/14/65	
CHKD	12-13-65	APPD		

TRANSFORMER DIVISION-MUNCIE PLANT — MUNCIE, IND. USA

THIS DIAGRAM MUST NOT BE USED TO DETERMINE THE EXACT LOCATION OF APPARATUS, WIRES OR CABLES. ALL APPARATUS IS SHOWN IN DE-ENERGIZED POSITION.

THE MATERIAL SUPPLIED BY THE WESTINGHOUSE ELECTRIC CORPORATION IS ACCORDING TO CONTRACT AND IS NOT MODIFIED BY ANYTHING SHOWN ON THIS DIAGRAM.

DWG. IM1408-04 SUB X2884367

COMP CODE	
ROUTING	DELV TO

		NORM. OPEN CONTACT
		NORM. CLOSED CONTACT
		THERMAL TRIP ELEMENT
		DISCONNECT DEVICE
		OPERATING COIL
		TEST SWITCH
4	COOLER CONTACTOR	
8	CIRCUIT BREAKER	
26Q	HOT OIL THERMOMETER (90°C)	
27	UNDER VOLTAGE RELAY	
43	COOLER CONTROL SWITCH	
49	THERMAL DEVICE	
1	FAN CONTACT (70°C)	
3	TRIP CONTACT (117°C)	
HC	HEATER ELEMENT	
63P	MECHANICAL RELIEF DEVICE	
71Q	OIL LEVEL GAUGE	
88F	FAN MOTOR (WITH THERMOGUARD) (EACH 1/4 HP)	
IA	INERTAIRE	
E	EMPTY CYLINDER	
H	HIGH PRESSURE	
L	LOW PRESSURE	
63	SUDDEN PRESSURE RELAY	
X	SEAL-IN RELAY	
RS	RELAY RESET SWITCH	
CBA	CURR. BAL. AUTO TRANSFORMER	
TS	TEST SWITCH	
HS	HEATER SWITCH	
HT	HEATER THERMOSTAT	
PBA	BUSHING POTENTIAL DEVICE	
SWBD	SWITCHBOARD HOT SPOT	
HC	HEATER ELEMENT	
RC	RESISTANCE ELEMENT	

* ON T1 TRANSFORMER ONLY -- WIRED 49-1-2 AND 49-2-2 (WINDING TEMPS) IN PARALLEL WITH 26Q (OIL TEMP) ALARM CIRCUIT

NOT SUPPLIED ON ALL UNITS

FOR WINDING CONNECTIONS & RATINGS SEE DIAGRAM NAMEPLATE IM1408-10

1200/5 M.R.C.T.	
NOMINAL RATIO	LEADS ON
100 TO 5	X2-X3
200 TO 5	X1-X2
300 TO 5	X1-X3
400 TO 5	X4-X5
500 TO 5	X3-X4
600 TO 5	X2-X4
800 TO 5	X1-X4
900 TO 5	X3-X5
1000 TO 5	X2-X5
1200 TO 5	X1-X5

HOT SPOT C.T.	
NOMINAL RATIO	LEADS ON
900 TO 1	X2-X3
990 TO 1	X1-X3
1090 TO 1	X2-X4
1180 TO 1	X1-X4
1310 TO 1	X2-X5
1600 TO 1	X1-X5

STUDS IN JUNC. BOX "J"

BUS #1 — AUTO-TRANSFER BETWEEN BUS #1 & BUS #2 BOTH SUPPLIES ENERGIZED — BUS #2

90 AMPERE DB-15 BREAKER WITH STANDARD THERMAL-MAGNETIC TRIP (LOCATED ON OPERATING FLOOR)

TRANS. "A" (8-1) | TRANS. "B" (8-1) | TRANS. "C" (8-1) | TRANS. "A" (8-2) | TRANS. "B" (8-2) | TRANS. "C" (8-2)

REAPEATED FOR EACH TRANSFORMER BANK FOR INFORMATION ONLY

NOTES:

XFMR

WINDING	OIL	WINDING
49-1	26Q	49-2

SETPOINTS:
70°C = FANS ON (158°F)
90°C = ALARMS (194°F)
115°C = TRIP (239°F)

CUSTOMER'S 480 V. 3 PH., 60 CY. SOURCE #1

CUSTOMER'S 480 V. 3 PH., 60 CY. SOURCE #2

8-1 (40A) — 8-2 (40A)

MECHANICALLY INTERLOCKED THERMAL MAGNETIC TRIP

"EPT" TRANS 480/240 V. 15 KVA 2 TOTAL

EPT 1 — EPT 2

EP 8-6 TRANS (10A) 240/120V

"43" SWITCH

CONTACT		POSITION A	OFF	M
M	1-3			X
A	2-3	X		
M	4-6			X
A	5-6	X		

X: CONTACT CLOSED

8-3 (20A) — 8-4 (20A) — 8-5 (20A)

To 88F-2 FANS 12 TOTAL

To 88F-3 FANS 18 TOTAL

88F-1 — To FANS 18 TOTAL

LOWER MONUMENTAL LOCKS & DAM DA-45-164-CIVENG-66-137
JOHN DAY LOCKS & DAM
LITTLE GOOSE LOCKS & DAM
LOWER GRANITE LOCKS & DAM
} DA-45-164-CIVENG-66-138

66-C-138 6

APPROVED FOR CONSTRUCTION CORPS OF ENGINEERS, U.S. ARMY NORTH PACIFIC DIVISION 1969 MAY 12 DATE — HYDRO-ELECTRIC DESIGN BRANCH

AS BUILT 16 JUN 71

G.O.# P083650
U.S. ARMY-CORPS OF ENGINEERS G.O.# P083651

SO	IM1408	1
D	IM1408-22	
IT	CHANGE	

2	IM1408	3	IM1408	5	IM1408	6
	Added Lead Markings		Revised Per		G-167866	
	Moved Brk 8-1,2		Austin 4-8-66		Moved Lead X15 From	
	Also Added Lead		Wiesen 4-12-66		J Stud 12 To Stud 11	
	Information		Changed Dwg		Lead X17 From Stud	
	Scheme As Per		Per Letter 4-20-66		17 To 16	
	Cust. Marked Dwg				Lead A36 From CBA-1	
	Austin 3/10/66		IM1408		Pt. 4 To Pt. 8.	
	Wiesen 3/16/66		Added Hot Spot		Lead A39 From CBA-2	
	W. P. M. Donnell 3/16/66		C.T.'s Ratio Table		Pt. 4 To Pt. 8.	
	R.S. Swanson 3-16-66		Austin 1/1967		Lead A42 From CBA-3	
					Pt. 6 To Pt. 8.	
			Wiesen 1-17-67		Lead A45 From CBA-4	
			W. P. M. Donnell 1/17/67		Pt. 6 To Pt. 8.	
			R.S. Swanson 1/17/67		N. Roberts 2/13/67	
					Wiesen 2/15/67	
					W. P. M. Donnell 2/15/67	
					R.S. Swanson 2-15-67	
					R.S. Swanson 4-18-67	

7		8		9		
IM1408		IM1408		AS CONSTRUCTED		ADDED 49X
G 163563		Rev. 8-4" & 8-6" Wks.		DBS HEDB		RELAY 49X
8-4" & 8-2" BRKS. WERE (20A)		A 150mm Brk.		4/14/176		6/4/192
D. STEWART 3-25-69		CARPENTER 11-8-67				
WIESEN 3-26-69		WIESEN 11-8-67				
W. P. M. Donnell 3/26/69		W. P. M. Donnell 11/8/67				
R.S. Swanson 3/26/69		R.S. Swanson 11/8/67				

AS-BUILT
RE-WIRE
TRANSFORMER #1
J. DAVIN
6-3-2004

PRINTS TO			
1	10	TOOL KEY DWG	
2	11	ENGRG CONN. DIAG	
3	12	REF DWG IM1408-05	
4	13	REF BK SEC	
5	14	BOOK #	APPROVED
6	15		
7	16		
8	17		
9	18		

WESTINGHOUSE ELECTRIC CORPORATION

APPARATUS OA/FA TRANSFORMER CONTROL SCHEMATIC WIRING DIAGRAM

DIMENSIONS IN INCHES - SCALE NTS — SUB X2884367

DFTM WIESEN 4/26/66 — APPD W. P. M. Donnell 4/26/66

CHKD — APPD R.S. Swanson 12/23/66

IM1408-04

TRANSFORMER DIVISION · MUNCIE PLANT — MUNCIE, IND. U.S.A.

762C801

N:\ADD Drawings\SCHEMATICS\66-c-138\transformer control schematic.dgn
09-JUN-2004 15:01

WIRE CONNECTIONS EXTERNAL TO CONTROL CABINET

WIRE CODE	DESTINATION FROM		TO		FROM		WIRE SIZE	SUB
A48	EPT-1	X1	4	3	EPT-2	X1	10	2
A49	EPT-1	X2	4	5	EPT-2	X2	10	2
A5	A	5	49-1	D	49-2	D	12	
A6	A	6	49-1	E	49-2	E	12	2
A13	8-3	2	88F-1	A	88F-1A	A		3
A14	8-3	4	88F-1	B	88F-1A	B		
A15	8-3	6	88F-1	C	88F-1A	C		
A16	8-4	2	88F-2	A	88F-2A	A		
A17	8-4	4	88F-2	B	88F-2A	B		
A18	8-4	6	88F-2	C	88F-2A	C		
A19	8-5	2	88F-3	A	88F-3A	A		
A20	8-5	4	88F-3	B	88F-3A	B		
A21	8-5	6	88F-3	C	88F-3A	C		
A50	EPT-1	X3	4	7	EPT-2	X3	10	2 3
A27	8-1	2	EPT-1	H1				
A28	8-1	4	EPT-1	H2				
A29	8-1	6	EPT-1	H3				
A30	8-2	2	EPT-2	H1				
A31	8-2	4	EPT-2	H2				
A32	8-2	6	EPT-2	H3				
A37	TS-1	3	HC-1	B			12	
A38	TS-1	1	HC-1	A				
A40	TS-2	3	SWBD-1	B				
A41	TS-2	1	SWBD-1	A				
A43	TS-3	3	HC-2	B				
A44	TS-3	1	HC-2	A				
A46	TS-4	3	SWBD-2	B				
A47	TS-4	1	SWBD-2	A				
E1	E	1	63	A	(A)			
E2	E	2	63	C	(A)			
E12	E	12	63	B	(A)			
W13	W	13	J	1			10	
W14	W	14	J	2				
W15	W	15	J	3				
W16	W	16	J	4				
W17	W	17	J	5				
W19	W	19	J	6				
W20	W	20	J	7				
W21	W	21	J	8				
W22	W	22	J	9				
W23	W	23	J	10				
W31	W	31	49-1	A			12	
W32	W	32	49-2	A				
W33	W	33	49-1	C	49-2	C		
W35	W	35	PBA	W2	(C)			
W37	W	37	SWBD-1	D	~~SWBD-1~~	~~E~~		2
~~W37~~	~~SWBD-1~~	~~E~~	~~SWBD-1~~	~~F~~				2
W38	W	38	SWBD-1	E	SWBD-1	F		2
W39	W	39	SWBD-1	C				
W40	W	40	SWBD-2	D	~~SWBD-2~~	~~E~~		2
~~W40~~	~~SWBD-2~~	~~E~~	~~SWBD-2~~	~~F~~				2
W41	W	41	SWBD-2	E	SWBD-2	F		2
W42	W	42	SWBD-2	C				
W43	63P	C	W	43	26Q	E		5
W43	W	43	71Q	C				
W44	W	44	71Q	A				
W45	W	45	26Q	D				5
W46	W	46	63P	A				
W49	W	49	PBA	S1	(C)			
W50	W	50	PBA	S2	(C)			
W51	W	51	PBA	S3	(C)		12	
X12	HS-2	1	PBA	W1	(C)		12	
X15	CBA-1	X2	J	11			10	4
X16	CBA-2	X1	J	15				
X17	CBA-3	X2	J	16				4
X18	CBA-4	X1	J	20				

(A) Connect To Panel Side of "E" Block

(C) To Be Wired only When "PBA" Is Supplied

JUNCTION BOX "J"

36 POINT JUNCTION BOX

NO'S. 1 TO 36

FOR CONNECTIONS TO JUNCTION BOX SEE DWG. 1M1408-04

DWG 1M1408-05 SUB X1345

COMP. CODE	
ROUTING	DELV. TO

WIRE CONNECTIONS ON STATIONARY PANEL "A"

WIRE CODE	DESTINATION FROM		TO		FROM		WIRE SIZE	SUB
2	A	2	8-6	2	27-2	2	12	
2	27-2	2	4	2	49X	7		
3	A	3	8-6	1				
4	A	4	8-6	3				
5	A	5	8-6	4	43	2		
5	43	2	43	1	43	4		2
6	A	6	43	5				
7	A	7	8-1	7				
8	A	8	8-2	7				
9	A	9	8-2	8	8-1	8		
10	A	10	27-1	5				
11	A	11	27-2	5				
12	A	12	27-2	3	27-1	3		
23	4	4	8-3	1	8-4	1	10	2
23	8-4	1	8-5	1			12	
24	4	6	8-3	3	8-4	3	10	2
24	8-4	3	8-5	3			12	
25	4	8	8-3	5	8-4	5	10	2
25	8-4	5	8-5	5			12	
34	27-2	1	43	3				
35	4	1	43	6				
49	4	5	27-1	1				
50	4	7	27-1	2				2
35	43	6	49X	2				
51	4	1	49X	3				
52	49X	1	8-6	4				
53	8-1	2	8-2	2				
54	8-1	4	8-2	4				
55	8-1	6	8-2	6				

STATIONARY PANEL "A"

WIRE CONNECTIONS IN CONTROL CABINET "W"

WIRE CODE	DESTINATION FROM		TO		FROM		WIRE SIZE	SUB
A2	GRD	-	A	2	~~8-6~~	~~2~~	12	2
A3	A	3	EP	X4				
A4	A	4	EP	X1				
A36	TS-1	2	CBA-1	8				4
A37	TS-1	3	CBA-1	1				
A39	TS-2	2	CBA-2	8				4
A40	TS-2	3	CBA-2	1				
A42	TS-3	2	CBA-3	8				4
A43	TS-3	3	CBA-3	1				
A45	TS-4	2	CBA-4	8				4
A46	TS-4	3	CBA-4	1				
A49	4	5	EP	H1				
A50	4	7	EP	H4				
W25	W	25	A	7				
W26	W	26	A	8				
W27	W	27	A	9				
W28	W	28	A	10				
W29	W	29	A	11				
W30	W	30	A	12				
W35	W	35	HTR	1				
W36	W	36	HS-2	2	(C)			
W36	W	36	HS-1	2				
W62	W	62	8-1	3			10	2 3
W63	W	63	8-1	5				
W64	W	64	8-2	1				
W65	W	65	8-2	3				
W66	W	66	8-2	5				
X10	HS-1	1	HT	2			12	
X11	HT	1	HTR	2				
X13	CBA-1	X1	CBA-2	X2				
X14	CBA-3	X1	CBA-4	X2				
X15	GRD	—	CBA-1	X2	CBA-3	X2		
W61	W	61	8-1	1			10	2 3
~~A5~~	~~A~~	~~5~~	~~66~~	~~1~~			~~12~~	2

Control Cabinet "W"

OIL TEMP (ALARM) 90°C

NOTES:

70°C = FANS ON (158°F)

90°C = ALARMS (194°F)

115°C = TRIP (239°F)

"PBA"

FOR WIRING OF PB SEE INSTRUCTION LEAFLET

S1 S2 S3 W1 W2

Not Supplied on All Units

(B) Shorting Block

LOWER MONUMENTAL LOCKS & DAM DA-45-164-CIVENG-66-137

JOHN DAY LOCKS & DAM, LITTLE GOOSE LOCKS & DAM, LOWER GRANITE LOCKS & DAM } DA-45-164-CIVENG-66-138

G.O. #PO-83650

U.S. ARMY - CORPS. OF ENGINEERS G.O. #PO-83651

AS BUILT

APPROVED FOR CONSTRUCTION CORPS OF ENGINEERS, U.S. ARMY NORTH PACIFIC DIVISION

DATE 1969 DEC 1

BY Glenn R. Meloy HYDRO-ELECTRIC DESIGN BRANCH

G. Milam 16 July 71

S O	D	IT.	CHANGE
1M1408	1M1408-29	1	1M1408 Removed "ES" Changed Wiring & Wire Sizes As Indicated By No. in Sub Column Austin 4-18-66 Wiesen 4/22/66
		2	1M1408 G-88805 Changed Wire Sizes As Indic By No. in Sub Col. Austin 1-17-67 Wiesen 1-17-67
		3	
		4	1M1408 G-67806 Changed Leads In External & Control Cab. "W" Charts Per Sub 4. N. Roberts 2/13/67 Wiesen 2/15/67
		5	1M1408 Changed Picture of "26Q" to Line Up With Instrument Changed Ext. Chart As Indicated By Sub 5 In Sub Col. D. Stewart 11-5-69 Wiesen 11-5-69
		6	As Constructed DBS HEDB 4-14-76
		7	Added Aux Relay 49X 6-4-92

CHARTS OF THE WIRE CONNECTIONS ADJOIN THE PHYSICAL LAYOUT OF THE PANEL, COMPARTMENT, OR GENERAL AREA TO WHICH THEIR LISTINGS APPLY.

WIRE CODE NO'S. CORRESPOND TO THOSE APPEARING ON THE SCHEMATIC DIAGRAM.

"X" PLACED AT THE DEVICE TERMINAL INDICATES UNUSED TERMINAL.

EXPLANATION

WIRE CONN. ON PANEL "C"

WIRE CODE	DESTINATION FROM		TO		FROM	
1	L	5	R	4		
2	L	6	L	2	R	1

DEVICE TERMINAL*

PRINTS TO			
1		10	
2		11	
3		12	
4		13	
5		14	
6		15	
7		16	
8		17	
9		18	

TOOL REF DWG

ENGRG REF DWG Schematic 1M1408-04

REF BK SEC

BOOK # | APPROVED

WESTINGHOUSE ELECTRIC CORPORATION

APPARATUS OA/FA Transformer Control Connection Wiring Diagram

DIMENSIONS IN INCHES—SCALE NTS | SUB X1345

DFTM Austin 3/10/66 | APPD W.P. McDonell 3/17/66

APPD R.S. Farmer 3/18/66

CHKD Wiesen 3/10/66 | APPD

1M1408-05

TRANSFORMER DIVISION—MUNCIE PLANT | MUNCIE, IND., U.S.A.

ENGRG DEPT FORM NO. 32077

PR 6318-1162

N:\CADD Drawings\SCHEMATICS\66-c-138\transformer control wiring diagram.dgn 09-JUN-2004 15:03

66-C-138 S.D. 7

DWG. NO. DEB60109221

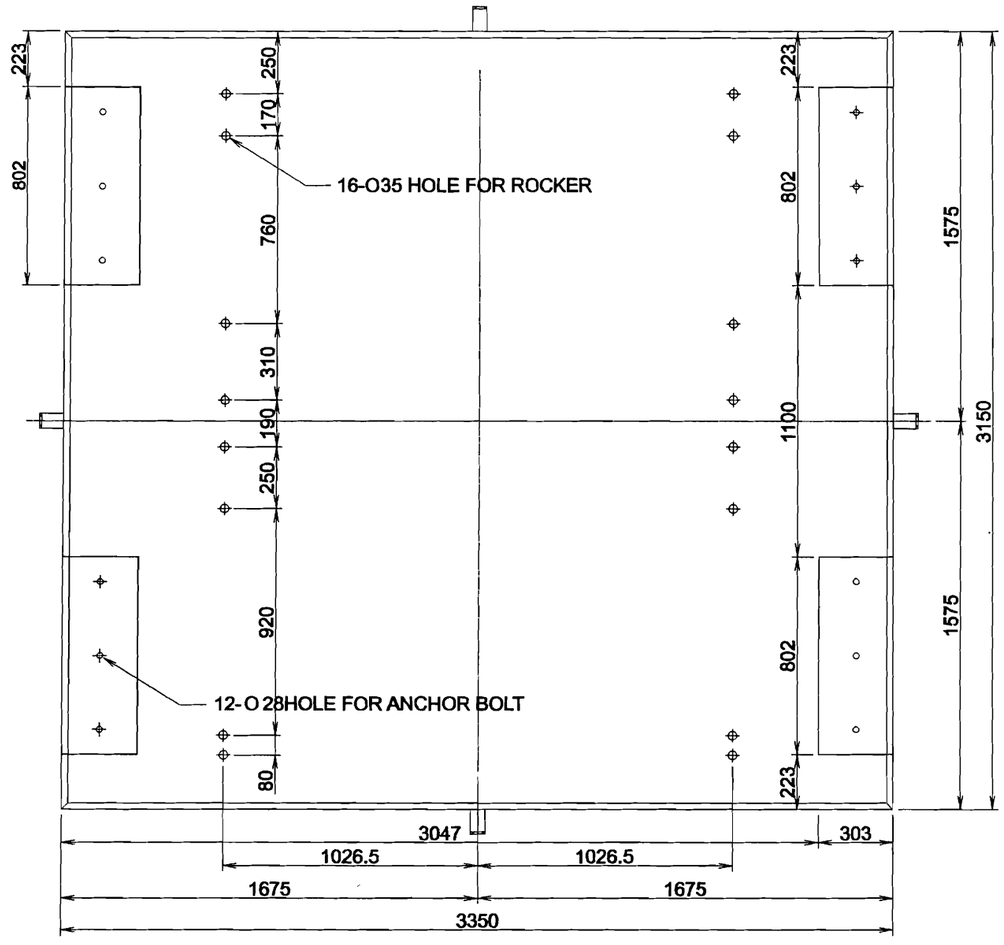

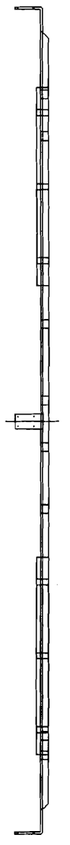

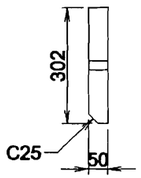

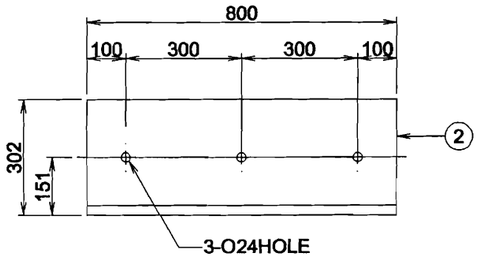

PAD FOR ANCHOR

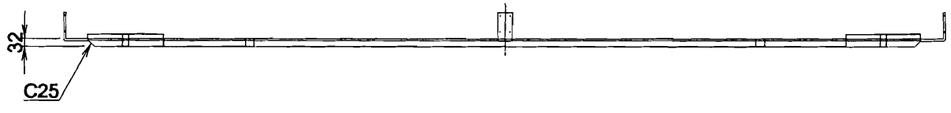

US ACE/ Little Goose (TA80097205)
1Ph, 60Hz 13.2/500kV 54.7/109.334MVA ONAN/ONAF DETC

TYPE					DWG. NAME: TANK BASE			
DRAWN	DESIGNED	CHECKED		APPROVED	THIRD ANGLE PROJECTION	SCALE N / S		
					REF. DWG. NO.			REV. NO.
					DWG. NO.			△

CHANGE

FOR INFORMATION ONLY

US Army Corps of Engineers
Walla Walla District

Symbol	Description	Date	Appr. Symbol	Description	Date	Appr.

DATE: 2 APRIL 2007
DESIGNATION NO: 07-B-0015
CONTRACT NO: DACW68-05-D-0006 TO-3
DESIGNED BY:
DRAWN BY:
CHKED BY:
SUBMITTED BY:
FILE NO: SHOP2

U.S. ARMY ENGINEER DISTRICT
CORPS OF ENGINEERS
WALLA WALLA, WASHINGTON

LITTLE GOOSE LOCK AND DAM
SNAKE RIVER, OREGON, WASHINGTON AND IDAHO
TRANSFORMER STORAGE PAD
TANK BASE

Sheet number:
I-003
VOLUME 1

L:\LGA\CAD\LTSP\INFO-ONLY\LTSPFIO_03.DGN

BORDER SIZE IS ANSI D $TIME DATE AND TIME PLOTTED:02-APR-2007 15:15 DESIGN FILE:L:\LGA\CAD\LTSP\INFO-ONLY\LTSPFIO_03.DGN SCALE$SCALE$ USERNAME$USER$

DWG. NO. **DEB6010999**

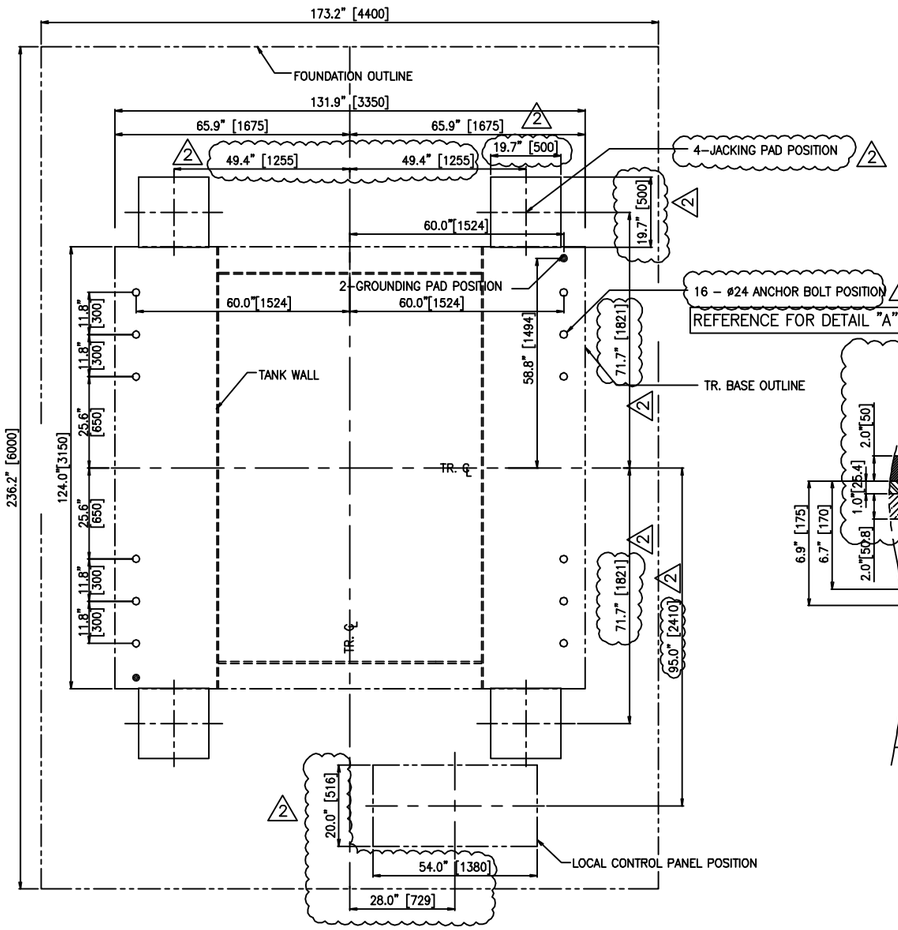

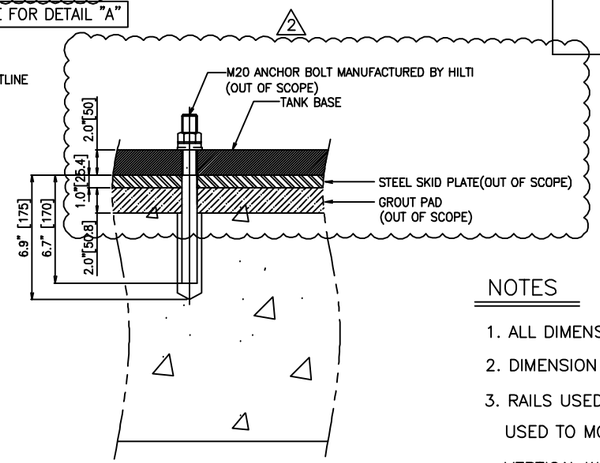

DETAIL "A"

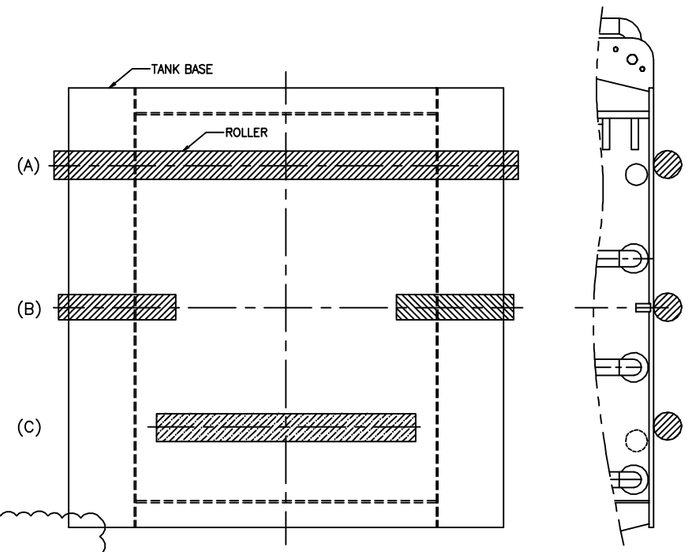

(A) OR (B) IS ACCEPTABLE
(c) IS NOT ACCEPTABLE

NOTES

1. ALL DIMENSION ARE IN INCHES [MILLIMETERS].
2. DIMENSION & WEIGHT TOLERANCE : ± 3%
3. RAILS USED TO SUPPORT THE TRANSFORMER MAIN BODY, OR ROLLERS USED TO MOVE THE TRANSFORMER MAIN BODY MUST BE UNDER THE TANK VERTICAL WALL. THE TRANSFORMER MAIN BODY WEIGHT IS DISTRIBUTED AND SUPPORTED BY THE TANK WALL. THE PORTION OF THE TANK BOTTOM BETWEEN THE WALLS WILL NOT SUPPORT THE TRANSFORMER.

CHANGE		
1	1. UPDATED WITH CUSTOMER'S REQUEST.	2006. 12. 26.
	DRAWN: BAE 06.12.26. M. S	CHECKED: BAE 06.12.26. Y. B	APPROVED: HAM 06.12.26. Y. D
2	1. REVISED IN ACCORDANCE WITH US ACE'S COMMENTS.	2007. 03. 16.
	DRAWN: LIM 07.03.16. Y. Y	CHECKED: BAE 07.03.16. Y. B	APPROVED: HAM 07.03.16. Y. D

1ø 60Hz 500/13.2-13.2KV 82/109.333MVA Y-D-D "LITTLE GOOSE"							
CONTRACT No. : W912EF-06-C-0022							
TYPE: POWER TRANSFORMER					DWG. NAME: FOUNDATION		
DRAWN	CHECKED	CHECKED		APPROVED	THIRD ANGLE PROJECTION	SCALE N / S	DATE 2006.10.18.
KIM 06.10.17. J. H.	CHO 06.10.17. H. R.	BAE 06.10.17. Y. B.		HAM 06.10.17. Y. D.	REF. DWG. NO.		REV. NO.
HICO HYOSUNG CORPORATION					DWG. NO.	DEB6010999	2

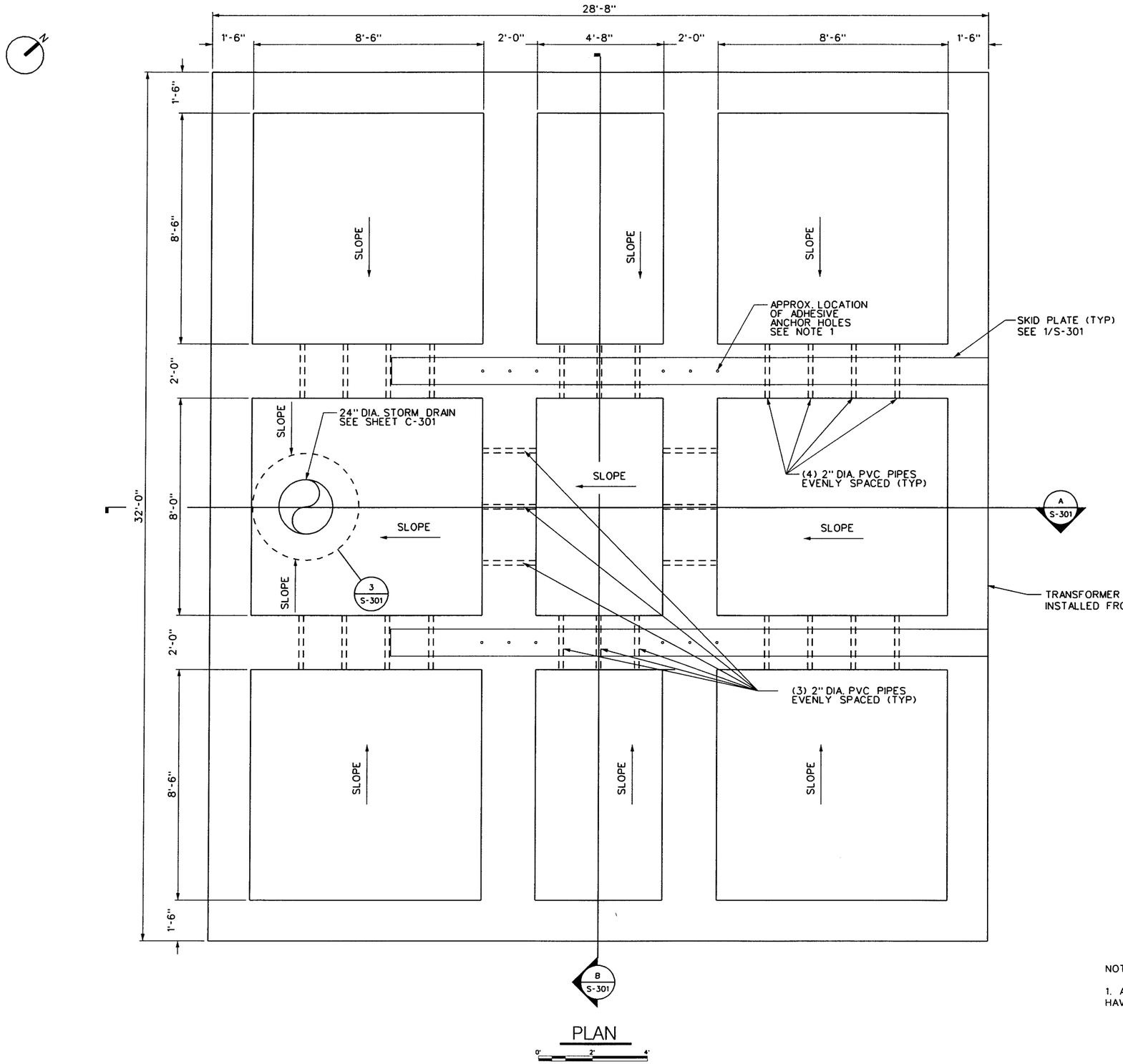

NOTES :

1. ADHESIVE ANCHORS TO BE INSTALLED AFTER TRANSFORMERS HAVE BEEN DELIVERED. SEE SPECIFICATIONS. (OPTIONAL BID ITEM)

US Army Corps of Engineers
Walla Walla District

Symbol	Description	Date	Appr
A	AS CONSTRUCTED	3/23/10	KS

DESIGNED BY: WALTON
DWN BY: KS
CHKED BY: N
SUBMITTED BY: BOB KOLLEN/CHECK
DATE: 2 APRIL 2007
SCALES: SEE SEC.
DATE: 2 APRIL 2007
SOLICITATION NO. 07-B-0015
CONTRACT NO. 06-D-0006 TO-3
FILE NO. LGB-1-13-1/1

U.S. ARMY ENGINEER DISTRICT
CORPS OF ENGINEERS
WALLA WALLA, WASHINGTON

LITTLE GOOSE LOCK AND DAM
SNAKE RIVER, OREGON, WASHINGTON AND IDAHO
TRANSFORMER STORAGE PAD

TRANSFORMER PAD
PLAN VIEW

Sheet number:
S-101
VOLUME 1

L:\LGA\CAD\LTSP\LTSPS-101---.DGN

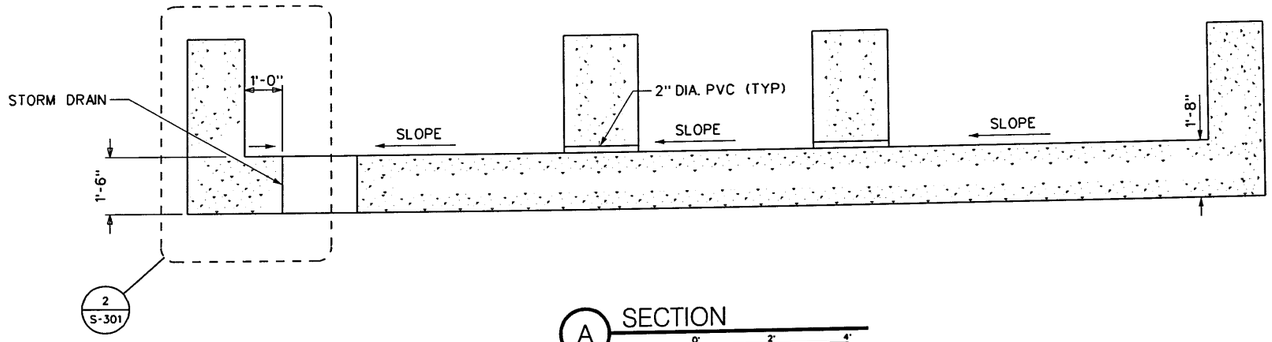

A SECTION

0" 2" 4"

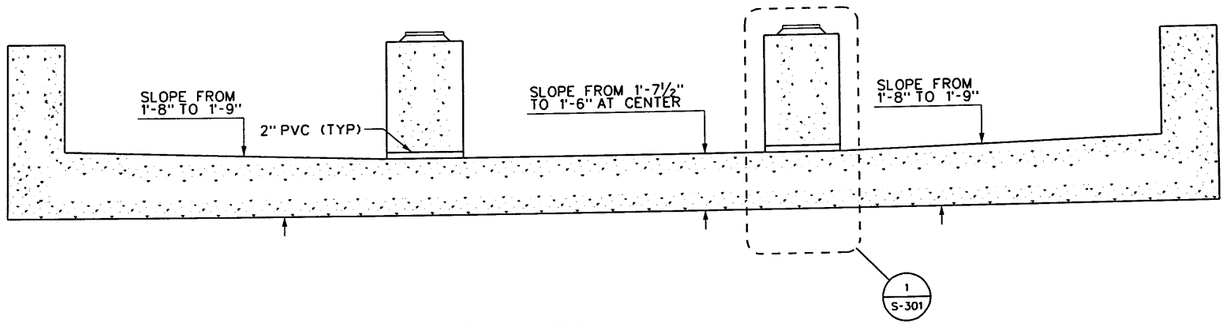

B SECTION

0" 2" 4"

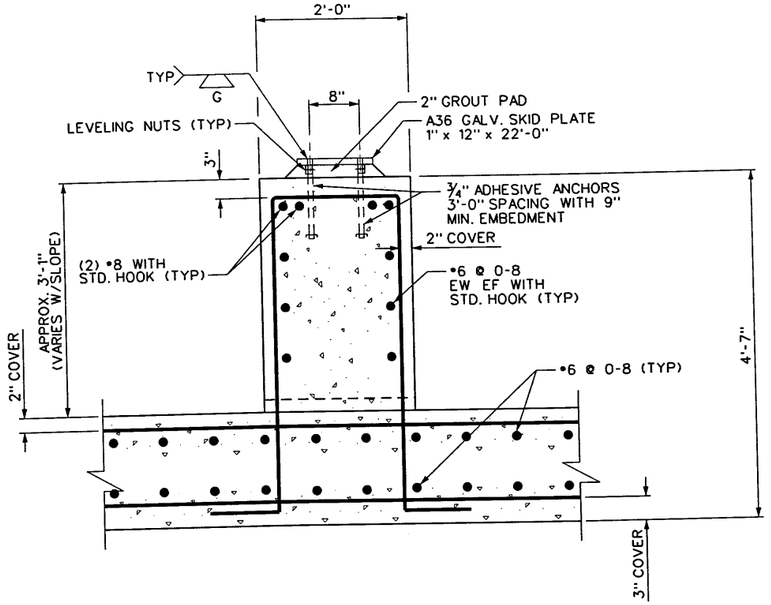

1 DETAIL

0" 1" 2"

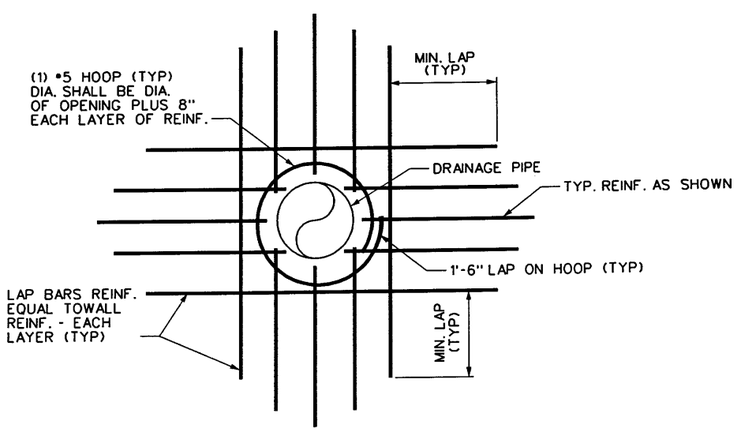

REF S-101 3 OPENING REINFORCING FOR DRAINAGE PIPE

NOT TO SCALE

NOTES :

1. ALL SPLICES IN REINFORCEMENT SHALL BE 28", AND SHALL BE STAGGERED BY 12" MIN.
2. ALL REINFORCING SHALL BE 60 ksi STEEL.
3. EW EF - EACH WAY EACH FACE.
4. SEE SPECIFICATIONS FOR SKID PLATE INSTALLATION TOLERANCES.
5. NUMBER OF ADHESIVE ANCHOR BOLTS: TWELVE (12).
6. ADHESIVE ANCHOR BOLT TYPE: HIT-RE500 HAS-E-R THREADED ANCHOR ROD/STAINLESS STEEL A4-70 M20 WITH OVERSIZED WASHERS, OR APPROVED EQUAL. (CONTRACTOR MAY ROUND UP TO THE NEAREST US SIZE, ⅞" STAINLESS STEEL).

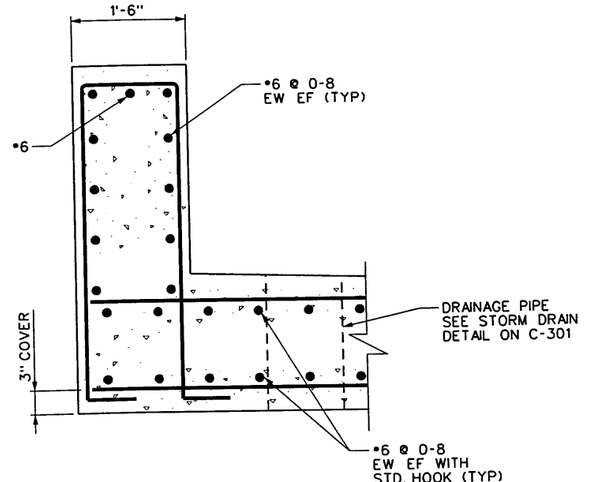

2 DETAIL

0" 1" 2"

US Army Corps of Engineers
Walla Walla District

Symbol	A	Description	Date	App'd
		AS CONSTRUCTED	3/31/10	

DESIGNED BY: WALTON
DRAWN BY: KS
CHKED BY: N
SUBMITTED BY: BOB HOLLENBECK CHIEF, STRUCT. DES. SEC.
DATE: 2 APRIL 2007
SOLICITATION NO. 07-B-0015
CONTRACT NO. 06-D-0006 TO-3
FILE NO. LGB-1-13-1/2

U.S. ARMY ENGINEER DISTRICT
CORPS OF ENGINEERS
WALLA WALLA, WASHINGTON

LITTLE GOOSE LOCK AND DAM
SNAKE RIVER, OREGON, WASHINGTON AND IDAHO

TRANSFORMER STORAGE PAD

TRANSFORMER PAD
FLEXURAL STEEL REINFORCEMENT

Sheet number:
S-301
VOLUME 1

L:\LGA\CAD\LTSP\LTSPS-301---.DGN

BORDER SIZE IS ANSI D

8:41:20 AM DATE AND TIME PLOTTED:5/26/2010

DESIGN FILE: L:\LGA\CAD\LTSP\LTSPS-301---.DGN

SCALE$SCALE$ USERNAME$USER$

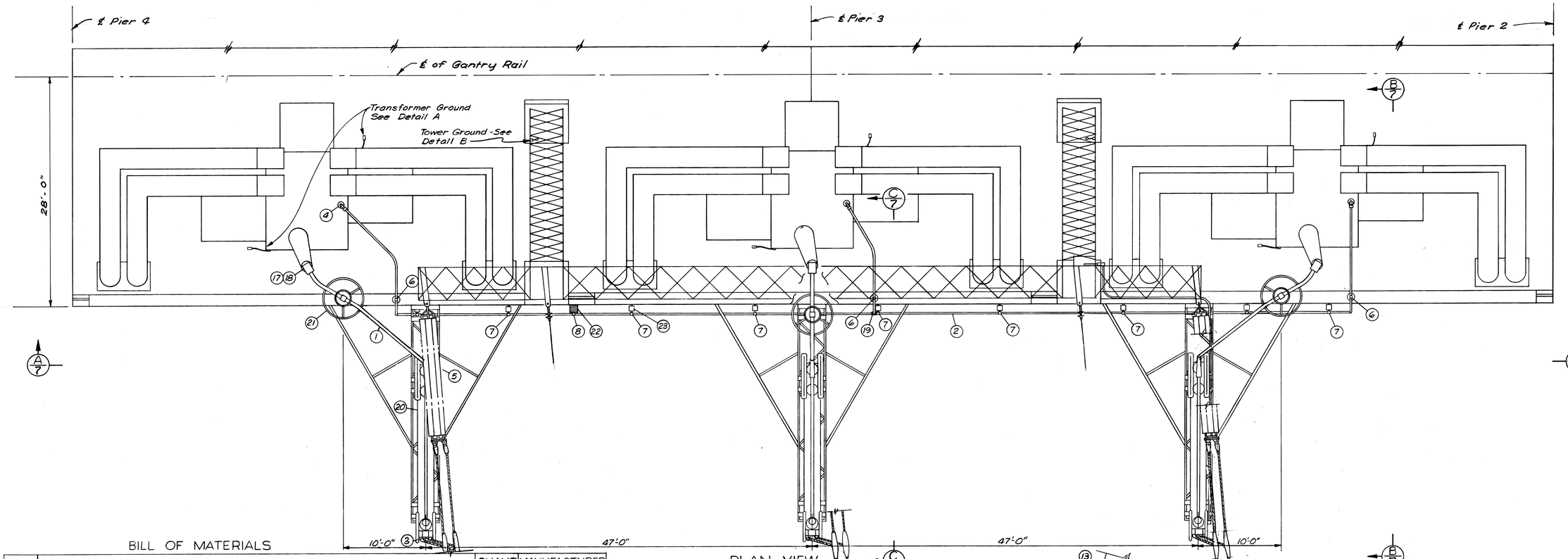

PLAN VIEW
Scale: 3/16"=1'-0"

BILL OF MATERIALS

ITEM NO	DESCRIPTION	QUANTITY	MANUFACTURER OR EQUAL
1	Tubular Conductor, aluminum, 4" I.P.S.	70 ft.	Alcoa Alloy 6063-T6
2	Tubular Conductor, aluminum, 2" I.P.S.	180 ft.	Alcoa Alloy 6063-T6
3	Terminal Adapter (see Detail D)	3	
4	Expansion Stud Connector, 1½" copper Stud, 12 threads per inch to 2" al bus	3	Burndy XD-90W
5	Expansion Terminal Connector, without alignment guide, 4" I.P.S. to 4 hole pad	3	Burndy XAL-90W
6	Bus Support Clamp, aluminum, 2" I.P.S. tightfit, 3" bolt circle	3	Alcoa 12006
7	Bus Support Clamp, aluminum, 2" I.P.S. slipfit, 3" bolt circle	9	Alcoa 12906
8	T-Connector, 2" aluminum tubing run 500 MCM copper cable tap	1	Burndy NT1834W
9	Rigid Steel Conduit & fittings as req'd - ¾", 1", 1¼" & 2"		
10	500 MCM Copper Cable Terminal, 2-hole pad	10	Burndy NA34-2N
11	500 MCM Copper Cable Terminal, 4-hole pad (drill to suit)	7	Burndy NAR
12	500 MCM Copper Ground Cable, lengths as required		
13	Ground Connector, 500 MCM to flat bar	2	Burndy GCM 34
14	Parallel Clamp, 500 MCM to 500 MCM cable	3	Burndy CP3434
15	Conduit Clamp, ½"	9	Steel City PC
16	500 MCM Copper Cable Terminal, 1 hole pad	2	Burndy NA34
17	Stud Connector, ½" copper stud, 12 threads per inch	3	I-T-E GSF-14
18	Expansion Fitting Assembly, corona shielded, universal angle, 4" al bus to stud connector	3	I-T-E WASP-X-HV-450-16
19	T-Connector, 2" aluminum tube run, 2" aluminum tube tap	1	Alcoa 11006-6
20	Disconnect Switch, complete With hydraulic system, 3 pole	1	Furnished by Gov't
21	Lightning Arrester, complete With line and ground terminals	3	Furnished by Gov't
22	Current Transformer	1	G.E. type JKW-5
23	Insulators, 110 BIL, 3" bolt circle	12	Furnished by Gov't
24	Rigid Steel Conduit & fittings, 3½-inch (or 4-inch)	100 ft.	

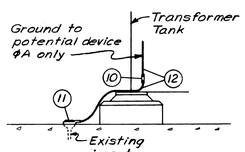

DETAIL A
Typical Transformer Ground
(2 per transformer)
No Scale

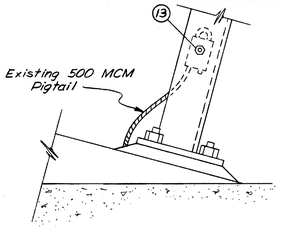

DETAIL B
Typical Tower Ground
(Upstream Tower Legs Only)
No Scale

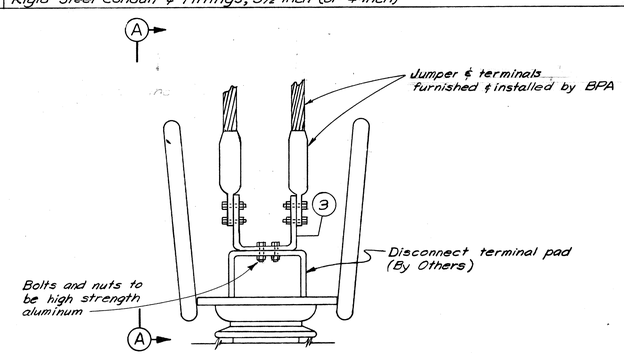

DETAIL C
BPA JUMPER TERMINAL CONNECTION
No Scale

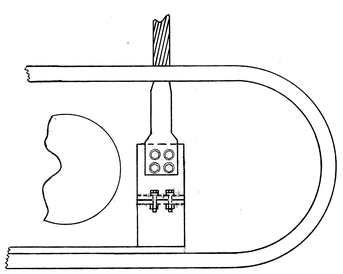

SECTION A-A
No Scale

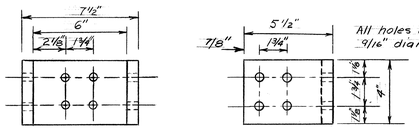

Plan View Side View

Terminal connector plate - Make from ¾" aluminum, alloy No. 2EC-T62. 1 required per switchbase.

DETAIL D
TERMINAL ADAPTER ITEM 3
No Scale

GRAPHIC SCALE
3/16"=1'-0" 4' 0' 4' 8' 12'

REFERENCE DRAWINGS

DWG NO.	SHEET NO.
LGP-1.1-6-1A5/7	80

AS CONSTRUCTED
HYDRO ELECTRIC DESIGN BRANCH, NPD
DATE 1971 SEP 7 BY J R Blair
108 93 Incl as Reqd 49

REVISION	DATE	DESCRIPTION	BY
A	20 Sep 68	Changed cable termination & bus connectors	JRK

Filmed

U. S. ARMY ENGINEER DIVISION. N. P.
PORTLAND, OREGON

DESIGNED BY EMS
DRAWN BY ILF
CHECKED BY WDK
PREPARED: HEAD, ELECTRICAL SECTION

LITTLE GOOSE LOCK AND DAM
SNAKE RIVER, OREGON, WASHINGTON & IDAHO
POWERHOUSE
HIGH VOLTAGE EQUIPMENT PLAN

SUBMITTED: CHIEF, HYDRO-ELECTRIC DESIGN BRANCH

APPROVED: FOR DIV. ENGINEER DATE 25 Jan 68
CHIEF, ENGINEERING DIVISION

SCALE AS SHOWN SPEC. NO.

INV. NO. DACW68-68-B-0029

LGP-1.1-6-1A5/6
SHEET 79

ok

68-C-80

VOL. NO. II

Filmed

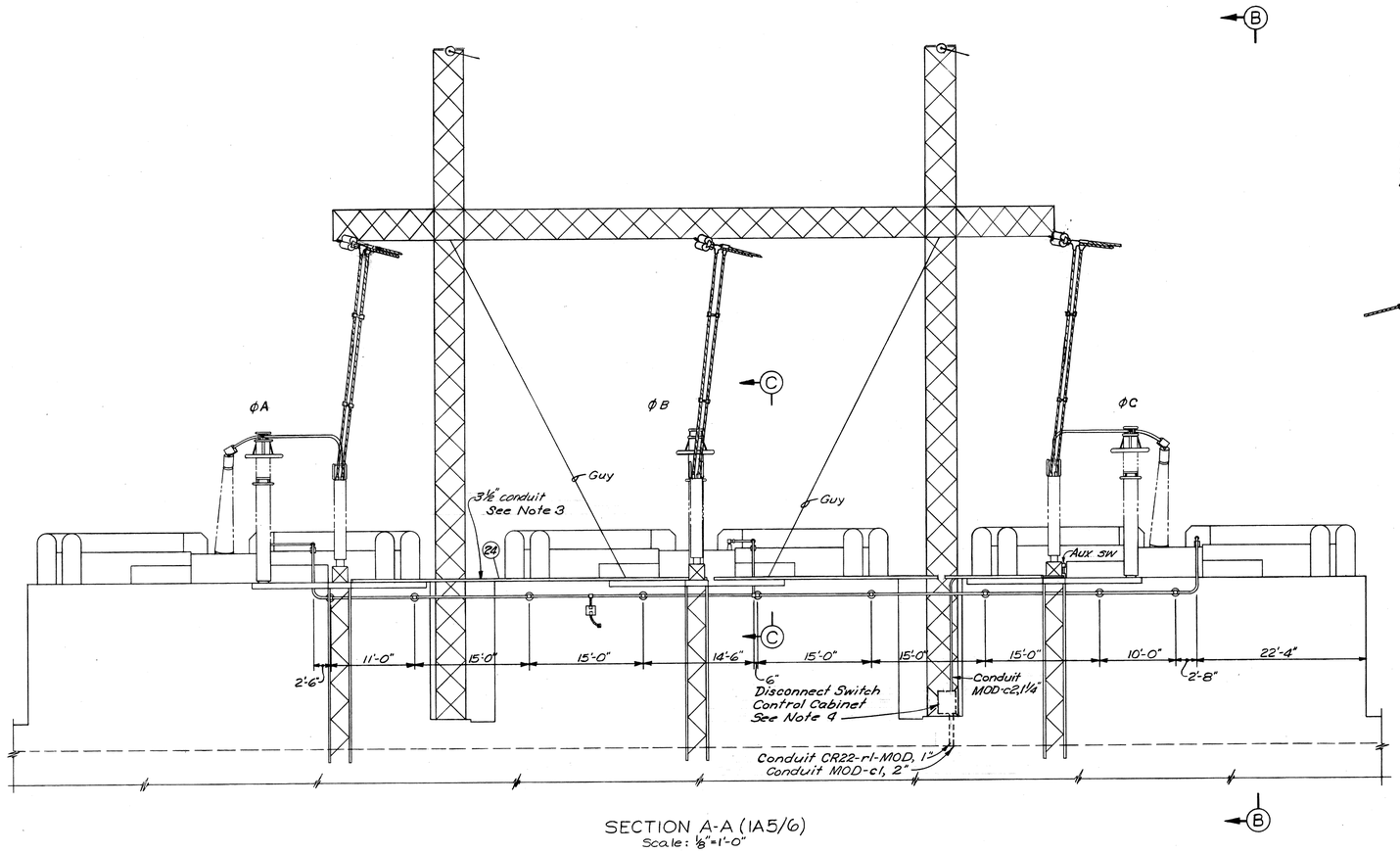

SECTION A-A (1A5/6)
Scale: ⅛"=1'-0"

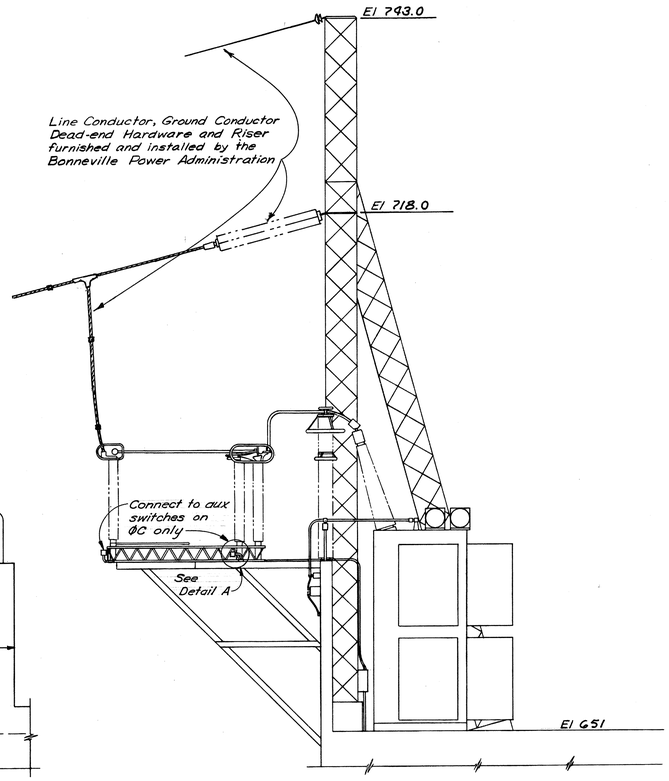

SECTION B-B

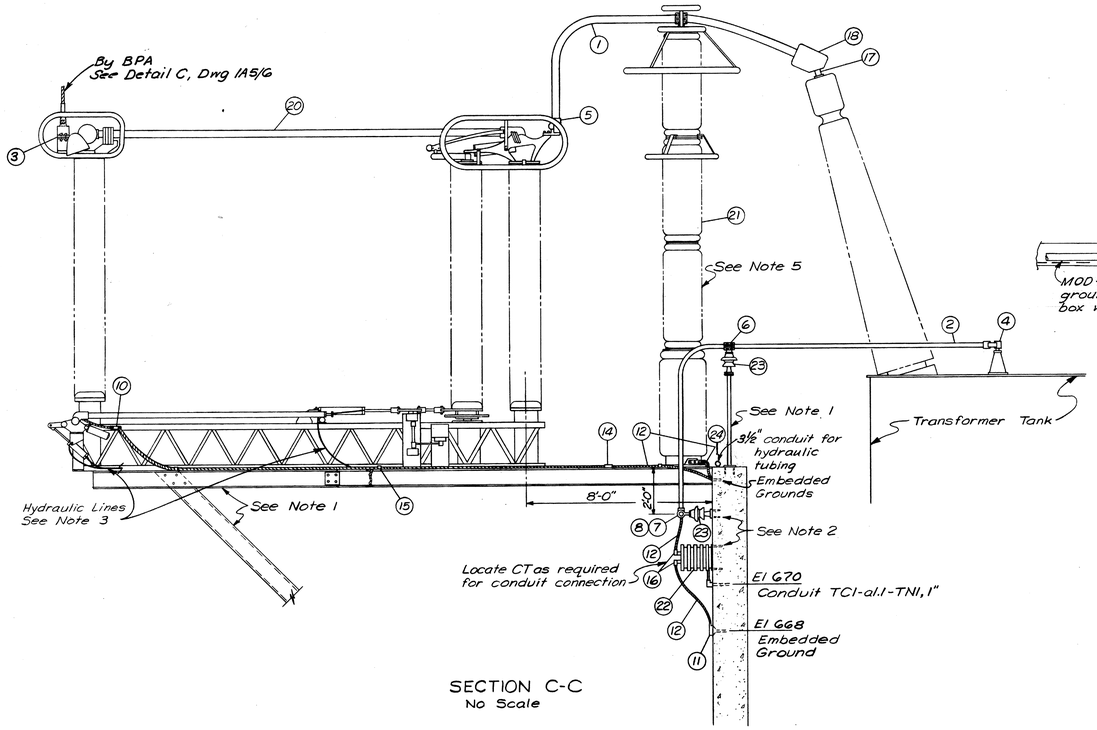

SECTION C-C
No Scale

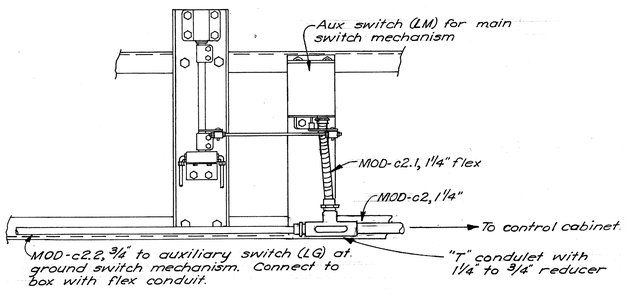

DETAIL A
No Scale

NOTES

1. Details of structural steel supports for disconnect switches, lightning arresters and insulators are shown on structural Dwg LGP-1.1-5-1/7
2. Concrete anchors shall be used for installing insulators, insulator pedestals and the current transformer.
3. Hydraulic tubing to be routed in conduit as shown here and in accordance with manufacturers shop dwgs and instructions.
4. Install control cabinet on upstream face of tower leg to match existing embedded conduit. Locate bottom of cabinet 5 ft. above deck. Fabricate steel supports as required for mounting to tower steel.
5. Center phase arrester to be mounted on disconnect switch support; outside phases to be mounted on wall. Arrange arrester assembly and mounting so that the line terminals are in the angle positions shown in plan view (Dwg 1A5/6) and so that the pressure relief aperture is directed to the downstream side.

REFERENCE DRAWINGS

DRAWING NO.	SHEET NO.
LGP-1.1-6-1A5/6	79
LGP-1.1-5-1/7	122, VOL I

108 43 Incl as Req'd 49

AS CONSTRUCTED
HYDRO ELECTRIC DESIGN BRANCH, NPD
DATE 1971 SEP 7 BY J. R. Kline

GRAPHIC SCALE
½"=1'-0" 4' 0 4' 8' 12' 16' 20'

REVISION	DATE	DESCRIPTION	BY
A	20 Sep 68	Relocated Hydraulic tubing conduit	JRK

U. S. ARMY ENGINEER DIVISION. N. P.
PORTLAND, OREGON

DESIGNED BY EMS
DRAWN BY ILF
CHECKED BY WDK
PREPARED: HEAD, ELECTRICAL SECTION

LITTLE GOOSE LOCK AND DAM
SNAKE RIVER, OREGON, WASHINGTON & IDAHO
POWERHOUSE
HIGH VOLTAGE EQUIPMENT SECTIONS

SUBMITTED: CHIEF, HYDRO-ELECTRIC DESIGN BRANCH

APPROVED: FOR DIV. ENGINEER DATE 25 Jan 68
CHIEF, ENGINEERING DIVISION

SCALE AS SHOWN SPEC. NO.

DIV. NO. DACW68-68-B-0029

LGP-1.1-6-1A5/7

SHEET 80

68-C-80

VOL. NO. II

CORPS OF ENGINEERS

U. S. ARMY

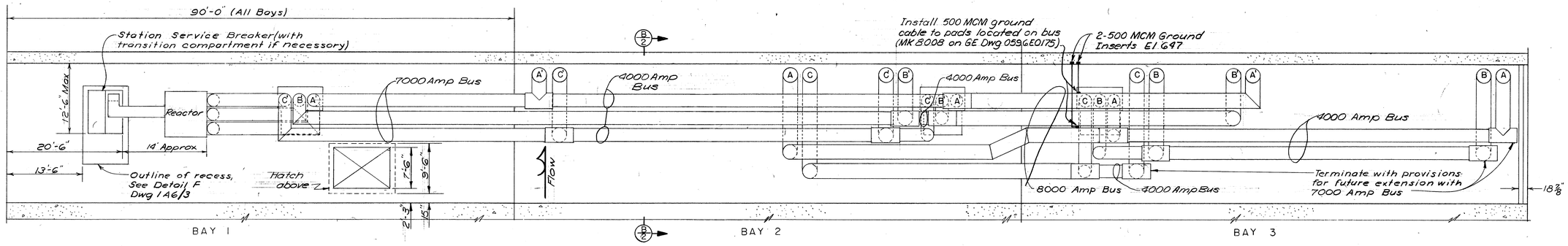

NOTES

1. See Dwg LGP-1-G-1AG/2 for notes.

2. This drawing, including Note 1, was issued as LGP-1-G-1AG/1 for procurement of Government-furnished equipment. Design is subject to modification in accordance with Note 1, Dwg LGP-1.1-G-1AG/2. General Electric Company is the contractor.

3. Ground connections shown are incidental to the installation of the 15KV bus and switchgear.

REFERENCE DRAWINGS

DRAWING NO.	SHEET NO.
LGP-1.1-G-1AG/2	42
LGP-1.1-G-1AG/3	43
LGP-1.1-G-1AG/4	44
G.E. 0596E0175	CONTRACT NO. 65-357
G.E. 0596E0180	CONTRACT NO. 65-357

DELTA BUS PLAN
SECTION A - A

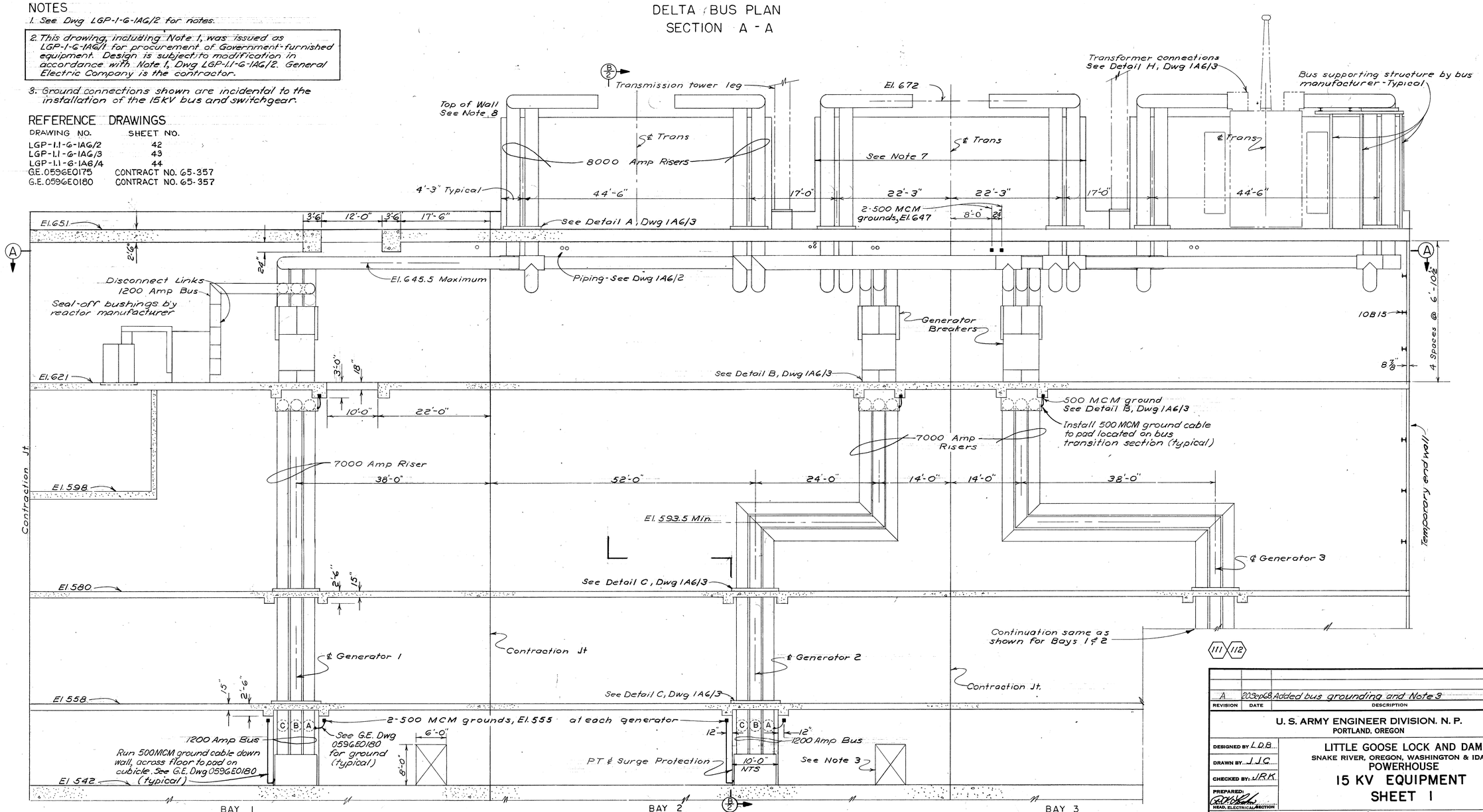

ELEVATION (LOOKING DOWNSTREAM)

AS CONSTRUCTED
HYDRO ELECTRIC DESIGN BRANCH, NPD
DATE 1971 SEP 7 BY J. W. Klein

GRAPHIC SCALE
1/8" = 1'-0"

REVISION	DATE	DESCRIPTION	BY
A	20Sep68	Added bus grounding and Note 3	JRK

U. S. ARMY ENGINEER DIVISION, N. P.
PORTLAND, OREGON

DESIGNED BY L.D.B.
DRAWN BY J.J.C.
CHECKED BY J.R.K.
PREPARED: CHIEF, ENGINEERING SECTION

LITTLE GOOSE LOCK AND DAM
SNAKE RIVER, OREGON, WASHINGTON & IDAHO
POWERHOUSE
15 KV EQUIPMENT
SHEET 1

APPROVED: FOR DIV. ENGINEER DATE 25 Jan 68
CHIEF, ENGINEERING DIVISION

SUBMITTED: CHIEF, HYDRO-ELECTRIC DESIGN BRANCH

SCALE AS SHOWN SPEC. NO.

INV. NO. DACW68-68-B-0028

LGP-1.1-6-1A6/1

SHEET 41

VOL. NO. II

68-C-80

SCANNED

ARMY - KILHAM STATIONERY & PRINTING CO., PORTLAND, OREGON

CORPS OF ENGINEERS

U. S. ARMY

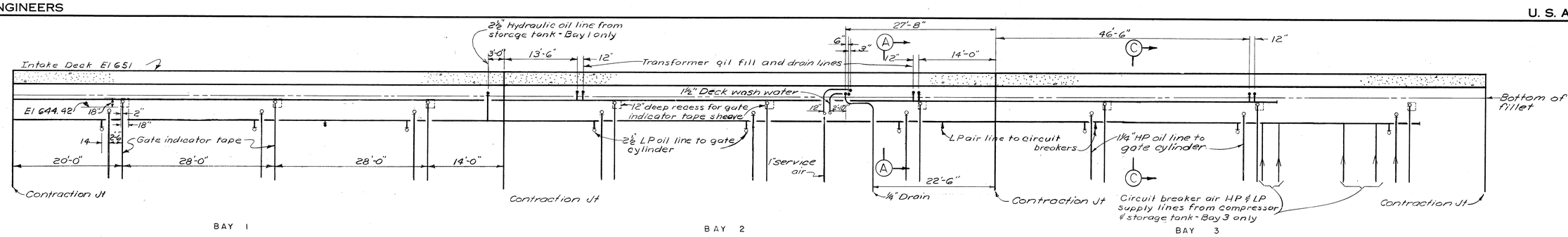

PIPE LOCATION - ELEVATION

(LOOKING DOWNSTREAM)
Scale 1/8" = 1'-0"

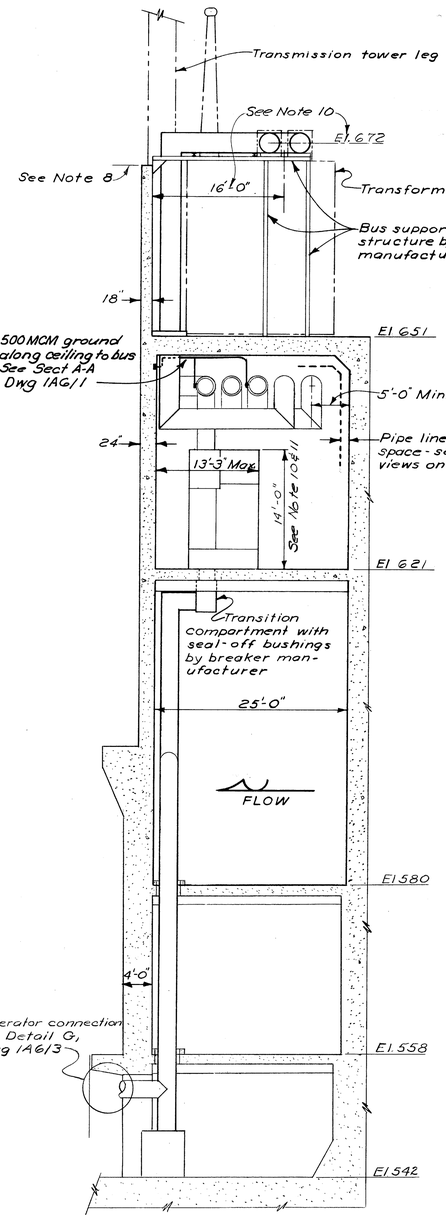

SECTION B - B (1A6/1)
Scale 1/8" = 1'-0"

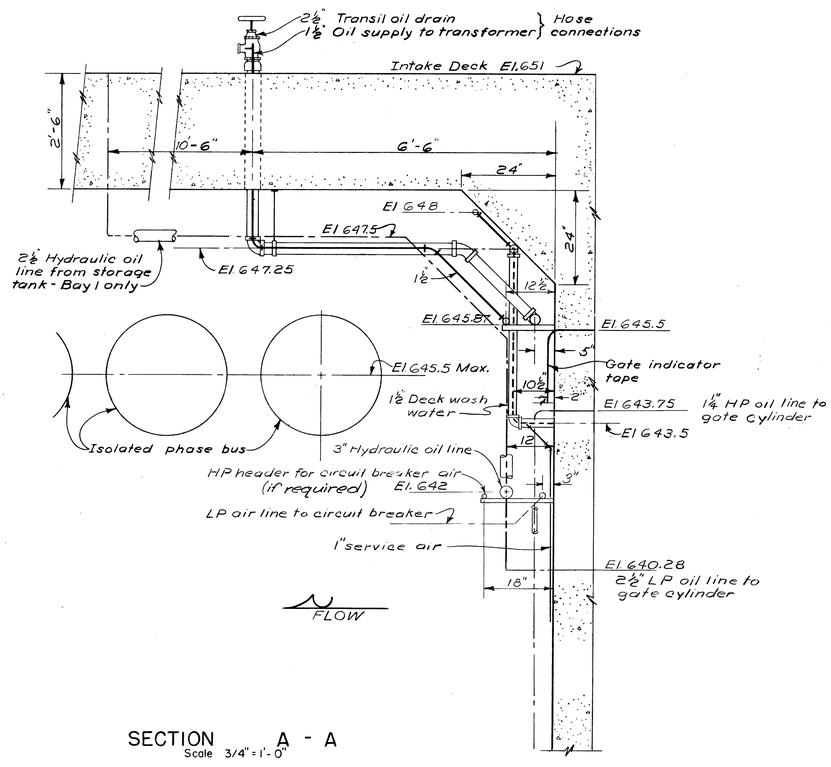

SECTION A - A
Scale 3/4" = 1'-0"

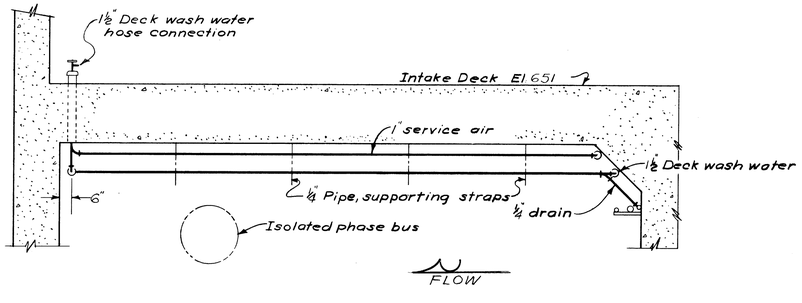

SECTION C - C
Scale 3/8" = 1'-0"

NOTES

1. The space that is available for the 15-kv equipment is restricted by building limitations to the dimensions shown. The arrangement is not to be considered as limiting the design of the equipment but is shown for illustrative purposes.
2. The 15 kv equipment is to be furnished for 3 generating units. The arrangement is shown complete for 3 units with a station service tap at Bay 1 only.
3. Shipping dimensions shall permit installation through building openings shown. Shipping sections for the PT and Surge Protection Cubicle shall pass through the indicated 6 foot wide by 8 foot high opening.
4. The bus shall be arranged to provide access to all connections and breaker transition compartments.
5. All supports required by the isolated phase buses shall be furnished by the bus contractor.
6. Supports for overhead bus in the breaker gallery may be designed for bolting to ceiling or walls. Location of supports shall be coordinated with the indicated piping arrangement.
7. The supporting structure for outdoor bus connections to each transformer shall be confined within the width of the associated transformer wall.
8. The transformer wall height will be set to approximately match the height of the transformer tank.
9. Facilities for connections of cable from the station grounding system shall be provided at locations shown unless otherwise approved.
10. For bid purposes bus dimensions are shown of the transformers, generators and taps of generator circuit breakers. Actual dimensions shall be coordinated between manufacturers. Payment for bus will be adjusted for differences, of one foot or more, between lengths shown and actual lengths furnished at these terminations.
11. Generator breaker height shall not exceed 15'-6".
12. All current ratings shown on the drawings are minimum values.
13. This drawing, including Notes 1 thru 12, was issued as LGP-1-6-1A6/2 for procurement of Government-furnished equipment. Design is subject to modification in accordance with Note 1. General Electric Co. is the contractor.

111

REVISION	DATE	DESCRIPTION	BY
A	20Sep68	Added bus ground	JRK

AS CONSTRUCTED
HYDRO ELECTRIC DESIGN BRANCH, NPD
DATE 1971 SEP 7 BY J. R. Kline

GRAPHIC SCALES
1/8" = 1'-0"
3/8" = 1'-0"
3/4" = 1'-0"

U. S. ARMY ENGINEER DIVISION. N. P.
PORTLAND, OREGON

DESIGNED BY LDB
DRAWN BY JJC
CHECKED BY JRK
PREPARED: HEAD, ELECTRICAL SECTION

LITTLE GOOSE LOCK AND DAM
SNAKE RIVER, OREGON, WASHINGTON & IDAHO
POWERHOUSE
15 KV EQUIPMENT
SHEET 2

SUBMITTED: CHIEF, HYDRO-ELECTRIC DESIGN BRANCH

APPROVED: FOR DIV. ENGINEER DATE 25 Jan 68
CHIEF, ENGINEERING DIVISION

SCALE AS SHOWN SPEC. NO.

I.F.V. NO. DACW68-68-B-0029

LGP-1.1-6-1A6/2
SHEET 4-2

68-C-80

VOL. NO. II

SCANNED

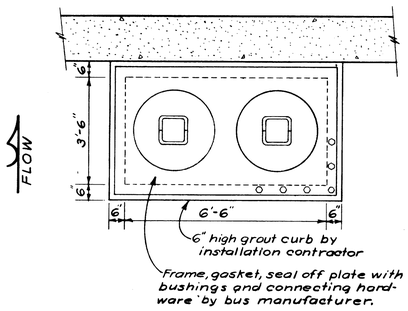

DETAIL A

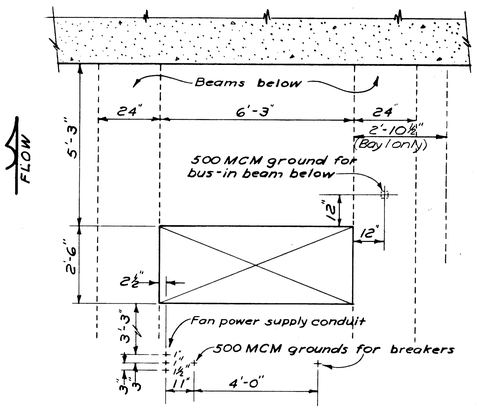

DETAIL B

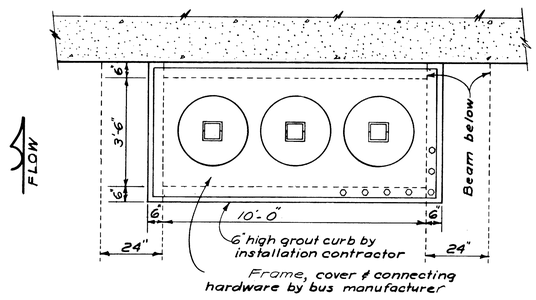

DETAIL C

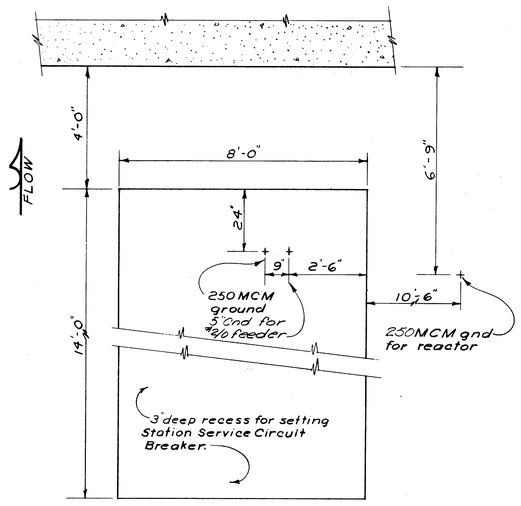

DETAIL F

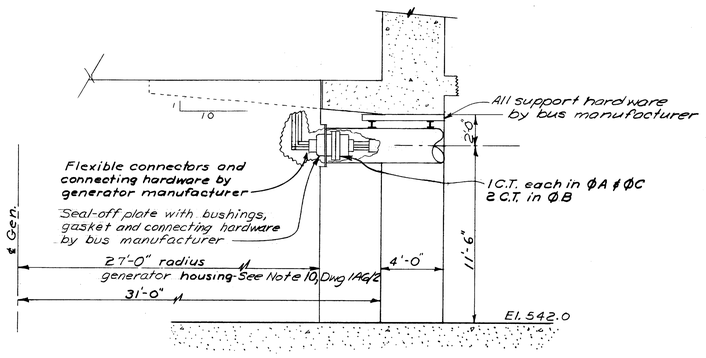

DETAIL G

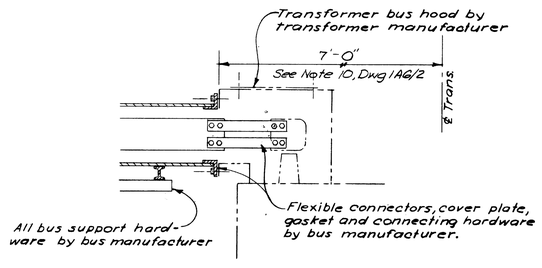

DETAIL H

NO SCALE

REVISION	DATE	DESCRIPTION	BY
1	4Dec66	Revised Details C&G, Removed Details D&E	WHR

U. S. ARMY ENGINEER DIVISION. N. P.
PORTLAND, OREGON

DESIGNED BY LDB
DRAWN BY JJC
CHECKED BY JRK
PREPARED: HEAD, ELECTRICAL SECTION

LITTLE GOOSE LOCK AND DAM
SNAKE RIVER, OREGON, WASHINGTON & IDAHO
POWERHOUSE
15 KV EQUIPMENT
SHEET 3

SUBMITTED: CHIEF, HYDRO-ELECTRIC DESIGN BRANCH

APPROVED: FOR DIV. ENGINEER DATE 2 July 67
CHIEF, ENGINEERING DIVISION

SCALE AS SHOWN SPEC. NO. 65-28

LGP-1 -6-1A6/3
SHEET 3

CONT #65-357

65-C-357

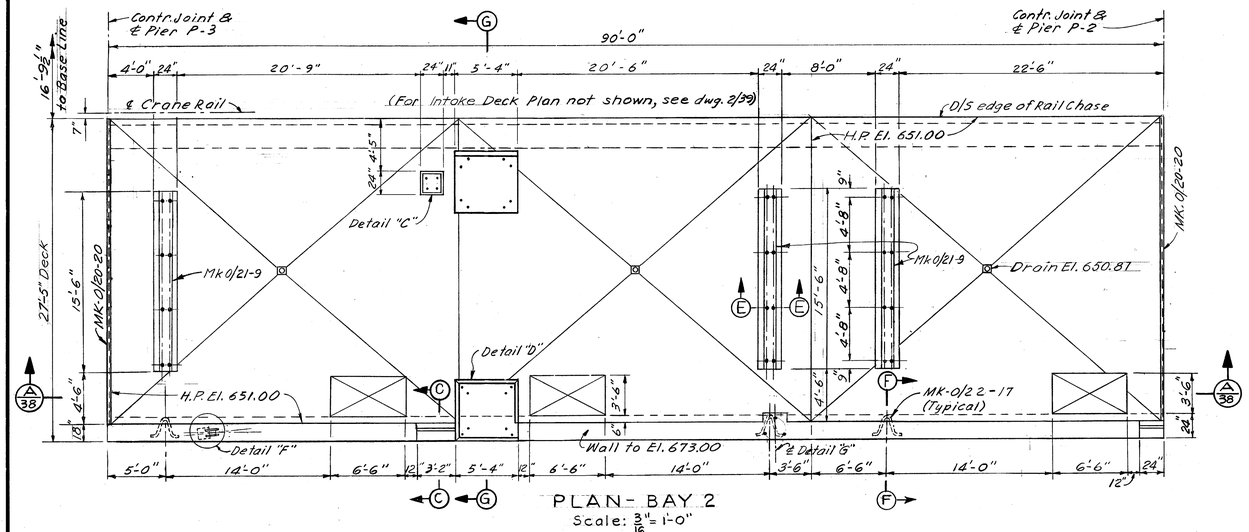

PLAN - BAY 2
Scale: $\frac{3}{16}$" = 1'-0"

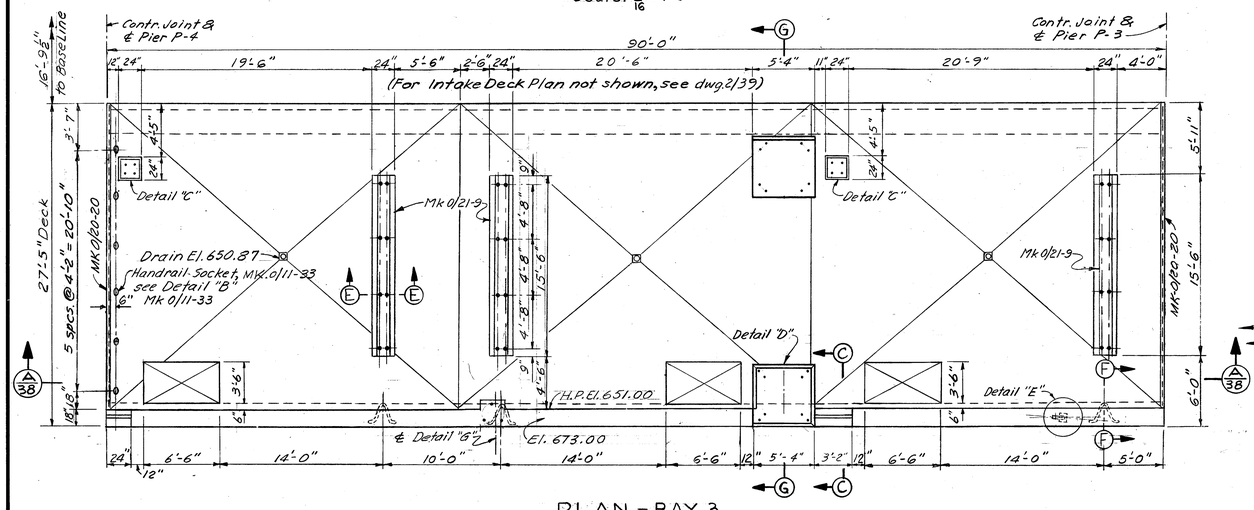

PLAN - BAY 3
Scale: $\frac{3}{16}$" = 1'-0"

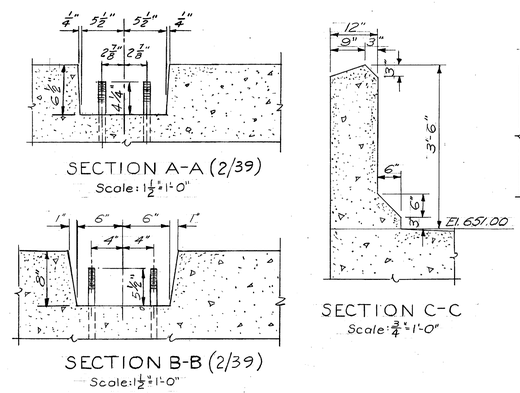

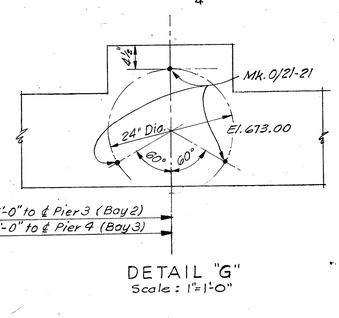

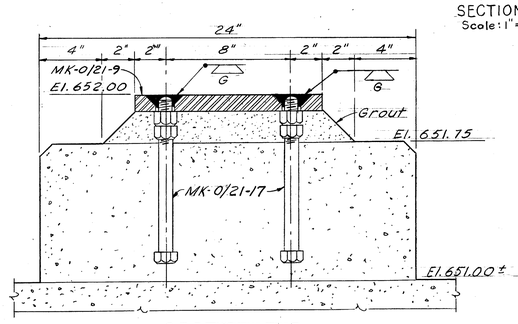

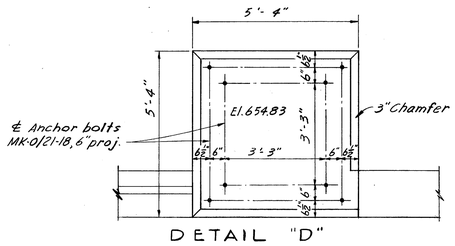

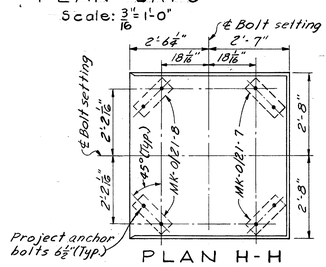

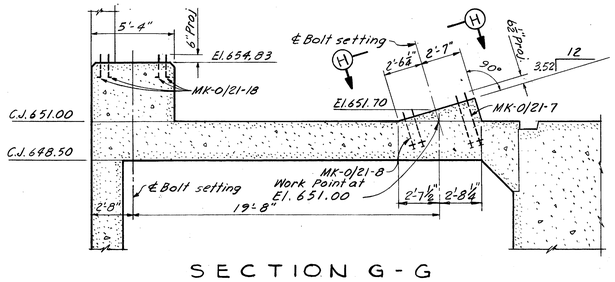

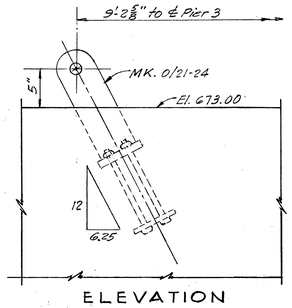

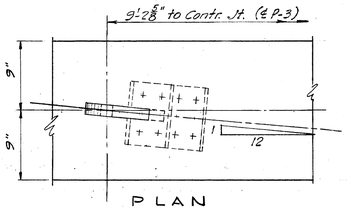

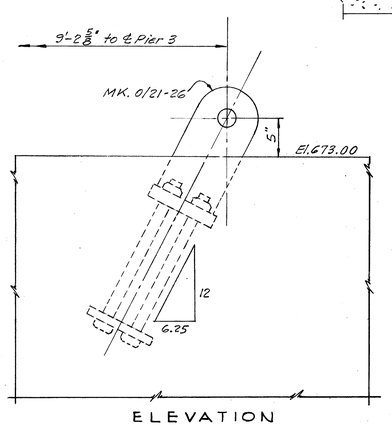

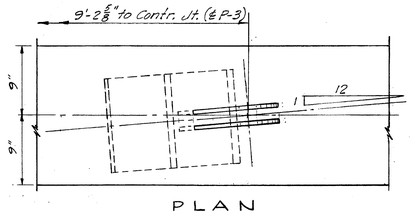

NOTES

For general notes, see dwg. 2/1.
Intake deck to have float finish.
For handrails see dwg. LGP-1-5-0/12.

AS CONSTRUCTED
HYDRO ELECTRIC DESIGN BRANCH, NPD
DATE 1973 MAY 9 BY

REVISION	DATE	DESCRIPTION	BY
D	4.23.73	AS CONSTRUCTED	W.W.D
C	6-6-66	Rev. Detail "G", Minor corrections.	JKO
B	10-8-65	Minor corrections.	JKO
A	2-1-65	Rev. details E, F, Sec. G-G, Plan H-H. Added detail "G".	JKO

U. S. ARMY ENGINEER DIVISION, N. P.
PORTLAND, OREGON

PREPARED BY: U. S. ARMY ENGINEER DISTRICT, SEATTLE
DSGN. BY: Laux | DR. BY: Beaugard/Dianotti | CK. BY:
PREPARED:
CHIEF, CIVIL DESIGN SECTION
ASST. CHIEF, DSGN. BR., CIVIL WKS.
SUBMITTED:
CHIEF, DESIGN BRANCH
RECOMMENDED:
CHIEF, ENGINEERING DIVISION

LITTLE GOOSE LOCK AND DAM
SNAKE RIVER, OREGON WASHINGTON AND IDAHO
POWERHOUSE
GENERATOR BAYS-CONCRETE OUTLINE
INTAKE DECK-EL. 651-SH. 2

SUBMITTED:
CHIEF, HYDROELECTRIC DESIGN BR.
APPROVED FOR DIV. ENGINEER: DATE 4 Dec. 64
CHIEF, ENGINEERING DIVISION
SCALE AS SHOWN | SPEC. NO.
LGP-1-4-2/40
SHEET 67 Vol. V

INV. NO. CIVENG-45-164-65-18 65-C-560

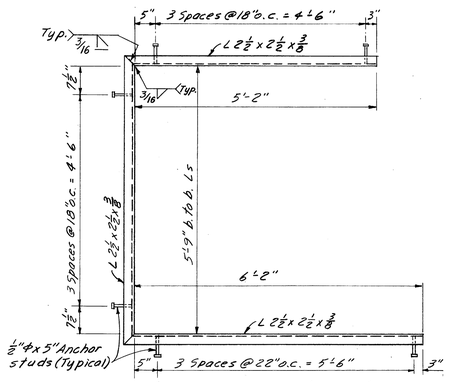

MK-0/21-1 & MK-0/21-2 (OPP. HAND)
Scale: ¾" = 1'-0"
For location see dwg. 2/24

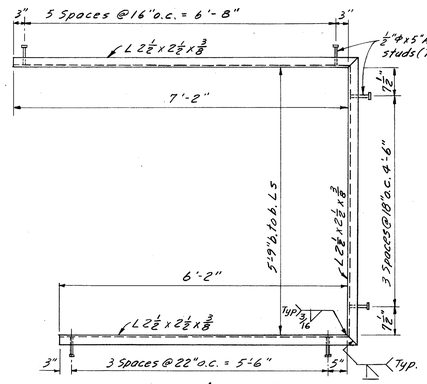

MK-0/21-3
Scale: ¾" = 1'-0"
For location see dwg. 2/24

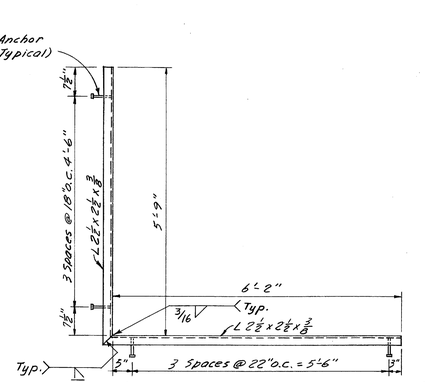

MK-0/21-4 & MK-0/21-5 (OPP. HAND)
Scale: ¾" = 1'-0"
For location see dwg. 2/24

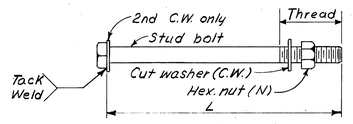

ANCHOR BOLTS
Not to scale

MK. NO.	TYPE	DIA.	L	THD.	N	C.W.	L.W.	DWG. LOC.	PAY ITEM	PAINT SYSTEM
0/21-16	A	⅜"ϕ	7"	Std.	1	1	-	2/20	(73)	No paint
0/21-17	A	1"ϕ	10"	Std.	2	1	-	2/40	do	No paint
0/21-18	B	7/8"ϕ	18"	2½"	1	1	-	2/40	do	Galvanize
0/21-19	A	¾"ϕ	12"	Std.	1	1	-	3/15 & 0/1	(110)	No paint
0/21-20	B	1ϕ	20"	6"	2	2	1	2/24 & 4/1	(73)	No paint
0/21-21	A	1½ϕ	3'-0"	6½"	2	1	-	2/40	(73)	Galvanize
0/21-22	B	1"ϕ	2'-9"	Std.	1	1	1	3/36, 2/39 & 2/40	do	Galvanize
0/21-23	B	¾"ϕ	18"	2½"	1	1	1	2/30, 3/9	do	Galvanize
0/21-27	B	⅝"ϕ	10"	2"	1	1	1	2/35	do	No paint

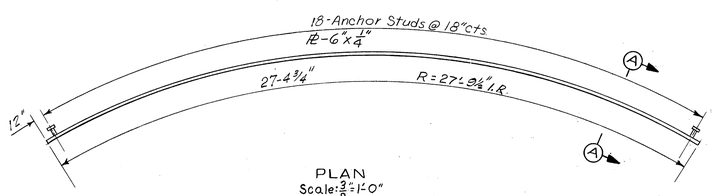

PLAN
Scale: ⅜" = 1'-0"

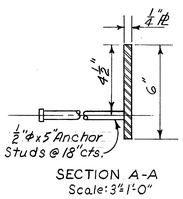

SECTION A-A
Scale: 3"=1'-0"

MK-0/21-6
For location see Dwg. 2/35

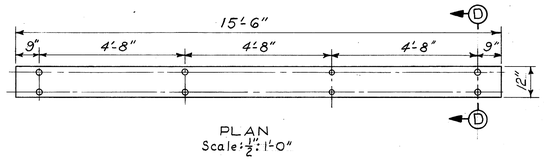

PLAN
Scale: 1"=1'-0"

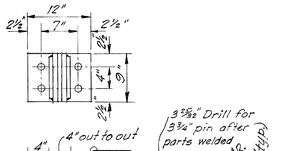

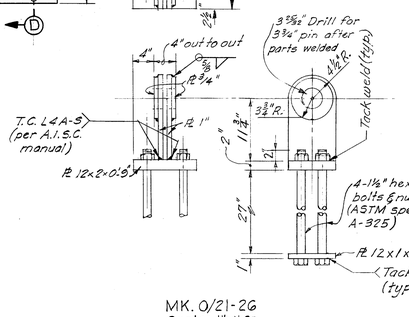

MK-0/21-26
Scale: 1"=1'-0"
For location see Dwg. 2/40

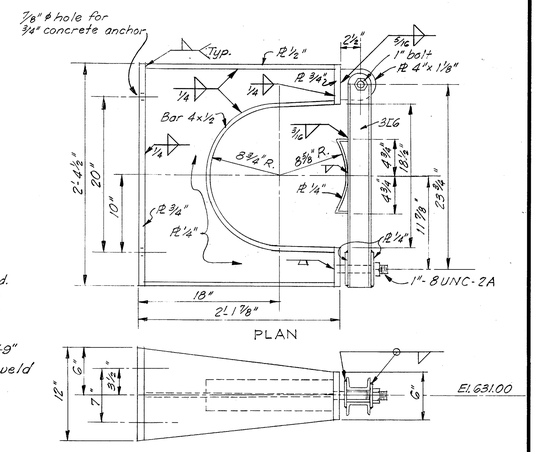

ELEVATION
MK. 0/21-28
Scale: 1½"=1'-0"
Install on wall above ϕ cylinder pedestal shown on Dwg. 3/33

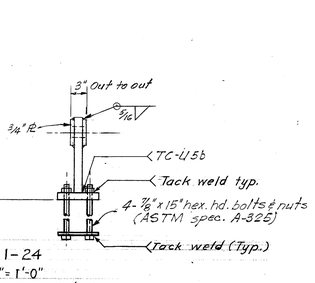

MK-0/21-7 & 8 (73)
Scale: 1½"=1'-0"
For Location see Dwg. 2/40

MK. 0/21-24
Scale: 1"=1'-0"
For location see dwg 2/40

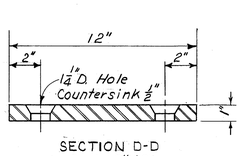

SECTION D-D
Scale: 3"=1'-0"

MK-0/21-9
For location see Dwg. 2/40

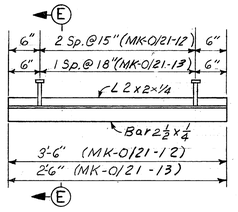

PLAN
Scale: 1"=1'-0"

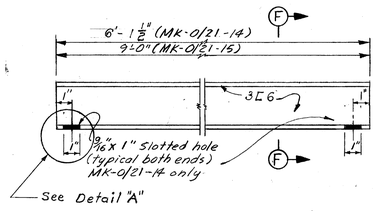

ELEVATION

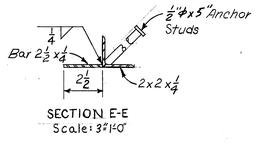

SECTION E-E
Scale: 3"=1'-0"

MK-0/21-12 & MK-0/21-13
For location see dwgs 2/20

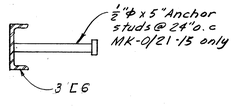

SECTION F-F

MK-0/21-14 & MK-0/21-15
Scale: 3"=1'-0"
For location see dwgs. 2/32, 3/29 & 3/32

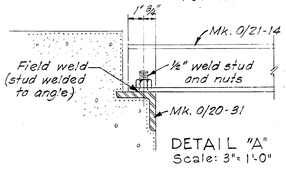

DETAIL "A"
Scale: 3"=1'-0"

AS CONSTRUCTED
HYDRO ELECTRIC DESIGN BRANCH, NPD
DATE 1973 MAY 9 BY

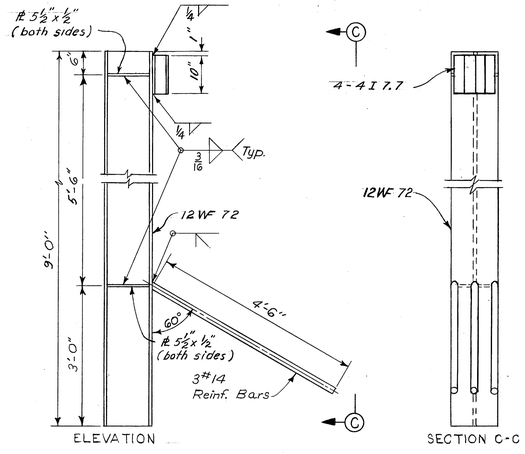

ELEVATION SECTION C-C

MK-0/21-25
Scale: ¾" = 1'-0"
For location see Dwgs. 2/49 & 2/50

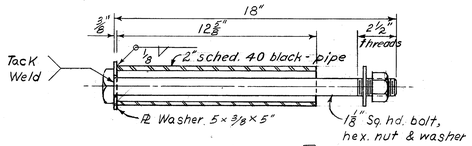

MK-0/21-10 (110)
Scale: 3"=1'-0"
For location see Dwgs. 2/30, 2/31, 3/13, 3/14, 0/12 & 2/49.

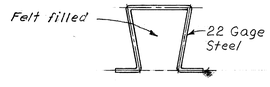

DOVETAIL ANCHOR SLOT
MK-0/21-11
FULL SIZE
(No payment)

REVISION	DATE	DESCRIPTION	BY
I	4.23.73	AS CONSTRUCTED	W.W.D. Pitcock
H	6-30-67	Rev. Mk. 0/21-24 & 26; added Mk. 0/21-28	JKD
G	5-31-67	Rev. Mk. 0/21-24 & Mk. 0/21-26.	JKD
F	6-6-66	Added Mk. 0/21-21 & added Ref. Dwg. 3/9 to Mk 0/21-23.	JKD
E	3-23-66	Deleted Mk. 0/21-28; Added dims. To 0/21-26: Min. corr.	JKD
D	12-8-65	Added Mk. 0/21-28; rev. "Notes"	JKD
C	10-8-65	Rev. Mk. 0/21-12, 13, 14 & 15; Rev. Detail "A".	JKD
B	31 Mar 65	Rev. Mk. 0/21-6, 0/21-10; deleted Mk. 0/21-21; general rev.	OC
A	2-1-65	Rev. Mk. 0/21-24 & 26. Added Mk 0/21-23 & 27	FDT

NOTES
For general notes see dwg. 0/1.
Galvanize all items shown on this drawing, except as noted.

Paint top 5" of Mk. 0/21-10 with paint system No. 8A.
All items shown on this drawing to be paid for under item (74) unless as otherwise noted.

U. S. ARMY ENGINEER DIVISION, N. P.
PORTLAND, OREGON

PREPARED BY: U. S. ARMY ENGINEER DISTRICT, SEATTLE
DSGN. BY: K. D. Mondress
DR. BY: E. I. Ezy
CK. BY: L. L. K.
PREPARED: Stella Smith ASST. CHIEF, DSGN. BR., CIVIL WKS.
SUBMITTED: CHIEF, DESIGN BRANCH
RECOMMENDED: CHIEF, ENGINEERING DIVISION

SUBMITTED: CHIEF, HYDROELECTRIC DESIGN BR.
APPROVED FOR DIV. ENGINEER: DATE 4 Dec 64
CHIEF, ENGINEERING DIVISION
SCALE AS SHOWN
SPEC. NO.

LITTLE GOOSE LOCK AND DAM
SNAKE RIVER, OREGON WASHINGTON AND IDAHO
POWERHOUSE
MISCELLANEOUS METAL
MISCELLANEOUS DETAILS
SHEET 2

LGP-1-5-0/21
SHEET 151 Vol. V

INV. NO. CIVENG-45-164-65-18

65-C-560

SPECIAL FEATURES: NONE

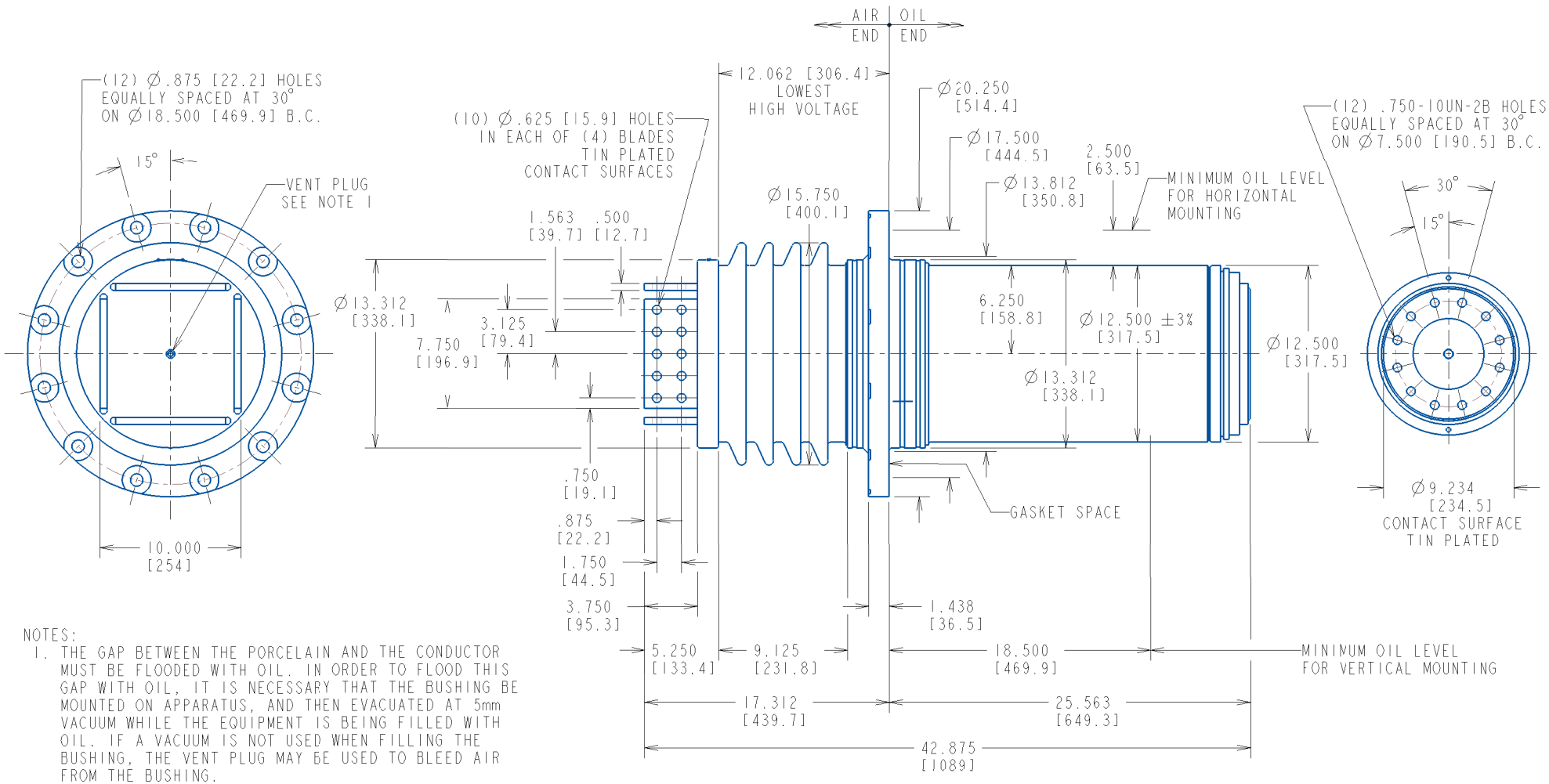

NOTES:
1. THE GAP BETWEEN THE PORCELAIN AND THE CONDUCTOR MUST BE FLOODED WITH OIL. IN ORDER TO FLOOD THIS GAP WITH OIL, IT IS NECESSARY THAT THE BUSHING BE MOUNTED ON APPARATUS, AND THEN EVACUATED AT 5mm VACUUM WHILE THE EQUIPMENT IS BEING FILLED WITH OIL. IF A VACUUM IS NOT USED WHEN FILLING THE BUSHING, THE VENT PLUG MAY BE USED TO BLEED AIR FROM THE BUSHING.
2. USE COPPER ALLOY BOLTS FOR ELECTRICAL CONNECTION.

STYLE NO.	CATALOG NO.	OUTER INSULATING ENVELOPE COLOR	INSULATION CLASS kV	BASIC IMPULSE LEVEL kV	MAX. LINE TO GROUND VOLTAGE kV	CONNECTION METHOD AND CONTINUOUS CURRENT A @ 60Hz			MINIMUM CREEP DISTANCE in. / [mm]	MINIMUM ARCING DISTANCE in. / [mm]	MAXIMUM ALTITUDE ft / [m]	MOUNTING ANGLE FROM VERTICAL deg	APPROX. WEIGHT lb / [kg]
						DRAW-LEAD	INBOARD END						
							TRANS.	O.C.B.					
025B1000DS	N/A	GRAY	25	150	16	N/A	10000	N/A	18.000 [457]	9.125 [232]	10000 [3048]	0 TO 90	450 [204.1]
025D1000DS	N/A	BROWN											

NO. & LOC.	REVISIONS
6	CA55778-1, D-4A0535 REDRAWN ON CADD WITH DIMENSIONAL CORRECTIONS. W.A.SHINER 4-22-02 L.BIBB 5-2-02
7	"FOR OPTIMUM LOW CORONA PERFORMANCE" REMOVED FROM NOTES:1 & LOWEST HIGH VOLTAGE DIMENSION 12.062 [306.4] ADDED PRABHU 06/05/12 W.A.SHINER 8-07-12
A	DRAWING UPDATED. VA LK 07/17/2019. D STACY 07/17/2019

ABB Inc.
ALAMO, TN U.S.A.

TITLE: TYPE RJ™, IEEE, BULK BUSHING

P/E FILE KEY: BULK GEN ASM

RESP. DEPT.: BUSHINGS			
DFTR: W.A.SHINER	22-Apr-02	UNITS = in./[mm]	DRAWING NO: T025B1000DS
CHKD:		SCALE = 0.188	
APPD:		LANG. = ENGLISH	REV.: A SHEET 1 OF 1

WE RESERVE ALL RIGHTS IN THIS DOCUMENT AND IN THE INFORMATION CONTAINED THEREIN. REPRODUCTION, USE OR DISCLOSURE TO THIRD PARTIES WITHOUT EXPRESS AUTHORITY IS STRICTLY FORBIDDEN. © ABB.

PRINTED DATE: March 22, 2024

SPECIAL FEATURES: NONE

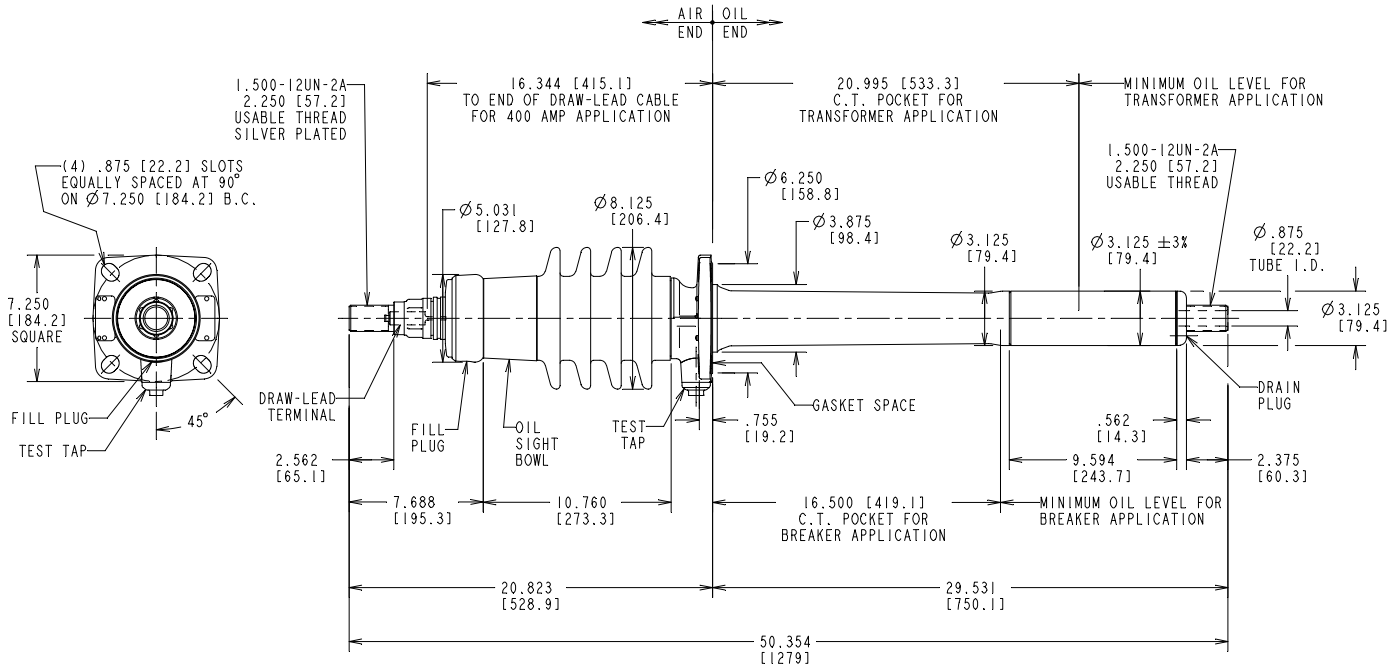

STYLE NO.	CATALOG NO.	OUTER INSULATING ENVELOPE COLOR	INSULATION CLASS kV	BASIC IMPULSE LEVEL kV	MAX. LINE TO GROUND VOLTAGE kV	CONNECTION METHOD AND CONTINUOUS CURRENT A@60Hz			MINIMUM CREEP DISTANCE in. / [mm]	MINIMUM ARCING DISTANCE in. / [mm]	MAXIMUM ALTITUDE ft / [m]	MOUNTING ANGLE FROM VERTICAL deg	APPROX. WEIGHT lb / [kg]
						DRAW-LEAD	INBOARD END						
							TRANS.	O.C.B.					
025W0412AT	W7B522BB	GRAY	25	150	16	400	1200	1200	20.625 [524]	10.750 [273]	10000 [3048]	0 TO 60	58 [26.3]
025X0412AT	W7B522	BROWN											

NO. & LOC.	REVISIONS	
1	D-4A0543 REDRAWN ON CADD WITH DIMENSIONAL CORRECTIONS & REPLACES PART OF DWG 4B837 W.A.SHINER 10-26-98 L. ELDER 2/15/99	
2	ACTIVE NAMEPLATES RELOCATED; W.A.SHINER 3-02-99	
3	D-4A0543 MIN CREEP VALUE SHOWED NOMINAL 21.6 W.A.SHINER 11-16-99 D. HERLIHY 11/16/99	
4	D-4A0543 MIN CREEP METRIC VALUE CORRECTED; W.A.SHINER 11-17-99 D. HERLIHY 11/17/99	
5	-ACTIVE- DIMENSION FOR DRAW-LEAD CABLE CHANGED FROM 16.406. W.A.SHINER 3-02-01 H. McKIM 3/2/01	
6	D-4A0506 OIL SIGHT BOWL WAS OIL SIGHT GLASS J.ARMIGER 10/28/02 JAA 09/08/03	

PRINTS TO:

1		7		13	
2		8	1A	14	
3		9		15	
4		10	2P	16	
5	1A	11		17	
6		12		18	
REF:					

ABB Inc.
ALAMO, TN U.S.A.

TITLE: TYPE O Plus C™, IEEE, CONDENSER BUSHING

P/E FILE KEY: LINE I GEN ASM

RESP. DEPT.: BUSHINGS			
DFTR: W.A.SHINER	26-Oct-98	UNITS = in./[mm]	DRAWING NO: T025W0412AT
CHKD:		SCALE = 0.250	
APPD: D.M.GEIBEL	3/3/99	LANG. = ENGLISH	REV.: 6
			SHEET 1 OF 1

WE RESERVE ALL RIGHTS IN THIS DOCUMENT AND IN THE INFORMATION CONTAINED THEREIN. REPRODUCTION, USE OR DISCLOSURE TO THIRD PARTIES WITHOUT EXPRESS AUTHORITY IS STRICTLY FORBIDDEN. © ABB.

SPECIAL FEATURES: NONE

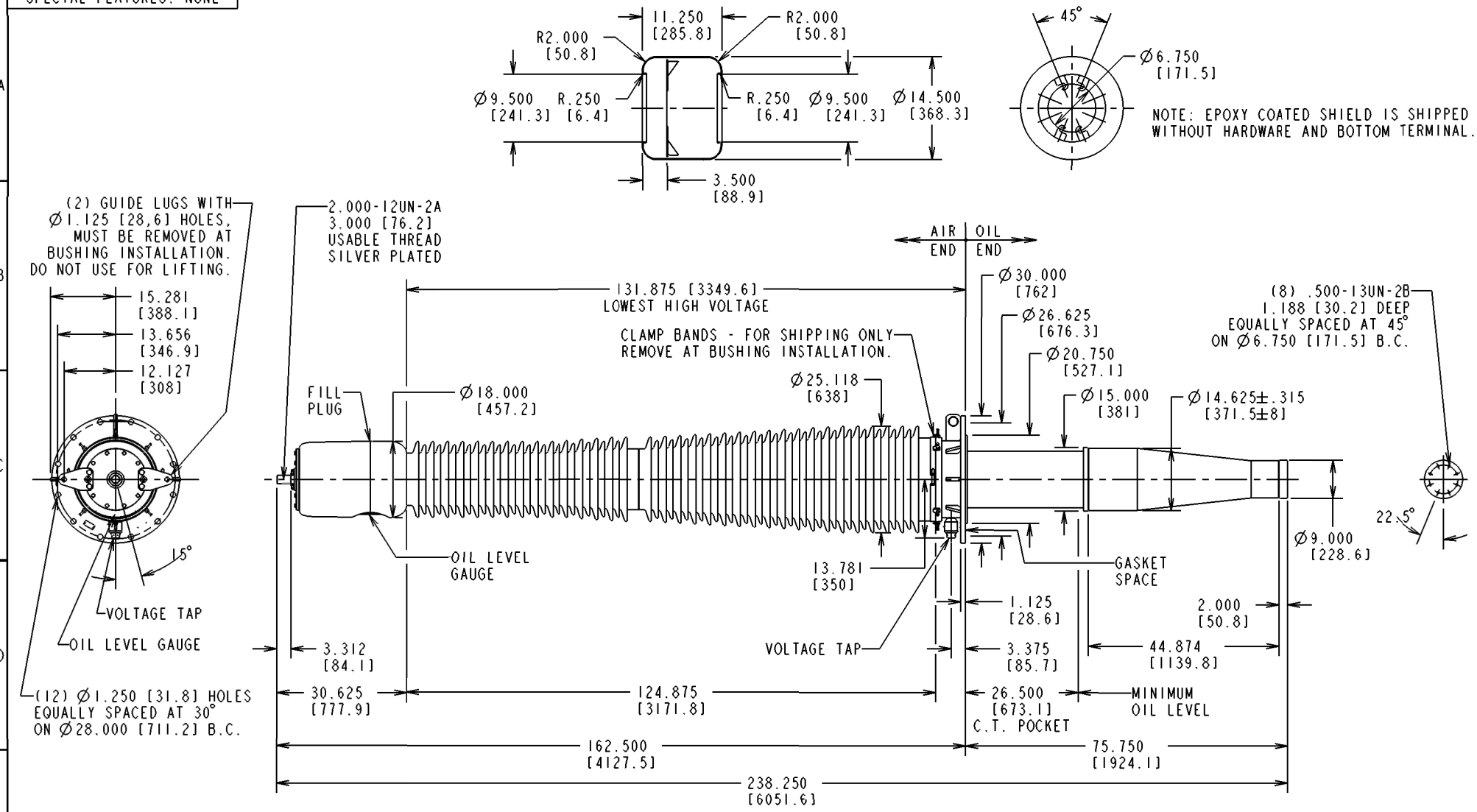

STYLE NO.	CATALOG NO.	OUTER INSULATING ENVELOPE COLOR	INSULATION CLASS kV	BASIC IMPULSE LEVEL kV	MAX. LINE TO GROUND VOLTAGE kV	CONNECTION METHOD AND CONTINUOUS CURRENT A @60Hz			MINIMUM CREEP DISTANCE in. / [mm]	MINIMUM ARCING DISTANCE in. / [mm]	MAXIMUM ALTITUDE ft / [m]	MOUNTING ANGLE FROM VERTICAL deg	APPROX. WEIGHT lb / [kg]
						DRAW-LEAD	INBOARD END						
							TRANS.	O.C.B.					
550W2000VV	N/A	GRAY	550	1550	318	N/A	2000	N/A	399.000 [10135]	124.875 [3172]	3300 [1006]	20	2912 [1320.9]
550X2000VV	N/A	BROWN											

REVISIONS

NO. & LOC.	
1	CSR 1210079 - NEW STYLE TO REPLACE WESTINGHOUSE 2640500

ABB Inc.
ALAMO, TN U.S.A.

TITLE:
TYPE O Plus C, IEEE, CONDENSER BUSHING

P/E FILE KEY: LINE2_3/GEN_ASSY

RESP. DEPT.: BUSHINGS		REF. =	
DFTR: H. DINH	08/10/12	UNITS = in./[mm]	DRAWING NO: T550W2000VV
CHKD: P. SWAN	08/17/12	SCALE = 0.060	
APPD: H. DINH	08/17/12	LANG. = ENGLISH	REV.: 1

SHEET 1 OF 1

WE RESERVE ALL RIGHTS IN THIS DOCUMENT AND IN THE INFORMATION CONTAINED THEREIN. REPRODUCTION, USE OR DISCLOSURE TO THIRD PARTIES WITHOUT EXPRESS AUTHORITY IS STRICTLY FORBIDDEN. © ABB.

PRINTED DATE: March 22, 2024