PLANT SCHEDULE FOR MAGAZINES (LP101 - LP103)

| | | SCIENTIFIC NAME | COMMON NAME | QTY | TYPE | NOTES |
|---|---|---|---|---|---|---|
| SOD | | CYNODON DACTYLON 'TIFTUF' | TIFTUF BERMUDA GRASS | 47,000 SQ FT* | SOD | |
| SEED | | | PERMANENT TURF SEED MIX | 542,000 SQ FT* | HIGH PERFORMANCE HYDROSEED | SEE B3 SHEET L-001 |
| | | | OPEN SPACE PERENNIAL SEED MIX | 118,500 SQ FT* | HIGH PERFORMANCE HYDROSEED | SEE D3 SHEET L-001 |

PLANT SCHEDULE SEGREGATION SITES (LP104 - LP105)

| | | SCIENTIFIC NAME | COMMON NAME | QTY | TYPE | NOTES |
|---|---|---|---|---|---|---|
| SOD | | CYNODON DACTYLON 'TIFTUF' | TIFTUF BERMUDA GRASS | 48,000 SQFT* | SOD | |
| SEED | | | PERMANENT TURF SEED MIX | 211,000 SQFT* | HIGH PERFORMANCE HYDROSEED | SEE B3 SHEET L-001 |
| | | | OPEN SPACE PERENNIAL SEED MIX | 94,000 SQFT* | HIGH PERFORMANCE HYDROSEED | SEE D3 SHEET L-001 |

PLANT SCHEDULE DEMOLITION SITES (LP106 - LP110)

| | | | COMMON NAME | QTY | TYPE | NOTES |
|---|---|---|---|---|---|---|
| SEED | | | OPEN SPACE PERENNIAL SEED MIX | 341,500 SQFT* | HIGH PERFORMANCE HYDROSEED | SEE D3 SHEET L-001 |

PLANT SCHEDULE ELECTRICAL DUCT BANK (LP111 - LP114)

| | | | COMMON NAME | QTY | TYPE | NOTES |
|---|---|---|---|---|---|---|
| SEED | | | PERMANENT TURF HYDROSEED | 73,000 SQFT* | HIGH PERFORMANCE HYDROSEED | SEE A1 SHEET L-001, SHEETS LP111-LP112 |
| SEED | | BID OPTION | PERMANENT TURF HYDROSEED | 18,000 SQFT* | HIGH PERFORMANCE HYDROSEED | SEE A1 SHEET L-001, SHEETS LP113-LP114 |

PLANT SCHEDULE REFORESTATION

| ZONE | KEY | SCIENTIFIC NAME | COMMON NAME | QTY | ROOT COLLAR | HEIGHT | MIN. AGE | TYPE | NOTES |
|---|---|---|---|---|---|---|---|---|---|
| 1 | JV | JUNIPERUS VIRGINIANA | EASTERN RED CEDAR | 437 | 1/4" MIN. DIAMETER | 10-16" | 3 YRS | SEEDLING | PLANT IN A TRIANGULAR GRID @ 15' O.C. TO ALLOW FOR MOWING BETWEEN ROWS. PLANT EACH ZONE IN QUANTIES SHOWN ON DRAWING IN A RANDOMIZED ASSORTMENT. PLANT IN TREE TUBES SEE DETAIL A2 / LP501 |
| | PT | PINUS TAEDA | LOBLOLLY PINE | 435 | 1/4" MIN. DIAMETER | 18-24" | 2 YRS | SEEDLING | |
| 2 | LT | LIRIODEDRON TULIPIFERA | TULIP POPLAR | 110 | 1/4" MIN. DIAMETER | 18-24" | 1 YR | SEEDLING | |
| | NS | NYSSA SYLVATICA | BLACK GUM | 106 | 3/8" MIN. DIAMETER | 18-24" | 2 YRS | SEEDLING | |
| | PO | PLATANUS OCCIDENTALIS | SYCAMORE | 104 | 3/8" MIN. DIAMETER | 18-24" | 1 YRS | SEEDLING | |
| 3 | FG | FAGUS GRANDIFOLIA | AMERICAN BEECH | 85 | 1/4" MIN. DIAMETER | 12-24" | 2 YRS | SEEDLING | |
| | QA | QUERCUS ALBA | WHITE OAK | 85 | 3/8" MIN. DIAMETER | 18-24" | 2 YRS | SEEDLING | |

* QUANTITIES ARE FOR CONTRACTOR CONVENIENCE ONLY. TO BE VERIFIED.

## C1 PLANTING SCHEDULE

| PERCENT OF MIX BY WEIGHT | SCIENTIFIC NAME | COMMON NAME | APPLICATION RATE |
|---|---|---|---|
| 52.6% | SCHIZACHYRIUM SCOPARIUM | LITTLE BLUESTEM | 20 (LBS/ACRE) |
| 25% | ELYMUS VIRGINICUS | VIRGINIA WILDRYE | |
| 10% | ECHINACEA PURPUREA | PURPLE CONEFLOWER | |
| 5% | RUDBECKIA HIRTA | BLACKEYED SUSAN | |
| 0.3% | ASCLEPIAS TUBEROSA | BUTTERFLY MILKWEED | |
| 6.5% | PANICUM VIRGATUM | SWITCH GRASS | |
| 0.6% | RUDBECKIA SUBTOMENTOSA | SWEET BLACKEYED SUSAN | |
| | | COVER CROP PER NOTE 3 | 30 (LBS/ACRE) |

NOTES:

1. SEED WEIGHT MUST BE ENTIRELY PURE LIVE SEED (PLS).
2. THE MIX MUST NOT CONTAIN ANY NOXIOUS WEEDS.
3. CONTRACTOR MUST SEED THE MIX AT 20 LBS/ACRE WITH 30 LBS/ACRE OF A COVER CROP. USE GRAIN OATS FROM 1 JANUARY TO 31 JULY AND GRAIN RYE FROM 1 AUGUST TO 31 DECEMBER.

## B1 OPEN SPACE PERENNIAL SEED MIX

SEEDING DATES: MAY 1 - OCTOBER 31

| SCIENTIFIC NAME | COMMON NAME | APPLICATION RATE |
|---|---|---|
| CYNODON DACTYLON W/O HULL | HULLED BERMUDA GRASS (COATED) | 150 LBS/ACRE |
| FESTUCA OVINA | HARD FESCUE | 20 LBS/ACRE |
| TRIFOLIUM REPENS L | WHITE DUTCH CLOVER (COATED AND INNOCULATED) | 10 LBS/ACRE |

SEEDING DATES NOVEMBER 1 - APRIL 30

| SCIENTIFIC NAME | COMMON NAME | APPLICATION RATE |
|---|---|---|
| CYNODON DACTYLON W/ HULL | UNHULLED BERMUDA GRASS (COATED) | 300 (LBS/ACRE) |
| FESTUCA OVINA | HARD FESCUE | 20 LBS/ACRE |
| TRIFOLIUM REPENS L | WHITE DUTCH CLOVER (COATED AND INNOCULATED) | 10 LBS/ACRE |

NOTES:

1. SEED WEIGHT MUST BE ENTIRELY PURE LIVE SEED (PLS).
2. THE MIX MUST NOT CONTAIN ANY NOXIOUS WEEDS.

## A1 PERMANENT TURF HYDROSEED

## GENERAL NOTES:

A. LOCATION AND ELEVATION OF ALL EXISTING IMPROVEMENTS WITH AND ADJACENT TO THE AREA OF WORK MUST BE CONFIRMED BY FIELD MEASUREMENT PRIOR TO EXCAVATION AND CONSTRUCTION. EXTREME CARE MUST BE EXERCISED IN EXCAVATION AND WORKING NEAR EXISTING STRUCTURES AND UTILITIES. REFER TO CIVIL DRAWING. THE LOCATIONS OF UTILITIES, STRUCTURES AND SERVICES SHOWN IN THESE PLANS ARE APPROXIMATE ONLY, ANY DISCREPANCIES BETWEEN THESE PLANS AND ACTUAL FIELD CONDITIONS MUST BE IMMEDIATELY REPORTED TO THE CONTRACTING OFFICER REPRESENTATIVE.

B. NOTIFY THE CONTRACTING OFFICER'S REPRESENTATIVE A MINIMUM OF 5 BUSINESS DAYS PRIOR TO COMMENCEMENT OF WORK TO COORDINATE PROJECT INSPECTION SCHEDULES.

C. NOTIFY THE CONTRACTING OFFICER'S REPRESENTATIVE AND THE GOVERNMENT LANDSCAPE ARCHITECT 10 WORKING DAYS PRIOR TO DELIVERY OF PLANT MATERIALS TO ALLOW FOR REVIEW PRIOR TO DIGGING PLANTING PITS. REFER TO SUBMITTAL REQUIREMENTS.

D. REQUEST THE CONTRACTING OFFICERS REPRESENTATIVE CONTACT THE GOVERNMENT LANDSCAPE ARCHITECT TO INSPECT ALL TREES PRIOR TO OFF-LOADING AND APPROVE FINAL LAYOUT OF PLANT MATERIAL IN THE FIELD.

E. ALL MATERIALS MUST BE OF STANDARD, APPROVED AND FIRST GRADE QUALITY AND MUST BE IN PRIME CONDITION WHEN INSTALLED AND ACCEPTED. ANY COMMERCIALLY PROCESSED OR PACKAGED MATERIAL MUST BE DELIVERED TO THE SITE IN THE ORIGINAL UNOPENED PACKAGING BEARING THE MANUFACTURER'S GUARANTEED ANALYSIS.

F. TAKE NECESSARY PRECAUTIONS TO MAINTAIN THE INTEGRITY OF STRUCTURES DURING CONSTRUCTION. THE CONTRACTOR IS RESPONSIBLE FOR THE DESIGN, CONSTRUCTION, AND MAINTENANCE OF ALL SAFETY DEVICES, INCLUDING SHORING AND BRACING.

G. CONTACT THE CONTRACTING OFFICER'S REPRESENTATIVE FOR REVIEW AND APPROVAL PRIOR TO ANY PROPOSED SUBSTITUTIONS.

H. SUBMIT A MINIMUM OF (3) 1-PINT SOIL SAMPLES (2 IN TURF AREAS AND 1 IN PLANTING BEDS) FOR AGRICULTURAL SUITABILITY SOILS TESTING (STANDARD TEST A05-N) AT A QUALIFIED SOILS TESTING LABORATORY. COLLECT SOIL SAMPLES WITHIN PLANTING AREAS, AFTER THE COMPLETION OF GRADING. PROVIDE (1) COPY OF THE SOIL REPORTS AND RECOMMENDATIONS TO THE CONTRACTING OFFICER PRIOR TO CARRYING OUT CORRECTIVE MEASURES PER THE ANALYSIS.

I. REFORESTATION AREAS TO HAVE UNCOMPACTED SOIL WITH A PH OF 5.5-6.5. WOODY STEMS AND INVASIVE PLANTS TO BE REMOVED VIA HERBICIDE OR MECHANICAL CLEARING. MIN COMPOST INCORPORATION OF 18 INCHES.

J. REMOVE ROCK AND DEBRIS LARGER THAN ONE INCH (1") FROM THE SIDES, BOTTOM, AND BACKFILL SOIL OF THE PLANTING PITS. DISPOSE OF ALL DEBRIS OFF SITE.

K. LEAVE THE SITE IN A CLEAN CONDITION REMOVING ALL USED MATERIALS, TRASH, AND TOOLS ON A DAILY BASIS.

L. UPON COMPLETION OF ALL WORK, CONTACT THE CONTRACTING OFFICERS REPRESENTATIVE TO ARRANGE FOR A WALK-THROUGH TO VERIFY ALL ASPECTS OF WORK ARE COMPLETED. WORK MUST BE FULLY COMPLETED ACCORDING TO ALL PLANS AND SPECIFICATIONS AND MUST BE ACCEPTED BY THE CONTRACTING OFFICER IN WRITING PRIOR TO BEGINNING THE ESTABLISHMENT PERIOD.

M. REFORESTATION SEEDLINGS MUST BE MAINTAINED AND GUARANTEED FOR TWO YEARS BEGINNING THE DATE OF THE INSPECTION BY THE CONTRACTING OFFICER TO COMMENCE THE PLANT ESTABLISHMENT PERIOD.

N. PRIOR TO THE END OF THE ESTABLISHMENT PERIOD, CONTACT THE CONTRACTING OFFICERS REPRESENTATIVE TO ARRANGE FOR A FINAL WALK THROUGH. ALL MAINTAINED AREAS MUST BE ACCEPTED IN WRITING PRIOR TO THE END OF THE MAINTENANCE PERIOD.

## LANDSCAPE LEGEND:

- SOD
- PERMANENT TURF HYDROSEED
- OPEN SPACE PERENNIAL SEED MIX
- ZONE 1 REFORESTATION
- ZONE 2 REFORESTATION
- ZONE 3 REFORESTATION
- BIORETENTION TOPSOIL
- 4" TOPSOIL
- 8" TOPSOIL

| SYMBOL | NOTES | DESCRIPTION |
|---|---|---|
| 111 / GC | QUANTITY / KEY | CALL OUT-PLANTING SCHEDULE |

| APPLICATION DATES | SPECIES | APPLICATION RATE |
|---|---|---|
| SEPT.1 - FEB. 15 | 50 / 50 MIX OF ANNUAL RYEGRASS (LOLIUM MULTI-FLORUM) AND CEREAL (WINTER) RYE (SECALE CEREALE) | 70-100 (LBS/ACRE) |
| FEB. 16 - APR. 30 | ANNUAL RYEGRASS (LOLIUM MULTI-FLORUM) | 60-80 (LBS/ACRE) |
| MAY 1 - AUG. 31 | GERMAN MILLET | 50 (LBS./ACRE) |

NOTES:

1. SEED WEIGHT MUST BE ENTIRELY PURE LIVE SEED (PLS).
2. THE MIX MUST NOT CONTAIN ANY NOXIOUS WEEDS.

## A3 TEMPORARY EROSION CONTROL SEED MIX

| MARK | DESCRIPTION | DATE |
|---|---|---|

NAVFAC

SEAL

A/E INFO

APPROVED
James E. Chesney, III
FOR COMMANDER NAVFAC

ACTIVITY
Approved by LCDR VINCE DEL GRECO, ROICC with PWD YORKTOWN, via Email.
SATISFACTORY TO DATE 03/26/2026

DES WLS | DRW MLB | CHK ADT
PM/DM MME/WJW
BRANCH MANAGER DLB
CHIEF ENG/ARCH JWJ
FIRE PROTECTION HPN

DEPARTMENT OF THE NAVY
NAVAL FACILITIES ENGINEERING SYSTEMS COMMAND
MIDLANT PDC CORE
NAVAL FACILITIES ENGINEERING SYSTEMS COMMAND
NAVAL STATION NORFOLK, VIRGINIA
NAVAL WEAPONS STATION
YORKTOWN, VIRGINIA
P-171 WEAPONS MAGAZINES
GENERAL NOTES AND SCHEDULES

SCALE: AS SHOWN
EPROJECT NO.: 1737010
CONSTR. CONTR. NO. ##
NAVFAC DRAWING NO. 12941919
SHEET 265 OF 499
L-001

DRAWFORM REVISION: 14 SEP 2023

FILE NAME: K:\NAVyorktown\MILCON\2024_1737010_P171_Weapons_Magazines\B_Design\DWGS - MAGAZINES\Sheet\06_LAP171-1737010-MAGZ-L-001.dwg PLOTTED: Monday, April 6, 2026 4:11:52 PM USER: mary.talender

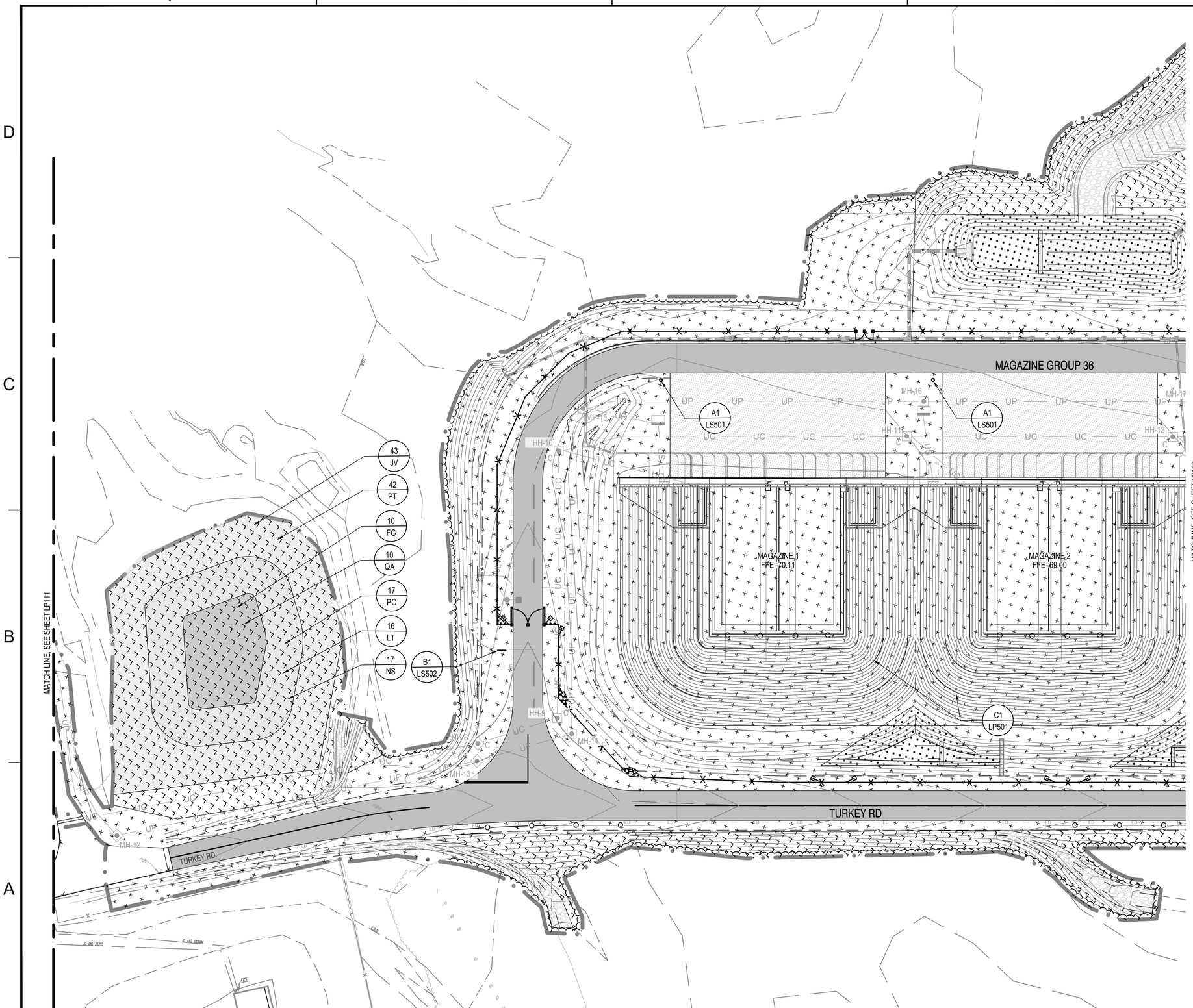


## KEY PLAN

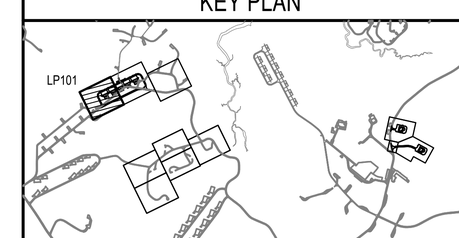


GRAPHIC SCALE

| MARK | DESCRIPTION | DATE |
|---|---|---|

SEAL

A/E INFO

APPROVED
Digitally signed by Vincent A. Greco, P.E.
FOR COMMANDER NAVFAC

ACTIVITY
Approved by LCDR VINCE DEL GRECO, ROICC with PWD YORKTOWN, via Email.
SATISFACTORY TO DATE 03/26/2026

| DES | WLS | DRW | MLB | CHK | ADT |
|---|---|---|---|---|---|

| | |
|---|---|
| PM/DM | MME/WJW |
| BRANCH MANAGER | DLB |
| CHIEF ENG/ARCH | JWJ |
| FIRE PROTECTION | HPN |

DEPARTMENT OF THE NAVY
NAVAL FACILITIES ENGINEERING SYSTEMS COMMAND
MIDLANT PDC CORE

NAVAL FACILITIES ENGINEERING SYSTEMS COMMAND
NAVAL STATION NORFOLK, VIRGINIA

NAVAL WEAPONS STATION
YORKTOWN, VIRGINIA

P-171 WEAPONS MAGAZINES

LANDSCAPE PLAN - MAGAZINE

| | |
|---|---|
| SCALE: | AS SHOWN |
| EPROJECT NO.: | 1737010 |
| CONSTR. CONTR. NO. | ## |
| NAVFAC DRAWING NO. | 12941920 |
| SHEET | 266 OF 499 |

LP101

DRAWFORM REVISION: 14 SEP 2023

FILE NAME: K:\VA\Yorktown\MILCON\2024_1737010_P171_Weapons_Magazines\B_Design\DWGS – MAGAZINE\Sheet\06_LA\LP171-1737010-MAG2-LP101.dwg LAYOUT NAME: LP101 PLOTTED: Tuesday, March 31, 2026 - 2:25pm USER: sarah.m.turner

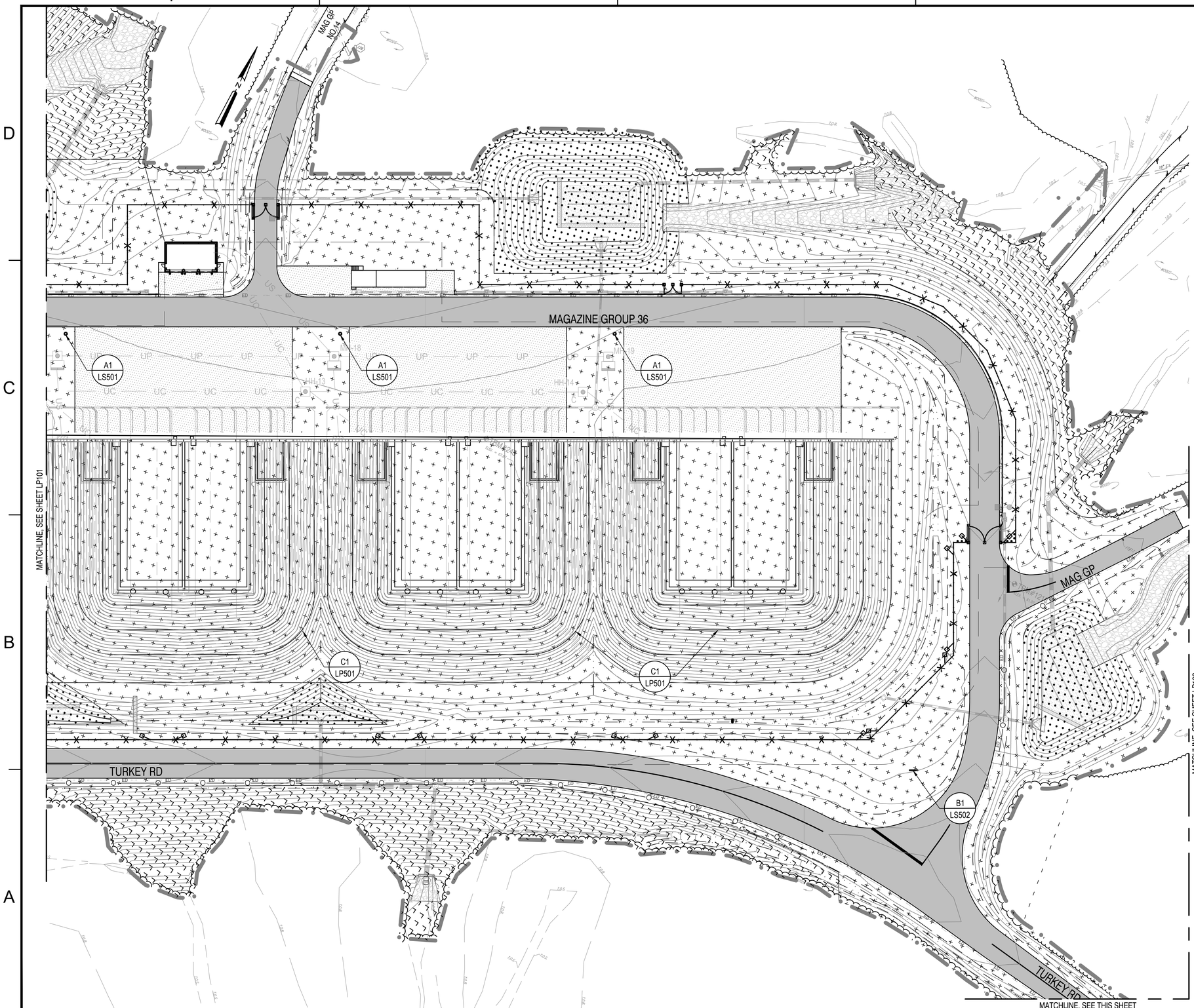


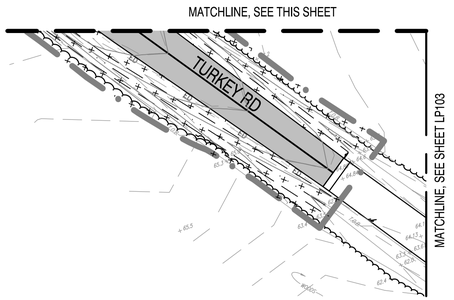


## KEY PLAN

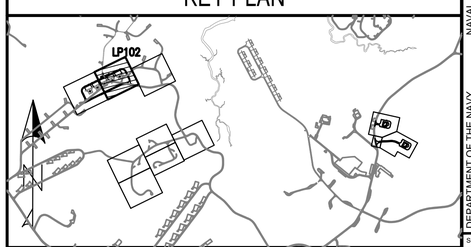


## GRAPHIC SCALE

1"=40' 0' 40' 80'

| MARK | DESCRIPTION | DATE |
|---|---|---|

SEAL

A/E INFO

APPROVED
Jamie E. Donahue, R.A.

FOR COMMANDER NAVFAC

ACTIVITY
Approved by LCDR VINCE DEL GRECO, ROICC with PWD YORKTOWN, via Email.

SATISFACTORY TO DATE 03/26/2026

DES WLS DRW MLB CHK ADT

PM/DM MME/WJW

BRANCH MANAGER DLB

CHIEF ENG/ARCH JWJ

FIRE PROTECTION HPN

DEPARTMENT OF THE NAVY
NAVAL FACILITIES ENGINEERING SYSTEMS COMMAND
MIDLANT PDC CORE

NAVAL FACILITIES ENGINEERING SYSTEMS COMMAND
NAVAL STATION NORFOLK, VIRGINIA

NAVAL WEAPONS STATION
YORKTOWN, VIRGINIA

P-171 WEAPONS MAGAZINES

LANDSCAPE PLAN - MAGAZINE

SCALE: AS SHOWN

EPROJECT NO.: 1737010

CONSTR. CONTR. NO. ##

NAVFAC DRAWING NO. 12941921

SHEET 267 OF 499

LP102

DRAWFORM REVISION: 14 SEP 2023

FILE NAME: K:\VA\Yorktown\MILCON\2024_1737010_P171_Weapons_Magazines\B_Design\DWGS – MAGAZINE\Sheet\DR_LA\P171-1737010-MAGZ-LP102.dwg LAYOUT NAME: LP102 PLOTTED: Tuesday, March 31, 2026 – 2:25pm USER: sarah.m.turner

## KEY PLAN

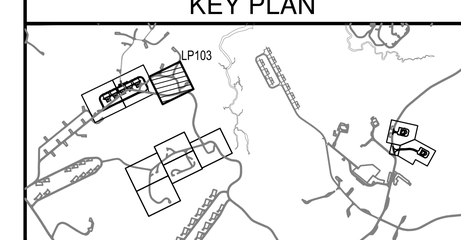


## GRAPHIC SCALE

1"=40' 0' 40' 80'

| MARK | DESCRIPTION | DATE |
|---|---|---|

A/E INFO

APPROVED
James E. Donahue, P.E.

FOR COMMANDER NAVFAC

ACTIVITY
Approved by LCDR VINCE DEL GRECO, ROICC with PWD YORKTOWN, via Email.

SATISFACTORY TO DATE 03/26/2026

DES WLS | DRW MLB | CHK ADT

PM/DM MME/WJW

BRANCH MANAGER DLB

CHIEF ENG/ARCH JWJ

FIRE PROTECTION HPN

DEPARTMENT OF THE NAVY
NAVAL FACILITIES ENGINEERING SYSTEMS COMMAND
MIDLANT PDC CORE

NAVAL FACILITIES ENGINEERING SYSTEMS COMMAND
NAVAL STATION NORFOLK, VIRGINIA

NAVAL WEAPONS STATION
YORKTOWN, VIRGINIA

P-171 WEAPONS MAGAZINES

LANDSCAPE PLAN - MAGAZINE

SCALE: AS SHOWN

EPROJECT NO.: 1737010

CONSTR. CONTR. NO. ##

NAVFAC DRAWING NO. 12941922

SHEET 268 OF 499

LP103

DRAWFORM REVISION: 14 SEP 2023

FILE NAME: K:\VA\Yorktown\WLCOA\2024_1737010_P171_Weapons_Magazines\B_Design\DWGS - MAGAZINE\Sheet\06_LA\P171-1737010-MAG2-LP103.dwg LAYOUT NAME: LP103 PLOTTED: Tuesday, March 31, 2026 - 2:26pm USER: sarah.m.turner

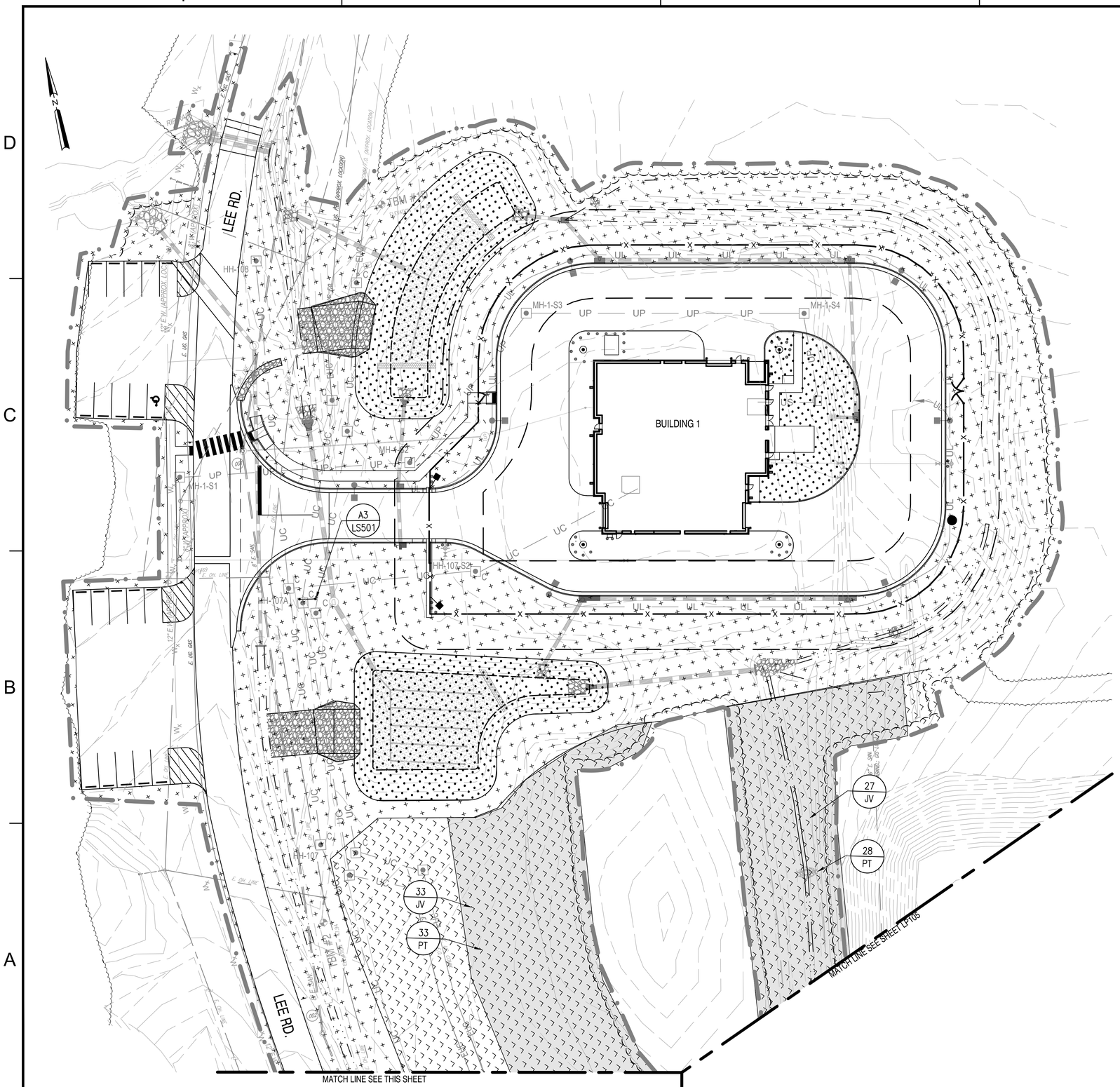


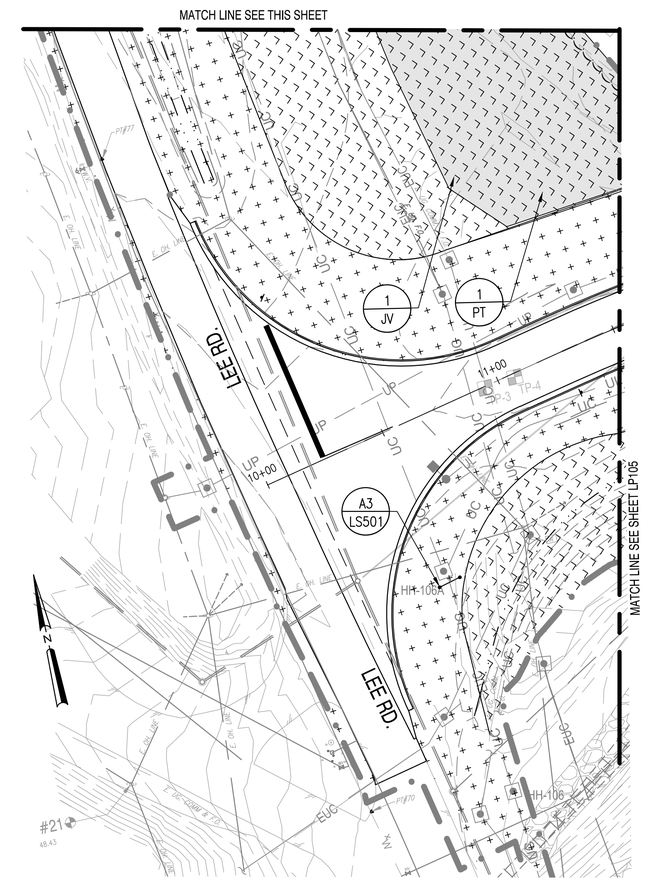


## KEY PLAN

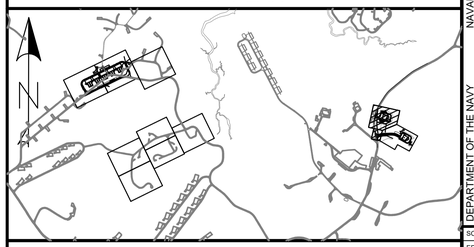

## GRAPHIC SCALE

1"=30' 0' 30' 60'

| MARK | DESCRIPTION | DATE |
|---|---|---|
| | | |

A/E INFO

APPROVED
FOR COMMANDER NAVFAC

ACTIVITY
Approved by LCDR VINCE DEL GRECO, ROICC with PWD YORKTOWN, via Email.
SATISFACTORY TO DATE 03/26/2026

| | | | |
|---|---|---|---|
| DES | WLS | DRW MLB | CHK ADT |
| PM/DM | MME/WJW | | |
| BRANCH MANAGER | DLB | | |
| CHIEF ENG/ARCH | JWJ | | |
| FIRE PROTECTION | HPN | | |

DEPARTMENT OF THE NAVY
NAVAL FACILITIES ENGINEERING SYSTEMS COMMAND
MIDLANT PDC CORE

NAVAL FACILITIES ENGINEERING SYSTEMS COMMAND
NAVAL STATION NORFOLK, VIRGINIA

NAVAL WEAPONS STATION
YORKTOWN, VIRGINIA

P-171 WEAPONS MAGAZINES

LANDSCAPE PLAN - SEGREGATION FACILITIES

| | |
|---|---|
| SCALE: | AS SHOWN |
| EPROJECT NO.: | 1737010 |
| CONSTR. CONTR. NO. | ## |
| NAVFAC DRAWING NO. | 12941923 |
| SHEET | 269 OF 499 |

LP104

DRAWFORM REVISION: 14 SEP 2023

FILE NAME: K:\WA\Yorktown\ML\CON\2024_1737010_P171_Weapons_Magazines\B_Design\DWGS - MAGAZINES\Sheet\06_LA\P171-1737010-BLDG-LP104.dwg LAYOUT NAME: LP104 PLOTTED: Monday, April 08, 2026 - 4:21pm USER: marp.klemler

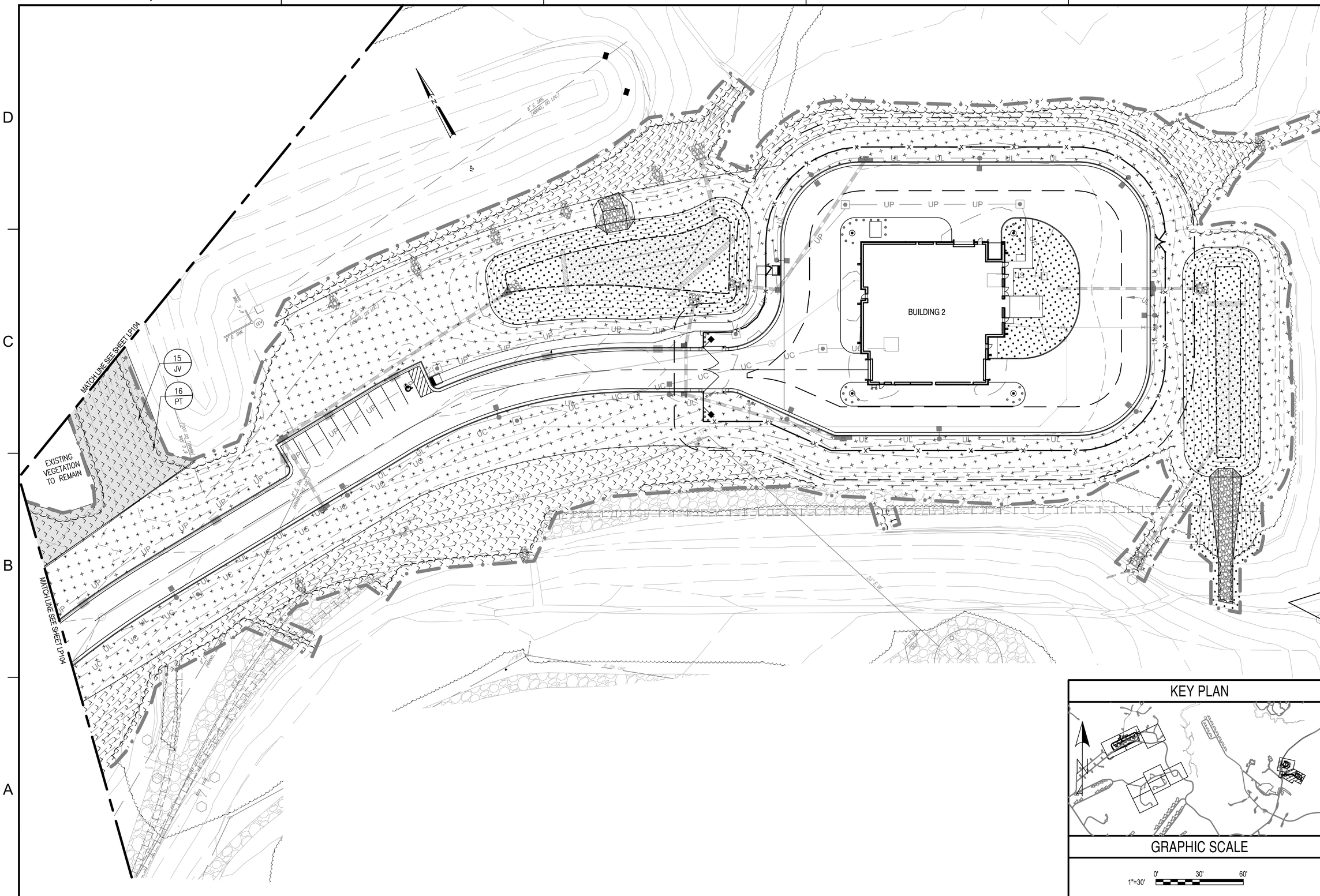


| MARK | DESCRIPTION | DATE |
|---|---|---|

NAVFAC

SEAL

A/E INFO

APPROVED

FOR COMMANDER NAVFAC

ACTIVITY
Approved by LCDR VINCE DEL GRECO, ROICC with PWD YORKTOWN, via Email.

SATISFACTORY TO DATE 03/26/2026

| DES | WLS | DRW | MLB | CHK | ADT |
|---|---|---|---|---|---|

| | |
|---|---|
| PM/DM | MME/WJW |
| BRANCH MANAGER | DLB |
| CHIEF ENG/ARCH | JWJ |
| FIRE PROTECTION | HPN |

DEPARTMENT OF THE NAVY
NAVAL FACILITIES ENGINEERING SYSTEMS COMMAND
MIDLANT PDC CORE

NAVAL FACILITIES ENGINEERING SYSTEMS COMMAND
NAVAL STATION NORFOLK, VIRGINIA

NAVAL WEAPONS STATION
YORKTOWN, VIRGINIA

P-171 WEAPONS MAGAZINES

LANDSCAPE PLAN - SEGREGATION FACILITIES

| | |
|---|---|
| SCALE: | AS SHOWN |
| EPROJECT NO.: | 1737010 |
| CONSTR. CONTR. NO. | ## |
| NAVFAC DRAWING NO. | 12941924 |
| SHEET | 270 OF 499 |

LP105

DRAWFORM REVISION: 14 SEP 2023

FILE NAME: K:\AVYorktown\MILCON\2024_1737010_P171_Weapons_Magazines\B_Design\DWGS_MAGAZINE\Sheets\06_LA\P171-1737010-BLDG-LP104.dwg LAYOUT NAME: LP105 PLOTTED: Monday, April 06, 2026 - 4:19pm USER: mary.blender

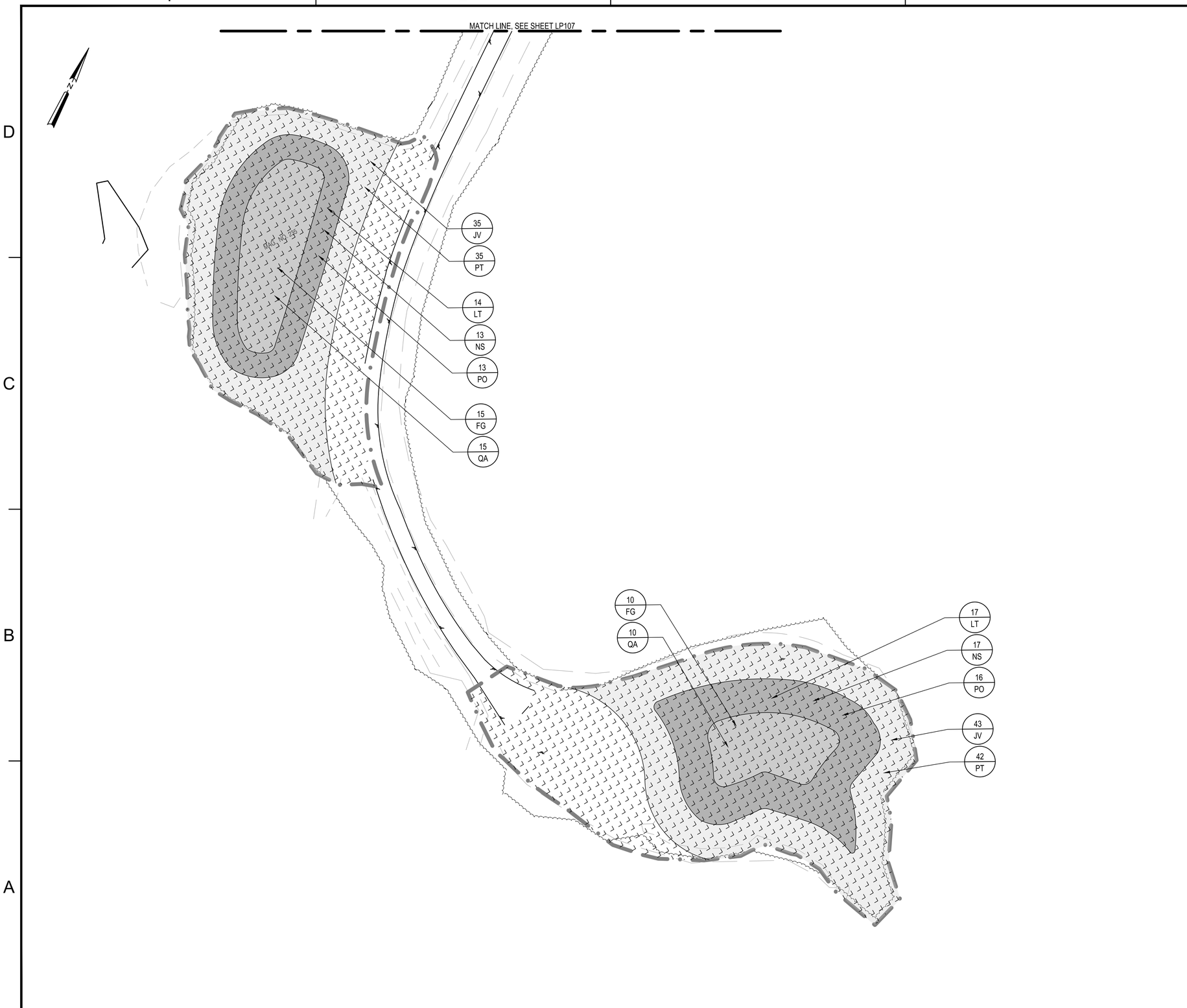


## KEY PLAN

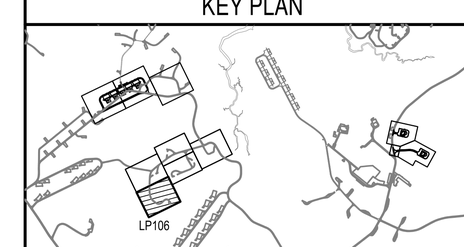


## GRAPHIC SCALE

1"=40'  0'  40'  80'

| MARK | DESCRIPTION | DATE |
|---|---|---|

SEAL

A/E INFO

APPROVED
James E. Donahue, P.E.

FOR COMMANDER NAVFAC

ACTIVITY
Approved by LCDR VINCE DEL GRECO, ROICC with PWD YORKTOWN, via Email.

SATISFACTORY TO DATE 03/26/2026

DES WLS | DRW MLB | CHK ADT

PM/DM MME/WJW

BRANCH MANAGER DLB

CHIEF ENG/ARCH JWJ

FIRE PROTECTION HPN

DEPARTMENT OF THE NAVY
NAVAL FACILITIES ENGINEERING SYSTEMS COMMAND
MIDLANT PDC CORE

NAVAL FACILITIES ENGINEERING SYSTEMS COMMAND
NAVAL STATION NORFOLK, VIRGINIA

NAVAL WEAPONS STATION
YORKTOWN, VIRGINIA

P-171 WEAPONS MAGAZINES

LANDSCAPE PLAN - DEMOLITION SITE

SCALE: AS SHOWN

EPROJECT NO.: 1737010

CONSTR. CONTR. NO. ##

NAVFAC DRAWING NO. 12941925

SHEET 271 OF 499

LP106

DRAWFORM REVISION: 14 SEP 2023

FILE NAME: K:\YAYorktown\MILCON\2024_1737010_P171_Weapons_Magazines\B_Design\DWGS - MAGAZINE\Sheet\06_LAP171-1737010-DEMO-LP106.dwg LAYOUT NAME: LP106 PLOTTED: Tuesday, March 31, 2026 - 2:28pm USER: sarah.m.turner

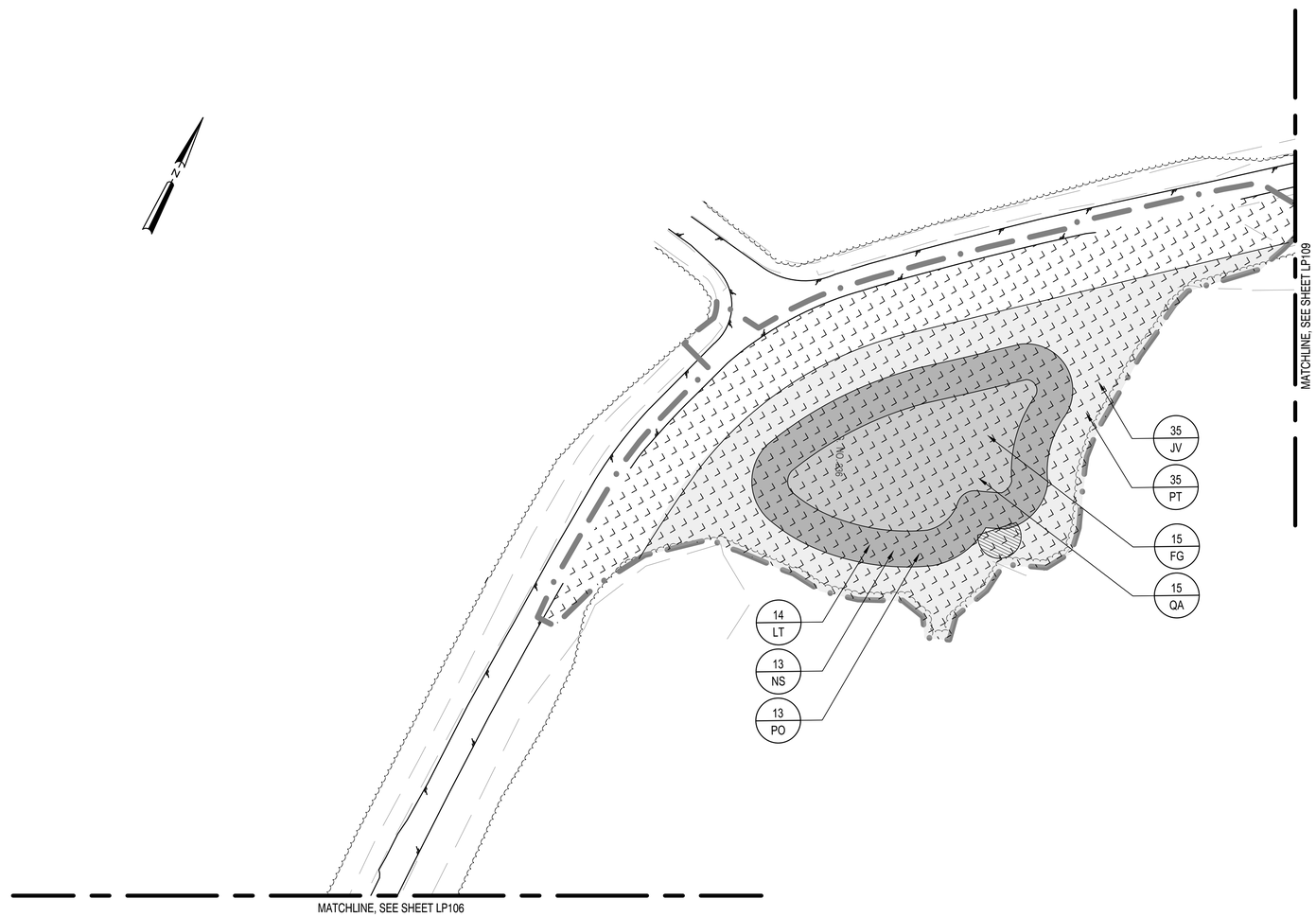


KEY PLAN

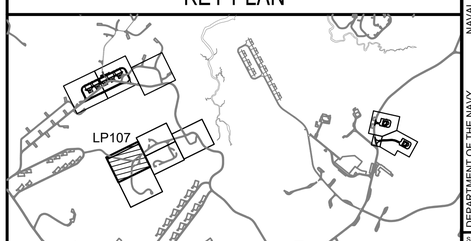


GRAPHIC SCALE

1"=40' 0' 40' 80'

| MARK | DESCRIPTION | DATE |
|---|---|---|

SEAL

A/E INFO

APPROVED
Digitally signed by Brian K. Fitzpatrick
FOR COMMANDER NAVFAC

ACTIVITY
Approved by LCDR VINCE DEL GRECO, ROICC with PWD YORKTOWN, via Email.
SATISFACTORY TO DATE 03/26/2026

| DES | DRW | CHK |
|---|---|---|
| WLS | MLB | ADT |

| | |
|---|---|
| PM/DM | MME/WJW |
| BRANCH MANAGER | DLB |
| CHIEF ENG/ARCH | JWJ |
| FIRE PROTECTION | HPN |

DEPARTMENT OF THE NAVY
NAVAL FACILITIES ENGINEERING SYSTEMS COMMAND
MIDLANT PDC CORE

NAVAL FACILITIES ENGINEERING SYSTEMS COMMAND
NAVAL STATION NORFOLK, VIRGINIA

NAVAL WEAPONS STATION
YORKTOWN, VIRGINIA

P-171 WEAPONS MAGAZINES

LANDSCAPE PLAN - DEMOLITION SITE

| | |
|---|---|
| SCALE: | AS SHOWN |
| EPROJECT NO.: | 1737010 |
| CONSTR. CONTR. NO. | ## |
| NAVFAC DRAWING NO. | 12941926 |
| SHEET | 272 OF 499 |

LP107

DRAWFORM REVISION: 14 SEP 2023

FILE NAME: K:\WA\Yorktown\MLC\CN\2024_1737010_P171_Weapons_Magazines\B_Design\DWGS - MAGAZINES\Sheet\06_LA\P171-1737010-DEMO-LP106.dwg LAYOUT NAME: LP107 PLOTTED: Tuesday, March 31, 2026 - 2:28pm USER: sarah.n.turner

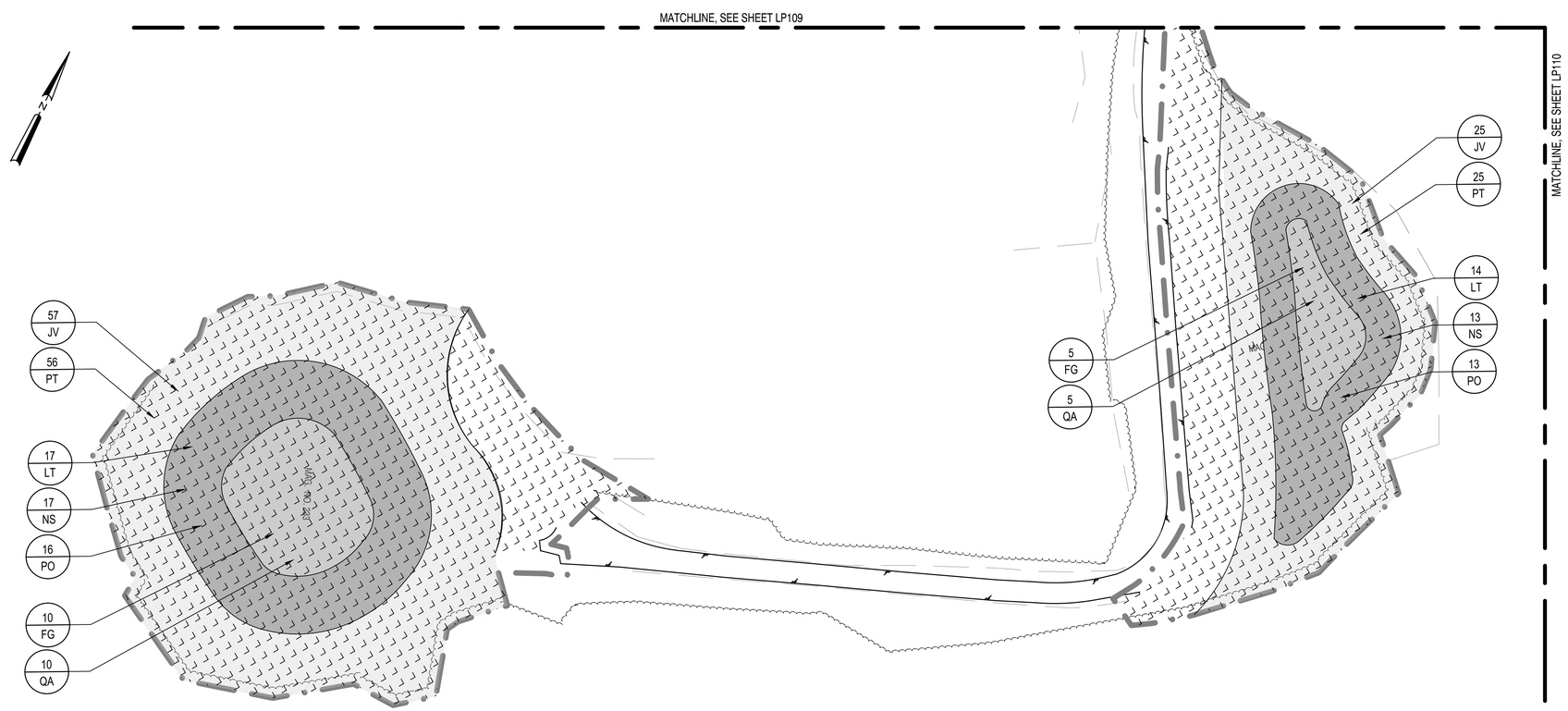


## KEY PLAN

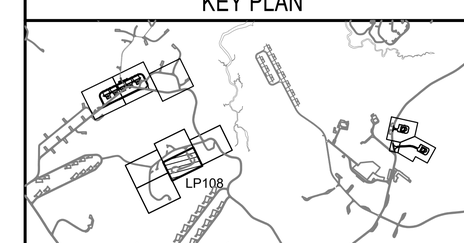


## GRAPHIC SCALE

1"=40' 0' 40' 80'

| MARK | DESCRIPTION | DATE |
|---|---|---|

NAVFAC

SEAL

A/E INFO

APPROVED
Digitally signed by
FOR COMMANDER NAVFAC

ACTIVITY
Approved by LCDR VINCE DEL GRECO, ROICC with PWD YORKTOWN, via Email.

SATISFACTORY TO DATE 03/26/2026

DES WLS | DRW MLB | CHK ADT

PM/DM MME/WJW

BRANCH MANAGER DLB

CHIEF ENG/ARCH JWJ

FIRE PROTECTION HPN

DEPARTMENT OF THE NAVY
NAVAL FACILITIES ENGINEERING SYSTEMS COMMAND
MIDLANT PDC CORE

NAVAL FACILITIES ENGINEERING SYSTEMS COMMAND
NAVAL STATION NORFOLK, VIRGINIA

NAVAL WEAPONS STATION
YORKTOWN, VIRGINIA

P-171 WEAPONS MAGAZINES

LANDSCAPE PLAN - DEMOLITION SITE

SCALE: AS SHOWN

EPROJECT NO.: 1737010

CONSTR. CONTR. NO. ##

NAVFAC DRAWING NO. 12941927

SHEET 273 OF 499

LP108

DRAWFORM REVISION: 14 SEP 2023

FILE NAME: K:\WAYnkown\MILCON\2024_1737010_P171_Weapons_Magazines\B_Design\DWGS - MAGAZINE\Sheet\06_LA\P171-1737010-DEMO-LP108.dwg LAYOUT NAME: LP108 PLOTTED: Tuesday, March 31, 2026 - 2:28pm USER: sarah.n.turner

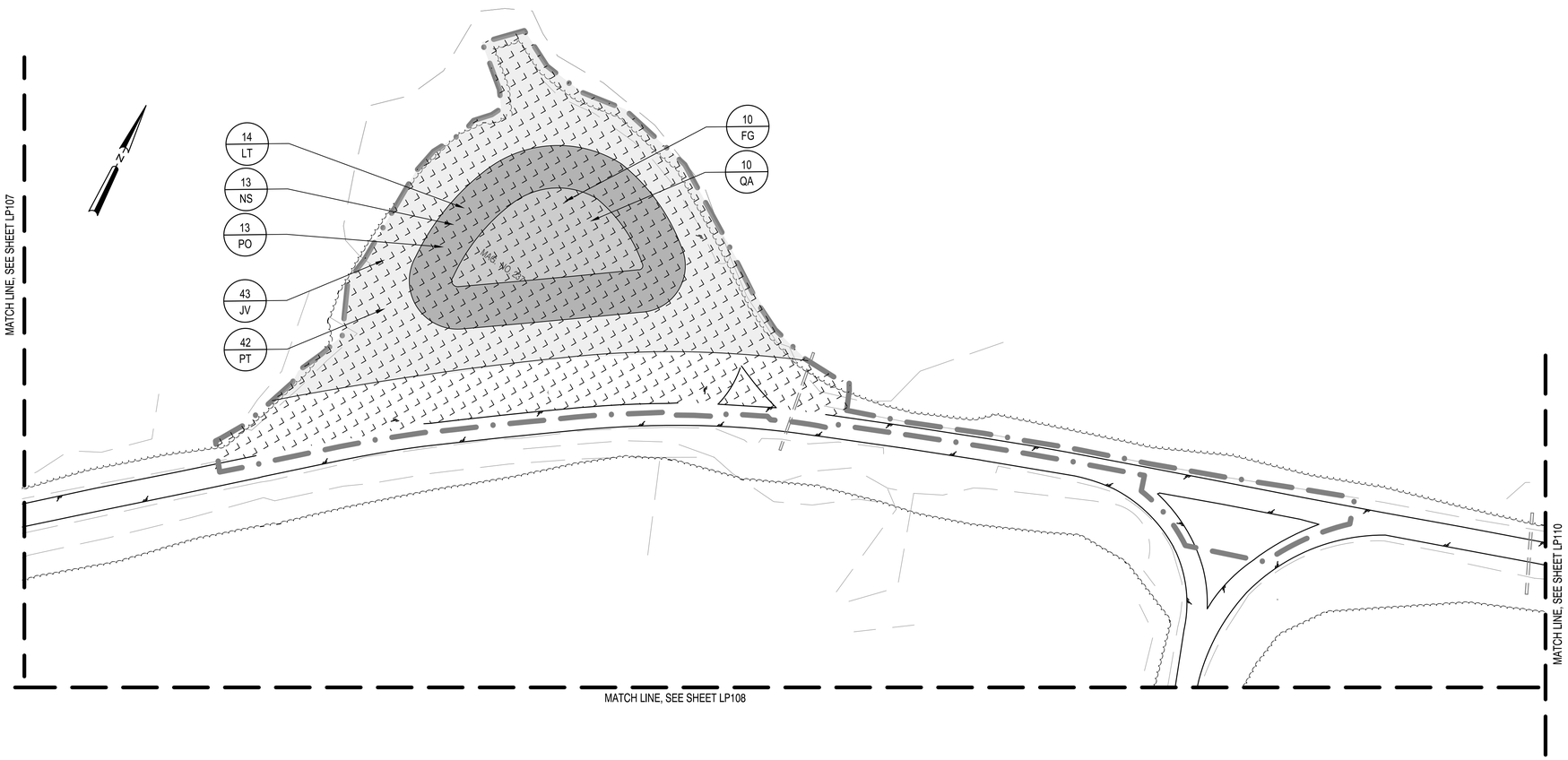


## KEY PLAN

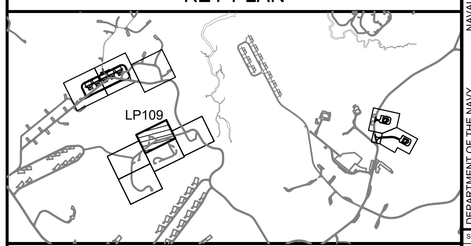


## GRAPHIC SCALE

1"=40'  0'  40'  80'

| MARK | DESCRIPTION | DATE |
|---|---|---|

NAVFAC

SEAL

A/E INFO

APPROVED
Digitally signed by Vincent Del Greco, R.A.

FOR COMMANDER NAVFAC

ACTIVITY
Approved by LCDR VINCE DEL GRECO, ROICC with PWD YORKTOWN, via Email.

SATISFACTORY TO DATE 03/26/2026

| DES | WLS | DRW | MLB | CHK | ADT |
|---|---|---|---|---|---|

| | |
|---|---|
| PM/DM | MME/WJW |
| BRANCH MANAGER | DLB |
| CHIEF ENG/ARCH | JWJ |
| FIRE PROTECTION | HPN |

DEPARTMENT OF THE NAVY
NAVAL FACILITIES ENGINEERING SYSTEMS COMMAND
MIDLANT PDC CORE

NAVAL FACILITIES ENGINEERING SYSTEMS COMMAND
NAVAL STATION NORFOLK, VIRGINIA

NAVAL WEAPONS STATION
YORKTOWN, VIRGINIA

P-171 WEAPONS MAGAZINES

LANDSCAPE PLAN - DEMOLITION SITE

SCALE: AS SHOWN

EPROJECT NO.: 1737010

CONSTR. CONTR. NO. ##

NAVFAC DRAWING NO. 12941928

SHEET 274 OF 499

LP109

DRAWFORM REVISION: 14 SEP 2023

FILE NAME: K:\WAYorktown\MILCON\2024_1737010_P171_Weapons_Magazines\B_Design\DWGS - MAGAZINE\Sheet06_LA\P171-1737010-DEMO-LP106.dwg LAYOUT NAME: LP109 PLOTTED: Tuesday, March 31, 2026 - 2:28pm USER: sarah.m.turner

## KEY PLAN

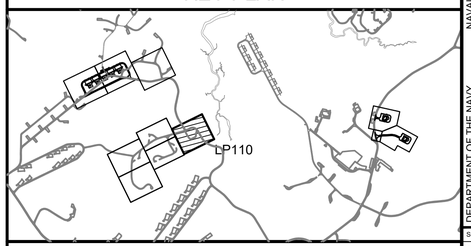


## GRAPHIC SCALE

1"=40'  0'  40'  80'

| MARK | DESCRIPTION | DATE |
|---|---|---|

SEAL

A/E INFO

APPROVED
James E. Crosslow, P.E.
FOR COMMANDER NAVFAC

ACTIVITY
Approved by LCDR VINCE DEL GRECO, ROICC with PWD YORKTOWN, via Email.
SATISFACTORY TO DATE 03/26/2026

DES WLS | DRW MLB | CHK ADT
PM/DM MME/WJW
BRANCH MANAGER DLB
CHIEF ENG/ARCH JWJ
FIRE PROTECTION HPN

DEPARTMENT OF THE NAVY
NAVAL FACILITIES ENGINEERING SYSTEMS COMMAND
MIDLANT PDC CORE

NAVAL FACILITIES ENGINEERING SYSTEMS COMMAND
NAVAL STATION NORFOLK, VIRGINIA

NAVAL WEAPONS STATION
YORKTOWN, VIRGINIA

P-171 WEAPONS MAGAZINES

LANDSCAPE PLAN - DEMOLITION SITE

SCALE: AS SHOWN
EPROJECT NO.: 1737010
CONSTR. CONTR. NO. ##
NAVFAC DRAWING NO. 12941929
SHEET 275 OF 499

LP110

DRAWFORM REVISION: 14 SEP 2023

FILE NAME: K:\AYorktown\MILCON\2204_1737010_P171_Weapons_Magazines\B_Design\DWGS - MAGAZINE\Sheet\06_LAP171-1737010-DEMO-LP108.dwg LAYOUT NAME: LP110 PLOTTED: Tuesday, March 31, 2026 - 2:29pm USER: sarah.n.turner

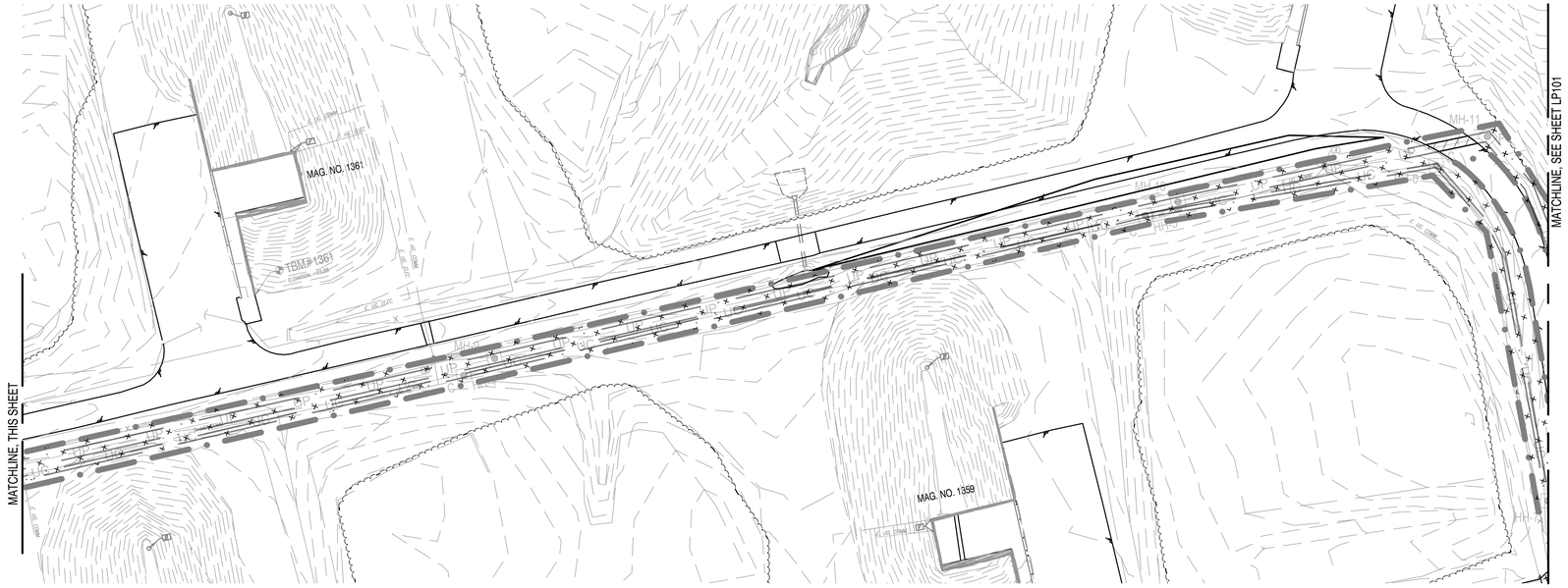


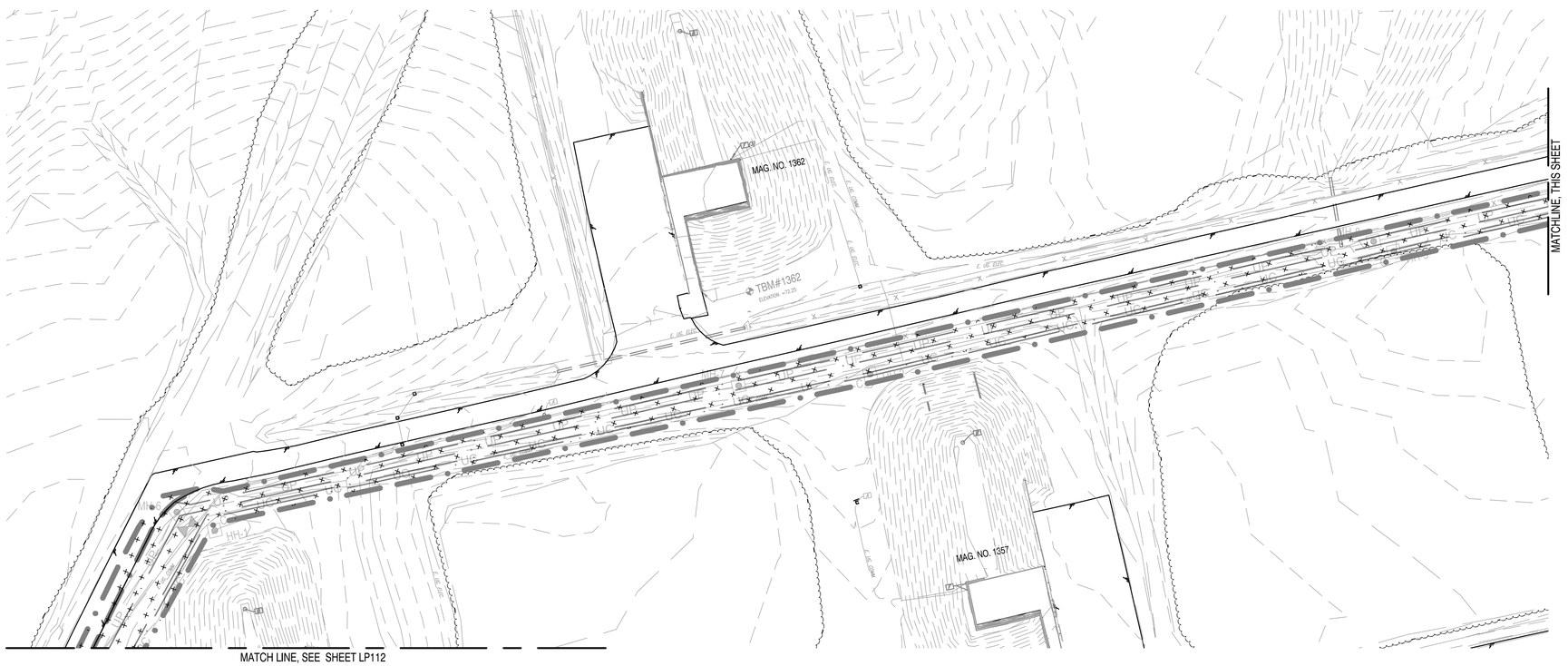


## KEY PLAN

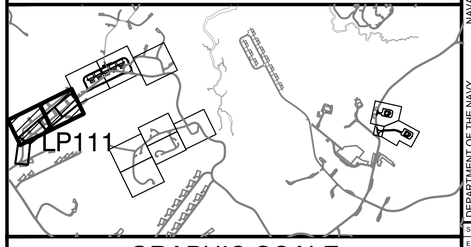


## GRAPHIC SCALE

1"=40' 0' 40' 80'

| MARK | DESCRIPTION | DATE |
|---|---|---|

SEAL

A/E INFO

APPROVED

FOR COMMANDER NAVFAC

ACTIVITY
Approved by LCDR VINCE DEL GRECO, ROICC with PWD YORKTOWN, via Email.
SATISFACTORY TO DATE 03/26/2026

DES WLS | DRW MLB | CHK ADT
PM/DM MME/WJW
BRANCH MANAGER DLB
CHIEF ENG/ARCH JWJ
FIRE PROTECTION HPN

DEPARTMENT OF THE NAVY
NAVAL FACILITIES ENGINEERING SYSTEMS COMMAND
MIDLANT PDC CORE

NAVAL FACILITIES ENGINEERING SYSTEMS COMMAND
NAVAL STATION NORFOLK, VIRGINIA

NAVAL WEAPONS STATION
YORKTOWN, VIRGINIA

P-171 WEAPONS MAGAZINES

LANDSCAPE PLAN - ELECTRICAL DUCT BANK

SCALE: AS SHOWN
EPROJECT NO.: 1737010
CONSTR. CONTR. NO. ##
NAVFAC DRAWING NO. 12941930
SHEET 276 OF 499

LP111

DRAWFORM REVISION: 14 SEP 2023

FILE NAME: K:\NAVYyorktown\MILCON\2024_1737010_P171_Weapons_Magazines\B_Design\DWGS - MAGAZINE\Sheet\06_LAP171-1737010-ELEC-LP111.dwg PLOTTED: Tuesday, March 31, 2026 2:30:48 PM USER: mary.blender

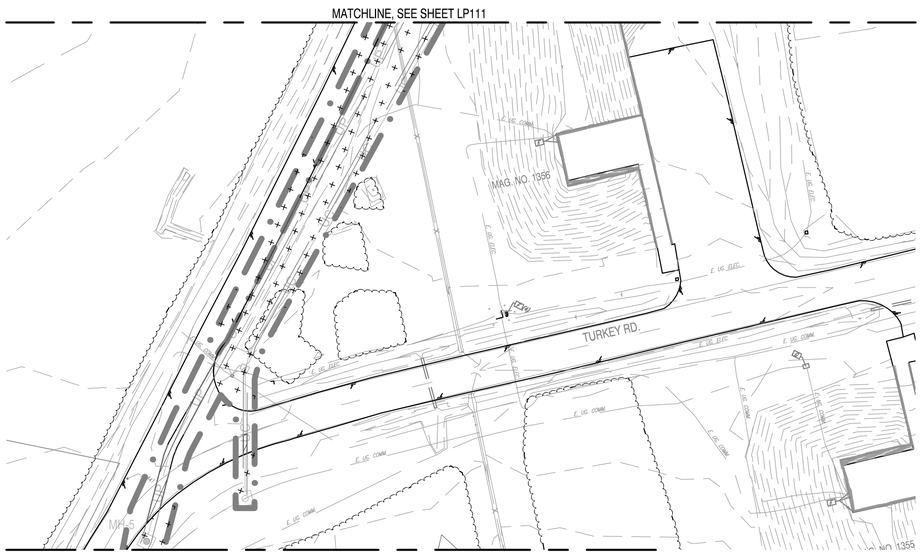


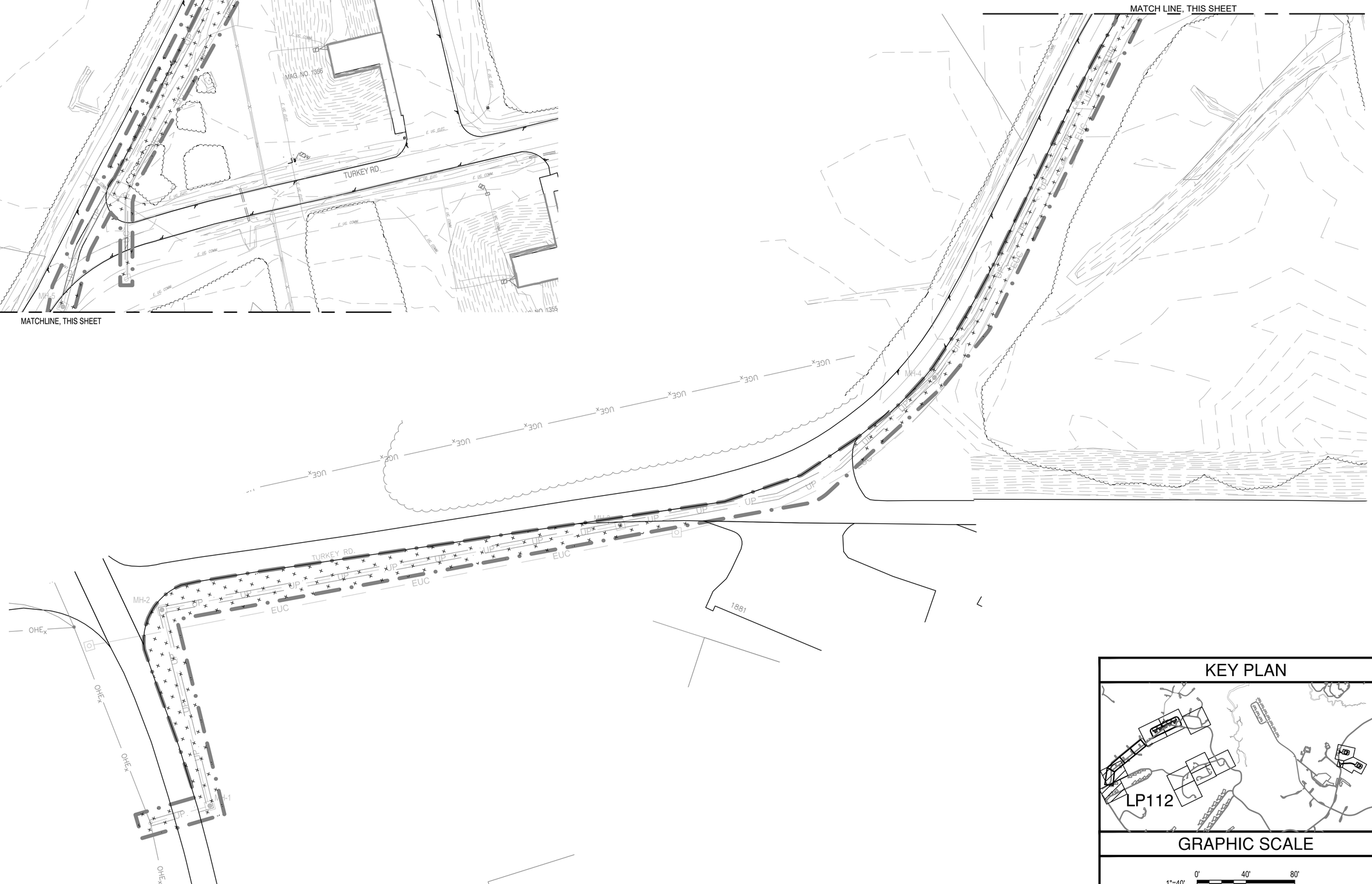


## KEY PLAN




## GRAPHIC SCALE

1"=40' 0' 40' 80'

| MARK | DESCRIPTION | DATE |
|---|---|---|

SEAL

A/E INFO

APPROVED

FOR COMMANDER NAVFAC

ACTIVITY
Approved by LCDR VINCE DEL GRECO, ROICC with PWD YORKTOWN, via Email.

SATISFACTORY TO DATE 03/26/2026

| DES | WLS | DRW | MLB | CHK | ADT |
|---|---|---|---|---|---|

| | |
|---|---|
| PM/DM | MME/WJW |
| BRANCH MANAGER | DLB |
| CHIEF ENG/ARCH | JWJ |
| FIRE PROTECTION | HPN |

DEPARTMENT OF THE NAVY
NAVAL FACILITIES ENGINEERING SYSTEMS COMMAND
MIDLANT PDC CORE

NAVAL FACILITIES ENGINEERING SYSTEMS COMMAND
NAVAL STATION NORFOLK, VIRGINIA

NAVAL WEAPONS STATION
YORKTOWN, VIRGINIA

P-171 WEAPONS MAGAZINES

# LANDSCAPE PLAN - ELECTRICAL DUCT BANK

SCALE: AS SHOWN

EPROJECT NO.: 1737010

CONSTR. CONTR. NO. ##

NAVFAC DRAWING NO. 12941931

SHEET 277 OF 499

LP112

DRAWFORM REVISION: 14 SEP 2023

FILE NAME: K:\NAVYorktown\MILCON\2024_1737010_P171_Weapons_Magazines\B_Design\DWGS - MAGAZINE\Sheet\06_LAP171-1737010-ELEC-LP112.dwg PLOTTED: Tuesday, March 31, 2026 2:32:32 PM USER: mary.blender

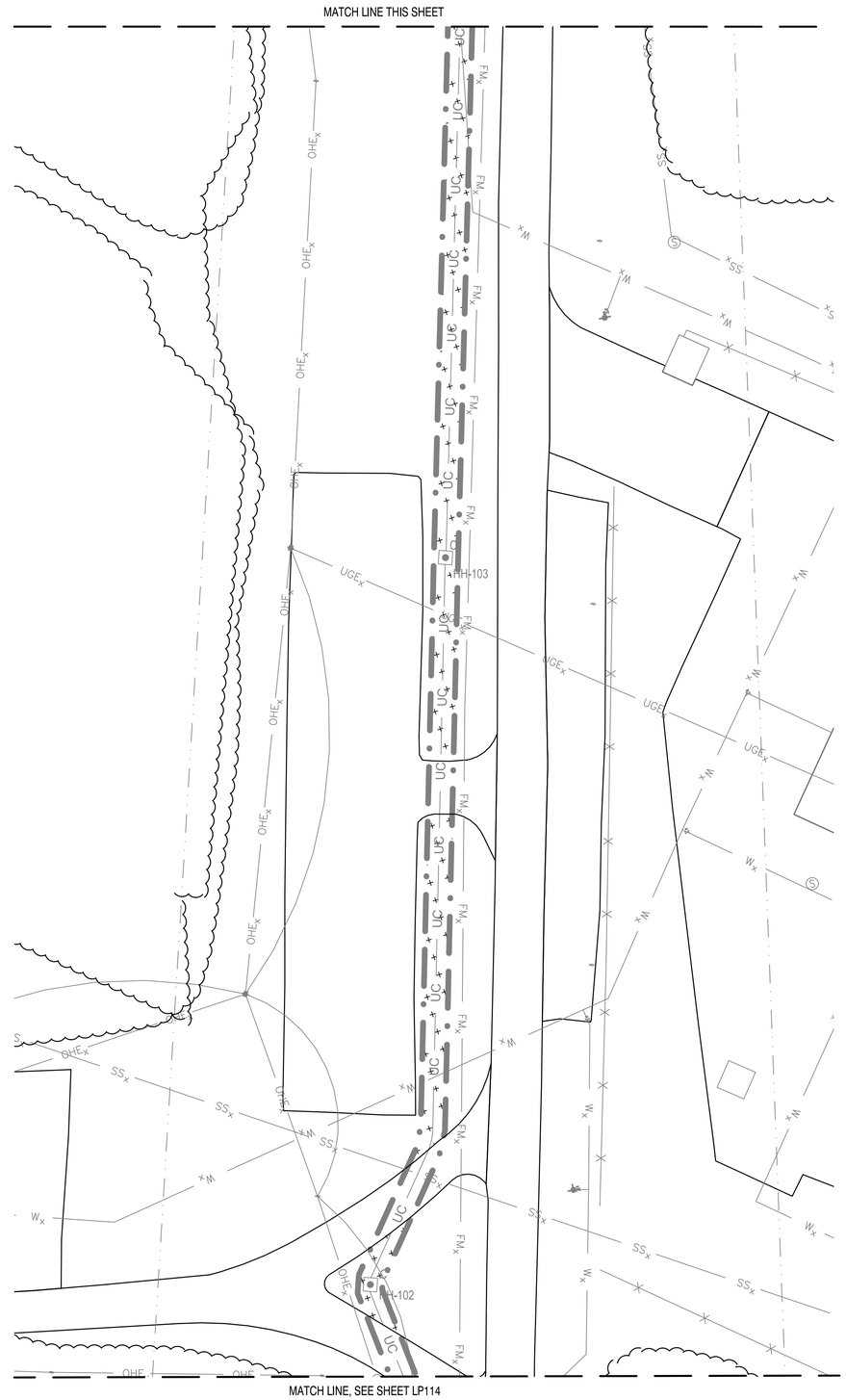


NOTE:
ALL WORK ON SHEETS LP113 AND LP114 IS A BID OPTION

## KEY PLAN

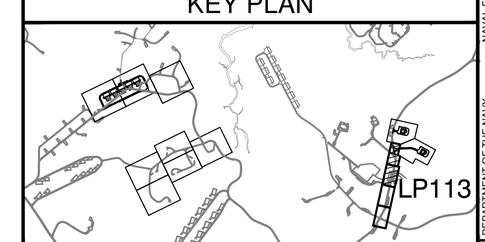


## GRAPHIC SCALE

1"=30' 0' 30' 60'

| MARK | DESCRIPTION | DATE |
|---|---|---|

SEAL

A/E INFO

APPROVED

FOR COMMANDER NAVFAC

ACTIVITY
Approved by LCDR VINCE DEL GRECO, ROICC with PWD YORKTOWN, via Email.

SATISFACTORY TO DATE 03/26/2026

DES WJW DRW SMT CHK WJW

PM/DM MME/WJW

BRANCH MANAGER DLB

CHIEF ENG/ARCH JWJ

FIRE PROTECTION HPN

DEPARTMENT OF THE NAVY
NAVAL FACILITIES ENGINEERING SYSTEMS COMMAND
MIDLANT PDC CORE

NAVAL FACILITIES ENGINEERING SYSTEMS COMMAND
NAVAL STATION NORFOLK, VIRGINIA

NAVAL WEAPONS STATION
YORKTOWN, VIRGINIA

P-171 WEAPONS MAGAZINES

LANDSCAPE PLAN - ELECTRICAL DUCT BANK

SCALE: AS SHOWN

EPROJECT NO.: 1737010

CONSTR. CONTR. NO. ##

NAVFAC DRAWING NO. 12941932

SHEET 278 OF 499

LP113

DRAWFORM REVISION: 14 SEP 2023

NOTE:
ALL WORK ON SHEETS LP113 AND LP114 IS A BID OPTION

## KEY PLAN

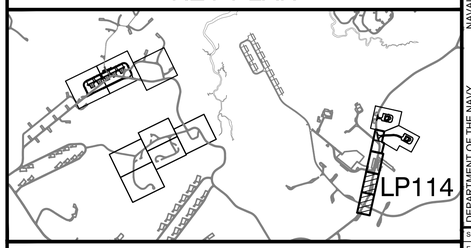


## GRAPHIC SCALE

1"=30' 0' 30' 60'

| MARK | DESCRIPTION | DATE |
|---|---|---|

SEAL

A/E INFO

APPROVED
James F. Donohue, P.E.

FOR COMMANDER NAVFAC

ACTIVITY
Approved by LCDR VINCE DEL GRECO, ROICC with PWD YORKTOWN, via Email.

SATISFACTORY TO DATE 03/26/2026

DES WJW | DRW SMT | CHK WJW

PM/DM MME/WJW

BRANCH MANAGER DLB

CHIEF ENG/ARCH JWJ

FIRE PROTECTION HPN

DEPARTMENT OF THE NAVY
NAVAL FACILITIES ENGINEERING SYSTEMS COMMAND
MIDLANT PDC CORE

NAVAL FACILITIES ENGINEERING SYSTEMS COMMAND
NAVAL STATION NORFOLK, VIRGINIA

NAVAL WEAPONS STATION
YORKTOWN, VIRGINIA

P-171 WEAPONS MAGAZINES

LANDSCAPE PLAN - ELECTRICAL DUCT BANK

SCALE: AS SHOWN

EPROJECT NO.: 1737010

CONSTR. CONTR. NO. ##

NAVFAC DRAWING NO. 12941933

SHEET 279 OF 499

LP114

DRAWFORM REVISION: 14 SEP 2023

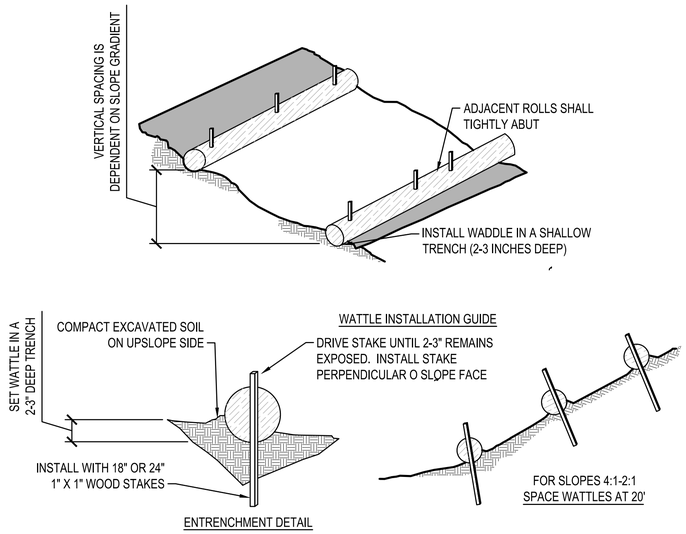


## C1 STRAW WATTLE DETAIL

SCALE: N.T.S.

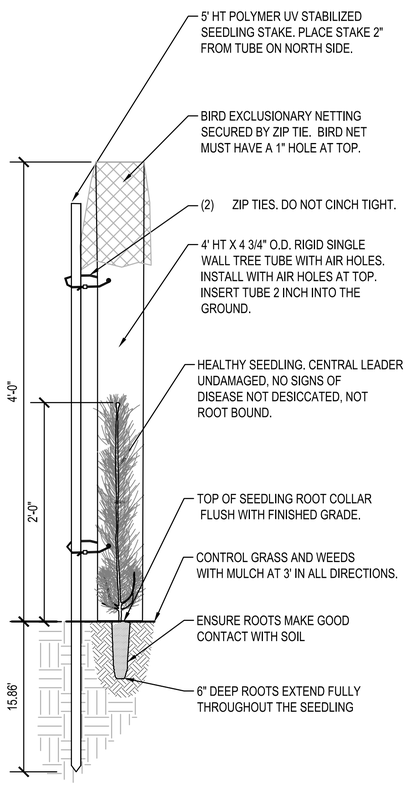


## A1 REFORESTATION PLANTING DETAIL

1 1/2"=1'-0"

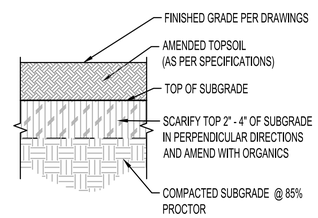


## B2 TOPSOIL INSTALLATION DETAIL

1 1/2"=1'-0"

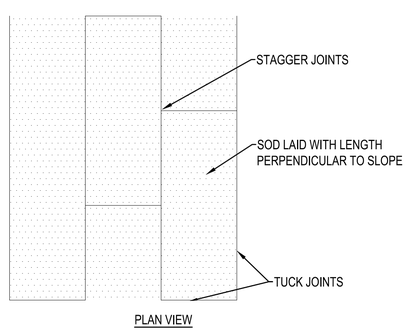


## A2 SOD INSTALLATION PLAN

1/2"=1'-0"

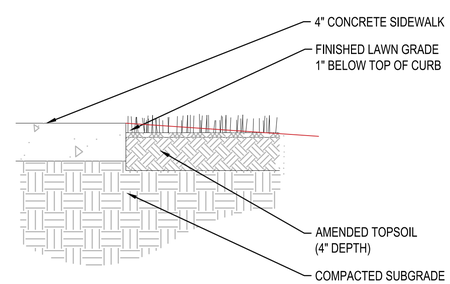


## A3 SOD PLANTING SECTION DETAIL

1 1/2"=1'-0"

GRAPHIC SCALE

1/2"=1'-0" 0' 1' 2' 4'

1-1/2"=1'-0" 0 6" 1' 1'-6"

| MARK | DESCRIPTION | DATE |
|---|---|---|

SEAL

A/E INFO

APPROVED
Jamie S. Delahay, R.A.

FOR COMMANDER NAVFAC

ACTIVITY
Approved by LCDR VINCE DEL GRECO, ROICC with PWD YORKTOWN, via Email.

SATISFACTORY TO DATE 03/26/2026

DES WLS | DRW MLB | CHK ADT

PM/DM MME/WJW

BRANCH MANAGER DLB

CHIEF ENG/ARCH JWJ

FIRE PROTECTION HPN

DEPARTMENT OF THE NAVY
NAVAL FACILITIES ENGINEERING SYSTEMS COMMAND
MIDLANT PDC CORE

NAVAL FACILITIES ENGINEERING SYSTEMS COMMAND
NAVAL STATION NORFOLK, VIRGINIA

NAVAL WEAPONS STATION
YORKTOWN, VIRGINIA

P-171 WEAPONS MAGAZINES

PLANTING DETAILS

SCALE: AS SHOWN

EPROJECT NO.: 1737010

CONSTR. CONTR. NO. ##

NAVFAC DRAWING NO. 12941934

SHEET 280 OF 499

LP501

DRAWFORM REVISION: 14 SEP 2023

FILE NAME: K:\AV\Yorktown\MILCON\2024_1737010_P171_Weapons_Magazines\B_Design\DWGS - MAGAZINE\Sheet\06_LAP171-1737010-DETL-PLNT-LP501.dwg PLOTTED: Tuesday, March 31, 2026 2:36:29 PM USER: mary.jakmler

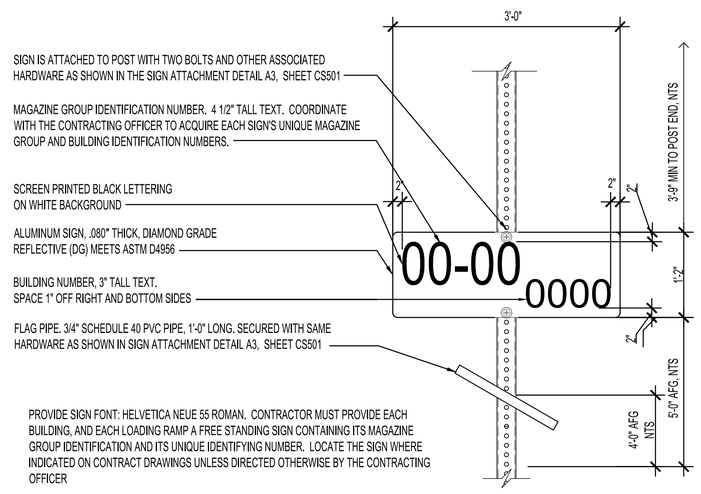


PROVIDE SIGN FONT: HELVETICA NEUE 55 ROMAN. CONTRACTOR MUST PROVIDE EACH BUILDING, AND EACH LOADING RAMP A FREE STANDING SIGN CONTAINING ITS MAGAZINE GROUP IDENTIFICATION AND ITS UNIQUE IDENTIFYING NUMBER. LOCATE THE SIGN WHERE INDICATED ON CONTRACT DRAWINGS UNLESS DIRECTED OTHERWISE BY THE CONTRACTING OFFICER

## A1 MAGAZINE IDENTIFICATION SIGN

SCALE: 1 1/2"=1'-0"

NOTE:
1. DOUBLE SIDED SIGN
2. PROVIDE CONSTRUCTION SHOP DRAWINGS FOR GOVERNMENT APPROVAL PRIOR TO MANUFACTURING.
3. CONTRACTING OFFICER TO CONFIRM PARKING LOT NAME AND ORIENTATION OF DIRECTIONAL ARROW.
4. SIGN TO BE PAINTED ON ALL SIDES WITH AUTOMOTIVE QUALITY PAINT.

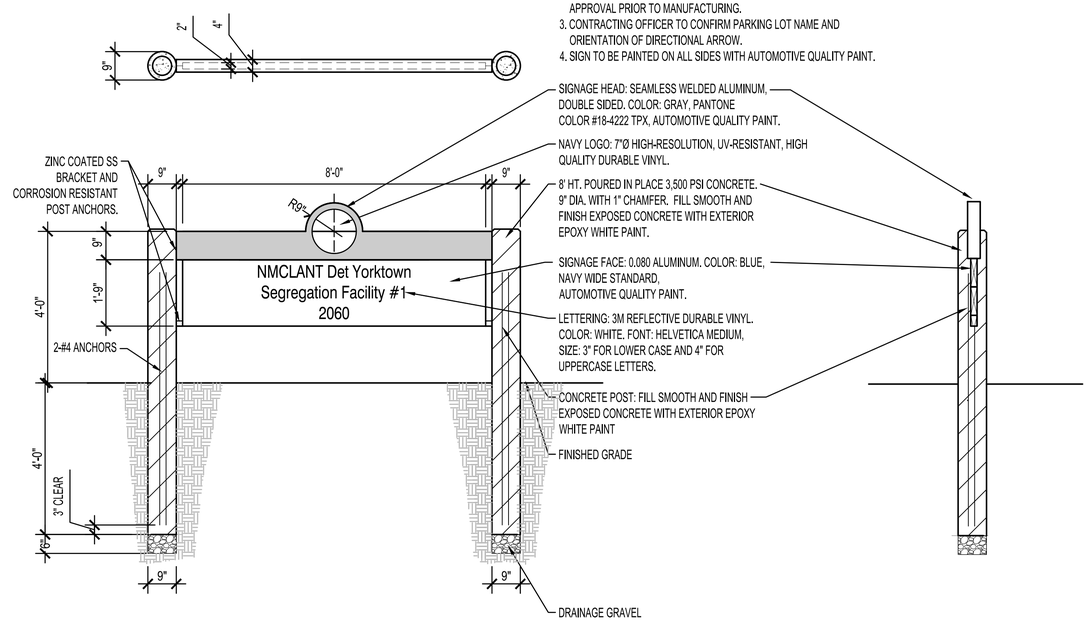


## A3 SEGREGATION BUILDING DOUBLE SIDED SIGN

SCALE: 1/2"=1'-0"

| MARK | DESCRIPTION | DATE |
|---|---|---|

SEAL

A/E INFO

APPROVED
Digitally signed by Jeffrey A. Lee
FOR COMMANDER NAVFAC

ACTIVITY
Approved by LCDR VINCE DEL GRECO, ROICC with PWD YORKTOWN, via Email.
SATISFACTORY TO DATE 03/26/2026

| | | | |
|---|---|---|---|
| DES | WLS | DRW MLB | CHK ADT |
| PM/DM | MME/WJW | | |
| BRANCH MANAGER | DLB | | |
| CHIEF ENG/ARCH | JWJ | | |
| FIRE PROTECTION | HPN | | |

DEPARTMENT OF THE NAVY
NAVAL FACILITIES ENGINEERING SYSTEMS COMMAND
MIDLANT PDC CORE
NAVAL FACILITIES ENGINEERING SYSTEMS COMMAND
NAVAL STATION NORFOLK, VIRGINIA
NAVAL WEAPONS STATION
YORKTOWN, VIRGINIA
P-171 WEAPONS MAGAZINES
SIGNAGE DETAILS

SCALE: AS SHOWN
EPROJECT NO.: 1737010
CONSTR. CONTR. NO. ##
NAVFAC DRAWING NO. 12941935
SHEET 281 OF 499

LS501

DRAWFORM REVISION: 14 SEP 2023

FILE NAME: K:\VA\Yorktown\MILCON\2024_1737010_P171_Weapons_Magazines\B_Design\DWGS – MAGAZINE\Sheet\06_LA\P171–1737010–DETL–SIGN–LS501.dwg LAYOUT NAME: LS501 PLOTTED: Tuesday, March 31, 2026 – 2:35pm USER: sarah.m.turner

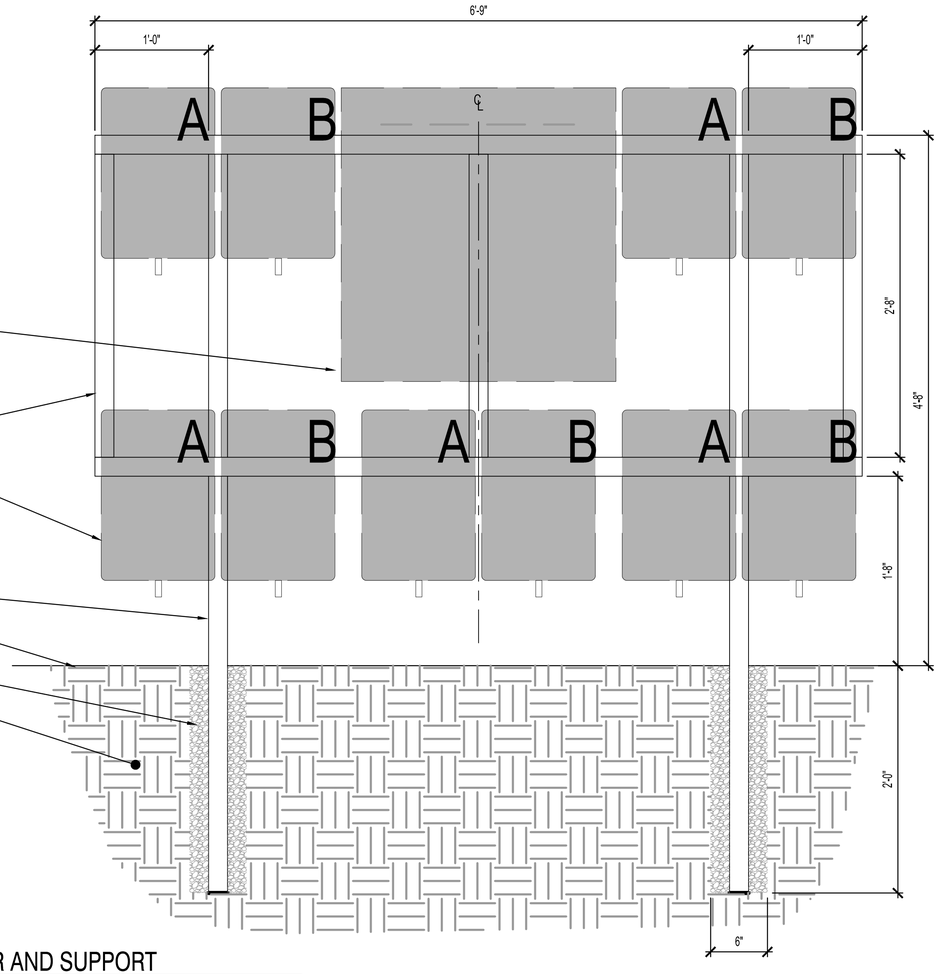


NOTE:
SUBMIT SHOP DRAWINGS FOR THIS HAZARD SIGN CLUSTER, INCLUDING SIGNAGE AND THE ALUMINUM BOX.

## B1 MAGAZINE HAZARD SIGN CLUSTER AND SUPPORT

SCALE: 1 1/2"=1'-0"

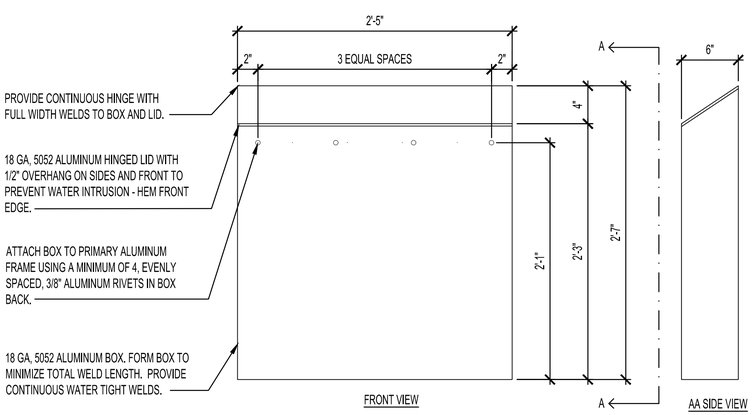


## A1 ALUMINUM BOX

SCALE: 1 1/2"=1'-0"

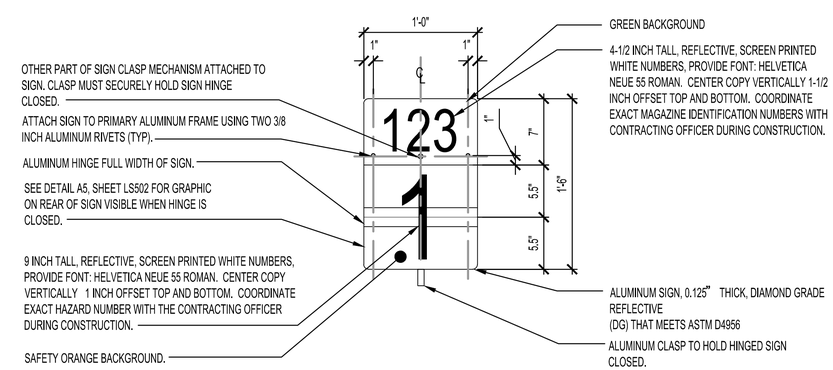


## A3 MAGAZINE HAZARD SIGN

SCALE: 1 1/2"=1'-0"

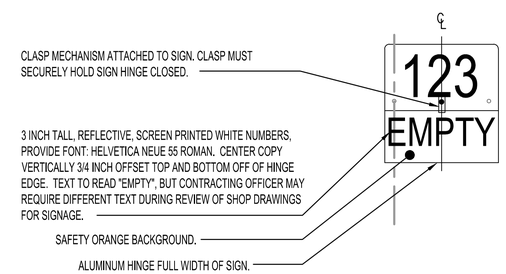


## A5 MAGAZINE HAZARD SIGN, CLOSED HINGE GRAPHIC

SCALE: 1 1/2"=1'-0"

## GRAPHIC SCALE

1/2"=1'-0" 0' 1' 2' 4'

1-1/2"=1'-0" 0 6" 1' 1'-6"

| MARK | DESCRIPTION | DATE |
|---|---|---|

NAVFAC

SEAL

A/E INFO

APPROVED
(Name of Approving Official)
FOR COMMANDER NAVFAC

ACTIVITY
Approved by LCDR VINCE DEL GRECO, ROICC with PWD YORKTOWN, via Email.

SATISFACTORY TO DATE 03/26/2026

DES WLS | DRW MLB | CHK ADT

PM/DM MME/WJW

BRANCH MANAGER DLB

CHIEF ENG/ARCH JWJ

FIRE PROTECTION HPN

DEPARTMENT OF THE NAVY
NAVAL FACILITIES ENGINEERING SYSTEMS COMMAND
MIDLANT POC CORE

NAVAL FACILITIES ENGINEERING SYSTEMS COMMAND
NAVAL STATION NORFOLK, VIRGINIA

NAVAL WEAPONS STATION
YORKTOWN, VIRGINIA

P-171 WEAPONS MAGAZINES

SIGNAGE DETAILS

SCALE: AS SHOWN

EPROJECT NO.: 1737010

CONSTR. CONTR. NO. ##

NAVFAC DRAWING NO. 12941936

SHEET 282 OF 499

LS502

DRAWFORM REVISION: 14 SEP 2023

FILE NAME: K:\VA\Yorktown\MILCON\2024_1737010_P171_Weapons_Magazines\B_Design\DWGS – MAGAZINE\Sheet\06_LA\P171-1737010-DETL-SIGN-LS502.dwg LAYOUT NAME: LS502 PLOTTED: Tuesday, March 31, 2026 – 9:08pm USER: mary.blemler

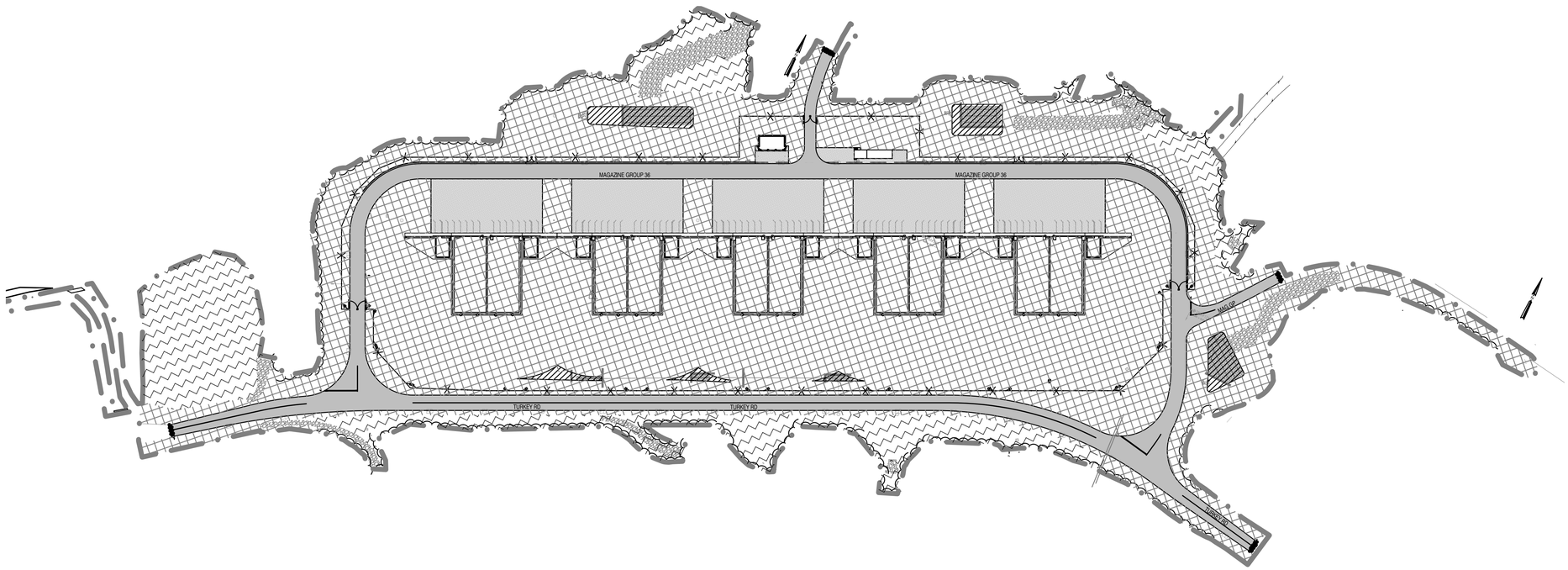


KEY PLAN

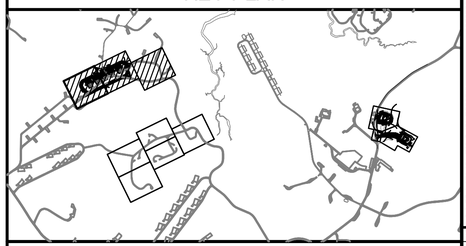

GRAPHIC SCALE

1"=100' 0' 100' 200'

| MARK | DESCRIPTION | DATE |
|---|---|---|

SEAL

A/E INFO

APPROVED
DENNIS L. BRANCH, P.E.
FOR COMMANDER NAVFAC

ACTIVITY
Approved by LCDR VINCE DEL GRECO, ROICC with PWD YORKTOWN, via Email.
SATISFACTORY TO DATE 03/26/2026

DES WLS | DRW MLB | CHK ADT
PM/DM MME/WJW
BRANCH MANAGER DLB
CHIEF ENG/ARCH JWJ
FIRE PROTECTION HPN

DEPARTMENT OF THE NAVY
NAVAL FACILITIES ENGINEERING SYSTEMS COMMAND
MIDLANT PDC CORE
NAVAL FACILITIES ENGINEERING SYSTEMS COMMAND
NAVAL STATION NORFOLK, VIRGINIA
NAVAL WEAPONS STATION
YORKTOWN, VIRGINIA
P-171 WEAPONS MAGAZINES
TOPSOIL MANAGEMENT PLAN - MAGAZINE

SCALE: AS SHOWN
EPROJECT NO.: 1737010
CONSTR. CONTR. NO. ##
NAVFAC DRAWING NO. 12941937
SHEET 283 OF 499

L-701

DRAWFORM REVISION: 14 SEP 2023

FILE NAME: K:\YA\Yorktown\MILCON\2204_1737010_P171_Weapons_Magazines\B_Design\DWGS - MAGAZINE\Sheet\06_LAP171-1737010-SOIL-MAGS-L-701.dwg LAYOUT NAME: L-701 PLOTTED: Tuesday, March 31, 2026 - 2:37pm USER: sarah.m.turner

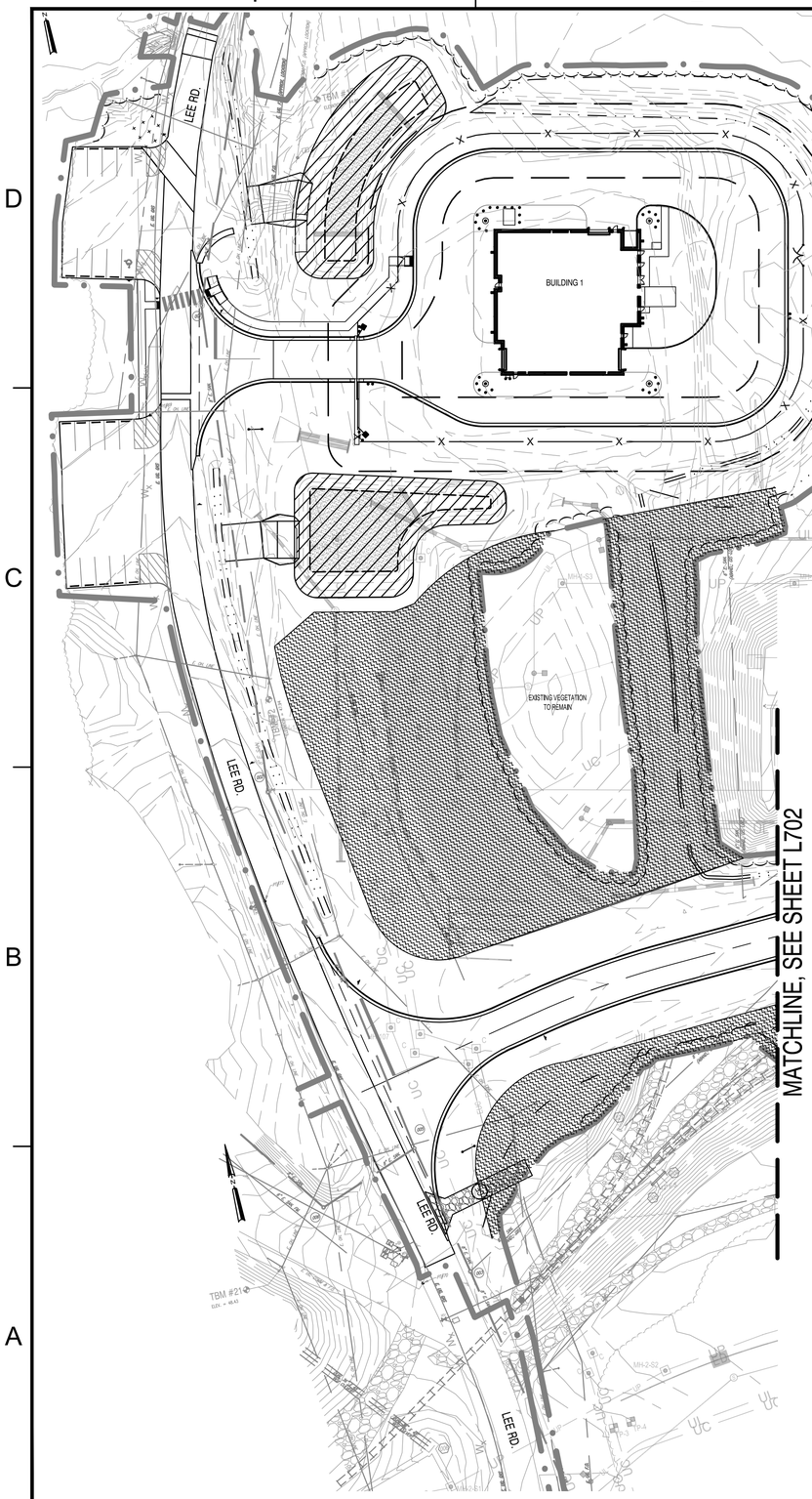


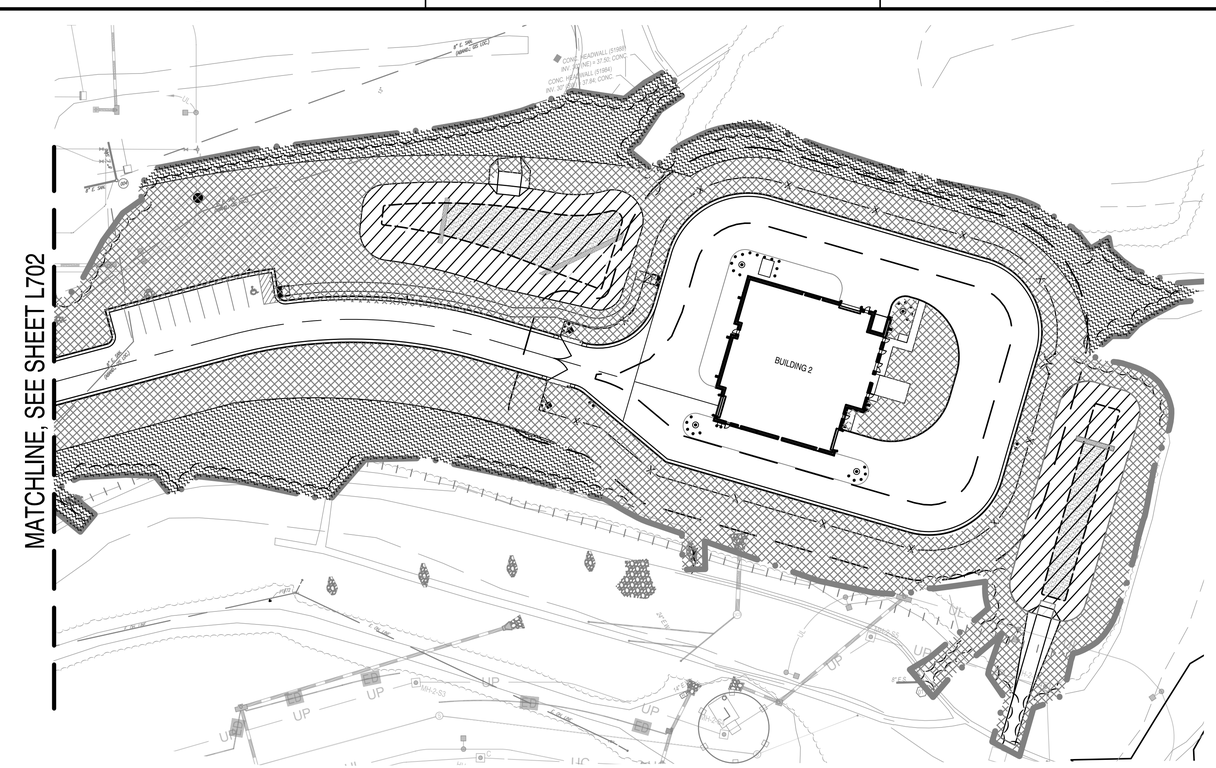


## KEY PLAN

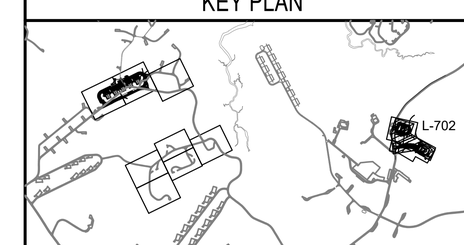


## GRAPHIC SCALE

1"=50' 0' 50' 100'

| MARK | DESCRIPTION | DATE |
|---|---|---|

NAVFAC

SEAL

A/E INFO

APPROVED
James E. Donahue, R.A.
FOR COMMANDER NAVFAC

ACTIVITY
Approved by LCDR VINCE DEL GRECO, ROICC with PWD YORKTOWN, via Email.
SATISFACTORY TO DATE 03/26/2026

| DES | WLS | DRW | MLB | CHK | ADT |
|---|---|---|---|---|---|
| PM/DM | MME/WJW | | | | |
| BRANCH MANAGER | DLB | | | | |
| CHIEF ENG/ARCH | JWJ | | | | |
| FIRE PROTECTION | HPN | | | | |

DEPARTMENT OF THE NAVY
NAVAL FACILITIES ENGINEERING SYSTEMS COMMAND
MIDLANT PDC CORE

NAVAL FACILITIES ENGINEERING SYSTEMS COMMAND
NAVAL STATION NORFOLK, VIRGINIA

NAVAL WEAPONS STATION
YORKTOWN, VIRGINIA

P-171 WEAPONS MAGAZINES

TOPSOIL MANAGEMENT PLAN - SEGREGATION FACILITIES

SCALE: AS SHOWN
EPROJECT NO.: 1737010
CONSTR. CONTR. NO.: ##
NAVFAC DRAWING NO.: 12941938
SHEET 284 OF 499

L-702

DRAWFORM REVISION: 14 SEP 2023

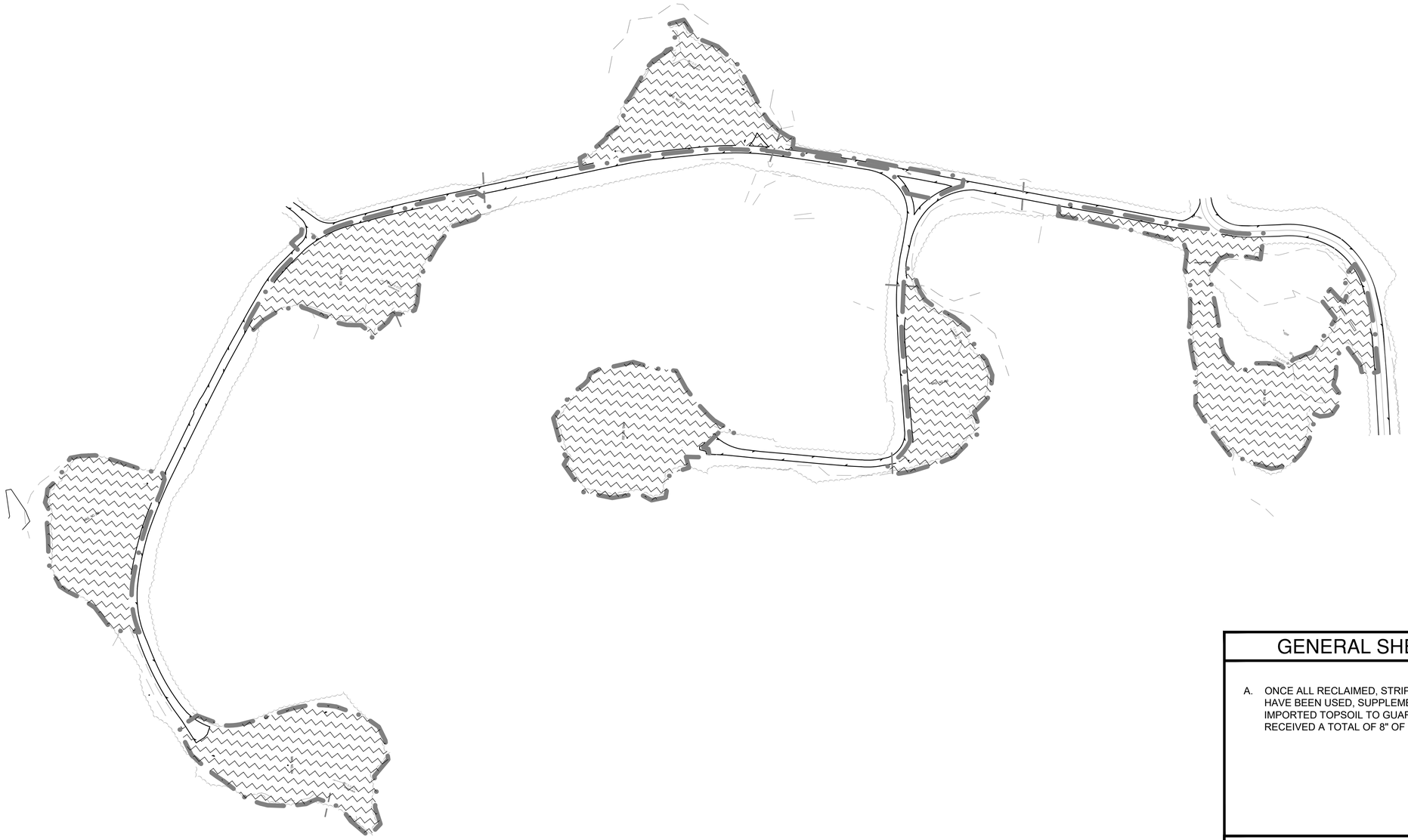

## GENERAL SHEET NOTES

A. ONCE ALL RECLAIMED, STRIPPED, SURFACE SOILS HAVE BEEN USED, SUPPLEMENT AS NECESSARY WITH IMPORTED TOPSOIL TO GUARANTEE ALL AREAS HAVE RECEIVED A TOTAL OF 8" OF SOIL UPON COMPLETION.

## KEY PLAN

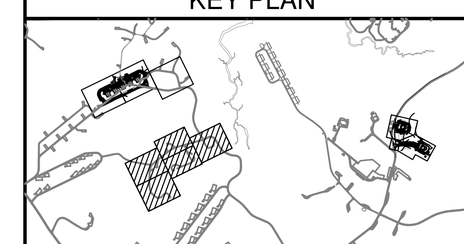

## GRAPHIC SCALE

1"=100' 0' 100' 200'

| MARK | DESCRIPTION | DATE |
|---|---|---|

SEAL

A/E INFO

APPROVED
James E. Delahaye, P.E.

FOR COMMANDER NAVFAC

ACTIVITY
Approved by LCDR VINCE DEL GRECO, ROICC with PWD YORKTOWN, via Email.

SATISFACTORY TO DATE 03/26/2026

DES WLS DRW MLB CHK ADT

PM/DM MME/WJW

BRANCH MANAGER DLB

CHIEF ENG/ARCH JWJ

FIRE PROTECTION HPN

DEPARTMENT OF THE NAVY
NAVAL FACILITIES ENGINEERING SYSTEMS COMMAND
MIDLANT PDC CORE

NAVAL FACILITIES ENGINEERING SYSTEMS COMMAND
NAVAL STATION NORFOLK, VIRGINIA

NAVAL WEAPONS STATION
YORKTOWN, VIRGINIA

P-171 WEAPONS MAGAZINES

TOPSOIL MANAGEMENT PLAN - DEMOLITION SITE

SCALE: AS SHOWN

EPROJECT NO.: 1737010

CONSTR. CONTR. NO. ##

NAVFAC DRAWING NO. 12941939

SHEET 285 OF 499

L-703

DRAWFORM REVISION: 14 SEP 2023

FILE NAME: K:\AI\Yorktown\MILCON\2024_1737010_P171_Weapons_Magazines\B_Design\DWGS - MAGAZINE\Sheet\06_LAP171-1737010-SOIL-DEMO-L-703.dwg PLOTTED: Tuesday, March 31, 2026 2:39:38 PM USER: mary.jklemler

## GENERAL SITE LEGEND

- STANDARD MAGAZINE DESIGN KEY NOTE
- POINT OF CONNECTION NEW TO EXISTING
- FEEDER DESIGNATION ID FOR FEEDER SCHEDULE, SHEET ES601.

## EXTERIOR SITE ELECTRICAL LEGEND

| | |
|---|---|
| UP | UNDERGROUND 13.2 kV PRIMARY LINE |
| US | UNDERGROUND 208Y/120V SECONDARY LINE |
| EUP | EXISTING UNDERGROUND PRIMARY LINE |
| EOP | EXISTING OVERHEAD PRIMARY LINE |
| EUC | EXISTING UNDERGROUND TELECOM LINE |
| EOC | EXISTING OVERHEAD TELECOM LINE |
| OHP | OVERHEAD 13.2 kV PRIMARY UTILITY LINE |
| UL | UNDERGROUND LIGHTING CIRCUIT, 2#10, 1#10G, 1"C, UON. |
| UC | UNDERGROUND TELECOM LINE |
| UGE | EXISTING UNDERGROUND ELECTRICAL LINE |
| EUC | DEMOLISH EXISTING UNDERGROUND TELECOM LINE |
| EX1 | EXTERIOR LIGHTING FIXTURE TYPE. SEE EXTERIOR LIGHTING FIXTURE SCHEDULE ON SHEET ES503. |
| | AREA/STREET LIGHTING POLE WITH LUMINAIRE |
| | POWER POLE (HEIGHT AND CLASS AS INDICATED). |
| | EXISTING POWER POLE (HEIGHT AND CLASS AS INDICATED). |
| | REMOVE POWER POLE (HEIGHT AND CLASS AS INDICATED). |
| | EXISTING MANHOLE/HANDHOLE, TYPE AS NOTED, "MH#" INDICATES MANHOLE NUMBER. "HH" INDICATES HANDHOLE NUMBER. |
| MH | POWER MANHOLE, TYPE 2, SEE DETAIL "UG-1" ON ES502. "MH#" INDICATES MANHOLE NUMBER. |
| HH C | COMMUNICATIONS HANDHOLE, TYPE 8, SEE DETAIL "UG-6" ON ES502. "HH#" INDICATES HANDHOLE NUMBER. SUBSCRIPT "C" INDICATES COMMUNICATION HANDHOLE. |
| | PADMOUNT TRANSFORMER. SIZE AS INDICATED. FILLED RECTANGLE INDICATES FRONT. |
| | PADMOUNT TRANSFORMER. EXISTING. SIZE AS INDICATED. UNFILLED LOWER RECTANGLE INDICATES FRONT. |
| | PADMOUNT SECTIONALIZER SWITCH. 15KV, 4 WAY, 600 AMP. SWITCHWAYS AS INDICATED. |
| 1 X A | NEW CABLE DESIGNATION (TYPICAL) DESCRIPTION PER DUCTBANK SCHEDULE - POWER, SHEET ES601<br>DUCTBANK SECTION LOOKING IN DIRECTION OF ARROWS<br>SPARE 4" DUCT WITH PULLSTRING (TYPICAL)<br>HEAVY LINE INDICATES BOTTOM OF DUCT.<br>NEW COMMUNICATIONS CABLE DESIGNATION (TYPICAL) DESCRIPTION PER DUCTBANK SCHEDULE - COMMUNICAITONS, SHEET ES601<br>OCCUPIED DUCT, EXISTING CABLE |
| J | JUNCTION BOX. |
| E | EQUIPMENT CONNECTION |
| | ELECTRICAL PANELBOARD (120/208 VOLT). |
| | ELECTRICAL PANELBOARD (277/480 VOLT). |
| SPD | SURGE PROTECTIVE DEVICE |
| OR | INDICATES 3/4" CONDUIT UON. NO TICK MARKS INDICATE 2 #12 CONDUCTORS & 1 #12 GND. TICK MARKS, WHEN SHOWN, INDICATE NUMBER OF #12 CONDUCTORS IF OTHER THAN THREE; (7) INDICATES GROUND. |
| P1-1,3,5 | HOMERUNS TO PANEL. PANEL & CIRCUIT DESIGNATIONS AS INDICATED. |
| | GROUND ELECTRODE CONDUCTOR. |
| | NON-FUSED DISCONNECT SWITCH |

## ABBREVIATIONS

| | |
|---|---|
| A | AMPERES |
| AFF | ABOVE FINISHED FLOOR |
| AFG | ABOVE FINISHED GRADE |
| AWG | AMERICAN WIRE GAUGE |
| BET | BUILDING ENTRANCE TERMINALS |
| C | CONDUIT |
| COND | CONDUIT |
| CL | CENTERLINE |
| CU | COPPER |
| DWG | DRAWING |
| ECM | EARTH COVERED MAGAZINE |
| EBR | ENCASED BURIAL |
| FA | FIRE ALARM |
| FDC | FIBER DISTRIBUTION CABINET |
| FO | FIBER OPTIC |
| FOC | FIBER OPTIC CABLE |
| FT | FOOT |
| FTTx | FIBER TO THE x, x IS SYSTEM TYPE (H: HOME, P: PREMISE, ETCETERA) |
| GFI | GROUND FAULT INTERRUPTER |
| GND | GROUND |
| HD | HEAVY DUTY |
| HID | HIGH INTENSITY DISCHARGE |
| HT | HEIGHT |
| IDS | INTRUSION DETECTION SYSTEM |
| J | JUNCTION BOX |
| LS | LIMIT SWITCH |
| MIN | MINIMUM |
| MOS | MULTI-OCCUPANCY SENSOR |
| MTG | MOUNTING |
| MV | MEDIUM VOLTAGE |
| NOSSA | NAVAL ORDNANCE SAFETY AND SECURITY ACTIVITY |
| NTS OR N.T.S. | NOT TO SCALE |
| OSP | OUTSIDE PLANT |
| PNL | PANEL |
| PVC | POLYVINYL CHLORIDE |
| RGS | RIGID GALVANIZED STEEL |
| SE | SERVICE ENTRANCE |
| SM | SINGLE MODE |
| SPD | SURGE PROTECTION DEVICE |
| SPGB | SINGLE POINT GROUND BAR |
| SS | STAINLESS STEEL |
| TEL | TELEPHONE |
| TELECOM | TELECOMMUNICATION |
| TVSS | TRANSIENT VOLTAGE SURGE SUPPRESSOR |
| TYP | TYPICAL |
| V | VOLTS |
| VAC | VOLTS ALTERNATING CURRENT |
| UON | UNLESS OTHERWISE NOTED |
| W | WIRE |
| WP | WEATHERPROOF EQUIPMENT |
| XFMR | TRANSFORMER |

## GENERAL SITE NOTES

1. UNLESS OTHERWISE INDICATED, ALL ELECTRICAL WORK AND MATERIAL IS NEW AND CONTRACTOR PROVIDED.
2. PROVIDE SURGE PROTECTION FOR ALL CONDUCTORS (ENTERING AND EXITING THE MAGAZINE) IN ACCORDANCE WITH NFPA 780. CONNECT ALL SURGE PROTECTION GROUNDING CONDUCTORS TO THE SECONDARY GROUND RING.
3. THE MAGAZINE SPACES HAVE BEEN DETERMINED TO NOT BE A HAZARDOUS (CLASSIFIED) LOCATION.
4. PROVIDE RGS CONDUIT FOR ALL CONDUIT ENTERING AND INSIDE OF THE MAGAZINE.
5. ALL INTERIOR EQUIPMENT MUST HAVE ENCLOSURES RATED NEMA 3R, AND ALL EXTERIOR EQUIPMENT MUST HAVE STAINLESS STEEL ENCLOSURES RATED NEMA 4X, UNLESS OTHERWISE NOTED
6. THE MAGAZINE IS CONSTRUCTED AS A TYPE OF FARADAY CAGE TO PROTECT THE CONTENTS FROM LIGHTNING ENERGY. ALL WALL AND CONSTRUCTION JOINTS MUST BE ELECTRICALLY BONDED.
7. POWER AND METALLIC COMMUNICATION/DATA LINES MUST ENTER THE FACILITY IN RIGID METAL CONDUIT RUN UNDERGROUND. THE RIGID METAL CONDUIT MUST EXTEND A MIN. OF 50'-0" FROM ECM BEFORE TRANSITIONING TO PVC. IN THE EVENT A HANDHOLE LOCATION FALLS WITHIN THE 50'-0" DISTANCE, PROVIDE A #2/0 COPPER BONDING JUMPER BETWEEN THE CONDUITS ENTERING AND EXITING THE HANDHOLE. BOND RGS CONDUIT TO SECONDARY GROUND GIRDLE WHERE IT CROSSES. ROUTE CONDUIT SO THAT IT CROSSES THE SECONDARY GROUND GIRDLE AT RIGHT ANGLES, WHERE POSSIBLE. ENCASE ALL UNDERGROUND RGS CONDUIT IN CONCRETE.
8. WHEN ROADWAYS/PAVEMENT MUST BE CUT TO RUN UTILITIES REFER TO PAVEMENT PATCH DETAIL A2/CS511.

| MARK | DESCRIPTION | DATE |
|---|---|---|

SEAL

A/E INFO

APPROVED
James E. Donahue, R.A.
FOR COMMANDER NAVFAC

ACTIVITY
Approved by LCDR VINCE DEL GRECO, ROICC with PWD YORKTOWN, via Email.
SATISFACTORY TO DATE 03/26/2026

| | | | |
|---|---|---|---|
| DES CPO | DRW CPO | CHK | JDU |
| PM/DM | MME/WJW | | |
| BRANCH MANAGER | WRB | | |
| CHIEF ENG/ARCH | JWJ | | |
| FIRE PROTECTION | HPN | | |

DEPARTMENT OF THE NAVY
NAVAL FACILITIES ENGINEERING SYSTEMS COMMAND
MIDLANT PDC CORE
NAVAL FACILITIES ENGINEERING SYSTEMS COMMAND
NAVAL STATION NORFOLK, VIRGINIA
NAVAL WEAPONS STATION
YORKTOWN, VIRGINIA
P-171 WEAPONS MAGAZINES
EXTERIOR SITE ELECTRICAL LEGEND

SCALE: NONE
EPROJECT NO.: 1737010
CONSTR. CONTR. NO. ##
NAVFAC DRAWING NO. 12941942
SHEET 286 OF 499

ES001

DRAWFORM REVISION: 14 SEP 2023

FILE NAME: K:\VA\Yorktown\MILCON\2204_1737010_P171_Weapons_Magazines\B_Design\DWGS - MAGAZINE\Sheet\13_ELEC\P171-1737010-ES001.dwg LAYOUT NAME: E-001 EXTERIOR SITE ELECTRICAL LEGEND PLOTTED: Tuesday, March 31, 2026 - 7:10am USER: dayton.obrien

## GENERAL SHEET NOTES

A. LOCATE AND MARK ALL EXISTING UNDERGROUND UTILITIES PRIOR TO EXCAVATION. CONTRACTOR TO EXERCISE EXTREME CAUTION TO PREVENT DAMAGE TO EXISTING UTILITIES AND TO PROVIDE MINIMUM CLEARANCE AND COVER.

B. EXERCISE CAUTION WHEN EXCAVATING IN VICINITY OF ELECTRICAL OR COMMUNICATIONS CIRCUITS, CONDUCTORS, CABLING, AND RACEWAYS. IMMEDIATELY NOTIFY CONTRACTING OFFICER OF ANY DAMAGE DONE TO ELECTRICAL OR COMMUNICATION SYSTEMS DURING EXCAVATION AND REPAIR.

C. PRESERVE SURVEY CONTROL POINTS AND RESET ANY CONTROLS DESTROYED OR DISTURBED DUE TO WORK PERFORMED AROUND SURVEY CONTROL POINTS AT NO COST TO THE GOVERNMENT.

D. FIELD VERIFY LOCATION OF EXISTING TELECOM AND FIBER PEDESTALS.

E. COORDINATE WITH BASE COMMUNICATIONS OFFICER BEFORE DEMOLISHING COMMUNICATIONS CABLING.

## KEYNOTES

1. DEMOLISH/REROUTE EXISTING COMMUNICATIONS CABLING AS INDICATED TO AVOID ISSUES WITH GRADING IN THIS AREA. SEE SHEETS ES107-ES109 FOR SPLICING AND REROUTING OF EXISTING COMMUNICATIONS CABLING TO NEW HANDHOLES.

2. DEMOLISH EXISTING COMMUNICATIONS HANDHOLE. EXISTING CONNECTIONS AND CABLING MUST BE MOVED TO NEW HANDHOLES. SEE SHEETS ES107-ES109 FOR SPLICING AND REROUTING OF EXISTING COMMUNICATIONS CABLING TO NEW HANDHOLES.

## KEY PLAN

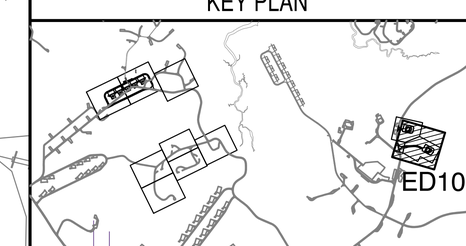


## GRAPHIC SCALE

1"=50' 0' 50' 100'

| MARK | DESCRIPTION | DATE |
|---|---|---|

SEAL

A/E INFO

APPROVED
DAVID A. BRAUN, P.E.
FOR COMMANDER NAVFAC

ACTIVITY
Approved by LCDR VINCE DEL GRECO, ROICC with PWD YORKTOWN, via Email.
SATISFACTORY TO DATE 03/26/2026

| DES | CPO | DRW | CPO | CHK | JDJ |
|---|---|---|---|---|---|

| | |
|---|---|
| PM/DM | MME/WJW |
| BRANCH MANAGER | WRB |
| CHIEF ENG/ARCH | JWJ |
| FIRE PROTECTION | HPN |

DEPARTMENT OF THE NAVY
NAVAL FACILITIES ENGINEERING SYSTEMS COMMAND
MIDLANT PDC CORE

NAVAL FACILITIES ENGINEERING SYSTEMS COMMAND
NAVAL STATION NORFOLK, VIRGINIA

NAVAL WEAPONS STATION
YORKTOWN, VIRGINIA

P-171 WEAPONS MAGAZINES

DEMOLITION PLAN - SEGREGATION FACILITIES

| | |
|---|---|
| SCALE: | AS SHOWN |
| EPROJECT NO. | 1737010 |
| CONSTR. CONTR. NO. | ## |
| NAVFAC DRAWING NO. | 12941943 |
| SHEET | 287 OF 499 |

ED101

DRAWFORM REVISION: 14 SEP 2023

FILE NAME: K:\IA\Yorktown\MILCON\2024_1737010_P171_Weapons_Magazines\B_Design\DWGS - MAGAZINE\Sheet\13_ELEC\P171-1737010-ED101.dwg LAYOUT NAME: ED101 DEMOLITION PLAN - SEGREGATION FACILITIES PLOTTED: Tuesday, March 31, 2026 - 7:11am USER: dayton.obrien

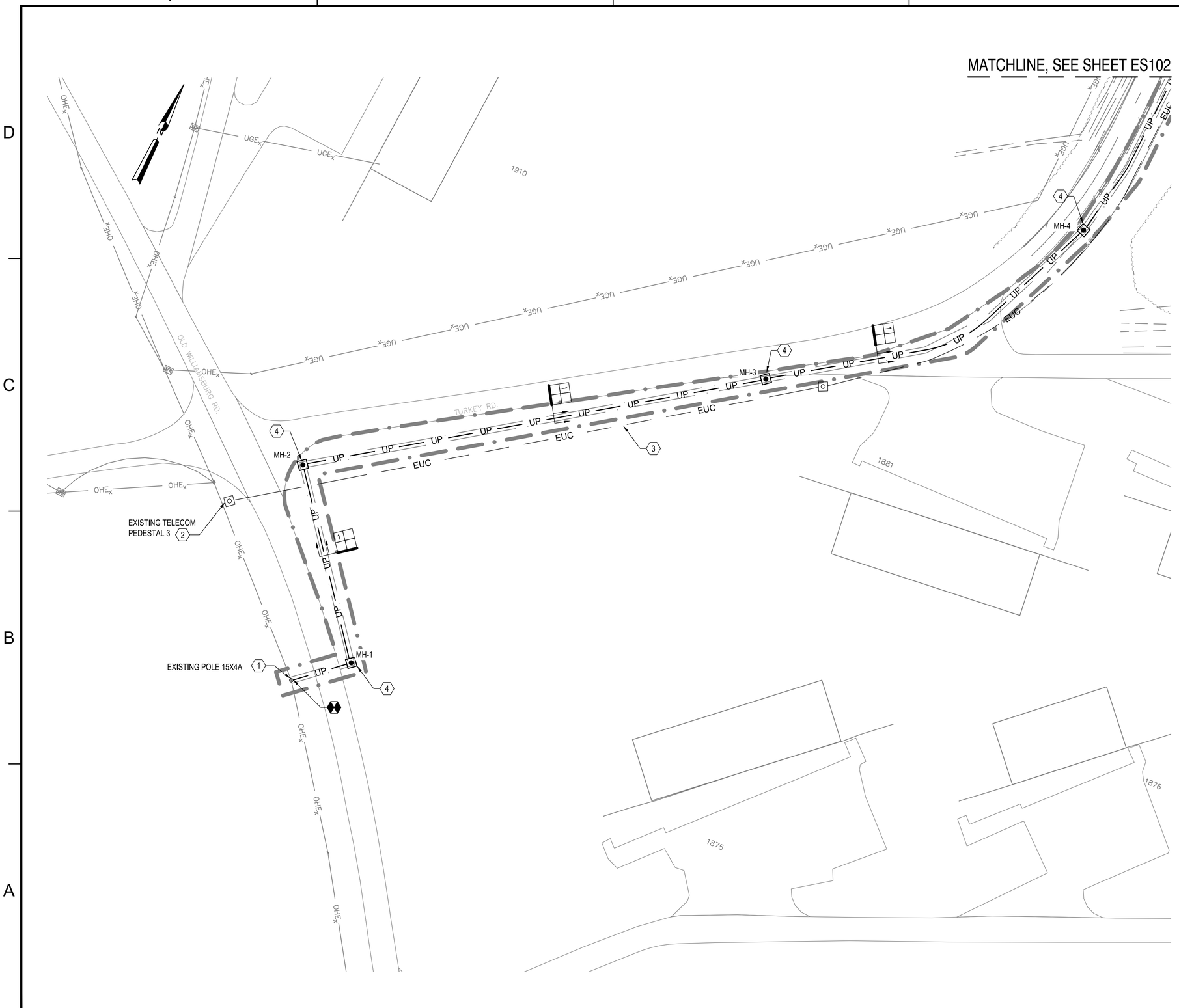


## GENERAL SHEET NOTES

A. LOCATE AND MARK ALL EXISTING UNDERGROUND UTILITIES PRIOR TO EXCAVATION. EXERCISE EXTREME CAUTION TO PREVENT DAMAGE TO EXISTING UTILITIES AND TO PROVIDE MINIMUM CLEARANCE AND COVER.

B. EXERCISE CAUTION WHEN EXCAVATING IN VICINITY OF ELECTRICAL OR COMMUNICATIONS CIRCUITS, CONDUCTORS, CABLING, AND RACEWAYS. IMMEDIATELY NOTIFY CONTRACTING OFFICER OF ANY DAMAGE DONE TO ELECTRICAL OR COMMUNICATION SYSTEMS DURING EXCAVATION AND REPAIR.

C. PRESERVE SURVEY CONTROL POINTS AND RESET ANY CONTROLS DESTROYED OR DISTURBED DUE TO WORK PERFORMED AROUND SURVEY CONTROL POINTS AT NO COST TO THE GOVERNMENT.

D. FIELD VERIFY LOCATION OF EXISTING TELECOM AND FIBER PEDESTALS.

E. PROVIDE SCHEDULE 40 PVC RACEWAYS DIRECT BURIED WITH MIN. 18" COVER IN UNPAVED AREAS FOR SECONDARY ELECTRICAL AND TELECOMMUNICATION DUCTS.

F. MV DUCTBANKS AND SECONDARY ELECTRICAL/COMMUNICATIONS DUCTS RUN UNDER ROADS AND STRUCTURES MUST BE CONCRETE-ENCASED. FOR ALL OTHER CONDUIT RUNS, PROVIDE COVER DEPTHS AS SPECIFIED IN SPECIFICATION 33 71 02.

G. WHERE UNDERGROUND ELECTRICAL AND TELECOMMUNICATION DUCTS CROSS STORM WATER PIPING, RUN DUCTS ABOVE STORM WATER PIPING, UON. PROVIDE MIN. 6" VERTICAL CLEARANCE BETWEEN DUCTS AND STORM WATER PIPING.

H. PROVIDE UNDERGROUND CABLE MARKERS EVERY 500' AND AT BOTH SIDE OF ROAD CROSSINGS ALONG LENGTH OF F.O. RUN. SEE DETAIL A4 ON ES501.

## KEYNOTES

1. PROVIDE GANG OPERATED SWITCH TO CONNECT TO EXISTING OVERHEAD POWER LINE AND TRANSITION TO UNDERGROUND DUCTBANK. BOND THE GROUNDED NEUTRAL TO THE GROUNDING ELECTRODE SYSTEM AT THE POLE. SEE POLE DETAILS ON ES501 FOR ADDITION INFORMATION AND GANG OPERATED SWITCH DETAILS ON ES507.
2. PROVIDE FDC EQUIPPED WITH 144 SC CONNECTORS AND MOUNT INSIDE PEDESTAL. CONNECT 144 SM FIBER CABLE TO FDC.
3. PROVIDE 144 STRAND SM FIBER OPTIC CABLE IN EXISTING CONDUIT.
4. PROVIDE TYPE 2 ELECTRICAL MANHOLE, SEE DETAIL UG-1 ON SHEET ES502.

## KEYPLAN

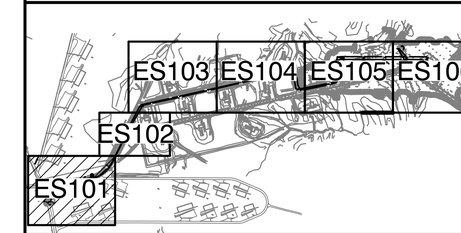


## GRAPHIC SCALE

1"=40' 0' 40' 80'

| MARK | DESCRIPTION | DATE |
|---|---|---|

SEAL

A/E INFO

APPROVED
DENNIS J. CARLSON, P.E.
FOR COMMANDER NAVFAC

ACTIVITY
Approved by LCDR VINCE DEL GRECO, ROICC with PWD YORKTOWN, via Email.
SATISFACTORY TO DATE 03/26/2026

| | | | |
|---|---|---|---|
| DES | CPO | DRW CPO | CHK JDJ |
| PM/DM | MME/WJW | | |
| BRANCH MANAGER | WRB | | |
| CHIEF ENG/ARCH | JWJ | | |
| FIRE PROTECTION | HPN | | |

DEPARTMENT OF THE NAVY
NAVAL FACILITIES ENGINEERING SYSTEMS COMMAND
MIDLANT PDC CORE

NAVAL FACILITIES ENGINEERING SYSTEMS COMMAND
NAVAL STATION NORFOLK, VIRGINIA

NAVAL WEAPONS STATION
YORKTOWN, VIRGINIA

P-171 WEAPONS MAGAZINES

ELECTRICAL SITE PLAN - MAGAZINE

SCALE: AS SHOWN
EPROJECT NO.: 1737010
CONSTR. CONTR. NO. ##
NAVFAC DRAWING NO. 12941944
SHEET 288 OF 499

ES101

DRAWFORM REVISION: 14 SEP 2023

FILE NAME: K:\NAVYorktown\MILCON\2024_1737010_P171_Weapons_Magazines\B_Design\DWGS - MAGAZINE\Sheet13_ELEC\P171-1737010-ES101.dwg LAYOUT NAME: ES101 ELECTRICAL SITE PLAN - MAGAZINE PLOTTED: Tuesday, March 31, 2026 - 7:11am USER: dayton.obrien

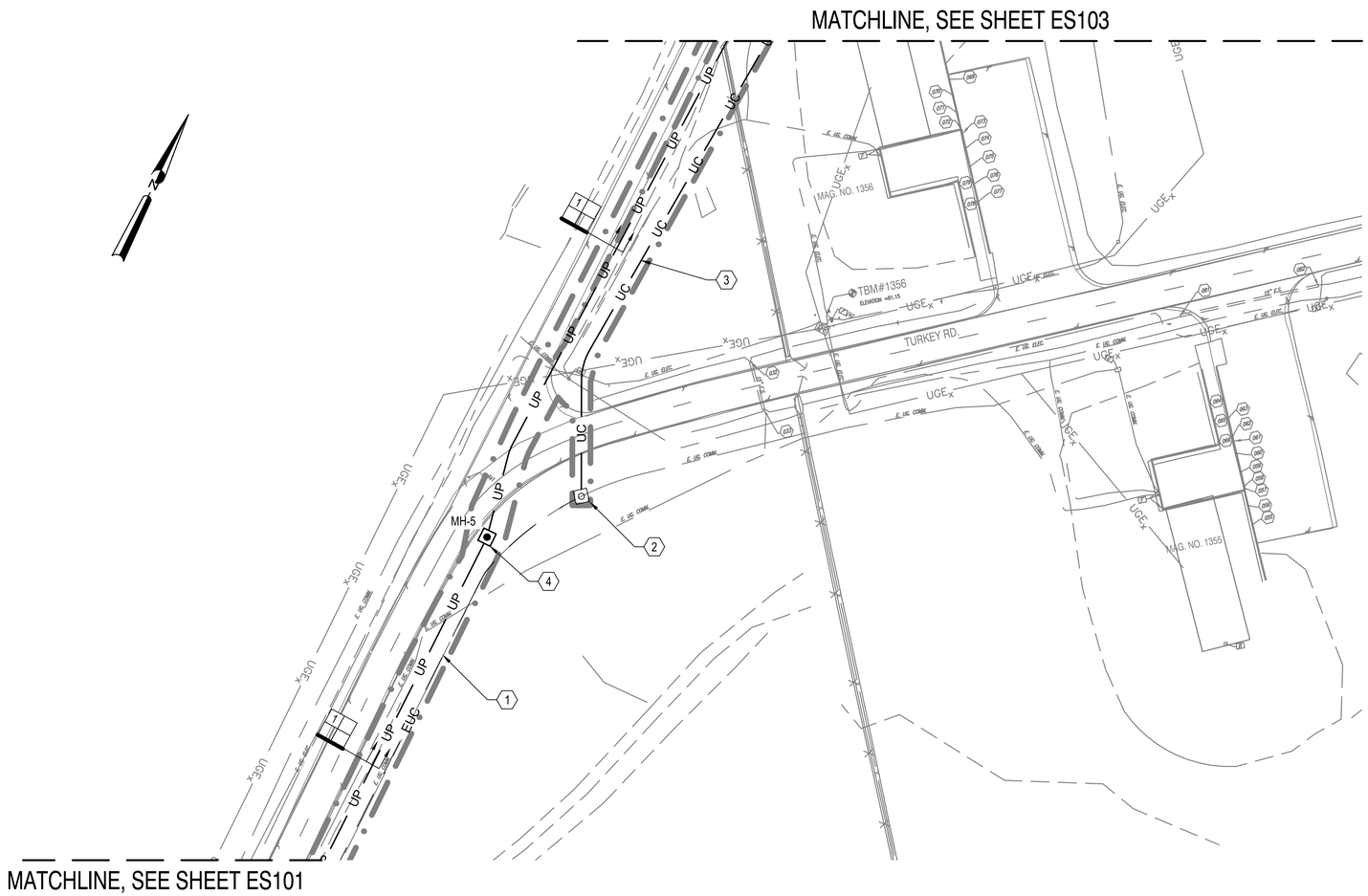


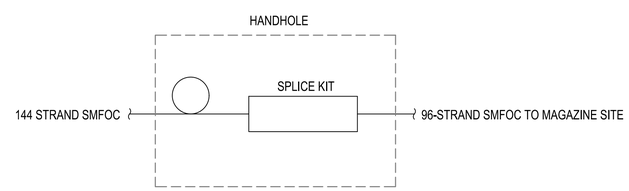


**A3 TYPICAL HANDHOLE SPLICE DETAIL**

NOT TO SCALE

## GENERAL SHEET NOTES

A. LOCATE AND MARK ALL EXISTING UNDERGROUND UTILITIES PRIOR TO EXCAVATION. EXERCISE EXTREME CAUTION TO PREVENT DAMAGE TO EXISTING UTILITIES AND TO PROVIDE MINIMUM CLEARANCE AND COVER.

B. EXERCISE CAUTION WHEN EXCAVATING IN VICINITY OF ELECTRICAL OR COMMUNICATIONS CIRCUITS, CONDUCTORS, CABLING, AND RACEWAYS. IMMEDIATELY NOTIFY CONTRACTING OFFICER OF ANY DAMAGE DONE TO ELECTRICAL OR COMMUNICATION SYSTEMS DURING EXCAVATION AND REPAIR.

C. PRESERVE SURVEY CONTROL POINTS AND RESET ANY CONTROLS DESTROYED OR DISTURBED DUE TO WORK PERFORMED AROUND SURVEY CONTROL POINTS AT NO COST TO THE GOVERNMENT.

D. FIELD VERIFY LOCATION OF EXISTING TELECOM AND FIBER PEDESTALS.

E. PROVIDE SCHEDULE 40 PVC RACEWAYS DIRECT BURIED WITH MIN. 18" COVER IN UNPAVED AREAS FOR SECONDARY ELECTRICAL AND TELECOMMUNICATION DUCTS.

F. MV DUCTBANKS AND SECONDARY ELECTRICAL/COMMUNICATIONS DUCTS RUN UNDER ROADS AND STRUCTURES MUST BE CONCRETE-ENCASED. FOR ALL OTHER CONDUIT RUNS, PROVIDE COVER DEPTHS AS SPECIFIED IN SPECIFICATION 33 71 02.

G. WHERE UNDERGROUND ELECTRICAL AND TELECOMMUNICATION DUCTS CROSS STORM WATER PIPING, RUN DUCTS ABOVE STORM WATER PIPING, UON. PROVIDE MIN. 6" VERTICAL CLEARANCE BETWEEN DUCTS AND STORM WATER PIPING.

H. PROVIDE UNDERGROUND CABLE MARKERS EVERY 500' AND AT BOTH SIDE OF ROAD CROSSINGS ALONG LENGTH OF F.O. RUN. SEE DETAIL A4 ON ES501.

I. COORDINATE WITH NAVY MUNITIONS COMMAND TO OBTAIN ACCESS TO THE RESTRICTED AREA AROUND MAGAZINE GROUP #14. CONTACT NMC TO HAVE THE GATES UNLOCKED ON A DAILY BASIS, AND SECURE THE GATES AT THE END OF THE DAY ON WEEKDAYS. ACCESS IS RESTRICTED DURING ORDNANCE MOVEMENTS.

J. USE EXTREME CAUTION TO AVOID DAMAGE TO THE EXISTING SECURITY FENCING. RESTORE FENCE TO EXISTING CONDITION, INCLUDING AGGREGATE EMBEDMENT OF THE FABRIC.

## KEYNOTES

1. PROVIDE 144-STRAND SM FIBER OPTIC CABLE IN EXISTING CONDUIT.
2. COIL 100' OF FIBER OPTIC CABLE IN HANDHOLE. EXTEND 96-STRAND SM FIBER OPTIC CABLES TO MAGAZINE SITE. LEAVE 48 STRANDS DARK AND PROTECT FOR LATER USE. SEE DETAIL A3/ES102.
3. PROVIDE 4" DIRECT BURIED PVC CONDUIT CONTAINING (1) 1" INNERDUCT CONTAINING 96-STRAND SM FIBER OPTIC CABLE, AND (2) 1" SPARE INNERDUCT EACH WITH PULL STRING. PROVIDE 3" WIDE DETECTABLE TAPE 6" BELOW FINISHED GRADE.
4. PROVIDE TYPE 2 ELECTRICAL MANHOLE, SEE DETAIL UG-1 ON SHEET ES502.

## KEYPLAN

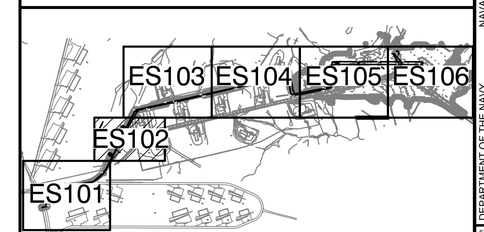


## GRAPHIC SCALE

1"=40' 0' 40' 80'

| MARK | DESCRIPTION | DATE |
|---|---|---|

SEAL

A/E INFO

APPROVED
James E. Donahue, R.A.
FOR COMMANDER NAVFAC

ACTIVITY
Approved by LCDR VINCE DEL GRECO, ROICC with PWD YORKTOWN, via Email.
SATISFACTORY TO DATE 03/26/2026

DES CPO | DRW CPO | CHK JDU
PM/DM MME/WJW
BRANCH MANAGER WRB
CHIEF ENG/ARCH JWJ
FIRE PROTECTION HPN

DEPARTMENT OF THE NAVY
NAVAL FACILITIES ENGINEERING SYSTEMS COMMAND
MIDLANT PDC CORE
NAVAL FACILITIES ENGINEERING SYSTEMS COMMAND
NAVAL STATION NORFOLK, VIRGINIA
NAVAL WEAPONS STATION
YORKTOWN, VIRGINIA
P-171 WEAPONS MAGAZINES
ELECTRICAL SITE PLAN - MAGAZINE

SCALE: AS SHOWN
EPROJECT NO.: 1737010
CONSTR. CONTR. NO. ##
NAVFAC DRAWING NO. 12941945
SHEET 289 OF 499
ES102

DRAWFORM REVISION: 14 SEP 2023

FILE NAME: K:\VA\Yorktown\MILCON\2024_1737010_P171_Weapons_Magazines\B_Design\DWGS - MAGAZINE\Sheet\13_ELEC\P171-1737010-ES102.dwg LAYOUT NAME: ES102 ELECTRICAL SITE PLAN - MAGAZINE PLOTTED: Tuesday, March 31, 2026 - 7:12am USER: dayton.obrien

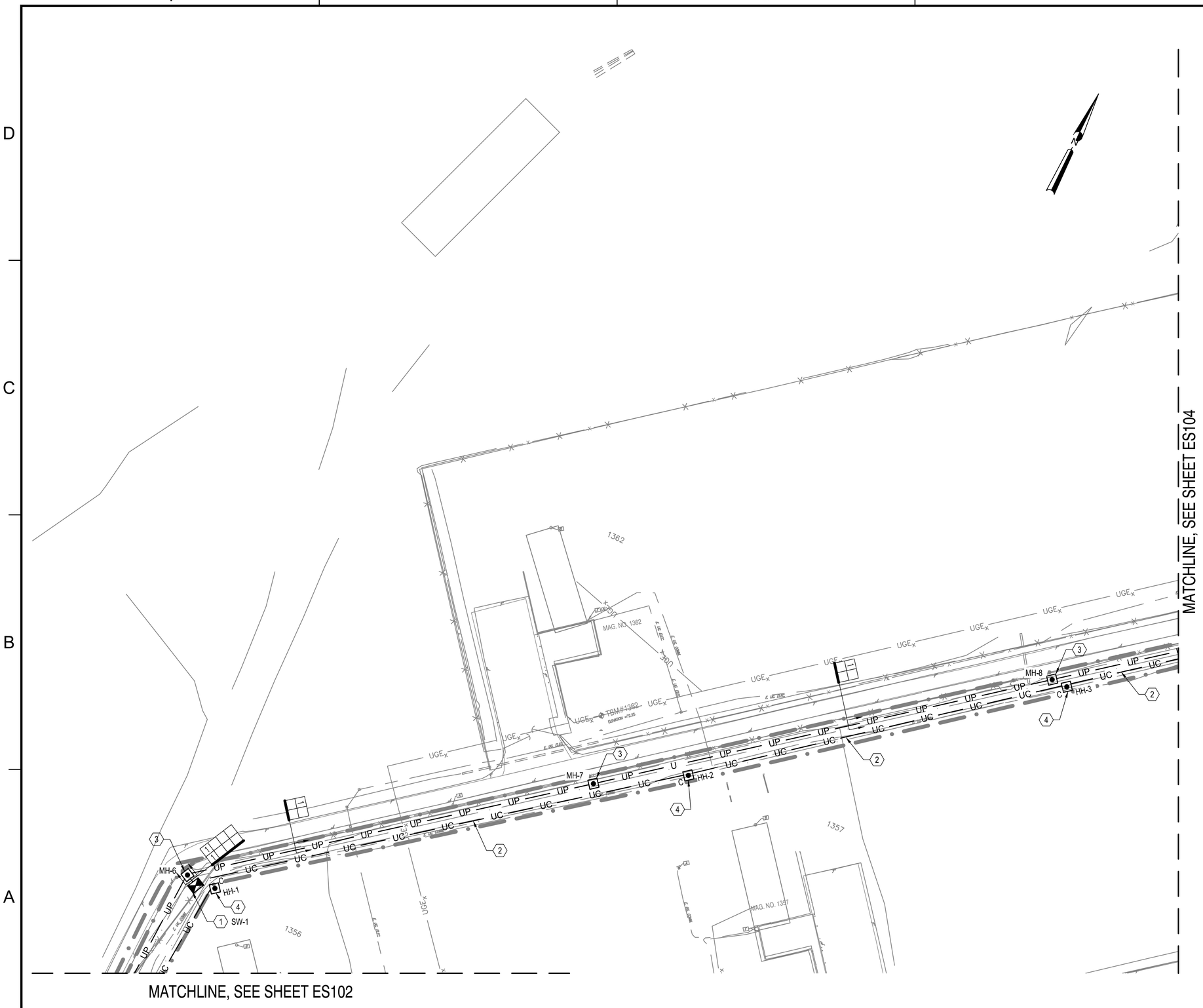


## GENERAL SHEET NOTES

A. LOCATE AND MARK ALL EXISTING UNDERGROUND UTILITIES PRIOR TO EXCAVATION. EXERCISE EXTREME CAUTION TO PREVENT DAMAGE TO EXISTING UTILITIES AND TO PROVIDE MINIMUM CLEARANCE AND COVER.

B. EXERCISE CAUTION WHEN EXCAVATING IN VICINITY OF ELECTRICAL OR COMMUNICATIONS CIRCUITS, CONDUCTORS, CABLING, AND RACEWAYS. IMMEDIATELY NOTIFY CONTRACTING OFFICER OF ANY DAMAGE DONE TO ELECTRICAL OR COMMUNICATION SYSTEMS DURING EXCAVATION AND REPAIR.

C. PRESERVE SURVEY CONTROL POINTS AND RESET ANY CONTROLS DESTROYED OR DISTURBED DUE TO WORK PERFORMED AROUND SURVEY CONTROL POINTS AT NO COST TO THE GOVERNMENT.

D. FIELD VERIFY LOCATION OF EXISTING TELECOM AND FIBER PEDESTALS.

E. PROVIDE SCHEDULE 40 PVC RACEWAYS DIRECT BURIED WITH MIN. 18" COVER IN UNPAVED AREAS FOR SECONDARY ELECTRICAL AND TELECOMMUNICATION DUCTS.

F. MV DUCTBANKS AND SECONDARY ELECTRICAL/COMMUNICATIONS DUCTS RUN UNDER ROADS AND STRUCTURES MUST BE CONCRETE-ENCASED. FOR ALL OTHER CONDUIT RUNS, PROVIDE COVER DEPTHS AS SPECIFIED IN SPECIFICATION 33 71 02.

G. WHERE UNDERGROUND ELECTRICAL AND TELECOMMUNICATION DUCTS CROSS STORM WATER PIPING, RUN DUCTS ABOVE STORM WATER PIPING, UON. PROVIDE MIN. 6" VERTICAL CLEARANCE BETWEEN DUCTS AND STORM WATER PIPING.

H. PROVIDE UNDERGROUND CABLE MARKERS EVERY 500' AND AT BOTH SIDE OF ROAD CROSSINGS ALONG LENGTH OF F.O. RUN. SEE DETAIL A4 ON ES501.

I. COORDINATE WITH NAVY MUNITIONS COMMAND TO OBTAIN ACCESS TO THE RESTRICTED AREA AROUND MAGAZINE GROUP #14. CONTACT NMC TO HAVE THE GATES UNLOCKED ON A DAILY BASIS, AND SECURE THE GATES AT THE END OF THE DAY ON WEEKDAYS. ACCESS IS RESTRICTED DURING ORDNANCE MOVEMENTS.

J. USE EXTREME CAUTION TO AVOID DAMAGE TO THE EXISTING SECURITY FENCING. RESTORE FENCE TO EXISTING CONDITION, INCLUDING AGGREGATE EMBEDMENT OF THE FABRIC.

## KEYNOTES

1. 13.2KV, 6-WAY SECTIONALIZING SWITCH.
2. PROVIDE 4" DIRECT BURIED PVC CONDUIT CONTAINING (1) 1" INNERDUCT CONTAINING 96-STRAND SM FIBER OPTIC CABLE, AND (2) 1" SPARE INNERDUCT EACH WITH PULL STRING. PROVIDE 3" WIDE DETECTABLE TAPE 6" BELOW FINISHED GRADE.
3. PROVIDE TYPE 2 ELECTRICAL MANHOLE, SEE DETAIL UG-1 ON SHEET ES502.
4. PROVIDE TYPE 8 ELECTRICAL HANDHOLE, SEE DETAIL UG-6 ON SHEET ES502.

## KEYPLAN

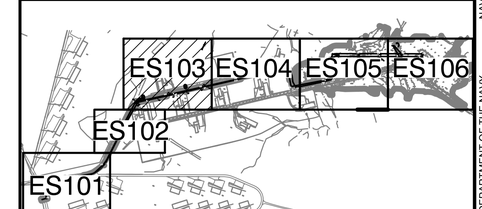


## GRAPHIC SCALE

1"=40' 0' 40' 80'

| MARK | DESCRIPTION | DATE |
|---|---|---|

SEAL

A/E INFO

APPROVED
Gerard E. Greenlaw, R.A.

FOR COMMANDER NAVFAC

ACTIVITY
Approved by LCDR VINCE DEL GRECO, ROICC with PWD YORKTOWN, via Email.

SATISFACTORY TO DATE 03/26/2026

| DES | CPO | DRW | CPO | CHK | JDU |
|---|---|---|---|---|---|

| | |
|---|---|
| PM/DM | MME/WJW |
| BRANCH MANAGER | WRB |
| CHIEF ENG/ARCH | JWJ |
| FIRE PROTECTION | HPN |

DEPARTMENT OF THE NAVY
NAVAL FACILITIES ENGINEERING SYSTEMS COMMAND
MIDLANT PDC CORE

NAVAL FACILITIES ENGINEERING SYSTEMS COMMAND
NAVAL STATION NORFOLK, VIRGINIA

NAVAL WEAPONS STATION
YORKTOWN, VIRGINIA

P-171 WEAPONS MAGAZINES

ELECTRICAL SITE PLAN - MAGAZINE

SCALE: AS SHOWN
EPROJECT NO.: 1737010
CONSTR. CONTR. NO.: ##
NAVFAC DRAWING NO.: 12941946
SHEET 290 OF 499

ES103

DRAWFORM REVISION: 14 SEP 2023

FILE NAME: K:\AYorktown\MILCON\2024_1737010_P171_Weapons_Magazines\B_Design\DWGS - MAGAZINES\Sheet\13_ELEC\P171-1737010-ES103.dwg LAYOUT NAME: ES103 ELECTRICAL SITE PLAN - MAGAZINE PLOTTED: Tuesday, March 31, 2026 - 7:13am USER: dlayton.obrien

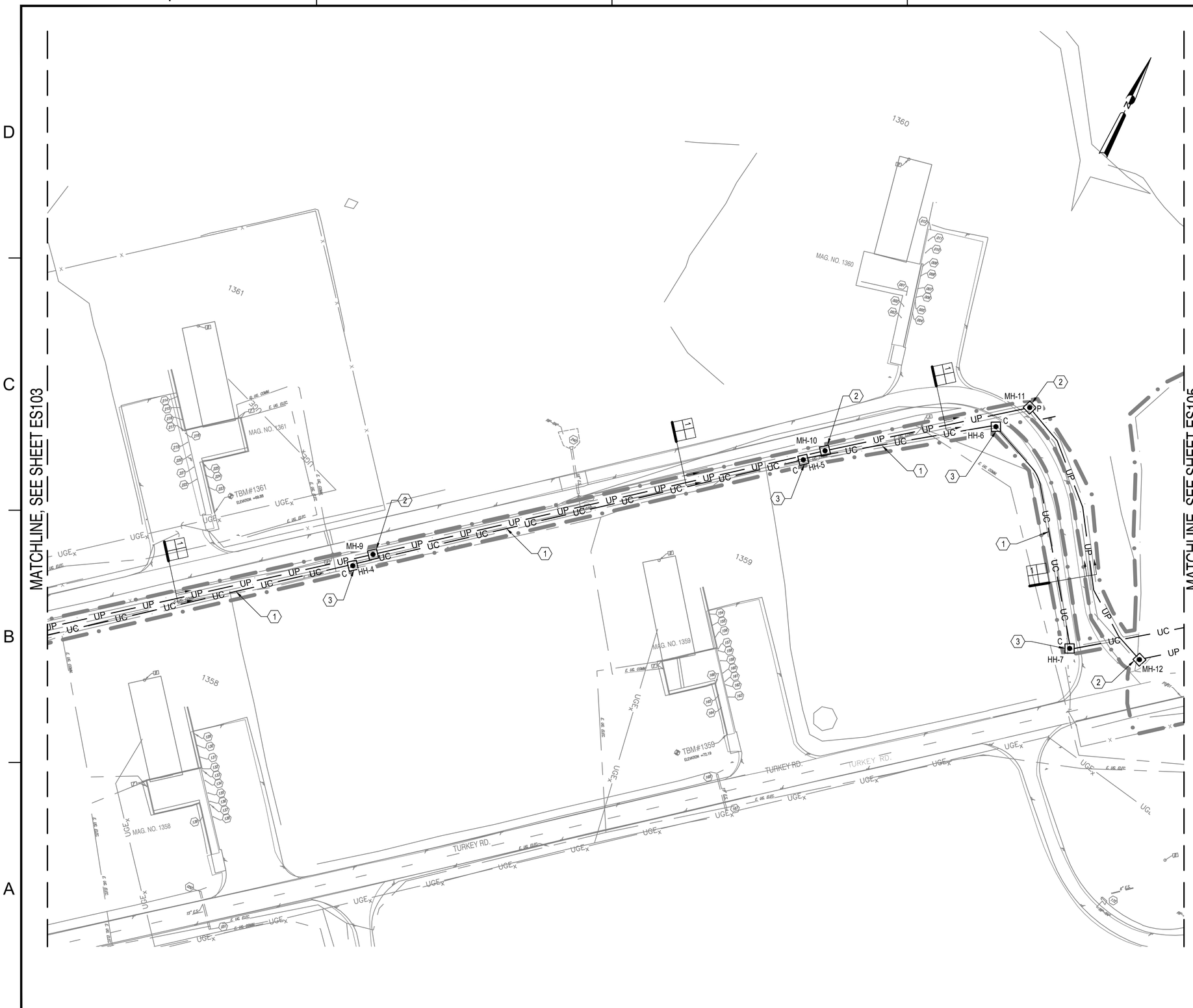


# GENERAL SHEET NOTES

A. LOCATE AND MARK ALL EXISTING UNDERGROUND UTILITIES PRIOR TO EXCAVATION. EXERCISE EXTREME CAUTION TO PREVENT DAMAGE TO EXISTING UTILITIES AND TO PROVIDE MINIMUM CLEARANCE AND COVER.

B. EXERCISE CAUTION WHEN EXCAVATING IN VICINITY OF ELECTRICAL OR COMMUNICATIONS CIRCUITS, CONDUCTORS, CABLING, AND RACEWAYS. IMMEDIATELY NOTIFY CONTRACTING OFFICER OF ANY DAMAGE DONE TO ELECTRICAL OR COMMUNICATION SYSTEMS DURING EXCAVATION AND REPAIR.

C. PRESERVE SURVEY CONTROL POINTS AND RESET ANY CONTROLS DESTROYED OR DISTURBED DUE TO WORK PERFORMED AROUND SURVEY CONTROL POINTS AT NO COST TO THE GOVERNMENT.

D. FIELD VERIFY LOCATION OF EXISTING TELECOM AND FIBER PEDESTALS.

E. PROVIDE SCHEDULE 40 PVC RACEWAYS DIRECT BURIED WITH MIN. 18" COVER IN UNPAVED AREAS FOR SECONDARY ELECTRICAL AND TELECOMMUNICATION DUCTS.

F. MV DUCTBANKS AND SECONDARY ELECTRICAL/COMMUNICATIONS DUCTS RUN UNDER ROADS AND STRUCTURES MUST BE CONCRETE-ENCASED. FOR ALL OTHER CONDUIT RUNS, PROVIDE COVER DEPTHS AS SPECIFIED IN SPECIFICATION 33 71 02.

G. WHERE UNDERGROUND ELECTRICAL AND TELECOMMUNICATION DUCTS CROSS STORM WATER PIPING, RUN DUCTS ABOVE STORM WATER PIPING, UON. PROVIDE MIN. 6" VERTICAL CLEARANCE BETWEEN DUCTS AND STORM WATER PIPING.

H. PROVIDE UNDERGROUND CABLE MARKERS EVERY 500' AND AT BOTH SIDE OF ROAD CROSSINGS ALONG LENGTH OF F.O. RUN. SEE DETAIL A4 ON ES501.

I. COORDINATE WITH NAVY MUNITIONS COMMAND TO OBTAIN ACCESS TO THE RESTRICTED AREA AROUND MAGAZINE GROUP #14. CONTACT NMC TO HAVE THE GATES UNLOCKED ON A DAILY BASIS, AND SECURE THE GATES AT THE END OF THE DAY ON WEEKDAYS. ACCESS IS RESTRICTED DURING ORDNANCE MOVEMENTS.

J. USE EXTREME CAUTION TO AVOID DAMAGE TO THE EXISTING SECURITY FENCING. RESTORE FENCE TO EXISTING CONDITION, INCLUDING AGGREGATE EMBEDMENT OF THE FABRIC.

# KEYNOTES

1. PROVIDE 4" DIRECT BURIED PVC CONDUIT CONTAINING (1) 1" INNERDUCT CONTAINING 96-STRAND SM FIBER OPTIC CABLE, AND (2) 1" SPARE INNERDUCT EACH WITH PULL STRING. PROVIDE 3" WIDE DETECTABLE TAPE 6" BELOW FINISHED GRADE.

2. PROVIDE TYPE 2 ELECTRICAL MANHOLE, SEE DETAIL UG-1 ON SHEET ES502.

4. PROVIDE TYPE 8 ELECTRICAL HANDHOLE, SEE DETAIL UG-6 ON SHEET ES502.

# KEYPLAN

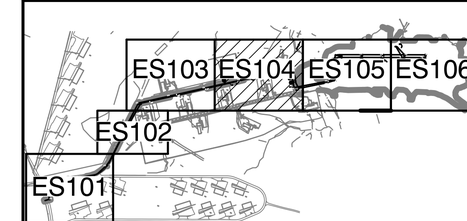


# GRAPHIC SCALE

1"=40'  0'  40'  80'

| MARK | DESCRIPTION | DATE |
|---|---|---|

SEAL

A/E INFO

APPROVED
James E. Christian, P.E.
FOR COMMANDER NAVFAC

ACTIVITY:
Approved by LCDR VINCE DEL GRECO, ROICC with PWD YORKTOWN, via Email.
SATISFACTORY TO DATE 03/26/2026

DES CPO | DRW CPO | CHK JDU
PM/DM MME/WJW
BRANCH MANAGER WRB
CHIEF ENG/ARCH JWJ
FIRE PROTECTION HPN

DEPARTMENT OF THE NAVY
NAVAL FACILITIES ENGINEERING SYSTEMS COMMAND
MIDLANT PDC CORE

NAVAL FACILITIES ENGINEERING SYSTEMS COMMAND
NAVAL STATION NORFOLK, VIRGINIA

NAVAL WEAPONS STATION
YORKTOWN, VIRGINIA

P-171 WEAPONS MAGAZINES

ELECTRICAL SITE PLAN - MAGAZINE

SCALE: AS SHOWN
EPROJECT NO.: 1737010
CONSTR. CONTR. NO. ##
NAVFAC DRAWING NO. 12941947
SHEET 291 OF 499

ES104

DRAWFORM REVISION: 14 SEP 2023

FILE NAME: K:\AVYorktown\MILCON\2024_1737010_P171_Weapons_Magazines\B_Design\DWGS - MAGAZINE\Sheet\13_ELECP171-1737010-ES104.dwg LAYOUT NAME: ES104 ELECTRICAL SITE PLAN - MAGAZINE PLOTTED: Tuesday, March 31, 2026 - 7:14am USER: dayton.obrien

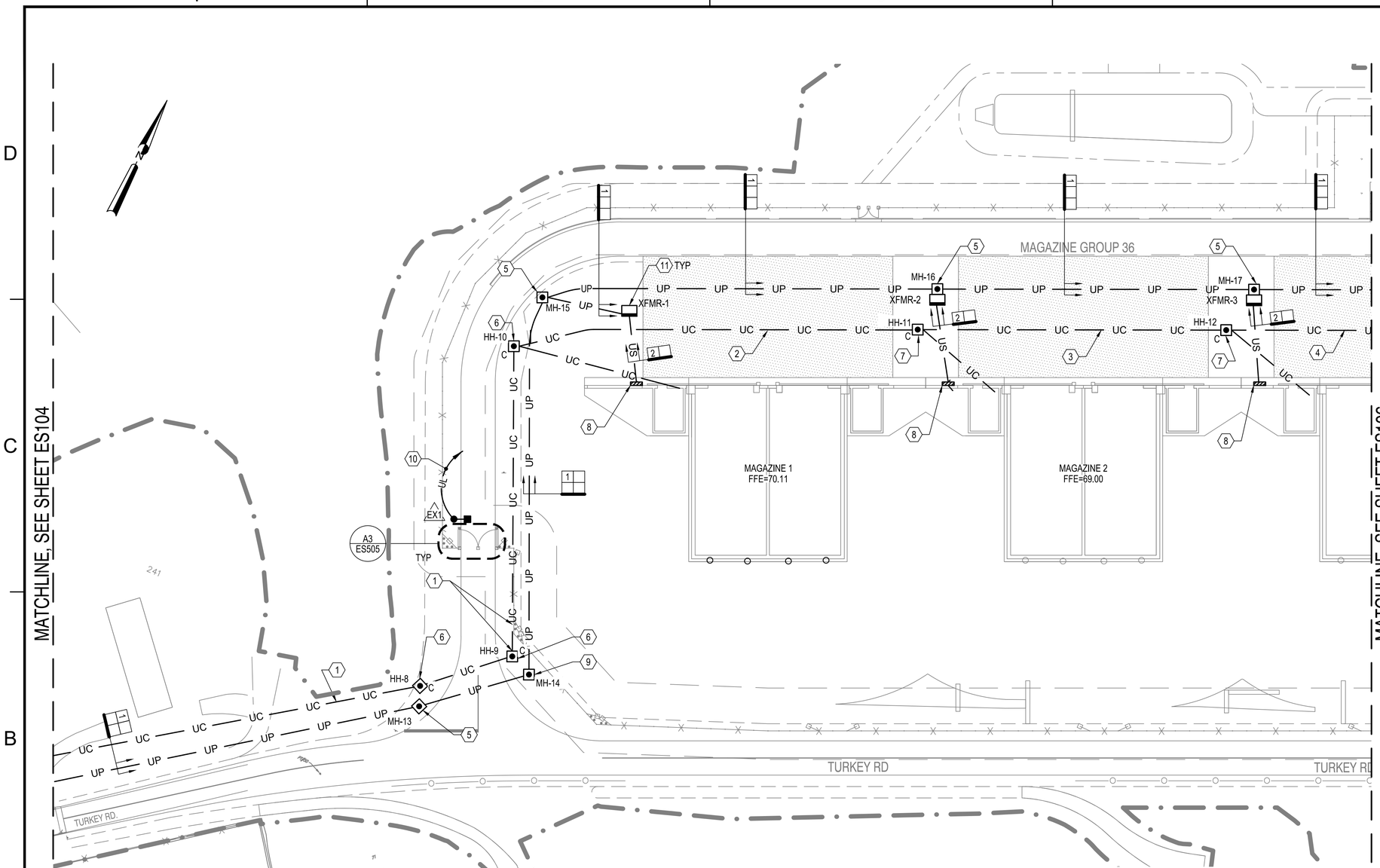


## GENERAL SHEET NOTES

A. LOCATE AND MARK ALL EXISTING UNDERGROUND UTILITIES PRIOR TO EXCAVATION. EXERCISE EXTREME CAUTION TO PREVENT DAMAGE TO EXISTING UTILITIES AND TO PROVIDE MINIMUM CLEARANCE AND COVER.

B. EXERCISE CAUTION WHEN EXCAVATING IN VICINITY OF ELECTRICAL OR COMMUNICATIONS CIRCUITS, CONDUCTORS, CABLING, AND RACEWAYS. IMMEDIATELY NOTIFY CONTRACTING OFFICER OF ANY DAMAGE DONE TO ELECTRICAL OR COMMUNICATION SYSTEMS DURING EXCAVATION AND REPAIR.

C. PRESERVE SURVEY CONTROL POINTS AND RESET ANY CONTROLS DESTROYED OR DISTURBED DUE TO WORK PERFORMED AROUND SURVEY CONTROL POINTS AT NO COST TO THE GOVERNMENT.

D. FIELD VERIFY LOCATION OF EXISTING TELECOM AND FIBER PEDESTALS.

E. PROVIDE SCHEDULE 40 PVC RACEWAYS DIRECT BURIED WITH MIN. 18" COVER IN UNPAVED AREAS FOR SECONDARY ELECTRICAL AND TELECOMMUNICATION DUCTS.

F. MV DUCTBANKS AND SECONDARY ELECTRICAL/COMMUNICATIONS DUCTS RUN UNDER ROADS AND STRUCTURES MUST BE CONCRETE-ENCASED. FOR ALL OTHER CONDUIT RUNS, PROVIDE COVER DEPTHS AS SPECIFIED IN SPECIFICATION 33 71 02.

G. WHERE UNDERGROUND ELECTRICAL AND TELECOMMUNICATION DUCTS CROSS STORM WATER PIPING, RUN DUCTS ABOVE STORM WATER PIPING, UON. PROVIDE MIN. 6" VERTICAL CLEARANCE BETWEEN DUCTS AND STORM WATER PIPING.

H. PROVIDE UNDERGROUND CABLE MARKERS EVERY 500' AND AT BOTH SIDE OF ROAD CROSSINGS ALONG LENGTH OF F.O. RUN. SEE DETAIL A4 ON ES501.

I. SEE FENCE GROUNDING DETAILS ON SHEET ES505.

## KEYNOTES

1. PROVIDE 4" DIRECT BURIED PVC CONDUIT CONTAINING (1) 1" INNERDUCT CONTAINING 96-STRAND SM FIBER OPTIC CABLE, AND (2) 1" SPARE INNERDUCT EACH WITH PULL STRING. PROVIDE 3" WIDE DETECTABLE TAPE 6" BELOW FINISHED GRADE.
2. PROVIDE 4" DIRECT BURIED PVC CONDUIT CONTAINING (1) 1" INNERDUCT CONTAINING 48-STRAND SM FIBER OPTIC CABLE, AND (2) 1" SPARE INNERDUCT EACH WITH PULL STRING. PROVIDE 3" WIDE DETECTABLE TAPE 6" BELOW FINISHED GRADE.
3. PROVIDE 4" DIRECT BURIED PVC CONDUIT CONTAINING (1) 1" INNERDUCT CONTAINING 36-STRAND SM FIBER OPTIC CABLE, AND (2) 1" SPARE INNERDUCT EACH WITH PULL STRING. PROVIDE 3" WIDE DETECTABLE TAPE 6" BELOW FINISHED GRADE.
4. PROVIDE 4" DIRECT BURIED PVC CONDUIT CONTAINING (1) 1" INNERDUCT CONTAINING 24-STRAND SM FIBER OPTIC CABLE, AND (2) 1" SPARE INNERDUCT EACH WITH PULL STRING. PROVIDE 3" WIDE DETECTABLE TAPE 6" BELOW FINISHED GRADE.
5. PROVIDE TYPE 3 ELECTRICAL MANHOLE, SEE DETAIL UG-2 ON SHEET ES502.
6. PROVIDE TYPE 8 ELECTRICAL HANDHOLE, SEE DETAIL UG-6 ON SHEET ES502.
7. PROVIDE TYPE 3 ELECTRICAL HANDHOLE, SEE DETAIL UG-5 ON SHEET ES502.
8. MDP-M PANEL, 208/120V. SURFACE MOUNT TO SIDE OF MAGAZINE WALL.
9. PROVIDE TYPE 2 MANHOLE, SEE DETAIL UG-1 ON SHEET ES502.
10. FED FROM "MAGAZINE 1", CIRCUIT "DP1-23".
11. PROVIDE EQUIPMENT STAND FOR METER BASE AND COMMUNICATION CABINET AT TRANSFORMER. SEE DETAIL A1/ES504.

## KEYPLAN

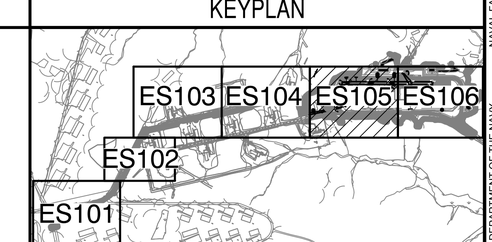


## GRAPHIC SCALE

1"=40' 0' 40' 80'

| MARK | DESCRIPTION | DATE |
|---|---|---|

NAVFAC

SEAL

A/E INFO

APPROVED
James E. Greene, P.E.
FOR COMMANDER NAVFAC

ACTIVITY
Approved by LCDR VINCE DEL GRECO, ROICC with PWD YORKTOWN, via Email.
SATISFACTORY TO DATE 03/26/2026

DES CPO | DRW CPO | CHK JDU
PM/DM MME/WJW
BRANCH MANAGER WRB
CHIEF ENG/ARCH JWJ
FIRE PROTECTION HPN

DEPARTMENT OF THE NAVY
NAVAL FACILITIES ENGINEERING SYSTEMS COMMAND
MIDLANT PDC CORE
NAVAL FACILITIES ENGINEERING SYSTEMS COMMAND
NAVAL STATION NORFOLK, VIRGINIA
NAVAL WEAPONS STATION
YORKTOWN, VIRGINIA
P-171 WEAPONS MAGAZINES
ELECTRICAL SITE PLAN - MAGAZINE

SCALE: AS SHOWN
EPROJECT NO.: 1737010
CONSTR. CONTR. NO. ##
NAVFAC DRAWING NO. 12941948
SHEET 292 OF 499
ES105
DRAWFORM REVISION: 14 SEP 2023

FILE NAME: K:\NAYorktown\MILCON\2024_1737010_P171_Weapons_Magazines\B_Design\DWGS - MAGAZINE\Sheet13_ELEC\P171-1737010-ES105.dwg LAYOUT NAME: ES105 ELECTRICAL SITE PLAN - MAGAZINE PLOTTED: Tuesday, March 31, 2026 - 7:15am USER: dayton.obrien

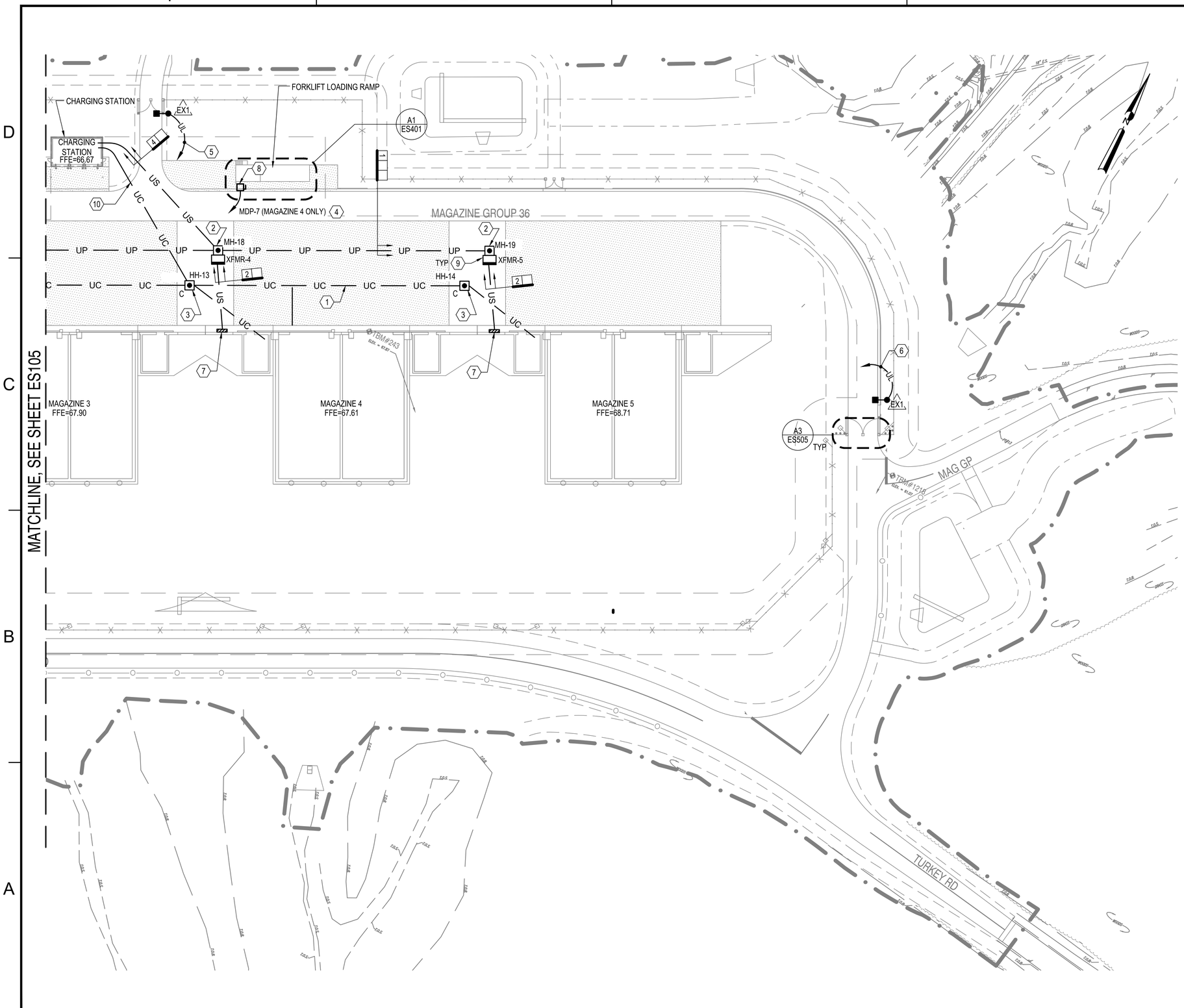


# GENERAL SHEET NOTES

A. LOCATE AND MARK ALL EXISTING UNDERGROUND UTILITIES PRIOR TO EXCAVATION. EXERCISE EXTREME CAUTION TO PREVENT DAMAGE TO EXISTING UTILITIES AND TO PROVIDE MINIMUM CLEARANCE AND COVER.

B. EXERCISE CAUTION WHEN EXCAVATING IN VICINITY OF ELECTRICAL OR COMMUNICATIONS CIRCUITS, CONDUCTORS, CABLING, AND RACEWAYS. IMMEDIATELY NOTIFY CONTRACTING OFFICER OF ANY DAMAGE DONE TO ELECTRICAL OR COMMUNICATION SYSTEMS DURING EXCAVATION AND REPAIR.

C. PRESERVE SURVEY CONTROL POINTS AND RESET ANY CONTROLS DESTROYED OR DISTURBED DUE TO WORK PERFORMED AROUND SURVEY CONTROL POINTS AT NO COST TO THE GOVERNMENT.

D. FIELD VERIFY LOCATION OF EXISTING TELECOM AND FIBER PEDESTALS.

E. PROVIDE SCHEDULE 40 PVC RACEWAYS DIRECT BURIED WITH MIN. 18" COVER IN UNPAVED AREAS FOR SECONDARY ELECTRICAL AND TELECOMMUNICATION DUCTS.

F. MV DUCTBANKS AND SECONDARY ELECTRICAL/COMMUNICATIONS DUCTS RUN UNDER ROADS AND STRUCTURES MUST BE CONCRETE-ENCASED. FOR ALL OTHER CONDUIT RUNS, PROVIDE COVER DEPTHS AS SPECIFIED IN SPECIFICATION 33 71 02.

G. WHERE UNDERGROUND ELECTRICAL AND TELECOMMUNICATION DUCTS CROSS STORM WATER PIPING, RUN DUCTS ABOVE STORM WATER PIPING, UON. PROVIDE MIN. 6" VERTICAL CLEARANCE BETWEEN DUCTS AND STORM WATER PIPING.

H. PROVIDE UNDERGROUND CABLE MARKERS EVERY 500' AND AT BOTH SIDE OF ROAD CROSSINGS ALONG LENGTH OF F.O. RUN. SEE DETAIL A4 ON ES501.

I. SEE FENCE GROUNDING DETAIL ON SHEET ES505.

# KEYNOTES

1. PROVIDE 4" DIRECT BURIED PVC CONDUIT CONTAINING (1) 1" INNERDUCT CONTAINING 12-STRAND SM FIBER OPTIC CABLE, AND (2) 1" SPARE INNERDUCT EACH WITH PULL STRING. PROVIDE 3" WIDE DETECTABLE TAPE 6" BELOW FINISHED GRADE.
2. PROVIDE TYPE 3 ELECTRICAL MANHOLE, SEE DETAIL UG-2 ON SHEET ES502.
3. PROVIDE TYPE 3 ELECTRICAL HANDHOLE, SEE DETAIL UG-5 ON SHEET ES502.
4. PROVIDE 1" PVC FROM DOCK LEVELER ELECTRICAL EQUIPMENT RACK TO MAGAZINE 4.
5. FED FROM "MAGAZINE 4", CIRCUIT "DP1-23".
6. FED FROM "MAGAZINE 5", CIRCUIT "DP2-23".
7. MDP-M PANEL, 208V/120V. SURFACE MOUNT TO SIDE OF MAGAZINE WALL.
8. DOCK LEVELER, 120V, 1HP.
9. PROVIDE EQUIPMENT STAND FOR METER BASE AND COMMUNICATION CABINET AT TRANSFORMER. SEE DETAIL A1/ES504.
10. PROVIDE 4" DIRECT BURIED PVC EMPTY CONDUIT WITH PULLSTRING TO COMMUNICATIONS BACKBOARD.

# KEYPLAN

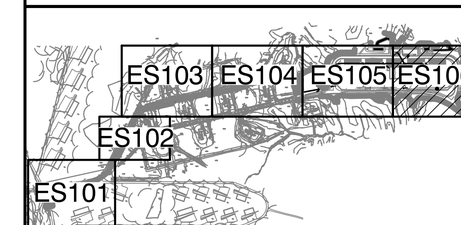


# GRAPHIC SCALE

1"=40' 0' 40' 80'

| MARK | DESCRIPTION | DATE |
|---|---|---|

SEAL

A/E INFO

APPROVED
Jason E. Delaney, P.E.
FOR COMMANDER NAVFAC

ACTIVITY: Approved by LCDR VINCE DEL GRECO, ROICC with PWD YORKTOWN, via Email.
SATISFACTORY TO DATE 03/26/2026

| DES | DRW | CHK |
|---|---|---|
| CPO | CPO | JDU |

| | |
|---|---|
| PM/DM | MME/WJW |
| BRANCH MANAGER | WRB |
| CHIEF ENG/ARCH | JWJ |
| FIRE PROTECTION | HPN |

DEPARTMENT OF THE NAVY
NAVAL FACILITIES ENGINEERING SYSTEMS COMMAND
MIDLANT PDC CORE

NAVAL FACILITIES ENGINEERING SYSTEMS COMMAND
NAVAL STATION NORFOLK, VIRGINIA

NAVAL WEAPONS STATION
YORKTOWN, VIRGINIA

P-171 WEAPONS MAGAZINES

ELECTRICAL SITE PLAN - MAGAZINE

SCALE: AS SHOWN
EPROJECT NO.: 1737010
CONSTR. CONTR. NO.: ##
NAVFAC DRAWING NO.: 12941949
SHEET 293 OF 499

ES106

DRAWFORM REVISION: 14 SEP 2023

FILE NAME: K:\AI\Yorktown\MILCON\2024_1737010_P171_Weapons_Magazines\B_Design\DWGS - MAGAZINE\Sheet\13_ELEC\P171-1737010-ES106.dwg LAYOUT NAME: ES106 ELECTRICAL SITE PLAN - MAGAZINE PLOTTED: Tuesday, March 31, 2026 - 7:15am USER: dayton.obrien

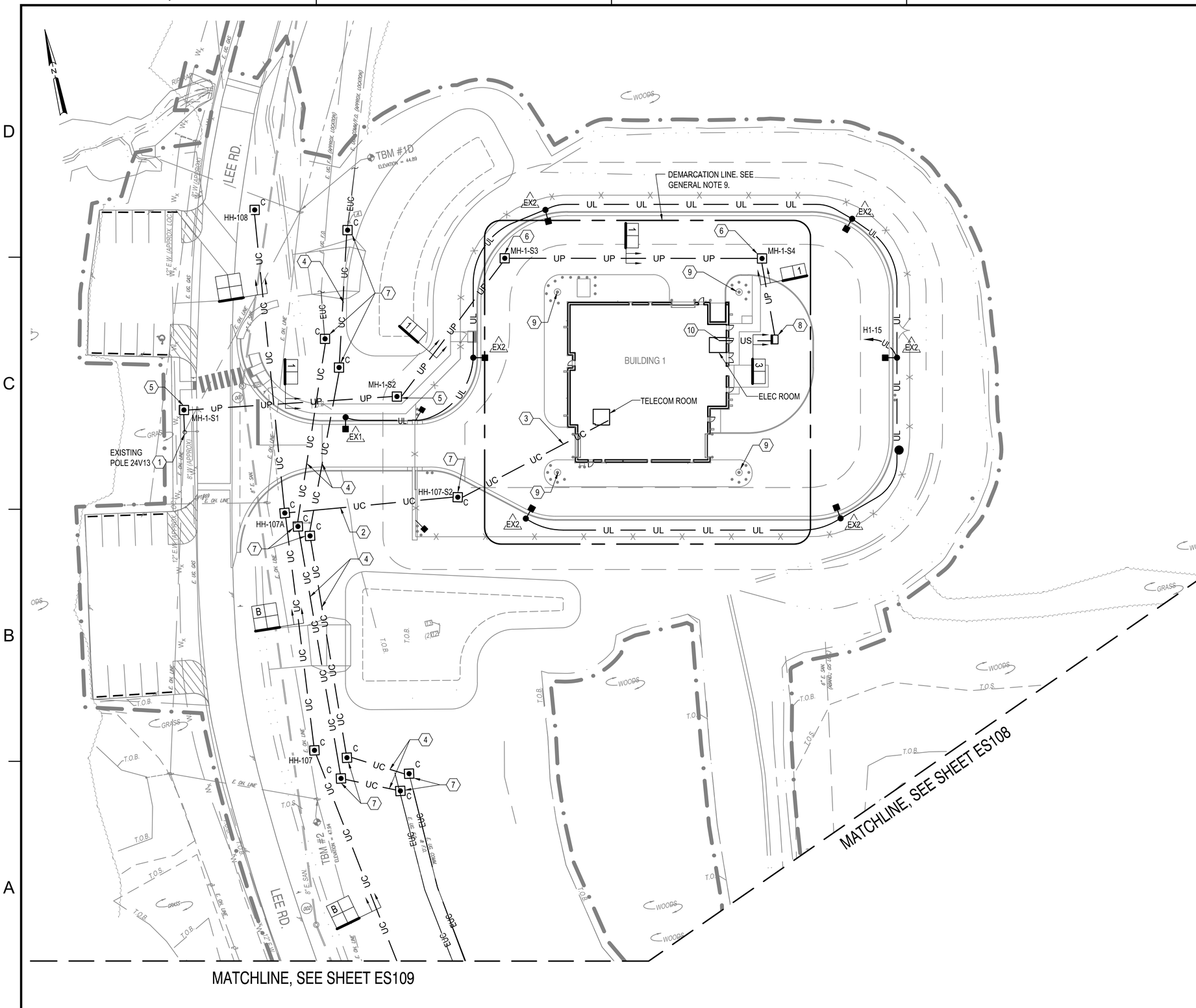


# GENERAL SHEET NOTES

A. LOCATE AND MARK ALL EXISTING UNDERGROUND UTILITIES PRIOR TO EXCAVATION. EXERCISE EXTREME CAUTION TO PREVENT DAMAGE TO EXISTING UTILITIES AND TO PROVIDE MINIMUM CLEARANCE AND COVER.

B. EXERCISE CAUTION WHEN EXCAVATING IN VICINITY OF ELECTRICAL OR COMMUNICATIONS CIRCUITS, CONDUCTORS, CABLING, AND RACEWAYS. IMMEDIATELY NOTIFY CONTRACTING OFFICER OF ANY DAMAGE DONE TO ELECTRICAL OR COMMUNICATION SYSTEMS DURING EXCAVATION AND REPAIR.

C. PRESERVE SURVEY CONTROL POINTS AND RESET ANY CONTROLS DESTROYED OR DISTURBED DUE TO WORK PERFORMED AROUND SURVEY CONTROL POINTS AT NO COST TO THE GOVERNMENT.

D. FIELD VERIFY LOCATION OF EXISTING TELECOM AND FIBER PEDESTALS.

E. PROVIDE SCHEDULE 40 PVC RACEWAYS DIRECT BURIED WITH MIN. 18" COVER IN UNPAVED AREAS FOR SECONDARY ELECTRICAL AND TELECOMMUNICATION DUCTS.

F. MV DUCTBANKS AND SECONDARY ELECTRICAL/COMMUNICATIONS DUCTS RUN UNDER ROADS AND STRUCTURES MUST BE CONCRETE-ENCASED. FOR ALL OTHER CONDUIT RUNS, PROVIDE COVER DEPTHS AS SPECIFIED IN SPECIFICATION 33 71 02.

G. WHERE UNDERGROUND ELECTRICAL AND TELECOMMUNICATION DUCTS CROSS STORM WATER PIPING, RUN DUCTS ABOVE STORM WATER PIPING, UON. PROVIDE MIN. 6" VERTICAL CLEARANCE BETWEEN DUCTS AND STORM WATER PIPING.

H. PROVIDE UNDERGROUND CABLE MARKERS EVERY 500' AND AT BOTH SIDE OF ROAD CROSSINGS ALONG LENGTH OF F.O. RUN. SEE DETAIL A4 ON ES501.

I. 50 FOOT DEMARCATION LINE. METALLIC CONDUIT MUST BE ROUTED UNDERGROUND FOR AT LEAST 50 FEET FROM THE STRUCTURE AND BONDED WITH MINIMUM #2/0 COPPER WIRE TO PRIMARY AND SECONDARY GROUND GIRDLES WHERE THEY CROSS.

J. SEE FENCE GROUNDING DETAILS ON SHEET ES505.

K. SEE SEGREGATION BUILDINGS GROUNDING PLANS ON SHEETS EG101A, EG501A, EG502A AND EG601A.

# KEYNOTES

1. PROVIDE RISER AND FUSED CUTOUTS TO CONNECT TO EXISTING OVERHEAD POWER LINE AND TRANSITION TO UNDERGROUND DUCTBANK. BOND THE GROUNDED NEUTRAL TO THE GROUNDING ELECTRODE SYSTEM AT THE POLE. SEE POLE DETAILS ON ES501 FOR ADDITION INFORMATION.
2. PROVIDE 4" DIRECT BURIED PVC CONDUIT CONTAINING (1) 1" INNERDUCT CONTAINING 12-STRAND SM FIBER OPTIC CABLE, 12-STRAND SM FIBER OPTIC CABLE FOR AMI NETWORK, AND (2) 1" SPARE INNERDUCT EACH WITH PULL STRING. PROVIDE 3" WIDE DETECTABLE TAPE 6" BELOW FINISHED GRADE.
3. PROVIDE (2) 4" CONDUITS STUBBED UP IN TELECOM ROOM. SEE SHEET TT401 FOR ADDITIONAL INFORMATION.
4. REROUTE FIBER LINES AS SHOWN ON ED101. SPLICE INTO EXISTING COMMUNICATIONS CABLING AT HANDHOLE, MATCHING THE EXISTING COMMUNICATIONS CABLING AND CONDUIT SIZE. COORDINATE WITH CIVIL PLANS AND THE BASE COMMUNICATIONS OFFICER.
5. PROVIDE TYPE 2 ELECTRICAL MANHOLE, SEE DETAIL UG-1 ON SHEET ES502.
6. PROVIDE TYPE 4 ELECTRICAL MANHOLE, SEE DETAIL UG-2 ON SHEET ES502.
7. PROVIDE TYPE 4 ELECTRICAL TRAFFIC RATED HANDHOLE MINIMUM FOR TELECOM ROUTING. SIZE HANDHOLE TO ACCOMMODATE SPLICES CASES AND SPARE CABLE LENGTH. SEE DETAIL UG-5 ON SHEET ES502.
8. 300kVA, 13.2KV-480/277V, PAD MOUNTED TRANSFORMER.
9. LIGHTNING MAST, SEE SHEET EG101A FOR ADDITIONAL INFORMATION.
10. COORDINATE INCOMING ELECTRICAL SERVICE PENETRATIONS WITH STRUCTURAL PLANS. NO UTILITY PENETRATIONS OF EXTERIOR OR INTERIOR CONTINUOUS PILE CAPS PERMITTED.

## KEYPLAN

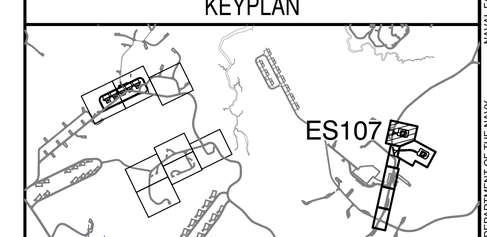


## GRAPHIC SCALE

1"=30' 0' 30' 60'

| MARK | DESCRIPTION | DATE |
|---|---|---|

SEAL

A/E INFO

APPROVED
Jamie E. Donahue, R.A.

FOR COMMANDER NAVFAC

ACTIVITY
Approved by LCDR VINCE DEL GRECO, ROICC with PWD YORKTOWN, via Email.
SATISFACTORY TO DATE 03/26/2026

DES CPO DRW CPO CHK JDU
PM/DM MME/WJW
BRANCH MANAGER WRB
CHIEF ENG/ARCH JWJ
FIRE PROTECTION HPN

DEPARTMENT OF THE NAVY
NAVAL FACILITIES ENGINEERING SYSTEMS COMMAND
MIDLANT PDC CORE

NAVAL FACILITIES ENGINEERING SYSTEMS COMMAND
NAVAL STATION NORFOLK, VIRGINIA

NAVAL WEAPONS STATION
YORKTOWN, VIRGINIA

P-171 WEAPONS MAGAZINES

ELECTRICAL SITE PLAN - SEGREGATION BUILDING

SCALE: AS SHOWN
EPROJECT NO.: 1737010
CONSTR. CONTR. NO. ##
NAVFAC DRAWING NO. 12941950
SHEET 294 OF 499

ES107

DRAWFORM REVISION: 14 SEP 2023

FILE NAME: K:\VA\Yorktown\MILCON\2024_1737010_P171_Weapons_Magazines\B_Design\DWGS - MAGAZINES\Sheet\13_ELEC\P171-1737010-ES107.dwg LAYOUT NAME ES107 ELECTRICAL SITE PLAN - SEGREGATION BUILDING PLOTTED: Wednesday, April 01, 2026 - 6:20am USER: dayton.obrien

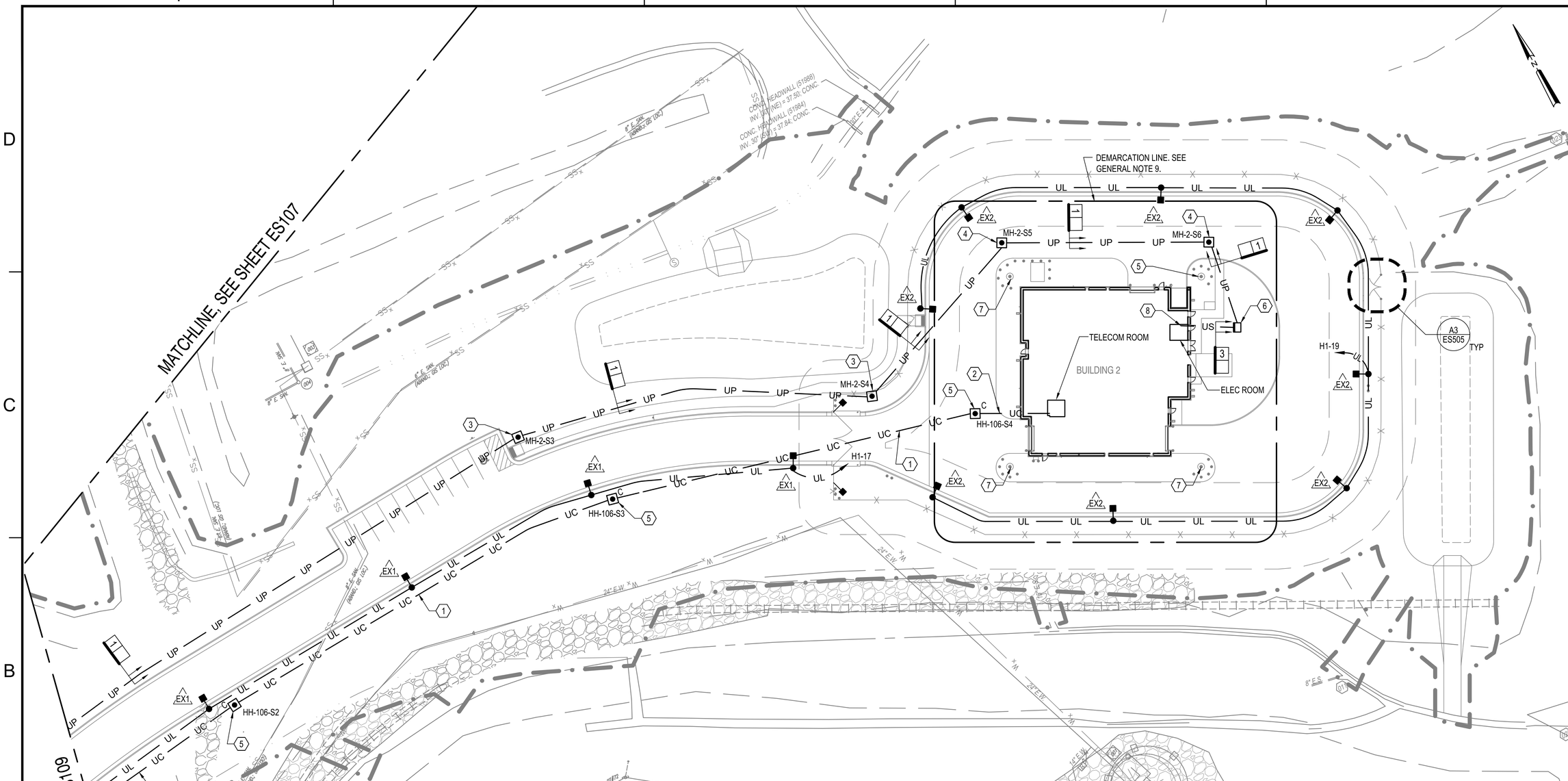


## GENERAL SHEET NOTES

A. LOCATE AND MARK ALL EXISTING UNDERGROUND UTILITIES PRIOR TO EXCAVATION. EXERCISE EXTREME CAUTION TO PREVENT DAMAGE TO EXISTING UTILITIES AND TO PROVIDE MINIMUM CLEARANCE AND COVER.

B. EXERCISE CAUTION WHEN EXCAVATING IN VICINITY OF ELECTRICAL OR COMMUNICATIONS CIRCUITS, CONDUCTORS, CABLING, AND RACEWAYS. IMMEDIATELY NOTIFY CONTRACTING OFFICER OF ANY DAMAGE DONE TO ELECTRICAL OR COMMUNICATION SYSTEMS DURING EXCAVATION AND REPAIR.

C. PRESERVE SURVEY CONTROL POINTS AND RESET ANY CONTROLS DESTROYED OR DISTURBED DUE TO WORK PERFORMED AROUND SURVEY CONTROL POINTS AT NO COST TO THE GOVERNMENT.

D. FIELD VERIFY LOCATION OF EXISTING TELECOM AND FIBER PEDESTALS.

E. PROVIDE SCHEDULE 40 PVC RACEWAYS DIRECT BURIED WITH MIN. 18" COVER IN UNPAVED AREAS FOR SECONDARY ELECTRICAL AND TELECOMMUNICATION DUCTS.

F. MV DUCTBANKS AND SECONDARY ELECTRICAL/COMMUNICATIONS DUCTS RUN UNDER ROADS AND STRUCTURES MUST BE CONCRETE-ENCASED. FOR ALL OTHER CONDUIT RUNS, PROVIDE COVER DEPTHS AS SPECIFIED IN SPECIFICATION 33 71 02.

G. WHERE UNDERGROUND ELECTRICAL AND TELECOMMUNICATION DUCTS CROSS STORM WATER PIPING, RUN DUCTS ABOVE STORM WATER PIPING, UON. PROVIDE MIN. 6" VERTICAL CLEARANCE BETWEEN DUCTS AND STORM WATER PIPING.

H. PROVIDE UNDERGROUND CABLE MARKERS EVERY 500' AND AT BOTH SIDE OF ROAD CROSSINGS ALONG LENGTH OF F.O. RUN. SEE DETAIL A4 ON ES501.

I. 50 FOOT DEMARCATION LINE. METALLIC CONDUIT MUST BE ROUTED UNDERGROUND FOR AT LEAST 50 FEET FROM THE STRUCTURE AND BONDED WITH MINIMUM #2/0 COPPER WIRE TO PRIMARY AND SECONDARY GROUND GIRDLES WHERE THEY CROSS.

J. SEE FENCE GROUNDING DETAILS ON SHEET ES505.

K. SEE SEGREGATION BUILDINGS GROUNDING PLANS ON SHEETS EG101A, EG501A, EG502A AND EG601A.

## KEYNOTES

1. PROVIDE 4" DIRECT BURIED PVC CONDUIT CONTAINING (1) 1" INNERDUCT CONTAINING 12-STRAND SM FIBER OPTIC CABLE, 12-STRAND SM FIBER OPTIC CABLE FOR AMI NETWORK, AND (2) 1" SPARE INNERDUCT EACH WITH PULL STRING. PROVIDE 3" WIDE DETECTABLE TAPE 6" BELOW FINISHED GRADE.
2. PROVIDE (2) 4" CONDUITS STUBBED UP IN TELECOM ROOM. SEE SHEET TT401 FOR ADDITIONAL INFORMATION.
3. PROVIDE TYPE 2 ELECTRICAL MANHOLE, SEE DETAIL UG-1 ON SHEET ES502.
4. PROVIDE TYPE 4 ELECTRICAL MANHOLE, SEE DETAIL UG-2 ON SHEET ES502.
5. PROVIDE TYPE 4 ELECTRICAL HANDHOLE, SEE DETAIL UG-5 ON SHEET ES502.
6. 300kVA, 13.2KV-480/277V, PAD MOUNTED TRANSFORMER.
7. LIGHTNING MAST, SEE SHEET EG101A FOR ADDITIONAL INFORMATION.
8. COORDINATE INCOMING ELECTRICAL SERVICE PENETRATIONS WITH STRUCTURAL PLANS. NO UTILITY PENETRATIONS OF EXTERIOR OR INTERIOR CONTINUOUS PILE CAPS PERMITTED.

## KEYPLAN

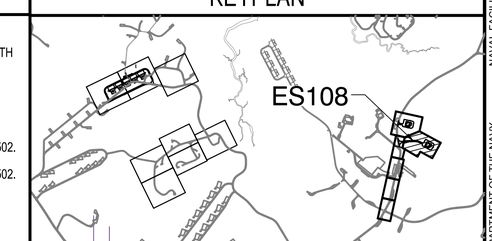


GRAPHIC SCALE

1"=30' 0' 30' 60'

| MARK | DESCRIPTION | DATE |
|---|---|---|
| | | |

NAVFAC

SEAL

A/E INFO

APPROVED
Jamie E. Douglas, P.E.
FOR COMMANDER NAVFAC

ACTIVITY
Approved by LCDR VINCE DEL GRECO, ROICC with PWD YORKTOWN, via Email.
SATISFACTORY TO DATE 03/26/2026

DES CPO DRW CPO CHK JDU
PM/DM MME/WJW
BRANCH MANAGER WRB
CHIEF ENG/ARCH JWJ
FIRE PROTECTION HPN

DEPARTMENT OF THE NAVY
NAVAL FACILITIES ENGINEERING SYSTEMS COMMAND
MIDLANT PDC CORE
NAVAL FACILITIES ENGINEERING SYSTEMS COMMAND
NAVAL STATION NORFOLK, VIRGINIA
NAVAL WEAPONS STATION
YORKTOWN, VIRGINIA
P-171 WEAPONS MAGAZINES

# ELECTRICAL SITE PLAN - SEGREGATION BUILDING

SCALE: AS SHOWN
EPROJECT NO.: 1737010
CONSTR. CONTR. NO. ##
NAVFAC DRAWING NO. 12941951
SHEET 295 OF 499

# ES108

DRAWFORM REVISION: 14 SEP 2023

FILE NAME: K:\NAYorktown\MLCON\2024_1737010_P171_Weapons_Magazines\B_Design\DWGS - MAGAZINE\Sheet\13_ELEC\P171-1737010-ES108.dwg LAYOUT NAME: ES108 ELECTRICAL SITE PLAN - SEGREGATION BUILDING PLOTTED: Tuesday, March 31, 2026 - 7:17am USER: dayton.obrien

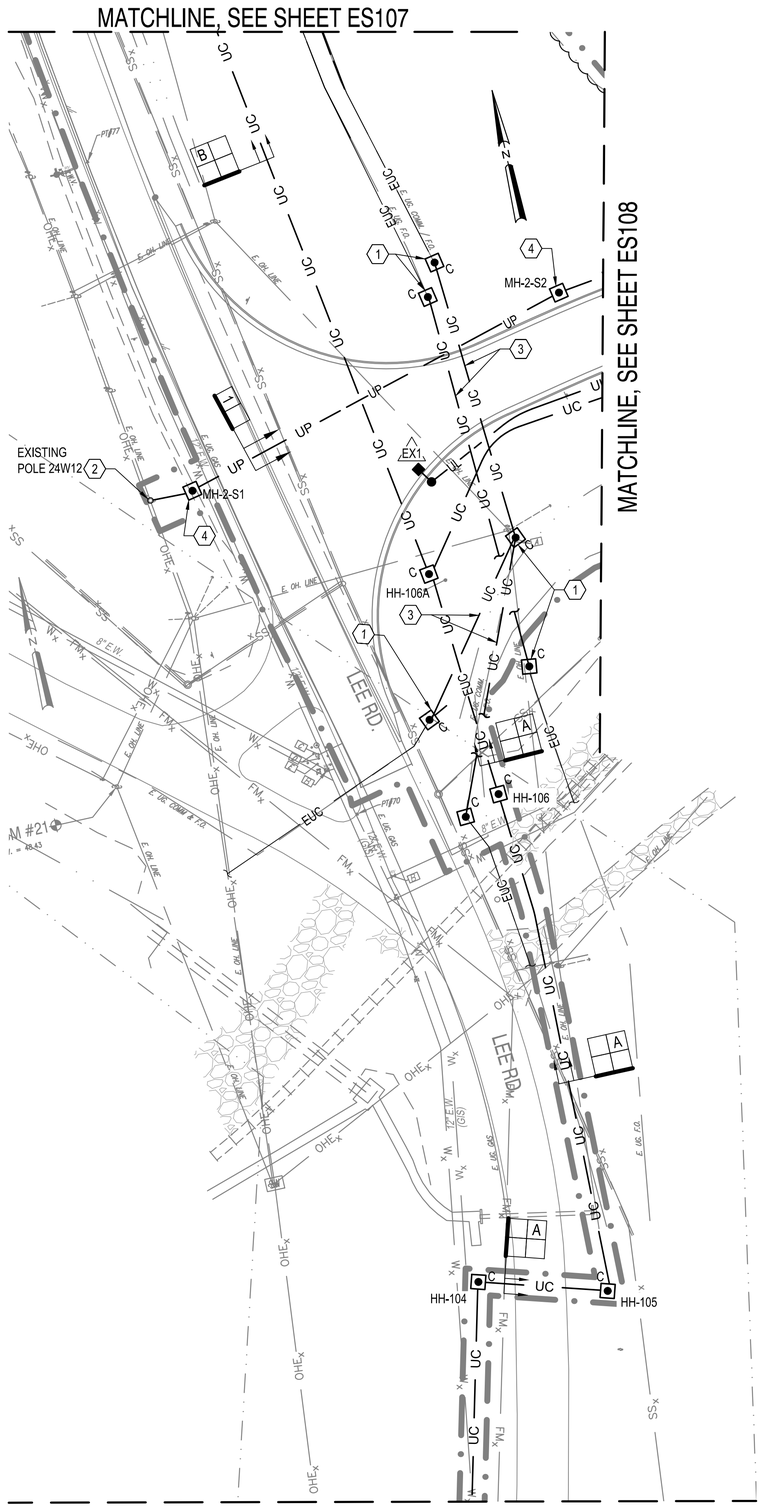


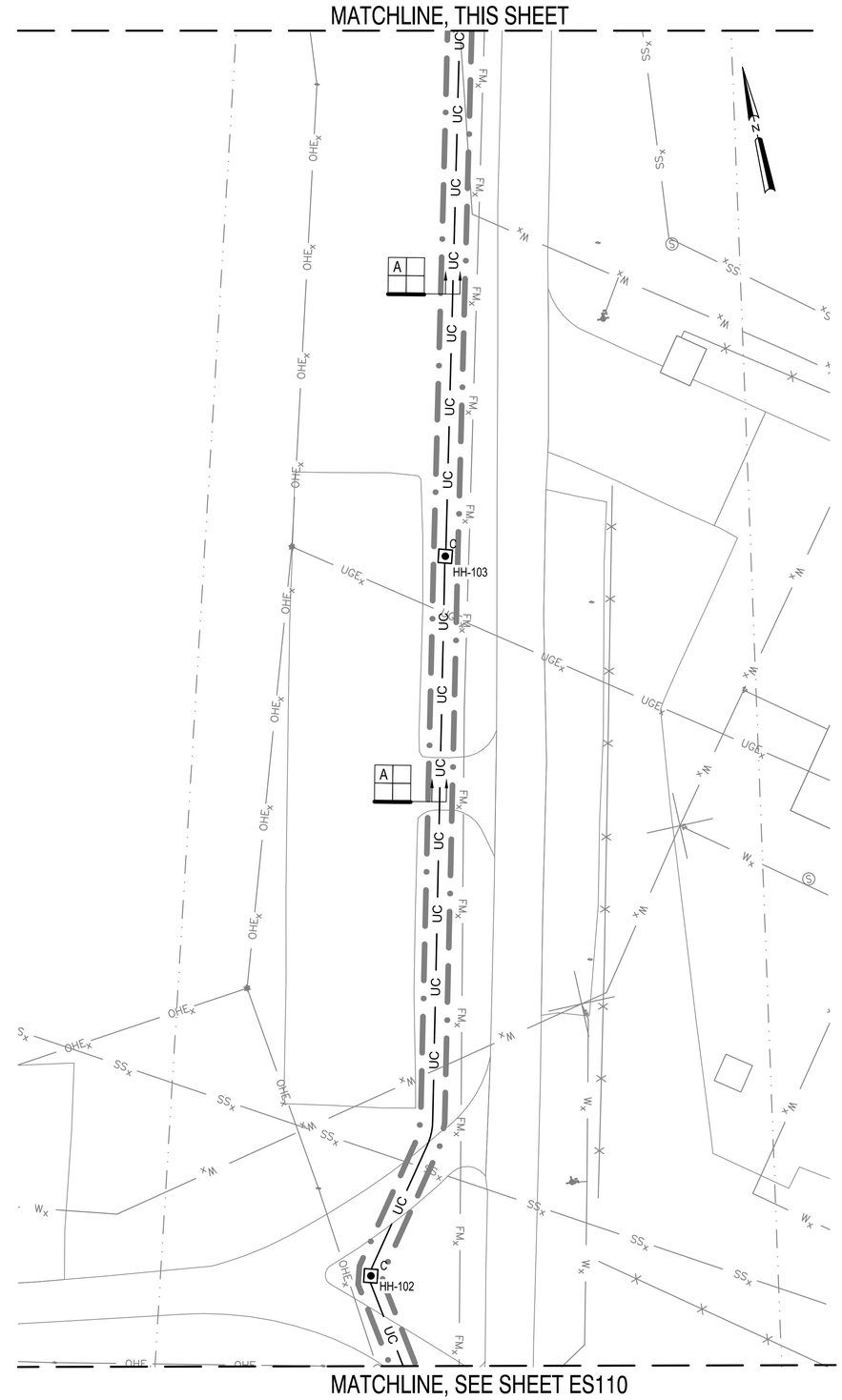


## GENERAL SHEET NOTES

A. LOCATE AND MARK ALL EXISTING UNDERGROUND UTILITIES PRIOR TO EXCAVATION. EXERCISE EXTREME CAUTION TO PREVENT DAMAGE TO EXISTING UTILITIES AND TO PROVIDE MINIMUM CLEARANCE AND COVER.

B. EXERCISE CAUTION WHEN EXCAVATING IN VICINITY OF ELECTRICAL OR COMMUNICATIONS CIRCUITS, CONDUCTORS, CABLING, AND RACEWAYS. IMMEDIATELY NOTIFY CONTRACTING OFFICER OF ANY DAMAGE DONE TO ELECTRICAL OR COMMUNICATION SYSTEMS DURING EXCAVATION AND REPAIR.

C. PRESERVE SURVEY CONTROL POINTS AND RESET ANY CONTROLS DESTROYED OR DISTURBED DUE TO WORK PERFORMED AROUND SURVEY CONTROL POINTS AT NO COST TO THE GOVERNMENT.

D. FIELD VERIFY LOCATION OF EXISTING TELECOM AND FIBER PEDESTALS.

E. PROVIDE SCHEDULE 40 PVC RACEWAYS DIRECT BURIED WITH MIN. 18" COVER IN UNPAVED AREAS FOR SECONDARY ELECTRICAL AND TELECOMMUNICATION DUCTS.

F. MV DUCTBANKS AND SECONDARY ELECTRICAL/COMMUNICATIONS DUCTS RUN UNDER ROADS AND STRUCTURES MUST BE CONCRETE-ENCASED. FOR ALL OTHER CONDUIT RUNS, PROVIDE COVER DEPTHS AS SPECIFIED IN SPECIFICATION 33 71 02.

G. WHERE UNDERGROUND ELECTRICAL AND TELECOMMUNICATION DUCTS CROSS STORM WATER PIPING, RUN DUCTS ABOVE STORM WATER PIPING, UON. PROVIDE MIN. 6" VERTICAL CLEARANCE BETWEEN DUCTS AND STORM WATER PIPING.

H. PROVIDE UNDERGROUND CABLE MARKERS EVERY 500' AND AT BOTH SIDE OF ROAD CROSSINGS ALONG LENGTH OF F.O. RUN. SEE DETAIL A4 ON ES501.

## KEYNOTES

1. PROVIDE TYPE 4 ELECTRICAL TRAFFIC RATED HANDHOLE MINIMUM FOR TELECOM ROUTING. SIZE HANDHOLE TO ACCOMMODATE SPLICES CASES AND SPARE CABLE LENGTH. SEE DETAIL UG-5 ON SHEET ES502.
2. PROVIDE RISER AND FUSED CUTOUTS TO CONNECT TO EXISTING OVERHEAD POWER LINE AND TRANSITION TO UNDERGROUND DUCTBANK. BOND THE GROUNDED NEUTRAL TO THE GROUNDING ELECTRODE SYSTEM AT THE POLE. SEE POLE DETAILS ON ES501 FOR ADDITION INFORMATION.
3. REROUTED COMMUNICATIONS CABLING AS INDICATED ON ED101. SPLICE INTO EXISTING COMMUNICATIONS CABLING AT HANDHOLE. MATCH EXISTING COMMUNICATIONS CABLING AND CONDUIT SIZE. REROUTE COMMUNICATIONS CABLING AS INDICATED. COORDINATE WITH CIVIL PLANS.
4. PROVIDE TYPE 2 ELECTRICAL MANHOLE, SEE DETAIL UG-1 ON SHEET ES502.

## KEYPLAN

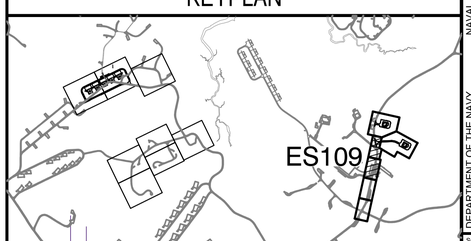


## GRAPHIC SCALE

1"=30'  0'  30'  60'

| MARK | DESCRIPTION | DATE |
|---|---|---|

SEAL

A/E INFO

APPROVED
Jamie E. Christian, P.E.

FOR COMMANDER NAVFAC

ACTIVITY: Approved by LCDR VINCE DEL GRECO, ROICC with PWD YORKTOWN, via Email.

SATISFACTORY TO DATE 03/26/2026

| | | | |
|---|---|---|---|
| DES | CPO | DRW CPO | CHK JDJ |

| | |
|---|---|
| PM/DM | MME/WJW |
| BRANCH MANAGER | WRB |
| CHIEF ENG/ARCH | JWJ |
| FIRE PROTECTION | HPN |

DEPARTMENT OF THE NAVY
NAVAL FACILITIES ENGINEERING SYSTEMS COMMAND
MIDLANT PDC CORE

NAVAL FACILITIES ENGINEERING SYSTEMS COMMAND
NAVAL STATION NORFOLK, VIRGINIA

NAVAL WEAPONS STATION
YORKTOWN, VIRGINIA

P-171 WEAPONS MAGAZINES

ELECTRICAL SITE PLAN - SEGREGATION BUILDING

| | |
|---|---|
| SCALE: | AS SHOWN |
| EPROJECT NO.: | 1737010 |
| CONSTR. CONTR. NO. | ## |
| NAVFAC DRAWING NO. | 12941952 |
| SHEET | 296 OF 499 |

ES109

DRAWFORM REVISION: 14 SEP 2023

FILE NAME: K:\AYorktown\MILCON\2024_1737010_P171_Weapons_Magazines\B_Design\DWGS - MAGAZINE\Sheet\13_ELECP171-1737010-ES109.dwg LAYOUT NAME: ES109 ELECTRICAL SITE PLAN - SEGREGATION BUILDING PLOTTED: Wednesday, April 01, 2026 - 6:21am USER: clayton.obden

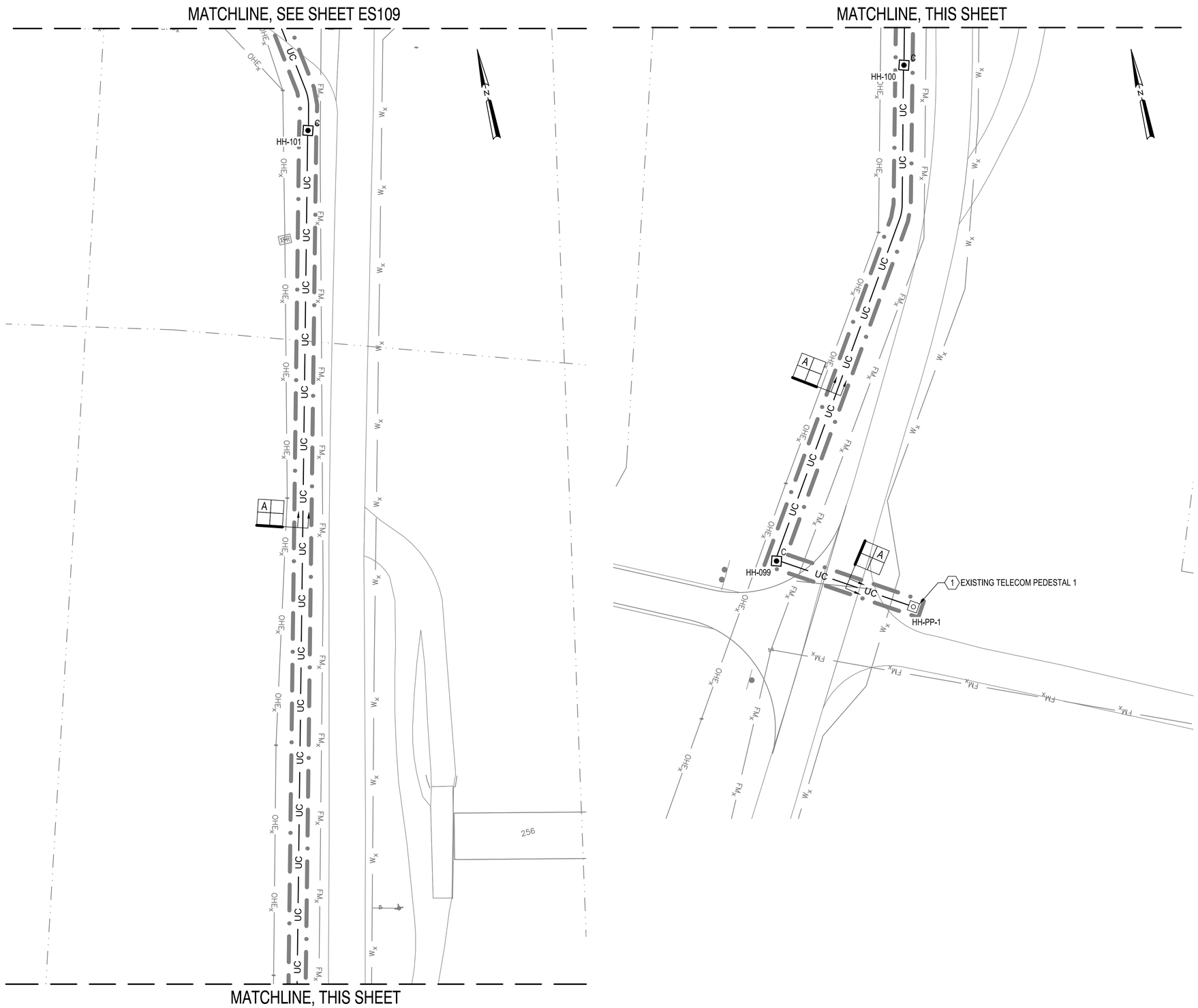


## GENERAL SHEET NOTES

A. LOCATE AND MARK ALL EXISTING UNDERGROUND UTILITIES PRIOR TO EXCAVATION. EXERCISE EXTREME CAUTION TO PREVENT DAMAGE TO EXISTING UTILITIES AND TO PROVIDE MINIMUM CLEARANCE AND COVER.

B. EXERCISE CAUTION WHEN EXCAVATING IN VICINITY OF ELECTRICAL OR COMMUNICATIONS CIRCUITS, CONDUCTORS, CABLING, AND RACEWAYS. IMMEDIATELY NOTIFY CONTRACTING OFFICER OF ANY DAMAGE DONE TO ELECTRICAL OR COMMUNICATION SYSTEMS DURING EXCAVATION AND REPAIR.

C. PRESERVE SURVEY CONTROL POINTS AND RESET ANY CONTROLS DESTROYED OR DISTURBED DUE TO WORK PERFORMED AROUND SURVEY CONTROL POINTS AT NO COST TO THE GOVERNMENT.

D. FIELD VERIFY LOCATION OF EXISTING TELECOM AND FIBER PEDESTALS.

E. PROVIDE SCHEDULE 40 PVC RACEWAYS DIRECT BURIED WITH MIN. 18" COVER IN UNPAVED AREAS FOR SECONDARY ELECTRICAL AND TELECOMMUNICATION DUCTS.

F. PROVIDE CONCRETE ENCASEMENT FOR ALL MV DUCTBANKS AND FOR SECONDARY ELECTRICAL AND TELECOMMUNICATION DUCTS THAT RUN UNDER ROADS AND STRUCTURES. PROVIDE CONDUIT WITH MINIMUM 28" COVER UNDER PAVEMENT AND 18" COVER OTHERWISE AS AS INDICATED IN SECTION 33 71 02 FOR DEPTHS OF ENCASEMENT AND DISTANCE TO EXTEND CASEMENT BEYOND EDGES OF PAVED AREAS, ROADS, AND RAILROAD TRACKS.

G. WHERE UNDERGROUND ELECTRICAL AND TELECOMMUNICATION DUCTS CROSS STORM WATER PIPING, RUN DUCTS ABOVE STORM WATER PIPING, UON. PROVIDE MIN. 6" VERTICAL CLEARANCE BETWEEN DUCTS AND STORM WATER PIPING.

H. PROVIDE UNDERGROUND CABLE MARKERS EVERY 500' AND AT BOTH SIDE OF ROAD CROSSINGS ALONG LENGTH OF F.O. RUN. SEE DETAIL A4 ON ES501.

## KEYNOTES

1. PROVIDE NEW 24 FIBER FDC EQUIPPED WITH 24 SC CONNECTOR PORTS IN EXISTING PEDESTAL 1. JOIN FIRST 12 SM FIBER CABLES TO PORTS 1-12 AND THEN JOIN SECOND 12 SM FIBER CABLES TO PORTS 13-24. STENCIL NEW FDC WITH BUILDING LOCATIONS THAT ARE ASSOCIATED WITH THE FIBER OPTIC CABLE.

## KEYPLAN

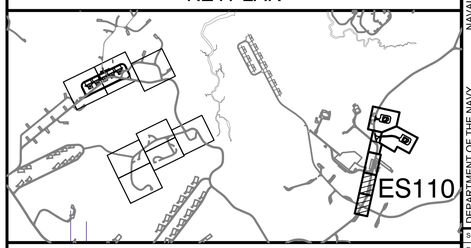


## GRAPHIC SCALE

1"=30' 0' 30' 60'

| MARK | DESCRIPTION | DATE |
|---|---|---|

SEAL

A/E INFO

APPROVED
James E. Donahue, R.A.
FOR COMMANDER NAVFAC

ACTIVITY
Approved by LCDR VINCE DEL GRECO, ROICC with PWD YORKTOWN, via Email.
SATISFACTORY TO DATE 03/26/2026

DES CPO | DRW CPO | CHK JDU
PM/DM MME/WJW
BRANCH MANAGER WRB
CHIEF ENG/ARCH JWJ
FIRE PROTECTION HPN

DEPARTMENT OF THE NAVY
NAVAL FACILITIES ENGINEERING SYSTEMS COMMAND
MIDLANT PDC CORE

NAVAL FACILITIES ENGINEERING SYSTEMS COMMAND
NAVAL STATION NORFOLK, VIRGINIA
YORKTOWN, VIRGINIA
NAVAL WEAPONS STATION
P-171 WEAPONS MAGAZINES

# ELECTRICAL SITE PLAN - SEGREGATION BUILDING

SCALE: AS SHOWN
EPROJECT NO.: 1737010
CONSTR. CONTR. NO. ##
NAVFAC DRAWING NO. 12941953
SHEET 297 OF 499
ES110

DRAWFORM REVISION: 14 SEP 2023

FILE NAME: K:\AYorktown\MILCON\2024_1737010_P171_Weapons_Magazines\B_Design\DWGS_MAGAZINE\Sheet\13_ELEC\P171-1737010-ES110.dwg LAYOUT NAME: ES110 ELECTRICAL SITE PLAN - SEGREGATION BUILDING PLOTTED: Tuesday, March 31, 2026 - 7:19am USER: dayton.obrien

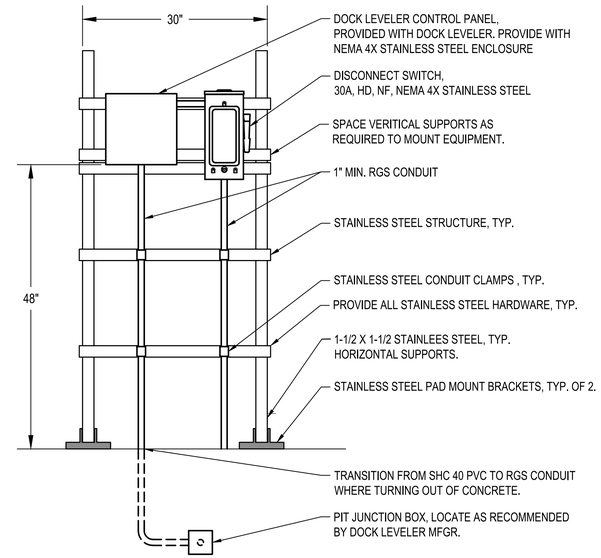


## C3 EQUIPMENT RACK

SCALE: NONE

ES401

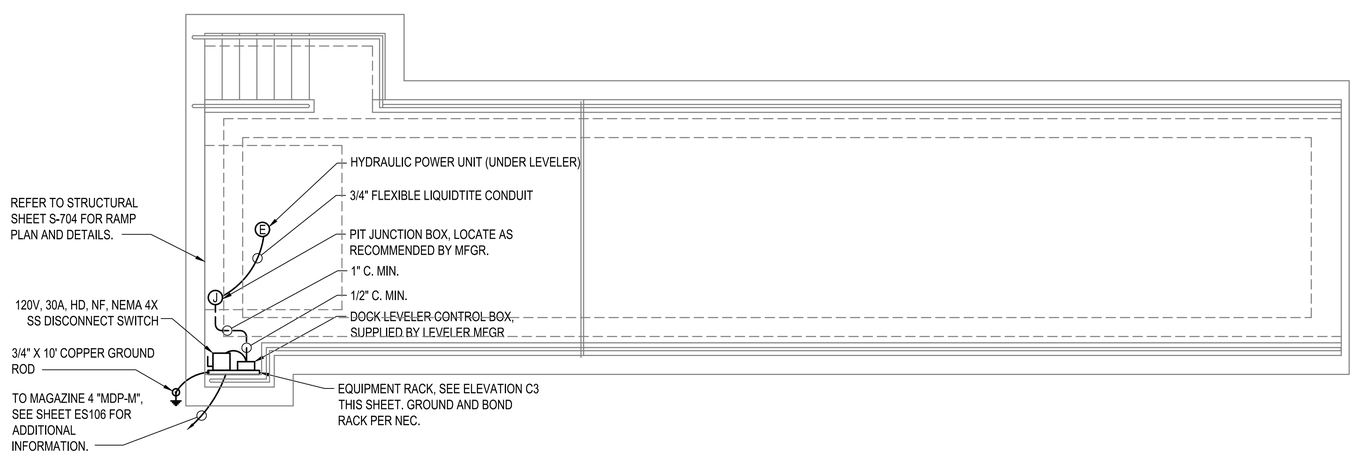


## A1 FORKLIFT LOADING RAMP

SCALE: 1/4" = 1'-0"

ES106

## KEYNOTES

1. HYDRAULIC POWER UNITE (UNDER LEVELER)
2. 3/4" FLEXIBLE LIQUIDTITE CONDUIT.
3. PIT JUNCTION BOX, LOCATE AS RECOMMENDED BY MANUFACTURER.
4. 1"C MINIMUM.
5. 1/2"C MINIMUM.
6. 120V, 30A, 2P, HEAVY DUTY, NF, NEMA 4X STAINLESS STEEL DISCONNECT SWITCH.
7. DOCK LEVELER CONTROL BOX, SUPPLIED BY LEVELER MANUFACTURER.
8. EQUIPMENT RACK, SEE ELEVATION B3/ES401. GROUND AND BOND RACK PER NEC.
9. GROUND ROD TO PANELBOARD, SEE ES SHEETS.

## GRAPHIC SCALE

1/4"=1'-0"  0' 2' 4' 8'

| MARK | DESCRIPTION | DATE |
|---|---|---|

SEAL

A/E INFO

APPROVED
(Name of Officer or A.E.)

FOR COMMANDER NAVFAC

ACTIVITY
Approved by LCDR VINCE DEL GRECO, ROICC with PWD YORKTOWN, via Email.

SATISFACTORY TO DATE 03/26/2026

DES CPO | DRW CPO | CHK JDU

PM/DM MME/WJW

BRANCH MANAGER WRB

CHIEF ENG/ARCH JWJ

FIRE PROTECTION HPN

DEPARTMENT OF THE NAVY
NAVAL FACILITIES ENGINEERING SYSTEMS COMMAND
MIDLANT PDC CORE

NAVAL FACILITIES ENGINEERING SYSTEMS COMMAND
NAVAL STATION NORFOLK, VIRGINIA

NAVAL WEAPONS STATION
YORKTOWN, VIRGINIA

P-171 WEAPONS MAGAZINES

ENLARGED PLAN - FORKLIFT LOADING RAMP

SCALE: AS SHOWN

EPROJECT NO.: 1737010

CONSTR. CONTR. NO. ##

NAVFAC DRAWING NO. 12941954

SHEET 298 OF 499

ES401

DRAWFORM REVISION: 14 SEP 2023

FILE NAME: K:\NAYorktownMILCON\2024_1737010_P171_Weapons_Magazines\B_Design\DWGS - MAGAZINE\Sheet13_ELEC\P171-1737010-ES401.dwg LAYOUT NAME: P171-1737010-ES401 PLOTTED: Tuesday, March 31, 2026 - 7:19am USER: dayton.cobden

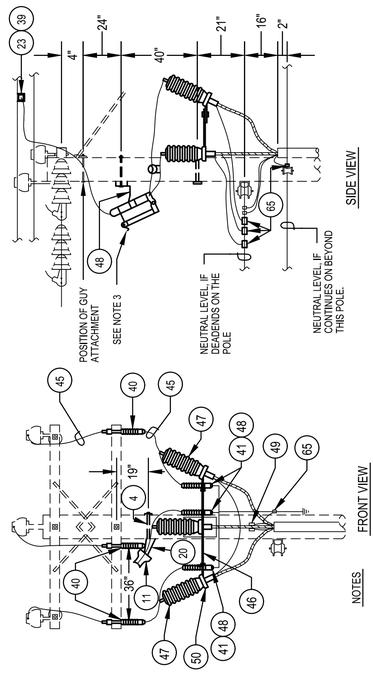


NOTES

1. MODIFY POSITION OF TERMINAL ON DEADENDS TO BE UNDER THE CONDUCTORS AND THE CUTOUTS ON THE BACKSIDE OF CROSSARM. POLE RISER MUST BE OFFSET TO CLEAR NEUTRAL CLEVIS BRACKET.
2. CONNECT BOTTOM LEAD OF ARRESTER DIRECTLY TO POLE GROUND. INTERCONNECT CABLE INSULATION SHIELD DRAIN WIRES AND CONDUIT RISER GROUND TO MULTI-GROUNDED NEUTRAL (IF EXISTING) AND POLE GROUND.
3. CUTOUT PROVIDES A FUSE OR A SOLID BLADE (NON-FUSED) OPTION. COORDINATE WITH SPECIFIC DESIGN REQUIREMENTS PROVIDED.

U.G. TERMINAL
(0-25KV)

| SKETCH DATE | JUNE 2002 | STYLE | OH-31 |
|---|---|---|---|

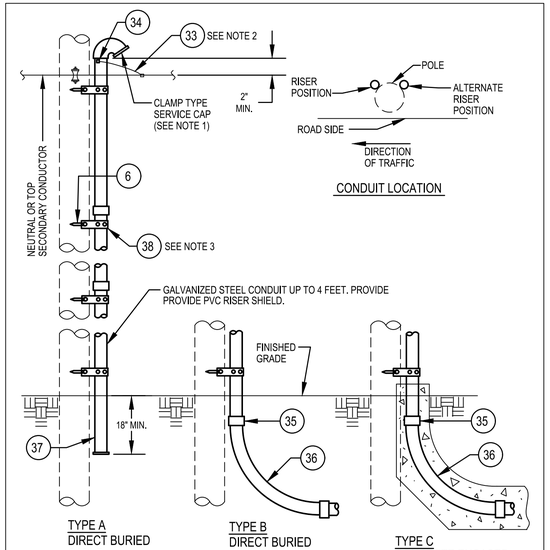


NOTES

1. ON CONDUIT RISER FOR PRIMARY CIRCUITS, ELIMINATE SERVICE CAP AND PROVIDE GROUNDING TYPE INSULATING BUSHING.
2. BOND CONDUIT TO POLE GROUND AND SYSTEM NEUTRAL (IF EXISTING). SEE GROUNDING NOTES ON SKETCH OH-41.
3. SPACE STRAPS AT MAXIMUM OF 4' INTERVALS.

CONDUIT RISER
(SIZE & TYPE AS INDICATED)

| SKETCH DATE | JUNE 2002 | STYLE | OH-35 |
|---|---|---|---|

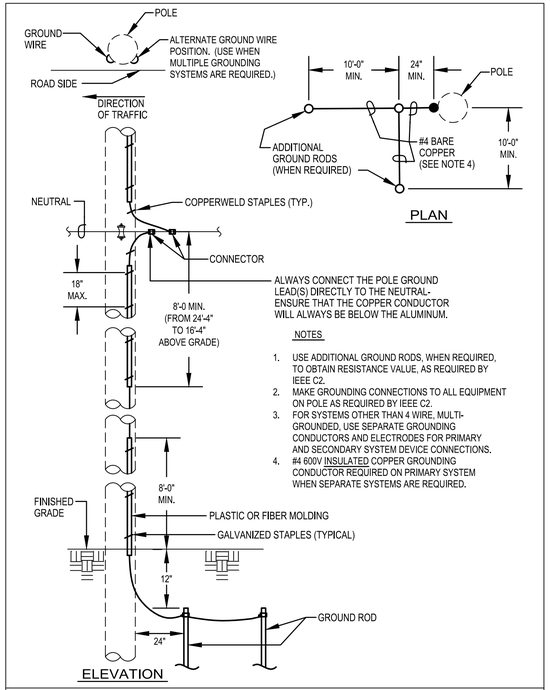


ALWAYS CONNECT THE POLE GROUND LEAD(S) DIRECTLY TO THE NEUTRAL. ENSURE THAT THE COPPER CONDUCTOR WILL ALWAYS BE BELOW THE ALUMINUM.

NOTES

1. USE ADDITIONAL GROUND RODS, WHEN REQUIRED, TO OBTAIN RESISTANCE VALUE, AS REQUIRED BY IEEE C2.
2. MAKE GROUNDING CONNECTIONS TO ALL EQUIPMENT ON POLE AS REQUIRED BY IEEE C2.
3. FOR SYSTEMS OTHER THAN 4 WIRE, MULTI-GROUNDED, USE SEPARATE GROUNDING CONDUCTORS AND ELECTRODES FOR PRIMARY AND SECONDARY SYSTEM DEVICE CONNECTIONS.
4. #4 600V INSULATED COPPER GROUNDING CONDUCTOR REQUIRED ON PRIMARY SYSTEM WHEN SEPARATE SYSTEMS ARE REQUIRED.

GROUND

| SKETCH DATE | JUNE 2002 | STYLE | OH-41 |
|---|---|---|---|

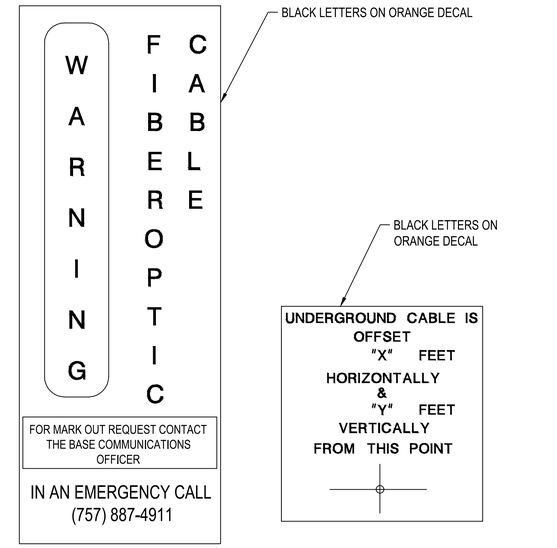


## C5 FIBER OPTIC WARNING MARKER LABEL

NOT TO SCALE

POLE LINE MATERIAL LIST

1. FLAT STEEL BRACE (TWO PIECES)
2. MACHINE BOLT, 3/8" X LENGTH NEEDED WITH WASHER, NUT AND LOCKWASHER
3. 8' WOOD CROSSARM WITH CROSS SECTION DIMENSIONS OF 3 1/2" X 4 1/2"
4. MACHINE BOLT, 5/8" X LENGTH NEEDED WITH WASHER, NUT AND LOCKWASHER
5. TIMBER CONNECTOR
6. LAGSCREW, 1/2" X 4"
7. ANGLE STEEL BRACE (TWO PIECES)
8. MACHINE BOLT, 1/2" X LENGTH NEEDED, WITH WASHER, NUT & LOCKWASHER
9. DEADEND BOX
10. STEEL PIN
11. PIN INSULATOR
12. GRID GAIN, USED ONLY WHEN THERE IS NO POLE GAIN
13. ANGLE STEEL BRACE (ONE PIECE)
14. 10' WOOD CROSSARM WITH CROSS SECTION DIMENSIONS OF 3 1/2" X 4 1/2"
15. 5/8" EYE NUT
16. 5/8" EYE BOLT, LENGTH AS NEEDED, WITH WASHER, NUT & LOCKWASHER
17. EXTENSION LINK
18. BELL TYPE SUSPENSION INSULATOR WITH CONNECTING HARDWARE
19. STRAIN CLAMP
20. STEEL ANGLE PIN
21. CLUSTER MOUNTING BRACKET, STEEL
22. TRANSFORMER GROUNDING CONNECTION
23. STIRRUP
24. SECONDARY LEAD SUPPORT BRACKET
25. ADAPTER PLATE FOR CLUSTER MOUNTING
26. CLEVIS BRACKET FOR SPOOL INSULATOR
27. SPOOL INSULATOR
28. U BOLT CLAMP
29. PREFORMED GUY GRIP
30. GUY HOOK
31. GUY STRAIN INSULATOR
32. GUY WIRE, SIZE AS SPECIFIED
33. #4 WP CU, SOFT DRAWN GROUND WIRE
34. GROUND CLAMP
35. CONDUIT COUPLING
36. CONDUIT BEND
37. INSULATED BUSHING
38. PERFORATED STRAPPING, 1-1/2" WIDE
39. HOT LINE CLAMP
40. FUSED CUTOUT, AS SPECIFIED
41. SURGE ARRESTER, AS SPECIFIED
42. POLE TOP PIN (RIDGE PIN) - 24 INCHES LONG
43. CROSSARM ANGLE PIN
44. ANGLE POLE TOP PIN
45. WEATHERPROOF SOFT DRAWN WIRE-SIZE
    (a) T0 MATCH OR EXCEED AMPACITY OF CONNECTING CABLE, OR
    (b) AT 125% OF TRANSFORMER FULL LOAD CURRENT, BUT NOT LESS THAN NO. 4 AWG

POLE LINE MATERIAL LIST

| SKETCH DATE | JUNE 2002 | STYLE | OH-1.5 |
|---|---|---|---|

POLE LINE MATERIAL LIST

46. TRI-MOUNT BRACKET
47. TERMINATOR
48. MOUNTING BRACKET
49. CABLE GRIP HANGER
50. HOSE CLAMP
51. STUD, 3/4" X 1-3/4"
52. LINE POST INSULATOR
53. TRIPLE INSULATOR BRACKET
54. ANGLE CLAMP
55. INSULATOR, LINE POST CLAMP
56. 4' CROSSARM
57. CROSSARM GAIN BRACKET
58. PULLEY BRACKET
59. WEDGE CLAMP
60. MIDSPAN SERVICE CLAMP
61. STUD, 7"
62. SADDLE, ANGLE
63. SADDLE CROSSARM
64. FITTING, POLE TOP
65. CONNECTOR
66. SUSPENSION CLAMP
67. TIE, SERVICE CABLE
68. 54" FIBERGLASS STRAIN INSULATOR
69. PVC RISER SHIELD
70. PVC EXTENSION SHIELD
71. PVC BACK PLATE
72. 8' WOOD CROSSARM WITH CROSS SECTION DIMENSIONS OF 4 3/4" X 5 3/4"
73. 10' WOOD CROSSARM WITH CROSS SECTION DIMENSIONS OF 4 3/4" X 5 3/4"
74. BACK-UP CURRENT LIMITING FUSE

POLE LINE MATERIAL LIST

| SKETCH DATE | JUNE 2002 | STYLE | OH-1.5A |
|---|---|---|---|

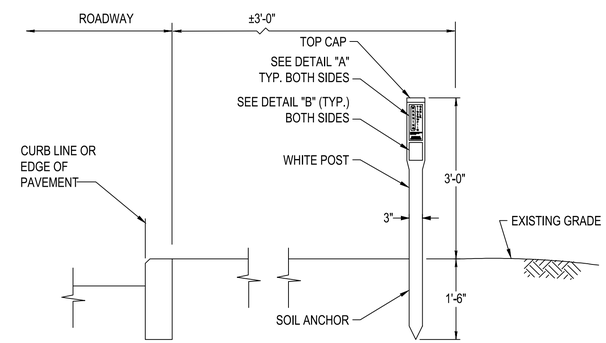


FIBER OPTIC CABLE MARKER
SPACE MARKERS 500' APART AND ON EACH SIDE OF ROAD CROSSINGS

## A4 FIBER OPTIC WARNING MARKER LABEL

NOT TO SCALE

| MARK | DESCRIPTION | DATE |
|---|---|---|

NAVFAC

A/E INFO

APPROVED
James E. Donahue, P.E.
FOR COMMANDER NAVFAC

ACTIVITY
Approved by LCDR VINCE DEL GRECO, ROICC with PWD YORKTOWN, via Email.
SATISFACTORY TO DATE 03/26/2026

DES CPO | DRW CPO | CHK JDU
PM/DM MME/WJW
BRANCH MANAGER WRB
CHIEF ENG/ARCH JWJ
FIRE PROTECTION HPN

DEPARTMENT OF THE NAVY
NAVAL FACILITIES ENGINEERING SYSTEMS COMMAND
MIDLANT PDC CORE
NAVAL FACILITIES ENGINEERING SYSTEMS COMMAND
NAVAL STATION NORFOLK, VIRGINIA
NAVAL WEAPONS STATION
YORKTOWN, VIRGINIA
P-171 WEAPONS MAGAZINES
ELECTRICAL SITE DETAILS

SCALE: NONE
EPROJECT NO.: 1737010
CONSTR. CONTR. NO. ##
NAVFAC DRAWING NO. 12941955
SHEET 299 OF 499
ES501

DRAWFORM REVISION: 14 SEP 2023

FILE NAME: K:\AYorktown\MILCON\2024_1737010_P-171_Weapons_Magazines\B_Design\DWGS - MAGAZINE\Sheet\13_ELECP171-1737010-ES501.dwg LAYOUT NAME: ES501 ELECTRICAL SITE DETAILS PLOTTED: Tuesday, March 31, 2026 - 7:19am USER: dayton.obrien

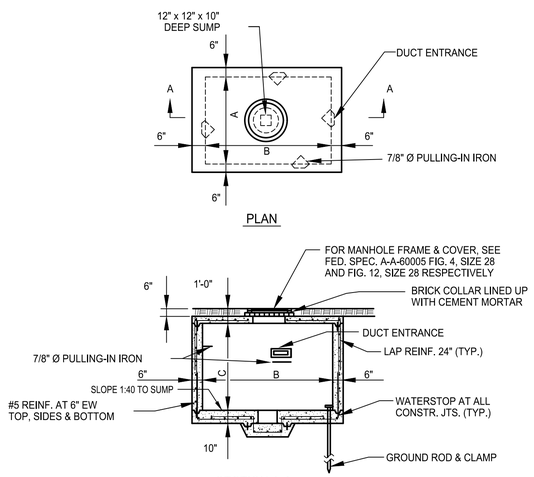


NOTES:

1. FOR DETAILS OF CABLE RACKS, DUCT ENTRANCE AND PULLING-IN IRONS, SEE PLATE UG-7.
2. MINIMUM CONCRETE COMPRESSIVE STRENGTH MUST BE 3000 PSI.

| MANHOLE DIMENSIONS (mm) | | | |
|---|---|---|---|
| TYPE | A | B | C (AT HIGH PT.) |
| 1 | 6'-0" | 6'-0" | 6'-6" |
| 2 | 6'-0" | 8'-0" | 6'-6" |

STANDARD ELECTRICAL MANHOLE (NONTRAFFIC)
TYPES 1 & 2

SKETCH DATE JUNE 2002 STYLE UG-1

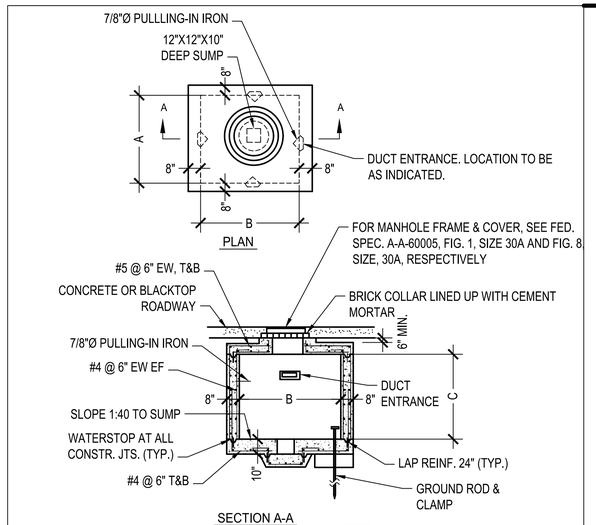


NOTES:

1. MANHOLE AND COVERS ARE DESIGNED FOR MAXIMUM WHEEL LOAD IN ACCORDANCE WITH AASHTO HS20-44.
2. FOR DETAILS OF CABLE RACKS, DUCT ENTRANCE AND PULLING-IN IRONS, SEE PLATE UG-7.
3. MINIMUM CONCRETE COMPRESSIVE STRENGTH MUST BE 3000 PSI.

| MANHOLE DIMENSIONS | | | |
|---|---|---|---|
| TYPE | A | B | C (AT HIGH PT.) |
| 3 | 6'-0" | 6'-0" | 6'-6" |
| 4 | 6'-0" | 8'-0" | 6'-6" |

STANDARD ELECTRICAL MANHOLE (TRAFFIC)
TYPES 3 & 4

SKETCH DATE JUNE 2002 STYLE UG-2

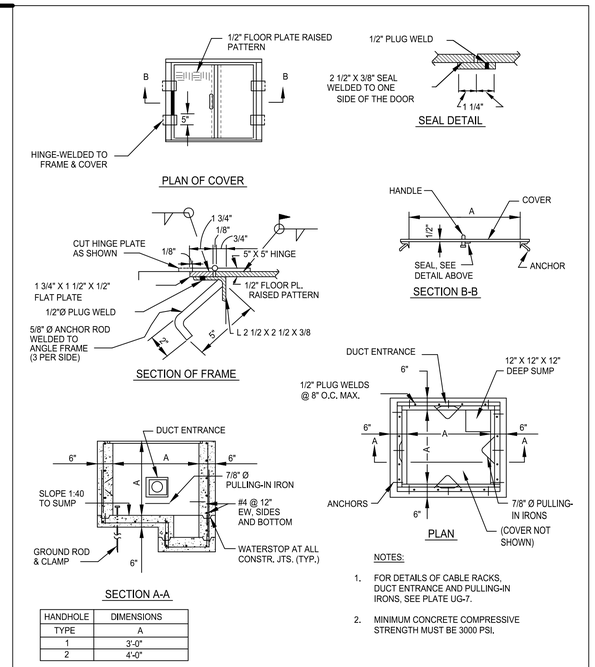


| HANDHOLE | DIMENSIONS |
|---|---|
| TYPE | A |
| 1 | 3'-0" |
| 2 | 4'-0" |

NOTES:

1. FOR DETAILS OF CABLE RACKS, DUCT ENTRANCE AND PULLING-IN IRONS, SEE PLATE UG-7.
2. MINIMUM CONCRETE COMPRESSIVE STRENGTH MUST BE 3000 PSI.

STANDARD ELECTRICAL HANDHOLE (NONTRAFFIC)
TYPES 1 & 2

SKETCH DATE JUNE 2002 STYLE UG-4

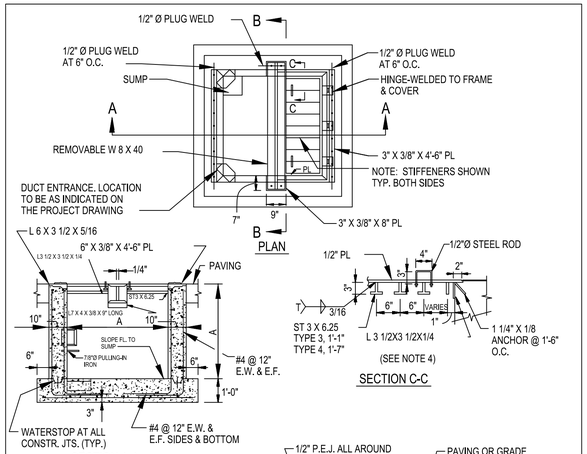


NOTES:

1. ENTRANCE OF DUCTS INTO HANDHOLE MAY BE MADE ON SIDE FACES OR CORNERS AS REQUIRED.
2. FOR DETAILS OF CABLE RACKS, DUCT ENTRANCE AND PULLING-IN IRONS, SEE PLATE UG-7.
3. HANDHOLE AND COVER IS DESIGNED FOR MAXIMUM SINGLE WHEEL LOAD OF 50,000 LB. OR DUAL WHEEL LOAD OF 90,000 LB.
4. COVER SHALL BE MADE OF STRUCTURAL STEEL CONFORMING TO ASTM A 36/A 36M.
5. MINIMUM COMPRESSIVE STRENGTH OF CONCRETE SHALL BE 3000 PSI.

| HANDHOLE | DIMENSIONS |
|---|---|
| TYPE | A |
| 3 | 3'-0" |
| 4 | 4'-0" |

STANDARD ELECTRICAL HANDHOLE (TRAFFIC/AIRFIELD)
TYPES 3 & 4

SKETCH DATE JUNE 2003 STYLE UG-5

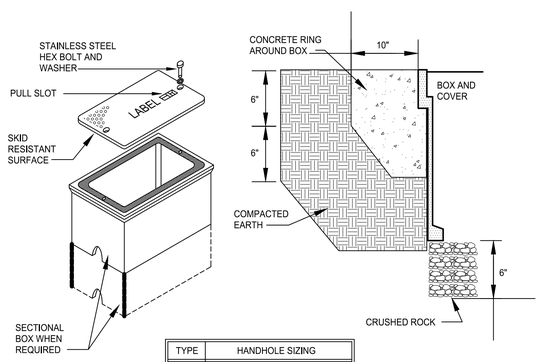


| TYPE | HANDHOLE SIZING |
|---|---|
| 5 | 12" X 12" X 24" DEEP |
| 6 | 12" X 18" X 24" DEEP |
| 7 | 12" X 24" X 24" DEEP |
| 8 | 24" X 36" X 24" DEEP |
| 9 | 30" X 48" X 24" DEEP |

HANDHOLE REQUIREMENTS

1. HOUSING MUST BE A POLYMER CONCRETE REINFORCED WITH A HEAVY WEAVE FIBERGLASS REINFORCING WITH COMPRESSIVE STRENGTH OF NO LESS THAN 10,000 PSI.
2. COVER AND BOX MUST WITHSTAND A SERVICE LOAD OF NO LESS THAN 15,000 LBS OVER A 10" x 10" AREA.
3. PROVIDE STAINLESS STEEL BOLTS AND INSERTS.
4. PROVIDE WITH (2) 2 1/2" MOUSEHOLES.
5. PROVIDE LABEL "ELECTRICAL" FOR POWER HANDHOLES OR "TELEPHONE" FOR TELEPHONE HANDHOLES, OR AS INDICATED.

STANDARD ELECTRICAL HANDHOLE (NONTRAFFIC)
(COMPOSITE/FIBERGLASS) TYPES 5, 6, 7, 8 & 9

SKETCH DATE JUNE 2002 STYLE UG-6

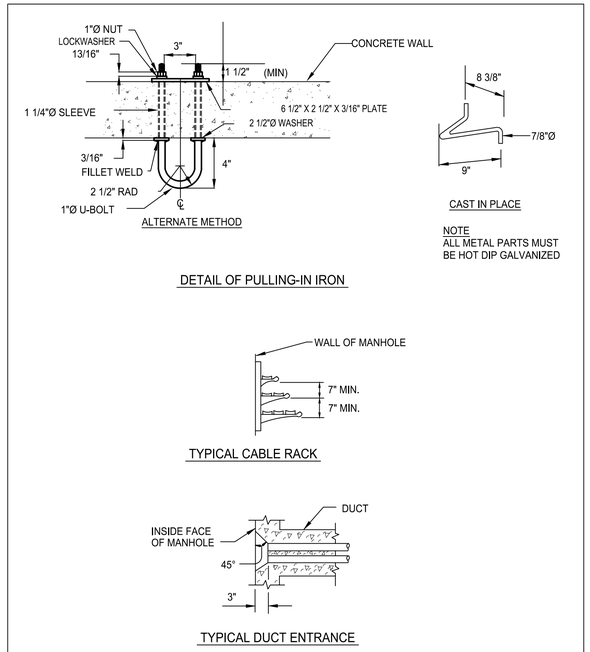


DETAILS
(PULLING-IN IRONS, CABLE RACK AND DUCT ENTRANCE)

SKETCH DATE JUNE 2002 STYLE UG-7

| MARK | DESCRIPTION | DATE |
|---|---|---|

NAVFAC

SEAL

A/E INFO

APPROVED
FOR COMMANDER NAVFAC

ACTIVITY
Approved by LCDR VINCE DEL GRECO, ROICC with PWD YORKTOWN, via Email.
SATISFACTORY TO DATE 03/26/2026

| | | | |
|---|---|---|---|
| DES | CPO | DRW CPO | CHK JDJ |
| PM/DM | MME/WJW | | |
| BRANCH MANAGER | WRB | | |
| CHIEF ENG/ARCH | JWJ | | |
| FIRE PROTECTION | HPN | | |

DEPARTMENT OF THE NAVY
NAVAL FACILITIES ENGINEERING SYSTEMS COMMAND
MIDLANT PDC CORE
NAVAL FACILITIES ENGINEERING SYSTEMS COMMAND
NAVAL STATION NORFOLK, VIRGINIA
NAVAL WEAPONS STATION
YORKTOWN, VIRGINIA
P-171 WEAPONS MAGAZINES
ELECTRICAL SITE DETAILS

SCALE: NONE
EPROJECT NO.: 1737010
CONSTR. CONTR. NO. ##
NAVFAC DRAWING NO. 12941956
SHEET 300 OF 499
ES502
DRAWFORM REVISION: 14 SEP 2023

FILE NAME: K:\NAVYorktown\MLCON\2024_1737010_P171_Weapons_Magazines\B_Design\DWGS - MAGAZINE\Sheet13_ELEC\P171-1737010-ES502.dwg LAYOUT NAME: ES502 ELECTRICAL SITE DETAILS PLOTTED: Tuesday, March 31, 2026 - 7:19am USER: dayton.obrien

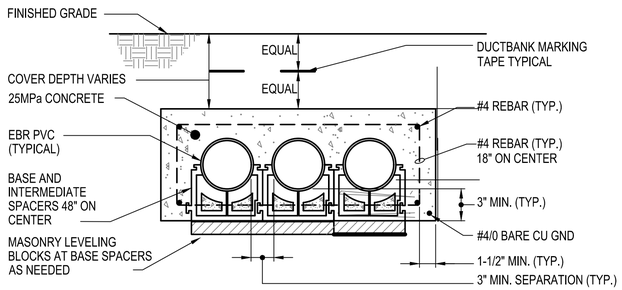


## D1 3 - WAY CONCRETE ENCASED DUCTBANK DETAIL

SCALE: NONE

GENERAL CONCRETE ENCASED DUCTBANK NOTES:

1. GEOTECH TEST, IN ACCORD WITH ASTM D698, THE BOTTOM OF EXCAVATION TO ACHIEVE 85% TO 95% OF MAXIMUM DRY DENSITY, PRIOR TO CONCRETE PLACEMENT.

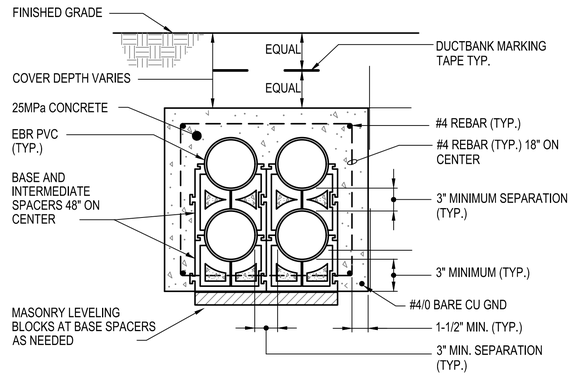


## D2 4 - WAY CONCRETE ENCASED DUCTBANK DETAIL

SCALE: NONE

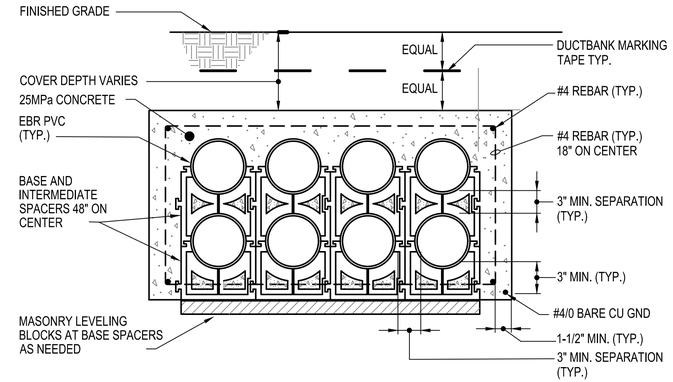


## D4 8 - WAY CONCRETE ENCASED DUCTBANK DETAIL

SCALE: NONE

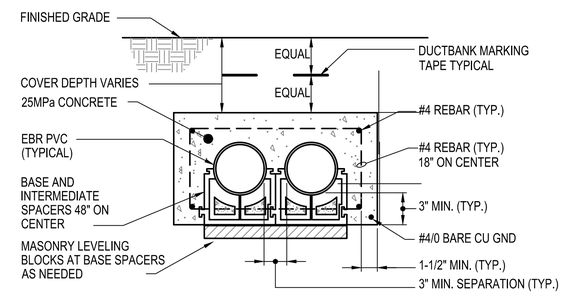


## B1 2 - WAY CONCRETE ENCASED DUCTBANK DETAIL

SCALE: NONE

GENERAL CONCRETE ENCASED DUCTBANK NOTES:

1. GEOTECH TEST, IN ACCORD WITH ASTM D698, THE BOTTOM OF EXCAVATION TO ACHIEVE 85% TO 95% OF MAXIMUM DRY DENSITY, PRIOR TO CONCRETE PLACEMENT.

## EXTERIOR LUMINAIRE SCHEDULE

| LUMINAIRE TYPE | PLATE OR DETAIL | DESCRIPTION | LAMP | LUMENS | WATTS | VOLTAGE | MOUNTING | POLE TYPE | NOTES |
|---|---|---|---|---|---|---|---|---|---|
| EX1 | XL-2 | LED AREA LUMINAIRE, DARK BRONZE FINISH | LED | 6500 LM | 65W | 277V | POLE MTD @ 25'-0" AFG | XL-19, TYPE C | 2, 3, 4 |
| EX2 | XL-2 | LED AREA LUMINAIRE, DARK BRONZE FINISH | LED | 6500 LM | 65W | 277V | POLE MTD @ 25'-0" AFG | XL-19, TYPE C | 1, 2, 3 |

EXTERIOR LUMINAIRE SCHEDULE GENERAL NOTES:

A. PROVIDE LUMINAIRES WITH 4000K CORRELATED COLOR TEMPERATURE.

EXTERIOR LUMINAIRE SCHEDULE NOTES:

1. PROVIDE LUMINAIRE WITH MOTION SENSOR WITH INTEGRAL PHOTOCELL. SENSOR MUST DIM TO 30% LUMEN OUTPUT WHEN NO MOTION IS SENSED AND PROVIDE DUSK-TO-DAWN CAPABILITIES.
2. PROVIDE LUMINAIRE WITH TYPE II MEDIUM DISTRIBUTION, UON.
3. LUMINAIRE MUST BE DARK SKY COMPLIANT.
4. PROVIDE DUSK-TO-DAWN CAPABILITIES.

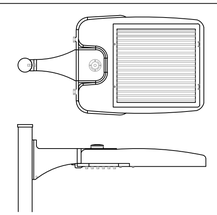

NOTE: THIS SKETCH IS A NON-PROPRIETARY GRAPHIC REPRESENTATION OF A LUMINAIRE THAT MAY MEET THE SPECIFICATION REQUIREMENTS. IT IS NOT INTENDED TO INDICATE A CERTAIN MANUFACTURER OR PREFERENCE.

LUMINAIRE REQUIREMENTS:

1. HOUSING - DIE-CAST ALUMINUM HOUSING WITH POWDER COAT FINISH.
2. OPTICS - INJECTION MOLDED OPTICS WITH TYPE I, II, III, IV, OR V DISTRIBUTIONS. BUG UPLIGHT RATING OF U0, WITH GLARE RATING AS DETERMINED BY LIGHTING ZONE INSTALLED.
3. LIGHT SOURCE - SOLID STATE LEDS, 3000K CCT UON, MINIMUM 70 CRI UON, AND MINIMUM EFFICACY OF 100 LUMENS/WATT UON. INITIAL LUMEN OUTPUT AS INDICATED IN LUMINAIRE SCHEDULE.
4. DRIVER - REPLACEABLE, INTEGRAL, HIGH-EFFICIENCY DIMMABLE DRIVER WITH MINIMUM 0.9 PF, OPERATING VOLTAGE OF 120-277V, THERMAL MANAGEMENT, AND < 20% THD. ON-OFF CONTROL AND FULLY DIMMABLE DOWN TO 10% MINIMUM OR AS INDICATED IN LUMINAIRE SCHEDULE. MEETS ELEVATED 10KV/10KA REQUIREMENTS PER IEEE.
5. CERTIFICATION - UL LISTED FOR WET LOCATION, ROHS COMPLIANT. COMPLIES WITH IES LM79, LM80 AND TM21 TESTING STANDARDS.
6. MOUNTING - ARM-MOUNTED ON POLE.
7. OPTIONS - MOUNTING ARM LENGTH, LIGHT DISTRIBUTION, HOUSE-SIDE SHIELD, PHOTOCELL, INTEGRAL MOTION SENSOR, AND ANSI 7-PIN RECEPTACLE.

### LED AREA LUMINAIRE

REVISED: NOVEMBER 2020 | LUMINAIRE PLATE: XL-2

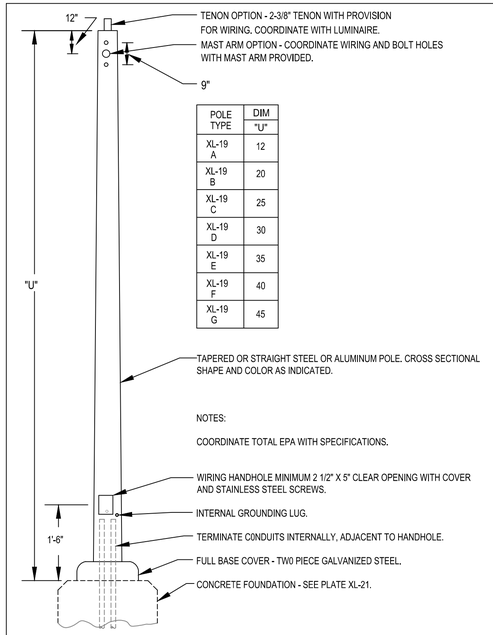


| POLE TYPE | DIM "U" |
|---|---|
| XL-19 A | 12 |
| XL-19 B | 20 |
| XL-19 C | 25 |
| XL-19 D | 30 |
| XL-19 E | 35 |
| XL-19 F | 40 |
| XL-19 G | 45 |

NOTES:

COORDINATE TOTAL EPA WITH SPECIFICATIONS.

### ANCHOR BASE STEEL/ALUMINUM POLE

REVISED: NOVEMBER 2020 | LUMINAIRE PLATE: XL-19

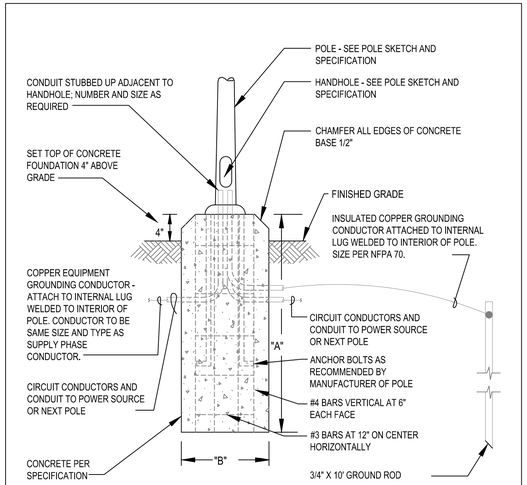


| POLE HEIGHT | A | B |
|---|---|---|
| 8'-12' | 36" | 12" |
| 13'-20' | 42" | 16" |
| 21'-30' | 72" | 24" |
| 31'-40' | 78" | 30" |

### ANCHOR BASE POLE FOUNDATION

REVISED: NOVEMBER 2020 | LUMINAIRE PLATE: XL-21

| MARK | DESCRIPTION | DATE |
|---|---|---|

SEAL

A/E INFO

APPROVED
Jamie E. Donahue, R.A.
FOR COMMANDER NAVFAC

ACTIVITY
Approved by LCDR VINCE DEL GRECO, ROICC with PWD YORKTOWN, via Email.
SATISFACTORY TO DATE 03/26/2026

| DES | DRW | CHK |
|---|---|---|
| CPO | CPO | JDU |

| | |
|---|---|
| PM/DM | MME/WJW |
| BRANCH MANAGER | WRB |
| CHIEF ENG/ARCH | JWJ |
| FIRE PROTECTION | HPN |

DEPARTMENT OF THE NAVY
NAVAL FACILITIES ENGINEERING SYSTEMS COMMAND
MIDLANT PDC CORE
NAVAL FACILITIES ENGINEERING SYSTEMS COMMAND
NAVAL STATION NORFOLK, VIRGINIA
NAVAL WEAPONS STATION
YORKTOWN, VIRGINIA
P-171 WEAPONS MAGAZINES
ELECTRICAL SITE DETAILS

SCALE: NONE
EPROJECT NO.: 1737010
CONSTR. CONTR. NO. ##
NAVFAC DRAWING NO. 12941957
SHEET 301 OF 499

ES503

DRAWFORM REVISION: 14 SEP 2023

FILE NAME: K:\VA\Yorktown\MILCON\2024_1737010_P171_Weapons_Magazines\8_Design\DWGS - MAGAZINES\Sheet\13_ELEC\P171-1737010-ES503.dwg LAYOUT NAME: ES503 ELECTRICAL SITE DETAILS PLOTTED: Tuesday, March 31, 2026 - 4:04pm USER: dayton.obrien

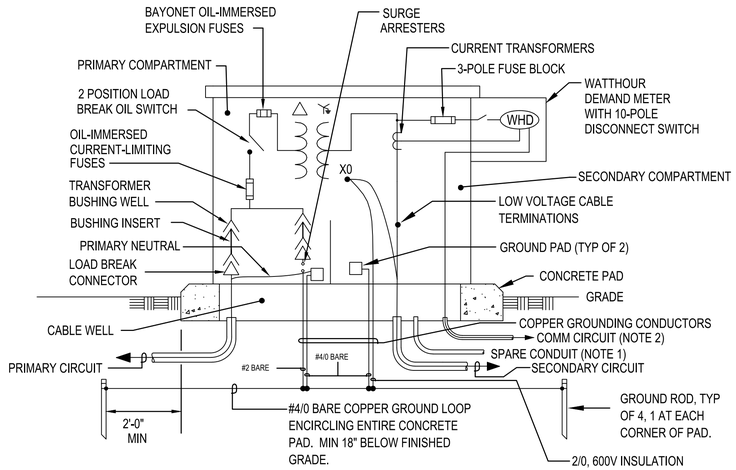


NOTE 1: PROVIDE ONE 1-INCH SPARE CONDUIT STUBBED-OUT FIVE FEET FROM PAD. COORDINATE WITH ACTIVITY FOR ADDITIONAL METERING INPUT (GAS, STEAM OR WATER SYSTEMS).

NOTE 2: PROVIDE THE COMM CIRCUIT TO THE MECHANICAL/ELECTRICAL EQUIPMENT ROOM. COORDINATE WITH ACTIVITY.

## C1 TYPICAL PAD MOUNTED TRANSFORMER DETAIL (SEGREGATION BLDS)

SCALE: NONE

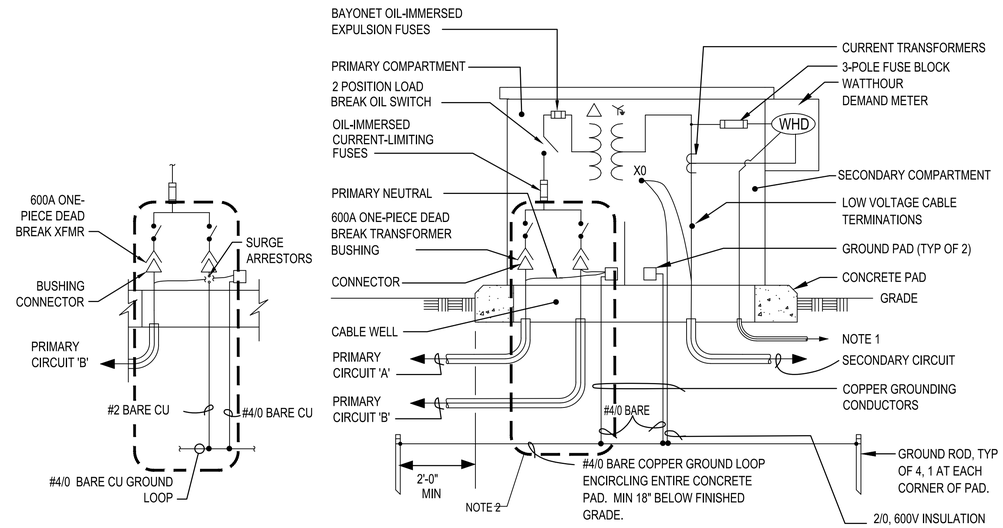


MULTI-GROUNDED PRIMARY SYSTEM. DIAGRAM IS FOR ILLUSTRATIVE PURPOSES ONLY. ACTUAL NUMBER OF SWITCHED WAYS AND USAGE IS A SHOWN ON ONE-LINE DRAWINGS.

NOTE 1 PROVIDE 1" RACEWAY WITH PULL STRING FOR COMM CIRCUIT TO NEAREST COMMUNICATION HAND HOLE.
NOTE 2 SEE DETAIL B4 FOR CONFIGURATION OF LOOD FEED XFMR AT END OF RADIAL FEED.

## C3 LOOP FEED PAD-MOUNTED TRANSFORMER DETAIL (MAGAZINES)

SCALE: NONE

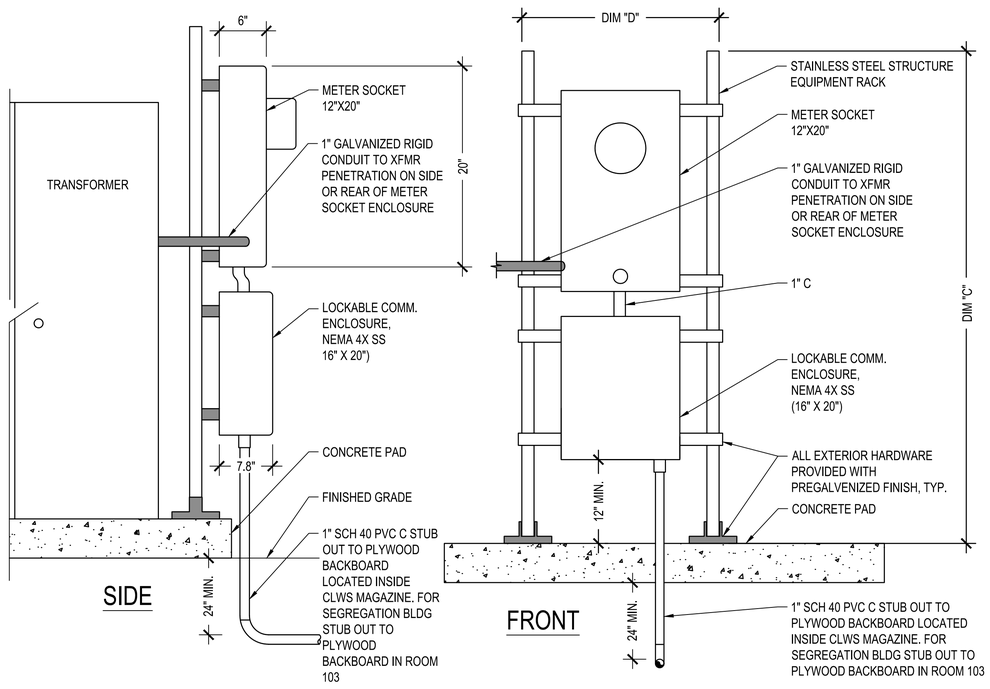


## A1 METER STAND AT TRANSFORMER ELEVATION DETAIL (MAGAZINES)

SCALE: NONE

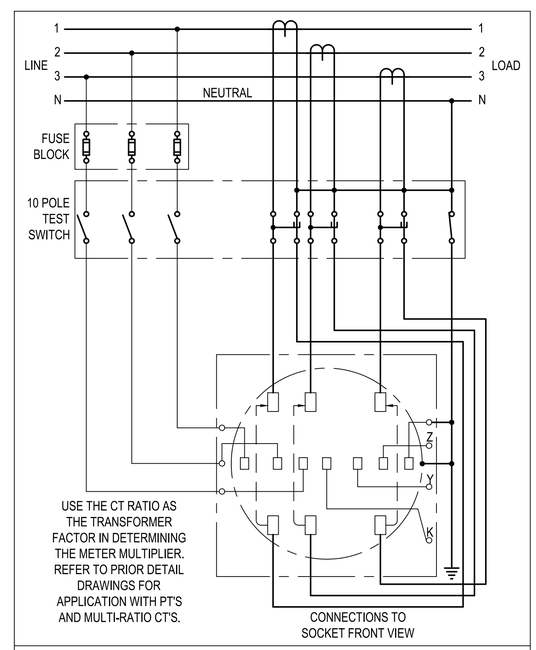


FORM 9S - BASIC WYE CONFIGURATION WITH 10 POLE TEST SWITCH

| REVISED: | 21 AUGUST 2007 | METER PLATE | E-M104 |
|---|---|---|---|

| MARK | DESCRIPTION | DATE |
|---|---|---|

SEAL

A/E INFO

APPROVED
Vincent J. Greco, P.E.
FOR COMMANDER NAVFAC

ACTIVITY
Approved by LCDR VINCE DEL GRECO, ROICC with PWD YORKTOWN, via Email.
SATISFACTORY TO DATE 03/26/2026

| | | | |
|---|---|---|---|
| DES CPO | DRW CPO | CHK JDU | |
| PM/DM | MME/WJW | | |
| BRANCH MANAGER | WRB | | |
| CHIEF ENG/ARCH | JWJ | | |
| FIRE PROTECTION | HPN | | |

DEPARTMENT OF THE NAVY
NAVAL FACILITIES ENGINEERING SYSTEMS COMMAND
MIDLANT PDC CORE

NAVAL FACILITIES ENGINEERING SYSTEMS COMMAND
NAVAL STATION NORFOLK, VIRGINIA

NAVAL WEAPONS STATION
YORKTOWN, VIRGINIA

P-171 WEAPONS MAGAZINES

ELECTRICAL SITE DETAILS

SCALE: NONE
EPROJECT NO.: 1737010
CONSTR. CONTR. NO. ##
NAVFAC DRAWING NO. 12941958
SHEET 302 OF 499

ES504

DRAWFORM REVISION: 14 SEP 2023

FILE NAME: K:\NAVYorktown\MILCON\2024_1737010_P171_Weapons_Magazines\B_Design\DWGS - MAGAZINES\Sheet\13_ELEC\P171-1737010-ES504.dwg LAYOUT NAME: ES504 ELECTRICAL SITE DETAILS PLOTTED: Tuesday, March 31, 2026 - 7:19am USER: dayton.ubrien

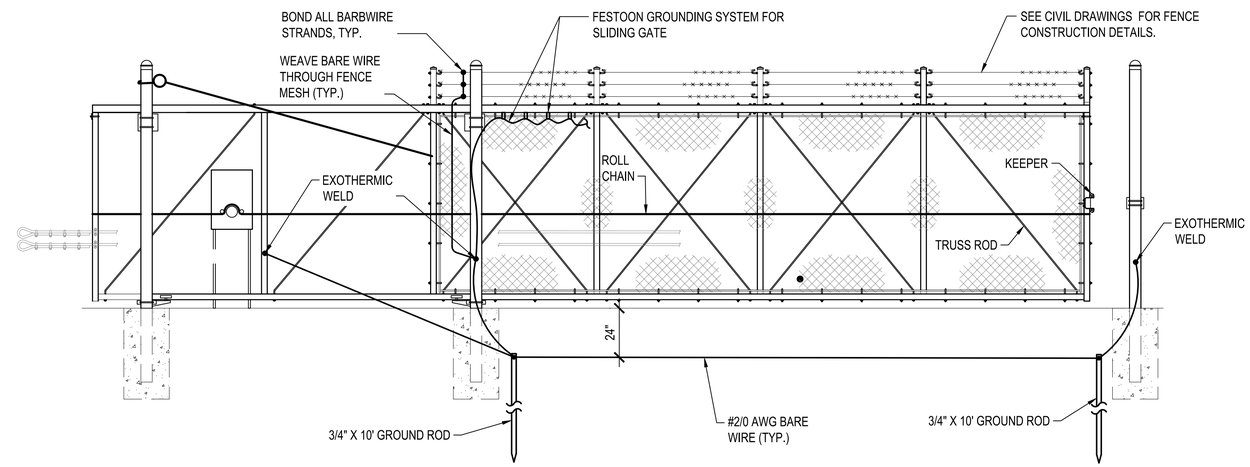


## C3 TYPICAL SINGLE CANTILEVER SLIDING GATE ELEVATION GROUNDING DETAIL

NOT TO SCALE

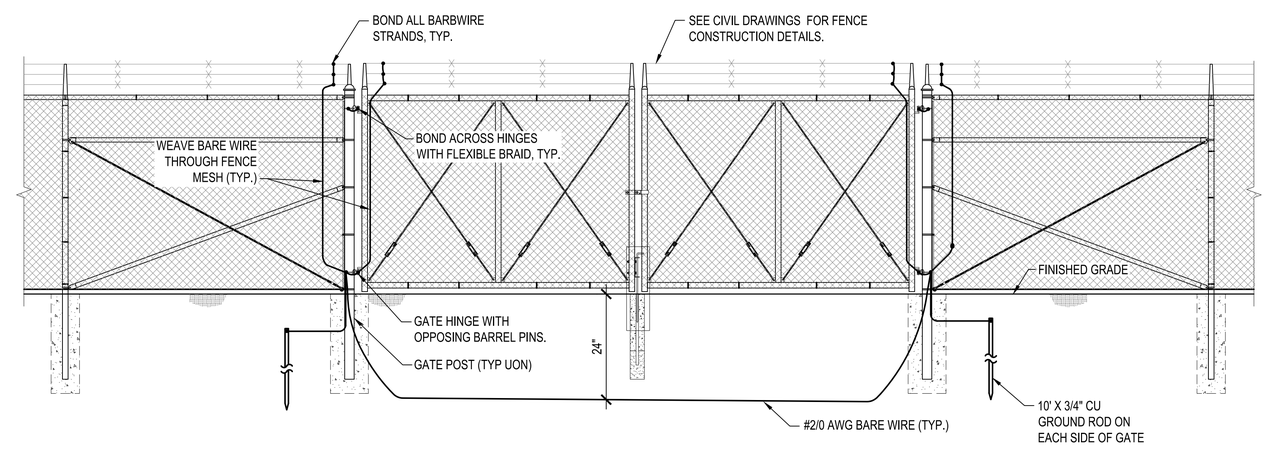


## A3 TYPICAL DOUBLE SWING GATE GROUNDING DETAIL

NOT TO SCALE

| MARK | DESCRIPTION | DATE |
|---|---|---|

SEAL

A/E INFO

APPROVED

FOR COMMANDER NAVFAC

ACTIVITY: Approved by LCDR VINCE DEL GRECO, ROICC with PWD YORKTOWN, via Email.

SATISFACTORY TO DATE 03/26/2026

| DES | CPO | DRW | CPO | CHK | JDU |
|---|---|---|---|---|---|

| | |
|---|---|
| PM/DM | MME/WJW |
| BRANCH MANAGER | WRB |
| CHIEF ENG/ARCH | JWJ |
| FIRE PROTECTION | HPN |

DEPARTMENT OF THE NAVY
NAVAL FACILITIES ENGINEERING SYSTEMS COMMAND
MIDLANT PDC CORE

NAVAL FACILITIES ENGINEERING SYSTEMS COMMAND
NAVAL STATION NORFOLK, VIRGINIA

NAVAL WEAPONS STATION
YORKTOWN, VIRGINIA

P-171 WEAPONS MAGAZINES

ELECTRICAL SITE DETAILS

| | |
|---|---|
| SCALE: | NONE |
| EPROJECT NO.: | 1737010 |
| CONSTR. CONTR. NO. | ## |
| NAVFAC DRAWING NO. | 12941959 |
| SHEET | 303 OF 499 |

ES505

DRAWFORM REVISION: 14 SEP 2023

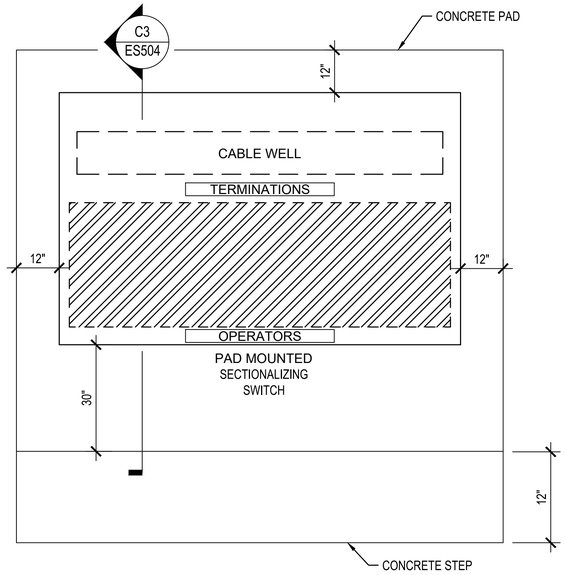


## C1 SECTIONALIZING SWITCH CONCRETE PAD DETAIL (SW-1)

NOT TO SCALE

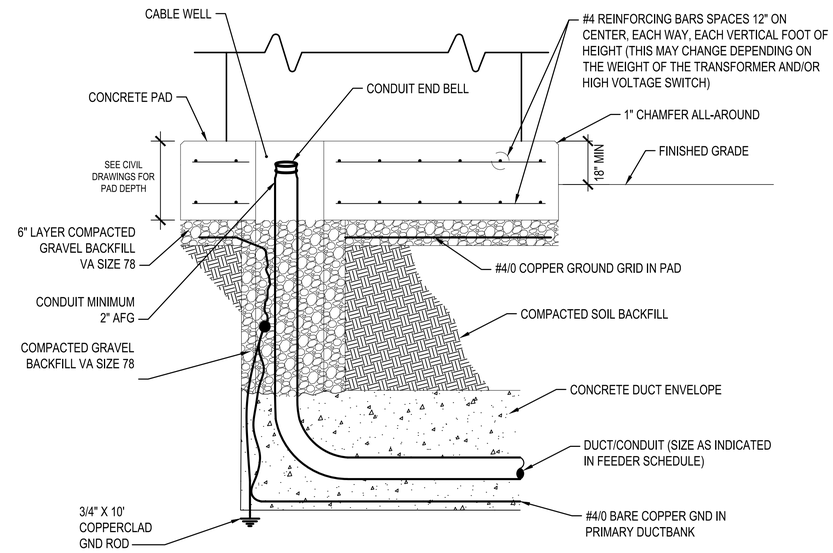


## C3 TYPICAL SECTION THRU CABLE WELL DETAIL

NOT TO SCALE

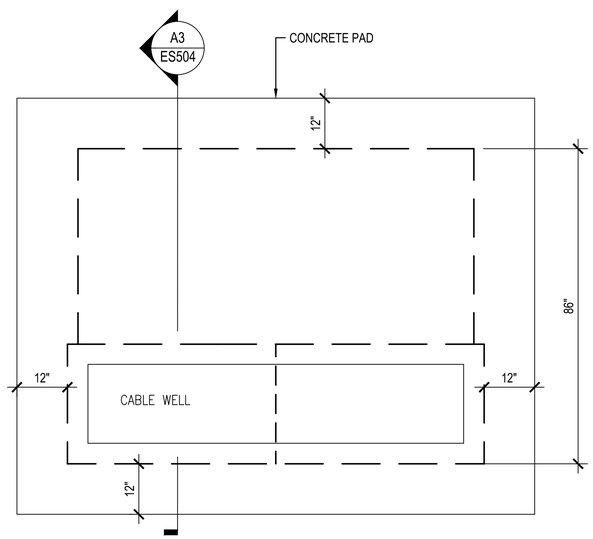


## A1 TYPICAL TRANSFORMER CONCRETE PAD DETAIL

NOT TO SCALE

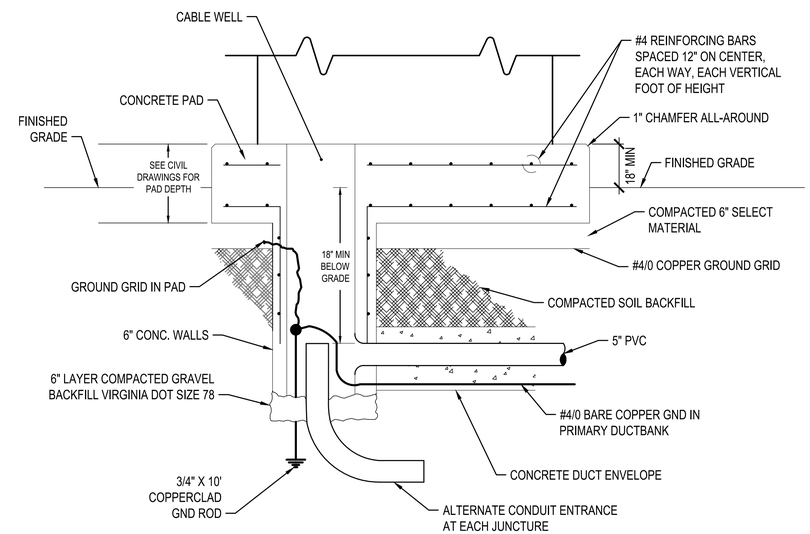


## A3 TYPICAL SECTION THROUGH PRIMARY CABLE WELL DETAIL

NOT TO SCALE

| MARK | DESCRIPTION | DATE |
|---|---|---|

NAVFAC

SEAL

A/E INFO

APPROVED
James F. Grisham, P.E.
FOR COMMANDER NAVFAC

ACTIVITY
Approved by LCDR VINCE DEL GRECO, ROICC with PWD YORKTOWN, via Email.
SATISFACTORY TO DATE 03/26/2026

| | |
|---|---|
| DES CPO | DRW CPO CHK JDJ |
| PM/DM | MME/WJW |
| BRANCH MANAGER | WRB |
| CHIEF ENG/ARCH | JWJ |
| FIRE PROTECTION | HPN |

DEPARTMENT OF THE NAVY
NAVAL FACILITIES ENGINEERING SYSTEMS COMMAND
MIDLANT PDC CORE
NAVAL FACILITIES ENGINEERING SYSTEMS COMMAND
NAVAL STATION NORFOLK, VIRGINIA
NAVAL WEAPONS STATION
YORKTOWN, VIRGINIA
P-171 WEAPONS MAGAZINES
ELECTRICAL SITE DETAILS

| | |
|---|---|
| SCALE: | NONE |
| EPROJECT NO.: | 1737010 |
| CONSTR. CONTR. NO. | ## |
| NAVFAC DRAWING NO. | 12941960 |
| SHEET | 304 OF 499 |

ES506

DRAWFORM REVISION: 14 SEP 2023

FILE NAME: K:\AYorktown\MILCON\2024_1737010_P171_Weapons_Magazines\B_Design\DWGS_MAGAZINE\Sheet\13_ELEC\P171-1737010-ES506.dwg PLOTTED: Tuesday, March 31, 2026 7:19:48 AM USER: dayton.cohen

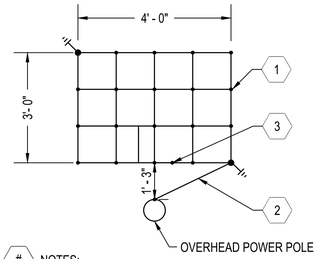


# NOTES:

1. PROVIDE #4/0 BARE COPPER CONDUCTORS AND CREATE GROUNDING MAT CONSISTING OF 1-FOOT X 1-FOOT SQUARE CELLS BURIED AT 18 INCHES BELOW GRADE. GROUNDING MAT CELL WIRING MUST BE ELECTRICALLY INTERCONNECTED BY EXOTHERMIC WELD.
2. TIE POLE GROUND CONDUCTOR TO GROUNDING MAT.
3. SEE GROUNDED METAL PLATE IN CONCRETE PAD DETAIL NOTE 4 ON THIS SHEET.

EQUAL POTENTIAL GROUNDING MAT DETAIL

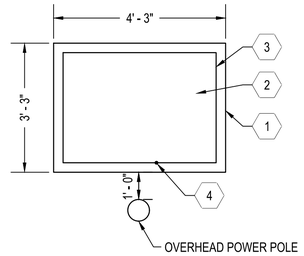


# NOTES:

1. PROVIDE 8 INCHES THICK CONCRETE PAD WITH DIMENSIONS AS SHOWN. INSTALL CONCRETE PAD ABOVE EQUAL POTENTIAL GROUNDING MAT PLACING ON 6 INCH THICK, WELL-COMPACTED GRAVEL BASE SUCH THAT TOP OF CONCRETE PAD IS APPROXIMATELY 4 INCHES ABOVE FINISHED GRADE WITH GRADUAL SLOPE FOR DRAINAGE. PROVIDE EDGES ABOVE GRADE WITH 1/2 INCH CHAMFER. SURROUND CONCRETE PAD ABOVE FINISHED GRADE WITH GRAVEL PREVENTING FALLS.
2. SEE EQUAL POTENTIAL GROUNDING MAT DETAIL ON THIS SHEET.
3. PROVIDE 000 GAUGE (3/8 INCH) GROUNDING STEEL PLATE WITH SAME DIMENSIONS AS EQUAL POTENTIAL GROUNDING MAT. PLACE IN CONCRETE PAD 4 INCHES FROM TOP OF PAD.
4. TIE GROUNDING STEEL PLATE TO GROUNDING MAT WITH #1/0 BARE COPPER CONDUCTOR USING EXOTHERMIC WELDING FOR CONNECTION TO STEEL PLATE AND GROUNDING MAT CONDUCTOR.

GROUNDING METAL PLATE IN CONCRETE PAD DETAIL

## C1 TYPICAL POLE MOUNTED LOAD INTERRUPTER SWITCH HANDLE EQUAL POTENTIAL GROUNDING ZONE DETAIL

NOT TO SCALE

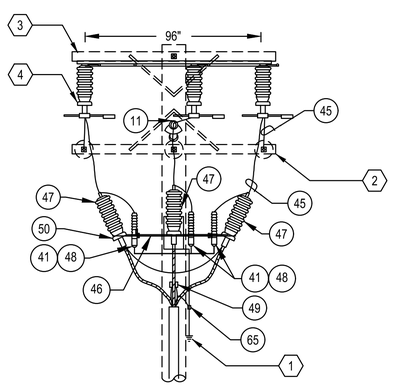


FRONT VIEW

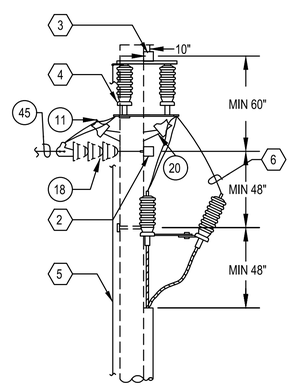


SIDE VIEW

GENERAL NOTE:

1. REFER TO SHEET ES501 FOR POLE LINE MATERIAL LIST.

# NOTES:

1. INTERCONNECT CABLE INSULATED SHIELD DRAIN WIRES AND CONDUIT RISER GROUND TO POLE GROUND.
2. FIBERGLASS DEADEND CROSSARM.
3. FIBERGLASS TANGENT CROSSARM.
4. PROVIDE POLE RISER AND ASYMMETRICAL GROUP-OPERATED LOAD INTERRUPTER SWITCH STRICTLY ACCORDING TO MANUFACTURER'S INSTALLATION DRAWINGS AND INFORMATION.
5. LOCATE OPERATING HANDLE APPROXIMATELY 5 FEET ABOVE GROUND ON FIELD SIDE OF POLE. GROUND BRAID ON OPERATING HANDLE MUST BE SOLIDLY TIED #4/0 COPPER GROUND WIRE.
6. TERMINATE POLE RISER CABLE WITH TWO-HOLES COPPER TERMINAL LUGS AT LOAD SIDE OF GROUP-OPERATED LOAD INTERRUPTER SWITCH AND PROVIDE INSULATED JUMPER FOR SURGE ARRESTERS (MARK 41 ON FRONT VIEW).

## A1 RISER POLE DETAIL (POLE 15X4A)

NOT TO SCALE

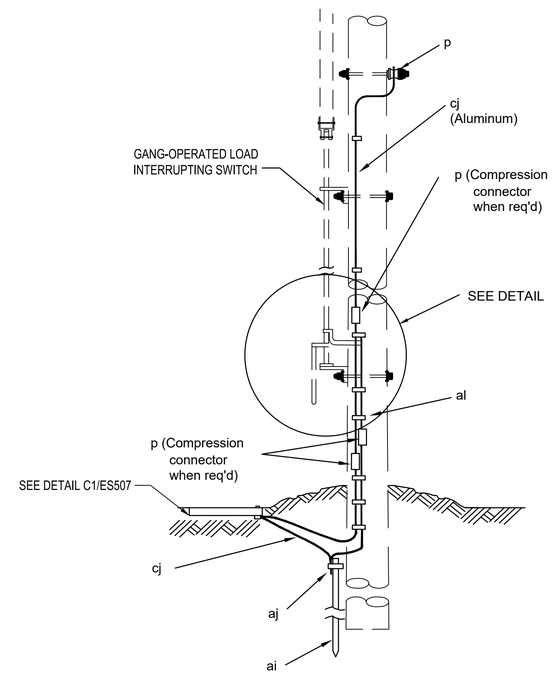


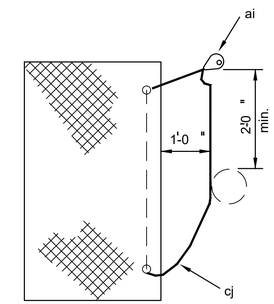


DETAIL OF PLATFORM

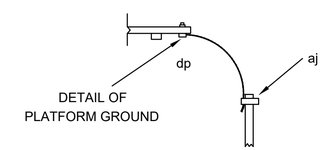


DETAIL OF
PLATFORM GROUND

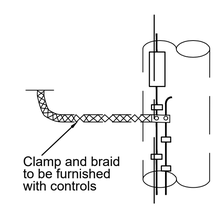


DETAIL

| ITEM | QTY | MATERIAL |
|---|---|---|
| p | | Connector, compression, as req'd |
| ai | 1 | Rod, ground, 5/8 min. dia., (galv.) |
| aj | 1 | Clamp, ground rod, (galvanized steel) |
| al | | Staple, ground wire, (galv.), as req'd |
| cj | | Wire pole ground, as req'd<br>Soft annealed iron, 5/16" with<br>class C galvanizing |
| dp | 2 | Clamp, ground wire, with lock washer |
| | 1 | Platform, grounding plate, galv. iron |

NOTE: WEAR RUBBER GLOVES WHEN OPERATING SWITCH.

## A4 TYPICAL GROUNDING ASSEMBLY - PLATFORM TYPE (FOR SECTIONALIZING AIRBREAK SWITCH)

NOT TO SCALE

| MARK | DESCRIPTION | DATE |
|---|---|---|

SEAL

A/E INFO

APPROVED
James E. Donahue, P.E.
FOR COMMANDER NAVFAC

ACTIVITY: Approved by LCDR VINCE DEL GRECO, ROICC with PWD YORKTOWN, via Email.
SATISFACTORY TO DATE 03/26/2026
DES CPO | DRW CPO | CHK JDU
PM/DM MME/WJW
BRANCH MANAGER WRB
CHIEF ENG/ARCH JWJ
FIRE PROTECTION HPN

DEPARTMENT OF THE NAVY
NAVAL FACILITIES ENGINEERING SYSTEMS COMMAND
MIDLANT PDC CORE
NAVAL FACILITIES ENGINEERING SYSTEMS COMMAND
NAVAL STATION NORFOLK, VIRGINIA
NAVAL WEAPONS STATION
YORKTOWN, VIRGINIA
P-171 WEAPONS MAGAZINES
ELECTRICAL SITE DETAILS

SCALE: AS SHOWN
EPROJECT NO.: 1737010
CONSTR. CONTR. NO. ##
NAVFAC DRAWING NO. 12941961
SHEET 305 OF 499
ES507
DRAWFORM REVISION: 14 SEP 2023

FILE NAME: K:\Work\Yorktown\MILCON\2024_1737010_P171_Weapons_Magazines\B_Design\DWGS - MAGAZINE\Sheet\13_ELECP171-1737010-ES507.dwg PLOTTED: Tuesday, March 31, 2026 7:19:54 AM USER: dayton.obrien

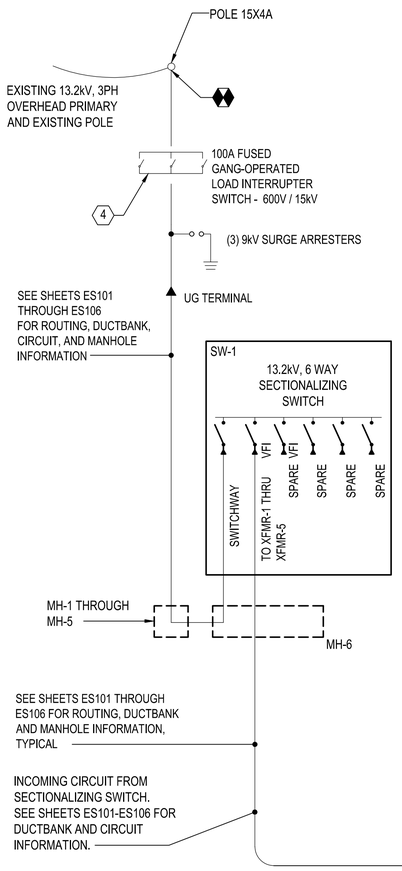


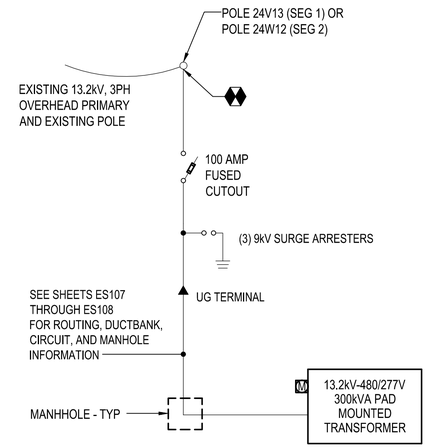


## C3 EXTERIOR ONE-LINE DIAGRAM - SEGREGATION BUILDING - TYPICAL

SCALE: NOT TO SCALE

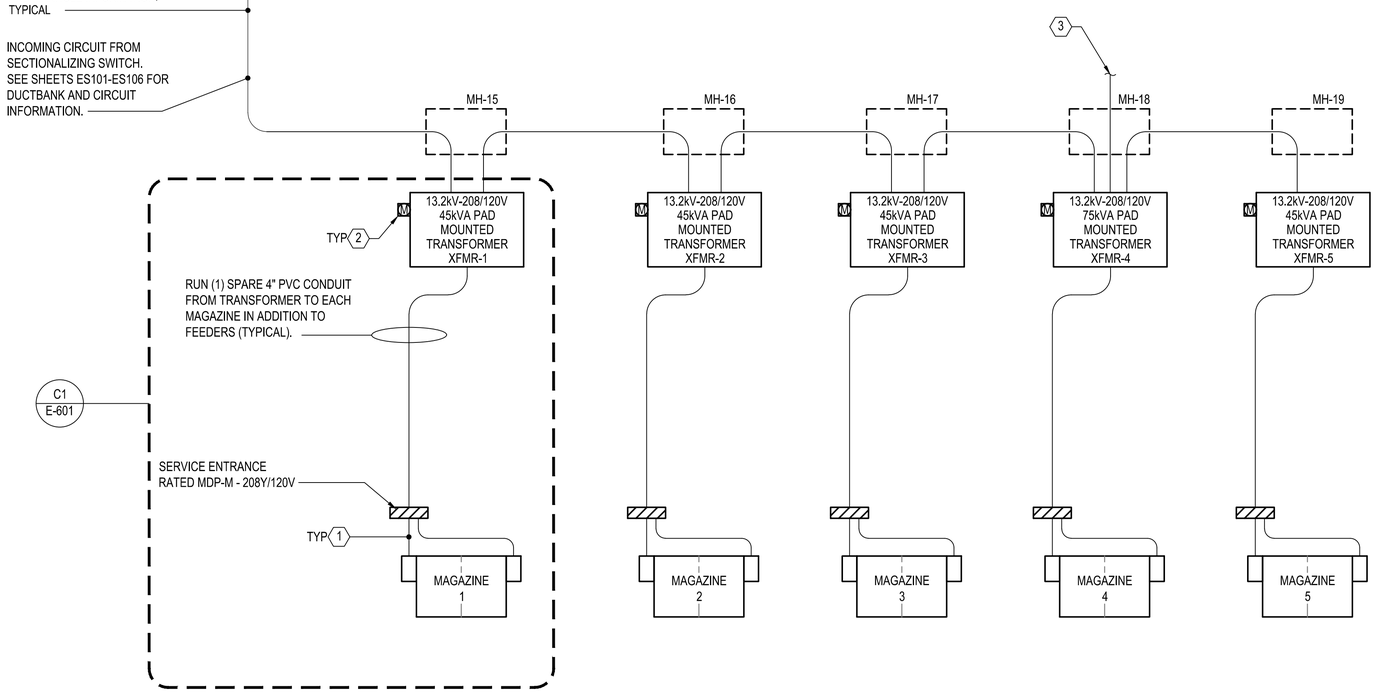


## A1 EXTERIOR ONE-LINE DIAGRAM - MAGAZINE

SCALE: NOT TO SCALE

## DUCTBANK SCHEDULE - POWER

| MARK | PHASE | NEUTRAL | GND | RACEWAY | NOTES |
|---|---|---|---|---|---|
| 1 | 3-1/C #1/0 AWG 15KV EPR 133% | - | 1#1/0 (600V) INSULATED GROUND | 5" SCH 20 PVC | 1, 2, 3, 4 |
| 2 | 3#1/0 | 1#1/0 | #6 | 4" SCH 40 PVC | 1, 2, 4 |
| 3 | 3#600 KCMIL | 1#600 KCMIL | #3 | 4" SCH 40 PVC | 1, 2, 4 |
| 4 | 3#250 KCMIL | 1#250 KCMIL | #2 | 4" SCH 40 PVC | 1, 2, 4 |

DUCTBANK SCHEDULE - POWER NOTES:
1. PROVIDE COPPER CONDUCTORS.
2. PROVIDE CONCRETE ENCASED DUCTBANK.
3. PROVIDE SAME INSULATION AND JACKET MATERIALS AS PHASE CONDUCTORS.
4. SEE CONCRETE ENCASED DUCTBANK DETAILS ON SHEET ES503.

## DUCTBANK SCHEDULE - COMMUNICATIONS

| MARK | DESCRIPTION | RACEWAY | NOTES |
|---|---|---|---|
| A | (1) 1" INNDERDUCT CONTAINING 24 STRAND SM FIBER OPTIC CABLE FOR NMCI NETWORK, 12-STRAND SM FIBER OPTIC CABLE FOR AMI NETWORK. | 4" | 1 |
| B | (1) 1" INNDERDUCT CONTAINING 12 STRAND SM FIBER OPTIC CABLE FOR NMCI NETWORK, 12-STRAND SM FIBER OPTIC CABLE FOR AMI NETWORK. | 4" | 1 |
| | | | |
| | | | |

DUCTBANK SCHEDULE - COMMUNICATIONS NOTES:
1. SEE CONCRETE ENCASED DUCTBANK DETAIL D2/ES503.

## GENERAL SHEET NOTES

## KEYNOTES

1. UNDERGROUND CONDUITS ENTERING/EXITING MAGAZINE MUST BE RGS IN CONCRETE ENCASED DUCTBANK FOR A MINIMUM OF 50' FROM THE PERIMETER OF THE MAGAZINE EXTERIOR WALL(S). SEE GENERAL NOTE 7 ON ES001 FOR ADDITIONAL INFORMATION.
2. AMI METER. SEE DETAIL A1/ES504 FOR ADDITIONAL INFORMATION.
3. TO FORKLIFT CHARGING STATION. SEE SHEET ES106 FOR ADDITIONAL INFORMATION.
4. INSTALL GANG-OPERATOR LOAD INTERRUPTER SWITCH AND OPERATING HANDLE IN ACCORDANCE WITH MANUFACTURER'S INSTALLATION DRAWINGS. SEE SHEET ES507 FOR ADDITIONAL INFORMATION.

| MARK | DESCRIPTION | DATE |
|---|---|---|

SEAL

A/E INFO

APPROVED
James E. Donahue, R.A.
FOR COMMANDER NAVFAC

ACTIVITY
Approved by LCDR VINCE DEL GRECO, ROICC with PWD YORKTOWN, via Email.
SATISFACTORY TO DATE 03/26/2026

DES CPO DRW CPO CHK JDU
PM/DM MME/WJW
BRANCH MANAGER WRB
CHIEF ENG/ARCH JWJ
FIRE PROTECTION HPN

DEPARTMENT OF THE NAVY
NAVAL FACILITIES ENGINEERING SYSTEMS COMMAND
MIDLANT PDC CORE
NAVAL FACILITIES ENGINEERING SYSTEMS COMMAND
NAVAL STATION NORFOLK, VIRGINIA
NAVAL WEAPONS STATION
YORKTOWN, VIRGINIA
P-171 WEAPONS MAGAZINES
EXTERIOR ONE-LINE DIAGRAMS

SCALE: AS SHOWN
EPROJECT NO. 1737010
CONSTR. CONTR. NO. ##
NAVFAC DRAWING NO. 12941962
SHEET 306 OF 499

ES601

DRAWFORM REVISION: 14 SEP 2023

FILE NAME: K:\IAY\Yorktown\MILCON\2024_1737010_P171_Weapons_Magazines\B_Design\DWGS - MAGAZINE\Sheet\13_ELEC\P171-1737010-ES601.dwg LAYOUT NAME: ES601 EXTERIOR ONE-LINE DIAGRAMS PLOTTED: Tuesday, March 31, 2026 - 4:04pm USER: dayton.dohren