BUILDING CODE AND LIFE SAFETY ANALYSIS

APPLICABLE CODES, STANDARD, AND DESIGN CRITERIA

STANDARD	TITLE	REVISION DATE	NOTES
UFC 1-200-01	GENERAL BUILDING REQUIREMENTS	01 OCTOBER 2020	--
UFC 3-600-01*	FIRE PROTECTION ENGINEERING FOR FACILITIES	05 JUNE 2021	--
IBC	INTERNATIONAL BUILDING CODE	2018	APPLICABLE CHAPTERS PER UFC 1-200-01; MEANS OF EGRESS SHALL BE BASED UPON THE LIFE SAFETY CODE
NFPA 101	LIFE SAFETY CODE (LSC)	2018	--

* UFC 3-600-01 GENERALLY REQUIRES CONSTRUCTION ISSUES TO COMPLY WITH IBC CRITERIA AND LIFE SAFETY/EGRESS ISSUES TO MEET THE REQUIREMENTS OF LSC. CONFLICTS BETWEEN THE IBC AND LSC RELATED TO FIRE RESISTANCE ARE REQUIRED TO COMPLY WITH LSC CRITERIA AND APPLICABLE PROVISIONS OF THE UFC CODE (UFC 3-600-01 § 2-1.1).

BUILDING DESCRIPTION

TYPE OF CONSTRUCTION	IIB - NONCOMBUSTIBLE UNPROTECTED
NUMBER OF STORIES	1
BUILDING HEIGHT	15'-0"

ALLOWABLE AREA FOR NEW CONSTRUCTION (TYPE IIB)

NUMBER OF STORIES	OCCUPANCY AND USE	(A) BLDG AREA PER STORY (ACTUAL)	(B) TABLE 506.2 AREA (PER STORY)	(C) AREA FOR FRONTAGE INCREASE (100% OPEN)	(E) ALLOWABLE AREA
1	U	825	8,500	6375	14,875 (PER STORY)
TOTAL	--	825	--	--	14,875

ALLOWABLE HEIGHT (TYPE VB)

	ALLOWABLE (TABLE 504.3)	ACTUAL
BUILDING HEIGHT	55'-0"	15'-0"
NUMBER OF STORIES	2	1

FIRE RESISTANCE RATING REQUIREMENTS FOR EXTERIOR WALLS OF TYPE IIB BUILDING BASED ON FIRE SEPARTION DISTANCE (IBC TABLE 602)

FIRE SEPARATION DISTANCE TO LOT LINE	USE GROUP U
FSD < 5 FT	1 HR
5FT ≥ FSD < 10FT	1 HR
FSD ≥ 10FT	0 HR

TYPE VB FIRE RESISTANCE RATINGS (IN HOURS) OF STRUCTURAL ELEMENTS

BUILDING ELEMENT	HOURLY RATING		NOTES
	REQ'D TYPE VB	PROVIDED	
STRUCTURAL FRAME, INCLUDING COLUMNS, GIRDERS, TRUSSES	0	0	--
BEARING WALLS	0	0	--
EXTERIOR	0	0	*NOT LESS THAN THE FIRE RESISTANCE RATING BASED ON THE FIRE SEPARATION DISTANCE FROM BUILDING 235 (SEE IBC TABLE 602)
INTERIOR	0	NA	--
NONBEARING WALLS AND PARTITIONS EXTERIOR WALLS	0	0	*NOT LESS THAN THE FIRE RESISTANCE RATING BASED ON THE FIRE SEPARATION DISTANCE FROM BUILDING 235 (SEE IBC TABLE 602)
FLOOR CONST. INCLUDING SUPPORTING BEAMS AND JOISTS	0	0	--
ROOF CONSTRUCTION INCLUDING SUPPORTING BEAMS AND JOISTS	0	0	--
EXIT ENCLOSURES	1	NA	
SHAFT ENCLOSURES	1	NA	

USE AND OCCUPANCY CLASSIFICATIONS

DESCRIPTION OF USE	OCCUPANCY CLASSIFICATIONS	
	IBC	LSC
FORK LIFT CHARGING	UTILITY USE GROUP U	LOW HAZARD STORAGE (CHAPTER 42)

APPLICABLE OCCUPANT LOAD FACTORS

USE	OCCUPANT LOAD FACTOR (FT2/PER PERSON)
STORAGE USE (IN OTHER OCCUPANCY)	500

COMMON PATH, DEAD END, & TOTAL TRAVEL DISTANCE FOR STORAGE USE

TRAVEL DISTANCE REQUIREMENT	REQUIRED	ACTUAL
COMMON PATH OF TRAVEL • NONSPRINKLERED STORAGE OCCUPANCIES (LSC TABLE 42.2.5)	NOT LIMITED	NONE
DEAD END PATH OF TRAVEL • NONSPRINKLERED STORAGE OCCUPANCIES (LSC TABLE 42.2.5)	NOT LIMITED	NONE
TOTAL TRAVEL DISTANCE • NONSPRINKLERED STORAGE OCCUPANCIES (LSC TABLE 42.2.6)	NOT LIMITED	34'

NUMBER OF EXITS AND CAPACITY

FLOOR LEVEL	REQUIRED EXIT CAPACITY	AVAILABLE EXIT CAPACITY	NUMBER OF EXITS REQUIRED	NUMBER OF EXITS PROVIDED
FIRST FLOOR	2	2 - 36" WIDE DOORS 32" NET AVAIL EACH	1	2

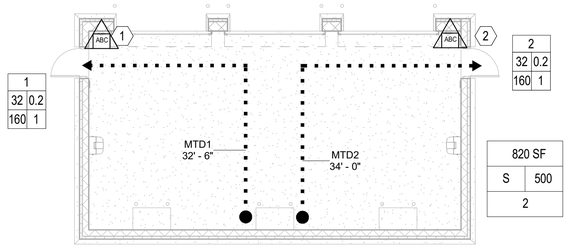

B3 LIFE SAFETY FLOOR PLAN - FORKLIFT CHARGING
1/8" = 1'-0"

PLAN NORTH

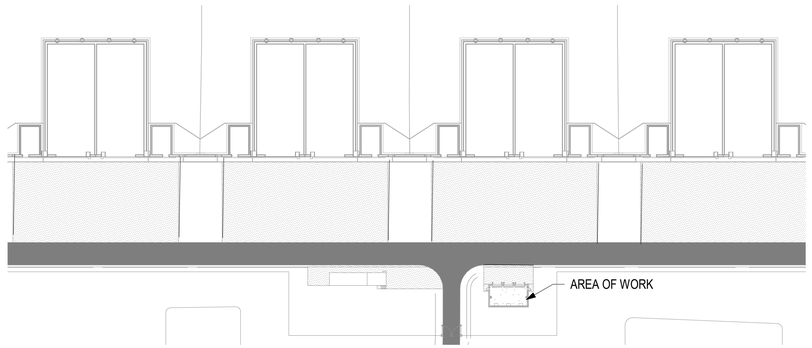

A3 CODE COMPLIANCE PLAN - FORKLIFT CHARGING
1" = 80'-0"

SITE PLAN NOTES:
1. PER UFC 3-600-01 4-33.2.3 SPRINKLER AND HYDRANT PROTECTION ARE NOT REQUIRED FOR MUNITIONS STORAGE AREAS.
2. FORK LIFT STORAGE BLDG HAS BEEN PROVIDED WITH MANUAL EXTINGUISHERS AT EACH EXIT DOORWAY.
3. FORKLIFT CHARGING STATION IS MINIMUM 50 FT DIRECT LINE OF SIGHT FROM CLOSEST MUNITION STORAGE AREA.

PLAN NORTH

GENERAL NOTES

A. REFER TO DISCIPLINE SHEETS FOR EQUIPMENT LOCATIONS AND CONSTRUCTION DETAILS.

LIFE SAFETY LEGEND

SYMBOL	DESCRIPTION
CPT = X'-XX"	COMMON PATH OF TRAVEL
DE = X'-XX"	DEAD -END CORRIDOR
MTD = X'-XX"	MAXIMUM TRAVEL DISTANCE
ABC	FIRE EXTINGUISHER - ABC TYPE
#	EXIT LABEL
# / W P / C A	# : EXIT NUMBER W: NET EXIT WIDTH (INCHES) C: CAPACITY (PEOPLE) P: EXIT WIDTH PER PERSON A: ACTUAL EGRESS (PEOPLE)

OCCUPANCY, TYPE
S - STORAGE

1500 SF — ROOM / ZONE AREA
S 500 — OCCUPANCY, ALLOWABLE AREA PER OCCUPANT
3 — OCCUPANCY LOAD (PEOPLE)

OCCUPANCY TABLE SUMMARY

USE	OCCUPIED AREA	OCCUPANT LOAD FACTOR (SF PER OCCUPANT)	OCCUPANT LOAD
S	820	500	2

EXIT CAPACITY SCHEDULE#

EXIT NUMBER	NET CLEAR EXIT WIDTH (INCHES)	EXIT WIDTH PER PERSON (EGRESS FACTOR)	EXIT CAPACITY (PEOPLE)	ACTUAL PERSONS USING EXIT
1	32	0.2	160	1
2	32	0.2	160	1
TOTAL			320	2

TRAVEL DISTANCE SUMMARY

ID	ACTUAL	MAXIMUM
MTD1	32' - 6"	NA
MTD2	34' - 0"	NA

GRAPHIC SCALE(S)

1/8" = 1' - 0" 0 5' 10' 15' 30'

SYM	DESCRIPTION	DATE	APPR
A	NEW DRAWING - ADD CHARGING STA.	06/24/2022	DWN

NAVFAC

SEAL

A/E INFO

APPROVED
FOR COMMANDER NAVFAC
ACTIVITY
Approved by LCDR VINCE DEL GRECO, RO/CO with PWD YORKTOWN, via Email.
SATISFACTORY TO DATE 03/26/2026
DES KEK | DRW DMH | CHK SSR
PM/DM MMP/SLC
BRANCH MANAGER CGM
CHIEF ENG/ARCH JWJ
FIRE PROTECTION HPN

DEPARTMENT OF THE NAVY
NAVAL FACILITIES ENGINEERING SYSTEMS COMMAND
MIDLANT DC CORE
NAVAL FACILITIES ENGINEERING SYSTEMS COMMAND - MID-ATLANTIC
NAVAL STATION - NORFOLK, VA
NAVAL WEAPONS STATION YORKTOWN, VIRGINIA
P171 WEAPON MAGAZINES
FORKLIFT CHARGING STATION
FORKLIFT CHARGING LIFE SAFETY-CODE-SITE PLAN

SCALE: AS NOTED
EPROJECT NO.: 1737010
CONSTR. CONTR. NO.
NAVFAC DRAWING NO. 12942149
SHEET 467 OF 499
GI101B
DRAWFORM REVISION: 25 AUGUST 2020

3/30/2026 10:17:24 AM GI101B
C:\Users\david.haddock\Documents\P169-1588748-F-R21_david.haddock.rvt

GENERAL NOTES

1. UFC 1-200-01 (01 SEPTEMBER 2022), DOD BUILDING CODE, IS THE FOUNDATIONAL DOCUMENT FOR THE DESIGN OF THE STRUCTURAL SYSTEM FOR THIS PROJECT. BELOW ARE CORE UFC, CONSENSUS BUILDING CODES AND STANDARDS USED FOR THE DESIGN OF THE STRUCTURAL SYSTEM:

   CORE UNIFIED FACILITIES CRITERIA:

   UFC 3-301-01 (1 OCTOBER 2019 CHANGE 1, 4 FEBRUARY 2022): STRUCTURAL ENGINEERING

   UFC 3-320-06A (1 MARCH 2005): CONCRETE FLOOR SLABS ON GRADE SUBJECTED TO HEAVY LOADS

   CONSENSUS BUILDING CODES AND STANDARDS:

   GENERAL:

   IBC 2021: INTERNATIONAL BUILDING CODE

   ASCE 7-16, WITH SUPPLEMENT 1: AMERICAN SOCIETY OF CIVIL ENGINEERS, MINIMUM DESIGN LOADS FOR BUILDINGS AND OTHER STRUCTURES

   CONCRETE:

   ACI 318-19: AMERICAN CONCRETE INSTITUTE, BUILDING CODE REQUIREMENTS FOR STRUCTURAL CONCRETE

   MASONRY
   TMS 402-2022: BUILDING CODE FOR MASONRY STRUCTURES
   TMS 602-2022: SPECIFICATION FOR MASONRY STRUCTURES

   METALS:

   ANSI/AISC 360-22: AMERICAN INSTITUTE OF STEEL CONSTRUCTION, SPECIFICATION FOR STRUCTURAL STEEL BUILDINGS

   AWS D1.1-2015: AMERICAN WELDING SOCIETY, STRUCTURAL WELDING CODE – STEEL

2. THIS PROJECT IS SUBJECT TO IBC 2021 SPECIAL INSPECTION REQUIREMENTS AS MODIFIED BY UFC 3-301-01. THE STATEMENT AND SCHEDULE OF SPECIAL INSPECTIONS, INCLUDED WITH THE PROJECT SPECIFICATIONS, DEFINE THE SCOPE OF SPECIAL INSPECTIONS.
3. THIS PROJECT IS NOT SUBJECT TO IBC 2021 STRUCTURAL OBSERVATION REQUIREMENTS.
4. THE STRUCTURES ASSOCIATED WITH THIS PROJECT DO NOT MEET THE OCCUPANCY LEVELS OF INHABITED BUILDINGS. THEREFORE, THE STRUCTURES ARE EXEMPT FROM UFC 4-010-01 ANTITERRORISM PROVISIONS.
5. COORDINATE STRUCTURAL WORK WITH WORK SHOWN ON OTHER DRAWINGS.
6. CONTRACT DOCUMENTS REPRESENT THE FINISHED STRUCTURE. PROVIDE MEANS AND METHODS OF CONSTRUCTION INCLUDING, BUT NOT LIMITED TO, SHORING AND TEMPORARY BRACING TO MAINTAIN THE STRUCTURE IN A SAFE AND STABLE CONDITION AT ALL TIMES. THE CONTRACTOR IS SOLELY RESPONSIBLE TO DETERMINE ERECTION PROCEDURES AND SEQUENCE OF CONSTRUCTION. UNDERTAKE NECESSARY MEASURES TO ENSURE SAFETY OF PERSONS AND STRUCTURES AT THE SITE AND ADJACENT TO THE SITE. VISITS TO THE SITE BY THE CONTRACTING OFFICER OR CONTRACTING OFFICER'S REPRESENTATIVE DO NOT RELIEVE THE CONTRACTOR OF SUCH RESPONSIBILITY.
7. IF CERTAIN FEATURES ARE NOT FULLY SHOWN OR CALLED FOR ON THE CONTRACT DRAWINGS OR SPECIFICATIONS, THEIR CONSTRUCTION MUST BE OF THE SAME CHARACTER AS FOR SIMILAR CONDITIONS THAT ARE SHOWN OR CALLED FOR SUBJECT TO THE APPROVAL OF THE CONTRACTING OFFICER. WHERE SECTIONS VARY, PROVIDE FOR SMOOTH TRANSITIONS BETWEEN THEM, UNLESS NOTED OTHERWISE.
8. REPORT DIMENSIONAL DISCREPANCIES BETWEEN DRAWINGS TO THE CONTRACTING OFFICER PRIOR TO BEGINNING WORK IN AFFECTED AREAS.
9. CONSTRUCTION MEANS, METHODS, TECHNIQUES, SEQUENCES AND SUPERVISION OF THE WORK ARE THE SOLE RESPONSIBILITY OF THE CONTRACTOR.
10. DETAILS TITLED OR NOTED AS TYPICAL OR STANDARD APPLY NOT ONLY WHERE SPECIFICALLY INDICATED OR REFERENCED BUT ALSO IN OTHER CASES WHERE THE NATURE OF THE CONSTRUCTION REQUIRES THEIR USE. DETERMINE APPLICABILITY OF TYPICAL AND STANDARD DETAILS FROM DESCRIPTIVE TITLES OR FROM THE SIMILARITY OF A CONSTRUCTION CONDITION WITH ANOTHER CONDITION WHERE THE DETAIL IS SPECIFICALLY INDICATED OR REFERENCED.

DESIGN LOADS & CRITERIA

1. RISK CATEGORY: II PER UFC 3-301-01 TABLE 2-2.
2. LIVE LOADS PER UFC 3-301-01 TABLE G-1
3. GROUND FLOOR SLAB:
   A. GARAGE STORAGE UNIFORM LOAD: 100 PSF
   B. UNLOADED FORKLIFT WHEEL LOAD (BASED ON DREXEL MODEL SL120 SWINGMAST): 16,710 POUNDS (1/2 AXLE LOAD)
4. ROOFS: 20 PSF UNIFORM LOAD
5. UNIFORM AND CONCENTRATED LIVE LOADS HAVE NOT BEEN APPLIED CONCURRENTLY. WHERE BOTH UNIFORM AND CONCENTRATED LOADS ARE INDICATED, THE SUPPORTING STRUCTURE HAS BEEN DESIGNED FOR THE LOAD THAT PRODUCES THE GREATER LOAD EFFECTS.
6. ROOF SNOW LOAD DATA
   A. GROUND SNOW LOAD: P_g = 15 PSF
   B. FLAT-ROOF SNOW LOAD: P_f = 12 PSF
   C. SNOW EXPOSURE FACTOR: C_e = 1.0 FOR PARTIALLY EXPOSED AT TERRAIN CATEGORY B
   D. SNOW LOAD IMPORTANCE FACTOR: I_S = 1.00
   E. THERMAL FACTOR: C_t = 1.0
7. WIND DESIGN DATA
   A. BASIC DESIGN WIND SPEED: 115 MPH
   B. ALLOWABLE STRESS DESIGN WIND SPEED: 89 MPH
   C. WIND EXPOSURE CATEGORY: C
   D. INTERNAL PRESSURE COEFFICIENT: +/- 0.55
   E. ENCLOSURE CLASSIFICATION: PARTIALLY ENCLOSED
   F. TOPOGRAPHIC FACTOR: 1.0
   G. REFER TO COMPONENTS AND CLADDING PRESSURE NOTES ON S-002B FOR BASIC DESIGN WIND PRESSURES APPLIED TO EXTERIOR COMPONENT AND CLADDING MATERIALS NOT SPECIFICALLY DESIGNED BY THE REGISTERED DESIGN PROFESSIONAL RESPONSIBLE FOR THE DESIGN OF THE STRUCTURE.
8. EARTHQUAKE DESIGN DATA (PER THE GEOTECHNICAL REPORT)
   A. SEISMIC IMPORTANCE FACTOR: I_E = 1.00
   B. MAPPED SPECTRAL RESPONSE ACCELERATION PARAMETERS:

      S_S = 0.109g, S_1 = 0.0425g

   C. SITE CLASS: D
   D. SHORT-PERIOD SITE COEFFICIENT: F_a = 1.6
   E. LONG-PERIOD SITE COEFFICIENT: F_v = 2.4
   F. DESIGN SPECTRAL RESPONSE ACCELERATION PARAMETERS:

      S_{DS} = 0.116g, S_{D1} = 0.068g

   G. SEISMIC DESIGN CATEGORY: A
   H. BASIC SEISMIC FORCE-RESISTING SYSTEM: BEARING WALL SYSTEM WITH ORDINARY REINFORCED MASONRY SHEAR WALLS
   I. DESIGN BASE SHEAR: XXXX KIPS
   J. SEISMIC RESPONSE COEFFICIENT: C_s = 0.057
   K. RESPONSE MODIFICATION COEFFICIENT: R = 2
   L. ANALYSIS PROCEDURE USED: EQUIVALENT LATERAL FORCE ANALYSIS
   M. THE ASCE 7-16 SEISMIC DESIGN REQUIREMENTS FOR BUILDINGS DO NOT APPLY TO THIS BUILDING SINCE IT HAS BEEN ASSIGNED TO SEISMIC DESIGN CATEGORY A.
9. ROOF RAIN LOAD DATA

   RAIN INTENSITY: i = 3.5 INCH/HOUR FOR 60-MINUTE DURATION / 100-YEAR RETURN PERIOD STORM

10. NOTIONAL LOADS FOR GENERAL STRUCTURAL INTEGRITY:

    LOAD PATH CONNECTIONS: 5% OF THE CONNECTED PORTION'S WEIGHT

    LATERAL FORCES: DESIGN LATERAL FORCE APPLIED AT A STORY EQUAL TO 1% OF THE PORTION OF THE TOTAL DEAD LOAD OF THE STRUCTURE LOCATED OR ASSIGNED TO A LEVEL.

    CONNECTION TO SUPPORTS: 5% OF THE UNFACTORED DEAD LOAD PLUS LIVE LOAD REACTION IMPOSED BY THE SUPPORTED MEMBER ON THE SUPPORTING MEMBER.

    ANCHORAGE OF STRUCTURAL WALLS: STRENGTH LEVEL HORIZONTAL FORCE PERPENDICULAR TO THE PLANE OF THE WALL EQUAL TO 20% OF THE WEIGHT OF THE WALL TRIBUTARY TO THE CONNECTION, BUT NOT LESS THAN 5 PSF.

SERVICEABILITY LIMITS

1. SHALLOW FOUNDATION SETTLEMENT LIMIT: NOT TO EXCEED AN ANGULAR DISTORTION OF 1/500 DIFFERENTIAL OR 1-INCH TOTAL.
2. CONCRETE ROOF FRAMING DEFLECTION LIMIT:
   A. L/180 FOR IMMEDIATE DEFLECTION DUE TO LIVE LOAD.
3. BUILDING LATERAL DRIFT: H/480 BASED ON AN ALLOWABLE STRESS DESIGN WIND SPEED WITH A 10 YEAR MEAN RECURRENCE INTERVAL (0.42 TIMES THE BASIC COMPONENT AND CLADDING LOADS):
4. WIND INDUCED DEFLECTION LIMITS FOR FRAMING SUPPORTING EXTERIOR WALL FINISHES BASED ON AN ALLOWABLE STRESS DESIGN WIND SPEED WITH A 10 YEAR MEAN RECURRENCE INTERVAL (0.42 TIMES THE BASIC COMPONENT AND CLADDING LOADS):
   A. L/240 FOR INSULATED METAL PANEL
   B. L/600 DEFLECTION LIMIT FOR MASONRY VENEER SKIRT DOES NOT CONTROL

GEOTECHNICAL INFORMATION

1. THE INFORMATION PROVIDED IN THE REPORT TITLED 'FINAL GEOTECHNICAL REPORT MILCON PROJECT P-171 WON 1737010 WEAPONS MAGAZINES, PHASE 3 YORKTOWN NAVAL WEAPONS STATION, YORKTOWN, VA', PREPARED BY NAVFAC MIDLANT, AND DATED SEPTEMBER 18, 2023 HAS BEEN USED FOR THE DESIGN OF THE FOUNDATIONS.
2. SITE PREPARATION
   A. EXCAVATE, FILL, AND BACKFILL IN ACCORDANCE WITH THE CONTRACT DRAWINGS AND SPECIFICATIONS.
   B. DO NOT INSTALL FOUNDATION WORK UNTIL IT HAS BEEN COORDINATED WITH ADJACENT UNDERGROUND UTILITIES. SLEEVE OR LOWER FOOTINGS WHERE REQUIRED. INSTALL UTILITIES PERPENDICULAR TO WALL FOOTINGS.
   C. DO NOT PLACE BACKFILL IN AN UNBALANCED MANNER AGAINST FOUNDATION WALLS UNLESS WALLS ARE SECURELY BRACED AGAINST OVERTURNING, EITHER BY TEMPORARY CONSTRUCTION BRACING OR BY PERMANENT CONSTRUCTION.
   D. PROVIDE A 6 INCH LAYER OF VDOT NO. 57 STONE BELOW THE FOOTINGS.
3. SOIL AND SITE CHARACTERISTICS
   A. MODULUS OF SUBGRADE REACTION: 100 PCI FOR GROUND LEVEL SLAB UPON FIRM NATURAL SOIL OR WELL-COMPACTED STRUCTURAL FILL MATERIAL
4. SHALLOW FOUNDATIONS
   A. NET ALLOWABLE SOIL BEARING PRESSURE: 1,500 PSF
   B. FACTOR OF SAFETY: 2.0 FOR SLIDING AND OVERTURNING STABILITY
   C. PRIOR TO PLACING FOUNDATION CONCRETE AND REINFORCEMENT, ALLOW SPECIAL INSPECTOR/GEOTECHNICAL ENGINEER TO INSPECT FOUNDATION EXCAVATIONS TO EXPLORE THE EXTENT OF ANY POSSIBLE LOOSE, SOFT, EXPANSIVE, OR OTHERWISE GEOTECHNICALLY UNSUITABLE SUBGRADE CONDITIONS AND TO VERIFY THE DESIGN BEARING PRESSURE. GEOTECHNICAL ENGINEER WILL PROVIDE DIRECTION TO CORRECT UNSUITABLE SUBGRADE SUBJECT TO REVIEW AND APPROVAL BY THE CONTRACTING OFFICER.
   D. FROST PENETRATION DEPTH IS 9 INCHES BELOW FINISH SITE GRADES. SUBJECT TO REVIEW AND APPROVAL OF THE CONTRACTING OFFICER, LOWER FOOTINGS BASED ON ACTUAL SITE CONDITIONS TO MAINTAIN BOTTOM OF EXTERIOR FOUNDATIONS A MINIMUM OF 9 INCHES BELOW FINAL SITE GRADES.

CAST-IN-PLACE CONCRETE

1. CONCRETE: NORMAL WEIGHT WITH A 4000 PSI MINIMUM 28-DAY COMPRESSIVE STRENGTH.
2. FORMWORK:
   A. COORDINATE CONCRETE WORK WITH THE PLACEMENT OF PIPING, INSERTS, FLOOR DRAINS, CHAMFER STRIPS, REGLETS AND OTHER EMBEDDED ITEMS.
   B. ACCURATELY PLACE, SUPPORT AND SECURE EMBEDDED ITEM SUCH AS ANCHOR RODS AND WELD PLATES BEFORE PLACING CONCRETE TO PREVENT DISPLACEMENT OF EMBEDDED ITEM BEYOND PERMITTED TOLERANCES.
   C. SLEEVE PIPING OR UTILITIES PASSING THROUGH CONCRETE TO MAINTAIN 1" CLEAR ALL AROUND, UNLESS NOTED OTHERWISE. REFER TO OTHER DISCIPLINE DRAWINGS FOR SLEEVE DETAILS. PROVIDE MEASURES TO ENSURE THAT SLEEVES REMAIN FREE OF DEBRIS AND WATER DURING CONSTRUCTION.
   D. PROVIDE 3/4" CHAMFER STRIPS ON EDGES OF EXPOSED CONCRETE, UNLESS NOTED OTHERWISE.
   E. WITH THE EXPLICIT PRIOR APPROVAL IN WRITING OF THE CONTRACTING OFFICER, FOOTINGS FOR SHALLOW FOUNDATIONS MAY BE EARTH-FORMED USING UNDISTURBED NATIVE SOIL. PROVIDE A MINIMUM EXCAVATION WIDTH 4" GREATER THAN INDICATED.

CAST-IN-PLACE CONCRETE CONTINUED

3. REINFORCING STEEL:
   A. BARS: ASTM A615 GRADE 60. SHOP FABRICATE BENT BARS AND BARS WITH HOOKS.
   B. WELDED WIRE REINFORCEMENT: ASTM A1064, SHEET TYPE. DO NOT USE ROLL TYPE.
   C. DETAIL AND PLACE REINFORCEMENT IN ACCORDANCE WITH THE AMERICAN CONCRETE INSTITUTE ACI SP-66, ACI 301 AND ACI 318, AND THE CONCRETE REINFORCING STEEL INSTITUTE CRSI MANUAL OF STANDARD PRACTICE.
   D. UNLESS NOTED OTHERWISE, USE THE FOLLOWING MINIMUM CONCRETE CLEAR COVER OVER REINFORCEMENT:
      a. CONCRETE CAST AGAINST EARTH OR EXPOSED TO EARTH OR WEATHER: 3"
      b. ELEVATED SLABS: 1"
   E. UNLESS NOTED OTHERWISE, USE A 44 BAR DIAMETER EMBEDMENT AND LAP SPLICE LENGTH.
   F. MINIMUM STANDARD HOOK EMBEDMENT LENGTHS: 16 BAR DIAMETERS
   G. HOOK EMBEDMENT IS THE MINIMUM STRAIGHT LINE DISTANCE FROM THE CRITICAL SECTION OF THE BAR TO THE FARTHEST EDGE OF THE HOOK.
4. JOINTS:
   A. LOCATE CONSTRUCTION, CONTRACTION, ISOLATION, EXPANSION, AND OTHER JOINTS AS INDICATED OR SPECIFIED, OR OTHERWISE APPROVED BY THE CONTRACTING OFFICER.
   B. CLEAN SURFACES OF HORIZONTAL AND VERTICAL CONSTRUCTION JOINTS TO REMOVE LAITANCE AND EXPOSE CLEAN COARSE AGGREGATE SOLIDLY EMBEDDED IN MORTAR MIX. THOROUGHLY CLEAN AND WET SURFACE OF CONSTRUCTION JOINTS JUST PRIOR TO DEPOSITING CONCRETE.

UNIT MASONRY

1. MASONRY DESIGN FOR STRENGTH CONFORMS TO THE STRENGTH DESIGN METHODOLOGY.
2. USE MASONRY ASSEMBLIES WITH THE FOLLOWING PROPERTIES:
   A. UNITS: ASTM C90, MINIMUM NET AREA COMPRESSIVE STRENGTH = 1900 PSI
   B. MINIMUM DESIGN MASONRY ASSEMBLAGE STRENGTH, f'_m = 1900 PSI
   C. WEIGHT CLASSIFICATION: NORMAL WEIGHT
   D. MORTAR: ASTM C270, TYPE M OR S
3. AGGREGATE FOR MORTAR: ASTM C144. AGGREGATE FAILING TO COMPLY WITH THE ASTM C144 GRADATION REQUIREMENTS MAY BE USED PROVIDED THE MORTAR CAN BE PREPARED TO COMPLY WITH THE ASTM C270 PROPERTY SPECIFICATION REQUIREMENTS FOR LABORATORY PREPARED MORTAR.
4. REINFORCING STEEL:
   A. BARS: ASTM A615 GRADE 60. SHOP FABRICATE BENT BARS AND BARS WITH HOOKS.
   B. MINIMUM CLEAR DISTANCE TO ANY FACE OF MASONRY UNIT OR FORMED SURFACE: 1/2"
   C. LAP CONTINUOUS HORIZONTAL AND VERTICAL REINFORCING 60 BAR DIAMETERS.
   D. PROVIDE REINFORCING STEEL DOWELS WITH STANDARD 90 DEGREE HOOKS OF THE SAME SIZE AND SPACING AS VERTICAL REINFORCING FROM THE SUPPORTING STRUCTURE.
   E. USE STANDARD LADDER TYPE HORIZONTAL JOINT REINFORCING AT EVERY OTHER COURSE (16 INCHES ON CENTER MAXIMUM SPACING). BEGIN AT TOP OF FIRST BLOCK COURSE. IN ADDITION, PROVIDE HORIZONTAL JOINT REINFORCING IN TWO JOINTS IMMEDIATELY ABOVE AND BELOW OPENINGS. EXTEND JOINT REINFORCING 2 FEET MINIMUM BEYOND THE OPENING JAMB ON EACH SIDE OF THE OPENING.
5. GROUT:
   A. PROPERTIES: COARSE GROUT PER ASTM C476, MINIMUM COMPRESSIVE STRENGTH = 2000 PSI, SLUMP = 8" TO 11"
   B. FULLY GROUT CELLS BELOW GRADE, CELLS THAT CONTAIN REINFORCING STEEL AND CELLS THAT CONTAIN PLATES, BOLTS OR OTHER EMBEDDED ITEMS.
   C. PROVIDE MASONRY UNITS WITH MINIMUM SPACE IN CELLS TO RECEIVE GROUT OF 3"x 3" AND ALIGN THESE CELLS TO PROVIDE UNOBSTRUCTED OPENINGS.

POST INSTALLED ANCHORS

1. ALL ADHESIVE ANCHOR INSTALLATIONS WILL COMPLY WITH MANUFACTURER'S WRITTEN INSTRUCTIONS AND SPECIFICATIONS, INCLUDING ICC-ES REPORTS.

   THE FOLLOWING INSTRUCTIONS ARE MINIMUM REQUIREMENTS AND DO NOT SUPERSEDE ANY INSTRUCTIONS OR REQUIREMENTS FROM THE CONTRACTOR'S SELECTED MANUFACTURER. CONTRACTOR TO SUBMIT SELECTED ANCHOR PRODUCT FOR REVIEW AND APPROVAL.

2. DUST WILL BE BLOWN FROM THE HOLE WITH COMPRESSED AIR TO ENSURE PROPER ANCHOR SEATING DEPTH AND TO PROVIDE A CLEAN BONDING SURFACE. ADDITIONALLY, THE HOLE WILL BE BRUSHED WITH A NYLON BRUSH THEN BLOWN AGAIN WITH COMPRESSED AIR.
3. ADHESIVE WILL ONLY BE APPLIED TO DRY SURFACES.
4. BASE MATERIAL TEMPERATURE MUST BE IN ACCORDANCE WITH MANUFACTURER INSTRUCTIONS AT TIME OF INSTALLATION.
5. WHEN INSTALLING EPOXY ANCHORS INTO MASONRY, ANCHORS WILL BE INSTALLED IN SOLID GROUTED CELLS ONLY. CONTRACTOR TO AVOID DAMAGING REINFORCING DURING INSTALLATION.
6. CHEMICAL ANCHOR SYSTEMS:
   a. CONCRETE: USE ONLY ADHESIVE ANCHOR SYSTEMS THAT HAVE BEEN ISSUED AN ICC-ES REPORT IN ACCORDANCE WITH PROVISIONS OF ICC-ES AC308. ANCHOR SYSTEM SHOULD BE APPROVED FOR USE IN CRACKED CONCRETE AND SEISMIC DESIGN CATEGORIES A-F PER SECTION 2.0 OF THE ICC-ES EVALUATION SERVICES REPORT. ANCHOR SYSTEM WILL BE INSTALL PER REQUIREMENTS OF THE ICC-ES EVALUATION SERVICES REPORT FOR SPECIFIC ANCHOR, AND AS REQUIRED BY THE MANUFACTURER.
   b. GROUT-FILLED MASONRY UNITS: USE ONLY ADHESIVE ANCHOR SYSTEMS THAT HAVE BEEN ISSUED AN ICC-ES REPORT IN ACCORDANCE WITH PROVISIONS OF ICC-ES AC58. ANCHOR SYSTEMS WILL BE INSTALLED PER REQUIREMENTS OF ICC-ES EVALUATION SERVICES REPORT FOR THE SPECIFIC ANCHOR, AND AS REQUIRED BY THE MANUFACTURER.
7. REMOVE GREASE, OIL, RUST, AND ANY OTHER LAITANCE FROM RODS AND DOWELS PRIOR TO INSTALLATION.

LEGEND

Symbol	Meaning	Symbol	Meaning
XY	NEW WORK KEY NOTE X = N FOR FOUNDATION NOTE X = R FOR ROOF FRAMING NOTE Y = NOTE NUMBER	TOF	TOP OF FOOTING
			SLAB STEP / CHANGE IN ELEVATION
-X"	TOP OF SLAB ELEVATION FROM REFERENCE ELEVATION 0'-0"		SLAB-ON-GRADE DOWELED JOINT
WF-X	WALL FOOTING MARK		STEPPED FOOTING
WX	WALL MARK		CONCRETE MASONRY UNIT WALL
X	WALL GRID MARK		CAST-IN-PLACE CONCRETE

SYM | DESCRIPTION | DATE | APPR

NAVFAC

SEAL

A/E INFO

APPROVED
James E. Donahue, R.A.
FOR COMMANDER NAVFAC 4/22/2026

ACTIVITY
Approved by LCDR VINCE DEL GRECO, ROICC with PWD YORKTOWN, via Email.
SATISFACTORY TO DATE 03/26/2026

DES DOB | DRW MTW | CHK CWJ
PM/DM MMP/SLC
BRANCH MANAGER NEK
CHIEF ENG/ARCH JWJ
FIRE PROTECTION HPN

DEPARTMENT OF THE NAVY
NAVAL FACILITIES ENGINEERING SYSTEMS COMMAND
NAVAL FACILITIES ENGINEERING SYSTEMS COMMAND - MID-ATLANTIC
MIDLANT DC CORE
NAVAL STATION - NORFOLK, VA
NAVAL WEAPONS STATION YORKTOWN, VIRGINIA
P171 WEAPON MAGAZINES
FORKLIFT CHARGING STATION
STRUCTURAL NOTES AND LEGEND

SCALE: AS NOTED
EPROJECT NO.: 1737010
CONSTR. CONTR. NO. ##
NAVFAC DRAWING NO. 12942152
SHEET 468 OF 499

S-001B

DRAWFORM REVISION: 25 AUGUST 2020

3/31/2026 2:00:22 PM S-001B
C:\Users\miguel.walker\Documents\P171-1737010-S-R21-FORKLIFT_miguel.walker.rvt

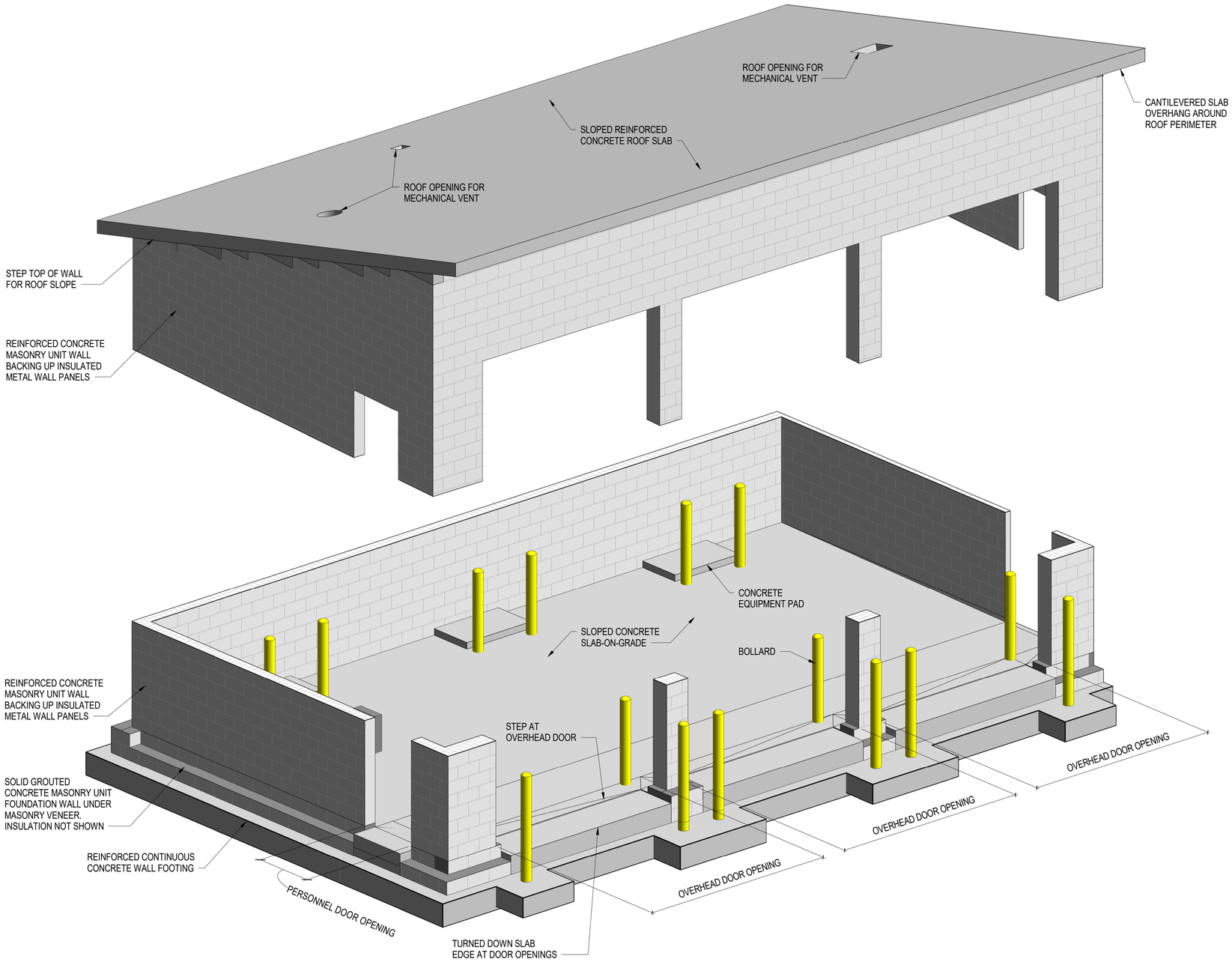

A1 **3D REPRESENTATION**

NOT TO SCALE

3D REPRESENTATION GENERAL NOTES

A. REFER TO S-001B FOR GENERAL NOTES AND LEGEND.

B. THE 3D REPRESENTATION IS FOR GENERAL INFORMATION ONLY AND DOES NOT REPRESENT A COMPLETE AND DETAILED REPRESENTATION OF THE STRUCTURE. REFER TO FOUNDATION AND FRAMING PLANS, ENLARGED SECTIONS AND DETAILS AND MISCELLANEOUS DETAILS FOR MORE DETAILED INFORMATION NOT SHOWN IN THE 3D REPRESENTATION.

C. ARCHITECTURAL AND OTHER NON-STRUCTURAL ELEMENTS ARE NOT SHOWN IN THE 3D REPRESENTATION.

COMPONENTS AND CLADDING PRESSURES

1. USE WIND PRESSURES BELOW FOR THE DESIGN OF COMPONENTS AND CLADDING ELEMENTS OR RETAIN A PROFESSIONAL ENGINEER TO DETERMINE WIND PRESSURES FOR SPECIFIC EFFECTIVE WIND AREAS.
2. REFER TO DESIGN LOADS AND CRITERIA NOTES ON S-001 FOR WIND LOAD DESIGN CRITERIA.
3. WIND PRESSURES ARE STRENGTH LEVEL VALUES BASED ON THE BASIC DESIGN WIND SPEED (WIND LOAD FACTOR = 1.0). MULTIPLY PRESSURES BY 0.6 WHEN USING ALLOWABLE STRESS DESIGN METHODOLOGY.
4. PRESSURE ARE GROSS VALUES, DO NOT INCLUDE DEAD LOADS AND ARE TABULATED IN POUNDS PER SQUARE FOOT (PSF).
5. FOR ROOFS AND WALLS, PLUS AND MINUS SIGNS SIGNIFY PRESSURES ACTING TOWARD AND AWAY FROM THE SURFACES, RESPECTIVELY.
6. DESIGN COMPONENTS AND CLADDING FOR THE MAXIMUM POSITIVE AND NEGATIVE WIND PRESSURES.
7. FOR COMPONENTS AND CLADDING NOT AFFECTED BY INTERNAL PRESSURE SUCH AS METAL WALL PANELS ATTACHED TO THE EXTERIOR SURFACES OF CONCRETE WALLS, DEDUCT 5 PSF INTERNAL PRESSURE FROM THE ABSOLUTE PRESSURE VALUES TABULATED BELOW EXCEPT DO NOT REDUCE BELOW 16 PSF.
8. LINEAR INTERPOLATION IS PERMITTED FOR INTERMEDIATE EFFECTIVE WIND AREAS.
9. BUILDING ZONES ARE DEFINED IN ASCE 7-16 FIGURES 30.3-1 FOR WALLS, 30.3-5B FOR ROOFS.
10. FOR DESIGN OF DEFLECTION-CONTROLLED COMPONENTS AND CLADDING, MULTIPLY DESIGN WIND PRESSURES BY 0.42 TO CONVERT LOADING TO ALLOWABLE STRESS DESIGN VALUES FOR A 10-YEAR MEAN RETURN INTERVAL.

DESIGN WIND PRESSURES FOR ROOF COMPONENTS (PSF)								
ROOF ZONE	COMPONENT TRIBUTARY AREA (SQFT)							
	10		50		200		500	
1	+20	-38	+18	-35	+17	-34	+17	-34
2	+20	-44	+18	-38	+17	-36	+17	-36
3	+20	-71	+18	-58	+17	-52	+17	-52

DESIGN WIND PRESSURES FOR WALL COMPONENTS (PSF)								
WALL ZONE	COMPONENT TRIBUTARY AREA (SQFT)							
	10		100		200		500	
4	+32	-34	+28	-30	+27	-29	+26	-28
5	+32	-40	+28	-33	+27	-31	+26	-26

FORKLIFT AXLE LOADS AND GEOMETRY

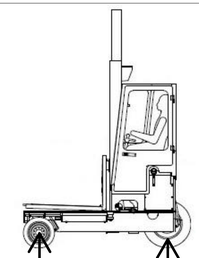

DRIVE AXLE
UNLOADED = 4,800 LBS
LOADED = 14,210 LBS

89"
WHEEL BASE

STEER WHEEL
UNLOADED = 12,460 LBS
LOADED = 15,050 LBS

NOTES:
1. LOADS BASED ON COMBILIFT FORKLIFT MODEL C12000ET
2. RATED CAPACITY = 12,000 LBS
3. OVERALL WIDTH (WIDE TREAD) = 90.4"
4. FRONT WHEEL LOAD = 1/2 AXLE LOAD

SYM	DESCRIPTION	DATE	APPR

NAVFAC

SEAL

A/E INFO

APPROVED
Digitally signed by R.J.
FOR COMMANDER NAVFAC
ACTIVITY
Approved by LCDR VINCE DEL GRECO, ROICC with PWD YORKTOWN, via Email.
SATISFACTORY TO DATE 03/26/2026

DES	DOB	DRW	MTW	CHK	CWJ
PM/DM	MMP/SLC				
BRANCH MANAGER	NEK				
CHIEF ENG/ARCH	JWJ				
FIRE PROTECTION	HPN				

DEPARTMENT OF THE NAVY
NAVAL FACILITIES ENGINEERING SYSTEMS COMMAND
MIDLANT DOC CORE

NAVAL FACILITIES ENGINEERING SYSTEMS COMMAND - MID-ATLANTIC
NAVAL STATION - NORFOLK, VA

NAVAL WEAPONS STATION YORKTOWN, VIRGINIA
P171 WEAPON MAGAZINES
FORKLIFT CHARGING STATION

3D REPRESENTATION

SCALE: AS NOTED
EPROJECT NO.: 1737010
CONSTR. CONTR. NO. ##
NAVFAC DRAWING NO. 12942153
SHEET 469 OF 499

S-002B

DRAWFORM REVISION: 25 AUGUST 2020

3/31/2026 2:00:28 PM S-002B
C:\Users\miguel.walker\Documents\P171-1737010-S-R21-FORKLIFT_miguel.walker.rvt

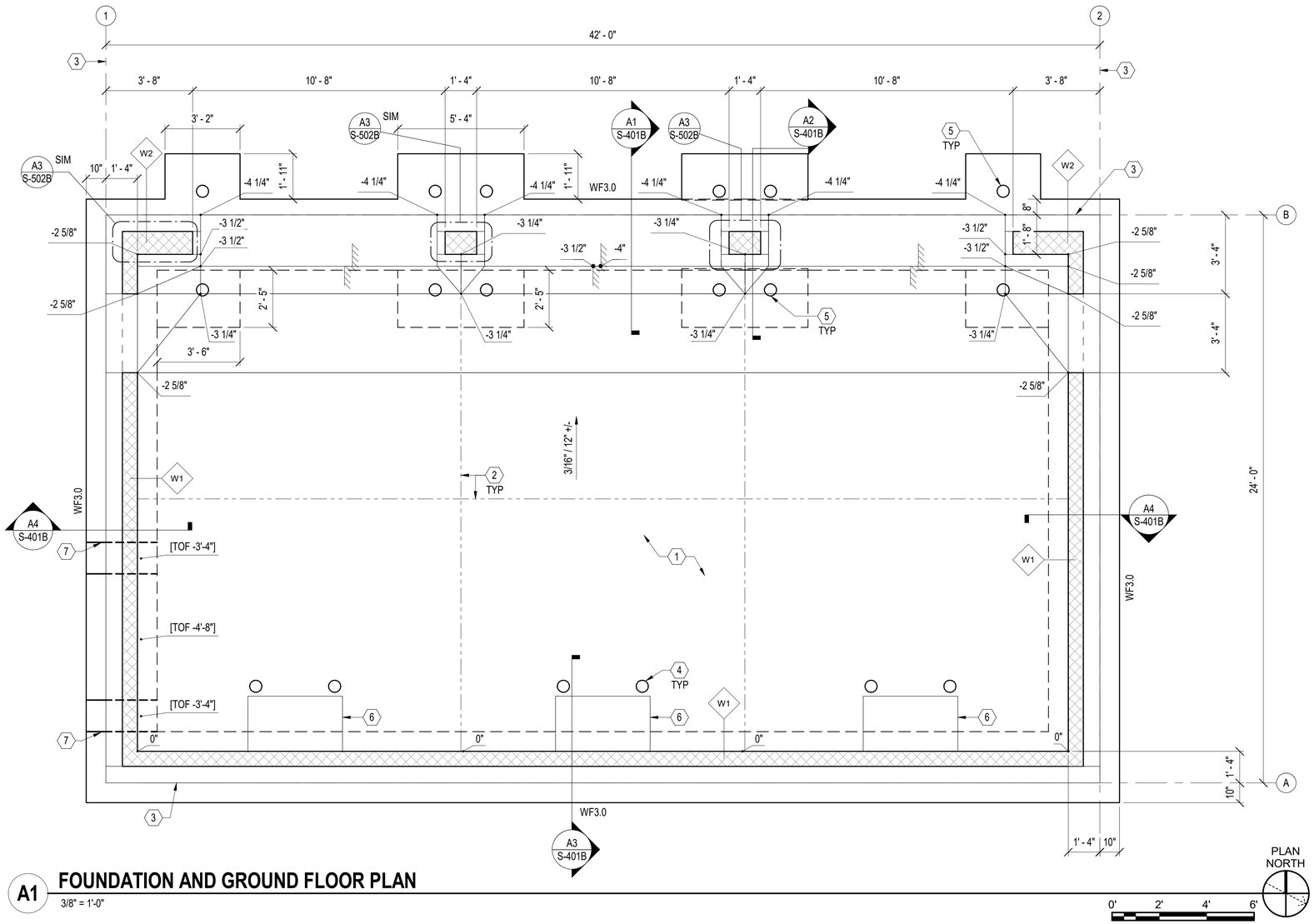

A1 FOUNDATION AND GROUND FLOOR PLAN

3/8" = 1'-0"

PLAN NORTH

0' 2' 4' 6'

WALL FOOTING SCHEDULE

MARK	DIMENSIONS		REINFORCING
	WIDTH	DEPTH	
WF3.0	3' - 0"	1' - 2"	(5)-#5 CONTINUOUS TOP AND BOTTOM WITH #4 TIES AT 1'-6" ON CENTER

MASONRY WALL SCHEDULE

MARK	CMU WIDTH	REINFORCING		NOTES
		VERTICAL	HORIZONTAL	
W1	8"	#5 AT 4'-0" OC	(2)-#5 CONTINUOUS AT LOCATIONS INDICATED.	1
W2	12"	#5 AT 1'-4" OC	(2)-#5 CONTINUOUS AT LOCATIONS INDICATED.	1, 2 AND 3

NOTES:

1. AT SIDE AND REAR WALLS, PLACE TOP OF CONTINUOUS BOND BEAMS AT ELEVATIONS 2'-0", 6'-0", AND 10'-0". AT SIDE WALLS, PLACE STEPPED BOND BEAM AT TOP OF STEPPED WALL. REFER TO SECTION FOR DETAILS.
2. PLACE TOP OF CONTINUOUS BOND BEAMS AT ELEVATIONS 2'-0" AND 15'-4" AND PLACE 24" DEEP CONTINUOUS BOND BEAM LINTEL AT HEAD OF OVERHEAD DOOR OPENINGS. REFER TO SECTIONS FOR DETAILS.
3. AT 1'-4" LONG SECTIONS OF WALLS, AT EACH SIDE OF OVERHEAD DOOR OPENINGS, PLACE (2) #5 BAR VERTICAL REINFORCING BARS IN EACH CELL. REFER TO DETAIL 4 ON S-502B.

GENERAL SHEET NOTES

A. REFER TO S-001B FOR GENERAL NOTES AND PLAN LEGEND AND S-501B FOR TYPICAL SLAB-ON-GRADE AND FOUNDATION DETAILS.

B. ELEVATIONS SHOWN ON THE STRUCTURAL DRAWINGS ARE RELATIVE TO A REFERENCE ELEVATION OF 0'-0" REFER TO CIVIL DRAWINGS FOR CORRESPONDING ELEVATION.

C. TOP OF FOOTING ELEVATIONS ARE 1'-4" BELOW REFERENCE ELEVATION 0'-0" UNLESS NOTED OTHERWISE.

D. PROVIDE TERMITE TREATMENT DIRECTLY ON THE EXPOSED COMPACTED BUILDING PAD SUBGRADE SOIL.

KEYNOTES

1 8-INCH CONCRETE SLAB-ON-GRADE REINFORCED WITH #5 BARS 16 OC SPACING EACH WAY ON VAPOR RETARDER AND 12-INCH DEEP POROUS FILL.
SLAB SLOPE VALUES ARE NOMINAL. ACTUAL SLOPE VALUES ARE VALUES RESULTING FROM THE ACTUAL TOP OF SLAB ELEVATIONS INDICATED.

2 SLAB-ON-GRADE DOWELED JOINT. REFER TO DETAILS ON S-501B.

3 GRID LINE AND FACE OF MASONRY VENEER.

4 FREE STANDING INTERIOR CONCRETE EMBEDDED BOLLARD - REFER TO TYPICAL BOLLARD DETAIL ON S-502B. REFER TO ARCHITECTURAL DRAWINGS FOR BOLLARD LOCATION WITHIN BUILDING LIMITS. COORDINATE BOLLARD PLACEMENT WITH BUILDINGS FOUNDATIONS AND PAVEMENT.

5 BOLLARD AT OVERHEAD DOORS - REFER TO TYPICAL BOLLARD DETAIL ON S-502B. REFER TO ARCHITECTURAL DRAWINGS FOR LOCATIONS WITHIN BUILDING LIMITS. COORDINATE BOLLARD PLACEMENT WITH BUILDINGS FOUNDATIONS.

6 CONCRETE EQUIPMENT PAD. REFER TO S-501B FOR DETAIL.

7 STEP WALL FOOTING TO AN ELEVATION LOWER THAN ELECTRICAL DUCT BANK. REFER TO B1/S-501B, TYPICAL FOOTING DETAILS AND C3/S-502B, TYPICAL CONCRETE MASONRY BOND BEAM LINTEL DETAIL. REFER TO ELECTRICAL SITEWORK DRAWINGS FOR DUCT BANK LOCATION.

SYM	DESCRIPTION	DATE	APPR

NAVFAC

SEAL

A/E INFO

APPROVED
Steven E. Greene, P.E.
FOR COMMANDER NAVFAC

ACTIVITY
Approved by LCDR VINCE DEL GRECO, ROICC with PWD YORKTOWN, via Email.

SATISFACTORY TO DATE 03/26/2026

DES	DOB	DRW	MTW	CHK	CWJ

PM/DM	MMP/SLC
BRANCH MANAGER	NEK
CHIEF ENG/ARCH	JWJ
FIRE PROTECTION	HPN

DEPARTMENT OF THE NAVY
NAVAL FACILITIES ENGINEERING SYSTEMS COMMAND
MIDLANT DC CORE
NAVAL FACILITIES ENGINEERING SYSTEMS COMMAND - MID-ATLANTIC
NAVAL STATION - NORFOLK, VA
NAVAL WEAPONS STATION YORKTOWN, VIRGINIA
P171 WEAPON MAGAZINES
FORKLIFT CHARGING STATION
FOUNDATION AND GROUND FLOOR PLAN

SCALE: AS NOTED
EPROJECT NO.: 1737010
CONSTR. CONTR. NO. ##
NAVFAC DRAWING NO. 12942154
SHEET 470 OF 499

S-101B

DRAWFORM REVISION: 25 AUGUST 2020

3/31/2026 2:00:29 PM S-101B
C:\Users\miguel.walker\Documents\P171-1737010-S-R21-FORKLIFT_miguel.walker.rvt

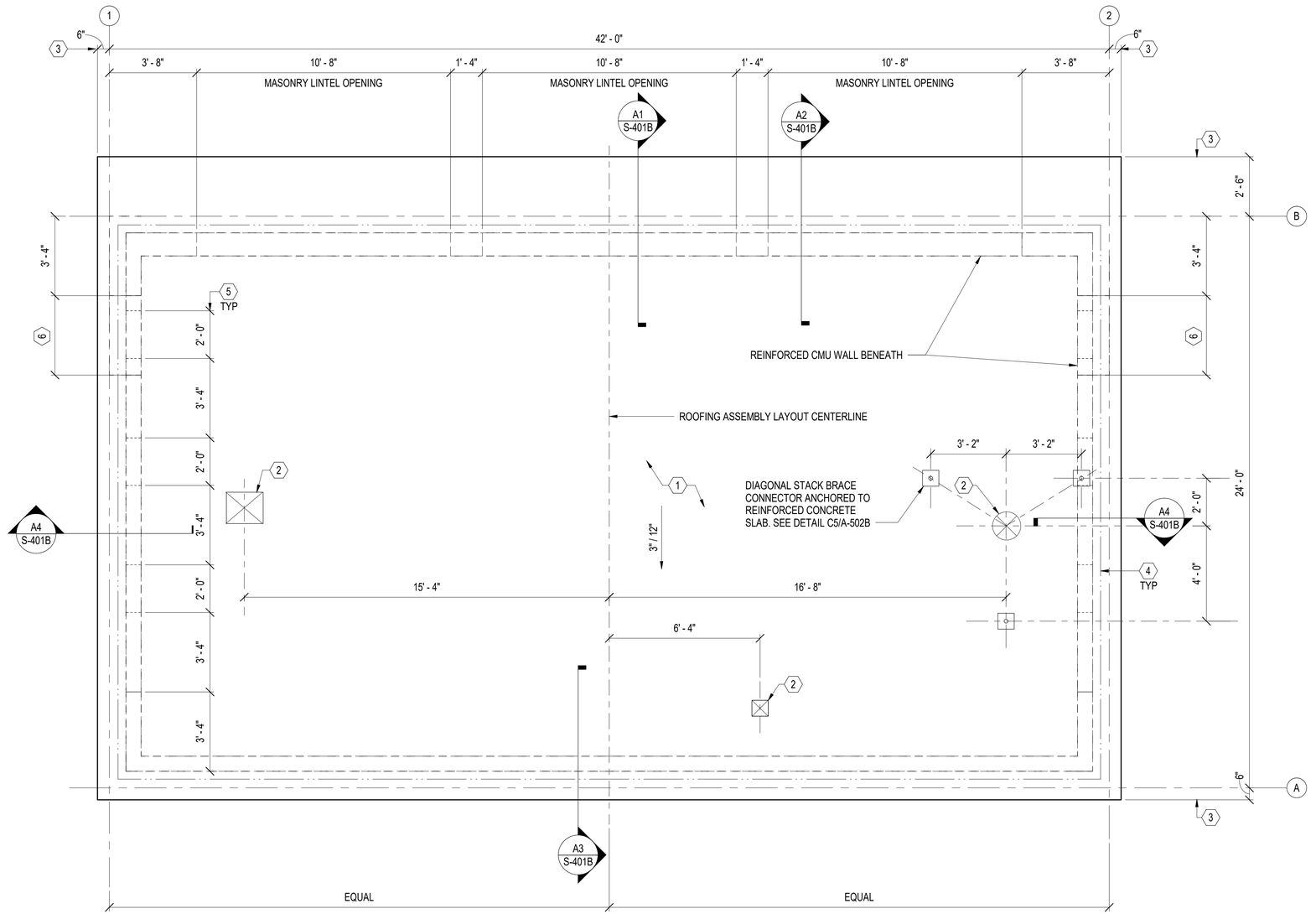

A1 FRAMING PLAN - ROOF

3/8" = 1'-0"

PLAN NORTH

0' 2' 4' 6'

GENERAL SHEET NOTES

A. REFER TO S-001B FOR GENERAL NOTES AND PLAN LEGEND AND S-501B FOR TYPICAL WALL AND ROOF SLAB DETAILS.

KEYNOTES

1 8-INCH CONCRETE SLAB REINFORCED WITH #5 AT 12" ON CENTER EACH DIRECTION TOP AND BOTTOM. TERMINATE TOP REINFORCING WITH STANDARD 90-DEGREE HOOKS EACH END. PLACE REINFORCING PARALLEL TO NUMBERED GRID LINES IN OUTER LAYER.

2 COORDINATE SIZE AND UNDERSLAB SUPPORT WITH MECHANICAL OPENING FOR MECHANICAL VENT. REFER TO S-501B FOR SLAB OPENING REINFORCING DETAIL.

3 EDGE OF CONCRETE ROOF SLAB OVERHANG.

4 FACE OF METAL WALL PANEL BELOW.

5 MASONRY WALL STEPS AT WALLS PARALLEL TO ROOF SLAB SLOPE. TURN DOWN ROOF SLAB TO TOP OF STEPPED WALL.

6 8" DEEP BOND BEAM LINTEL AT HEAD OF DOOR OPENING. REINFORCED WITH (2) #5 BOTTOM. BEAR LINTEL 8" EACH END.

SYM	DESCRIPTION	DATE	APPR

NAVFAC

SEAL

A/E INFO

APPROVED
James E. Gardner, R.A.

FOR COMMANDER NAVFAC

ACTIVITY
Approved by LCDR VINCE DEL GRECO, ROICC with PWD YORKTOWN, via Email.

SATISFACTORY TO DATE 03/26/2026

DES	DOB	DRW MTW	CHK CWJ
PM/DM	MMP/SLC		
BRANCH MANAGER	NEK		
CHIEF ENG/ARCH	JWJ		
FIRE PROTECTION	HPN		

DEPARTMENT OF THE NAVY
NAVAL FACILITIES ENGINEERING SYSTEMS COMMAND
MIDLANT DC CORE

NAVAL FACILITIES ENGINEERING SYSTEMS COMMAND - MID-ATLANTIC
NAVAL STATION - NORFOLK, VA

NAVAL WEAPONS STATION YORKTOWN, VIRGINIA
P171 WEAPON MAGAZINES
FORKLIFT CHARGING STATION

FRAMING PLAN - ROOF

SCALE: AS NOTED
EPROJECT NO.: 1737010
CONSTR. CONTR. NO. ##
NAVFAC DRAWING NO. 12942155
SHEET 471 OF 499

S-102B

DRAWFORM REVISION: 25 AUGUST 2020

3/31/2026 2:00:30 PM S-102B
C:\Users\miguel.walker\Documents\P171-1737010-S-R21-FORKLIFT_miguel.walker.rvt

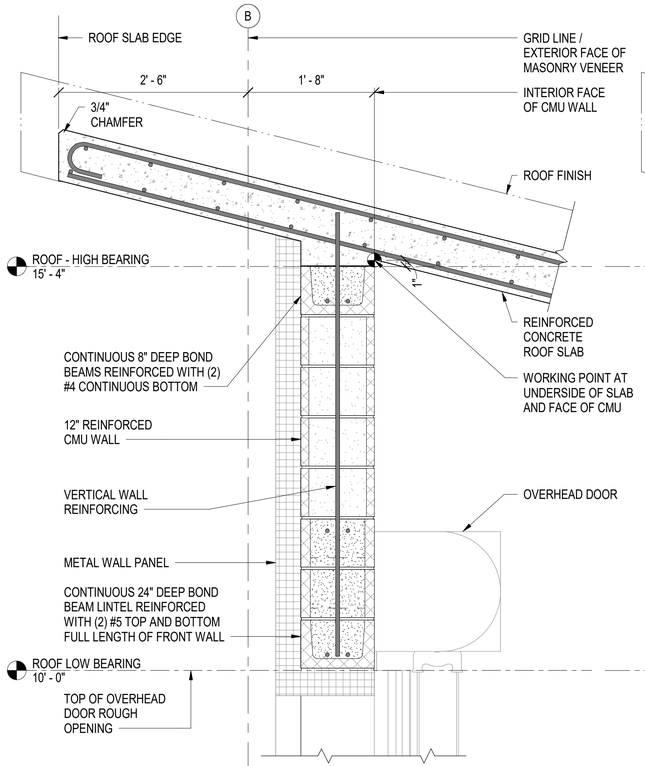

AT OVERHEAD DOOR

A1 SECTION AT FRONT WALL

1" = 1'-0" (S-101B) 0' 6" 1' 2'

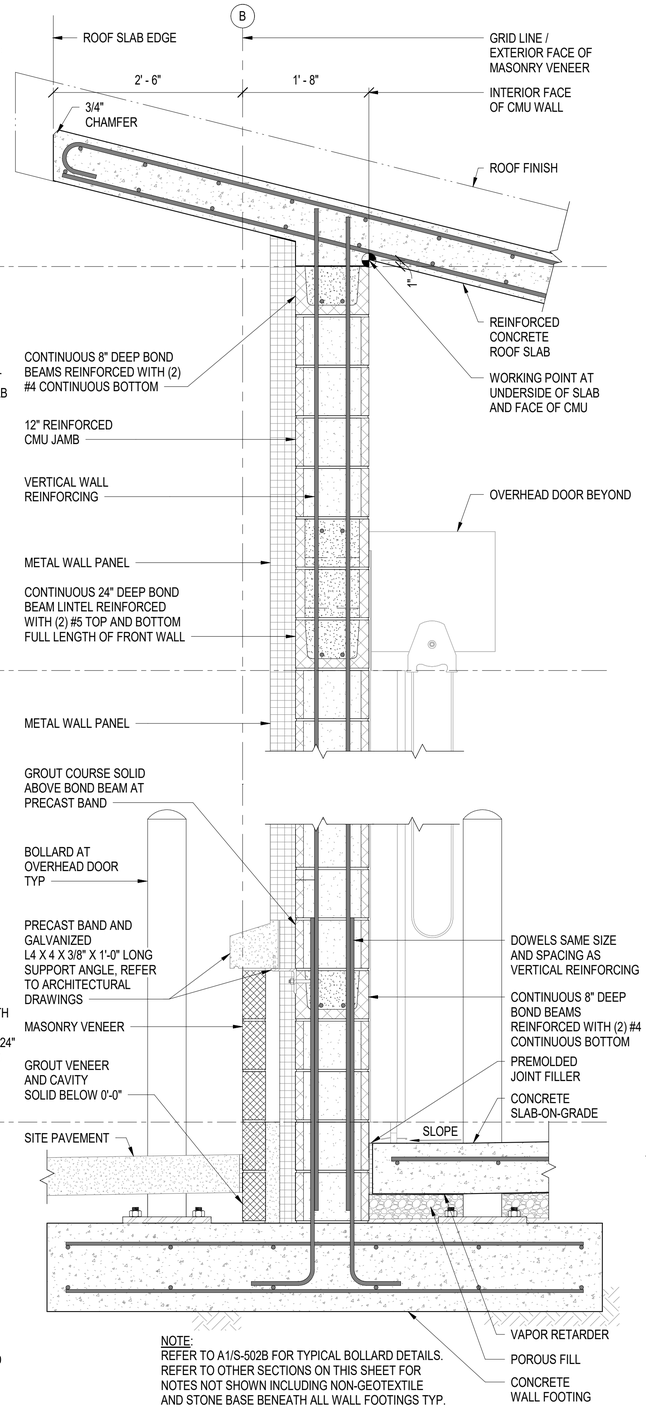

BETWEEN OVERHEAD DOORS

A2 SECTION AT FRONT WALL

1" = 1'-0" (S-101B) 0' 6" 1' 2'

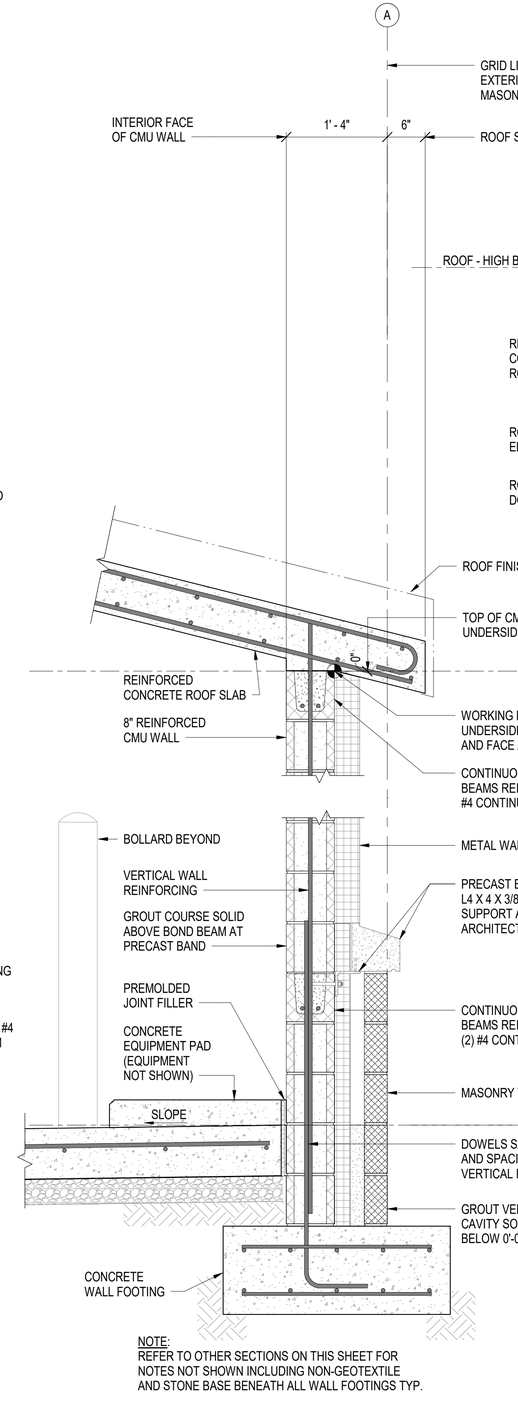

A3 SECTION AT REAR WALL

1" = 1'-0" (S-101B) 0' 6" 1' 2'

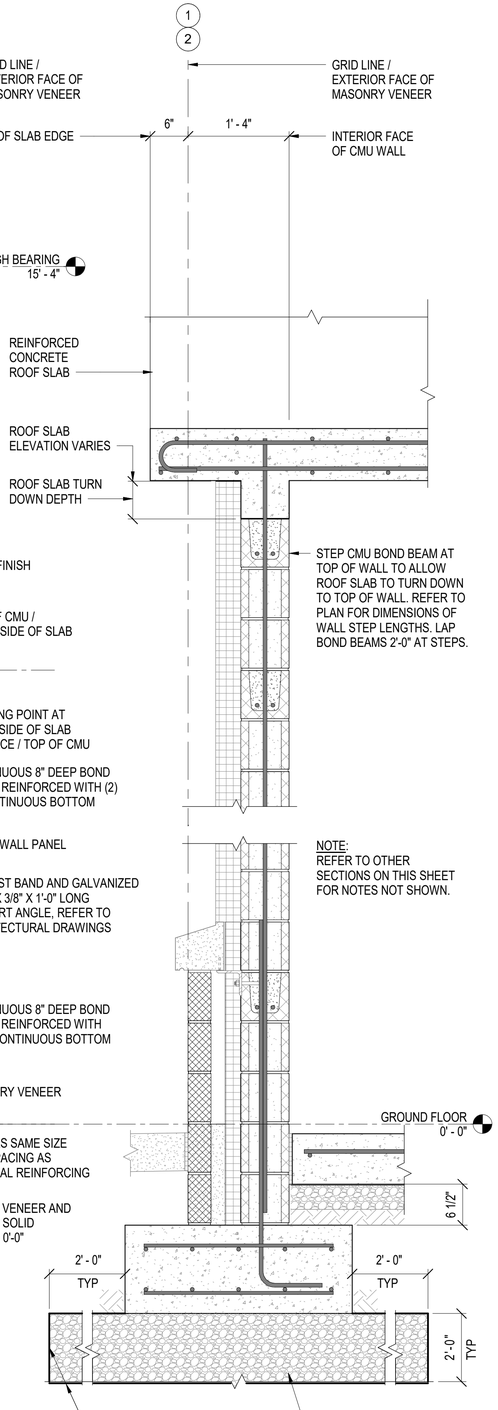

A4 SECTION AT SIDE WALL

1" = 1'-0" (S-101B) 0' 6" 1' 2'

SYM	DESCRIPTION	DATE	APPR

NAVFAC

SEAL

A/E INFO

APPROVED

FOR COMMANDER NAVFAC

ACTIVITY
Approved by LCDR VINCE DEL GRECO, ROICC with PWD YORKTOWN, via Email.

SATISFACTORY TO DATE 03/26/2026

DES DOB | DRW MTW | CHK CWJ

PM/DM MMP/SLC

BRANCH MANAGER NEK

CHIEF ENG/ARCH JWJ

FIRE PROTECTION HPN

DEPARTMENT OF THE NAVY
NAVAL FACILITIES ENGINEERING SYSTEMS COMMAND
MIDLANT DC CORE

NAVAL FACILITIES ENGINEERING SYSTEMS COMMAND - MID-ATLANTIC
NAVAL STATION - NORFOLK, VA

NAVAL WEAPONS STATION
YORKTOWN, VIRGINIA
P171 WEAPON MAGAZINES
FORKLIFT CHARGING STATION

ENLARGED SECTIONS

SCALE: AS NOTED

EPROJECT NO.: 1737010

CONSTR. CONTR. NO. ##

NAVFAC DRAWING NO. 12942156

SHEET 472 OF 499

S-401B

DRAWFORM REVISION: 25 AUGUST 2020

3/31/2026 2:00:31 PM S-401B
C:\Users\mguel.walker\Documents\P171-1737010-S-R21-FORKLIFT_mguel.walker.rvt

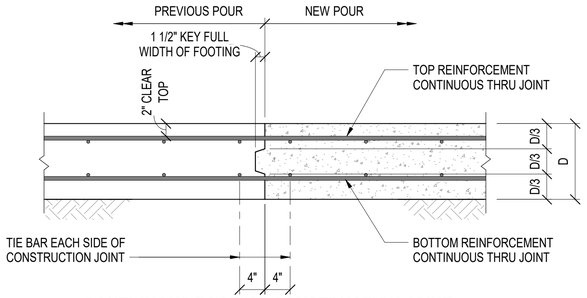

CONTINUOUS FOOTING CONSTRUCTION JOINT

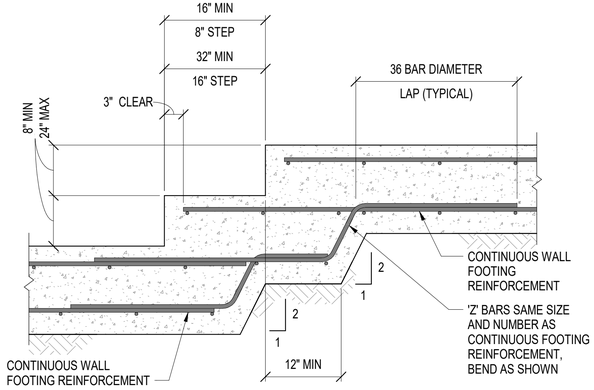

STEPPED CONTINUOUS FOOTING (SF)

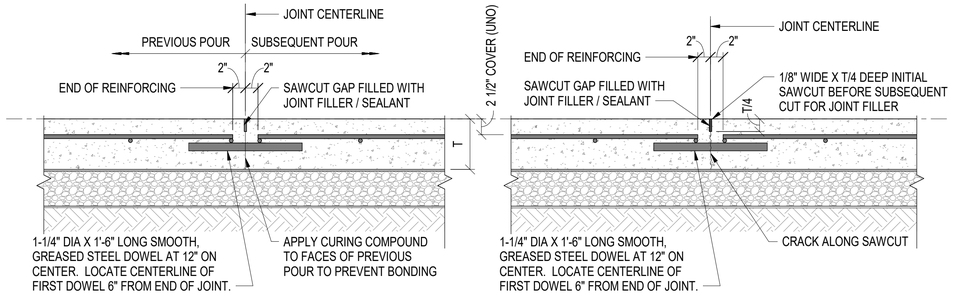

NOTES:
1. JOINT DETAILS ARE SHOWN FOR CONSTANT THICKNESS NON-SLOPING SLAB. DETAILS ARE SIMILAR AT AREAS WITH VARIABLE THICKNESS AND SLOPING SLABS.
2. JOINT FILLER: SAWCUT GAP ALONG DOWELED JOINTS TO CREATE JOINT FILLER GAP 1/4" MINIMUM TO 3/8" MAXIMUM WIDE X DEPTH REQUIRED FOR FILLER. AFTER SAW CUTTING, APPLY THIN LAYER OF CLEAN DRY SILICA SAND AT BOTTOM OF GAP TO PREVENT RUN OUT FROM CRACKS AT BOTTOM OF JOINTS. FILL REMAINDER OF SAWCUT GAPS WITH SEMI-RIGID EPOXY JOINT FILLER. STRIKE OFF LEVEL WITH TOP OF SLAB.

C3 DOWELED JOINTS

NOT TO SCALE

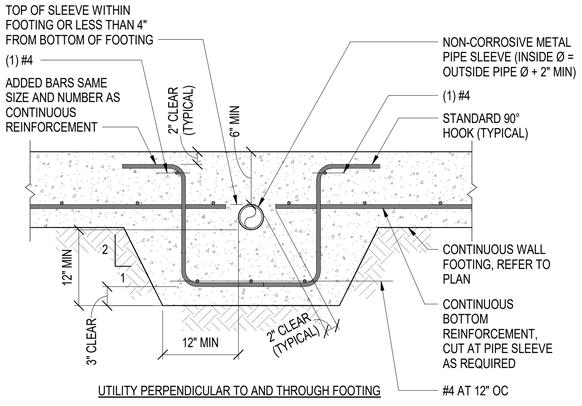

WALL FOOTING AT UTILITY LINES

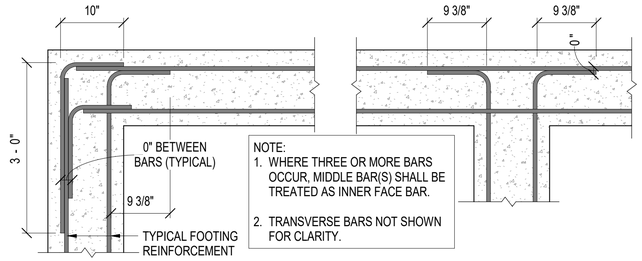

CONTINUOUS FOOTING REINFORCEMENT

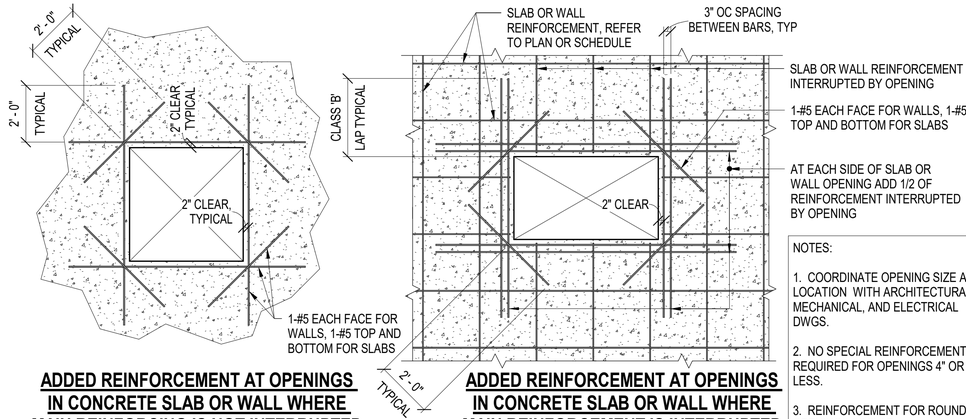

ADDED REINFORCEMENT AT OPENINGS IN CONCRETE SLAB OR WALL WHERE MAIN REINFORCING IS NOT INTERRUPTED

ADDED REINFORCEMENT AT OPENINGS IN CONCRETE SLAB OR WALL WHERE MAIN REINFORCEMENT IS INTERRUPTED

NOTES:
1. COORDINATE OPENING SIZE AND LOCATION WITH ARCHITECTURAL, MECHANICAL, AND ELECTRICAL DWGS.
2. NO SPECIAL REINFORCEMENT REQUIRED FOR OPENINGS 4" OR LESS.
3. REINFORCEMENT FOR ROUND OPENINGS SIMILAR.

B1 TYPICAL FOOTING DETAILS

NOT TO SCALE

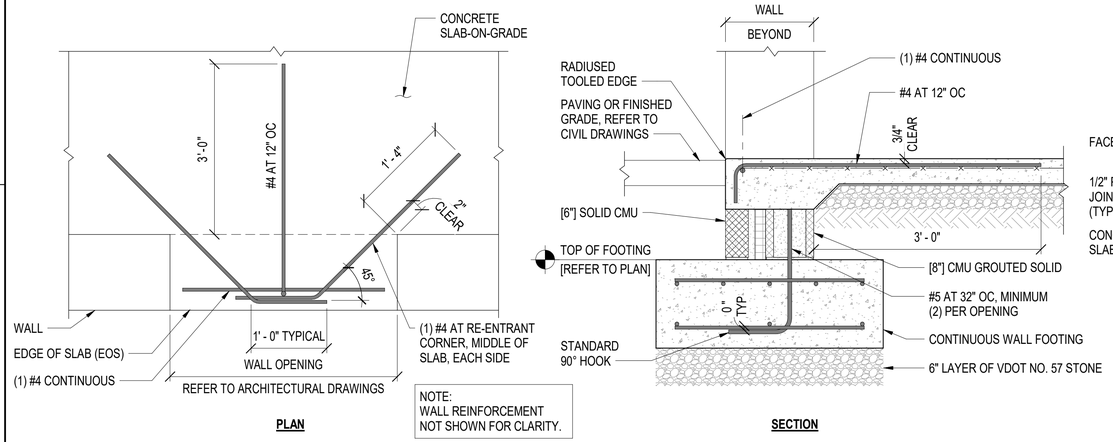

SLAB AT EXTERIOR OPENINGS

B3 TYPICAL CONCRETE SLAB AND WALL OPENING

NOT TO SCALE

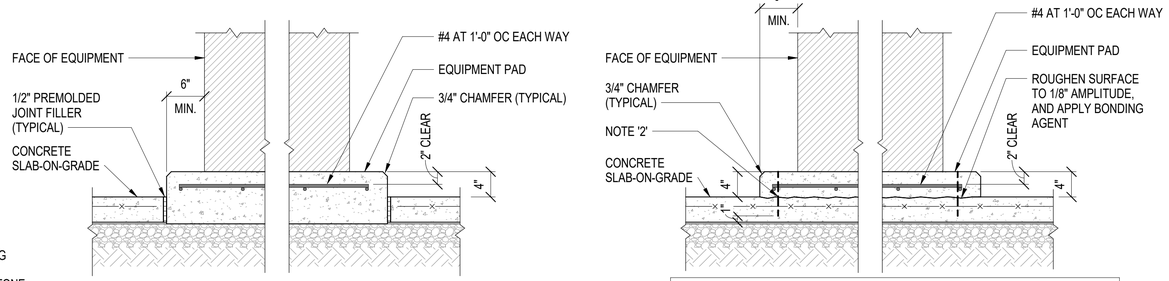

NOTES:
1. SLAB-ON-GRADE SHOWN. DETAIL SIMILAR AT ELEVATED SLAB.
2. IN LIEU OF ROUGHENING SURFACE AND APPLYING EPOXY BONDING AGENT, CONTRACTOR MAY DRILL AND EPOXY #4 DOWELS AT 16" OC AROUND PERIMETER EDGE OF PAD. DO NOT CUT SLAB-ON-GRADE REINFORCEMENT.

INTERIOR CONCRETE SLAB-ON-GRADE EQUIPMENT PAD

INTERIOR CONCRETE EQUIPMENT PAD

A1 TYPICAL SLAB-ON-GRADE DETAILS

NOT TO SCALE

SYM	DESCRIPTION	DATE	APPR

SEAL

A/E INFO

APPROVED
Digitally signed by
FOR COMMANDER NAVFAC

ACTIVITY
Approved by LCDR VINCE DEL GRECO, ROICC with PWD YORKTOWN, via Email.

SATISFACTORY TO DATE 03/26/2026

DES	DOB	DRW	MTW	CHK	CWJ
PM/DM			MMP/SLC		
BRANCH MANAGER			NEK		
CHIEF ENG/ARCH			JWJ		
FIRE PROTECTION			HPN		

DEPARTMENT OF THE NAVY
NAVAL FACILITIES ENGINEERING SYSTEMS COMMAND
MIDLANT DC CORE
NAVAL FACILITIES ENGINEERING SYSTEMS COMMAND - MID-ATLANTIC
NAVAL STATION - NORFOLK, VA
NAVAL WEAPONS STATION
YORKTOWN, VIRGINIA
P171 WEAPON MAGAZINES
FORKLIFT CHARGING STATION
TYPICAL DETAILS

SCALE: AS NOTED
EPROJECT NO.: 1737010
CONSTR. CONTR. NO. ##
NAVFAC DRAWING NO. 12942157
SHEET 473 OF 499

S-501B

DRAWFORM REVISION: 25 AUGUST 2020

3/31/20226 2:00:31 PM S-501B
C:\Users\miguel.walker\Documents\P171-1737010-S-R21-FORKLIFT_miguel.walker.rvt

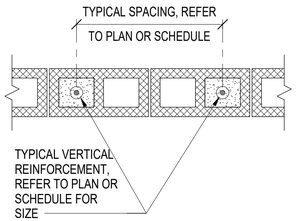

TYPICAL WALL SEGMENT

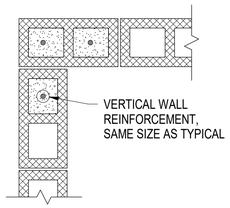

CORNER

NOTES:
1. REINFORCEMENT IS CONTINUOUS FOR FULL HEIGHT OF WALL, UNLESS OTHERWISE NOTED.

2. REINFORCEMENT SHOWN IS THE MINIMUM AT EACH GIVEN LOCATION. REFER TO PLANS, SECTIONS, AND OTHER DETAILS FOR ADDITIONAL REINFORCEMENT, IF REQUIRED.

3. REINFORCEMENT IS CENTERED IN CELLS UNLESS OTHERWISE NOTED.

4. HORIZONTAL JOINT AND BOND BEAM REINFORCEMENT IS NOT SHOWN FOR CLARITY.

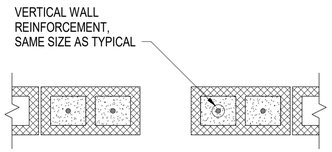

OPENING - WALL TERMINATION

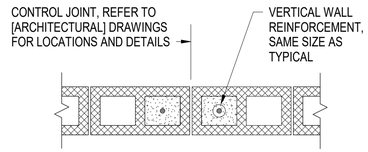

CONTROL JOINT

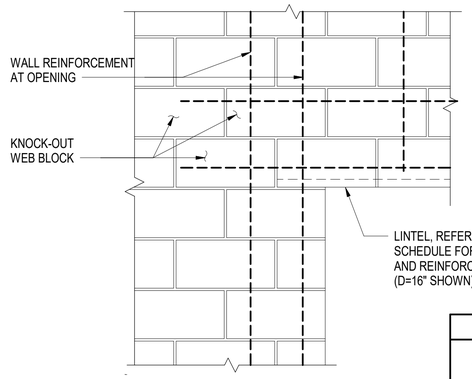

NOT AT CONTROL JOINT

NOTE:
VENEER MASONRY AND SUPPORT NOT SHOWN FOR CLARITY.

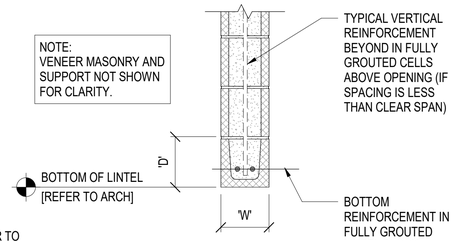

SECTION ('D' = 8")

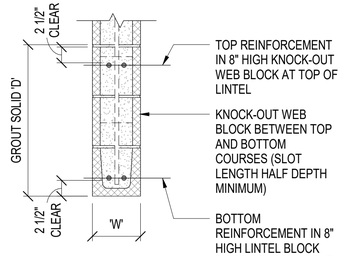

SECTION ('D' > 8")

BOND BEAM LINTEL SCHEDULE

CLEAR SPAN	DEPTH 'D'	WIDTH 'W'	REINFORCEMENT	
			BOTTOM	TOP
0' — 3' - 4"	8"	8"	(2) #4	N/A
3' - 5" — 6' - 4"	16"	8"	(2) #4	(2) #4
6' - 5" — 10' - 8"	24"	12"	(2) #5	(2) #5

C1 TYPICAL CONCRETE MASONRY WALL VERTICAL REINFORCEMENT

NOT TO SCALE

C3 TYPICAL CONCRETE MASONRY BOND BEAM LINTEL

NOT TO SCALE

NOTE:
POST-INSTALLED ANCHORS ARE 1"Ø THREADED RODS SET IN CONCRETE WITH ADHESIVE.

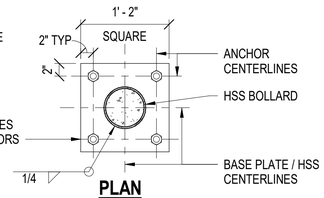

PLAN

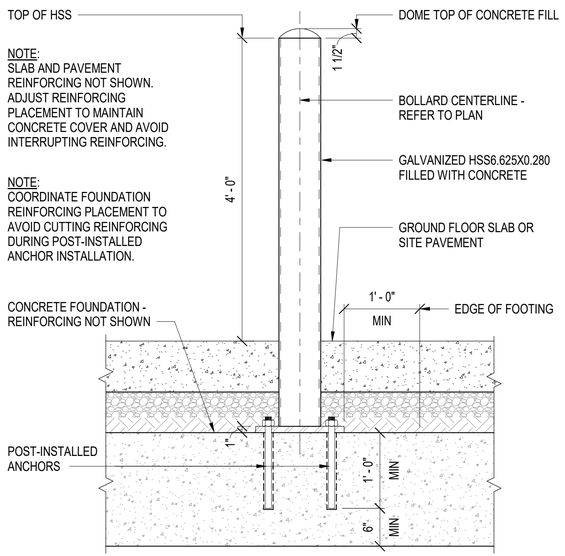

NOTE:
SLAB AND PAVEMENT REINFORCING NOT SHOWN. ADJUST REINFORCING PLACEMENT TO MAINTAIN CONCRETE COVER AND AVOID INTERRUPTING REINFORCING.

NOTE:
COORDINATE FOUNDATION REINFORCING PLACEMENT TO AVOID CUTTING REINFORCING DURING POST-INSTALLED ANCHOR INSTALLATION.

AT OVERHEAD DOORS (INTERIOR AND EXTERIOR)

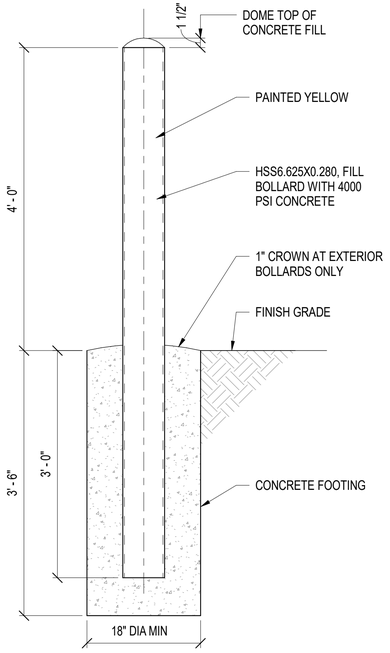

FREE STANDING

A1 TYPICAL BOLLARD DETAILS

NOT TO SCALE

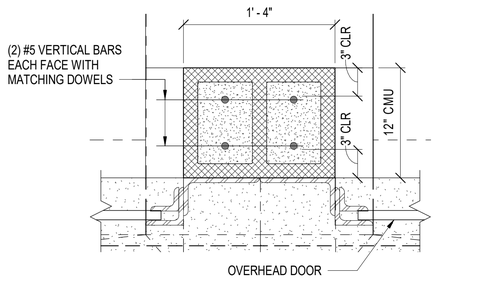

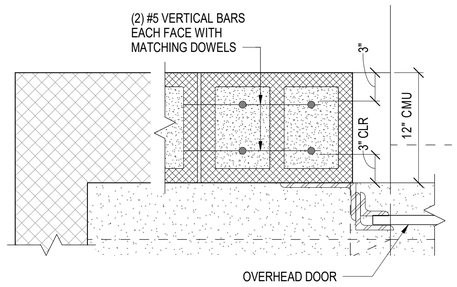

A3 REINFORCING AT FRONT DOOR JAMBS

NOT TO SCALE (S-101B)

APPROVED
FOR COMMANDER NAVFAC
ACTIVITY
Approved by LCDR VINCE DEL GRECO, ROICC with PWD YORKTOWN, via Email.
SATISFACTORY TO DATE 03/26/2026
DES DOB | DRW MTW | CHK CWJ
PM/DM MMP/SLC
BRANCH MANAGER NEK
CHIEF ENG/ARCH JWJ
FIRE PROTECTION HPN

DEPARTMENT OF THE NAVY
NAVAL FACILITIES ENGINEERING SYSTEMS COMMAND
MID-LANT DC CORE
NAVAL FACILITIES ENGINEERING SYSTEMS COMMAND - MID-ATLANTIC
NAVAL STATION - NORFOLK, VA
NAVAL WEAPONS STATION
YORKTOWN, VIRGINIA
P171 WEAPON MAGAZINES
FORKLIFT CHARGING STATION
TYPICAL DETAILS

SCALE: AS NOTED
EPROJECT NO.: 1737010
CONSTR. CONTR. NO. ##
NAVFAC DRAWING NO. 12942158
SHEET 474 OF 499
S-502B
DRAWFORM REVISION: 25 AUGUST 2020

SYM | DESCRIPTION | DATE | APPR

SEAL

A/E INFO

3/31/2026 2:00:32 PM S-502B
C:\Users\miguel.walker\Documents\P171-1737010-S-R21-FORKLIFT_miguel.walker.rvt

ARCHITECTURAL SYMBOLS

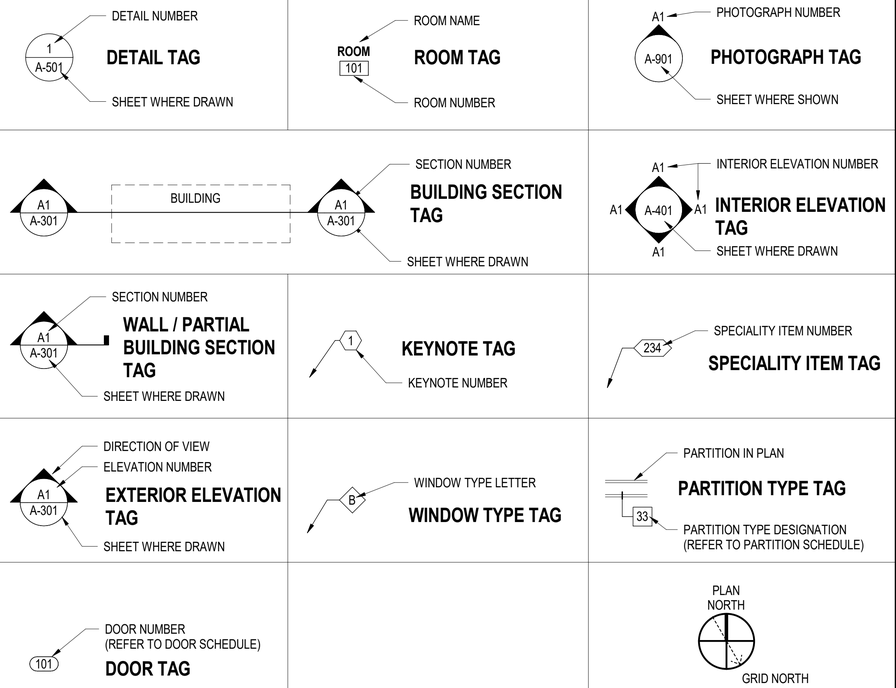

MATERIALS LEGEND

SECTION		ELEVATION	
	WOOD - ROUGH		CMU
	WOOD BLOCKING		CONCRETE
	PLYWOOD		
	CONCRETE MASONRY UNIT (CMU)		
	FACING MASONRY		
	CAST-IN-PLACE CONCRETE		
	STEEL		
	ALUMINUM		
	RIGID INSULATION		
	SAND / MORTAR / PLASTER		
	EARTH / COMPACT FILL		
	POROUS FILL / GRAVEL		
	CONCRETE, CEMENT GROUT		
	CMU, GROUT SOLID		
	NON-COMBUSTIBLE BOARD INSULATION		

GENERAL NOTES

A. ITEMS INDICATED TO BE REMOVED MUST BE DISPOSED OF OFF SITE UNLESS OTHERWISE NOTED.

B. PROVIDE NEW MATERIALS UNLESS SPECIFICALLY NOTED EXISTING, FURNISHED BY THE GOVERNMENT, OR PROVIDED BY THE GOVERNMENT.

C. WOOD BLOCKING AND MISCELLANEOUS STEEL SHOWN IN DETAILS AND SECTIONS MUST BE CONTINUOUS UNLESS SPECIFICALLY NOTED OTHERWISE.

D. VERIFY FIELD CONDITIONS AND DIMENSIONS PRIOR TO PROCEEDING WITH THE WORK. PROVIDE IMMEDIATE WRITTEN NOTIFICATION TO THE CONTRACTING OFFICER OF ANY DISCREPANCIES.

E. DEMOLITION OF PLUMBING, MECHANICAL AND ELECTRICAL ITEMS INDICATED ON THE ARCHITECTURAL DRAWINGS IS NOT INTENDED TO INCLUDE ALL NECESSARY DEMOLITION WORK FOR THESE ITEMS. REFER TO PLUMBING, MECHANICAL AND ELECTRICAL DEMOLITION DRAWINGS FOR ADDITIONAL INFORMATION.

F. DIMENSIONS INDICATED FOR THE WORK ARE TO FACE OF STUD, FACE OF MASONRY OR FACE OF EXISTING SURFACES UNLESS OTHERWISE NOTED.

G. STUDY AND COMPARE THE CONTRACT DOCUMENTS WITH EACH OTHER, AND AT ONCE, REPORT TO THE CONTRACTING OFFICER ANY ERRORS, INCONSISTENCIES OR OMISSIONS DISCOVERED. ANY CONSTRUCTION ACTIVITY PERFORMED KNOWING IT INVOLVES A RECOGNIZED ERROR, INCONSISTENCY OR OMISSION IN THE CONTRACT DOCUMENTS WITHOUT SUCH NOTICE TO THE CONTRACTING OFFICER, THE CONTRACTOR WILL ASSUME RESPONSIBILITY FOR SUCH PERFORMANCE AND WILL BEAR THE AMOUNT OF THE COST OF THE CONSTRUCTION.

H. THE ABBREVIATIONS, MATERIAL INDICATIONS, AND SYMBOLS SHOWN ON THIS SHEET MAY NOT ALL BE USED IN THESE DOCUMENTS.

ARCHITECTURAL ABBREVIATIONS

AB	ANCHOR BOLT	CPT	CARPET / COMMON PATH OF TRAVEL	GA	GAUGE	OC	ON CENTER	SIM	SIMILAR
ACS PNL	ACCESS PANEL	CT	CERAMIC TILE	GALV	GALVANIZED	OD	OUTSIDE DIAMETER / DIMENSION	SPC	SUSPENDED PLASTER CEILING
ADJ	ADJUST	CTR	CENTER	GFCI	GOVERNMENT FURNISHED CONTRACTOR INSTALLED	OPH	OPPOSITE HAND	SPEC	SPECIFICATION
ALT	ALTERNATE, ALTITUDE	D	DEPTH / DEEP	GL	GLASS / GROUND LEVEL	OPNG	OPENING	SQ	SQUARE
ALUM	ALUMINUM	DEG	DEGREE	GR	GROSS	OPP	OPPOSITE	STD	STANDARD
ANOD	ANODIZED	DEMO	DEMOLITION	GSU	GLAZED STRUCTURAL UNIT	OPT	OPTIONAL	STOR	STORAGE
APPROX	APPROXIMATE	DET	DETAIL	GYP	GYPSUM	PCT	PERCENT	STR	STRAIGHT STRIKE / STRINGERS
ARCH	ARCHITECT	DIA	DIAMETER	H	HIGH	PEJ	PREMOLDED EXPANSION JOINT	SUSP	SUSPENDED
ASPH	ASPHALT	DIM	DIMENSION	HB	HOSE BIB	PL	PROPERTY LINE	T&B	TOP AND BOTTOM
ATC	ACOUSTICAL TILE CEILING	DR	DRAIN	HDW	HARDWARE	PLAS	PLASTER / PLASTIC	TEL	TELEPHONE
BD	BOARD	DS	DOWNSPOUT	HM	HOLLOW METAL	PLYWD	PLYWOOD	THRES	THRESHOLD
BLDG	BUILDING	DW	DISHWASHER	HORIZ	HORIZONTAL	PNL	PANEL	THRU	THROUGH
BLW	BELOW	DWG	DRAWING	HT	HEIGHT	PRELIM	PRELIMINARY	TOS	TOP OF SLAB / STEEL
BM	BEAM	E	EAST	HVY	HEAVY	PSF	POUNDS PER SQUARE FOOT	TYP	TYPICAL
BOS	BOTTOM OF SLAB / STEEL	EA	EACH	ID	INSIDE DIAMETER	PSI	POUNDS PER SQUARE INCH	UON	UNLESS OTHERWISE NOTED
BOT	BOTTOM	EIFS	EXTERIOR INSULATION & FINISH SYSTEM	INSUL	INSULATION / INSULATED	PT	PAINT	V	VOLT
BRG	BEARING	EJ	EXPANSION JOINT	INT	INTERIOR	QT	QUARRY TILE	VAR	VARIATION
BSMT	BASEMENT	EL	ELEVATION	J-BOX	JUNCTION BOX	R	RADUIS / RISER	VB	VINYL BASE
BTWN	BETWEEN	ELEC	ELECTRIC / ELECTRICAL	JAN	JANITOR CLOSET	RA	RETURN AIR	VCT	VINYL COMPOSITION TILE
C TO C	CENTER TO CENTER	EPDM	ETHLENE PROPYLENE DIEN MONOMER	LAV	LAVATORY	RAD	RETURN AIR DUCT	VENT	VENTILATION / VENTILATOR
CAB	CABINET	EQ	EQUAL	LB	POUND	RB	RESILIENT BASE	VERT	VERTICAL
CEM	CEMENT	EQUIP	EQUIPMENT	LT	LIGHT	RD	ROOF DRAIN / ROAD	VEST	VESTIBULE
CER	CERAMIC	EW	EACH WAY	MACH	MACHINE	REFL	REFLECT	VS	VENT STACK
CI	CAST IRON	EWC	ELECTRIC WATER COOLER	MATL	MATERIAL	REFR	REFRIGERATION	VTR	VENT THROUGH ROOF
CIP	CAST IRON PIPE	EXH	EXHAUST	MAX	MAXIMUM	REINF	REINFORCE	VWC	VINYL WALL COVERING
CJ	CONTROL / CONSTRUCTION JOINT	EXIST	EXISTING	MECH	MECHANICAL	REQD	REQUIRED	W	WASTE / WATT / WEST / WIDE
CLG	CEILING	EXP	EXPANSION / EXPOSED / EXPAND	MFG	MANUFACTURING	REV	REVISION	W/	WITH
CLG REG	CEILING REGISTER	EXT	EXTERIOR	MIN	MINIMUM / MINUTE	RF	RESILIENT FLOORING	W/O	WITHOUT
CLR	CLEAR	FD	FLOOR DRAIN	MISC	MISCELLANEOUS	RL	ROOF LEADER	WC	WATER CLOSET / WALL COVERING
CMU	CONCRETE MASONRY UNIT	FDTN	FOUNDATION	ML	MATCH LINE	RM	ROOM	WD	WOOD
CND	CONDUIT	FF	FINISH FACE	MO	MASONRY OPENING / MOTOR OPERATED	RND	ROUND	WH	WATER HEATER
CNDS	CONDENSATE	FG	FIGURE	MTD	MOUNTED	RO	ROUGH OPENING	WP	WATERPROOFING / WEATHERPROOF / WORKING POINT
CNSTR	CONSTRUCTION	FHC	FIRE HOUSE CABINET	MTG	MOUNTING / MEETING	RS	ROUGH SAWN		
CNTR	CNTR	FIN FLR	FINISHED FLOOR	MTL	METAL	RT	RIGHT	WSCT	WAINSCOT
CO	CLEANOUT	FOF	FACE OF FINISH	MWP	MEMBRANE WATERPROOFING	S	SOUTH	WT	WEIGHT
COL	COLUMN	FOM	FACE OF MASONRY	N	NORTH	SAPC	SUSPENDED ACOUSTICAL PANEL CEILING	WWF	WELDED WIRE FABRIC
CONC	CONCRETE	FOS	FACE OF STUB / FACE OF SLAB	NIC	NOT IN CONTRACT	SCHED	SCHEDULE	XRMR	TRANSFORMER
CONN	CONNECT	FR	FRAME / FIRE RATING / FIRE RESISTANT	NO	NUMBER	SECT	SECTION		
CONT	CONTINUE / CONTINUOUS	FT	FOOT, FEET	NOM	NOMINAL	SF	SQUARE FOOT		
CORR	CORRIDOR	FTG	FOOTING	NTS	NOT TO SCALE	SH	SHINGLES / SINGLE HUNG		
				OA	OUTSIDE AIR				

SYM	DESCRIPTION	DATE	APPR

NAVFAC

SEAL

A/E INFO

APPROVED
Digitally signed by JEL
FOR COMMANDER NAVFAC

ACTIVITY: Approved by LCDR VINCE DEL GRECO, ROICC with PWD YORKTOWN, via Email.

SATISFACTORY TO DATE: 03/26/2026

DES	GJR	DRW	GJR	CHK	JEL

PM/DM	MME/WJW
BRANCH MANAGER	DJD
CHIEF ENG/ARCH	JWJ
FIRE PROTECTION	HPN

DEPARTMENT OF THE NAVY
NAVAL FACILITIES ENGINEERING SYSTEMS COMMAND
MIDLANT DOC CORE

NAVAL FACILITIES ENGINEERING SYSTEMS COMMAND - MID-ATLANTIC
NAVAL STATION - NORFOLK, VA

NAVAL WEAPONS STATION YORKTOWN, VIRGINIA
P171 WEAPON MAGAZINES
FORKLIFT CHARGING STATION

ARCHITECTURAL, ABBREVIATIONS, NOTES AND SYMBOLS

SCALE: AS NOTED
EPROJECT NO.: 1737010
CONSTR. CONTR. NO.

NAVFAC DRAWING NO.
12942161

SHEET 475 OF 499

A-001B

DRAWFORM REVISION: 25 AUGUST 2020

4/1/2026 12:42:49 PM A-001B
C:\Revit Local Files\P171-173701O-A-R21-FORKLIFT_gareth.ratti.rvt

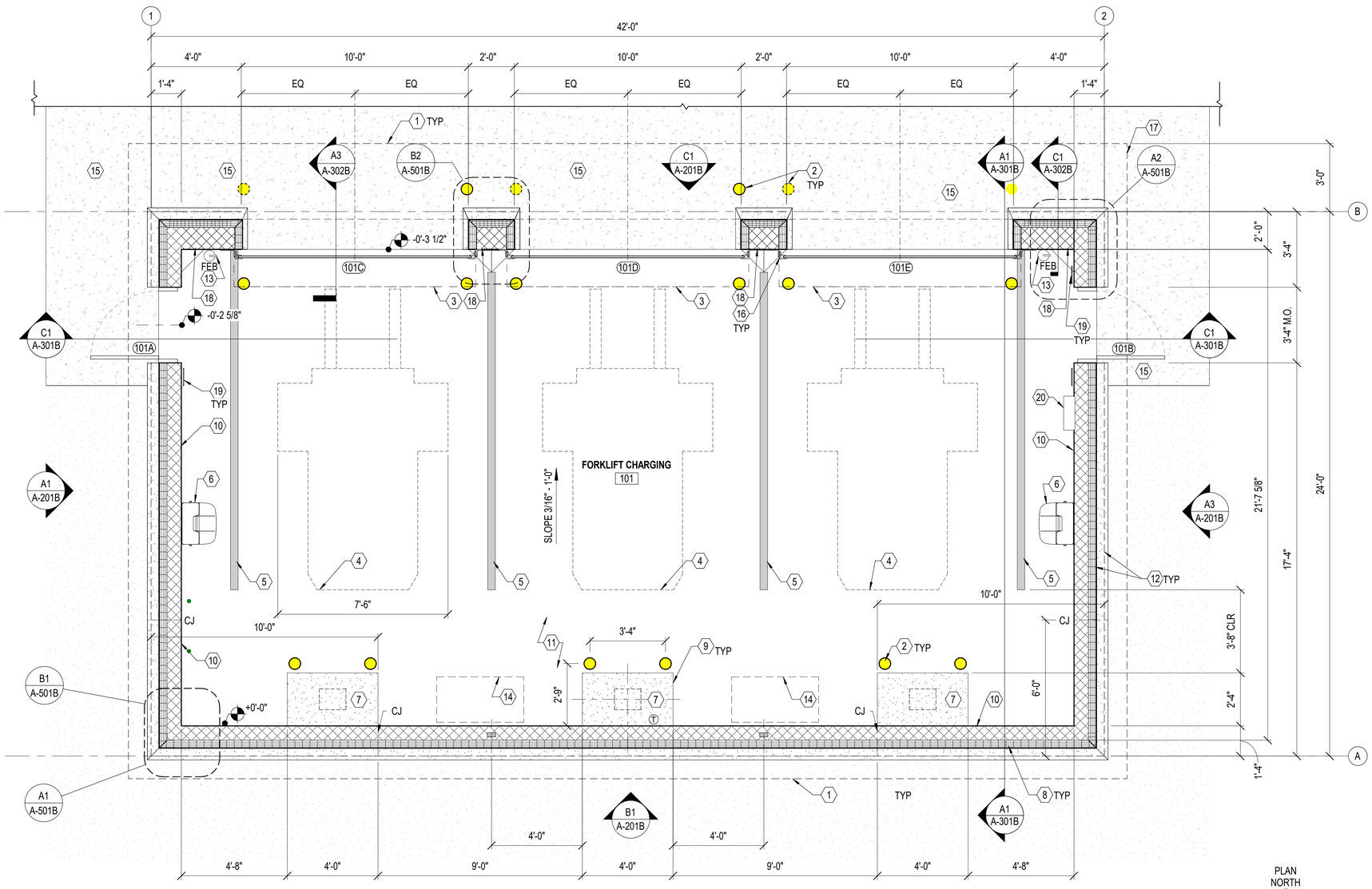

FLOOR PLAN - FORKLIFT CHARGING

SCALE: 3/8" = 1'-0"

GENERAL NOTES

A. THE DOOR AND FRAME SCHEDULE, TYPES, AND DETAILS ARE LOCATED ON SHEET A-601B

B. FOR STRUCTURAL FRAMING SEE STRUCTURAL

C. METAL PANEL JOINT LOCATIONS ARE INDICATED ON THE BUILDING ELEVATIONS SHEET A-201B

D. PRECAST ARCHITECTURAL WATER TABLE JOINT LOCATIONS ARE INDICATED ON THE BUILDING ELEVATIONS SHEET A-201B

KEYNOTES

#	
1	LINE OF SOFFIT ABOVE
2	CONCRETE FILLED GALVANIZED STEEL BOLLARD - SEE STRUCTURAL SHEET S-502B
3	PREFINISHED METAL OVERHEAD DOOR HOOD GALVANIZED STEEL AND SUPPORT BRACKETS, COATED
4	OUTLINE OF FORKLIFT - N.I.C
5	4" WIDE PARKING SPACE LINE MARKING, COLOR: WHITE
6	PORTABLE EYEWASH STATION, ANCHOR TO CMU WALL. ITEM INCLUDED AS PART OF FFE
7	BATTERY CHARGER - N.I.C - MOUNTED ON 4" CONCRETE PAD
8	INSULATED METAL WALL PANEL ASSEMBLY
9	4" CONCRETE EQUIPMENT PAD
10	8" REINFORCED CMU, SEE STRUCTURAL
11	6" REINFORCED CONCRETE FLOOR SLAB SLOPED 3/16" PER 1'-0" FROM BACK WALL TO FRONT WALL FOR STANDING WATER DRAINAGE DISCHARGE. SEE STRUCTURAL
12	PREFINISHED INSULATED METAL WALL PANEL SYSTEM. ANCHOR TO CMU BEARING WALL. CAVITY WALL ASSEMBLY BELOW WITH ARCHITECTURAL PRECAST WATER TABLE AND 4" GROUND FACE CMU SHOWN DASHED BELOW
13	FIRE EXTINGUISHER, MOUNTED TO BRACKET, 4'-0" AFF. TO CARRYING HANDLE. MOUNTING BRACKETS, FIRE EXTINGUISHERS AND OPERATING INSTRUCTIONS TO BE PROVIDED AND INSTALLED BY ACTIVITY
14	METAL CABINET NIC
15	CONCRETE PAD/ RAMP/ WALKWAY AREA. SEE CIVIL FOR EXTENTS
16	OVERHEAD DOOR TRACK, GALVANIZED STEEL, COATED
17	LINE OF ROOF ABOVE
18	12" REINFORCED CMU,SEE STRUCTURAL
19	PROVIDE EXIT SIGN TYPE Q, DOOR TYPE 3. REFER TO SEGREGATION DRAWINGS SHEETS AG501A AND AG502A
20	HYDROGEN DECTOR CONTROL PANEL, SEE MECH

GRAPHIC SCALE(S)

3/8" = 1' - 0" 0 1' 2' 3' 4' 5' 10'

SYM	DESCRIPTION	DATE	APPR

NAVFAC

SEAL

A/E INFO

APPROVED
Commander, NAVFAC

FOR COMMANDER NAVFAC

ACTIVITY
Approved by LCDR VINCE DEL GRECO, ROICC with PWD YORKTOWN, via Email.

SATISFACTORY TO DATE 03/26/2026

DES	GJR	DRW GJR	CHK JEL
PM/DM	MME/WJW		
BRANCH MANAGER	DJD		
CHIEF ENG/ARCH	JWJ		
FIRE PROTECTION	HPN		

DEPARTMENT OF THE NAVY
NAVAL FACILITIES ENGINEERING SYSTEMS COMMAND
MIDLANT DC CORE

NAVAL FACILITIES ENGINEERING SYSTEMS COMMAND - MID-ATLANTIC
NAVAL STATION - NORFOLK, VA

NAVAL WEAPONS STATION
YORKTOWN, VIRGINIA
P171 WEAPON MAGAZINES
FORKLIFT CHARGING STATION

FLOOR PLAN

SCALE:	AS NOTED
EPROJECT NO.:	1737010
CONSTR. CONTR. NO.	
NAVFAC DRAWING NO.	12942162
SHEET	476 OF 499

A-101B

DRAWFORM REVISION: 25 AUGUST 2020

4/20/2026 7:53:37 AM A-101B
C:\Revit Local Files\P171-1737010-A-R21-FORKLIFT_gareth.rattli.rvt

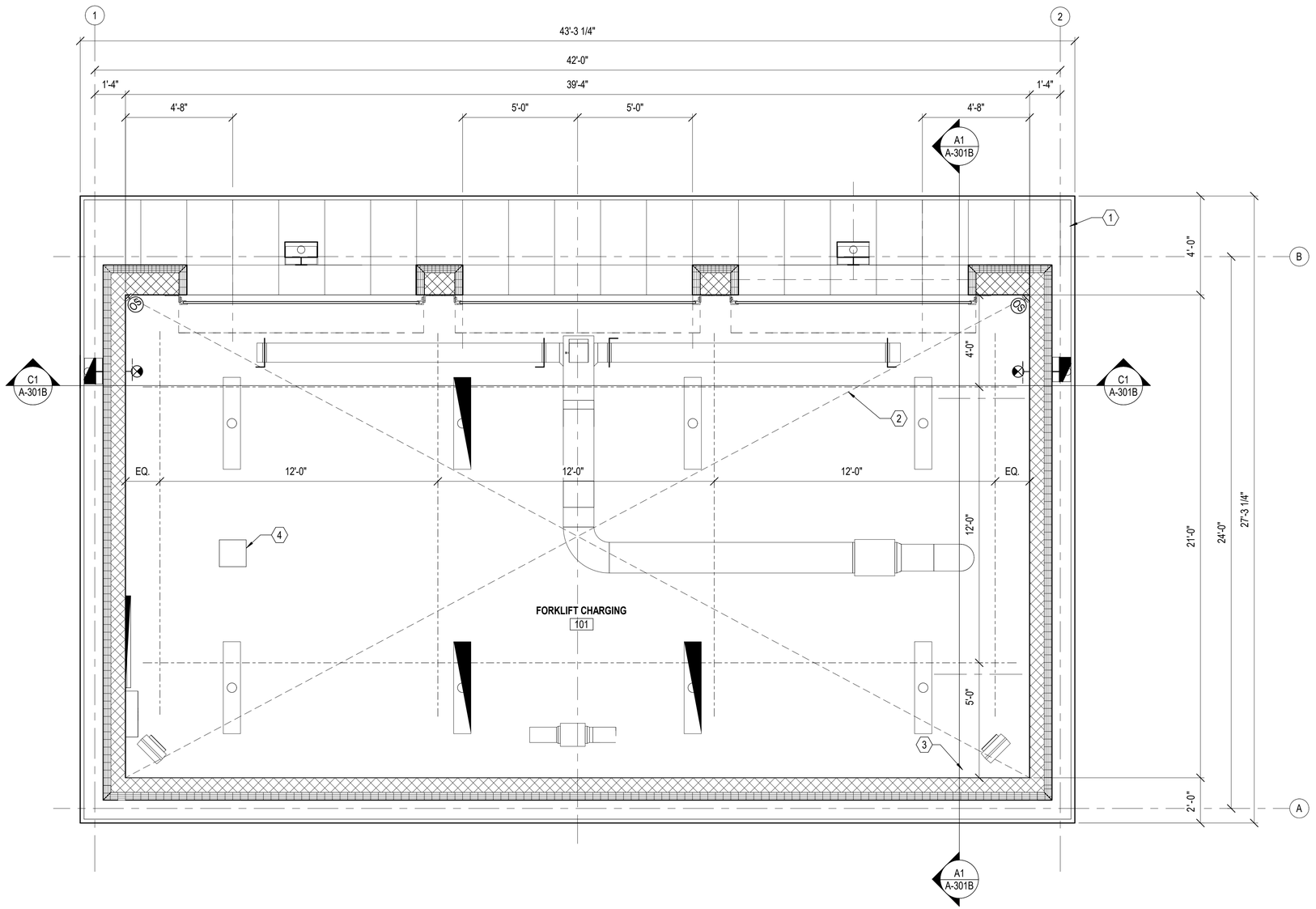

REFLECTED CEILING PLAN - FORKLIFT CHARGING

SCALE: 3/8" = 1'-0"

PLAN NORTH

GENERAL NOTES

A. REFER TO SHEET A-001 FOR ARCHITECTURAL SYMBOLS, LEGENDS, ABBREVIATIONS, AND GENERAL NOTES.

B. CENTER LIGHTING FIXTURES (BOTH WAYS) UNLESS OTHERWISE NOTED.

KEYNOTES

#	
1	METAL SOFFIT PANEL
2	NO CEILING IN THIS SPACE
3	ELECTRICAL PANEL BOARD
4	GRAVITY VENTILATOR DUCTWORK

REFLECTED CEILING PLAN LEGEND

SYMBOL	DESCRIPTION
	NO CEILING - EXPOSED TO ROOF DECK ABOVE.
	LIGHT FIXTURE. REFER TO ELECTRICAL DRAWINGS.
	EXIT SIGN. REFER TO ELECTRICAL DRAWINGS.
	EMERGENCY LIGHTING. REFER TO ELECTRICAL DRAWINGS.
	CEILING RETURN OR EXHAUST. REFER TO MECHANICAL DRAWINGS.
	UNIT HEATER. REFER TO MECHANICAL DRAWINGS.

GRAPHIC SCALE(S)

3/8" = 1' - 0" 0 1' 2' 3' 4' 5' 10'

SYM	DESCRIPTION	DATE	APPR

NAVFAC

SEAL

A/E INFO

APPROVED
Vincent J. Greco, R.A.

FOR COMMANDER NAVFAC

ACTIVITY
Approved by LCDR VINCE DEL GRECO, ROICC with PWD YORKTOWN, via Email,

SATISFACTORY TO DATE 03/26/2026

DES	GJR	DRW GJR	CHK JEL

PM/DM	MME/WJW
BRANCH MANAGER	DJD
CHIEF ENG/ARCH	JWJ
FIRE PROTECTION	HPN

DEPARTMENT OF THE NAVY
NAVAL FACILITIES ENGINEERING SYSTEMS COMMAND
MIDLANT DC CORE

NAVAL FACILITIES ENGINEERING SYSTEMS COMMAND - MID-ATLANTIC
NAVAL STATION - NORFOLK, VA

NAVAL WEAPONS STATION YORKTOWN, VIRGINIA
P171 WEAPON MAGAZINES
FORKLIFT CHARGING STATION

REFLECTED CEILING PLAN

SCALE: AS NOTED
EPROJECT NO.: 1737010
CONSTR. CONTR. NO.

NAVFAC DRAWING NO.
12942163

SHEET 477 OF 499

A-102B

DRAWFORM REVISION: 25 AUGUST 2020

4/1/2026 12:42:53 PM A-102B
C:\Revit Local Files\P171-1737010-A-R21-FORKLIFT_gareth.ratti.rvt

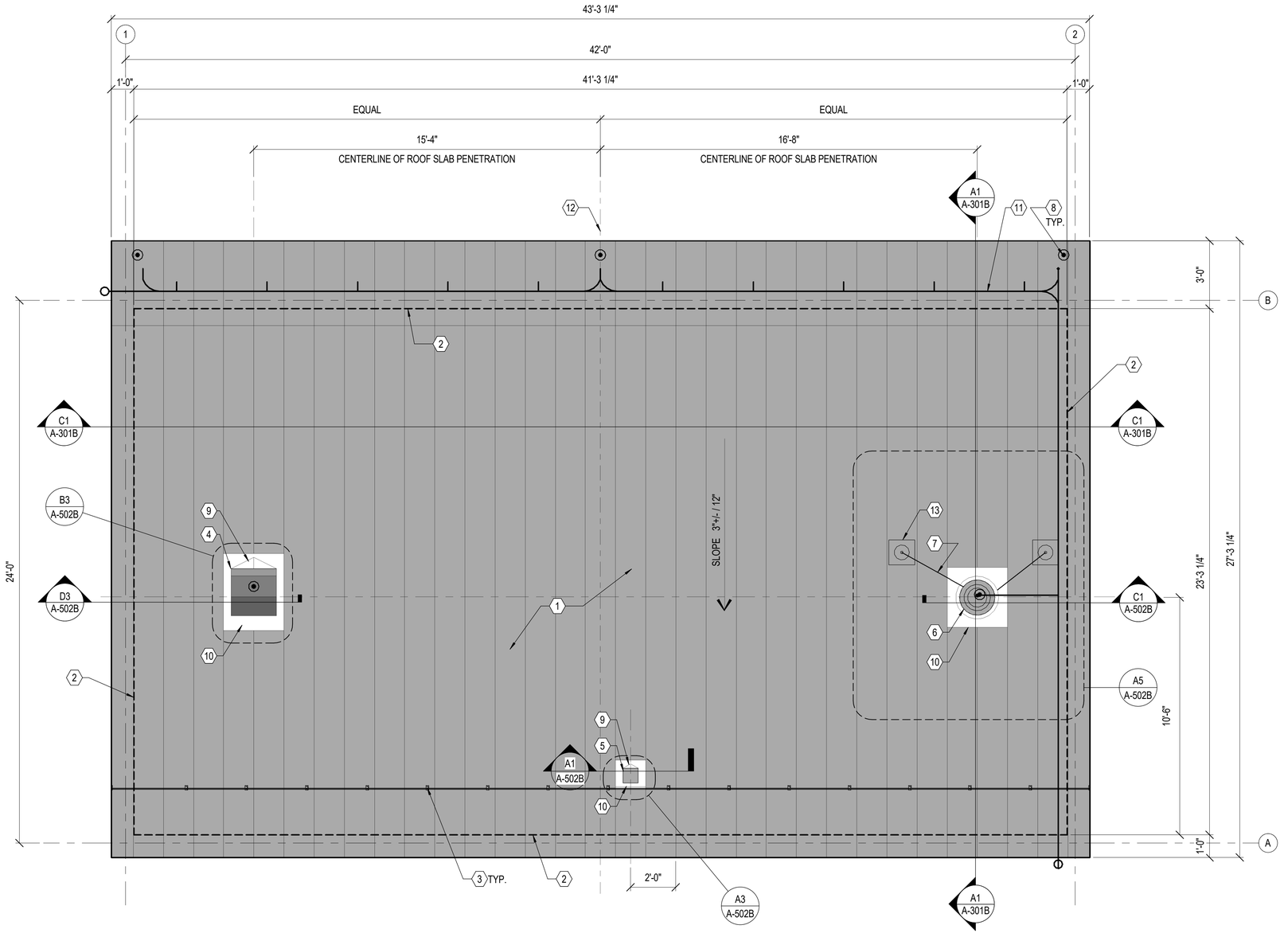

ROOF PLAN - FORKLIFT CHARGING

SCALE: 3/8" = 1'-0"

PLAN NORTH

GENERAL NOTES

A. FOR STRUCTURAL FRAMING AND INSULATED METAL PANEL WALL AND ROOF ENCLOSURE, SEE STRUCTURAL

B. ROOF PANELS ARE SHOWN ON ARCHITECTURAL DRAWINGS FOR DESIGN INTENT PURPOSES ONLY. SEE MANUFACTURER'S SUPPLEMENTAL FOR ROOFING DETAILS AND LOCATIONS OF ROOFING ACCESSORIES, INCLUDING SNOW

KEYNOTES

1 ROOFING: 2" STANDING SEAM, HOT DIPPED STEEL WITH HIGH-PERFORMANCE COATING, STAINLESS STEEL CLIPS AND FASTENERS

2 LINE OF EXTERIOR METAL PANEL WALL BELOW

3 PROVIDE TWO RAIL SNOW GUARD ASSEMBLY WITH CLAMP TYPE CONNECTORS AT STANDING SEAMS

4 GRAVITY VENTILATOR, SEE MECHANICAL

5 EXHAUST AIR VENT

6 EXHAUST AIR VENT STACK

7 EXHAUST STACK ROOF BRACE

8 LIGHTNING PROTECTION AIR TERMINAL, SEE ELECTRICAL

9 ROOF CRICKETS AT MECHANICAL PENETRATIONS

10 FLASHING PAN AT ROOF PENETRATION

11 PROVIDE LIGHTNING PROTECTION MAIN CONDUCTOR STANDING SEAM CLAMP TYPE CABLE FASTENERS AT 2'-8" O.C. MAX.

12 LAYOUT STANDING SEAM METAL ROOF TO ALIGN CENTER SEAM OF ROOF ASSEMBLY WITH CENTER OF BUILDING. COORDINATE ROOF PENETRATIONS AND STANDING SEAM LAYOUT TO MINIMIZE THE NUMBER OF SEAMS ASSOCIATED WITH PENETRATION FLASHING ASSEMBLIES

13 HYDROGEN EXHAUST STACK DIAGONAL BRACE ANCHOR

GRAPHIC SCALE(S)

3/8" = 1' - 0" 0 1' 2' 3' 4' 5' 10'

SYM	DESCRIPTION	DATE	APPR

NAVFAC

SEAL

A/E INFO

APPROVED
James E. Gardner, R.A.
FOR COMMANDER NAVFAC

ACTIVITY
Approved by LCDR VINCE DEL GRECO, ROICC with PWD YORKTOWN, via Email,

SATISFACTORY TO DATE 03/26/2026

DES	GJR	DRW GJR	CHK JEL
PM/DM	MME/WJW		
BRANCH MANAGER	DJD		
CHIEF ENG/ARCH	JWJ		
FIRE PROTECTION	HPN		

DEPARTMENT OF THE NAVY
NAVAL FACILITIES ENGINEERING SYSTEMS COMMAND
MIDLANT DC CORE

NAVAL FACILITIES ENGINEERING SYSTEMS COMMAND - MID-ATLANTIC
NAVAL STATION - NORFOLK, VA

NAVAL WEAPONS STATION YORKTOWN, VIRGINIA
P171 WEAPON MAGAZINES
FORKLIFT CHARGING STATION

ROOF PLAN

SCALE: AS NOTED
EPROJECT NO.: 1737010
CONSTR. CONTR. NO.

NAVFAC DRAWING NO.
12942164

SHEET 478 OF 499

A-103B

DRAWFORM REVISION: 25 AUGUST 2020

4/1/2026 12:42:56 PM A-103B
C:\Revit Local Files\P171-1737010-A-R21-FORKLIFT_gareth.ratti.rvt

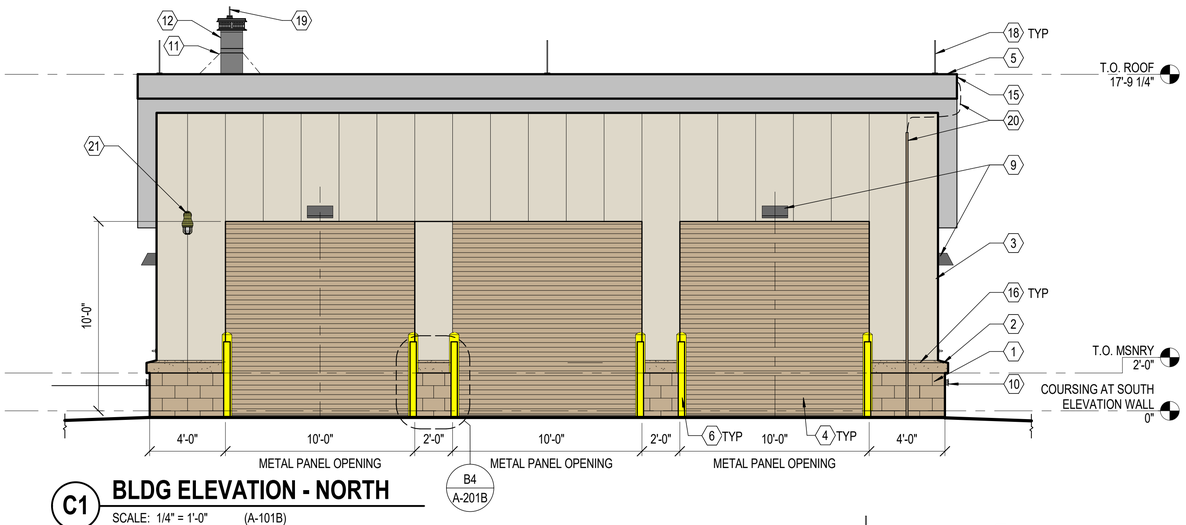

C1 BLDG ELEVATION - NORTH

SCALE: 1/4" = 1'-0" (A-101B)

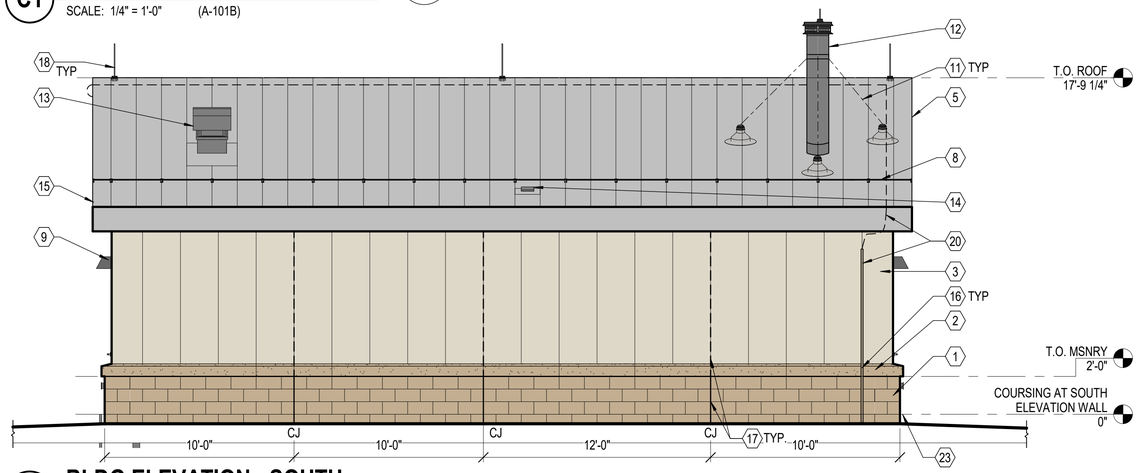

B1 BLDG ELEVATION - SOUTH

SCALE: 1/4" = 1'-0" (A-101B)

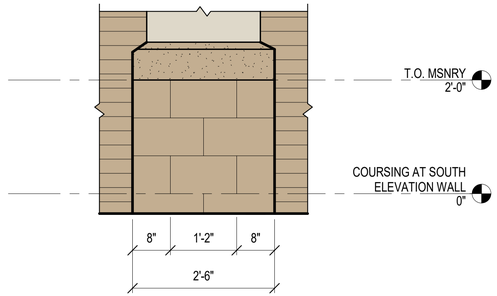

B4 MASONRY COURSING ELEVATION BETWEEN O.H. DOORS

SCALE: 3/4" = 1'-0" (A-201B)

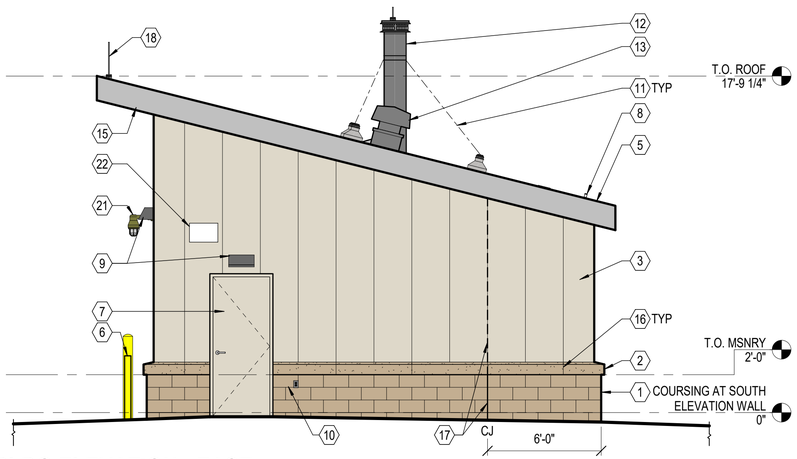

A1 BLDG ELEVATION - EAST

SCALE: 1/4" = 1'-0" (A-101B)

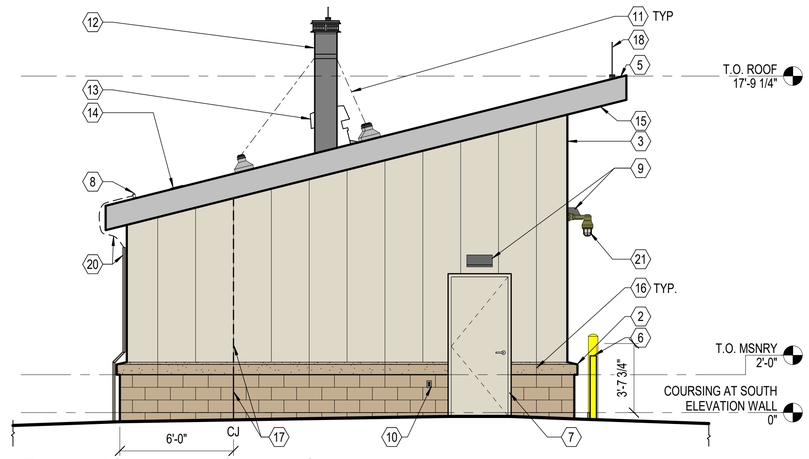

A3 BLDG ELEVATION - WEST

SCALE: 1/4" = 1'-0" (A-101B)

GENERAL NOTES

A. FOR STRUCTURAL FRAMING OF WALLS AND ROOF, SEE STRUCTURAL DRAWINGS

B. FOR DOOR TYPES AND LOUVER TYPES REFER TO A-601B

C. USE THE FEDERAL STANDARD NUMBER TO MATCH ALL COLORS LISTED ON THE EXTERIOR FINISH SCHEDULE

KEYNOTES

#	
1	4" GROUND FACE CMU (CMU-01) PROVIDE 'L' SHAPE CORNER BLOCKS WITH 8" RETURN THROUGHOUT
2	PRE CAST ACCENT BAND (PAB-01)
3	2'-0" WIDE PREFINISHED INSULATED METAL WALL PANEL SYSTEM (MP-01)
4	PREFINISHED METAL OVERHEAD COILING DOOR (PT-01)
5	ROOFING: 2" STANDING SEAM, METAL ROOF ASSEMBLY WITH STAINLESS STEEL CLIPS AND FASTENERS. PROVIDE HIGH PERFORMANCE COATING FOR ESC C4 CLASSIFICATION
6	CONCRETE FILLED STEEL BOLLARD (PT-03)
7	HOLLOW METAL DOOR AND FRAME (PT-02)
8	PROVIDE TWO RAIL SNOW GUARD ASSEMBLY WITH CLAMP TYPE CONNECTORS AT STANDING SEAMS
9	LIGHT FIXTURE - SEE D2/A-501B
10	EXTERIOR OUTLET - SEE D1/A-501B
11	EXHAUST STACK ROOF BRACE
12	HYDROGEN GAS EXHAUST SYSTEM STACK
13	GRAVITY VENTILATOR, SEE MECHANICAL
14	AIR INTAKE, SEE MECHANICAL
15	PREFINISHED METAL FASCIA (PT-04)
16	PRE CAST ACCENT BAND PRE CAST JOINTS. 2'-0" FROM CMU CORNERS AND SPACED 4'-0" O.C. BETWEEN
17	MASONRY CONTROL JOINT. SEE DETAIL A3/A-601B
18	LIGHTNING PROTECTION AIR TERMINAL, SEE ELECTRICAL
19	LIGHTNING PROTECTION AIR TERMINAL, NOT FULLY SHOWN FOR CLARITY
20	LIGHTNING PROTECTION DOWN CONDUCTOR
21	SIGNAL LIGHT, SEE ELECTRICAL
22	BUILDING IDENTIFICATION SIGNAGE AS PER THE INSTALLATION APPEARANCE PLAN (IAP)
23	CMU COURSING ALIGNMENT WITH HIGH ELEVATION OF FINISHED FLOOR SEE SHEET A-101B. DOOR SILLS ARE AT NEGATIVE ELEVATIONS

EXTERIOR FINISH SCHEDULE

CODE	MATERIAL	FEDERAL STANDARD COLOR #	COLOR
PAB-01	PRECAST ACCENT BAND	33510	DARK BEIGE
CMU-01	GROUND FACE CMU	33510	DARK BEIGE
MP-01	METAL WALL PANEL	27722	LIGHT BEIGE
PT-01	OVERHEAD DOOR	33510	DARK BEIGE
PT-02	DOOR	27722	LIGHT BEIGE
PT-03	BOLLARD	20152	BRICK RED
PT-04	METAL FASCIA/ SOFFIT	MATCH ROOF	SILVER
MP-01	METAL ROOF	17178	SILVER

GRAPHIC SCALE(S)

1/4" = 1' - 0" 0 1' 5' 10' 15'

3/4" = 1' - 0" 0 6" 1' 2' 3' 4' 5'

SYM	DESCRIPTION	DATE	APPR

SEAL

A/E INFO

APPROVED

FOR COMMANDER NAVFAC

ACTIVITY
Approved by LCDR VINCE DEL GRECO, ROICC with PWD YORKTOWN, via Email.

SATISFACTORY TO DATE 03/26/2026

DES	GJR	DRW	GJR	CHK	JEL

PM/DM MME/WJW

BRANCH MANAGER DJD

CHIEF ENG/ARCH JWJ

FIRE PROTECTION HPN

DEPARTMENT OF THE NAVY
NAVAL FACILITIES ENGINEERING SYSTEMS COMMAND
MIDLANT DC CORE

NAVAL FACILITIES ENGINEERING SYSTEMS COMMAND - MID-ATLANTIC
NAVAL STATION - NORFOLK, VA

NAVAL WEAPONS STATION YORKTOWN, VIRGINIA
P171 WEAPON MAGAZINES
FORKLIFT CHARGING STATION

BUILDING ELEVATIONS

SCALE: AS NOTED

EPROJECT NO.: 1737010

CONSTR. CONTR. NO.

NAVFAC DRAWING NO.
12942165

SHEET 479 OF 499

A-201B

DRAWFORM REVISION: 25 AUGUST 2020

4/1/2026 12:42:58 PM A-201B
C:\Revit Local Files\P171-173701O-A-R21-FORKLIFT_gareth.ratti.rvt

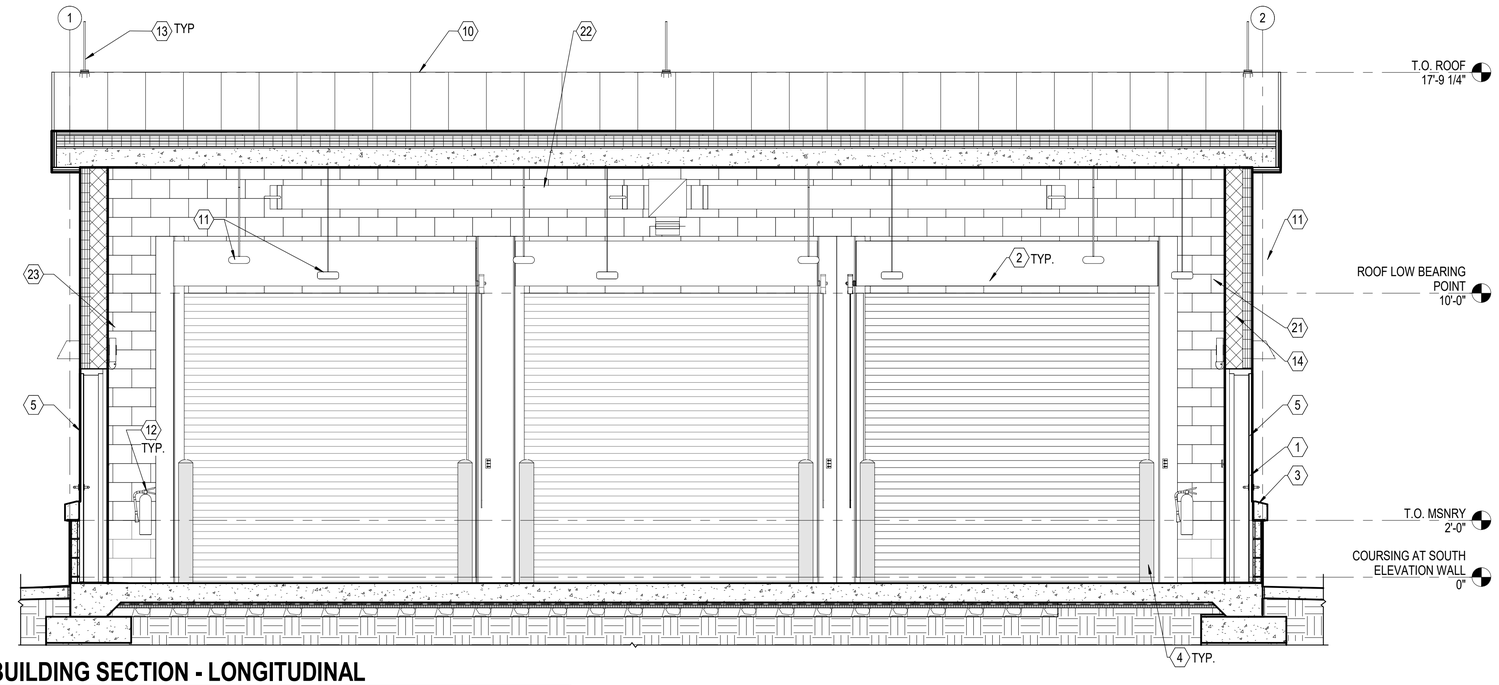

C1 BUILDING SECTION - LONGITUDINAL

SCALE: 3/8" = 1'-0" (A-101B)

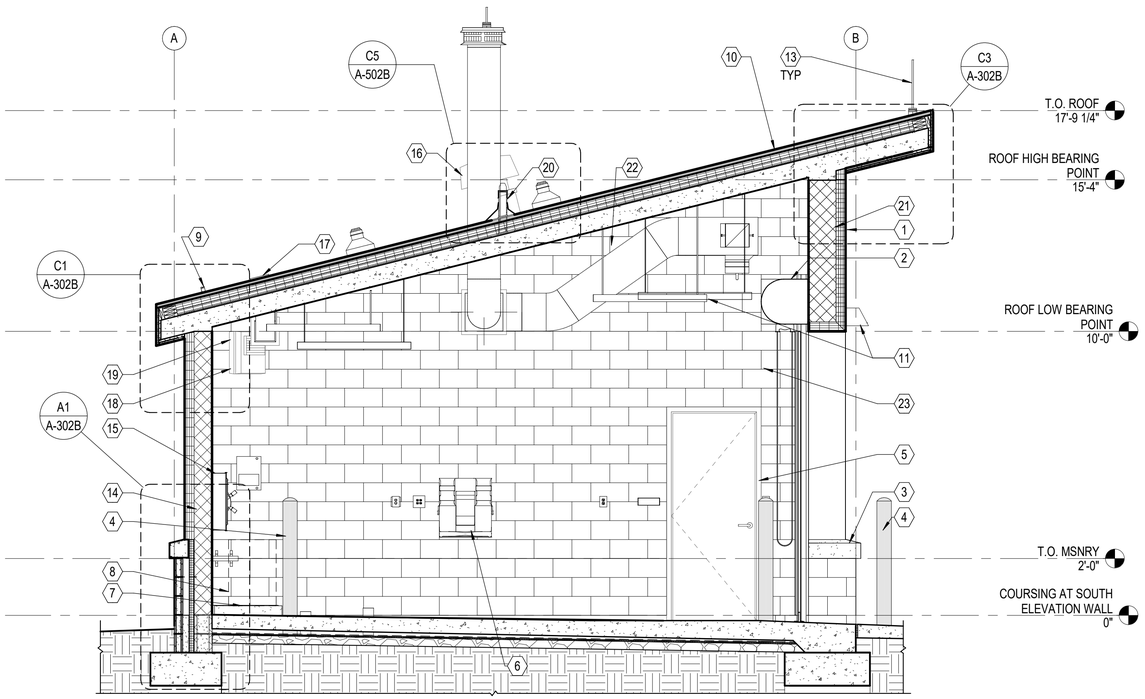

A1 BUILDING SECTION - TRANSVERSE

SCALE: 3/8" = 1'-0" (A-101B)

GENERAL NOTES

A. FOR STRUCTURAL FRAMING OF WALLS AND ROOF, SEE STRUCTURAL DRAWINGS

KEYNOTES

#	
1	PREFINISHED INSULATED METAL WALL PANEL SYSTEM
2	PREFINISHED METAL OVERHEAD COILING DOOR
3	PRE CAST WATER TABLE END, BEYOND
4	CONCRETE FILLED STEEL BOLLARD
5	HOLLOW METAL DOOR AND FRAME
6	PORTABLE EYEWASH STATION
7	CONCRETE PAD
8	PROVIDE 4" REINFORCED CONCRETE EQUIPMENT PAD. INSTALL OWNER FURNISHED BATTERY CHARGER, CENTERED ON PAD BOTH DIRECTIONS
9	PROVIDE TWO RAIL SNOW GUARD ASSEMBLY WITH CLAMP TYPE CONNECTORS AT STANDING SEAMS
10	ROOFING: 2" STANDING SEAM, HOT DIPPED STEEL WITH HIGH-PERFORMANCE ROOFING, STAINLESS STEEL CLIPS AND FASTENERS
11	LIGHT FIXTURE - SEE ELECTRICAL
12	FIRE EXTINGUISHER, MOUNTED TO BRACKET, 3'-0" AFF. TO CARRYING HANDLE. MOUNTING BRACKETS, FIRE EXTINGUISHERS AND OPERATING INSTRUCTIONS TO BE PROVIDED AND INSTALLED BY OWNER
13	LIGHTNING PROTECTION AIR TERMINAL - SEE ELECTRICAL
14	8" REINFORCED CMU - SEE STRUCTURAL
15	DISCONNECT SWITCH - SEE ELECTRICAL
16	GRAVITY VENTILATOR - SEE MECHANICAL
17	AIR INTAKE - SEE MECHANICAL
18	EXHAUST AIR DUCT
19	UNIT HEATER - SEE MECHANICAL
20	EXHAUST STACK ROOF BRACE
21	12" REINFORCED CMU, SEE STRUCTURAL
22	DUCTWORK - SEE MECHANICAL
23	HYDROGEN SENSOR - SEE MECHANICAL

GRAPHIC SCALE(S)

3/8" = 1' - 0" 0 1' 2' 3' 4' 5' 10'

SYM	DESCRIPTION	DATE	APPR

NAVFAC

SEAL

A/E INFO

APPROVED
Vincent J. Greco, P.E.

FOR COMMANDER NAVFAC

ACTIVITY
Approved by LCDR VINCE DEL GRECO, ROICC with PWD YORKTOWN, via Email,

SATISFACTORY TO DATE 03/26/2026

DES	GJR	DRW	GJR	CHK	JEL
PM/DM	MME/WJW				
BRANCH MANAGER	DJD				
CHIEF ENG/ARCH	JWJ				
FIRE PROTECTION	HPN				

DEPARTMENT OF THE NAVY
NAVAL FACILITIES ENGINEERING SYSTEMS COMMAND
MIDLANT DC CORE

NAVAL FACILITIES ENGINEERING SYSTEMS COMMAND - MID-ATLANTIC
NAVAL STATION - NORFOLK, VA

NAVAL WEAPONS STATION YORKTOWN, VIRGINIA
P171 WEAPON MAGAZINES
FORKLIFT CHARGING STATION

BUILDING SECTIONS

SCALE: AS NOTED
EPROJECT NO.: 1737010
CONSTR. CONTR. NO.

NAVFAC DRAWING NO.
12942166

SHEET 480 OF 499

A-301B

DRAWFORM REVISION: 25 AUGUST 2020

4/20/2026 7:51:15 AM A-301B
C:\Revit Local Files\P171-1737010-A-R21-FORKLIFT_gareth.ratti.rvt

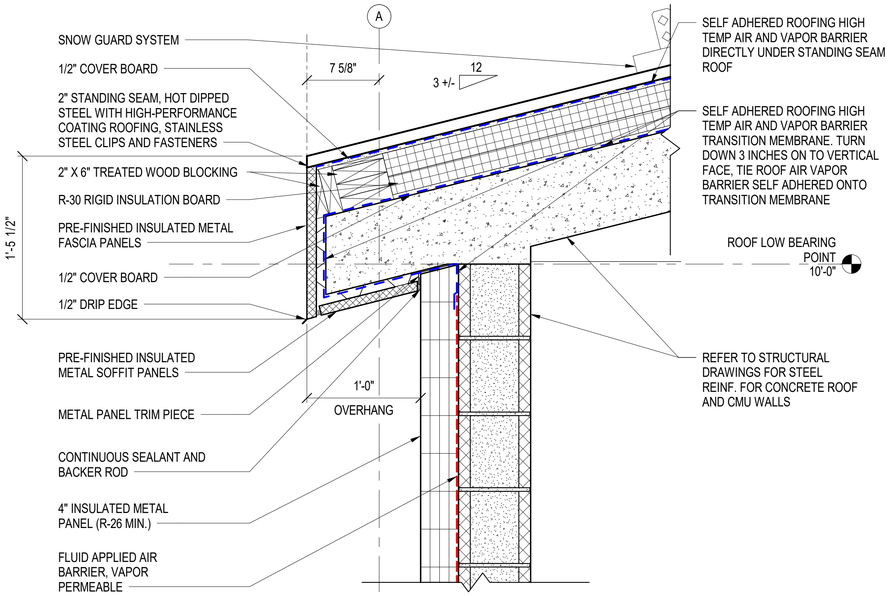

C1 WALL SECTION DETAIL- BACK WALL EAVE

SCALE: 1 1/2" = 1'-0" (A-101B)

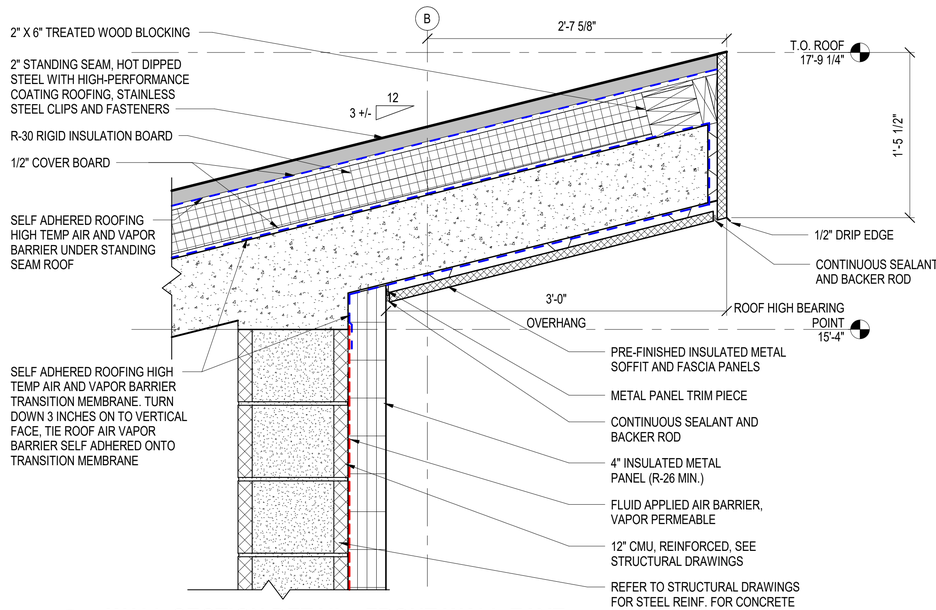

C3 WALL SECTION DETAIL - FRONT WALL EAVE

SCALE: 1 1/2" = 1'-0" (A-301B)

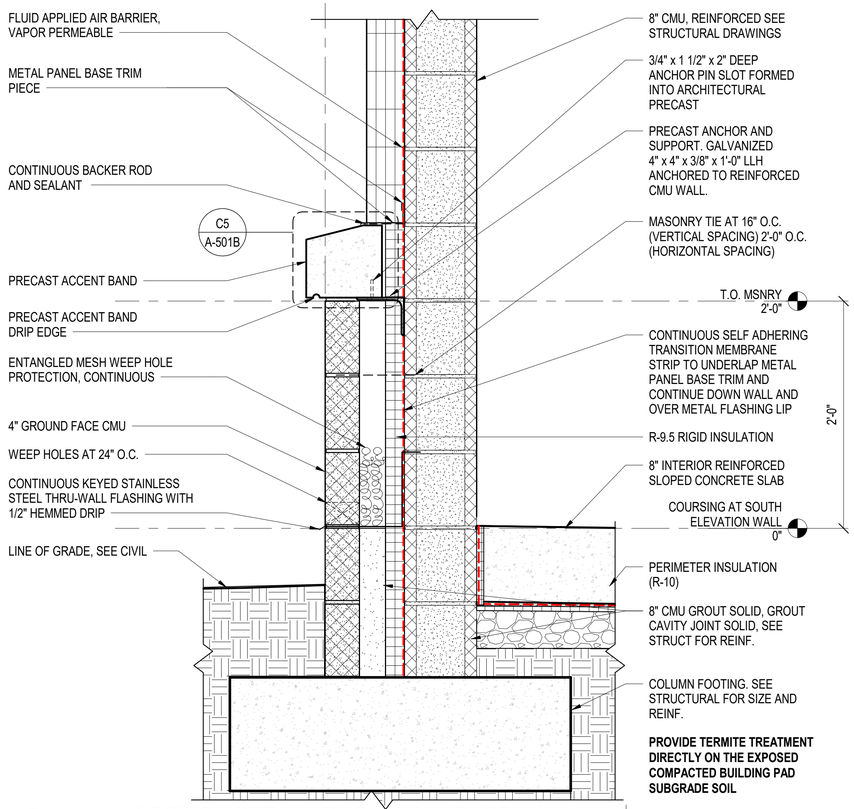

A1 WALL SECTION DETAIL- BACK WALL BASE

SCALE: 1 1/2" = 1'-0" (A-301B)

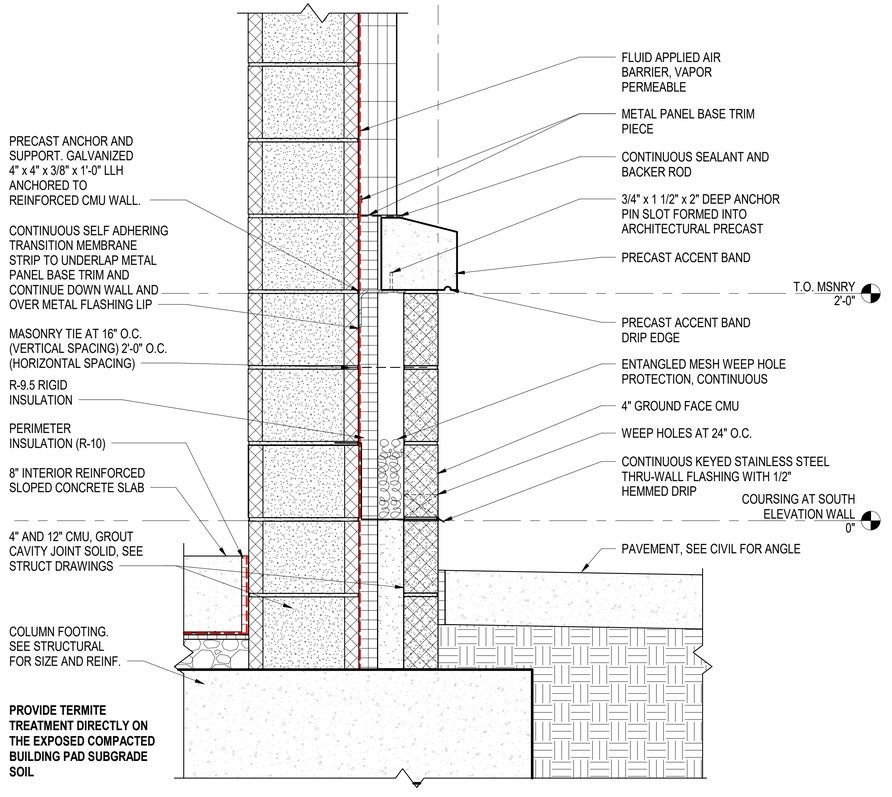

A3 WALL SECTION DETAIL - FRONT WALL BASE

SCALE: 1 1/2" = 1'-0" (A-101B)

GRAPHIC SCALE(S)

1 1/2" = 1' - 0" 0 3" 6" 9" 1' 2'

SYM	DESCRIPTION	DATE	APPR

NAVFAC

SEAL

A/E INFO

APPROVED
Digitally signed by R.E.
FOR COMMANDER NAVFAC

ACTIVITY: Approved by LCDR VINCE DEL GRECO, ROICC with PWD YORKTOWN, via Email.
SATISFACTORY TO DATE: 03/26/2026

DES	GJR	DRW	GJR	CHK	JEL
PM/DM	MME/WJW				
BRANCH MANAGER	DJD				
CHIEF ENG/ARCH	JWJ				
FIRE PROTECTION	HPN				

DEPARTMENT OF THE NAVY
NAVAL FACILITIES ENGINEERING SYSTEMS COMMAND
MIDLANT DC CORE
NAVAL FACILITIES ENGINEERING SYSTEMS COMMAND - MID-ATLANTIC
NAVAL STATION - NORFOLK, VA
YORKTOWN, VIRGINIA
NAVAL WEAPONS STATION
P171 WEAPON MAGAZINES
FORKLIFT CHARGING STATION
WALL SECTIONS

SCALE: AS NOTED
EPROJECT NO.: 1737010
CONSTR. CONTR. NO.
NAVFAC DRAWING NO. 12942167
SHEET 481 OF 499

A-302B

DRAWFORM REVISION: 25 AUGUST 2020

4/1/2026 12:43:02 PM A-302B
C:\Revit Local Files\P171-173701O-A-R21-FORKLIFT_gareth.ratti.rvt

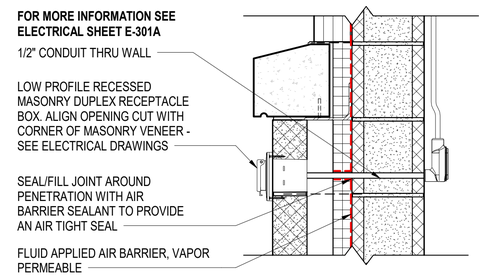

D1 EXTERIOR RECEPTACLE DETAIL

SCALE: 1 1/2" = 1'-0" (A-601B)

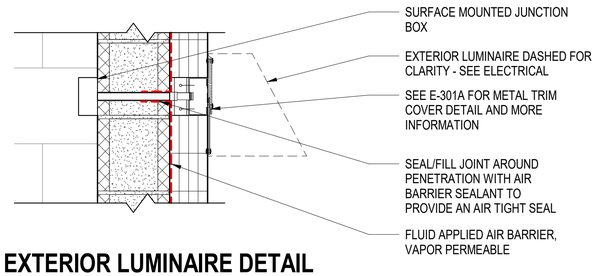

D2 EXTERIOR LUMINAIRE DETAIL

SCALE: 1 1/2" = 1'-0"

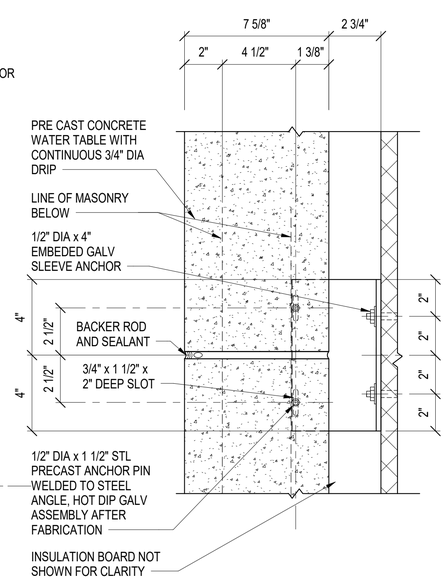

C4 PRECAST SUPPORT ANCHOR

SCALE: 3" = 1'-0" (A-501B)

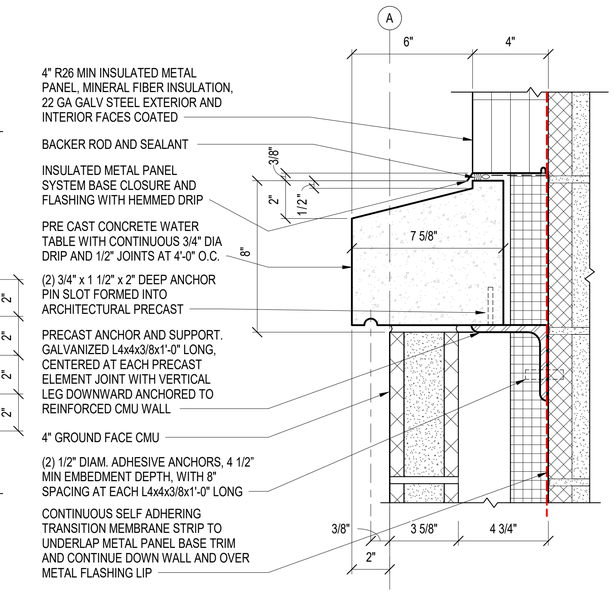

C5 ARCHITECTURAL PRECAST BAND SECTION

SCALE: 3" = 1'-0" (A-302B)

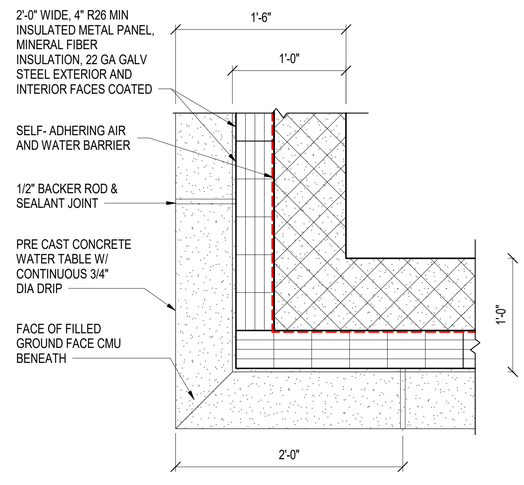

B1 CORNER DETAIL AT 4'-0 AFF

SCALE: 1 1/2" = 1'-0" (A-101B)

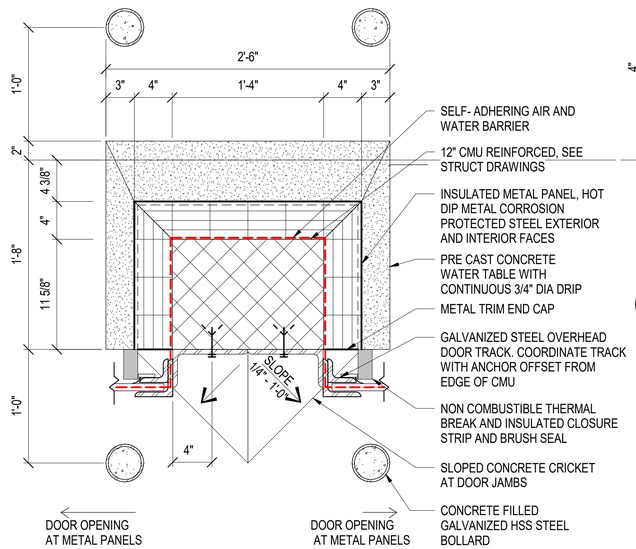

B2 OVERHEAD DOOR JAMB DETAIL

SCALE: 1 1/2" = 1'-0" (A-101B)

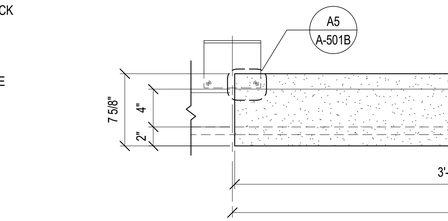

B4 PRECAST PANEL PLAN DETAIL

SCALE: 1 1/2" = 1'-0"

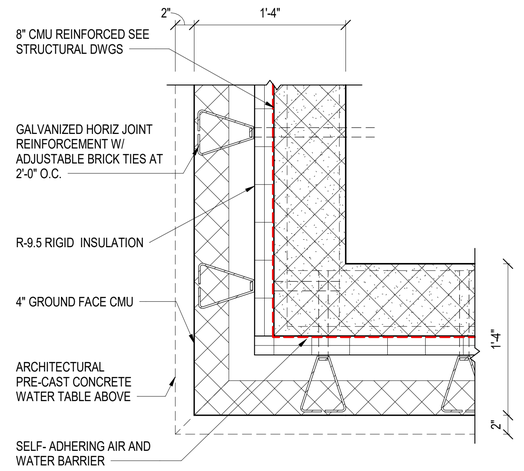

A1 PLAN DETAIL - CORNER AT 1'-0" AFF

SCALE: 1 1/2" = 1'-0" (A-101B)

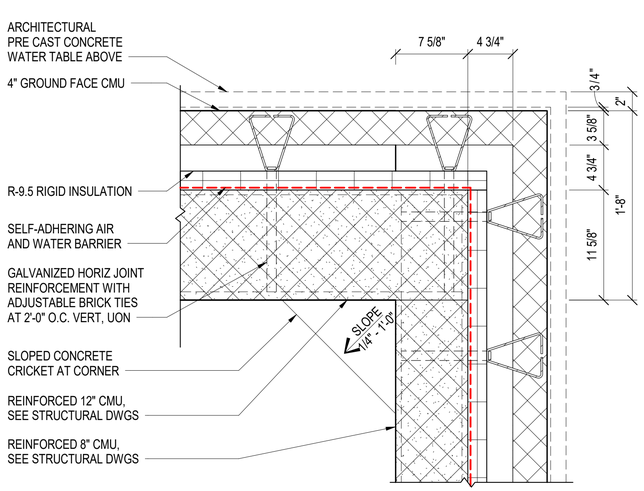

A2 CORNER DETAIL AT 1'-0" AFF

SCALE: 1 1/2" = 1'-0" (A-101B)

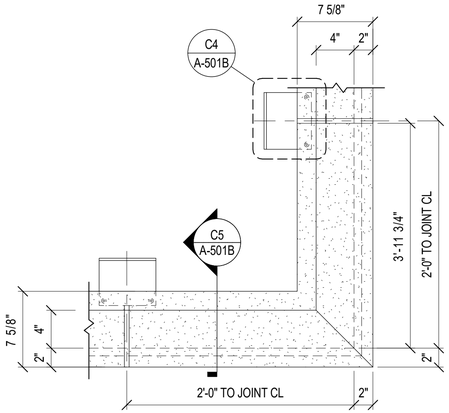

NOTE - PRE CAST CONCRETE WATER TABLE ONLY SHOWN FOR CLARITY SEE B4/A-501A FOR TO SCALE PRECAST PANEL LENGTH, TYP.

A4 PRECAST CORNER PLAN DETAIL

SCALE: 1 1/2" = 1'-0"

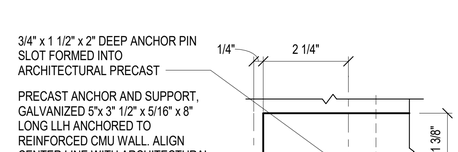

A5 PRECAST CORNER DETAIL

SCALE: 6" = 1'-0" (A-501B)

GRAPHIC SCALE(S)

3" = 1' - 0" 0 3" 6" 1'

6" = 1' - 0" 0 1" 2" 4" 6"

1 1/2" = 1' - 0" 0 3" 6" 9" 1' 2'

SYM	DESCRIPTION	DATE	APPR

SEAL

A/E INFO

APPROVED

FOR COMMANDER NAVFAC

ACTIVITY
Approved by LCDR VINCE DEL GRECO, ROICC with PWD YORKTOWN, via Email,

SATISFACTORY TO DATE 03/26/2026

DES	GJR	DRW	GJR	CHK	JEL

PM/DM	MME/WJW
BRANCH MANAGER	DJD
CHIEF ENG/ARCH	JWJ
FIRE PROTECTION	HPN

DEPARTMENT OF THE NAVY
NAVAL FACILITIES ENGINEERING SYSTEMS COMMAND
MIDLANT DC CORE
NAVAL FACILITIES ENGINEERING SYSTEMS COMMAND - MID-ATLANTIC
NAVAL STATION - NORFOLK, VA
NAVAL WEAPONS STATION YORKTOWN, VIRGINIA
P171 WEAPON MAGAZINES
FORKLIFT CHARGING STATION
EXTERIOR DETAILS

SCALE: AS NOTED
EPROJECT NO.: 1737010
CONSTR. CONTR. NO.
NAVFAC DRAWING NO. 12942168
SHEET 482 OF 499

A-501B

DRAWFORM REVISION: 25 AUGUST 2020

4/1/2026 12:43:04 PM A-501B
C:\Revit Local Files\P171-1737010-A-R21-FORKLIFT_gareth.ratti.rvt

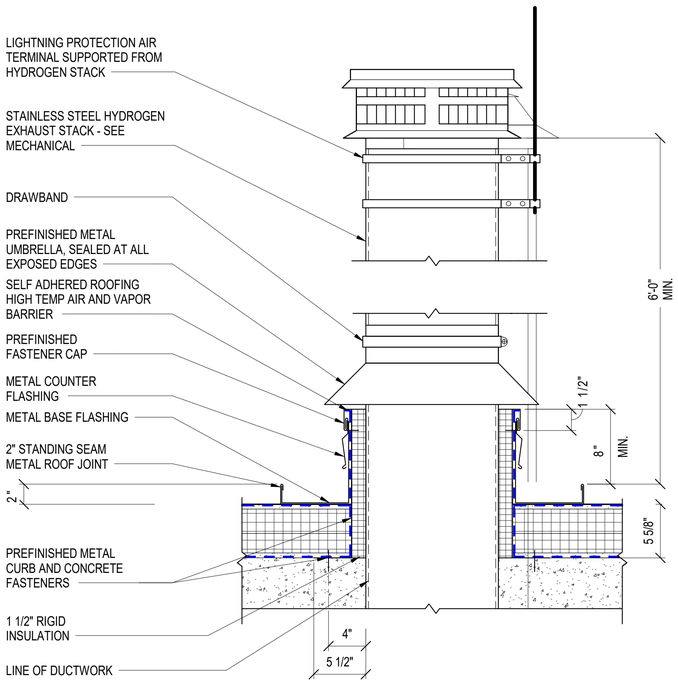

C1 HYDROGEN EXHAUST STACK DETAIL

SCALE: 1 1/2" = 1'-0" (A-103B)

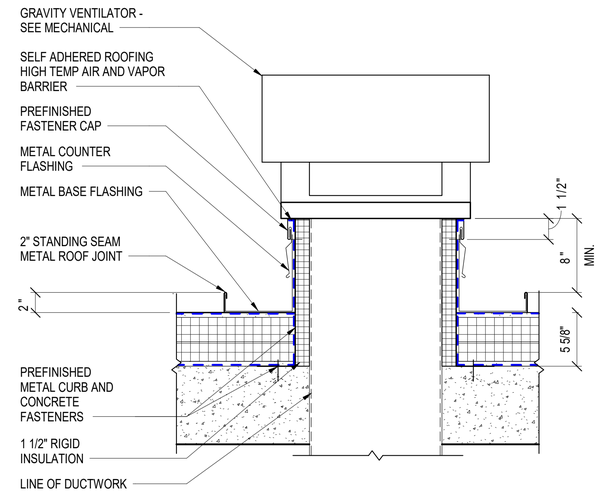

D3 GRAVITY VENT DETAIL

SCALE: 1 1/2" = 1'-0" (A-103B)

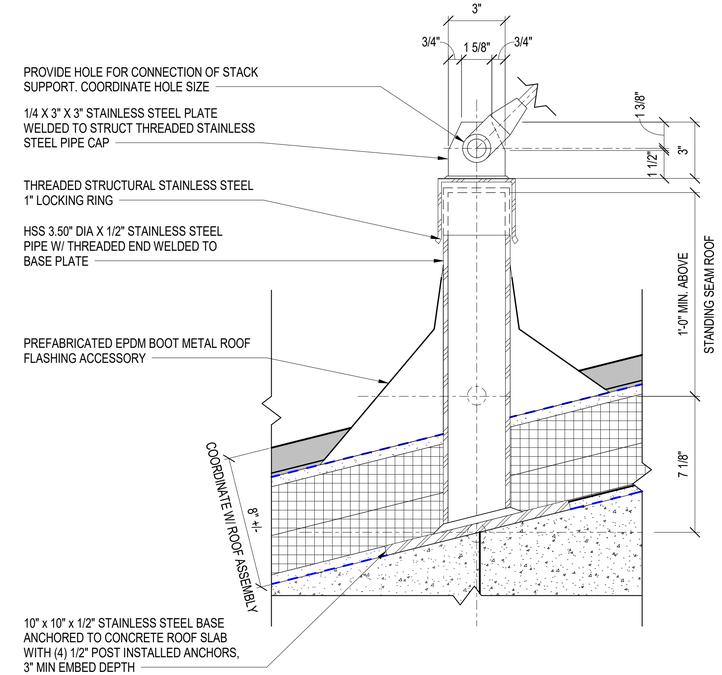

C5 HYDROGEN EXHAUST STACK DIAGONAL BRACE CONNECTION

SCALE: 3" = 1'-0" (A-301B)

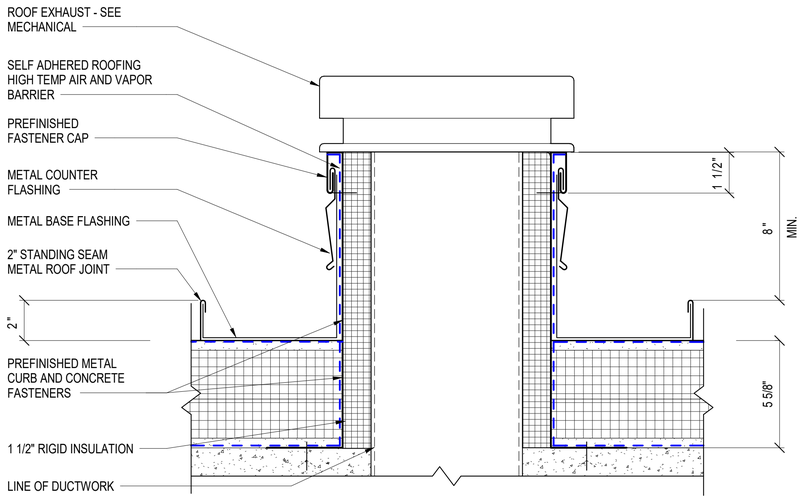

A1 ROOF EXHAUST DETAIL

SCALE: 3" = 1'-0" (A-103B)

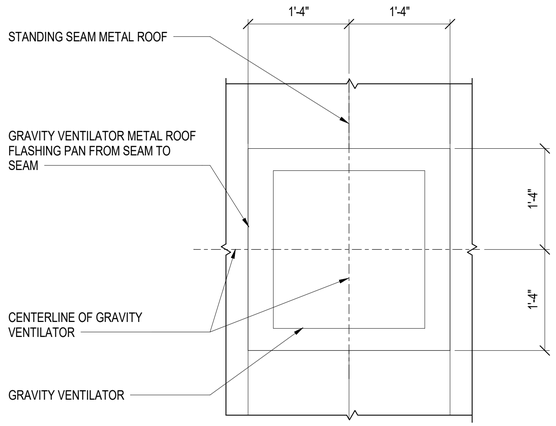

B3 GRAVITY VENTILATOR FLASHING PLAN

SCALE: 1" = 1'-0" (A-103B)

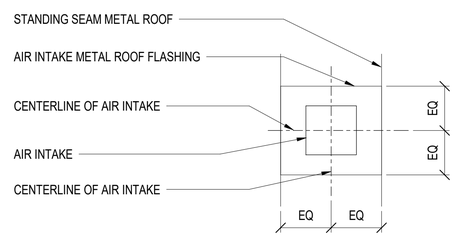

A3 AIR INTAKE FLASHING PLAN

SCALE: 1" = 1'-0" (A-103B)

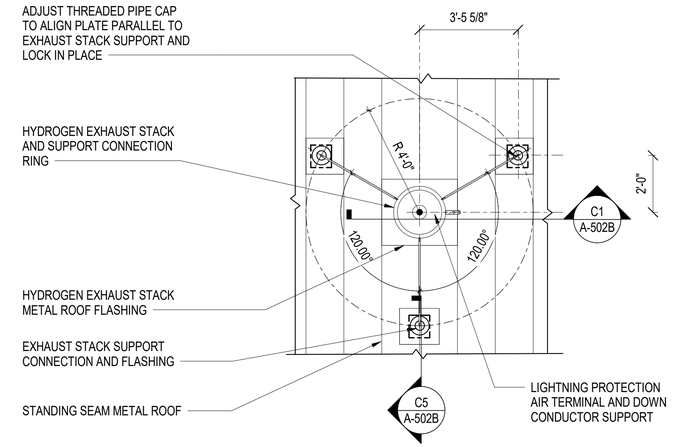

A5 HYDROGEN EXHAUST STACK FLASHING & SUPPORT PLAN

SCALE: 3/8" = 1'-0" (A-103B)

GRAPHIC SCALE(S)

1 1/2" = 1' - 0" 0 3" 6" 9" 1' 2'

3/8" = 1' - 0" 0 1' 2' 3' 4' 5' 10'

1" = 1' - 0" 0 6" 1' 2' 3'

3" = 1' - 0" 0 3" 6" 1'

SYM	DESCRIPTION	DATE	APPR

NAVFAC

SEAL

A/E INFO

APPROVED

FOR COMMANDER NAVFAC:

ACTIVITY
Approved by LCDR VINCE DEL GRECO, ROICC with PWD YORKTOWN, via Email,

SATISFACTORY TO DATE 03/26/2026

DES	GJR	DRW	GJR	CHK	JEL

PM/DM	MME/WJW
BRANCH MANAGER	DJD
CHIEF ENG/ARCH	JWJ
FIRE PROTECTION	HPN

DEPARTMENT OF THE NAVY
NAVAL FACILITIES ENGINEERING SYSTEMS COMMAND
MID-ANT DC CORE

NAVAL FACILITIES ENGINEERING SYSTEMS COMMAND - MID-ATLANTIC
NAVAL STATION - NORFOLK, VA

NAVAL WEAPONS STATION YORKTOWN, VIRGINIA
P171 WEAPON MAGAZINES
FORKLIFT CHARGING STATION

ROOF DETAILS

SCALE:	AS NOTED
EPROJECT NO.:	1737010
CONSTR. CONTR. NO.	
NAVFAC DRAWING NO.	12942169
SHEET	483 OF 499

A-502B

DRAWFORM REVISION: 25 AUGUST 2020

4/1/2026 12:43:06 PM A-502B
C:\Revit Local Files\P171-1737010-A-R21-FORKLIFT_gareth.ratti.rvt

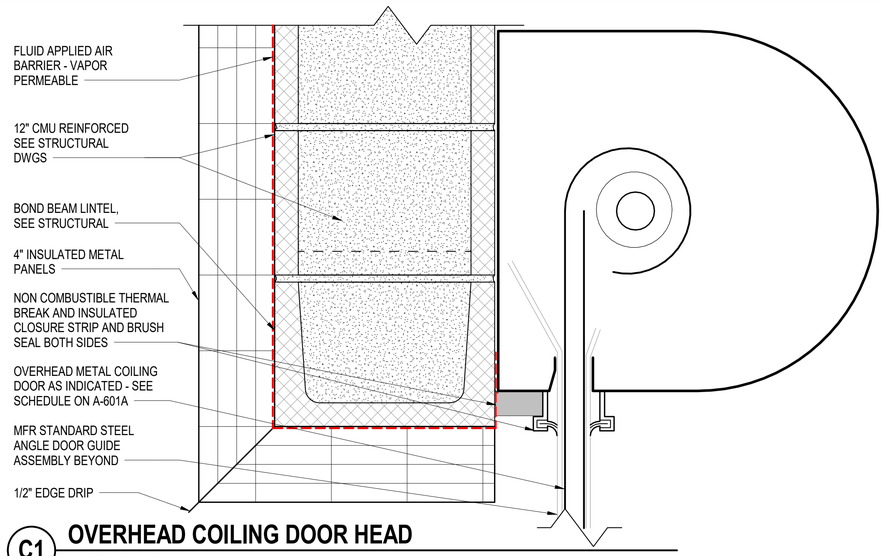

C1 OVERHEAD COILING DOOR HEAD

SCALE: 3" = 1'-0"

DOOR AND FRAME SCHEDULE

DOOR NO.	DOOR TYPE	DOOR SIZE WIDTH	DOOR SIZE HEIGHT	DOOR SIZE THICKNESS	DOOR MATERIAL	FRAME TYPE	FRAME MATERIAL	FRAME DETAILS HEAD	FRAME DETAILS JAMB	FRAME DETAILS SILL	FIRE RATING	HARDWARE SET NO.	REMARKS
COURSING AT SOUTH ELEVATION WALL													
101A	D1	3'-0"	7'-4"	1 3/4"	HM	F1	HM	B3	B2		--	1	
101B	D1	3'-0"	7'-4"	1 3/4"	HM	F1	HM	B3	B2		--	1	
101C	D2	10'-0"	10'-0"	1"	SS	--	STL	C1	B1	A1	--	2	
101D	D2	10'-0"	10'-0"	1"	SS	--	STL	C1	B1	A1	--	2	
101E	D2	10'-0"	10'-0"	1"	SS	--	STL	C1	B1	A1	--	2	
101I	D2	10'-0"	10'-0"	1"	SS	--	STL	C1	B1	A1	--	2	
101J	D2	10'-0"	10'-0"	1"	SS	--	STL	C1	B1	A1	--	2	
101K	D2	10'-0"	10'-0"	1"	SS	--	STL	C1	B1	A1	--	2	

DOOR AND FRAME SCHEDULE REMARKS

HM = HOLLOW METAL

SS = STAINLESS STEEL

STL = STRUCTURAL STEEL

GENERAL DOOR NOTES:

A. HOLLOW METAL FRAMES INCLUDE HOLLOW METAL CASED OPENINGS, WINDOW, DOOR FRAMES.

B. FIELD VERIFY ALL OPENING DIMENSIONS FOR FRAMES PRIOR TO FABRICATION.

C. PROVIDE JAMB ANCHORS AT ALL DOORS. PROVIDE A MINIMUM OF ONE ANCHOR FOR EACH 2'-0" OF FRAME OPENING HEIGHT - MINIMUM (3) PER JAMB.

D. PROVIDE A CONTINUOUS BEAD OF SEALANT AT BOTH SIDES OF ALL FRAMES WHERE FRAME ABUTS THE PARTITION.

E. AT STANDARD MASONRY WALLS, FILL DOOR FRAME SOLID WITH MORTAR, UNLESS OTHERWISE NOTED.

F. REFERENCE STRUCTURAL DRAWINGS FOR CMU BOND BEAM LINTELS.

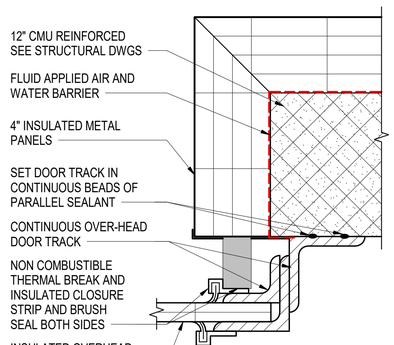

B1 OVERHEAD COILING DOOR JAMB

SCALE: 3" = 1'-0"

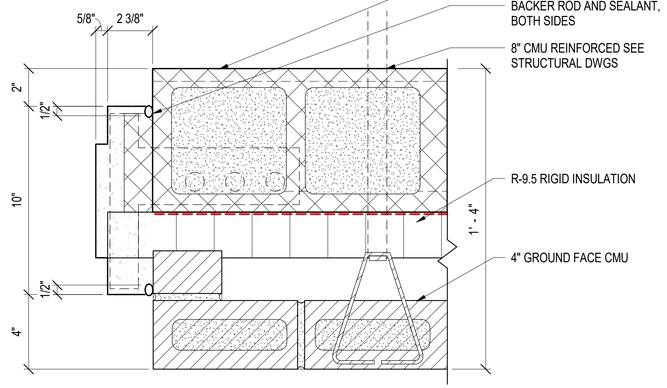

B2 MASONRY CAVITY WALL JAMB DETAIL

SCALE: 3" = 1'-0"

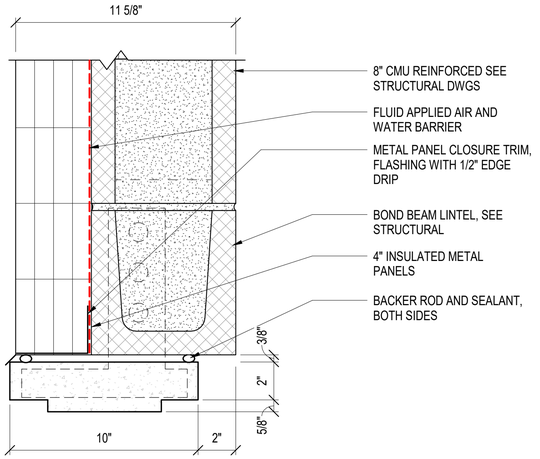

B3 METAL PANEL AND MASONRY HM HEAD

SCALE: 3" = 1'-0"

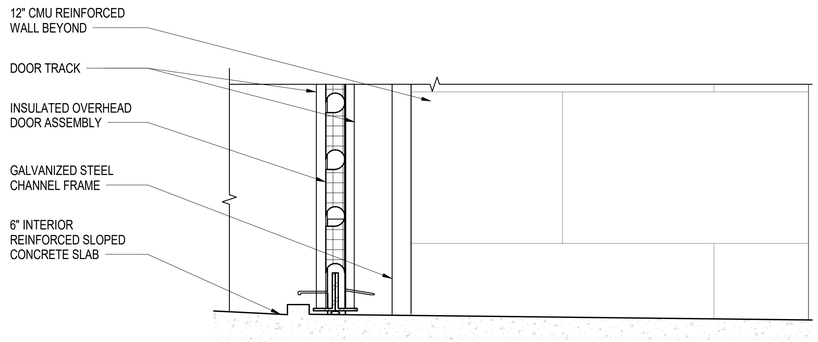

A1 OVERHEAD COILING DOOR SILL

SCALE: 3" = 1'-0"

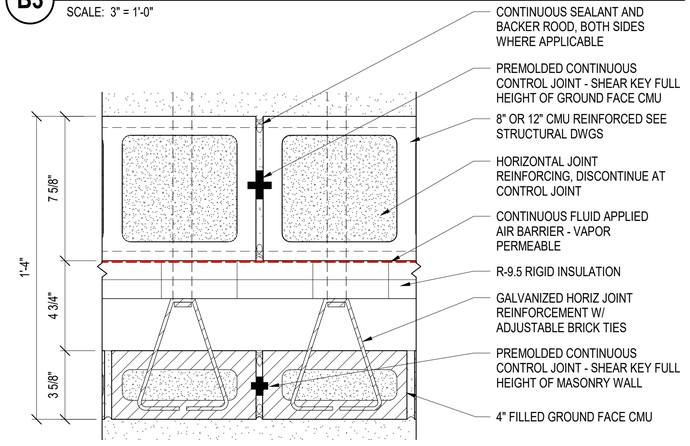

A3 MASONRY CONTROL JOINT (CJ) DETAIL

SCALE: 3" = 1'-0"

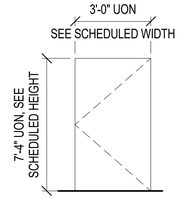

D1

SINGLE FLUSH DOOR PANEL

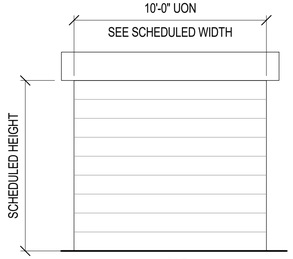

D2

OVERHEAD COILING DOOR

DOOR TYPES

SCALE: 1/4" = 1'-0"

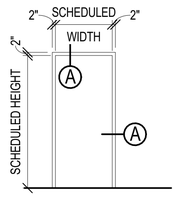

F1

HM - DBL RABBET W/ 2" HEAD

FRAME TYPES

SCALE: 1/4" = 1'-0"

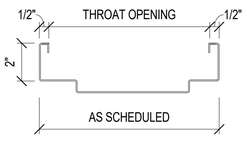

A

DOUBLE RABBET W/ 2" FACE

HOLLOW METAL FRAME PROFILE

SCALE: 3" = 1'-0"

GRAPHIC SCALE(S)

3" = 1' - 0" 0 3" 6" 1'

1/4" = 1' - 0" 0 1' 5' 10' 15'

SYM	DESCRIPTION	DATE	APPR

SEAL

A/E INFO

APPROVED

FOR COMMANDER NAVFAC

ACTIVITY: Approved by LCDR VINCE DEL GRECO, RO/CC with PWD YORKTOWN, via Email.

SATISFACTORY TO DATE: 03/26/2026

DES	GJR	DRW	GJR	CHK	JEL

PM/DM	MME/WJW
BRANCH MANAGER	DJD
CHIEF ENG/ARCH	JWJ
FIRE PROTECTION	HPN

DEPARTMENT OF THE NAVY
NAVAL FACILITIES ENGINEERING SYSTEMS COMMAND
MIDLANT DC CORE

NAVAL FACILITIES ENGINEERING SYSTEMS COMMAND - MID-ATLANTIC
NAVAL STATION - NORFOLK, VA

NAVAL WEAPONS STATION YORKTOWN, VIRGINIA
P171 WEAPON MAGAZINES
FORKLIFT CHARGING STATION

DOOR AND FRAME SCHEDULE TYPES AND DETAILS

SCALE: AS NOTED

EPROJECT NO.: 1737010

CONSTR. CONTR. NO.

NAVFAC DRAWING NO.: 12942170

SHEET 484 OF 499

A-601B

DRAWFORM REVISION: 25 AUGUST 2020

4/1/2026 12:43:08 PM A-601B
C:\Revit Local Files\P171-1737010-A-R21-FORKLIFT_gareth.ratti.rvt

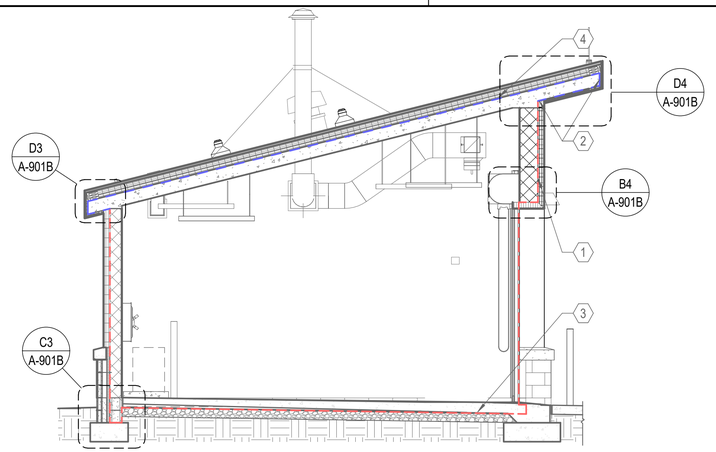

D1 BUILDING AIR BARRIER SECTION - FORKLIFT CHARGING

SCALE: 1/4" = 1'-0" (A-901B)

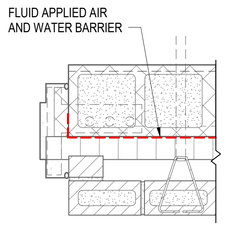

D2 AIR BARRIER DETAIL - MASONRY CAVITY WALL JAMB

SCALE: 1 1/2" = 1'-0" (A-901B)

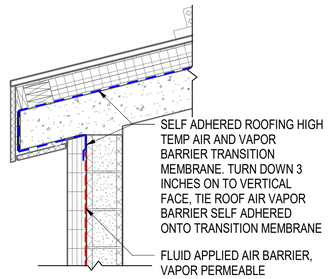

D3 AIR BARRIER DETAIL- BACK WALL EAVE

SCALE: 3/4" = 1'-0" (A-901B)

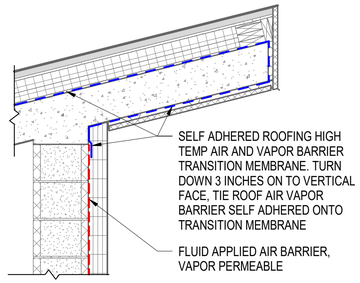

D4 AIR BARRIER DETAIL - FRONT WALL EAVE

SCALE: 3/4" = 1'-0" (A-901B)

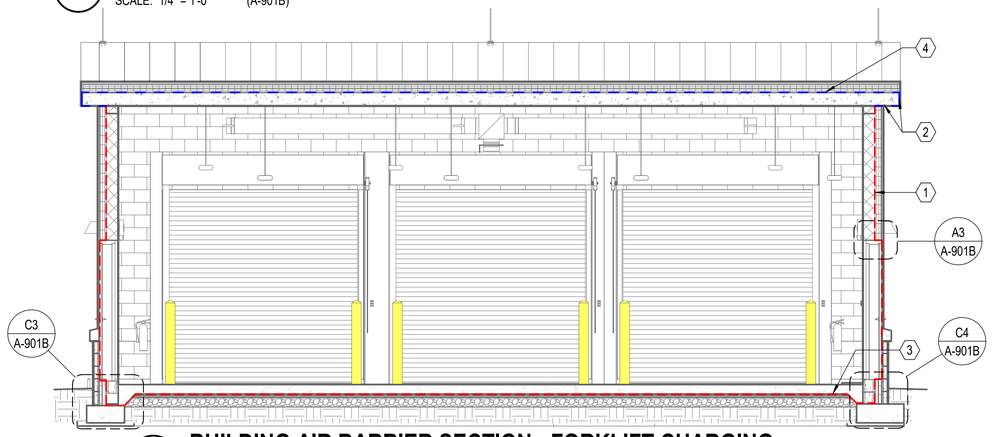

B1 BUILDING AIR BARRIER SECTION - FORKLIFT CHARGING

SCALE: 1/4" = 1'-0" (A-901B)

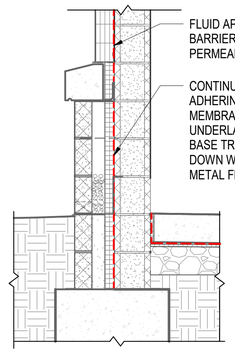

C3 AIR BARRIER DETAIL- BACK WALL BASE

SCALE: 3/4" = 1'-0" (A-901B)

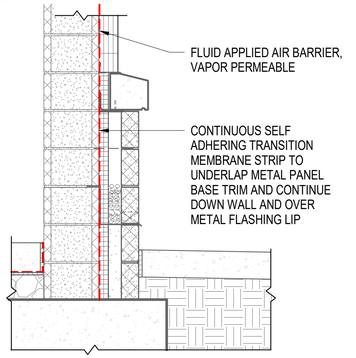

C4 AIR BARRIER DETAIL - FRONT WALL BASE

SCALE: 3/4" = 1'-0" (A-901B)

A1 FLOOR AIR BARRIER PLAN - FORKLIFT CHARGING

SCALE: NOT TO SCALE

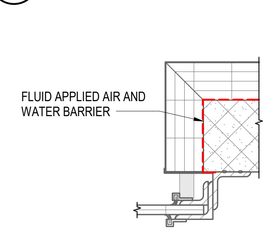

B3 AIR BARRIER DETAIL - OVERHEAD COILING DOOR JAMB

SCALE: 1 1/2" = 1'-0" (A-901B)

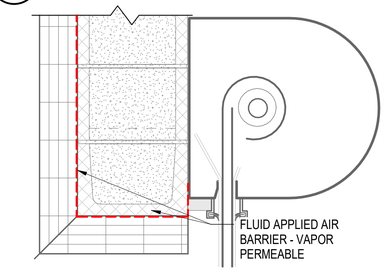

B4 AIR BARRIER DETAIL - OVERHEAD COILING DOOR HEAD

SCALE: 1 1/2" = 1'-0" (A-901B)

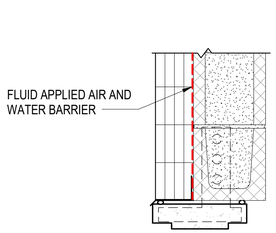

A3 AIR BARRIER DETAIL - METAL PANEL AND MASONRY HM HEAD

SCALE: 1 1/2" = 1'-0" (A-901B)

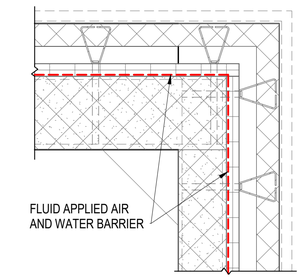

A4 AIR BARRIER DETAIL - CORNER DETAIL AT 1'-0" AFF

SCALE: 1" = 1'-0" (A-901B)

GENERAL NOTES

A. ALL AIR BARRIER PRODUCTS AND ACCESSORIES SHALL BE INSTALLED IN ACCORDANCE WITH MANUFACTURER'S RECOMMENDED INSTALLATION REQUIREMENTS AND SHALL BE COMPATIBLE WITH FLASHING AND SEALANTS. ALL SEALANTS, COMPONENTS, CLADDING MATERIALS, PENETRATIONS, AND TRANSITION MATERIALS THAT TIE DIRECTLY INTO THE AIR BARRIER ASSEMBLY SHALL BE CHECKED FOR COMPATIBILITY WITH THE PRIMARY MANUFACTURER OF AIR BARRIER ASSEMBLY. LETTERS OF COMPLIANCE SHALL BE SUBMITTED

B. SEE SHEET AE201B FOR ELEVATION NOTES

(#) AIR BARRIER NOTES

1 FLUID APPLIED AIR BARRIER, VAPOR PERMEABLE

2 SELF ADHERED ROOFING HIGH TEMP AIR AND VAPOR BARRIER ATJOINTS, SEAMS, PENETRATIONS AND CORNERS

3 VAPOR BARRIER. SEAL ALL JOINTS AND SEAMS. SEAL ALL PENETRATIONS AT REINFORCED CONCRETE SLAB PENETRATIONS

4 SELF ADHERED ROOFING HIGH TEMP AIR AND VAPOR BARRIER AT ROOF ASSEMBLY

AIR BARRIER ENCLOSURE SURFACE AREA OF EXTERIOR ENVELOPE

EXTERIOR WALLS:
(INCLUDES DOORS)

TOTAL EXTERIOR WALL SURFACE AIR BARRIER SYSTEM: 1,450 SF

TOTAL ROOF SURFACE AREA AIR BARRIER SYSTEM: 1,050 SF

FLOOR:
CONCRETE FLOOR SLAB 700 SF

TOTAL ENCLOSURE SURFACE AREA: 3,200 SF

THE ENCLOSURE SURFACE AREAS LISTED ABOVE ARE APPROXIMATES FOR THE FLOOR, WALLS AND ROOF. THE SURFACE AREA DOES NOT INCLUDE PENETRATIONS AND UNINTENTIONAL HOLES WITHIN THE AIR BARRIER. THE ENCLOSURE SURFACE AREAS FOR "INTENTIONAL" HOLES IN THE BUILDING ENCLOSURE ARE APPROXIMATES AND DO NOT TAKE INTO ACCOUNT EVERY "INTENTIONAL" HOLE(S). THESE "INTENTIONAL" HOLES INCLUDE AIR INTAKE, EXHAUST LOUVERS, MAKE-UP AIR INTAKES, AND OTHER INTENTIONAL HOLE THAT ARE NOT INCLUDED IN THE AIR BARRIER DESIGN OR CONSTRUCTION. EXTERIOR DOORS (FENESTRATION) ARE NOT INTENTIONAL OPENINGS. FENESTRATION IS INCLUDED IN THE AIR BARRIER TEST BOUNDARY

GRAPHIC SCALE(S)

1 1/2" = 1' - 0" 0 3" 6" 9" 1' 2'

1/8" = 1' - 0" 0 5' 10' 15' 30'

1/4" = 1' - 0" 0 1' 5' 10' 15'

3/4" = 1' - 0" 0 6" 1' 2' 3' 4' 5'

SYM	DESCRIPTION	DATE	APPR

SEAL

A/E INFO

APPROVED
FOR COMMANDER NAVFAC
ACTIVITY
Approved by LCDR VINCE DEL GRECO, RO/CO with PWD YORKTOWN, via Email.
SATISFACTORY TO DATE 03/26/2026
DES GJR DRW GJR CHK JEL
PM/DM MME/WJW
BRANCH MANAGER DJD
CHIEF ENG/ARCH JWJ
FIRE PROTECTION HPN

DEPARTMENT OF THE NAVY
NAVAL FACILITIES ENGINEERING SYSTEMS COMMAND
MID-ATLANTIC DC CORE
NAVAL FACILITIES ENGINEERING SYSTEMS COMMAND - MID-ATLANTIC
NAVAL STATION - NORFOLK, VA
NAVAL WEAPONS STATION YORKTOWN, VIRGINIA
P171 WEAPON MAGAZINES
FORKLIFT CHARGING STATION
AIR BARRIER PLAN, SECTIONS AND DETAILS

SCALE: AS NOTED
EPROJECT NO.: 1737010
CONSTR. CONTR. NO.
NAVFAC DRAWING NO. 12942171
SHEET 485 OF 499

A-901B

DRAWFORM REVISION: 25 AUGUST 2020

4/1/2026 12:43:10 PM A-901B
C:\Revit Local Files\P171-1737010-A-R21-FORKLIFT_gareth.ratti.rvt

MECHANICAL LEGEND

- THERMOSTAT
- HYDROGEN SENSOR
- AIR TERMINAL TAG WITH AIR FLOW (CFM) — A / 150
- EMERGENCY HVAC SYSTEM SHUTOFF SWITCH — $
- 12"x10" RECTANGULAR DUCT DIMENSIONS (INCHES)
- 12"Ø ROUND DUCT DIMENSION
- FLEXIBLE ROUND DUCT (5'-0" MAX LENGTH)
- DOWNWARD DIRECTION OF SLOPED PIPING
- SUPPLY DUCT, SUPPLY DUCT DOWN/UP
- RETURN DUCT, RETURN DUCT DOWN/UP
- 2-WAY VALVE
- 3-WAY VALVE
- AUTOMATIC BALANCING VALVE
- BALL VALVE
- BUTTERFLY VALVE
- CHECK VALVE
- DRAIN VALVE
- GATE VALVE
- GLOBE VALVE
- MANUAL FLOW CONTROL BALANCING VALVE
- PRESSURE REDUCING VALVE
- RELIEF VALVE
- SOLENOID VALVE
- SQAURE HEAD BALANCING VALVE
- TEMPERATURE PRESSURE RELIEF VALVE
- BACKFLOW PREVENTER
- AUTOMATIC AIR VENT
- ECCENTRIC REDUCER
- FLANGE
- MANUAL AIR VENT
- PIPE CAP
- PIPE DOWN
- PIPE REDUCER
- PIPE UP
- PRESSURE GAUGE WITH SHUTOFF COCK
- STEAM TRAP
- STRAINER WITH BLOWDOWN VALVE
- THERMOMETER
- UNION
- VACUUM BREAKER
- WYE STRAINER
- DPS — DIFFERENTIAL PRESSURE SENSOR (DUCTWORK)
- NEW WORK NOTE TAG
- DEMOLITION NOTE TAG
- POINT OF CONNECTION TAG
- POINT OF DISCONNECTION TAG
- * POINT SUPPLIED BY UNIT MANUFACTURER
- AVERAGING TEMPERATURE SENSOR

- VERTICAL (WALL) FIRE DAMPER
- HORIZONTAL (CEILING) FIRE DAMPER
- AD — ACCESS DOOR (AD), ACCESS PANEL (AP)
- VOLUME DAMPER
- EXHAUST AIR (NEG.) DUCT SECTION
- VRF CEILING CASSETTE
- VRF CEILING CASSETTE DUCTED
- VRF DUCTED FAN COIL UNIT
- VENT THRU FLOOR/ ROOF
- RISE IN DUCT (POINT IS HIGH)

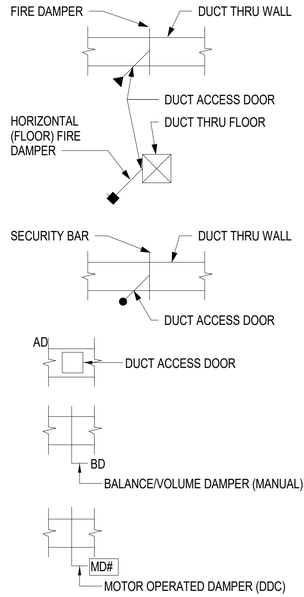

DETAIL/SECTION TITLE	DETAIL CALLOUT SYMBOL	SECTION CUT SYMBOL
SECTION, DETAIL OR ELEVATION IDENTIFICATION MARK SECTION, DETAIL OR ELEVATION TITLE XX / X-XXX PLATE NUMBER WHERE SECTION, DETAIL OR ELEVATION IS TAKEN	DETAIL NUMBER PLATE NUMBER WHERE DETAIL IS DRAWN XX / X-XXX	SECTION LETTER PLATE NUMBER WHERE SECTION IS DRAWN VIEW SECTION XX / X-XXX

MECHANICAL ABBREVIATIONS

A/C	AIR CONDITIONING
AC	ABOVE CEILING
AFD	ACCESS FLOOR DIFFUSER
AFF	ABOVE FINISHED FLOOR
AI	ANALOG INPUT
AMCA	AIR MOVEMENT AND CONTROL ASSOCIATION
AO	ANALOG OUTPUT
AP	ACCESS PANEL
APD	AIR PRESSURE DROP
AS	AIR SEPARATOR
ATFP	ANTI-TERRORISM FORCE PROTECTION
AV	ANALOG VALUE
BD	BALANCING DAMPER
BDD	BACKDRAFT DAMPER (DUCTWORK)
BG	BELOW GROUND
BHP	BRAKE HORSEPOWER
BI	BINARY INPUT
BO	BINARY OUTPUT
BOD	BOTTOM OF DUCT
BTUH	BRITISH THERMAL UNITS PER HOUR
BV	BINARY VALUE
C	COMMON
CD	CEILING DIFFUSER
CER	CEILING EXHAUST REGISTER
CFM	CUBIC FEET PER MINUTE
CLG	CEILING
CND	CONDENSER
COP	COEFFICIENT OF PERFORMANCE
COV	CHANGE OF VALUE
CRG	CEILING RETURN GRILLE
CSD	CEILING SUPPLY DIFFUSER
CTG	CEILING TRANSER GRILLE
CU	CONDENSING UNIT
CUH	CABINET UNIT HEATER
Cv	LOSS COEFFICIENT
DB	DRY BULB
DCW	DOMESTIC COLD WATER (POTABLE)
DDC	DIRECT DIGITAL CONTROL
DEG	DEGREE
DIA	DIAMETER
DW	DOUBLEWALL (DUCTWORK)
DWGS	DRAWINGS
DX	DIRECT EXPANSION
EA	EXHAUST AIR
EAT	ENTERING AIR TEMPERATURE
EC	ELECTRIONICALLY COMMUTATED (MOTOR) / ELECTRIC HEAT COIL
EER	ENERGY EFFICENCY RATIO
EF	EXHAUST FAN
EFF	EFFECTIVENESS / EFFICIENCY
EH	ELECTRIC HEAT
ERV	ENERGY RECOVERY VENTILATOR
ESP	EXTERNAL STATIC PRESSURE
ET	EXPANSION TANK
ETR	EXISTING TO REMAIN
EWT	ENTERING WATER TEMPERATURE
F	FAHRENHEIT
FCU	FAN COIL UNIT
FD	FIRE DAMPER
FT	FEET
FT WG	FEET WATER GAUGE
GH	GRAVITY HOOD
GPM	GALLONS PER MINUTE
HP	HEAT PUMP, HORSEPOWER
HR	HOUR / HEAT RECOVERY
HT	HEIGHT
HW	HOT WATER

MECHANICAL ABBREVIATIONS

HX	HEAT EXCHANGER
IAW	IN ACCORDANCE WITH
IBS	IN BEAM SPACE
IC	IN CEILING
IDU	INDOOR UNIT (VRF)
IN.	INCH
IWG	INCHES WATER GAUGE
KW	KILOWATT
LBS	POUNDS
LV	LOUVER
LWT	LEAVING WATER TEMPERATURE
MAX	MAXIMUM
MBH	1,000 BTUH
MCA	MAXIMUM CIRCUIT AMPS
MD	MOTOR OPERATED DAMPER
MIN	MINIMUM
NC	NORMALLY CLOSED, NOISE CRITERIA
NO	NUMBER, NORMALLY OPEN
NP	NOT PROVIDED
OA	OUTSIDE AIR
OCC	OCCUPANCY
OF	ON FLOOR
OG	ON GRADE
OH	OPPOSITE HAND
OR	ON ROOF
OW	ON WALL
PH	PHASE
PPM	PARTS PER MILLION
PSIG	POUNDS PER SQUARE INCH GAUGE
QTY	QUANTITY
RA	RETURN AIR
RD	ROOF DRAIN
RH	RELATIVE HUMIDITY
RL	REFRIGERANT LIQUID
RS	REFRIGERANT SUCTION
SA	SUPPLY AIR
SAT	SUPPLY AIR TEMPERATURE
SD	STORM DRAIN
SEER	SEASONAL ENERGY EFFICIENCY RATIO
SF-X	SUPPLY FAN - NUMBER
SIM	SIMILAR
SP	STATIC PRESSURE
SQ	SQUARE
SQFT	SQUARE FEET
TC	THRU CEILING
TF	THRU FLOOR
TR	THRU ROOF
TYP.	TYPICAL
UH	UNIT HEATER
UOI	UNLESS OTHERWISE INDICATED
UON	UNLESS OTHERWISE NOTED
V	VOLTS
VRF	VARIABLE REFRIGERANT FLOW
VWV	VARIABLE WATER VOLUME
W	WIDTH
WB	WET BULB
WC	WATER COLUMN (PRESSURE)
WH	WALL HOOD
WL	WALL LOUVER
WWM	WELDED WIRE MESH
°	DEGREES
Ø	DIAMETER
Φ	OVAL

DESIGN CONDITIONS

	WINTER				SUMMER					
	INDOOR		OUTDOOR		INDOOR		OUTDOOR (1% DB)		OUTDOOR (1% WB)	
	DB (°F)	RH	DB (°F)	WB (°F)	DB (°F)	RH	DB (°F)	WB (°F)	DB (°F)	WB (°F)
CONDITIONED	68	-	27	25	-	-	91	77	87	79

SYM	DESCRIPTION	DATE	APPR

NAVFAC

SEAL

A/E INFO

APPROVED
Digitally signed by Vince Del Greco, P.E.
FOR COMMANDER NAVFAC
ACTIVITY: Approved by LCDR VINCE DEL GRECO, ROICC with PWD YORKTOWN, via Email.
SATISFACTORY TO DATE: 03/26/2026

DES	RJS	DRW	RJS
CHK	FCF		
PM/DM	MME/JWW		
BRANCH MANAGER	DJD		
CHIEF ENG/ARCH	JWJ		
FIRE PROTECTION	HPN		

DEPARTMENT OF THE NAVY
NAVAL FACILITIES ENGINEERING SYSTEMS COMMAND
MIDLANT DC CORE
NAVAL FACILITIES ENGINEERING SYSTEMS COMMAND - MID-ATLANTIC
NAVAL STATION - NORFOLK, VA
NAVAL WEAPONS STATION YORKTOWN, VIRGINIA
P171 WEAPON MAGAZINES
FORKLIFT CHARGING STATION
MECHANICAL ABBREVIATIONS, NOTES, AND SYMBOLS

SCALE:	AS NOTED
EPROJECT NO.:	1737010
CONSTR. CONTR. NO.	
NAVFAC DRAWING NO.	12942174
SHEET	486 OF 499

M-001B

DRAWFORM REVISION: 25 AUGUST 2020

3/31/2026 3:05:56 PM M-001B
C:\Users\raymond.limpin\Documents\P171-1737010-M-R21-FORKLIFT_raymond.limpin.rvt

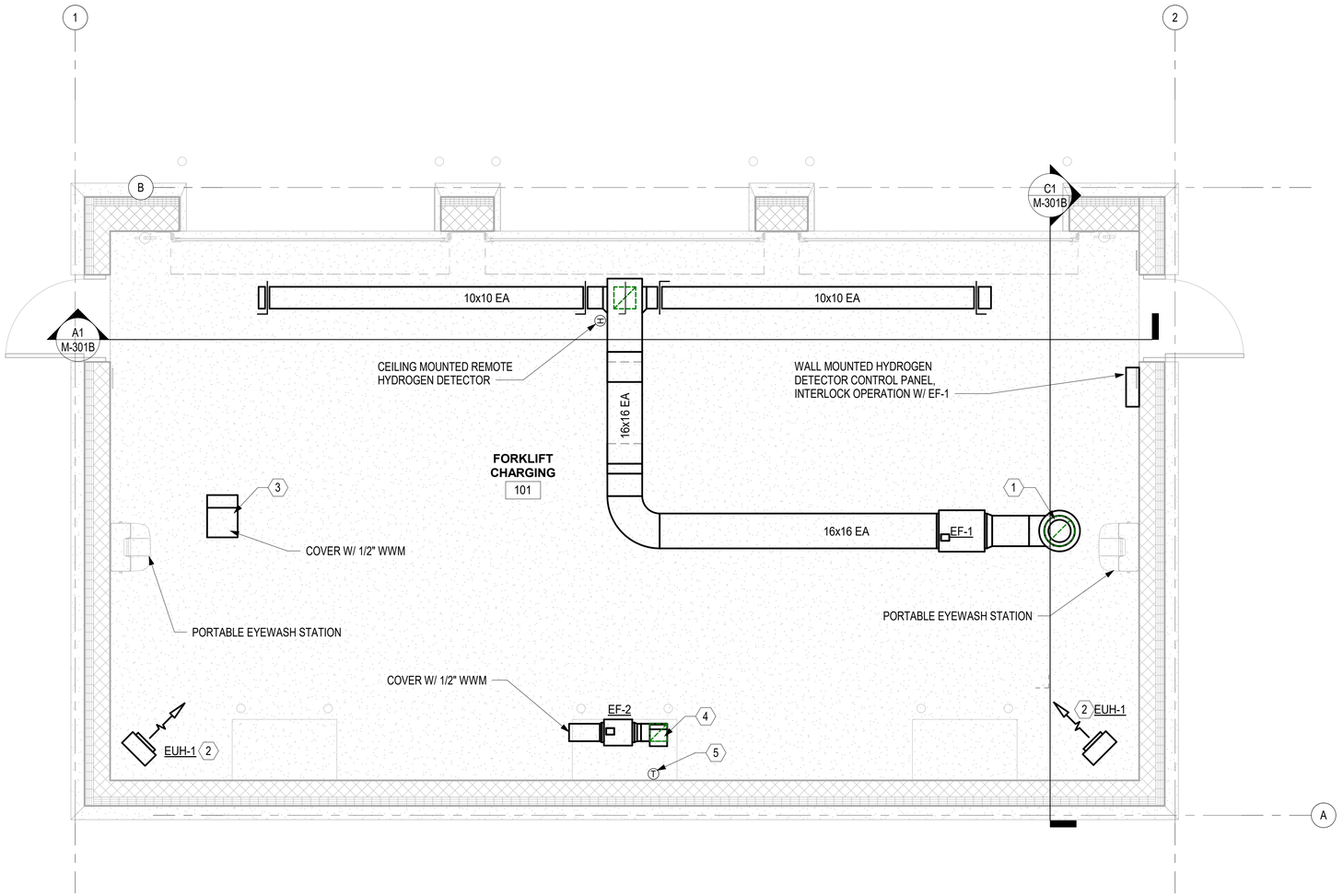

FLOOR PLAN - FORKLIFT CHARGING

SCALE: 3/8" = 1'-0"

PLAN NORTH

MECHANICAL SHEET NOTES

1. COORDINATE DUCTWORK, EQUIPMENT, APPURTENANCE, AND DEVICE CONFIGURATION, SUPPORT, AND LOCATION SHOWN ON THIS DRAWING WITH DOOR ASSEMBLIES, ELECTRICAL LIGHTING, POWER, AND LOCATION OF ROOF PENETRATIONS SHOWN ON SHEETS S-102A, A-102A, E-101A, AND E-102A.
2. COORDINATE WITH STRUCTURAL, ARCHITECTURAL, PLUMBING, AND ELECTRICAL WORK.

KEYNOTES

1. 14"ø DUCT UP TO RAIN CAP.
2. EUH-1 MUST BE MOUNTED 8'6"AFF.
3. 14x14 DUCT UP TO GV-1, 14x14 DUCT MUST EXTEND 6" FROM ROOF INTO CHARGING STATION SPACE.
4. 8x8 DUCT UP TO ROOF CAP.
5. THERMOSTAT MUST HAVE INSULATED WALL BACKING.

GRAPHIC SCALE(S)

3/8" = 1' - 0" 0 1' 2' 3' 4' 5' 10'

SYM	DESCRIPTION	DATE	APPR

NAVFAC

SEAL

A/E INFO

APPROVED
James E. Donohue, P.A.
FOR COMMANDER NAVFAC 4/22/2026

ACTIVITY
Approved by LCDR VINCE DEL GRECO, ROICC with PWD YORKTOWN, via Email,

SATISFACTORY TO DATE	03/26/2026
DES RJS	DRW RJS CHK FCF
PM/DM	MME/JWW
BRANCH MANAGER	DJD
CHIEF ENG/ARCH	JWJ
FIRE PROTECTION	HPN

DEPARTMENT OF THE NAVY
NAVAL FACILITIES ENGINEERING SYSTEMS COMMAND
NAVAL FACILITIES ENGINEERING SYSTEMS COMMAND - MID-ATLANTIC
MIDLANT DC CORE
NAVAL STATION - NORFOLK, VA
NAVAL WEAPONS STATION
YORKTOWN, VIRGINIA
P171 WEAPON MAGAZINES
FORKLIFT CHARGING STATION
FLOOR PLAN

SCALE:	AS NOTED
EPROJECT NO.:	1737010
CONSTR. CONTR. NO.	
NAVFAC DRAWING NO.	12942175
SHEET	487 OF 499

M-101B

DRAWFORM REVISION: 25 AUGUST 2020

3/31/2026 3:05:58 PM M-101B
C:\Users\raymond.limpin\Documents\P171-1737010-M-R21-FORKLIFT_raymond.limpin.rvt

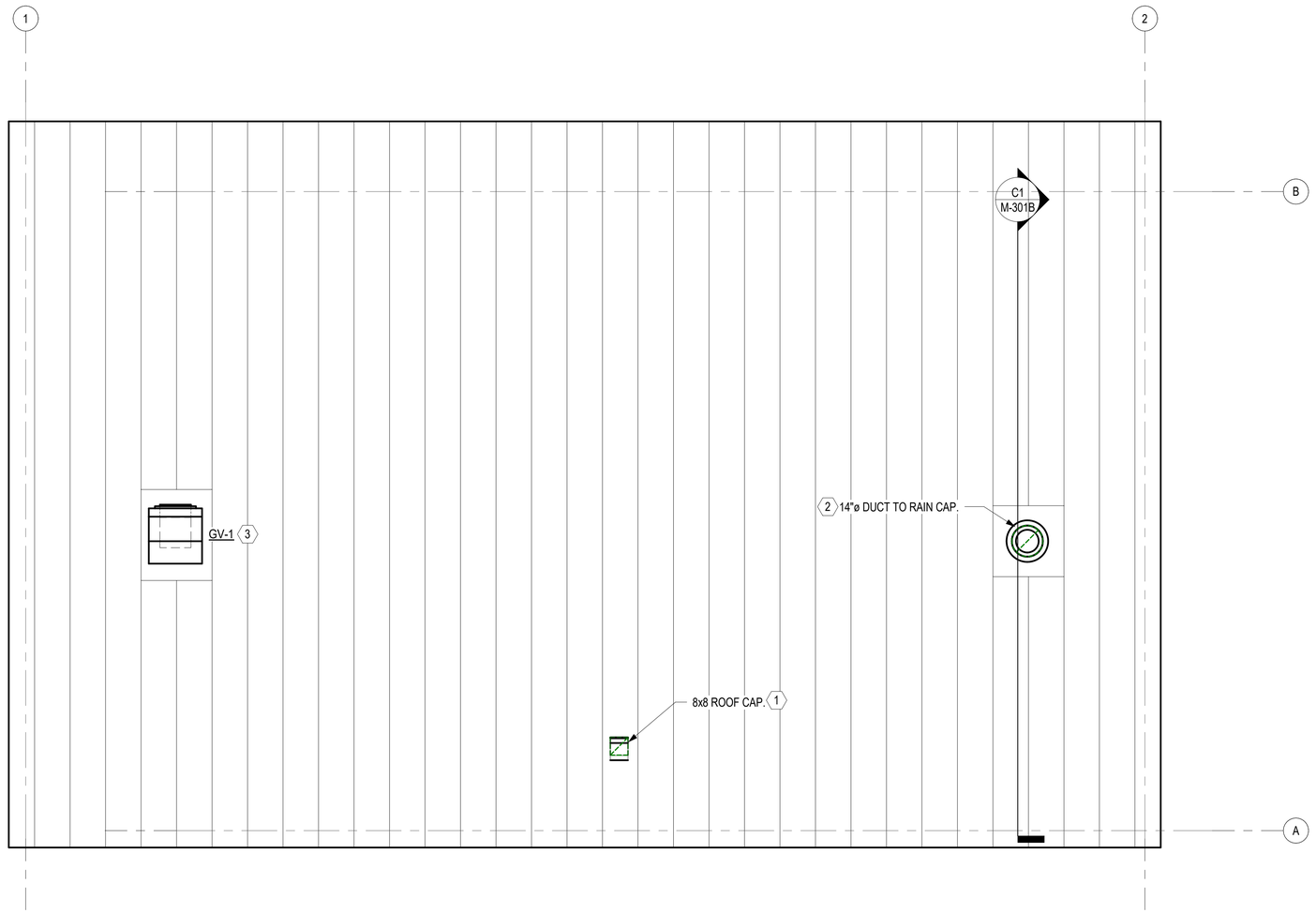

ROOF PLAN - FORKLIFT CHARGING STATION

SCALE: 3/8" = 1'-0"

PLAN NORTH

MECHANICAL SHEET NOTES

KEYNOTES

1 SEE DETAIL A1 ON SHEET A-502A.
2 SEE DETAILS C1, C5, A5, ON SHEET A-502A.
3 SEE DETAIL B1, D3 ON SHEET A-502A.

GRAPHIC SCALE(S)

3/8" = 1' - 0" 0 1' 2' 3' 4' 5' 10'

SYM	DESCRIPTION	DATE	APPR

NAVFAC

SEAL

A/E INFO

APPROVED
Jessica E. Cardona, P.E.
FOR COMMANDER NAVFAC

ACTIVITY
Approved by LCDR VINCE DEL GRECO, ROICC with PWD YORKTOWN, via Email.

SATISFACTORY TO DATE 03/26/2026

DES	RJS	DRW	RJS	CHK	FCF

PM/DM	MME/JWW
BRANCH MANAGER	DJD
CHIEF ENG/ARCH	JWJ
FIRE PROTECTION	HPN

DEPARTMENT OF THE NAVY
NAVAL FACILITIES ENGINEERING SYSTEMS COMMAND
MIDLANT DC CORE
NAVAL FACILITIES ENGINEERING SYSTEMS COMMAND - MID-ATLANTIC
NAVAL STATION - NORFOLK, VA
NAVAL WEAPONS STATION
YORKTOWN, VIRGINIA
P171 WEAPON MAGAZINES
FORKLIFT CHARGING STATION
ROOF PLAN

SCALE:	AS NOTED
EPROJECT NO.:	1737010
CONSTR. CONTR. NO.	
NAVFAC DRAWING NO.	12942176
SHEET	488 OF 499

M-102B

DRAWFORM REVISION: 25 AUGUST 2020

3/31/2026 3:05:58 PM M-102B
C:\Users\raymond.limpin\Documents\P171-1737010-M-R21-FORKLIFT_raymond.limpin.rvt

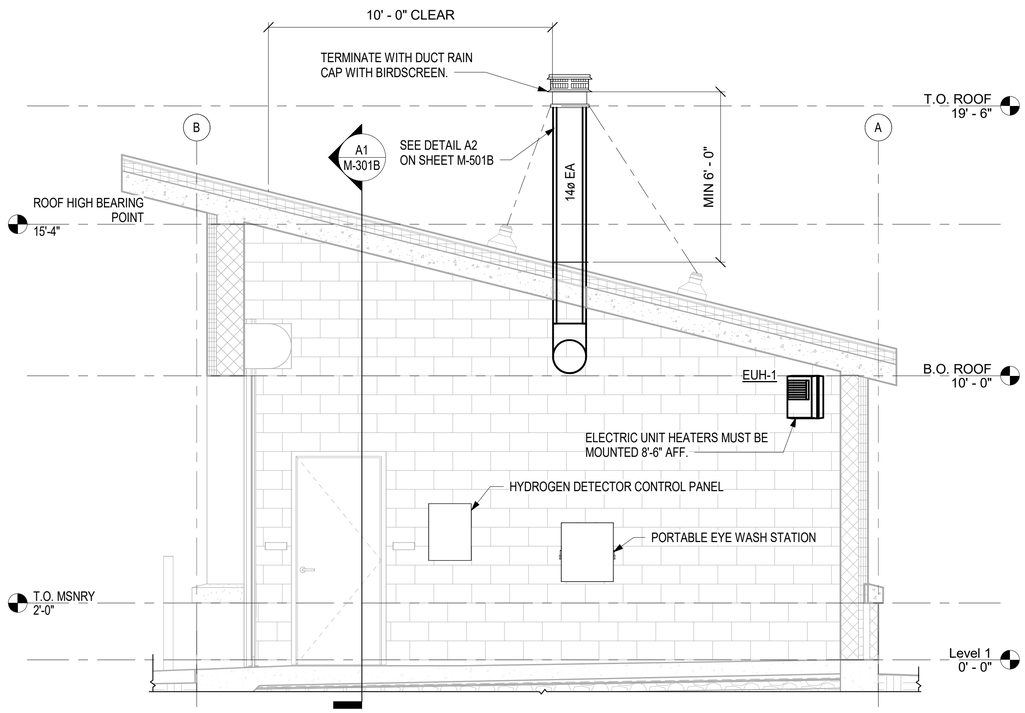

C1 EF-1 EXHAUST DUCT TERMINATION

SCALE: 3/8" = 1'-0" (M-101B) (M-102A)

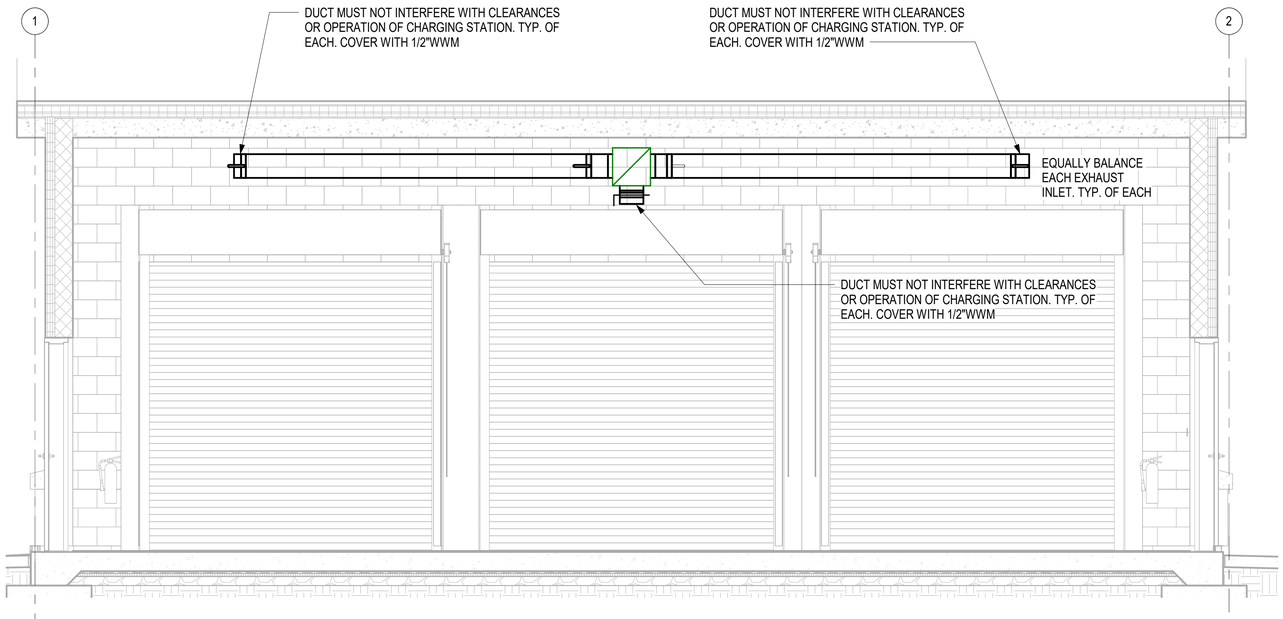

A1 HYDROGEN EXHAUST DUCTING

SCALE: 3/8" = 1'-0" (M-101B) (M-102A)

MECHANICAL SHEET NOTES

GRAPHIC SCALE(S)

3/8" = 1' - 0"

0 1' 2' 3' 4' 5' 10'

SYM	DESCRIPTION	DATE	APPR

NAVFAC

SEAL

A/E INFO

APPROVED

FOR COMMANDER NAVFAC

ACTIVITY
Approved by LCDR VINCE DEL GRECO, ROICC with PWD YORKTOWN, via Email,

SATISFACTORY TO DATE 03/26/2026

DES	RJS	DRW	RJS	CHK	FCF

PM/DM	MME/JWW
BRANCH MANAGER	DJD
CHIEF ENG/ARCH	JWJ
FIRE PROTECTION	HPN

DEPARTMENT OF THE NAVY
NAVAL FACILITIES ENGINEERING SYSTEMS COMMAND
MIDLANT DC CORE

NAVAL FACILITIES ENGINEERING SYSTEMS COMMAND - MID-ATLANTIC
NAVAL STATION - NORFOLK, VA

NAVAL WEAPONS STATION YORKTOWN, VIRGINIA
P171 WEAPON MAGAZINES
FORKLIFT CHARGING STATION

SECTIONS

SCALE: AS NOTED
EPROJECT NO.: 1737010
CONSTR. CONTR. NO.

NAVFAC DRAWING NO.
12942177

SHEET 489 OF 499

M-301B

DRAWFORM REVISION: 25 AUGUST 2020

4/20/2026 7:49:29 AM M-301B
C:\Revit Local Files\P171-173701\0-M-R21-FORKLIFT_gareth.ratti.rvt

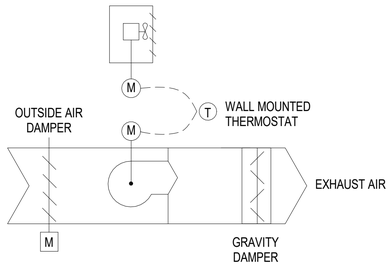

SEQUENCE OF OPERATION

THE EXHAUST FAN AND UNIT HEATER MUST OPERATE UNDER MANUFACTURER'S CONTROLS.

ON A RISE IN TEMPERATURE (ABOVE 85°F ADJ), THE EXHAUST FAN MUST BE ENERGIZED AND OUTSIDE AIR MOTORIZED DAMPER OPENED. ONCE THE ZONE TEMPERATURE IS SATISFIED, THE EXHAUST FAN MUST BE DE-ENERGIZED AND THE OUTSIDE AIR DAMPER MUST CLOSE.

ON A FALL IN SPACE TEMPERATURE BELOW 68°F (ADJ), THE UNIT HEATER HEATING COIL MUST BE ENABLED, AND AFTER A TIME DELAY, THE FAN MUST BE ENABLED. ON A RISE IN ROOM TEMPERATURE ABOVE 68°F, (ADJ), THE REVERSE MUST OCCUR.

D1 UNIT CONTROLS - UNIT HEATER AND EXHAUST FAN (EF-2)

SCALE: NOT TO SCALE

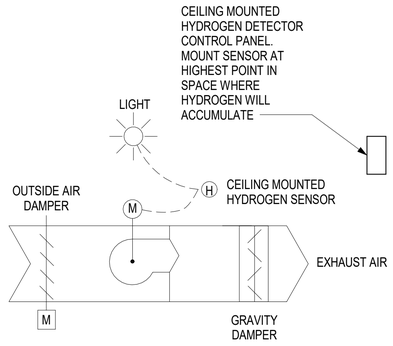

SEQUENCE OF OPERATION

THE EXHAUST FAN MUST OPERATE UNDER MANUFACTURER'S CONTROLS.

IF THE HYDROGEN SENSOR SENSES HYDROGEN ABOVE 10,000 PPM THE EXHAUST FAN MUST ENERGIZE AND THE HYDROGEN EXHAUST SYSTEM OPERATION LIGHT MUST TURN ON. ONCE THE HYDROGEN LEVEL FALLS BELOW 10,000 PPM THE EXHAUST FAN MUST DE-ENERGIZE AND THE LIGHT MUST TURN OFF.

THE GRAVITY VENTILATOR HAS A MOTORIZED DAMPER AND MUST OPEN AND CLOSE PER THE EXHAUST FANS OPERATION.

B1 UNIT CONTROLS - HYDROGEN EXHAUST FAN (EF-1)

SCALE: NOT TO SCALE

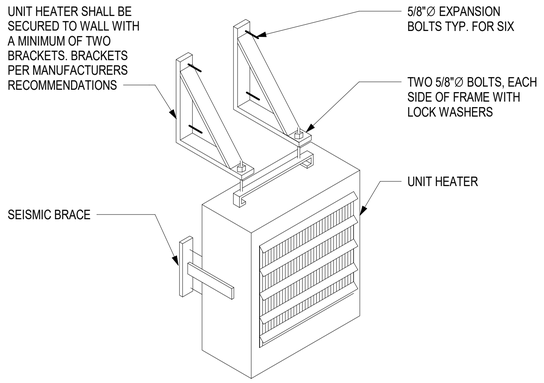

A1 DETAIL - ELECTRIC UNIT HEATER

SCALE: NOT TO SCALE

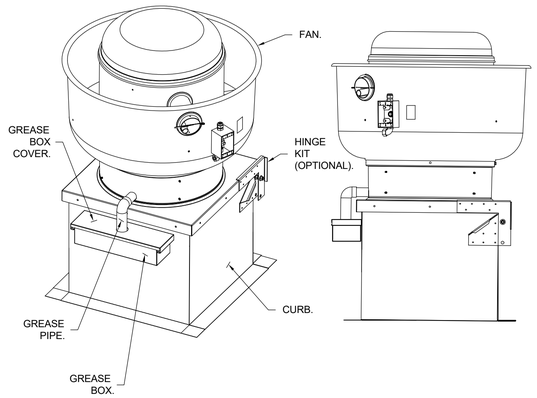

A2 DETAIL - EXHAUST FAN

SCALE: 3/4" = 1'-0"

SYM	DESCRIPTION	DATE	APPR

NAVFAC

SEAL

A/E INFO

APPROVED

FOR COMMANDER NAVFAC

ACTIVITY: Approved by LCDR VINCE DEL GRECO, ROICC with PWD YORKTOWN, via Email.

SATISFACTORY TO DATE: 03/26/2026

DES	RJS	DRW	RJS	CHK	FCF

PM/DM	MME/JWW
BRANCH MANAGER	DJD
CHIEF ENG/ARCH	JWJ
FIRE PROTECTION	HPN

DEPARTMENT OF THE NAVY
NAVAL FACILITIES ENGINEERING SYSTEMS COMMAND
MIDLANT DC CORE

NAVAL FACILITIES ENGINEERING SYSTEMS COMMAND - MID-ATLANTIC
NAVAL STATION - NORFOLK, VA

NAVAL WEAPONS STATION YORKTOWN, VIRGINIA
P171 WEAPON MAGAZINES
FORKLIFT CHARGING STATION

MECHANICAL DETAILS & CONTROLS

SCALE:	AS NOTED
EPROJECT NO.:	1737010
CONSTR. CONTR. NO.	
NAVFAC DRAWING NO.	12942178
SHEET	490 OF 499

M-501B

DRAWFORM REVISION: 25 AUGUST 2020

3/31/2026 3:05:59 PM M-501B
C:\Users\raymond.limpin\Documents\P171-1737010-M-R21-FORKLIFT_raymond.limpin.rvt

EXHAUST FAN SCHEDULE

MARK	LOCATION	SERVICE	TYPE	CFM	ESP (IN.WG)	FAN DATA			ELECTRICAL DATA				REMARKS
						RPM	TIP SPEED FPM	MAX SONES	HP	ELECTRICAL DATA V	PH	Hz	
EF-1	CEILING MOUNTED	EXHAUST AIR	INLINE FAN	850	0.45	1140	3917	5.8	1/6	208	1	60	1,2,3,4
EF-2	CEILING MOUNTED	EXHAUST AIR	INLINE FAN	175	0.35	1554	0	4.2	1/15	120	1	60	1, 2,3,4

REMARKS:
1. PROVIDE AMCA SPARK B RESISTANCE.
2. PROVIDE FACTORY INSTALLED DISCONNECT SWITCH.
3. PROVIDE FACTORY INSTALLED BACKDRAFT DAMPER.
4. PROVIDE STAINLESS STEEL HOUSING.

UNIT HEATER SCHEDULE

MARK	LOCATION	TYPE	CFM	BTU/ HR	ELECTRICAL DATA				REMARKS
					kW	V	PH	HZ	
EUH-1	101	CEILING HUNG	300	26511	7.50	208	3	60	1,2,3

REMARKS:
1. PROVIDE FACTORY MOUNTED INTEGRAL THERMOSTAT.
2. PROVIDE FACTORY INSTALLED DISCONNECT SWITCH.
3. PROVIDE AMCA SPARK B RESISTANCE.

GRAVITY VENTILATOR SCHEDULE

MARK	LOCATION	SERVICE	TYPE	CFM	ESP (IN.WG)	ROOF OPENING SIZE	REMARKS
GV-1	ROOF	MAKEUP AIR	FABRA HOOD	850	0.51	14x14	1,2,3,4

REMARKS:
1. PROVIDE FACTORY INSTALLED DISCONNECT SWITCH.
2. PROVIDE FACTORY MOUNTED GRAVITY DAMPER.
3. PROVIDE STAINLESS STEEL CONSTRUCTION.
4. PROVIDE AMCA SPARK B RESISTANCE.

DUCT CONSTRUCTION AND LEAK CLASSIFICATION SCHEDULE

SYSTEM	TYPE OF PRESSURE	SMACNA PRESSURE CLASS (IN WC)	SEAL CLASSIFICATION PER SMACNA	TYPE OF DUCTWORK		LEAKAGE CLASS
				SHAPE	MATERIAL	
EXHAUST & OUTSIDE AIR DUCTWORK:						
DUCTWORK UNDER POSITIVE CONDITIONS	POSITIVE	+2	A	RECTANGULAR	G90 GALV. STEEL	6
				ROUND & FLAT OVAL	G90 GALV. STEEL	3
DUCTWORK UNDER NEGATIVE CONDITIONS	NEGATIVE	-2	A	RECTANGULAR	G90 GALV. STEEL	6
				ROUND & FLAT OVAL	G90 GALV. STEEL	3
TRANSFER & RELIEF DUCTWORK:						
DUCTWORK UNDER POSITIVE CONDITIONS	POSITIVE	+2	A	RECTANGULAR	G90 GALV. STEEL	6
				ROUND & FLAT OVAL	G90 GALV. STEEL	3
DUCTWORK UNDER NEGATIVE CONDITIONS	NEGATIVE	-2	A	RECTANGULAR	G90 GALV. STEEL	6
				ROUND & FLAT OVAL	G90 GALV. STEEL	3

SYM | DESCRIPTION | DATE | APPR

SEAL

A/E INFO

APPROVED
FOR COMMANDER NAVFAC
ACTIVITY
Approved by LCDR VINCE DEL GRECO, ROICC with PWD YORKTOWN, via Email.
SATISFACTORY TO DATE 03/26/2026

DES	RJS	DRW	RJS	CHK	FCF
PM/DM	MME/JWW				
BRANCH MANAGER	DJD				
CHIEF ENG/ARCH	JWJ				
FIRE PROTECTION	HPN				

DEPARTMENT OF THE NAVY
NAVAL FACILITIES ENGINEERING SYSTEMS COMMAND
MIDLANT DC CORE
NAVAL FACILITIES ENGINEERING SYSTEMS COMMAND - MID-ATLANTIC
NAVAL STATION - NORFOLK, VA
NAVAL WEAPONS STATION YORKTOWN, VIRGINIA
P171 WEAPON MAGAZINES
FORKLIFT CHARGING STATION
MECHANICAL SCHEDULES

SCALE: AS NOTED
EPROJECT NO.: 1737010
CONSTR. CONTR. NO.
NAVFAC DRAWING NO. 12942179
SHEET 491 OF 499

M-601B

DRAWFORM REVISION: 25 AUGUST 2020

3/31/2026 3:06:00 PM M-601B
C:\Users\raymond.limprin\Documents\P171-1737010-M-R21-FORKLIFT_raymond.limprin.rvt

ELECTRICAL LEGEND

GENERAL

- (#) — ELECTRICAL KEY WORK NOTE - REFER TO "DEMOLITION NOTES" AND "NEW WORK NOTES" FOR EACH SHEET
- ◇(#) — SPECIALTY NOTE - REFER TO "SPECIALTY NOTES" FOR EACH SHEET
- #. — GENERAL NOTE - REFER TO "GENERAL NOTES" FOR EACH SHEET
- ——— OBJECTS ON DRAWINGS AT THIS LINETYPE ARE CATEGORIZED AS NEW OR PROPOSED FOR CONSTRUCTION, UON.
- – – – – OBJECTS ON DRAWINGS AT THIS LINETYPE ARE CATEGORIZED AS EXISTING TO BE REMOVED-DEMOLISHED, UON.
- ——— OBJECTS ON DRAWINGS AT THIS LINETYPE ARE CATEGORIZED AS EXISTING TO REMAIN, UON.
- NEW TO EXISTING CONNECTION
- REMOVE TO THIS POINT

LIGHTING

- XX — LUMINAIRE TYPE. SEE LUMINAIRE SCHEDULE, SHEET E-601B.
- LED LUMINAIRE. (⊣ INDICATES BRACKET, WALL MOUNTED.)
- LED EMERGENCY LUMINAIRE. (⊣ INDICATES BRACKET, WALL MOUNTED.)
- LED EXIT LUMINAIRE. ARROW, WHEN USED, INDICATES DIRECTION. (⊣ INDICATES BRACKET, WALL MOUNTED.) FILLED IN QUADRANT(s) OF SYMBOL INDICATES NUMBER AND ORIENTATION OF ILLUMINATED FACES.
- EMERGENCY BATTERY POWERED LED LIGHTING UNIT.
- S# — TOGGLE SWITCH, 20A, 120/277V. MOUNT 48" AFF UON. SUBSCRIPT "2" = 2 WAY, "3" = 3 WAY, "4" = 4 WAY.
- SLV — LOW VOLTAGE SWITCH. MOUNT 48" AFF UON.
- (OS) — OCCUPANCY SENSOR, DUAL TECHNOLOGY. CEILING MOUNTED UON.

POWER

- 20A, 120V DUPLEX CONVENIENCE RECEPTACLE. MOUNT 18" AFF UON. 'GFI' DENOTES INTERNAL GROUND FAULT INTERRUPTER, 'WP' DENOTES WEATHER PROOF ENCLOSURE AND 'C' DENOTES FLUSH MOUNTED IN CEILING
- 20A, 120V DUPLEX CONVENIENCE RECEPTACLE UTILIZING GROUND FAULT PROTECTION. MOUNT 6" ABOVE COUNTER UON. 'WP' DENOTES WEATHER PROOF ENCLOSURE
- QUADRUPLEX CONVENIENCE RECEPTACLE MOUNTED IN TWO-GANG OUTLET BOX - EACH RATED 20A, 125 VOLTS WITH SINGLE COVER PLATE, MOUNT 18" AFF, UON.
- (J) — JUNCTION BOX. MINIMUM 4" SQUARE X 2 1/8" SIZE PER NEC.
- GROUND BAR
- 3CB — PUSH BUTTON CONTROLLER FOR OVERHEAD DOORS.

EQUIPMENT CONNECTIONS

- (E) — EQUIPMENT CONNECTION
- SM — MOTOR RATED SWITCH OR MANUAL MOTOR STARTER WITH OVERLOADS.
- 3P 30/20 3R — DISCONNECT SWITCH. 3P = NO. OF POLES, 30 = SWITCH RATING, 20 = FUSE RATING (NF = INDICATES NON-FUSED), 3R OR 4X INDICATES NEMA RATING.
- DISCONNECT SWITCH PROVIDED INTEGRAL WITH EQUIPMENT

WIRE, CONDUIT, AND RACEWAY

- BRANCH CIRCUIT OR FEEDER WIRING IN CONDUIT. NO TICK MARKS INDICATE 2-#12 CONDUCTORS & 1-#12 GND. IN 3/4" CONDUIT UON. CONDUIT LARGER THAN 3/4" & WIRE LARGER THAN #12 SHALL BE INDICATED.
- L2A-1,3 — HOMERUN TO PANEL. PANEL & CIRCUIT DESIGNATIONS AS INDICATED.
- CONDUIT TURNED UP
- CONDUIT TURNED DOWN

DISTRIBUTION

- 208Y/120V PANELBOARD.
- SPD — SURGE PROTECTION DEVICE

TELEPHONE/DATA

- TELEPHONE OUTLET. MOUNT 18" AFF. UON.
- DATA OUTLET. MOUNT 18" AFF. UON.
- COMBINATION VOICE/DATA OUTLET. MOUNT 18" AFF. UON.
- TELEPHONE TERMINAL BACKBOARD

LIGHTNING PROTECTION

- DRIVEN GROUND ROD. "TW" INDICATES GROUND TEST WELL WITH GROUND ROD.
- AIR TERMINAL
- BOND CONNECTION EXOTHERMICALLY WELD, UON.
- —G—G— GROUND CONDUCTOR - DESCRIPTION AS INDICATED.
- —M—M— MAIN LIGHTNING CONDUCTOR - DESCRIPTION AS INDICATED.
- —B—B— BONDING CONDUCTOR - DESCRIPTION AS INDICATED.
- —D—D— DOWN CONDUCTOR - DESCRIPTION AS INDICATED.

ABBREVIATIONS

1/C	ONE CONDUCTOR
A	AMPERAGE OR AMPS
AFF	ABOVE FINISHED FLOOR
AHU	AIR HANDLING UNIT
ARF	ABOVE RAISED FLOOR
BFG	BELOW FINISHED GRADE
BH	BASEBOARD HEATER
BKR	BREAKER
C	CONDUIT
CB	CIRCUIT BREAKER
CKT	CIRCUIT
DWG	DRAWING
EA	EACH
EC	EMPTY CONDUIT
ELEC	ELECTRICAL
EMT	ELECTRICAL METALLIC TUBING
ENCL	ENCLOSURE
EQUIP	EQUIPMENT
EWC	ELECTRIC WATER COOLER
EWH	ELECTRIC WATER HEATER
EXIST	EXISTING
EXP	EXPLOSION PROOF EQUIPMENT
FCU	FAN COIL UNIT
FT	FEET
GFCI	GOVERNMENT FURNISHED CONTRACTOR INSTALLED
GFE	GOVERNMENT FURNISHED EQUIPMENT
GFGI	GOVERNMENT FURNISHED GOVERNMENT INSTALLED
GFI	GROUND FAULT INTERRUPTER
GND	GROUND
HGT	HEIGHT
HID	HIGH INTENSITY DISCHARGE
HP	HORSEPOWER
HUB	COMPUTER DISTRIBUTION HUB
LED	LIGHT EMITTING DIODE
LTS	LUMINAIRE
MCB	MAIN CIRCUIT BREAKER
MDP	MAIN DISTRIBUTION PANEL
MECH	MECHANICAL
MLO	MAIN LUGS ONLY
MTD	MOUNTED
MTG HT	MOUNTING HEIGHT
NEC	NATIONAL ELECTRICAL CODE
NF	NON FUSIBLE
NIC	NOT IN CONTRACT
NL	NIGHT LIGHT
NTS	NOT TO SCALE
OBI	OUTLET BASE INFEED
OS	OCCUPANCY SENSOR
PNL	PANEL
PNLBD	PANELBOARD
PVC	POLYVINYL CHLORIDE CONDUIT
QU	QUANTITY
REC	RECEPTACLE
REQ'D	REQUIRED
RGS	RIGID GALVANIZED STEEL
RM	ROOM
SE	SERVICE ENTRANCE
SHT	SHEET
SUB	SUBSTATION
SWBD	SWITCHBOARD
T	TELEPHONE
TYP	TYPICAL
UON	UNLESS OTHERWISE NOTED
V	VOLTAGE OR VOLTS
VRF	VARIABLE REFRIGERANT FLOW UNIT
W	WIRE
WP	WEATHERPROOF
WW	WIREWAY (TROUGH)
X	IN SCHEDULES, ITEM NOT APPLICABLE
XFMR	TRANSFORMER
Ø	PHASE

GENERAL NOTES

1. ALL ELECTRICAL WORK AND MATERIAL IS NEW AND MUST BE PROVIDED BY THE CONTRACTOR UON.
2. AN EQUIPMENT GROUND WIRE MUST BE RUN WITH FEEDERS AND BRANCH CIRCUITS.
3. PROVIDE WIRING AS PER NATIONAL ELECTRICAL CODE (NEC).
4. IDENTIFY AND LABEL ALL ELECTRICAL EQUIPMENT.
5. IDENTIFY FEEDERS/CIRCUITS AT EACH END OF THE WIRE AND AT EVERY SPLICE OR JUNCTION/PULL BOX.
6. PROVIDE NAMEPLATES ON THE EXTERIOR OF ELECTRICAL PANELS AND ENCLOSURES AS FOLLOWS:

PANEL XXXXX	DEVICE ID
100A, 208Y/120V-30, 4W	DEVICE RATING
FEEDS FROM PANEL MDP	POWER SOURCE
INSTALLED 2019	INSTALLATION DATE
DRAWING NO. ##,###,###	NAVFAC DRAWING NUMBER

   FOR DISCONNECT SWITCHES AND MOTOR STARTERS, THE TOP LINE SHALL BE THE NAME/DESIGNATION OF EQUIPMENT BEING FED BY SAME.
7. PROVIDE NEW TYPED DIRECTORIES FOR PANELS (NEW OR EXISTING) INCLUDED IN THIS PROJECT.
8. COORDINATE LOCATION AND POWER REQUIREMENTS OF ELECTRICAL DEVICES WITH MECHANICAL, PLUMBING, ARCHITECTURAL AND FIRE PROTECTION DRAWINGS.
9. PROVIDE ARC-FLASH LABELS ON ALL PANELS/DISCONNECT SWITCHES AS PER UFC 3-560-01 AND NFPA 70E. SEE DETAIL PLATE ON SHEET E-601B.
10. SINGLE PHASE (120/208V) BRANCH CIRCUITS MUST CONSIST OF 2#12 & 1#12 GND. IN 1/2"C UON. THREE PHASE BRANCH CIRCUITS CONSIST OF 3#12 & 1#12 GND IN 1/2"C UON.
11. REFER TO PLANS FOR CONDUCTOR SIZING. COMPLY WITH THE FOLLOWING GUIDELINES FOR CONDUCTOR RUN LENGTHS:

    20A,120V CIRCUITS LONGER THAN 100' - USE #10 AWG TO LIMIT VOLTAGE DROP ON BRANCH CIRCUITS TO 3%

    20A, 120V CIRCUITS LONGER THAN 150' - USE #8 AWG TO LIMIT VOLTAGE DROP ON BRANCH CIRCUITS TO 3%
12. COORDINATE ELECTRICAL WORK WITH ARCHITECTURAL, MECHANICAL AND FIRE PROTECTION WORK PRIOR TO FABRICATION AND INSTALLATION TO PREVENT CONFLICTS. NOTIFY CONTRACTING OFFICER WHERE CONFLICTS ARE DISCOVERED PRIOR TO CONSTRUCTION AND BEFORE BEGINNING WORK IN THOSE AREAS. ALL CONFLICTS THAT ARISE DUE TO LACK OF COORDINATION MUST BE RECTIFIED BY THE CONTRACTOR AT NO COST TO THE GOVERNMENT.

CONSTRUCTION NOTES

1. PROVIDE A MINIMUM OF 2 WEEKS NOTICE OF POWER OUTAGES TO ACTIVITY AND CONTRACTING OFFICER.

SYM	DESCRIPTION	DATE	APPR

NAVFAC

SEAL

A/E INFO

APPROVED
Vincent J. Greco, R.A.
FOR COMMANDER NAVFAC
ACTIVITY
Approved by LCDR VINCE DEL GRECO, ROICC with PWD YORKTOWN, via Email.
SATISFACTORY TO DATE 03/26/2026

DES	CPO	DRW	CPO
CHK	JDU		

PM/DM	MME/WJW
BRANCH MANAGER	WRB
CHIEF ENG/ARCH	JWJ
FIRE PROTECTION	HPN

DEPARTMENT OF THE NAVY
NAVAL FACILITIES ENGINEERING SYSTEMS COMMAND
MIDLANT DC CORE
NAVAL FACILITIES ENGINEERING SYSTEMS COMMAND - MID-ATLANTIC
NAVAL STATION - NORFOLK, VA
NAVAL WEAPONS STATION YORKTOWN, VIRGINIA
P171 WEAPON MAGAZINES
FORKLIFT CHARGING STATION
ELECTRICAL SYMBOLS, LEGEND, ABBREVIATIONS, AND NOTES

SCALE:	AS NOTED
EPROJECT NO.:	1737010
CONSTR. CONTR. NO.	
NAVFAC DRAWING NO.	12942182
SHEET	492 OF 499

E-001B

DRAWFORM REVISION: 25 AUGUST 2020

4/1/2026 1:08:47 PM E-001B
C:\Revit Local Files\P171-1737010-E-R21-CHRG_dayton.obrien.rvt

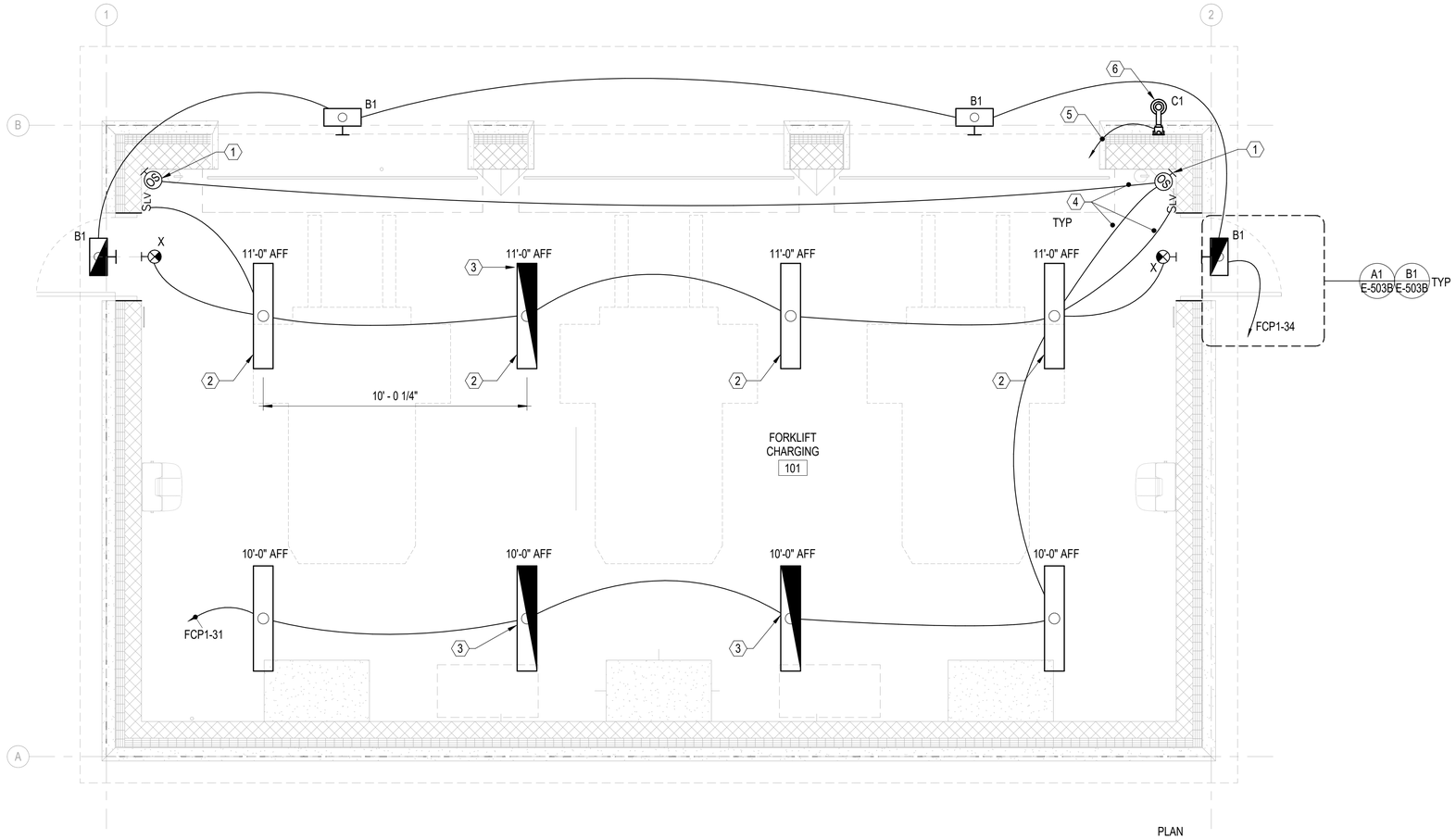

FORKLIFT CHARGING STATION - LIGHTING PLAN

3/8" = 1'-0"

PLAN NORTH

GENERAL NOTES

A. PROVIDE CIRCUITING TO EXIT LIGHTS AND EMERGENCY DRIVERS AHEAD OF ANY LOCAL SWITCHING.

B. SEE LUMINAIRE SCHEDULE ON SHEET E-601B FOR MOUNTING HEIGHTS OF EXTERIOR LUMINARIES AND EXIT LIGHTS.

C. PROVIDE SURFACE MOUNTED DEVICES (RECEPTACLES, JUNCTION BOXES, SWITCHES, ETC.) AND CONDUIT WITHIN INTERIOR OF BUILDING. PROVIDE RGS CONDUIT UP TO 10'-0" AFF. EMT CONDUIT MAY BE USED 10'-0" AFF AND HIGHER.

D. LOW VOLTAGE SWITCHES, OCCUPANCY SENSORS, AND POWER PACK/LOAD CONTROLLER MUST BE OF SAME MANUFACTURER.

KEYNOTES

1 PROVIDE WIDE VIEW, WALL MOUNTED OCCUPANCY SENSOR SUITABLE FOR HIGH HUMIDITY ENVIRONMENTS. SEE DETAILS A2 AND A3 ON SHEET E-501B.

2 COORDINATE LUMINAIRE MOUNTING HEIGHT WITH DUCTWORK. MOUNT LUMINAIRE BELOW DUCTWORK AND MAINTAIN ENOUGH CLEARANCE TO ACCESS DRIVER COMPARTMENT FROM ABOVE.

3 PROVIDE WITH 1400 LUMEN EMERGENCY BATTERY BACKUP.

4 PROVIDE CONTROL WIRING TO LOW VOLTAGE SWITCHES AND OCCUPANCY SENSORS AS REQUIRED BY MFGR.

5 EXTEND WIRING TO HYDROGEN GAS DETECTION SYSTEM AND CONNECT TO AVAILABLE N.O. RELAY. SEE DETAIL B1/E-601B.

6 FLASHING AMBER LED REMOTE SIGNAL LIGHT FOR HYDROGEN GAS DETECTION SYSTEM.

GRAPHIC SCALE(S)

3/8" = 1' - 0" 0 1' 2' 3' 4' 5' 10'

SYM	DESCRIPTION	DATE	APPR

NAVFAC

SEAL

A/E INFO

APPROVED

FOR COMMANDER NAVFAC

ACTIVITY
Approved by LCDR VINCE DEL GRECO, ROICC with PWD YORKTOWN, via Email.

SATISFACTORY TO DATE 03/26/2026

DES	CPO	DRW	CPO	CHK	JDU

PM/DM	MME/WJW
BRANCH MANAGER	WRB
CHIEF ENG/ARCH	JWJ
FIRE PROTECTION	HPN

DEPARTMENT OF THE NAVY
NAVAL FACILITIES ENGINEERING SYSTEMS COMMAND
MIDLANT DC CORE

NAVAL FACILITIES ENGINEERING SYSTEMS COMMAND - MID-ATLANTIC
NAVAL STATION - NORFOLK, VA

NAVAL WEAPONS STATION
YORKTOWN, VIRGINIA
P171 WEAPON MAGAZINES
FORKLIFT CHARGING STATION
LIGHTING PLAN

SCALE:	AS NOTED
EPROJECT NO.:	1737010
CONSTR. CONTR. NO.	
NAVFAC DRAWING NO.	12942183
SHEET	493 OF 499

E-101B

DRAWFORM REVISION: 25 AUGUST 2020

4/1/2026 1:08:48 PM E-101B
C:\Revit Local Files\P171-1737010-E-R21-CHRG_clayton.obrien.rvt

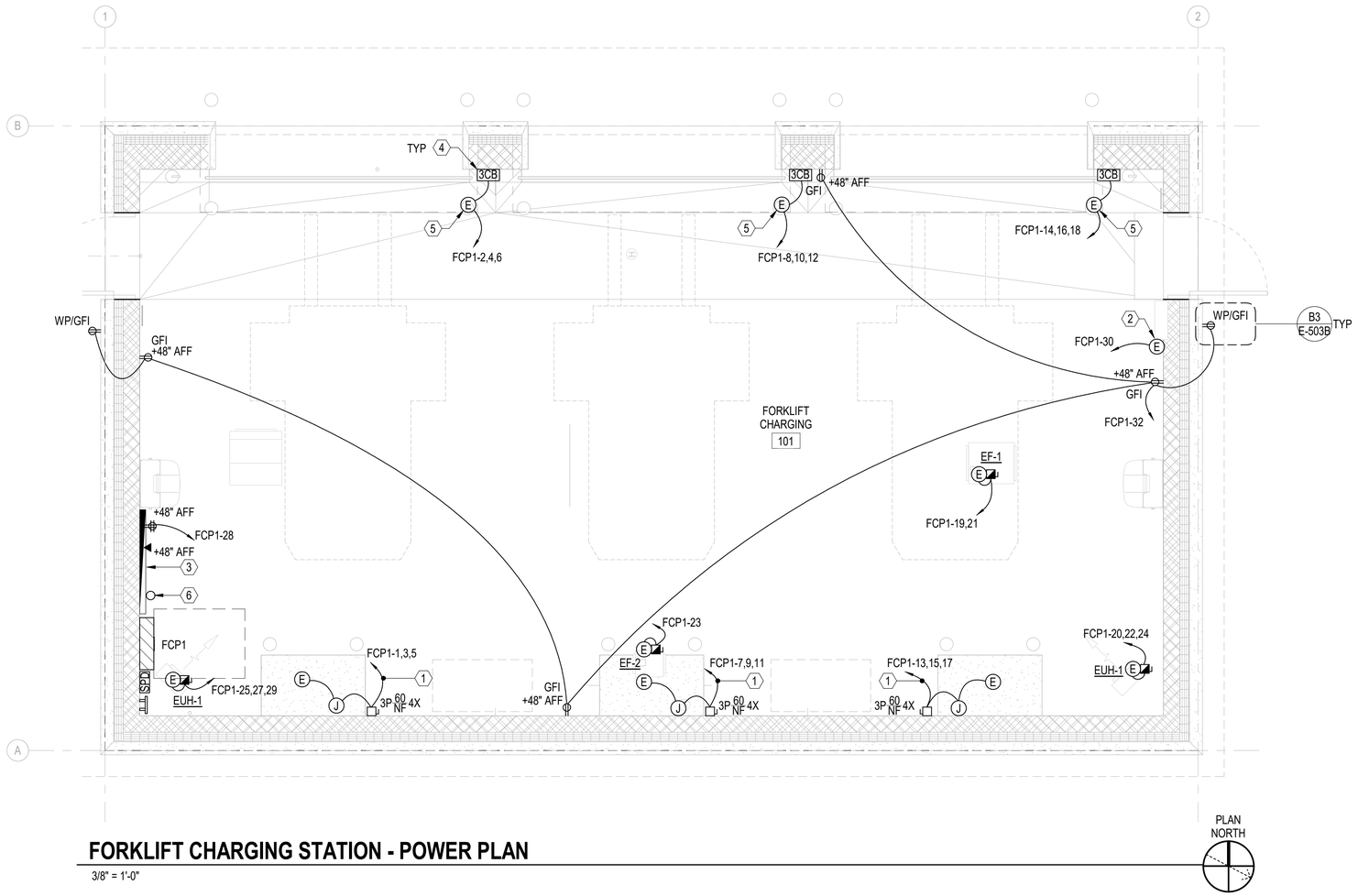

FORKLIFT CHARGING STATION - POWER PLAN

3/8" = 1'-0"

GENERAL NOTES

A. PROVIDE SURFACE MOUNTED DEVICES (RECEPTACLES, JUNCTION BOXES, SWITCHES, ETC.) AND CONDUIT WITHIN INTERIOR OF BUILDING. PROVIDE RGS CONDUIT UP TO 10'-0" AFF. EMT CONDUIT MAY BE USED 10'-0" AFF AND HIGHER.

B. PROVIDE POWER TO HYDROGEN GAS SENSING SYSTEM INSTALLED BY OTHERS. COORDINATE LOCATION OF CONTROL PANEL WITH INSTALLER.

KEYNOTES

1 (3) #6 THHN/THWN, (1) #10 AWG EGC IN 1"C.

2 VERIFY LOCATION OF HYDROGEN GAS DETECTION CONTROL PANEL PRIOR TO ELECTRICAL ROUGH-IN.

3 PROVIDE TELEPHONE BUILDING ENTRANCE TERMINALS AND TELECOM EQUIPMENT GROUND BUS AT TELECOM BACKBOARD.

4 PUSH BUTTON CONTROLS SUPPLIED BY DOOR SUPPLIER, INSTALLED BY CONTRACTOR. COORDINATE OVERHEAD DOOR CONTROLS LOCATION WITH END USER PRIOR TO ROUGH-IN.

5 VERIFY OVERHEAD DOOR MOTOR SIZE AND POWER CONNECTION PRIOR TO INSTALLATION AND ROUGH-IN OF ELECTRICAL.

6 4" CONDUIT FOR INCOMING TELECOM SERVICE.

GRAPHIC SCALE(S)

3/8" = 1' - 0" 0 1' 2' 3' 4' 5' 10'

SYM	DESCRIPTION	DATE	APPR

NAVFAC

SEAL

A/E INFO

APPROVED
Jamie E. Chaplin, P.E.
FOR COMMANDER NAVFAC 4/22/2026

ACTIVITY
Approved by LCDR VINCE DEL GRECO, ROICC with PWD YORKTOWN, via Email.

SATISFACTORY TO DATE 03/26/2026

DES CPO	DRW CPO	CHK JDU	
PM/DM			MME/WJW
BRANCH MANAGER			WRB
CHIEF ENG/ARCH			JWJ
FIRE PROTECTION			HPN

DEPARTMENT OF THE NAVY
NAVAL FACILITIES ENGINEERING SYSTEMS COMMAND
NAVAL FACILITIES ENGINEERING SYSTEMS COMMAND - MID-ATLANTIC
MIDLANT DC CORE
NAVAL STATION - NORFOLK, VA
NAVAL WEAPONS STATION
YORKTOWN, VIRGINIA
P171 WEAPON MAGAZINES
FORKLIFT CHARGING STATION
POWER PLAN

SCALE: AS NOTED
EPROJECT NO.: 1737010
CONSTR. CONTR. NO.
NAVFAC DRAWING NO. 12942184
SHEET 494 OF 499

E-102B

DRAWFORM REVISION: 25 AUGUST 2020

4/1/2026 1:08:49 PM E-102B
C:\Revit Local Files\P171-1737010-E-R21-CHRG_clayton.obrien.rvt

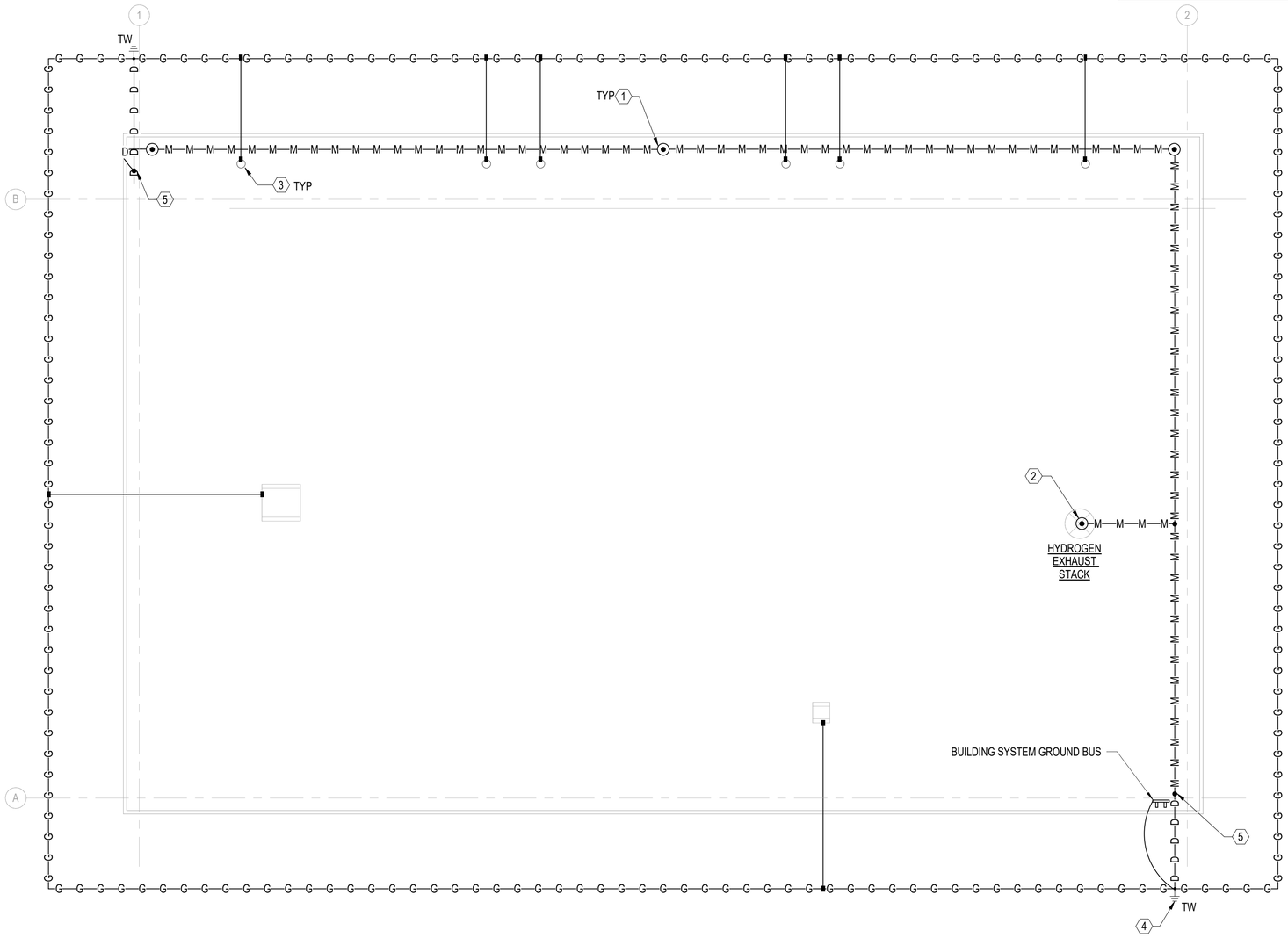

FORKLIFT CHARGING STATION - LIGHTNING PLAN

3/8" = 1'-0"

PLAN NORTH

KEYNOTES

#	
1	24" AIR TERMINAL, TYPE "A". SEE DETAIL C4/E-502B.
2	10" AIR TERMINAL, TYPE "B". SEE DETAIL D3/E-502B.
3	EXTERIOR STEEL BOLLARD. BOND BOLLARDS TO BUILDING GROUND RING. SEE DETAIL A3/E-503B.
4	GROUND TEST WELL WITH GROUND ROD. ALL BONDS WITHIN THE TEST WELL MUST BE BOLTED TYPE CONNECTIONS.
5	AT DOWN CONDUCTORS, BOND GROUNDED METAL BODIES WITHIN THE FIRST 6 FEET OF THE MAIN CONDUCTOR TO THE LIGHTNING PROTECTION SYSTEM IN ACCORDANCE WITH NFPA 780.

GENERAL NOTES

A. THE DESIGN SHOWN ON THIS PLAN IS INTENDED TO SHOW BASIC SYSTEM DESIGN. PROVIDE A LIGHTNING PROTECTION SYSTEM (LPS) IN ACCORDANCE WITH NFPA 780 CRITERIA USING COMPONENTS MANUFACTURED IN ACCORDANCE WITH UL96A.

B. LIGHTNING PROTECTION SYSTEMS MUST BE INSTALLED BY A COMPETENT PERSON(S) WITH A FULL UNDERSTANDING OF THE LIGHTNING PROTECTIONS STANDARDS: NFPA780 AND UL96A. THESE STANDARDS MUST BE FOLLOWED DURING THE DESIGN, INSTALLATION AND INSPECTION OF A LIGHTNING PROTECTION SYSTEM.

C. INSTALLER MUST BE CERTIFIED WITH A THIRD PARTY INSPECTION COMPANY WHOSE SOLE WORK IS LIGHTNING PROTECTION OR IS A UL LISTED LIGHTNING PROTECTION INSTALLER.

D. MATERIALS AND SYSTEM MUST BE CLASS 1.

E. CONDUCTOR BEND MUST NOT FORM A SHARPER ANGLE THAN 90 DEGREES OR HAVE A RADIUS LESS THAN 8 INCHES.

F. BOND METAL BODIES NOT SUBJECT TO DIRECT STRIKE TO THE LIGHTNING PROTECTION SYSTEM IN ACCORDANCE WITH UL96A.

G. MAKE CONNECTIONS TO GROUND AND/OR COUNTERPOISE AT A POINT NOT LESS THAN 30" BELOW GRADE, AND 2'-0" AWAY FROM THE DRIP LINE OF THE BUILDING.

H. PLACE AIR TERMINALS NOT MORE THAN 2'-0" FROM THE EDGES OF RIDGES, OUTSIDE CORNERS, OR OUTSIDE EDGES OF MAIN ROOFS AND EXTEND A MINIMUM OF 10" ABOVE OBJECT TO BE PROTECTED.

I. JOB CONDITIONS MAY DICTATE VARIATIONS IN AIR TERMINAL, CONDUCTORS, AND GROUND ROD LOCATIONS.

J. MAINTAIN A HORIZONTAL OR DOWNWARD PATH FREE FROM "U" AND "V" POCKETS IN CONDUCTOR PATH. ANY RISE IN HORIZONTAL CONDUCTOR MUST NOT EXCEED 8 INCHES.

K. CONDUCTOR MAY RISE UPWARDS AT A RATE OF NO MORE THAN 3" OF RISE PER 1'-0" RUN.

L. DO NOT PLACE COPPER LIGHTNING PROTECTION MATERIALS ON ALUMINUM, GALVANIZED STEEL, GALVALUME SURFACES OR ANY OTHER DISSIMILAR METAL SURFACES. (PAINTED OR NOT) NOR PLACE ALUMINUM MATERIALS ON COPPER SURFACES.

M. PROVIDE DOWN CONDUCTORS SURFACE MOUNTED ON EXTERIOR WALL IN 1" SCH 80 PVC CONDUIT. SUPPORT CONDUIT 12" FROM BOTH TOP AND BOTTOM OF RUN. PROVIDE INTERMEDIARY CONDUIT SUPPORTS AS REQUIRED, MAX. SPACING OF CONDUIT SUPPORTS NOT TO EXCEED 10'-0" BETWEEN HANGERS. PROVIDE CONDUIT SUPPORTS SUITABLE FOR EXTERIOR WALL CONSTRUCTION.

N. PENETRATIONS THROUGH ROOF SURFACES AND STRUCTURES WILL NOT BE ALLOWED EXCEPT WHERE SPECIFICALLY SHOWN AND APPROVED. ALL PENETRATIONS MUST BE PERFORMED IN AN APPROVED MANNER.

O. CONNECT ELECTRIC AND TELEPHONE SYSTEM GROUNDS WITH MAIN SIZE CONDUCTOR TO ONE LIGHTNING PROTECTION GROUND.

P. PROVIDE A SURGE PROTECTION DEVICE COMPLYING WITH NFPA 780 FOR LIGHTNING PROTECTION SYSTEMS ON EACH ELECTRIC AND TELEPHONE SERVICE ENTRANCE .

Q. BOND ALL METAL PIPES SUCH AS WATER, GAS, FIRE, STORM, SEWER, ETC., WHICH ENTER THE STRUCTURE TO THE NEAREST DOWN-LEAD, GROUND ROD OR COUNTERPOISE.

R. FASTEN MAIN LIGHTNING CONDUCTOR EVERY 36" ON CENTER MAXIMUM.

S. SPACE AIR TERMINALS 10" TO 23" TALL AT PERIMETER AND ON RIDGE UP TO 20'-0" MAXIMUM.

T. SPACE AIR TERMINALS 24" TALL AND OVER UP TO 25'-0" MAXIMUM.

U. INSTALL LIGHTNING PROTECTION SYSTEMS IN A NEAT, PROFESSIONAL MANNER.

V. MAKE HOLES TO RECEIVE THE BODY OF THE ANCHOR IN THE BRICK, STONE, OR OTHER MASONRY UNIT WHEN ANCHORING IN MASONRY. ANCHORS IN MORTAR JOINTS ARE NOT ACCEPTABLE.

W. PROVIDE QUALIFIED BIMETALLIC FITTINGS TO COORDINATE SYSTEM COMPONENTS FOR REQUIRED TRANSITIONS FROM ALUMINUM TO COPPER.

X. SEE FENCE GROUNDING DETAIL ON ES505.

GRAPHIC SCALE(S)

3/8" = 1' - 0" 0 1' 2' 3' 4' 5' 10'

SYM	DESCRIPTION	DATE	APPR

NAVFAC

SEAL

A/E INFO

APPROVED
James E. Gardner, R.A.

FOR COMMANDER NAVFAC

ACTIVITY
Approved by LCDR VINCE DEL GRECO, ROICC with PWD YORKTOWN, via Email.

SATISFACTORY TO DATE 03/26/2026

DES	CPO	DRW	CPO	CHK	JDU

PM/DM	MME/WJW
BRANCH MANAGER	WRB
CHIEF ENG/ARCH	JWJ
FIRE PROTECTION	HPN

DEPARTMENT OF THE NAVY
NAVAL FACILITIES ENGINEERING SYSTEMS COMMAND
MIDLANT DC CORE

NAVAL FACILITIES ENGINEERING SYSTEMS COMMAND - MID-ATLANTIC
NAVAL STATION - NORFOLK, VA

NAVAL WEAPONS STATION YORKTOWN, VIRGINIA
P171 WEAPON MAGAZINES
FORKLIFT CHARGING STATION
LIGHTNING PROTECTION PLAN

SCALE: AS NOTED
EPROJECT NO.: 1737010
CONSTR. CONTR. NO.
NAVFAC DRAWING NO. 12942185
SHEET 495 OF 499

E-103B

DRAWFORM REVISION: 25 AUGUST 2020

4/1/2026 1:08:49 PM E-103B
C:\Revit Local Files\P171-1737010-E-R21-CHRG_clayton.obrien.rvt

LUMINAIRE TYPE: A1

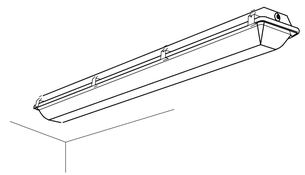

NOTE: THIS SKETCH IS A NON-PROPRIETARY GRAPHIC REPRESENTATION OF A LUMINAIRE THAT MAY MEET THE SPECIFICATION REQUIREMENTS. IT IS NOT INTENDED TO INDICATE A CERTAIN MANUFACTURER OR PREFERENCE.

LUMINAIRE REQUIREMENTS:

1. HOUSING - HIGH-IMPACT RESISTANT, FULLY GASKETED HOUSING CONSTRUCTED OF STAINLESS STEEL OR HEAVY-DUTY DIE CAST ALUMINUM SIZE AS INDICATED IN LUMINAIRE SCHEDULE.
2. OPTICS - UV-STABILIZED, HIGH-IMPACT, FROSTED POLYCARBONATE OR GLASS LENS.
3. LIGHT SOURCE - SOLID STATE LEDS, 4000K CCT UON, MINIMUM 80 CRI UON, AND MINIMUM EFFICACY OF 90 LUMENS/WATT UON. INITIAL LUMEN OUTPUT AS INDICATED IN LUMINAIRE SCHEDULE.
4. DRIVER - REPLACEABLE, INTEGRAL, HIGH-EFFICIENCY DIMMABLE DRIVER WITH MINIMUM 0.9 PF, OPERATING VOLTAGE OF 120-277V, THERMAL MANAGEMENT, AND < 20% THD. ON/OFF CONTROL AND FULLY DIMMABLE DOWN TO 10% MINIMUM OR AS INDICATED IN LUMINAIRE SCHEDULE.
5. CERTIFICATION - UL LISTED FOR WET LOCATION, ROHS COMPLIANT. DLC QUALIFIED. COMPLIES WITH IES LM79, LM80 AND TM21 TESTING STANDARDS. MEETS UL844 REQUIREMENTS FOR CLASS 1 DIVISION 2 HAZARDOUS LOCATIONS.
6. MOUNTING - CEILING OR WALL SURFACE-MOUNTED.
7. OPTIONS - INTEGRAL OCCUPANCY SENSOR, EMERGENCY BATTERY BACK-UP.

LED HAZARDOUS LOCATION LIGHT

REVISED:	NOVEMBER 2020	LIGHTING PLATE:	NL-22

LUMINAIRE TYPE: B1

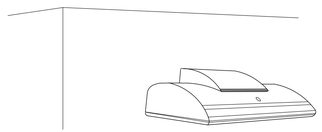

NOTE: THIS SKETCH IS A NON-PROPRIETARY GRAPHIC REPRESENTATION OF A LUMINAIRE THAT MAY MEET THE SPECIFICATION REQUIREMENTS. IT IS NOT INTENDED TO INDICATE A CERTAIN MANUFACTURER OR PREFERENCE.

LUMINAIRE REQUIREMENTS:

1. HOUSING - DIE-CAST OR EXTRUDED ALUMINUM WITH INTEGRAL PASSIVE COOLING MECHANISM. HEAT SINK INCORPORATED DIRECTLY INTO HOUSING OR DRIVER COMPARTMENT.
2. OPTICS - PRECISION MOLDED ACRYLIC LENS WITH TYPE II, III, OR IV DISTRIBUTIONS. BUG UPLIGHT RATING OF U0, WITH GLARE RATING AS DETERMINED BY LIGHTING ZONE INSTALLED.
3. LIGHT SOURCE - SOLID STATE LEDS, 3000K CCT UON, MINIMUM 70 CRI UON, AND MINIMUM EFFICACY OF 80 LUMENS/WATT UON. INITIAL LUMEN OUTPUT AS INDICATED IN LUMINAIRE SCHEDULE.
4. DRIVER - REPLACEABLE, INTEGRAL, HIGH-EFFICIENCY DIMMABLE DRIVER WITH MINIMUM0.9 PF, OPERATING VOLTAGE OF 120-277V, THERMAL MANAGEMENT, AND < 20% THD. ON-OFF CONTROL AND FULLY DIMMABLE DOWN TO 10% MINIMUM OR AS INDICATED IN LUMINAIRE SCHEDULE.
5. CERTIFICATION - UL LISTED FOR WET LOCATION, ROHS COMPLIANT. COMPLIES WITH IES LM79, LM80 AND TM21 TESTING STANDARDS.
6. MOUNTING - SURFACE MOUNTED WITH STAINLESS STEEL MOUNTING HARDWARE.
7. OPTIONS - VARIOUS LIGHT DISTRIBUTIONS. INTEGRAL MOTION SENSOR, PHOTOCELL, BATTERY BACK-UP.

LED WALL PACK

REVISED:	NOVEMBER 2020	LUMINAIRE PLATE:	XL-10

LUMINAIRE TYPE: C

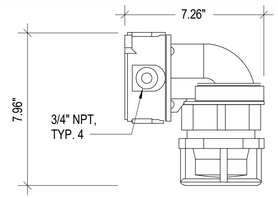

NOTE: THIS SKETCH IS A NON-PROPRIETARY GRAPHIC REPRESENTATION OF A LUMINAIRE THAT MAY MEET THE SPECIFICATION REQUIREMENTS. IT IS NOT INTENDED TO INDICATE A CERTAIN MANUFACTURER OR PREFERENCE.

LUMINAIRE REQUIREMENTS:

1. HOUSING - CORROSION RESISTANT, HIGH STRENGTH 30% GLASS-FILLED THERMOSET POLYESTER BODY.
2. OPTICS - LEXAN® / LENS.
3. LIGHT SOURCE - SOLID STATE LEDS, UTILIZING INVERTED CONE DESIGN TO PROVIDE FULL 360° COVERAGE. AMBER IN COLOR WITH FLASH RATE OF 7 MICRO FLASHES EVERY SECOND.
4. DRIVER - REPLACEABLE, INTEGRAL, HIGH-EFFICIENCY DRIVER WITH MINIMUM 0.9 PF, OPERATING VOLTAGE OF 120V, THERMAL MANAGEMENT, AND < 20% THD. ON/OFF CONTROL.
5. CERTIFICATION - UL LISTED FOR WET LOCATION, NEMA 4X, UL 1598, UL 1598A, UL 844, UL 1638, ROHS COMPLIANT. DLC QUALIFIED. COMPLIES WITH IES LM79, LM80 AND TM21 TESTING STANDARDS.
6. MOUNTING - WALL SURFACE MOUNTED.
7. OPTIONS - LENS GUARD, AMBIENT TEMPERATURE OPERATING RANGE OF -40°C TO 40°C.

NON-METALLIC CORROSION RESISTANT SIGNAL LIGHT

		LIGHTING PLATE:	LP-1

LUMINAIRE TYPE: X

NOTE: THIS SKETCH IS A NON-PROPRIETARY GRAPHIC REPRESENTATION OF A LUMINAIRE THAT MAY MEET THE SPECIFICATION REQUIREMENTS. IT IS NOT INTENDED TO INDICATE A CERTAIN MANUFACTURER OR PREFERENCE.

LUMINAIRE REQUIREMENTS:

1. HOUSING - DIE-CAST ALUMINUM OR HIGH-IMPACT, UV-STABILIZED, INJECTION-MOLDED THERMOPLASTIC.
2. LIGHT SOURCE - SOLID STATE LEDS.
3. TWIN LED LAMP HEADS OPERATE IN EMERGENCY MODE WITH 12 SERIES-PARALLEL WHITE LEDS IN EACH HEAD.
4. DRIVER - INTEGRAL, HIGH-EFFICIENCY DRIVER WITH MINIMUM 0.9 PF, OPERATING VOLTAGE OF 120/277V, THERMAL MANAGEMENT, AND < 20% THD.
5. CERTIFICATION - NFPA 101, UL LISTED FOR DAMP OR WET LOCATION, AND ROHS COMPLIANT.
6. MOUNTING - SURFACE MOUNTED ON CEILING AND/OR WALL.
7. OPTIONS - RED OR GREEN LETTERING, ONE- OR TWO-SIDED. ELU REMOTE HEAD CAPABILITIES. BATTERY BACKUP.

LED EXIT LIGHT COMBO

		LIGHTING PLATE:	LP-2

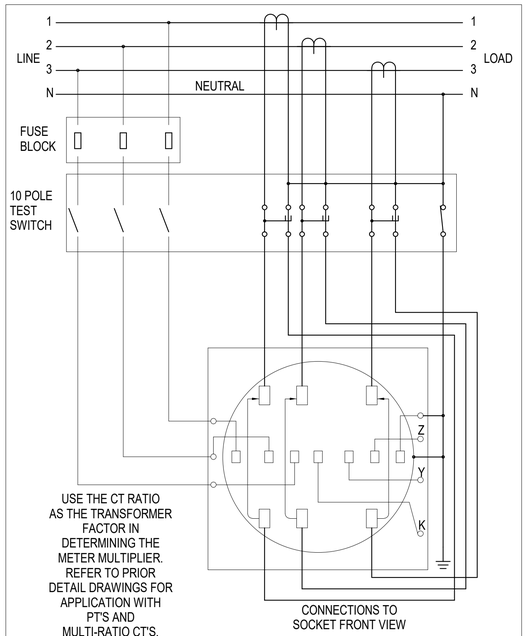

FORM 9S - BASIC WYE CONFIGURATION WITH 10 POLE TEST SWITCH

REVISED:	21 AUGUST 2007	METER PLATE	E-M104

A2 TYPICAL MULTIPLE OCCUPANCY SENSOR DETAIL

NOT TO SCALE

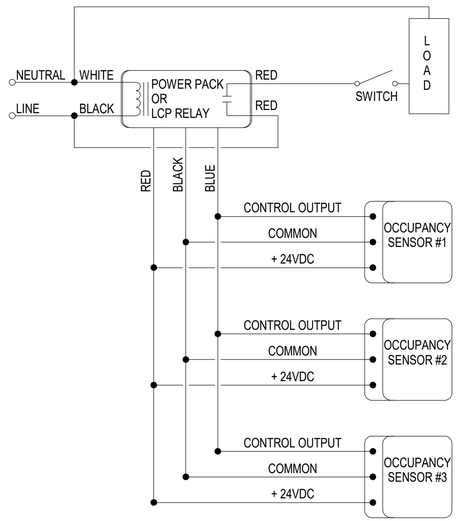

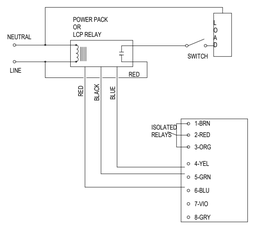

WIRE DIAGRAM

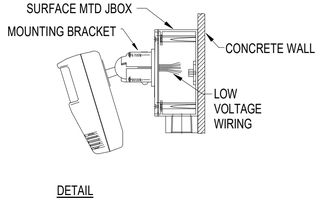

DETAIL

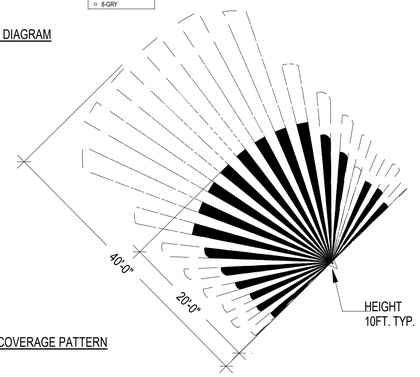

COVERAGE PATTERN

REQUIREMENTS:

1. PIR TECHNOLOGY MUST UTILIZE A TEMPERATURE COMPENSATED, DUAL ELEMENT SENSOR AND A MULTI-ELEMENT FRENSEL LENS (POLY IR4 MATERIAL).
2. SENSOR MUST UTILIZE TECHNOLOGY TO OPTIMIZE AUTOMATIC TIME DELAY TO FIT OCCUPANT USAGE PATTERNS BY DIP SWITCH.
3. LINE VOLTAGE SENSORS MUST HAVE NO MINIMUM LOAD REQUIREMENT AND BE CAPABLE OF SWITCHING 0 TO 800W AT 120VAC, 50/60 HZ AND 0 TO 1200W AT 277VAC, 50/60 HZ. CONTROL VOLTAGE SENSORS MUST NOT EXCEED A MAXIMUM LOAD REQUIREMENT OF 20mA AT 24VDC.
4. SENSOR MUST HAVE AUTOMATIC-ON OR MANUAL OPERATION ADJUSTABLE WITH DIP SWITCH.
5. SENSOR MUST HAVE TIME DELAY OF 5 TO 30 MINUTES, IN INCREMENTS OF 5 MINUTES, WITH HAVE WALK THROUGH AND TEST MODE SET BY DIP SWITCH.
6. SENSOR MUST BE CAPABLE OF DETECTION OF OCCUPANCY AT DESKTOP LEVEL UP TO 300 SQ. FT. AND GROSS MOTION UP TO 1600 SQ. FT. WITH A FIELD VIEW OF 180 DEGREES.
7. SENSOR MUST PROVIDE HIGH IMMUNITY TO FALSE TRIGGERING FROM RFI AND EMI.
8. SENSOR MUST HAVE A LED INDICATOR THAT REMAINS ACTIVE DURING OCCUPANCY.
9. SENSOR MUST HAVE A BUILT-IN LIGHT LEVEL SENSOR THAT IS OPERATIONAL FROM 8 TO 180 FOOT-CANDLES.
10. SENSOR COVERAGE MUST BE TESTED TO CURRENT NEMA WD 7 STANDARDS.
11. SENSOR MUST HAVE A STANDARD FIVE YEAR WARRANTY AND MUST BE UL LISTED.
12. SENSOR MUST HAVE NO LEAKAGE CURRENT TO LOAD WHEN IN THE OFF MODE.

A3 TYPICAL WALL MOUNTED PIR SENSOR DETAIL

NOT TO SCALE

SYM	DESCRIPTION	DATE	APPR

NAVFAC

SEAL

A/E INFO

APPROVED

FOR COMMANDER NAVFAC

ACTIVITY
Approved by LCDR VINCE DEL GRECO, RO/CO with PWD YORKTOWN, via Email.

SATISFACTORY TO DATE 03/26/2026

DES CPO | DRW CPO | CHK JDJ

PM/DM MME/WJW

BRANCH MANAGER WRB

CHIEF ENG/ARCH JWJ

FIRE PROTECTION HPN

DEPARTMENT OF THE NAVY
NAVAL FACILITIES ENGINEERING SYSTEMS COMMAND
MIDLANT DC CORE

NAVAL FACILITIES ENGINEERING SYSTEMS COMMAND - MID-ATLANTIC
NAVAL STATION - NORFOLK, VA

NAVAL WEAPONS STATION
YORKTOWN, VIRGINIA
P171 WEAPON MAGAZINES
FORKLIFT CHARGING STATION

ELECTRICAL DETAILS

SCALE: AS NOTED

EPROJECT NO.: 1737010

CONSTR. CONTR. NO.

NAVFAC DRAWING NO.
12942186

SHEET 496 OF 499

E-501B

DRAWFORM REVISION: 25 AUGUST 2020

4/1/2026 1:08:50 PM E-501B
C:\Revit Local Files\P171-1737010-E-R21-CHRG_clayton.obrien.rvt

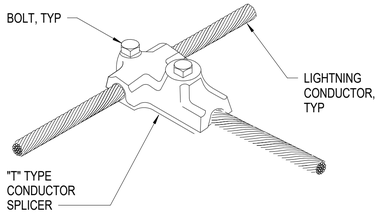

NOTE: 4-WAY SIMILAR

D2 LIGHTNING PROTECTION SYSTEM "T" CABLE SPLICE DETAIL

NOT TO SCALE

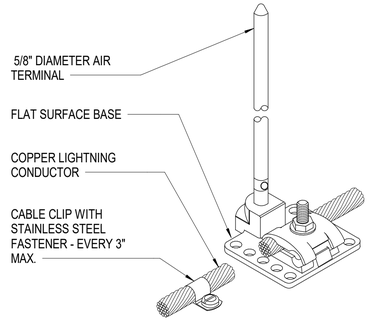

D3 AIR TERMINAL DETAIL "B"

NOT TO SCALE

GENERAL NOTE:

A. DO NOT PLACE COPPER LIGHTNING PROTECTION MATERIALS ON ALUMINUM, GALVANIZED STEEL, GALVALUME SURFACES OR ANY OTHER DISSIMILAR METAL SURFACES. (PAINTED OR NOT) NOR PLACE ALUMINUM MATERIALS ON COPPER SURFACES.

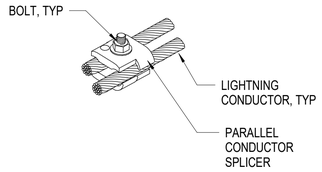

C2 LIGHTNING PROTECTION PARALLEL SPLICE DETAIL

NOT TO SCALE

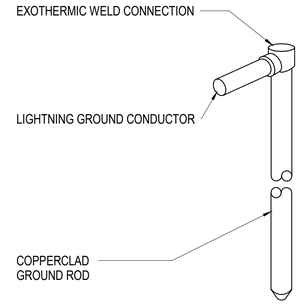

C3 GROUND ROD DETAIL

NOT TO SCALE

FASTEN CONDUCTORS WITH COPPER STANDING SEAM METAL ROOF FASTENER. FASTEN ALUMINUM CONDUCTORS WITH ALUMINUM STANDING SEAM METAL ROOF FASTENER. LIGHTNING PROTECTION CONDUCTORS MUST BE FASTENED AT INTERVALS NOT MORE THAN 36" O.C.

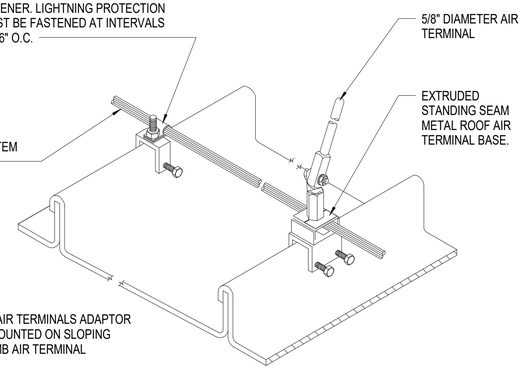

NOTE:
PROVIDE SWIVEL AIR TERMINALS ADAPTOR WHERE BASE IS MOUNTED ON SLOPING SURFACE TO PLUMB AIR TERMINAL

C4 AIR TERMINAL DETAIL "A"

NOT TO SCALE

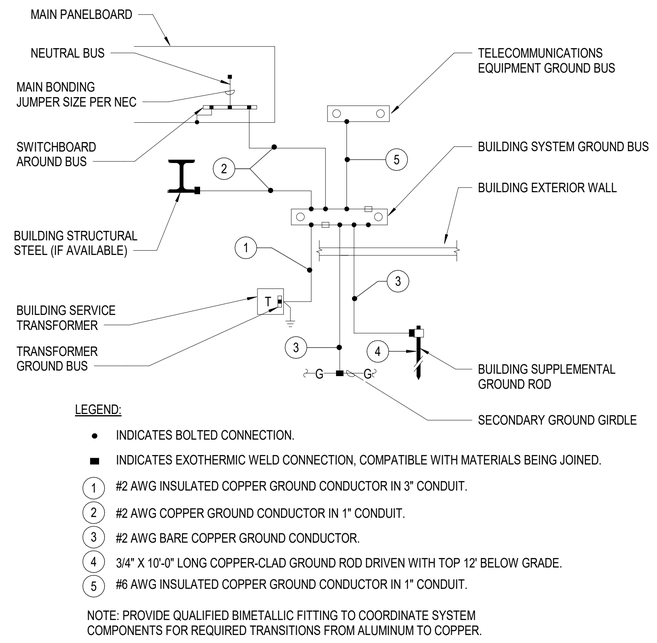

LEGEND:

- ● INDICATES BOLTED CONNECTION.
- ■ INDICATES EXOTHERMIC WELD CONNECTION, COMPATIBLE WITH MATERIALS BEING JOINED.
- (1) #2 AWG INSULATED COPPER GROUND CONDUCTOR IN 3" CONDUIT.
- (2) #2 AWG COPPER GROUND CONDUCTOR IN 1" CONDUIT.
- (3) #2 AWG BARE COPPER GROUND CONDUCTOR.
- (4) 3/4" X 10'-0" LONG COPPER-CLAD GROUND ROD DRIVEN WITH TOP 12' BELOW GRADE.
- (5) #6 AWG INSULATED COPPER GROUND CONDUCTOR IN 1" CONDUIT.

NOTE: PROVIDE QUALIFIED BIMETALLIC FITTING TO COORDINATE SYSTEM COMPONENTS FOR REQUIRED TRANSITIONS FROM ALUMINUM TO COPPER.

A2 BUILDING GROUNDING ELECTRODE SYSTEM

NOT TO SCALE

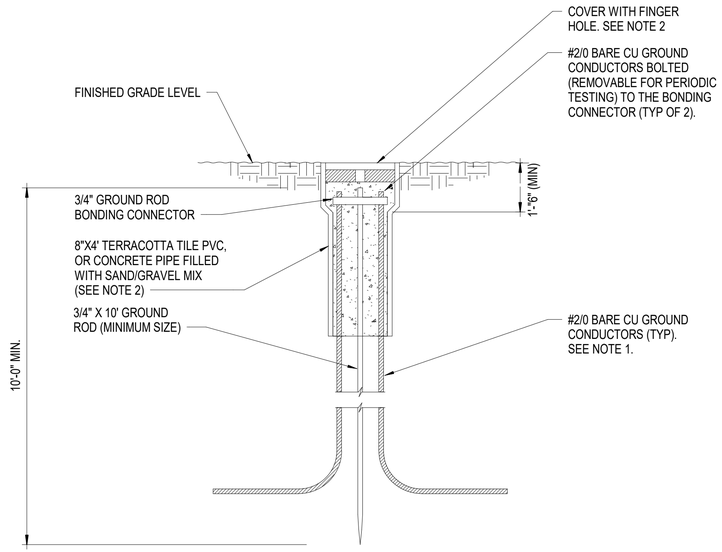

NOTES:

1. MAINTAIN THE GROUND CONDUCTORS ISOLATED FROM THE GROUND ROD UNTIL THE BOND CONNECTION AT THE TOP.
2. PROVIDE "TRAFFIC RATED" TEST WELL AND COVER FRO PAVED AREAS.

A4 GROUND TEST WELL

NOT TO SCALE

SYM	DESCRIPTION	DATE	APPR

NAVFAC

SEAL

A/E INFO

APPROVED

FOR COMMANDER NAVFAC

ACTIVITY: Approved by LCDR VINCE DEL GRECO, ROIOC with PWD YORKTOWN, via Email.

SATISFACTORY TO DATE: 03/26/2026

DES	CPO	DRW	CPO	CHK	JDU

PM/DM	MME/WJW
BRANCH MANAGER	WRB
CHIEF ENG/ARCH	JWJ
FIRE PROTECTION	HPN

DEPARTMENT OF THE NAVY
NAVAL FACILITIES ENGINEERING SYSTEMS COMMAND
MIDLANT DC CORE
NAVAL FACILITIES ENGINEERING SYSTEMS COMMAND - MID-ATLANTIC
NAVAL STATION - NORFOLK, VA
NAVAL WEAPONS STATION
YORKTOWN, VIRGINIA
P171 WEAPON MAGAZINES
FORKLIFT CHARGING STATION
ELECTRICAL DETAILS

SCALE:	AS NOTED
EPROJECT NO.:	1737010
CONSTR. CONTR. NO.	
NAVFAC DRAWING NO.	12942187
SHEET	497 OF 499

E-502B

DRAWFORM REVISION: 25 AUGUST 2020

4/1/2026 1:08:50 PM E-502B
C:\Revit Local Files\P171-1737010-E-R21-CHRG_clayton.obrien.rvt

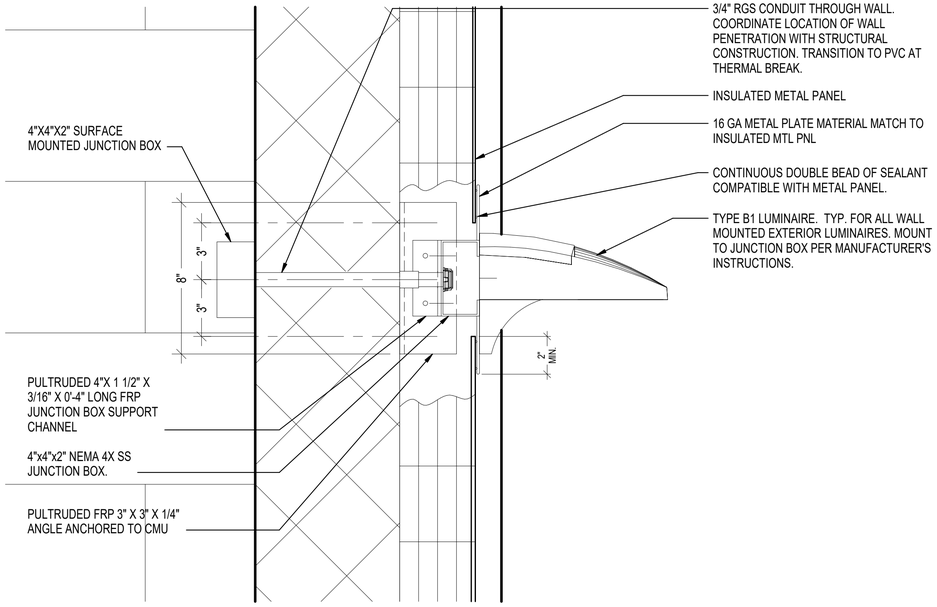

B1 TYPICAL EXTERIOR WALL MOUNTED LUMINAIRE SECTION DETAIL

3" = 1'-0" (E-101B)

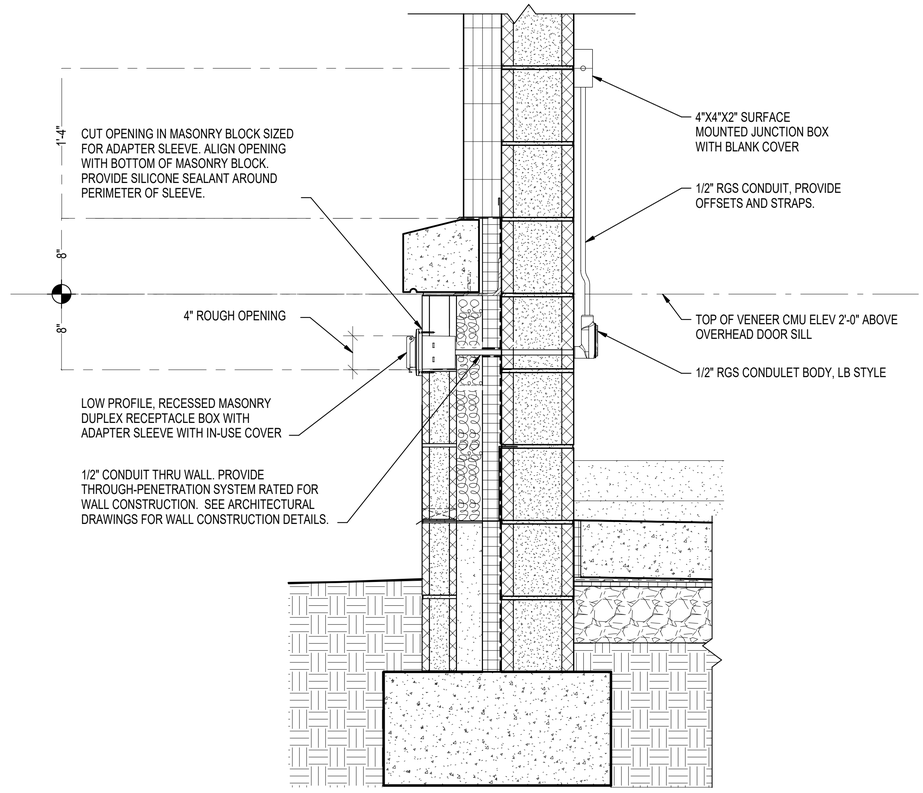

B3 TYPICAL EXTERIOR RECESSED RECEPTACLE DETAIL

1 1/2" = 1'-0" (E-102B)

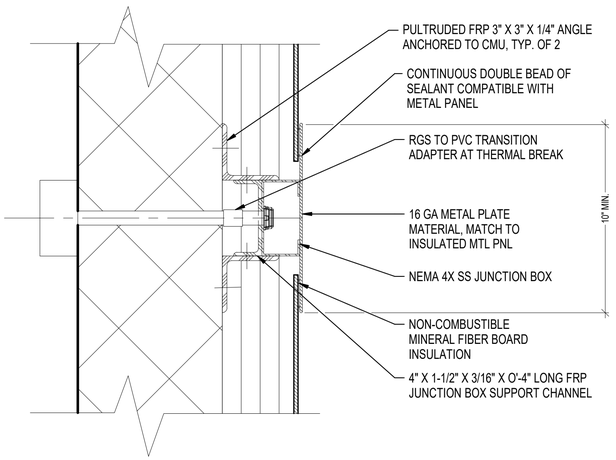

A1 TYPICAL EXTERIOR WALL MOUNTED LUMINAIRE PLAN VIEW DETAIL

3" = 1'-0" (E-101B)

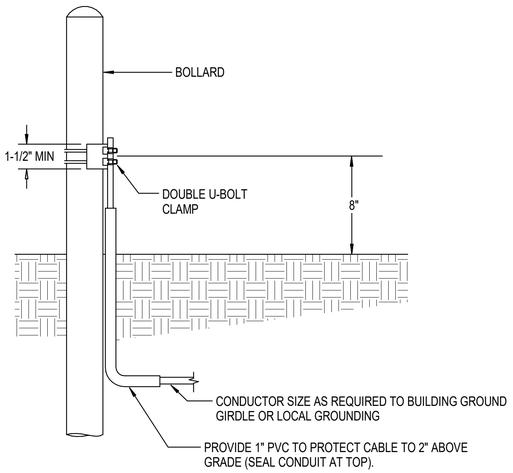

A3 TYPICAL BOLLARD GROUNDING DETAIL

NOT TO SCALE

GRAPHIC SCALE(S)

1 1/2" = 1' - 0" 0 3" 6" 9" 1' 2'

3" = 1' - 0" 0 3" 6" 1'

SYM	DESCRIPTION	DATE	APPR

SEAL

A/E INFO

APPROVED

FOR COMMANDER NAVFAC

ACTIVITY
Approved by LCDR VINCE DEL GRECO, ROIOC with PWD YORKTOWN, via Email.

SATISFACTORY TO DATE	03/26/2026
DES CPO DRW CPO CHK JDU	
PM/DM	MME/WJW
BRANCH MANAGER	WRB
CHIEF ENG/ARCH	JWJ
FIRE PROTECTION	HPN

DEPARTMENT OF THE NAVY
NAVAL FACILITIES ENGINEERING SYSTEMS COMMAND
MIDLANT DC CORE

NAVAL FACILITIES ENGINEERING SYSTEMS COMMAND - MID-ATLANTIC
NAVAL STATION - NORFOLK, VA

NAVAL WEAPONS STATION YORKTOWN, VIRGINIA
P171 WEAPON MAGAZINES
FORKLIFT CHARGING STATION

ELECTRICAL DETAILS

SCALE:	AS NOTED
EPROJECT NO.:	1737010
CONSTR. CONTR. NO.	
NAVFAC DRAWING NO.	12942188
SHEET	498 OF 499

E-503B

DRAWFORM REVISION: 25 AUGUST 2020

4/1/2026 1:08:50 PM E-503B
C:\Revit Local Files\P171-1737010-E-R21-CHRG_clayton.obrien.rvt

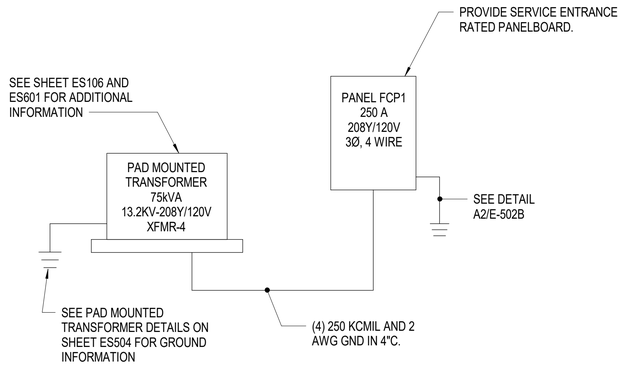

C1 POWER RISER DIAGRAM

NOT TO SCALE

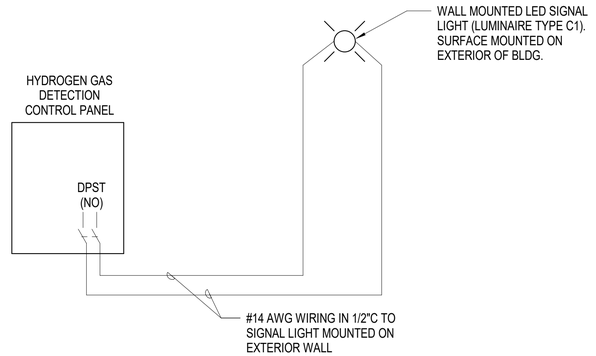

B1 GAS DETECTION SYSTEM REMOTE WARNING SIGNAL

NOT TO SCALE

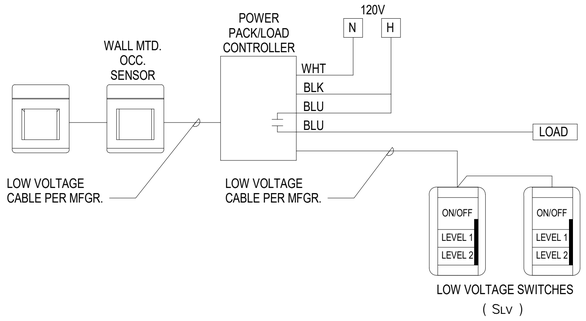

A1 TYPICAL POWER PACK/LOAD CONTROLLER - INTERIOR MOUNTED LIGHTING

NOT TO SCALE

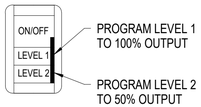

A3 TYPICAL LOW VOLTAGE SWITCH DETAIL

NOT TO SCALE

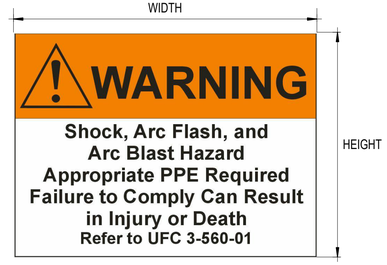

NOTES:

1. PROVIDE SELF-ADHESIVE VINYL LABEL TO AFFIX TO ELECTRICAL EQUIPMENT TO WARN OF ARC FLASH HAZARDS.
2. THE LABEL FORMAT AND TEXT SHALL BE IN ACCORDANCE WITH THE FIGURE.
3. THE LABEL SHALL BE LOCATED ON THE EQUIPMENT TO BE CLEARLY VISIBLE TO QUALIFIED PERSONS BEFORE EXAMINATION, ADJUSTMENT, SERVICING, OR MAINTENANCE OF THE EQUIPMENT.
4. THE SIZE OF THE LABEL SHALL BE MINIMUM:

EQUIPMENT TYPE	HEIGHT	WIDTH
INDOOR	2"	3"
OUTDOOR	3"	4.5"

5. A DOWNLOADABLE WINDOWS METAFILE IS AVAILABLE ON THE WHOLE BUILDING DESIGN GUIDE WEBSITE (WWW.WDBG.ORG) FOR USE IN A LABEL MAKING MACHINE.

   A. THE FILE IS LOCATED ON THE "NAVFAC CADD DETAILS" PAGE. TO NAVIGATE TO THIS LOCATION, FOLLOW: HOME > DOCUMENTS & REFERENCES > CCB > CADD LIBRARY > NAVFAC CADD RESOURCES > NAVFAC CADD DETAILS.

   B. ALTERNATIVELY, TYPE IN THE FOLLOWING ADDRESS IN INTERNET EXPLORER: HTTP://WWW.WBDG.ORG/CCB/BROWSE_CAT.PHP?C=23

GENERAL ARC FLASH WARNING LABEL

SKETCH DATE	APRIL 2015	STYLE	AF-1

PANEL FCP1 SCHEDULE (SEE PANEL NOTE 3)

250 AMP BUS 250 A MCB 208/120 Wye VOLTS 3PH, 4W, SN, 60HZ MIN. 22 KAIC SURFACE, SE RATED

CKT NO.	LOAD DESCRIPTION	COND SIZE	WIRE SIZE	BKR TRIP	A	B	C	A	B	C	BKR TRIP	WIRE SIZE	COND SIZE	LOAD DESCRIPTION	CKT NO.
1					43.7 A			2.5 A							2
3	CHARGER #1	1"	6	60		43.7 A			2.5 A		20	12	3/4"	OVERHEAD DOOR #1 1/2 HP (SEE PANEL NOTE 1)	4
5							43.7 A			2.5 A					6
7					43.7 A			2.5 A							8
9	CHARGER #2	1"	6	60		43.7 A			2.5 A		20	12	3/4"	OVERHEAD DOOR #2 1/2 HP (SEE PANEL NOTE 1)	10
11							43.7 A			2.5 A					12
13					43.7 A			2.5 A							14
15	CHARGER #3	1"	6	60		43.7 A			2.5 A		20	12	3/4"	OVERHEAD DOOR #3 1/2 HP (SEE PANEL NOTE 1)	16
17							43.7 A			2.5 A					18
19	EF-1	3/4"	12	20	1.0 A			20.8 A							20
21						1.0 A			20.8 A		30	10	3/4"	EUH-1 (7.5KW UNIT HEATER)	22
23	EF-2	3/4"	12	20			1.3 A			20.8 A					24
25	EUH-1 (7.5KW UNIT HEATER)	3/4"	10	30	20.8 A			0.0 A			20	--	--	SPARE	26
27						20.8 A			3.0 A		20	12	3/4"	RECEPT - TELECOM	28
29							20.8 A			3.0 A	20	12	3/4"	HYDROGEN DECT - NOTE 2	30
31	LIGHTING - RM 101	3/4"	12	20	2.7 A			9.0 A			20	10	3/4"	RECEPTS - RM 101	32
33	SPARE	--	--	20		0.0 A			0.7 A		20	12	3/4"	LIGHTING - EXTERIOR	34
35	SPARE	--	--	20			0.0 A			0.0 A	20	--	--	SPARE	36
37					2.3 A			--			--	--	--	SPACE	38
39	SPD	3/4"	10	30		2.3 A			--		--	--	--	SPACE	40
41							2.3 A			--	--	--	--	SPACE	42
	TOTAL CONNECTED AMPS:				A: 195.2			B: 187.2			C: 187.0				

PANEL NOTE(S):

1. COORDINATE OVERHEAD DOOR MOTOR SIZE AND POWER CONNECTION PRIOR TO INSTALLATION. INSTALL PER MANUFACTURE'S RECOMMENDATIONS.
2. COORDINATE POWER REQUIREMENTS WITH HYDROGEN DETECTION SYSTEM CONTRACTOR.
3. PROVIDE PANEL WITH 100% RATED MCB.

LUMINAIRE SCHEDULE

LUMINAIRE TYPE	PLATE	LAMP TYPE	LUMENS	VOLTAGE	MOUNTING	NOTES
A1	NL-22	LED	6000	120 V	SUSPENDED	1, 3
B1	XL-10	LED	2159	120 V	WALL MOUNTED AT 12'-4" AFG	2, 3, 4
C1	LP-1	LED	N/A	120 V	WALL MOUNTED AT 12'-4" AFG	
X	LP-2	LED	N/A	120 V	WALL MOUNTED AT 8'-0" AFF	

LUMINAIRE SCHEDULE NOTES:

1. SEE SHEET E-101A FOR LUMINIARIE MOUNTING HEIGHTS.
2. PROVIDE LUMINAIRE WITH INTEGRAL MOTION SENSOR/PHOTOCELL.
3. WHEN LUMINAIRE IS SHOWN AS "EMERGENCY" LUMINAIRE, PROVIDE FIXTURE WITH BATTERY BACK-UP.
4. PROVIDE LUMINAIRE WITH TYPE III DISTRIBUTION.

CONTROL STRATEGIES

SPACE	CONTROL STRATEGY	DESCRIPTION
FORKLIFT CHARGING 101	MANUAL ON/STEP DIM/VACANCY OFF	OCCUPANT MANUALLY TURNS THE LIGHTS ON UPON ENTERING THE SPACE. OCCUPANT CAN MANUALLY DIM OR SWITCH THE LUMINAIRES TO 50% OF FULL LIGHT OUTPUT. UPON SENSING VACANCY, THE LUMINAIRES SWITCH OFF. INITIAL TIME DELAY OF VACANCY SENSORS WILL BE SET TO 15 MINUTES.
EXTERIOR LIGHTING	PHOTOSENSOR ON / MOTION DETECTION ON/OFF / PHOTSENSOR OFF.	AT SUNSET OR SHORTLY AFTER, THE LIGHTS AUTOMATICALLY TURN ON. AT SUNRISE OR SHORTLY BEFORE, THE LIGHTS AUTOMATICALLY TURN OFF. BETWEEN SUNSET AND SUNRISE, THE MOTION DETECTOR WILL TURN OFF LIGHTS AFTER 15 MINUTES OF NO MOTION DETECTION AND TURN ON LIGHTS TO 100% OUTPUT UPON DETECTION OF MOTION. IN THE EVENT OF PHOTOSENSOR FAILURE, THE LIGHTS WILL REMAIN ON.

SYM	DESCRIPTION	DATE	APPR

SEAL

A/E INFO

APPROVED

FOR COMMANDER NAVFAC

ACTIVITY
Approved by LCDR VINCE DEL GRECO, ROICC with PWD YORKTOWN, via Email.

SATISFACTORY TO DATE 03/26/2026

DES	CPO	DRW	CPO	CHK	JDU

PM/DM MME/WJW
BRANCH MANAGER WRB
CHIEF ENG/ARCH JWJ
FIRE PROTECTION HPN

DEPARTMENT OF THE NAVY
NAVAL FACILITIES ENGINEERING SYSTEMS COMMAND
MIDLANT DC CORE
NAVAL FACILITIES ENGINEERING SYSTEMS COMMAND - MID-ATLANTIC
NAVAL STATION - NORFOLK, VA
NAVAL WEAPONS STATION YORKTOWN, VIRGINIA
P171 WEAPON MAGAZINES
FORKLIFT CHARGING STATION
SCHEDULES

SCALE: AS NOTED
EPROJECT NO.: 1737010
CONSTR. CONTR. NO.
NAVFAC DRAWING NO. 12942189
SHEET 499 OF 499

E-601B

DRAWFORM REVISION: 25 AUGUST 2020

4/1/2026 1:08:51 PM E-601B
C:\Revit Local Files\P171-1737010-E-R21-CHRG_dayton.obrien.rvt