SPECIAL PACKAGING INSTRUCTION

CODE ID	SPI NO. (TPO)
98747	F00-432-5558
	SHEET 1 OF 6

PART OR DRAWING NO.	NATIONAL STOCK NO.	CURRENT REV
976768-1	2835-00-432-5558 RP	F

ITEM NOMENCLATURE
CASE, DIFFUSER, NONAIRCRAFT GAS TURBINE ENGINE

ORIGINAL DATE
71364

ILL. K. KNIGHTON
P.S. W. MONSON
CHK. D. GIBSON
AUTH. J. BURLEIGH

MILITARY PRESERVATION IAW MIL-STD-2073-1

SERVICEABLE METHOD: 10
UNSERVICEABLE METHOD: 10
QUP 001
ICQ 000
CLEANING & DRYING: IAW MIL-STD-2073-1
PRESERVATIVE: N/A

MARKING IAW MIL-STD-129

SPECIAL MARKINGS:
A) SPI NO. F00-432-5558
MARK THE SPI NUMBER ON THE IDENTIFICATION SIDE OF CONTAINER.

B) REUSABLE CONTAINER & DUNNAGE DO NOT DESTROY.

CLOSURE

LEVEL A: IAW: ASTM D6251
LEVEL B: IAW: THIS INSTRUCTION

PACKING AS SPECIFIED BELOW AND BILL OF MATERIALS

LEVEL	SPEC	STYLE	TYPE	CL	VRTY	GR	TR
A	ASTM D6251	A	III	2			B
B	ASTM D5118	RSC				V3c	

	LEVEL A	LEVEL B
GROSS CU FT	3.083	1.785
GROSS WT LBS	40	20
DESIGN FRAGILITY G	100	100

	LENGTH	WIDTH	DEPTH
CNTR I.D.			
LEVEL A:	21 3/4	21 3/4	7
LEVEL B:	21	21	6
CNTR O.D.			
LEVEL A:	24	24	9 1/4
LEVEL B:	21 3/8	21 3/8	6 3/4
ITEM DIM	18 1/4	18 1/4	4
ITEM WT.	18 LBS		

REVISIONS

LTR	DESCRIPTION	DATE
F	UPDATED DIMENSIONS AND FORM	23171

CONTROLLED BY: 406 SCMS
CONTROLLED BY: GULAA-HILL AFB
CONTROLLED BY: CUI/SP-CTI
DISTRIBUTION/DISSEMINATION CONTROL: FEDCON
POC: 406SCMS.GULAA.CONTRACTSHILL@US.AF.MIL

SPI NO. F00-432-5558

SPECIAL PACKAGING INSTRUCTION	CODE ID 98747	SPI NO. (TPO) F00-432-5558
ITEM NOMENCLATURE CASE, DIFFUSER, NONAIRCRAFT GAS TURBINE ENGINE		SHEET 2 OF 6

P/N	QTY REQD	NOMENCLATURE OR DESCRIPTION	SIZE: (INCHES UNLESS SPECIFIED) TOLERANCES ON FRAC. ± ⅛, DECIMAL ± .10, ANGLES ± 1°	MATERIAL SPECIFICATION
-5	A/R	TAPE, PACKAGING	3 X AS REQUIRED	ASTM D5486 TYPE I OR V
-4	1	PAD, TOP	21 X 21 X 15/16	ASTM D4727 CF, DOM, SW, GRADE 200 1 B
-3	A/R	TAPE, MASKING	1 X AS REQUIRED	ASTM D6123 TYPE I OR II
-2	1	WRAP	50 X 25	ASTM D3174 TYPE I, CLASS 1, GRADE A, FIN. 1
-1	1	PAD, BOTTOM	21 X 21 X 1 7/8	ASTM D4727 CF, DOM, SW, GRADE 200 1 A

SPECIAL PACKAGING INSTRUCTION	CODE ID 98747	SPI NO. (TPO) F00-432-5558
ITEM NOMENCLATURE CASE, DIFFUSER, NONAIRCRAFT GAS TURBINE ENGINE		SHEET 3 OF 6

CAUTION NOTICES

NOTICE 1: ASSETS PACKAGED IN ACCORDANCE WITH PREVIOUS EDITIONS OF THIS SPI DO NOT REQUIRE REPACKAGING IF THE INTEGRITY OF THE SPI IS MAINTAINED.

NOTICE 2: SEE SPIRES FOR A COMPLETE LISTING OF NSN's ASSIGNED TO THIS SPI.

NOTICE 3: PACKAGING MATERIAL MAY BE SUBSTITUTED IF IT MEETS THE REQUIREMENTS OF MIL-STD-2073, PROVIDES EQUAL OR BETTER PROTECTION AND THERE IS NO INCREASED COST TO THE GOVERNMENT.

NOTICE 4: FOR LEVEL A PACKAGING REQUIREMENTS, LEVEL B PACKS SHALL BE OVERBOXED IN A LEVEL A SPECIFIED CONTAINER SHOWN ON PAGE 1 UNDER PACKAGING LEVEL A.

NOTICE 5: LEVEL A PROTECTION REQUIRED TO MEET THE MOST SEVERE WORLDWIDE SHIPMENT, HANDLING, AND STORAGE CONDITIONS. EXAMPLES OF SITUATIONS ARE: WAR RESERVE MATERIAL, MOBILIZATION, STRATEGIC AND THEATER DEPLOYMENT, OPEN STORAGE AND DECK LOADING. SECURITY ASSISTANCE ITEMS, INCLUDING FMS, ARE ESPECIALLY SUSCEPTIBLE TO DAMAGE DUE TO UNKNOWN AND UNFAVORABLE TRANSPORTATION, CLIMATIC, AND STORAGE CONDITIONS. PROVIDE LEVEL B PACKING UNLESS OTHERWISE DIRECTED BY THE PROCURING COUNTRY.

INTERNATIONAL STANDARDS FOR PHYTOSANITARY MEASURES
REVISION OF ISPM NO. 15
REVISION OF WOOD PACKAGING MATERIAL FOR INTERNATIONAL TRADE

THE FOLLOWING STATEMENT IS IN COMPLIANCE WITH THE UNITED NATIONS-IMPLEMENTED RESTRICTIONS ON WOOD PACKAGING MATERIAL (WPM). THIS REQUIREMENT IS SPECIFICALLY CONCERNED WITH INVASIVE SPECIES SUCH AS THE PINEWOOD NEMATODE. WPM IS DEFINED AS WOOD PALLETS, SKIDS, LOAD BOARDS, PALLET COLLARS, WOODEN BOXES, REELS, DUNNAGE, CRATES, FRAMES, AND CLEATS. THE STATEMENT BELOW CITES THE REQUIREMENTS IN DETAIL AND COVERS LUMBER FOR BUILDING CONTAINERS AND PALLETS USED FOR DELIVERIES, RESULTING IN SHIPMENTS WORLDWIDE (DIRECT, OR THROUGH AIR LOGISTICS CENTERS (ALC), CONTAINER CONSOLIDATION POINTS (CCP), OR OTHER BASES).

WOODEN LUMBER, WOODEN PALLET AND PACKAGING/CONTAINER STATEMENT:

ALL WOODEN LUMBER, WOODEN PALLETS, AND WOODEN CONTAINERS PRODUCED ENTIRELY OR IN PART OF WOOD PACKAGING MATERIAL (WPM) SHALL BE CONSTRUCTED FROM DEBARKED WOOD IN ADDITION TO THE APPLICATION OF HEAT-TREATED (HT) MATERIAL (HT TO 56 DEGREES CENTIGRADE OR 133 DEGREES FAHRENHEIT FOR 30 MINUTES). CERTIFICATION/MARKING IS REQUIRED BY AN ACCREDITED AGENCY RECOGNIZED BY THE AMERICAN LUMBER STANDARDS COMMITTEE (ALSC). FOR REFERENCE DOCUMENTATION, SEE LATEST REVISION OF "INTERNATIONAL STANDARDS FOR PHYTOSANITARY MEASURES (ISPM NO. 15), "REGULATION OF WOOD PACKAGING MATERIAL IN INTERNATIONAL TRADE."

NOTES

1. LAMINATED PADS, REF.-1 AND REF.-4 TO REQUIRED THICKNESS USING ADHESIVE CONFORMING TO A-A-59692 OR EQUAL.

SPECIAL PACKAGING INSTRUCTION	CODE ID 98747	SPI NO. (TPO) F00-432-5558
ITEM NOMENCLATURE CASE, DIFFUSER, NONAIRCRAFT GAS TURBINE ENGINE		SHEET 4 OF 6

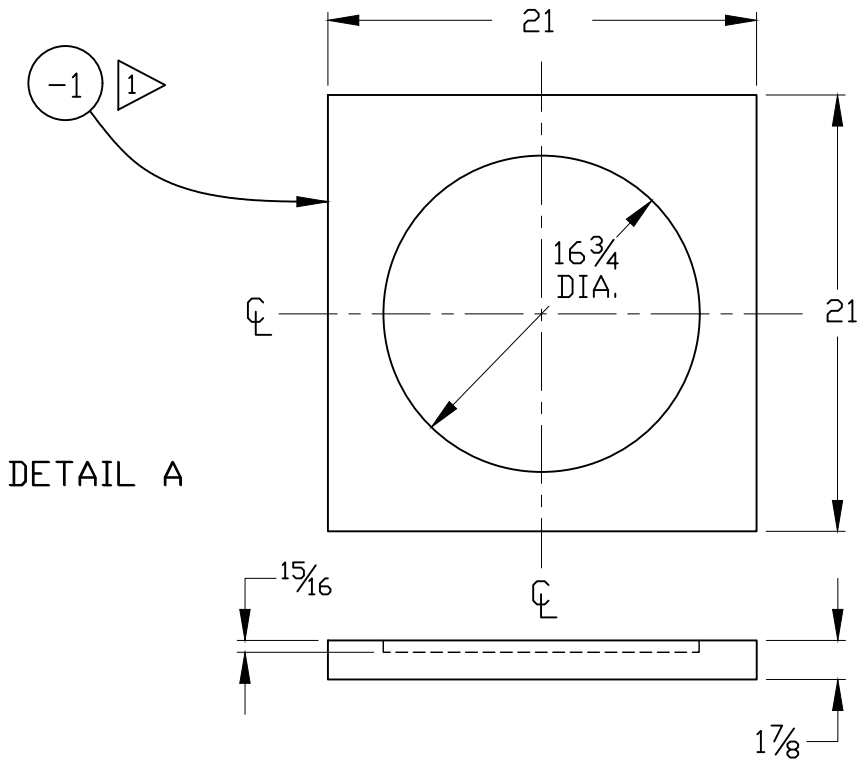

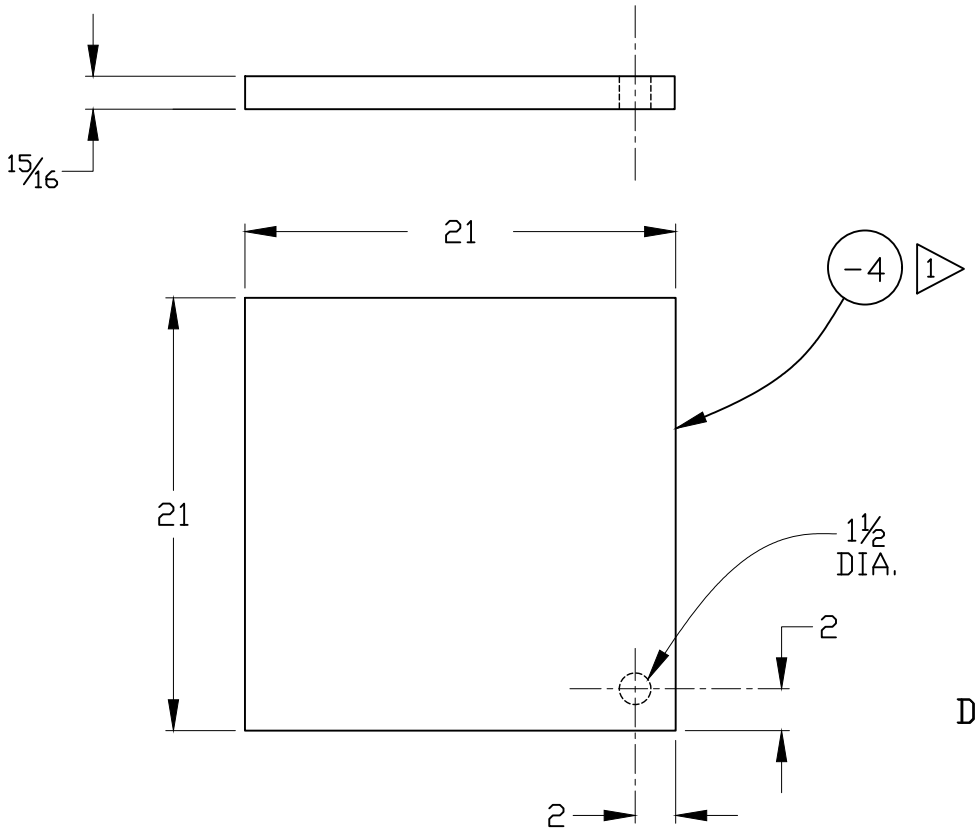

SPECIAL PACKAGING INSTRUCTION	CODE ID 98747	SPI NO. (TPO) F00-432-5558
ITEM NOMENCLATURE CASE, DIFFUSER, NONAIRCRAFT GAS TURBINE ENGINE		SHEET 5 OF 6

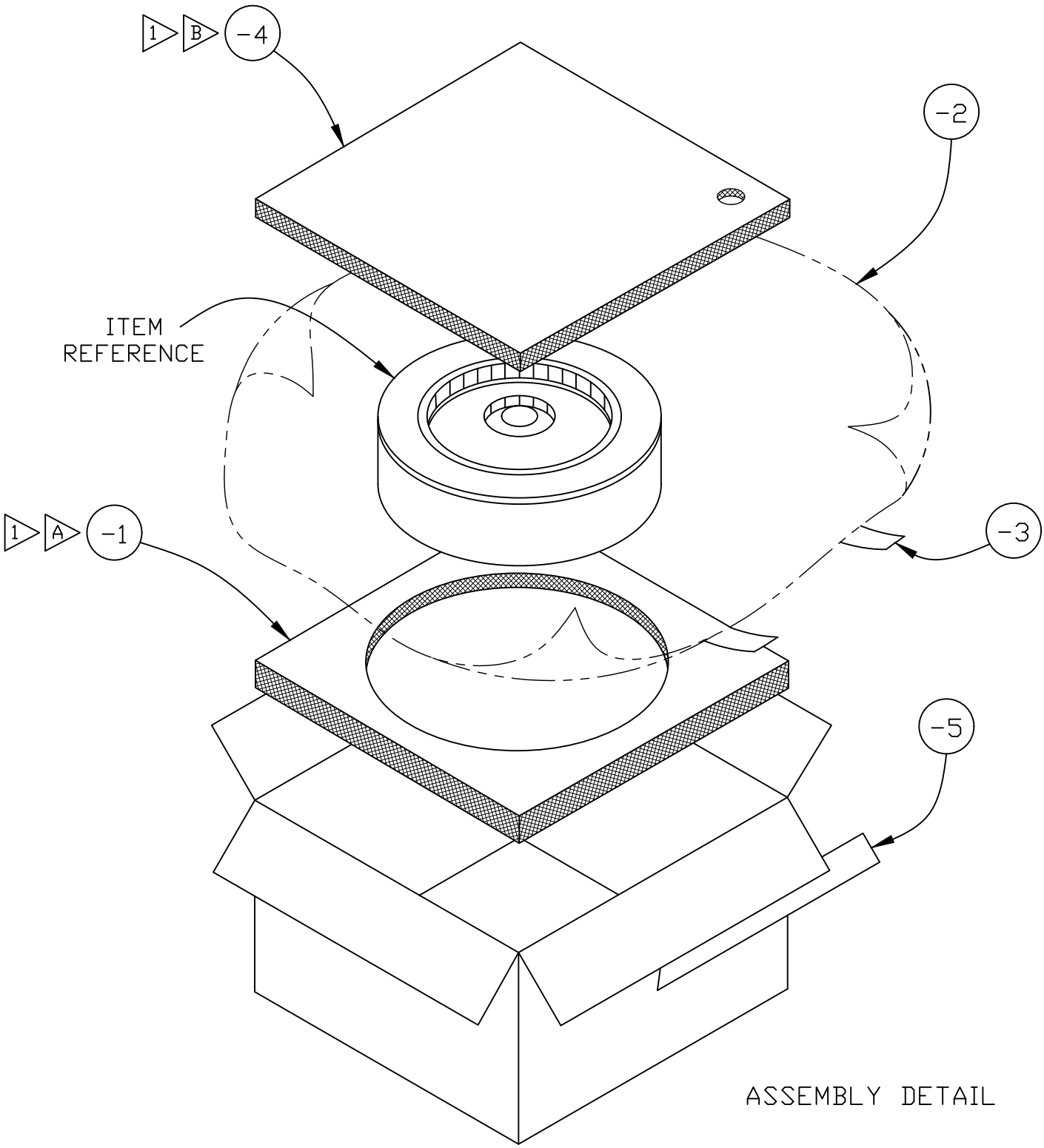

SPECIAL PACKAGING INSTRUCTION	CODE ID 98747	SPI NO. (TPO) F00-432-5558
ITEM NOMENCLATURE CASE, DIFFUSER, NONAIRCRAFT GAS TURBINE ENGINE		SHEET 6 OF 6

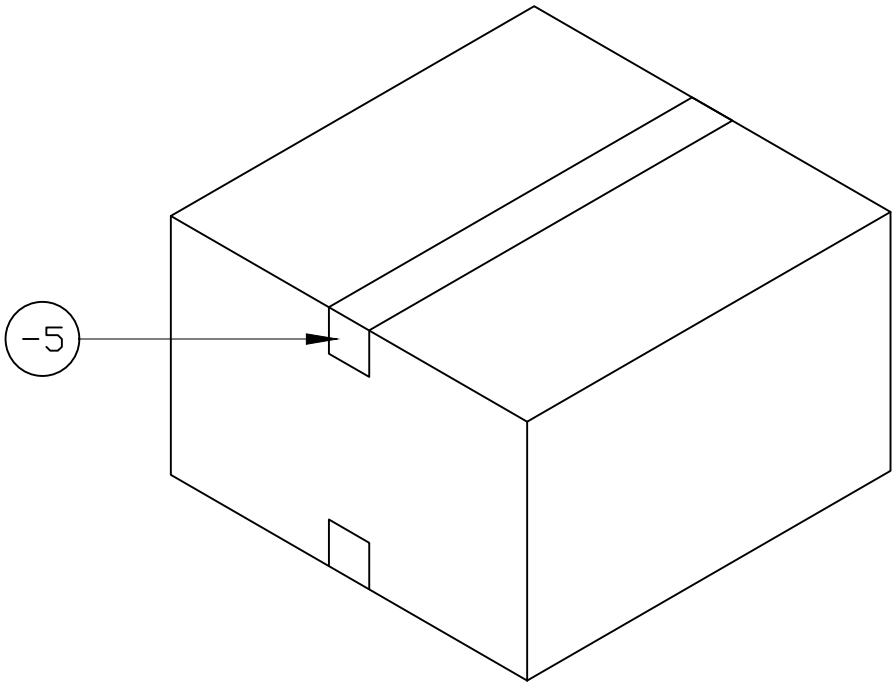

CLOSURE