SPECIAL PACKAGING INSTRUCTION

CODE ID	SPI NO. (TPO)
98747	F01-141-1064
	SHEET 1 OF 8

PART OR DRAWING NO.	NATIONAL STOCK NO.	CURRENT REV
16T7461-809	1560-01-190-9049 WF	N

ITEM NOMENCLATURE
STABILIZER, HORIZONTAL

ORIGINAL DATE
86108

ILL. K. KNIGHTON
P.S. K. RESTORFF
CHK. S. LUCERO
AUTH. J. BURLEIGH

MILITARY PRESERVATION IAW MIL-STD-2073-1

SERVICEABLE METHOD: 20
UNSERVICEABLE METHOD: 20
QUP 001
ICQ 000
CLEANING & DRYING: IAW MIL-STD-2073-1
PRESERVATIVE: MIL-PRF-16173 CODE 2 [1]
MIL-PRF-23827 [1]

MARKING IAW MIL-STD-129

SPECIAL MARKINGS:
A) SPI NO. F01-141-1064
MARK THE SPI NUMBER ON THE IDENTIFICATION SIDE OF CONTAINER.
B) REUSABLE CONTAINER & DUNNAGE DO NOT DESTROY.
D) TO OPEN, REMOVE LAG BOLTS FROM SIDES

CLOSURE

LEVEL A: IAW: ASTM D6256
LEVEL B: IAW: ASTM D6256

PACKING AS SPECIFIED BELOW AND BILL OF MATERIALS

LEVEL	SPEC	STYLE	TYPE	CL	VRTY	GR	TR
A	ASTM D6256 (MOD)	A	I	2			B
B	ASTM D6256 (MOD)	A	I	2			A

	LEVEL A	LEVEL B
GROSS CU FT	133.989	133.989
GROSS WT LBS	650	650
DESIGN FRAGILITY G	110	110

	LENGTH	WIDTH	DEPTH
CNTR I.D.			
LEVEL A:	116	19 3/4	82
LEVEL B:	116	19 3/4	82
CNTR O.D.			
LEVEL A:	118 1/4	22	89
LEVEL B:	118 1/4	22	89
ITEM DIM	108 3/4	6 1/2	76 3/4
ITEM WT.	168 LBS		

REVISIONS		
LTR	DESCRIPTION	DATE
N	CHANGED OUTSIDE DIMENSIONS. ADDED NOT 5 TO P/N 19	22293

DISTRIBUTION STATEMENT D: DISTRIBUTION AUTHORIZED TO DEPARTMENT OF DEFENSE AND U.S. DOD CONTRACTORS ONLY, ADMINISTRATIVE OR OPERATIONAL USE, 24 JULY 2018. OTHER REQUESTS FOR THIS DOCUMENT SHALL BE REFERRED TO 406 SCMS/GULAA, (PACKAGING DIVISION), HILL AFB, UTAH 84056.

DESTRUCTION NOTICE: FOLLOW THE PROCEDURES IN DOD 5220.22-M, NATIONAL INDUSTRIAL SECURITY PROGRAM OPERATING MANUAL (NISPOM), SECTION 5-705, OR DOD 5200.1-R, INFORMATION SECURITY PROGRAM, CHAPTER VI. FOR UNCLASSIFIED, LIMITED DOCUMENTS, DESTROY BY ANY METHOD THAT WILL PREVENT DISCLOSURE OF CONTENTS OR RECONSTRUCTION OF THE DOCUMENT.

SPECIAL PACKAGING INSTRUCTION

CODE ID	SPI NO. (TPO)
98747	F01-141-1064

ITEM NOMENCLATURE
STABILIZER, HORIZONTAL

P/N	QTY REQD	NOMENCLATURE OR DESCRIPTION	SIZE: (INCHES UNLESS SPECIFIED) TOLERANCES ON FRAC. ± ⅛, DECIMAL ± .10, ANGLES ± 1°	MATERIAL SPECIFICATION
-41	1	HANDLE	2 X 2 X 1/2	A-A-55057 TYPE A
-40	1	DOOR, INSPECTION	11 X 11 X 5/16	A-A-55057 TYPE A
-39	1	DADOED CLEAT	1 X 3 (NOM) X 16	ASTM D6199 CLASS 2
-38	2	DADOED CLEAT	1 X 3 (NOM) X 10	ASTM D6199 CLASS 2
-37	A/R	WASHER, FLAT	1/4	ASME B18.21.1
-36	A/R	BOLT, LAG	2 1/2 X 1/4	ASME B18.2.1
-35	2	LATERAL LAG STRIP	2 X 2 (NOM) X 16 1/2	ASTM D6199 CLASS 2 G
-34	2	LONGITUDINAL LAG STRIP	2 X 2 (NOM) X 115 3/4	ASTM D6199 CLASS 2 G
-33	4	VERTICAL LAG STRIP	2 X 2 (NOM) X 78 3/4	ASTM D6199 CLASS 2 G
-32	A/R	WASHER, TORQUE	3/8	LOCAL PURCHASE D E F
-31	4	BOLT, CARRIAGE	4 X 3/8	ASME B18.5 E
-30	1	AFT HOLD DOWN	19 1/2 X 6 X 3/4	A-A-55057 TYPE A F
-29	2	HOLD DOWN SUPPORT BLOCK	2 X 8 (NOM) X 18	ASTM D6199 CLASS 2 E
-28	2	CENTER HOLD DOWN	19 1/2 X 18 X 3/4	A-A-55057 TYPE A E
-27	1	FORWARD HOLD DOWN	26 1/2 X 19 1/2 X 3/4	A-A-55057 TYPE A D
-26	1	SHROUD	AS REQUIRED	A-A-3174 TYPE I, CL. 1, GR. A, FIN. 1 3
-25	A/R	CUSHION, FELT	1/4 X AS REQUIRED	ASTM D2475 2 C D E F
-24	6	BOLT, CARRIAGE	1 X 3/8	ASME B18.5
-23	2	HORIZONTAL SUPPORT	48 X 2 1/4 X 1 1/2	MIL-S-21041 UNIT A, TY 2, CL. 3
-22	2	AFT VERTICAL SUPPORT	83 X 2 1/4 X 1 1/2	MIL-S-21041 UNIT A, TY 2, CL. 3
-21	2	CTR VERTICAL SUPPORT	72 X 2 1/4 X 1 1/2	MIL-S-21041 UNIT A, TY 2, CL. 3 E
-20	2	FWD VERTICAL SUPPORT	48 X 2 1/4 X 1 1/2	MIL-S-21041 UNIT A, TY 2, CL. 3 D
-19	4	SADDLE SUPPORT	2 X 4 (NOM) X 12	ASTM D6199 CLASS 2 5 C
-18	1	SADDLE	73 1/4 X 15 3/4 X 1 1/2	A-A-55057 TYPE A 3 C
-17	A/R	WASHER, LOCK	3/8	ASME B18.21.1 A B
-16	A/R	BOLT, CARRIAGE	2 1/2 X 3/8	ASME B18.5 A B F
-15	4	PLATFORM SUPPORT	12 X 2 1/4 X 1 1/2	MIL-S-21041 UNIT A, TYPE 2, CLASS 3 A B
-14	1	PLATFORM ASSY. TALL	2 X 4 (NOM) X 12 3/4	ASTM D6199 CLASS 2 B
-13	1	PLATFORM ASSY. TALL	21 X 15 3/4 X 3/4	A-A-55057 TYPE A B
-12	2	PLATFORM ASSY. TALL	2 X 12 (NOM) X 21	ASTM D6199 CLASS 2 B
-11	1	PLATFORM ASSY. SHORT	2 X 6 (NOM) X 12 3/4	ASTM D6199 CLASS 2 A
-10	2	PLATFORM ASSY. SHORT	2 X 12 (NOM) X 29 3/4	ASTM D6199 CLASS 2 A
-9	A/R	NUT, HEX	3/8	ASME B18.2.2 A
-8	A/R	WASHER, PLAIN	3/8	ASME B18.21.1 A
-7	4	BOLT, CARRIAGE	4 1/2 X 3/8	ASME B18.5
-6	2	HEADER	2 X 4 (NOM) X 19 3/4	ASTM D6199 CLASS 2
-5	1	FLOOR	116 X 19 3/4 X 3/4	A-A-55057 TYPE A
-4	2	SKID	2 X 4 (NOM) X 118	ASTM D6199 CLASS 2
-3	2	REAR RUB	4 X 4 (NOM) X 33	ASTM D6199 CLASS 2
-2	2	CENTER RUB	4 X 4 (NOM) X 16	ASTM D6199 CLASS 2
-1	2	FORWARD RUB	4 X 4 (NOM) X 35	ASTM D6199 CLASS 2

CAUTION NOTICES

NOTICE 1: ASSETS PACKAGED IN ACCORDANCE WITH PREVIOUS EDITIONS OF THIS SPI DO NOT REQUIRE REPACKAGING IF THE INTEGRITY OF THE SPI IS MAINTAINED, HOWEVER REF.-27, -28, -29 AND -30 OF THIS SPI MUST BE FOLLOWED.

NOTICE 2: SEE SPIRES FOR A COMPLETE LISTING OF NSN's ASSIGNED TO THIS SPI.

NOTICE 3: PACKAGING MATERIAL MAY BE SUBSTITUTED IF IT MEETS THE REQUIREMENTS OF MIL-STD-2073, PROVIDES EQUAL OR BETTER PROTECTION AND THERE IS NO INCREASED COST TO THE GOVERNMENT.

NOTICE 4: OVERSEAS AND FMS PACKAGING MUST MEET THE REQUIREMENTS OF LEVEL A PACKAGING.

INTERNATIONAL STANDARDS FOR PHYTOSANITARY MEASURES
REVISION OF ISPM NO. 15
REVISION OF WOOD PACKAGING MATERIAL FOR INTERNATIONAL TRADE

THE FOLLOWING STATEMENT IS IN COMPLIANCE WITH THE UNITED NATIONS-IMPLEMENTED RESTRICTIONS ON WOOD PACKAGING MATERIAL (WPM). THIS REQUIREMENT IS SPECIFICALLY CONCERNED WITH INVASIVE SPECIES SUCH AS THE PINEWOOD NEMATODE. WPM IS DEFINED AS WOOD PALLETS, SKIDS, LOAD BOARDS, PALLET COLLARS, WOODEN BOXES, REELS, DUNNAGE, CRATES, FRAMES, AND CLEATS. THE STATEMENT BELOW CITES THE REQUIREMENTS IN DETAIL AND COVERS LUMBER FOR BUILDING CONTAINERS AND PALLETS USED FOR DELIVERIES, RESULTING IN SHIPMENTS WORLDWIDE (DIRECT, OR THROUGH AIR LOGISTICS CENTERS (ALC), CONTAINER CONSOLIDATION POINTS (CCP), OR OTHER BASES).

WOODEN LUMBER, WOODEN PALLET AND PACKAGING/CONTAINER STATEMENT:

ALL WOODEN LUMBER, WOODEN PALLETS, AND WOODEN CONTAINERS PRODUCED ENTIRELY OR IN PART OF WOOD PACKAGING MATERIAL (WPM) SHALL BE CONSTRUCTED FROM DEBARKED WOOD IN ADDITION TO THE APPLICATION OF HEAT-TREATED (HT) MATERIAL (HT TO 56 DEGREES CENTIGRADE OR 133 DEGREES FAHRENHEIT FOR 30 MINUTES). CERTIFICATION/MARKING IS REQUIRED BY AN ACCREDITED AGENCY RECOGNIZED BY THE AMERICAN LUMBER STANDARDS COMMITTEE (ALSC). FOR REFERENCE DOCUMENTATION, SEE LATEST REVISION OF "INTERNATIONAL STANDARDS FOR PHYTOSANITARY MEASURES (ISPM NO. 15), "REGULATION OF WOOD PACKAGING MATERIAL IN INTERNATIONAL TRADE."

NOTES

1. PRESERVE ALL BEARING SURFACES AND BUSHINGS WITH MIL-PRF-16173, GRADE 2, AND ALL SEALED BEARINGS WITH MIL-PRF-23827 GREASE. WRAP ALL PRESERVED AREAS WITH MIL-PRF-121, GRADE A, TYPE I, AND SECURE IN PLACE WITH ASTM D6123 TYPE I OR II MASKING TAPE OR EQUIVALENT.

2. COVER ALL AREAS THAT CONTACT THE STABILIZER WITH REF.-25, SECURE WITH STAPLES OR NAILS.

3. PLACE SHROUD, REF.-26 OVER ITEM AFTER STABILIZER IS IN PLACE.

4. LAG BOLTS MAY BE REMOVED FROM BOTH SIDES FOR EASE OF ACCESS.

5. PLACEMENT OF SADDLE SUPPORT, REF.-19, MAY VARY BETWEEN STABILIZERS, SO NAIL SUPPORTS AFTER PLACEMENT OF STABILIZER.

SPECIAL PACKAGING INSTRUCTION	CODE ID 98747	SPI NO. (TPO) F01-141-1064
ITEM NOMENCLATURE STABILIZER, HORIZONTAL		SHEET 4 OF 8

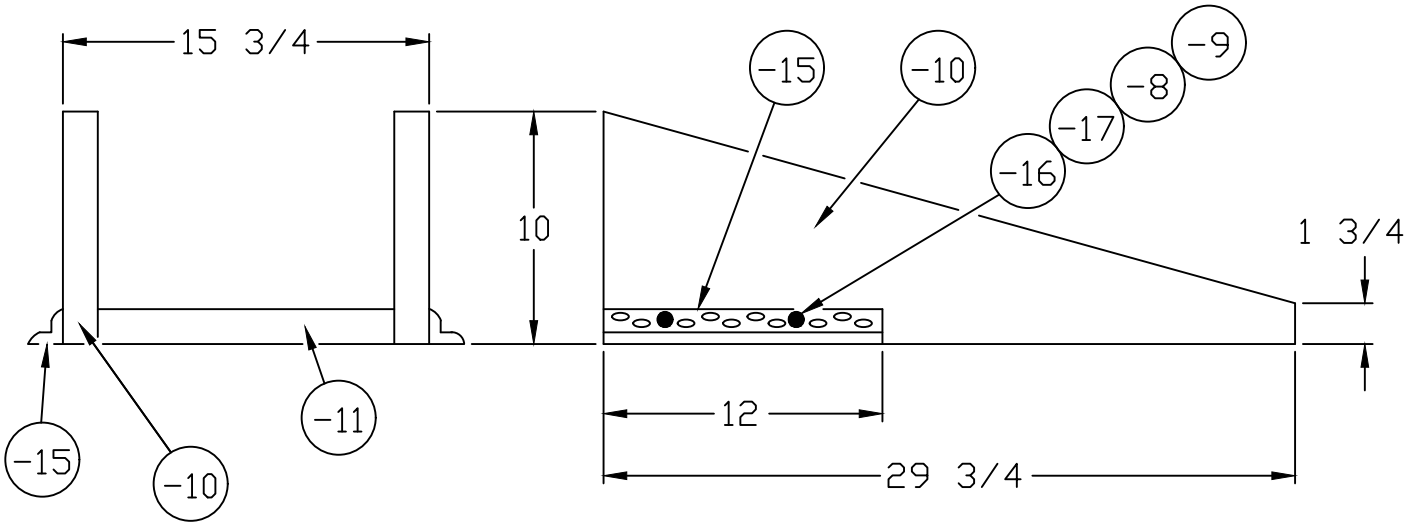

DETAIL A

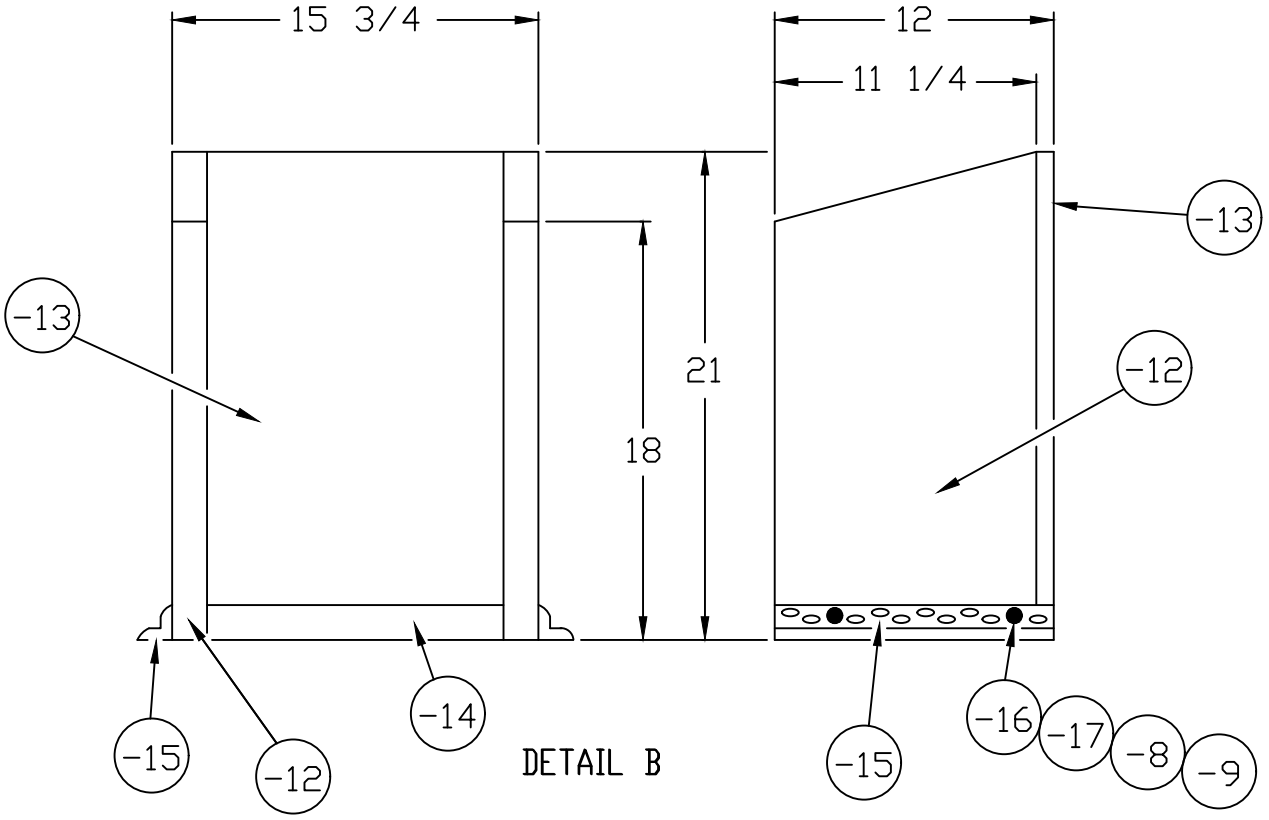

DETAIL B

SPECIAL PACKAGING INSTRUCTION	CODE ID 98747	SPI NO. (TPO) F01-141-1064
ITEM NOMENCLATURE STABILIZER, HORIZONTAL		SHEET 5 OF 8

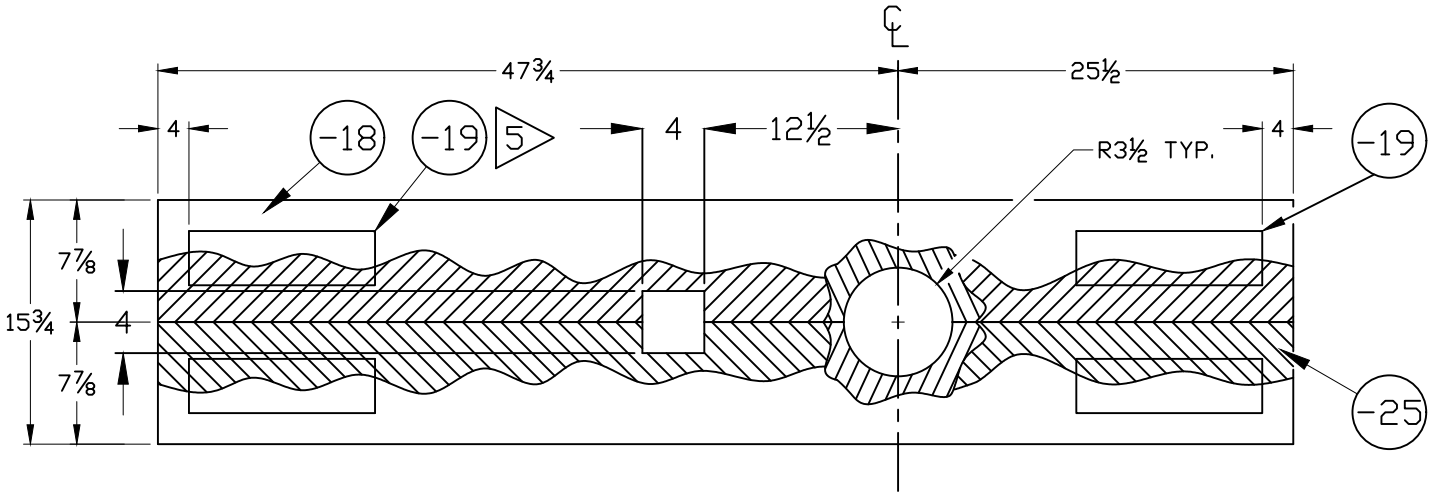

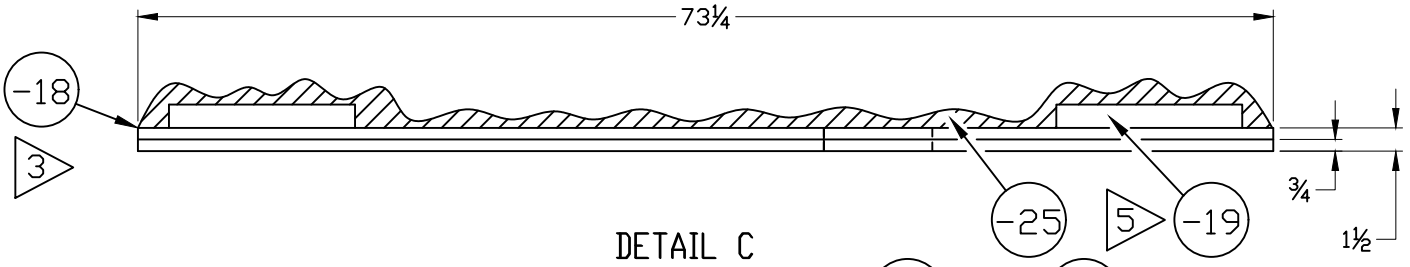

DETAIL C

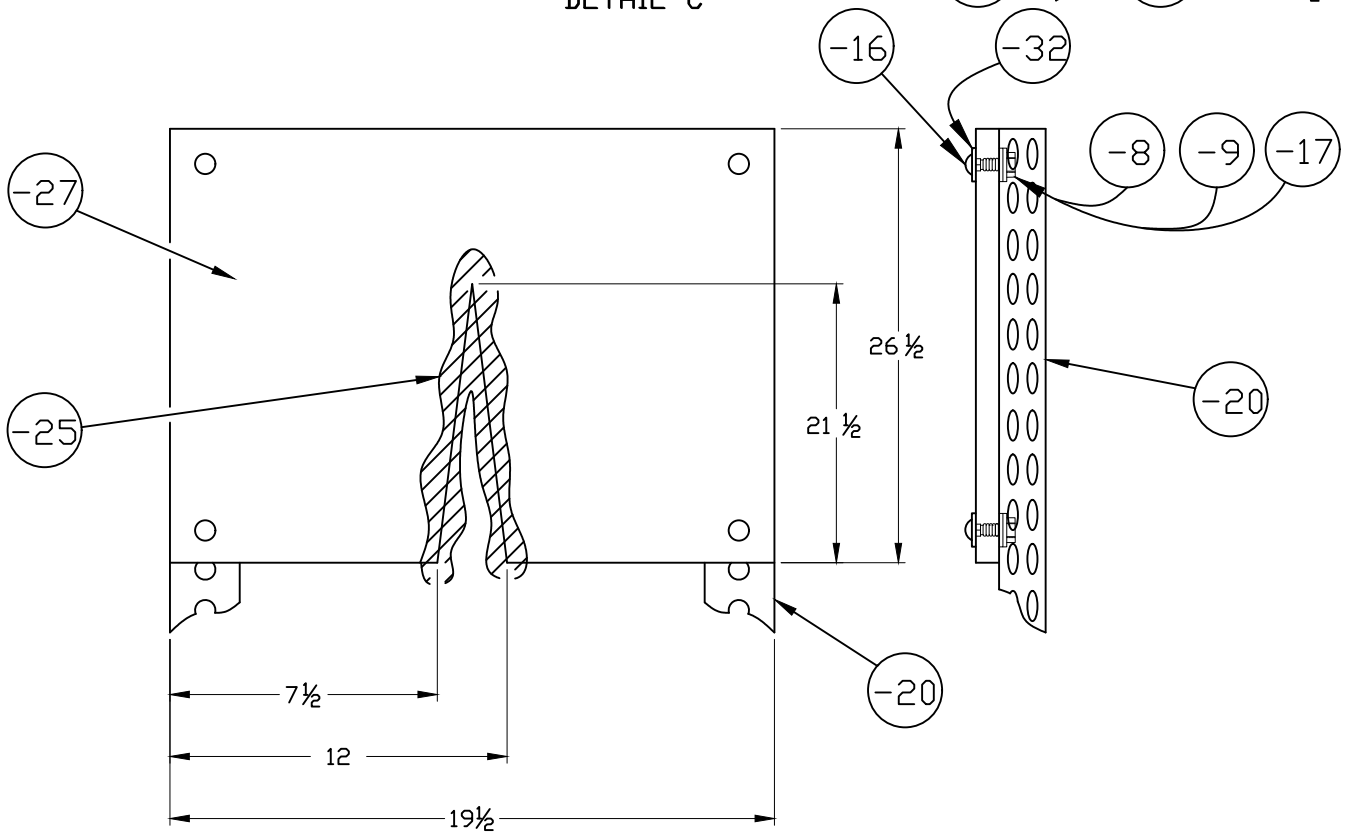

DETAIL D

SPECIAL PACKAGING INSTRUCTION	CODE ID 98747	SPI NO. (TPO) F01-141-1064
ITEM NOMENCLATURE STABILIZER, HORIZONTAL		SHEET 6 OF 8

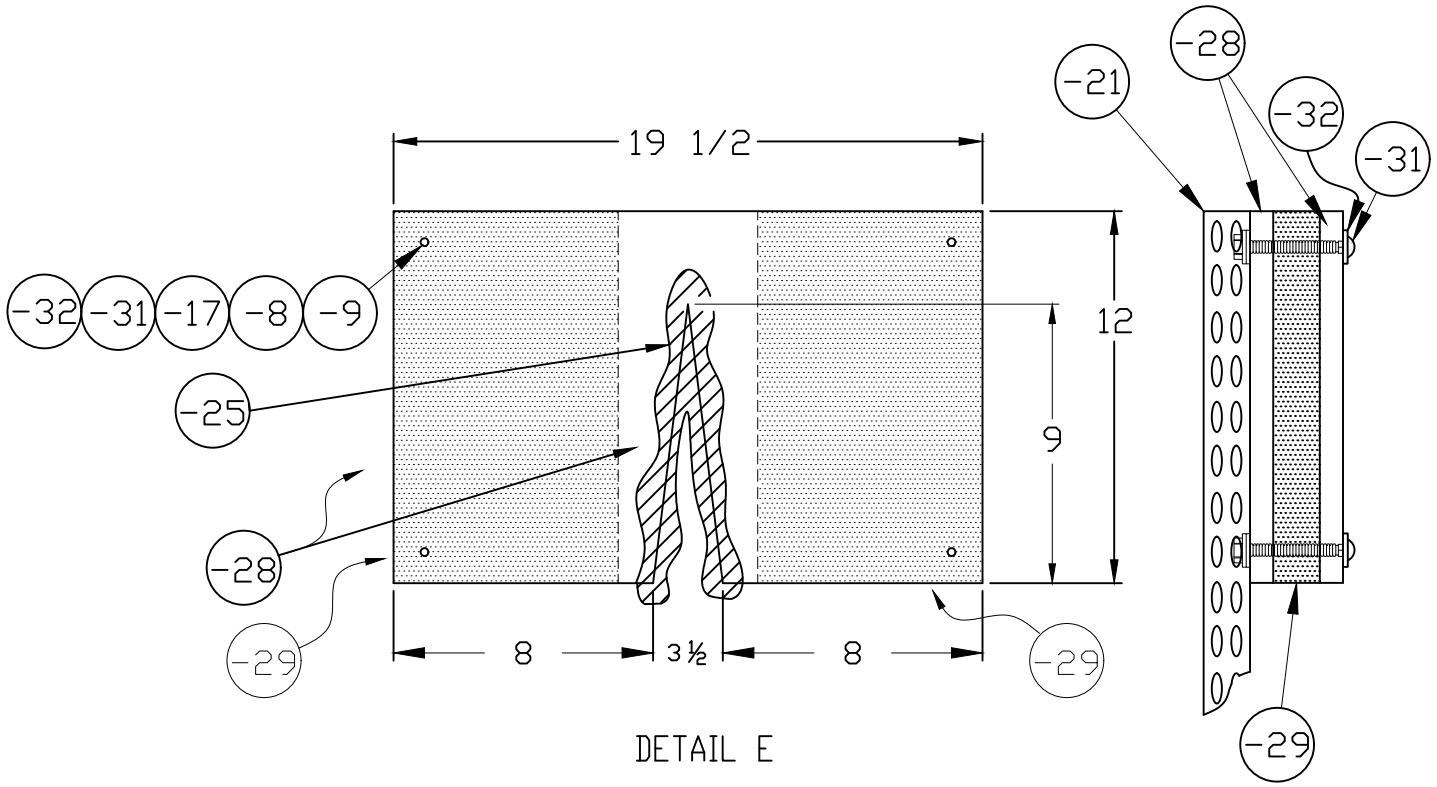

DETAIL E

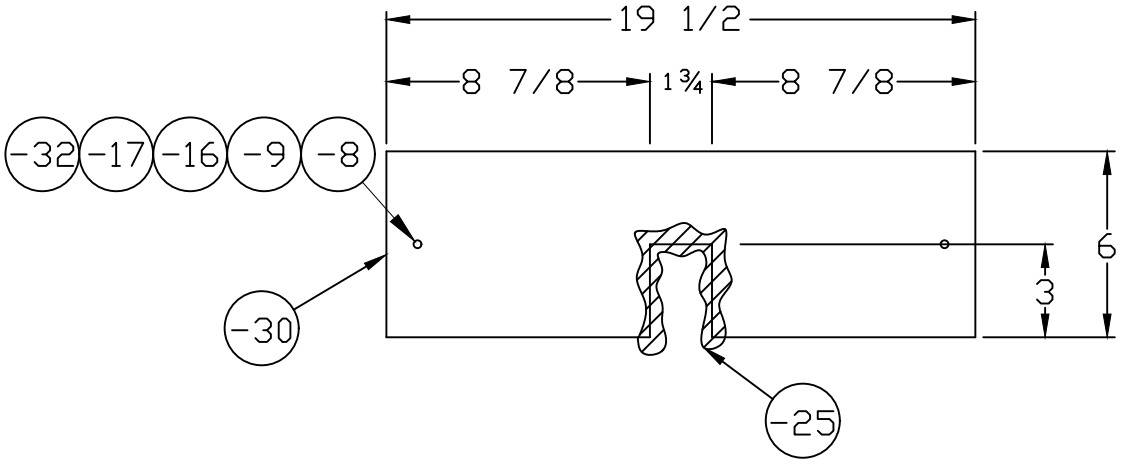

DETAIL F

SPECIAL PACKAGING INSTRUCTION	CODE ID 98747	SPI NO. (TPO) F01-141-1064
ITEM NOMENCLATURE STABILIZER, HORIZONTAL		SHEET 7 OF 8

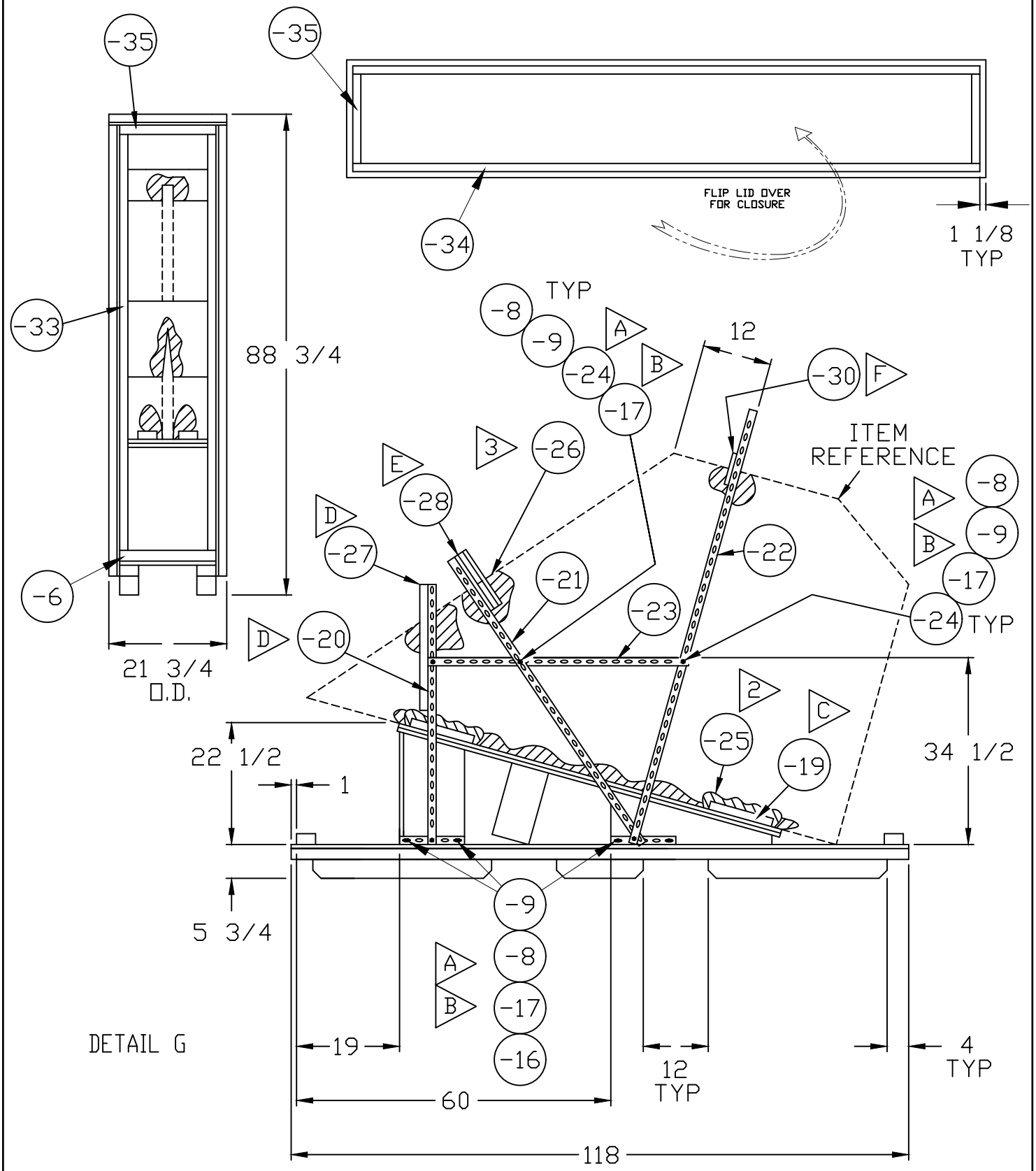

SPECIAL PACKAGING INSTRUCTION	CODE ID 98747	SPI NO. (TPO) F01-141-1064
ITEM NOMENCLATURE STABILIZER, HORIZONTAL		SHEET 8 OF 8

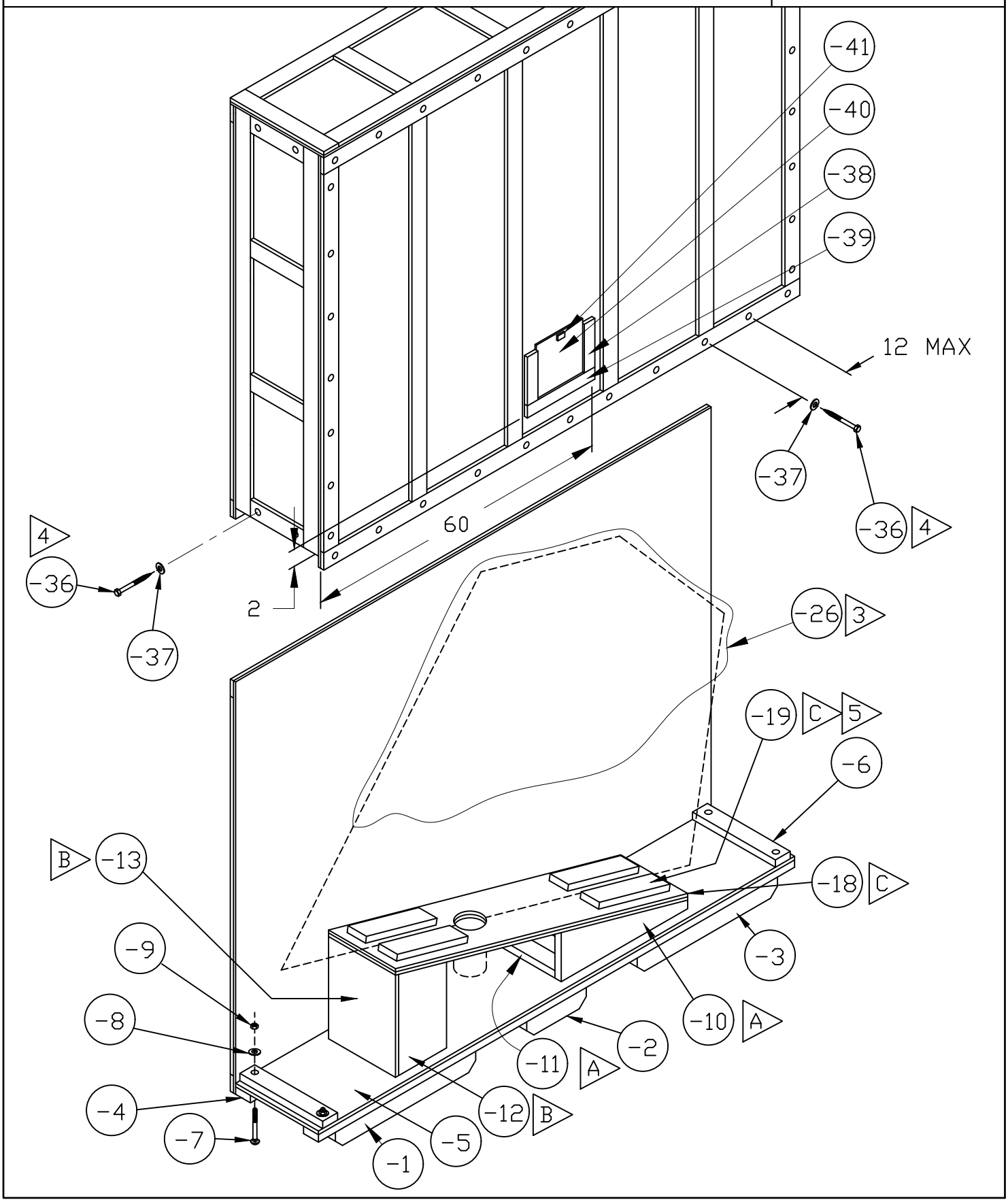

DD FORM MARCH 87 2169C MOD

COMPUTER GENERATED