U. S. Department of Veterans Affairs

Office of Information and Technology

Infrastructure Operations (IO)

COMMUNITY BASED OUTPATIENT CLINIC (CBOC)
INSIDE PLANT
INFORMATION TRANSPORT SYSTEMS SPECIFICATIONS

DEVELOPED BY:

DATA CENTER AND INFRASTRUCTURE ENGINEERING

DEPARTMENT OF VETERANS AFFAIRS

OFFICE OF INFORMATION AND TECHNOLOGY

INFRASTRUCTURE OPERATIONS - APPLICATION HOSTING, CLOUD AND EDGE SOLUTIONS

ENTERPRISE DATA CENTER AND INFRASTRUCTURE ENGINEERING

EDICT

ENTERPRISE DATA CENTER INFRASTRUCTURE COLLABORATION TEAM

PROJECT:

CBOC INFORMATION TRANSPORT SYSTEMS SPECIFICATIONS

MARK	DATE	DESCRIPTION

ISSUE:

DRAWING No:	
FILE:	CBOC DESIGN TEMPLATE-v2.rvtd
DESIGNED BY:	KEVIN GRZELKA, CTDC
CHECKED BY:	MICHAEL JULIAN, RCDD KELLY BATES
DOC VERSION No:	2
PRINT DATE:	May 19, 2023
ISSUE DATE:	May 17, 2023

SHEET TITLE

COVER

LEGEND

ELECTRICAL

- DETAIL NUMBER
- DETAIL NUMBER TYPICAL THROUGHOUT THIS SHEET
- BONDING BUSBAR
- OR WIRE MESH CABLE TRAY SIZE COMMENSURATE WITH REQUIREMENTS
- ELECTRICAL SERVICE PANEL
- OVERHEAD POWER DROP CORD WITH L21-20 RECEPTACLE
- OVERHEAD POWER DROP CORD WITH L21-30 RECEPTACLE
- POWER JUNCTION BOX FOR 60A CONNECTION
- POWER BUSWAY TAP WITH SINGLE BREAKER 3' DROP CORD WITH L21-20R FOR STANDARD-DENSITY CABINETS
- POWER BUSWAY TAP WITH DUAL BREAKER AND TWO 3' DROP CORDS WITH L21-20R FOR HIGH DENSITY CABINETS
- TYPICAL UNSWITCHED 110 VOLT, 20 AMP DUPLEX CONVENIENCE OUTLET
- MOTION SENSOR LIGHT SWITCH
- M CEILING MOUNTED MOTION SENSOR (LOCATIONS AS REQUIRED FOR FULL ROOM COVERAGE)
- PIV ENABLED TWO-FACTOR AUTHENTICATION KEYPAD
- FIXED CAMERA, PAN/TILT/ZOOM, PASSIVE INFRARED CAMERA - DUAL TECHNOLOGY*
- LED LIGHTING
- POWER BUSWAY WITH METERED HEADEND FOR A SIDE POWER DISTRIBUTION
- POWER BUSWAY WITH METERED HEADEND FOR B SIDE POWER DISTRIBUTION
- MODULAR UPS CABINET (POWER MODULES, BATTERIES, POWER PANELS)

TELECOMMUNICATIONS

- DETAIL NUMBER
- DETAIL NUMBER TYPICAL THROUGHOUT THIS SHEET
- OR WIRE MESH CABLE TRAY SIZE COMMENSURATE WITH REQUIREMENTS
- CONDUIT WITH BUSHING FIRESTOP AND INNERDUCT FOR FIBER
- SLEEVE WITH BUSHING FIRESTOP AND INNERDUCT FOR FIBER
- SLEEVE OR CONDUIT WITH BUSHING FIRESTOP AND INNERDUCT FOR FIBER
- TELECOMMUNICATIONS CHANNEL RACK, 19" RAILS, #12-24 TAPPED EIA HOLE PATTERN, 30" DEEP CHANNEL MINIMUM, 7' HIGH, 45RU, WHITE
- VERTICAL CABLE MANAGER WITH DOOR, 6" WIDE MINIMUM
- SERVER CABINET, 45U, 24"X48" (NOMINAL), SQUARE PUNCHED RAIL, SINGLE PERFORATED FRONT DOOR, SOLID REAR DOOR (VERTICAL EXHAUST DUCT IMPLEMENTATION), DOUBLE PERFORATED REAR DOOR (NO VED), TWO-POINT KEYED LOCKS, WHITE,SOLID SIDE PANELS
- TELECOMMUNICATIONS CABINET, 7' HIGH, 45U, 40"X48" (NOMINAL), SQUARE PUNCHED RAIL, SINGLE PERFORATED FRONT DOOR, SOLID REAR DOOR (VERTICAL EXHAUST DUCT IMPLEMENTATION), TWO-POINT KEYED LOCKS, WHITE,SOLID SIDE PANELS

ARCHITECTURAL

- DEMO WALL
- NEW WALL
- 4'X 8' AC GRADE ¾" TRADE SIZE PLYWOOD BACKBOARD PAINTED HIGH-GLOSS WHITE WITH TWO COATS OF FIRE RESISTANT PAINT FOR SERVICE PROVIDER / SECURITY / VIDEO / ET CETERA
- 3 FT WIDE, 8 FT HIGH DOOR, FIRE RESISTANT TO ¾ HOUR OR MORE PER AHJ
- 6 FT WIDE, 8 FT HIGH DOOR, NO CENTER MULLION, FIRE RESISTANT TO ¾ HOUR OR MORE PER AHJ

MECHANICAL

- STANDARD 25% OPEN PERFORATED FLOOR TILE
- COLD AISLE CONTAINMENT (PVC CURTAIN)
- RETURN AIR DUCT
- CRAC COMPUTER ROOM AIR CONDITIONER (SEE COMPUTATIONAL FLUID DYNAMICS REPORT FOR SIZING)
- REQUIRED CLEARANCE AROUND CRACS
- AC SPLIT PACKAGE AIR CONDITIONER OR EQUIVALENT 24/7 SUPPLY AIR TO REJECT 5KW (17,000 BTU PER TELECOMMUNICATIONS RACK)
- AC ADDITIONAL SPLIT PACKAGE AIR CONDITIONER OR LARGER UNIT TO REJECT HEAT FROM ADDITIONAL RACKS (17,000 BTU PER TELECOMMUNICATIONS RACK)

NOTES

ELECTRICAL

1. MINIMUM TWO 110V 20A CONVENIENCE BUILDING POWER OUTLETS PER WALL; PLACEMENT DETERMINED BY OTHERS.
2. PRIMARY BONDING BUSBAR PLACEMENT DETERMINED BY OTHERS
3. SECONDARY BONDING BUSBAR PLACEMENT DETERMINED BY OTHERS
4. SERVICE PANEL FOR A-SIDE POWER, GENERATOR BACKED IF THE FACILITY HAS GENERATION CAPABILITIES. SHALL BE EQUIPPED WITH POWER METER; PLACEMENT PER OTHERS
5. SERVICE PANEL FOR B-SIDE POWER, GENERATOR BACKED IF POSSIBLE. SHALL BE EQUIPPED WITH POWER METER; PLACEMENT PER OTHERS
6. 20 AMP 208 VOLT THREE-PHASE TWIST LOCK RECEPTACLE (L21-20R);2.5 FT AFF {WYE (5-WIRE)} COORDINATE INSTALLATION LOCATION WITH TELECOMMUNICATIONS CONTRACTOR
7. 30 AMP 208 VOLT THREE-PHASE TWIST LOCK RECEPTACLE (L21-30R);2.5 FT AFF {WYE (5-WIRE)} COORDINATE INSTALLATION LOCATION WITH TELECOMMUNICATIONS CONTRACTOR
8. POWER BUS BAR (VOLTAGE AND AMPERAGE SUFFICIENT TO SUPPORT TEN [10] SINGLE BREAKER 208V, 20 AMP, L21-20R BUSWAY TAPS) FED FROM A SIDE SOURCE
9. POWER BUS BAR (VOLTAGE AND AMPERAGE SUFFICIENT TO SUPPORT TEN [10] SINGLE BREAKER 208V, 20 AMP, L21-20R BUSWAY TAPS) FED FROM B SIDE SOURCE
10. POWER BUS BAR (VOLTAGE AND AMPERAGE SUFFICIENT TO SUPPORT FIVE [5] SINGLE BREAKER 208V, 20 AMP, L21-20R BUSWAY TAPS) FED FROM A SIDE SOURCE
11. POWER BUS BAR (VOLTAGE AND AMPERAGE SUFFICIENT TO SUPPORT FIVE [5] 208V, 20 AMP, L21-20R BUSWAY TAPS) FED FROM B SIDE SOURCE
12. BLUE CABLE PATH FOR A-SIDE UPS
13. YELLOW CABLE PATH FOR B-SIDE UPS

LIGHTING:
1. LED LIGHTING PLACED IN AISLES DIRECTLY IN FRONT OF AND BEHIND CABINET ROWS
2. LIGHTING OPERATED BY MOTION SENSOR PER CABINET ROW OR SECTION
3. 500 LUX IN THE HORIZONTAL PLANE AND 200 LUX IN THE VERTICAL PLANE REQUIRED MEASURED AT 3 FT AFF IN FRONT OF AND BEHIND EQUIPMENT CABINETS

TELECOMMUNICATIONS

1. SERVICE PROVIDER ENTRANCE POINT
2. SERVICE BACKBONE (ENTRANCE ROOM-MAIN COMPUTER ROOM)
3. MAIN CROSS CONNECT (CAMPUS/BUILDING DISTRIBUTOR) – BACKBONE CABLING (MCR-TELECOMMUNCIATIONS ROOMS)
4. ENTRANCE ROOM (TR) INTERCONNECT
5. HORIZONTAL DISTRIBUTION TO WORK AREA OUTLETS (WAO)
6. ADDITIONAL CABINETS OR TELECOMMUNICATIONS RACKS TO MEET REQUIREMENTS.
7. HORIZONTAL DISTRIBUTION AREA – SIDE A
8. HORIZONTAL DISTRIBUTION AREA – SIDE B
9. MAIN DISTRIBUTION AREA – SIDE A
10. MAIN DISTRIBUTION AREA – SIDE B
11. STANDARD DENSITY CABINET SUPPORTING 5KW REDUNDANT
12. HIGH DENSITY CABINET SUPPORTING 10KW REDUNDANT
13. 40" TELECOMMUNICATIONS CABINET WITH HORIZONTAL CABLE CUTOUTS AND APPROPRIATE CABLE MANAGEMENT ACCESSORIES, SUPPORTING 5KW REDUNDANT
14. WIRE MESH CABLE TRAY MINIMUM OF 6"X 12" WITH SECOND LEVEL OF FIBER CHANNEL PATHWAY (4" X 4")
15. BLUE CABLE TRAY PATH FOR CABLES TO THE A-SIDE MDA/HDA
16. YELLOW CABLE TRAY PATH FOR CABLES TO THE B-SIDE MDA/HDA
17. TELECOMMUNICATIONS CHANNEL RACK

ARCHITECTURAL

FLOORPLANS ARE NOT TO SCALE
DOCUMENTS ARE NOT TO BE USED FOR CONSTRUCTION

MECHANICAL

CHANGES TO DESIGN WILL REQUIRE A NEW COMPUTATIONAL FLUID DYNAMICS (CFD) ANALYSIS TO BE PERFORMED

DEPARTMENT OF VETERANS AFFAIRS

OFFICE OF INFORMATION AND TECHNOLOGY

INFRASTRUCTURE OPERATIONS - APPLICATION HOSTING, CLOUD AND EDGE SOLUTIONS

ENTERPRISE DATA CENTER AND INFRASTRUCTURE ENGINEERING

EDICT
ENTERPRISE DATA CENTER INFRASTRUCTURE COLLABORATION TEAM

PROJECT:

CBOC INFORMATION TRANSPORT SYSTEMS SPECIFICATIONS

MARK	DATE	DESCRIPTION

ISSUE:

DRAWING No:	
FILE:	CBOC DESIGN TEMPLATE-v2.rvtd
DESIGNED BY:	KEVIN GRZELKA, CTDC
CHECKED BY:	MICHAEL JULIAN, RCDD KELLY BATES
DOC VERSION No:	2
PRINT DATE:	May 19, 2023
ISSUE DATE:	May 17, 2023

SHEET TITLE

LEGEND

SHEET: 2 OF 20

GENERIC TELECOMMUNICATIONS MEDIA AND INTERFACE SPECIFICATIONS FOR TELECOMMUNICATION SPACES			
ID	PRIMARY ATTRIBUTE	SECONDARY ATTRIBUTE	SPECIFICATION
1	COPPER PATCH PANELS	PERFORMANCE CATEGORY	CATEGORY 6A (10 GBE)
		POSITION COUNT	48
		FORM FACTOR	ANGLED
		SIZE	ONE RACK UNIT (RU)
		JACK COLOR CODING	A-SIDE BLUE / B-SIDE YELLOW FOR DUAL PATH DISTRO WITHIN COMPUTER ROOMS (DATA CENTERS); UTP DISTRO TO WAOs IS EXCLUDED
2	FIBER DISTRIBUTION PANELS	CASSETTE CAPACITY	12 CASSETTES OR 6 DOUBLE CASSETTES
		CASSETTE USER INTERFACES	LC DUPLEX CONNECTORS / MPO-8
		CASSETTE BACKBONE INTERFACES	MPO-24/ MPO-12
		PERFORMANCE CHARACTERISTICS	OM4 LASER OPTIMIZED 50/125 MULTIMODE (MM) / OS1(OS2) 9/125 SINGLE MODE (SM)
		FORM FACTOR	ONE RU
3	UNSHIELDED TWISTED PAIR (UTP) (HORIZONTAL AND FIRST LEVEL BACKBONE)	PERFORMANCE CATEGORY	CATEGORY 6A (10 GBE); 24-26 GAUGE
		PERFORMANCE SPECIFICATIONS	MEETS OR EXCEEDS TIA-EIA-568-C.2-10, TSB-155.
4	FIBER (HORIZONTAL AND FIRST LEVEL BACKBONE)	PERFORMANCE CATEGORY	OM4 LASER OPTIMIZED / OS1 / OS2
		PERFORMANCE SPECIFICATIONS	LASER OPTIMIZED 50/125 MM FIBERS WITH AT LEAST 4,700 MHZ-KM AT 850 NM / OS1 9/125 SM FIBERS (INTRA-BUILDING) / OS2 9/125 SM (INTER-BUILDING)
		MODE	MULTIMODE/SINGLE MODE
		JACKET COLOR	AQUA (OM4) / LIME (OM5) / YELLOW (SM) / BLACK (OSP)
		MEDIA CONNECTOR	PRE-TERMINATE WITH MULTI-FIBER PUSH ON (MPO), (FIELD TERMINATION AUTHORIZED FOR DISTRIBUTION LEAVING THE COMPUTER ROOM)
		STRAND COUNT	12 OR 24
		BUNDLING	LOOSE TUBE (OUTDOOR)/TIGHT BUFFERED (INDOOR)
5	UTP PATCH CORDS	PERFORMANCE CATEGORY	CATEGORY 6A, 26-28 GAUGE, STRANDED
		PERFORMANCE SPECIFICATIONS	CENTER TUNED TO HORIZONTAL MEDIA
		TERMINATION METHOD	FACTORY PRE-TERMINATED
6	FIBER PATCH CORDS	PERFORMANCE CATEGORY	OM5/ OM4 / OS1 / OS2
		PERFORMANCE SPECIFICATIONS	LASER OPTIMIZED 50/125 MM FIBERS WITH AT LEAST 4,700 MHZ-KM AT 850 NM / OS1 9/125 SM FIBERS (INTRA-BUILDING) / OS2 9/125 SM (INTER-BUILDING)
		MODE	MULTIMODE/SINGLE MODE
		JACKET COLOR	AQUA (OM4) / LIME (OM5) / YELLOW (SM)
		MEDIA CONNECTOR	PRE-TERMINATED WITH DUPLEX LC / MPO-8

DEPARTMENT OF VETERANS AFFAIRS

OFFICE OF INFORMATION AND TECHNOLOGY

INFRASTRUCTURE OPERATIONS - APPLICATION HOSTING, CLOUD AND EDGE SOLUTIONS

ENTERPRISE DATA CENTER AND INFRASTRUCTURE ENGINEERING

EDICT
ENTERPRISE DATA CENTER INFRASTRUCTURE COLLABORATION TEAM

PROJECT:

CBOC INFORMATION TRANSPORT SYSTEMS SPECIFICATIONS

MARK	DATE	DESCRIPTION

ISSUE:

DRAWING No:	
FILE:	CBOC DESIGN TEMPLATE-v2.rvtd
DESIGNED BY:	KEVIN GRZELKA, CTDC
CHECKED BY:	MICHAEL JULIAN, RCDD KELLY BATES
DOC VERSION No:	2
PRINT DATE:	May 19, 2023
ISSUE DATE:	May 17, 2023

SHEET TITLE

SPECIFICATIONS

- MINIMUM 170 FT²
- STATIC DISSIPATING FLOOR
- NO DROP CEILING
- SLAB TO DECK ABOVE 12 FT MINIMUM (16 FT PREFERRED)
- WALLS FULL HEIGHT TO DECK ABOVE

TELECOMMUNICATIONS CHANNEL RACK, 19" RAILS, #12-24 TAPPED EIA HOLE PATTERN, MINIMUM 30" DEEP, 7' HIGH, 45RU, WHITE

4'X 8' AC GRADE ¾" TRADE SIZE PLYWOOD BACKBOARD PAINTED HIGH-GLOSS WHITE WITH TWO COATS OF FIRE RESISTANT PAINT FOR SECURITY EQUIPMENT

CONDUIT OR SLEEVES WITH BUSHING AND FIRESTOP OR OTHER AHJ-APPROVED PENETRATION FOR HORIZONTAL DISTRIBUTION FROM WORK AREA OUTLETS AND TELECOMMUNICATION ROOMS

VERTICAL CABLE MANAGER WITH DOOR, 6" WIDE

SERVICE PANEL FOR A-SIDE POWER, GENERATOR BACKED IF THE FACILITY HAS GENERATION CAPABILITIES. SHALL BE EQUIPPED WITH POWER METER; PLACEMENT PER OTHERS

SERVICE PANEL FOR B-SIDE POWER, GENERATOR BACKED IF POSSIBLE. SHALL BE EQUIPPED WITH POWER METER; PLACEMENT PER OTHERS

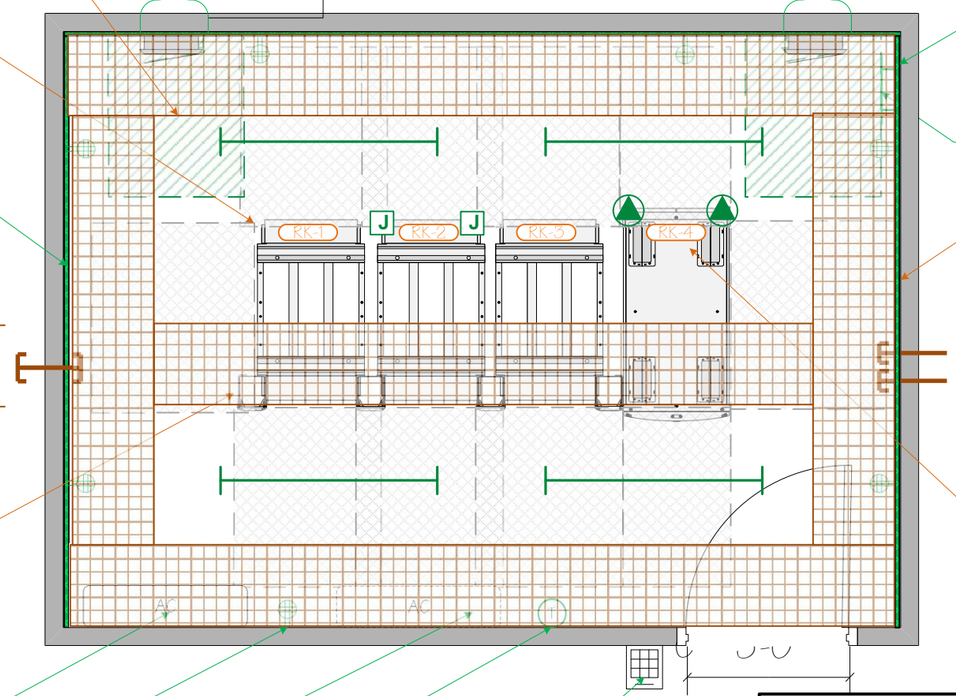

4'X 8' AC GRADE ¾" TRADE SIZE PLYWOOD BACKBOARD PAINTED HIGH-GLOSS WHITE WITH TWO COATS OF FIRE RESISTANT PAINT FOR SERVICE PROVIDER EQUIPMENT

PRIMARY OR SECONDARY BONDING BUSBAR (PBB/SBB)

WIRE MESH CABLE TRAY SIZE COMMENSURATE WITH REQUIREMENTS

TWO (2) CONDUITS INTERCONNECTING NETWORK SUPPORT CENTER WITH ENTRANCE FACILITY. TRADE SIZE 2

SERVER CABINET, 45U, 24"X48" (NOMINAL), SQUARE PUNCHED RAIL, SINGLE PERFORATED FRONT DOOR, SOLID REAR DOOR, TWO-POINT KEYED LOCKS, WHITE,SOLID SIDE PANELS

SPLIT PACKAGE AIR CONDITIONER (32,600 BTU/H)

TYPICAL UNSWITCHED DUPLEX CONVENIENCE OUTLETS

ADDITIONAL SPLIT PACKAGE AIR CONDITIONER (32,600 BTU) WHEN NECESSARY

AIR CONDITIONER THERMOSTAT

PIV/ KEYPAD

NOTE:

THREE FEET CLEARANCE FROM WALL MOUNTED EQUIPMENT MUST BE MAINTAINED.

30" WIDE BY 36" FRONT CLEARANCE REQUIRED AROUND 120/208V ELECTRICAL PANEL BOARDS

36" CLEARANCE REQUIRED AROUND FRONT, BACK AND SIDES OF RACKS AND CABINETS

TWO L21-20 BRANCH CIRCUITS PER RACK CAN BE USED FOR ALL RACKS ELIMINATING THE NEED FOR ZONE PDUs IF BREAKER SPACE IS NOT AN ISSUE (ALTERNATELY, zPDUs CAN SUPPORT EITHER TWO OR THREE RACKS EACH)

1 GENERIC FLOOR PLAN FOR HEALTH CARE FACILITY EQUIPMENT ROOM

DEPARTMENT OF VETERANS AFFAIRS

OFFICE OF INFORMATION AND TECHNOLOGY

INFRASTRUCTURE OPERATIONS - APPLICATION HOSTING, CLOUD AND EDGE SOLUTIONS

ENTERPRISE DATA CENTER AND INFRASTRUCTURE ENGINEERING

EDICT
ENTERPRISE DATA CENTER INFRASTRUCTURE COLLABORATION TEAM

PROJECT:

CBOC INFORMATION TRANSPORT SYSTEMS SPECIFICATIONS

MARK	DATE	DESCRIPTION

ISSUE:

DRAWING No:	
FILE:	CBOC DESIGN TEMPLATE-v2.rvtd
DESIGNED BY:	KEVIN GRZELKA, CTDC
CHECKED BY:	MICHAEL JULIAN, RCDD KELLY BATES
DOC VERSION No:	2
PRINT DATE:	May 19, 2023
ISSUE DATE:	May 17, 2023

SHEET TITLE

GENERIC HEALTH CARE FACILITY EQUIPMENT ROOM

SHEET: 4 OF 20

6 TYP

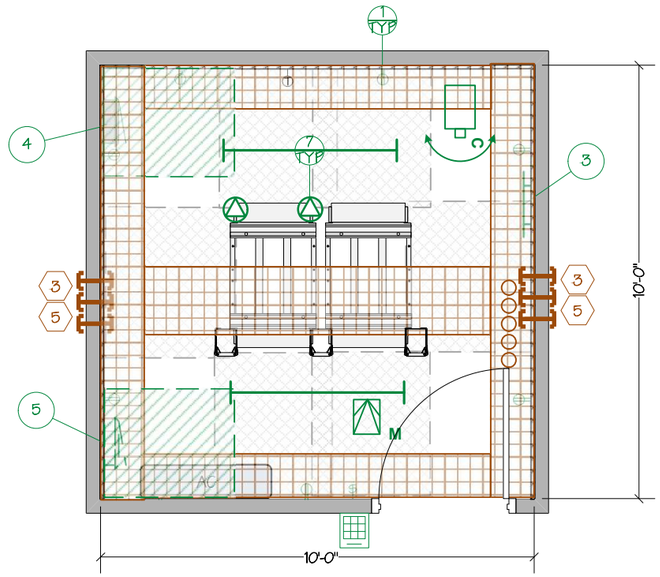

3 GENERIC FLOOR PLAN FOR TELECOMMUNICATIONS ROOMS (TWO RACK REQUIREMENT)
(TELECOMMUNICATIONS SPACE SUPPORTING NETWORK DISTRIBUTION TO WORK AREA OUTLETS)
MINIMUM REQUIREMENT FOR HEALTHCARE FACILITY REMODELS

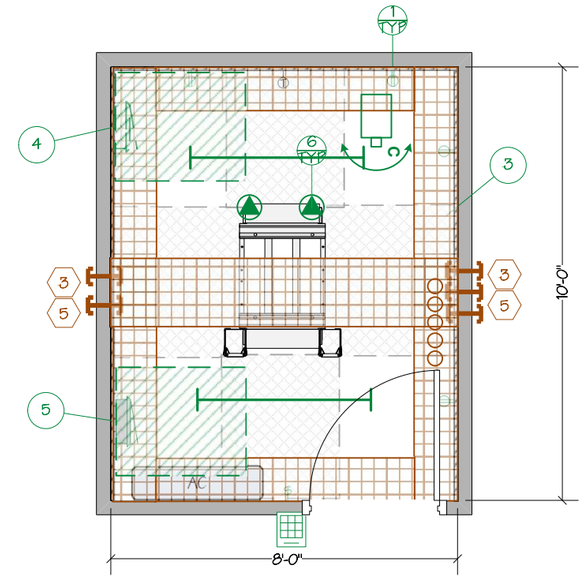

4 GENERIC FLOOR PLAN FOR TELECOMMUNICATIONS ROOMS (ONE RACK REQUIREMENT)
(TELECOMMUNICATIONS SPACE SUPPORTING NETWORK DISTRIBUTION TO WORK AREA OUTLETS)

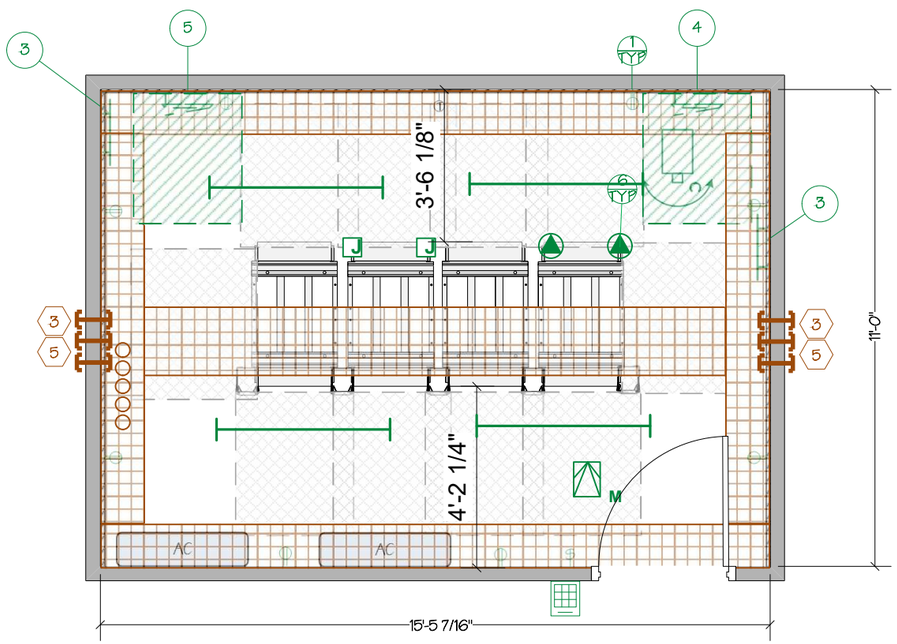

2 GENERIC FLOOR PLAN FOR HEALTH CARE FACILITY TELECOMMUNICATIONS ROOMS

NOTE:

- THERE SHALL BE A MINIMUM OF ONE TELECOMMUNICATIONS ROOM (TR) PER FLOOR.
- ADDITIONAL ROOMS SHOULD BE PROVIDED WHEN THE HORIZONTAL DISTRIBUTION DISTANCE TO THE WORK AREA EXCEEDS 90 M (295 FT) OR THE ROOM SIZE CAN'T SUPPORT ALL WORK AREA OUTLETS.

FLOOR SPACE REQUIREMENT:

1. FOR FACILITIES FROM 1 TO 3,000 SQ. FT., PROVIDE A STANDARD 26U TELECOMMUNICATIONS ENCLOSURE LOCATED IN A SECURED SPACE THAT IS NOT NECESSARILY DEDICATED TO TELECOMMUNICATIONS PURPOSES. SEE SHEETS 16-19.
2. FOR FACILITIES FROM 3,001 TO 6,000 SQ. FT., PROVIDE A 1-RACK TR (80SF, 10'X8' FORM FACTOR).
3. FOR FACILITIES FROM 6,001 TO 10,000 SQ. FT., PROVIDE A 2-RACK TR (100SF, 10'X10' FORM FACTOR).
4. FOR FACILITIES FROM 10,001 TO 25,000 SQ. FT., PROVIDE A 3-RACK TR (120SF, 10'X12' FORM FACTOR).
5. FOR FACILITIES GREATER THAN 25,000 SQ. FT., PROVIDE TRS IN ADDITION TO THE MCR PER THE SIZING AND QUANTITY DETERMINED BY THE *TR DESIGN CHECKLIST* IN ACCORDANCE WITH THE SERVING ZONE SIZE OF EACH PLANNED TR.
6. 3' OF CLEARANCE ON THREE SIDES OF THE RACKS MUST BE MAINTAINED.
7. THE FOURTH SIDE MUST BE AT LEAST 12" FROM A WALL.
8. 30" WIDE BY 36" FRONT CLEARANCE REQUIRED AROUND ELECTRICAL PANEL BOARDS.

A MINIMUM OF FIVE METRIC DESIGNATOR 103 (TRADE SIZE 4) CONDUITS OR SLEEVES SHOULD BE PROVIDED TO SERVICE UP TO 40,000 SQ FT OF USABLE FLOOR SPACE. ONE ADDITIONAL CONDUIT OR SLEEVE SHOULD BE PROVIDED FOR EACH ADDITIONAL 40,000 SQ FT OF USABLE FLOOR SPACE.

EACH RACK MUST BE CAPABLE OF SUPPORTING 5KW OF LOAD. HOWEVER, IN AGGREGATE FOR TRS WITH MORE THAN ONE RACK, THE FULL 5KW OF HEAT REJECTION PER RACK IS NOT REQUIRED. SEE BELOW:

- 1 RACK TR = 5KW COOLING
- 2 RACK TR = 7KW COOLING
- 3 RACK TR = 8.5KW COOLING
- 4 RACK TR = 10KW COOLING

TWO L21-20 BRANCH CIRCUITS PER RACK CAN BE USED FOR ALL RACKS ELIMINATING THE NEED FOR ZONE PDUs IF BREAKER SPACE IS NOT AN ISSUE (ALTERNATELY, zPDUs CAN SUPPORT EITHER TWO OR THREE RACKS EACH)

1 TELECOMMUNICATION ROOM NOTES

DEPARTMENT OF VETERANS AFFAIRS

OFFICE OF INFORMATION AND TECHNOLOGY

INFRASTRUCTURE OPERATIONS - APPLICATION HOSTING, CLOUD AND EDGE SOLUTIONS

ENTERPRISE DATA CENTER AND INFRASTRUCTURE ENGINEERING

EDICT
ENTERPRISE DATA CENTER INFRASTRUCTURE COLLABORATION TEAM

PROJECT:

CBOC INFORMATION TRANSPORT SYSTEMS SPECIFICATIONS

MARK	DATE	DESCRIPTION

ISSUE:

DRAWING No:	
FILE:	CBOC DESIGN TEMPLATE-v2.rvtx
DESIGNED BY:	KEVIN GRZELKA, CTDC
CHECKED BY:	MICHAEL JULIAN, RCDD KELLY BATES
DOC VERSION No:	2
PRINT DATE:	May 19, 2023
ISSUE DATE:	May 17, 2023

SHEET TITLE

TELECOMMUNICATIONS ROOMS

SHEET: 5 OF 20

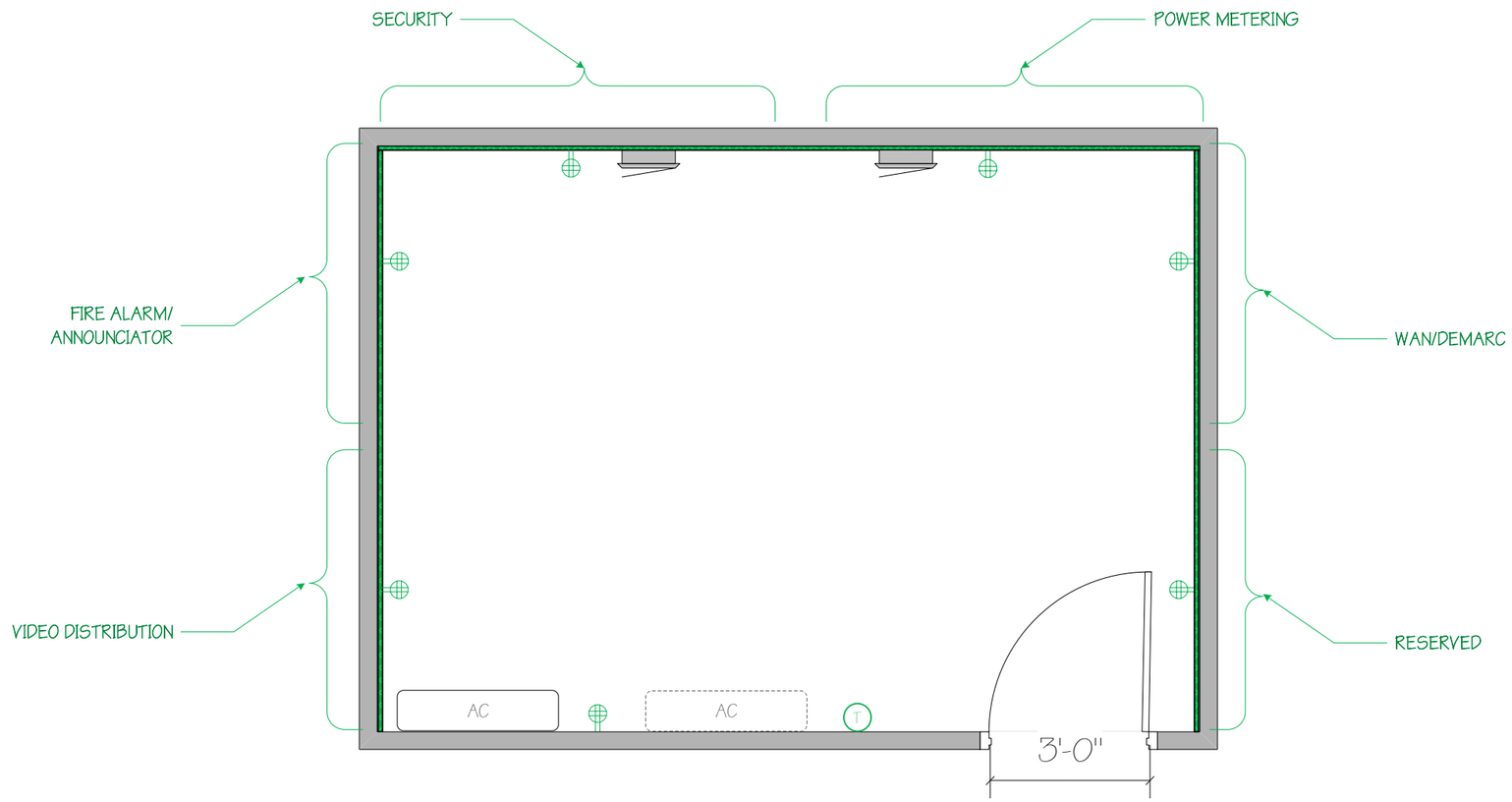

DEPARTMENT OF VETERANS AFFAIRS

OFFICE OF INFORMATION AND TECHNOLOGY

INFRASTRUCTURE OPERATIONS - APPLICATION HOSTING, CLOUD AND EDGE SOLUTIONS

ENTERPRISE DATA CENTER AND INFRASTRUCTURE ENGINEERING

EDICT
ENTERPRISE DATA CENTER INFRASTRUCTURE COLLABORATION TEAM

PROJECT:

CBOC INFORMATION TRANSPORT SYSTEMS SPECIFICATIONS

MARK	DATE	DESCRIPTION

ISSUE:

DRAWING No:	
FILE:	CBOC DESIGN TEMPLATE-v2.rtd
DESIGNED BY:	KEVIN GRZELKA, CTDC
CHECKED BY:	MICHAEL JULIAN, RCDD KELLY BATES
DOC VERSION No:	2
PRINT DATE:	May 19, 2023
ISSUE DATE:	May 17, 2023

SHEET TITLE

TYPICAL BACKBOARD RESERVATIONS

SHEET: 6 OF 20

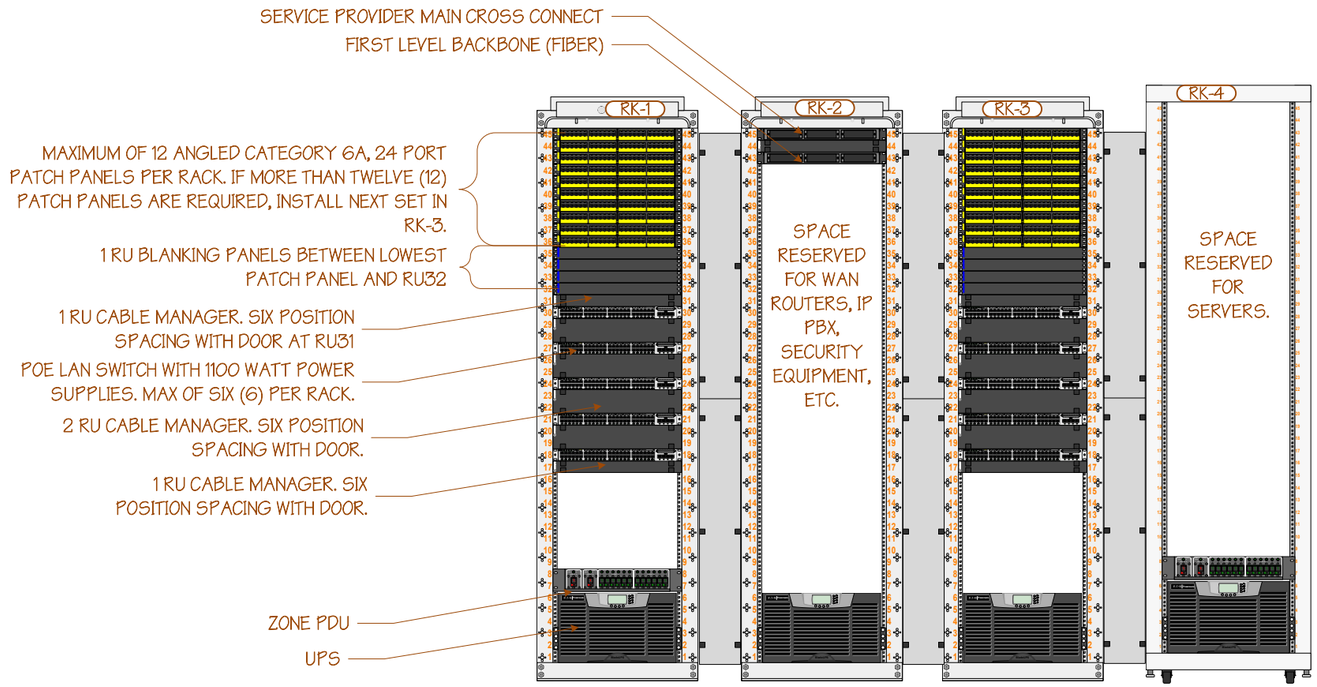

1 TYPICAL RACK ELEVATION FOR HEALTH CARE FACILITY TELECOMMUNICATIONS ROOMS

DEPARTMENT OF VETERANS AFFAIRS

OFFICE OF INFORMATION AND TECHNOLOGY

INFRASTRUCTURE OPERATIONS - APPLICATION HOSTING, CLOUD AND EDGE SOLUTIONS

ENTERPRISE DATA CENTER AND INFRASTRUCTURE ENGINEERING

EDICT
ENTERPRISE DATA CENTER INFRASTRUCTURE COLLABORATION TEAM

PROJECT:

CBOC INFORMATION TRANSPORT SYSTEMS SPECIFICATIONS

MARK	DATE	DESCRIPTION

ISSUE:

DRAWING No:	
FILE:	CBOC DESIGN TEMPLATE-v2.rvtd
DESIGNED BY:	KEVIN GRZELKA, CTDC
CHECKED BY:	MICHAEL JULIAN, RCDD KELLY BATES
DOC VERSION No:	2
PRINT DATE:	May 19, 2023
ISSUE DATE:	May 17, 2023

SHEET TITLE

TYPICAL RACK ELEVATION

SHEET: 7 OF 20

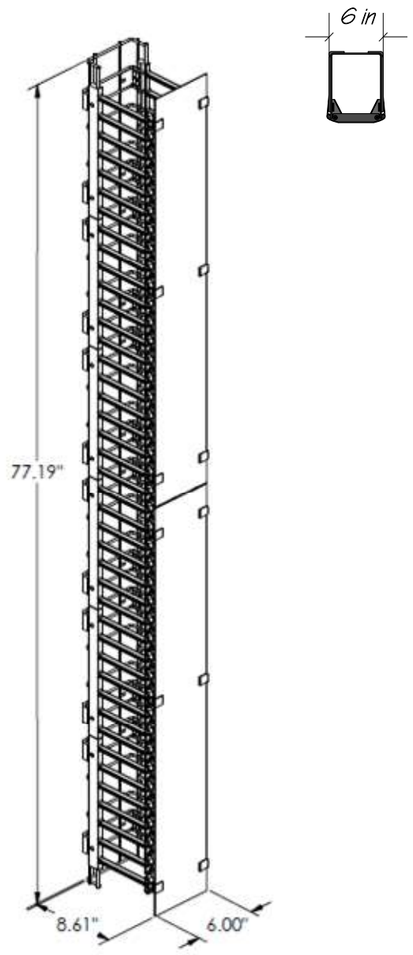

P/N: OR-MM20VMD706 (OR EQUIVALENT)

MM20 VERTICAL CABLE MANAGEMENT "CAGE", WITH DOOR, 6" X 8.61" X 7' , BLACK

CAPACITY: 350 CATEGORY 6 PATCH CORDS OR 245 CATEGORY 6A PATCH CORDS

3 6" WIDE VERTICAL CABLE MANAGEMENT

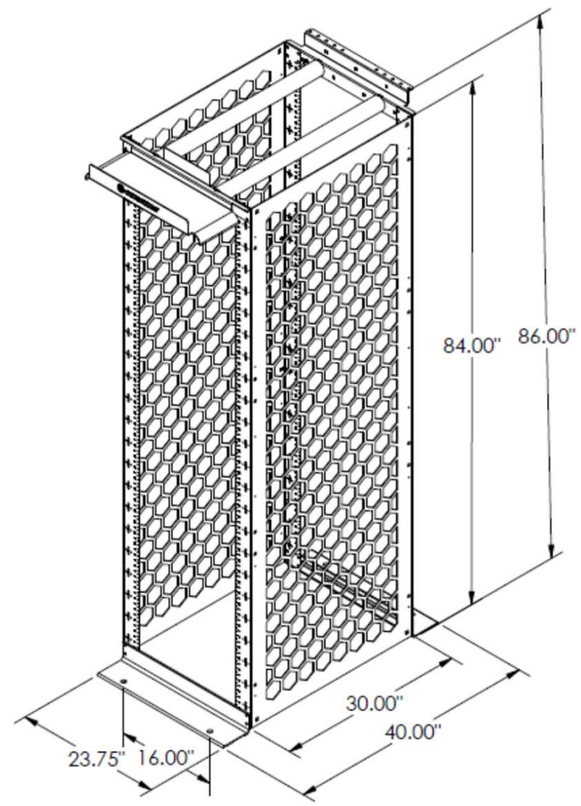

MIGHTY MO 20 CABLE MANAGEMENT RACK
30" CHANNEL DEPTH, 7' HIGH, WHITE FINISH OR EQUIVALENT

DIMENSIONS:
USABLE HEIGHT: 45RU
DEPTH (US): 30
HEIGHT (US): 7'
WIDTH (US): 23.75"
STATIC LOAD CAPACITY: 2000 LBS

SQUARE HOLE

2 TYPICAL RACK DIMENSIONS AND SPECIFICATIONS

NTS

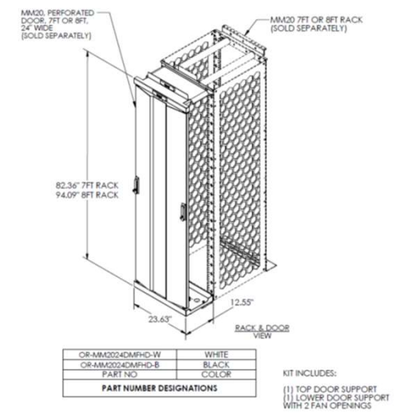

PART NO	COLOR
OR-MM2024DMFHD-W	WHITE
OR-MM2024DMFHD-B	BLACK

PART NUMBER DESIGNATIONS

SECURITY DOOR FRONT MOUNTING HARDWARE (OR-MM2024DMFHD-W) OR EQUIVALENT

4

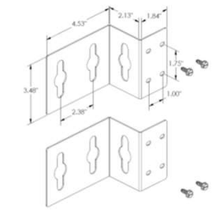

PDU MOUNTING BRACKET KIT (TWO KITS PER RACK)
P/N: OR-MM20PDUMB1D2W-W OR EQUIVALENT

6

SECURITY DOOR REAR MOUNTING HARDWARE (OR-MM2024DMRHD-W) OR EQUIVALENT

5

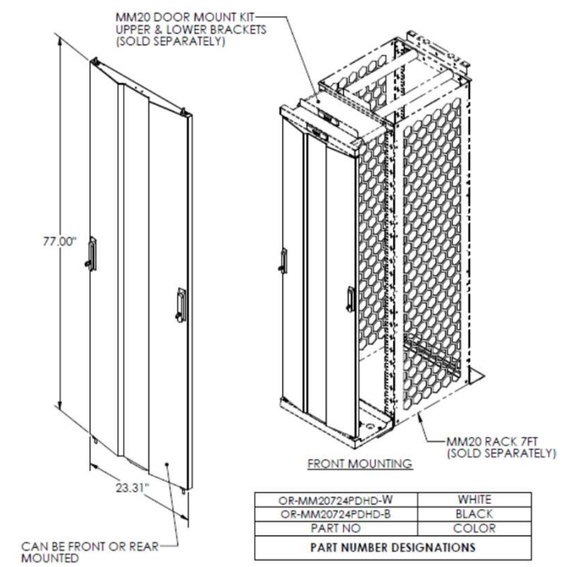

PART NO	COLOR
OR-MM20724PDHD-W	WHITE
OR-MM20724PDHD-B	BLACK

PART NUMBER DESIGNATIONS

FRONT AND REAR HEAVY DUTY PERFORATED SECURITY DOOR (OR-MM20724PDHD-W)

1

DEPARTMENT OF VETERANS AFFAIRS

OFFICE OF INFORMATION AND TECHNOLOGY

INFRASTRUCTURE OPERATIONS - APPLICATION HOSTING, CLOUD AND EDGE SOLUTIONS

ENTERPRISE DATA CENTER AND INFRASTRUCTURE ENGINEERING

EDICT
ENTERPRISE DATA CENTER INFRASTRUCTURE COLLABORATION TEAM

PROJECT:

CBOC INFORMATION TRANSPORT SYSTEMS SPECIFICATIONS

MARK	DATE	DESCRIPTION

ISSUE:

DRAWING No:	
FILE:	CBOC DESIGN TEMPLATE-v2.vsd
DESIGNED BY:	KEVIN GRZELKA, CTDC
CHECKED BY:	MICHAEL JULIAN, RCDP KELLY BATES
DOC VERSION No:	2
PRINT DATE:	May 19, 2023
ISSUE DATE:	May 17, 2023

SHEET TITLE

TYPICAL RACK DETAIL

SHEET: 8 OF 20

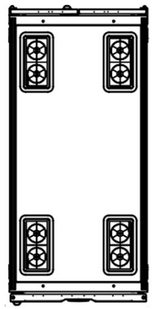

TYPICAL SERVER CABINET TOP VIEW WITH FOUR (4) BRUSHED GROMMET CABLE OPENINGS

4

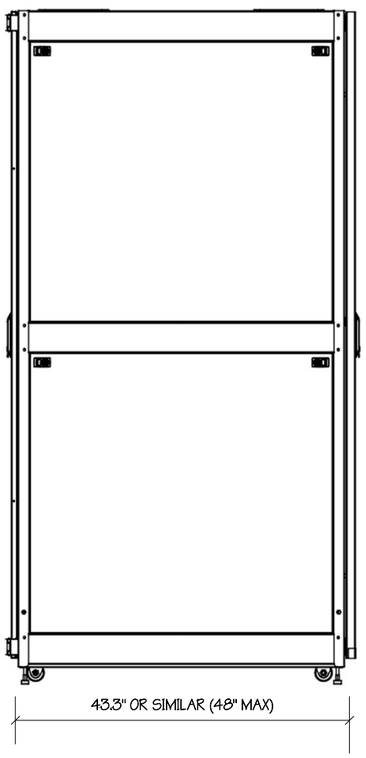

3 TYPICAL SERVER CABINET SIDE VIEW

NOTE: SERVER CABINETS MAY ONLY HOUSE SERVER AND STORAGE EQUIPMENT AND SUPPORTING PATCH PANELS. SERVER CABINETS MAY NOT HOUSE TELECOMMUNICATIONS (NETWORK) EQUIPMENT

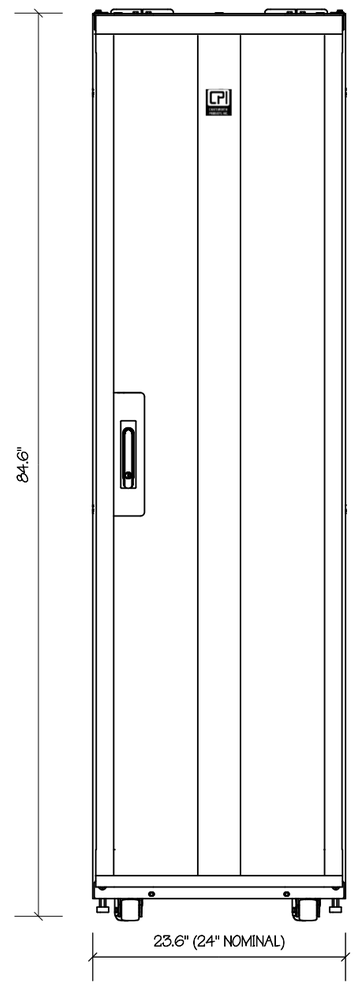

2 TYPICAL SERVER CABINET FRONT

CHATSWORTH ZETAFRAME™ CABINET (PN:ZB14-A222A-E1) OR EQUIVALENT

23.6IN(600MM)W X 43.3IN(1100MM)D X 45RMU;GLACIER WHITE;(1) CASTER ONLY KIT;(1) LEVELER ONLY KIT;(4) SQUARE PUNCHED RAILS WITH NO CABLE OPENINGS;(2) SOLID SIDE PANEL;(1) ZETAFRAME PERFORATED METAL DOOR, GLACIER WHITE;(1) SINGLE-POINT KEYED LOCK;(1) DOUBLE PERFORATED METAL DOOR;(1) THREE-POINT KEYED LOCK;(1) TOP PANEL WITH FOUR (4) BRUSH-SEALED CABLE OPENINGS;(1) BOTTOM PANEL WITH TWO (2) BRUSHED-SEALED CABLE OPENINGS ;(1) AIR DAM KIT;(1) STANDARD DUAL 2-PIECE PDU BRACKET KIT;(1) COMMON PARTS KIT, ZF, UL;(1) PACKAGING KIT

Z	1	2	3	-	4	5	6	7	8	-	9	10

1. Height

U	in	mm	
42	79.4	2017	A
45	84.6	2149	B
48	89.9	2283	C
52	96.9	2461	D

Height includes casters.

2. Width

in	mm	
23.6	600	1
27.6	700	2
29.5	750	3
31.5	800	4

3. Depth

in	mm	
31.5	800	1
39.4	1000	2
41.3	1050	3
43.3	1100	4
47.2	1200	5

Frame depth does not include doors. See detailed dimensions on page 6.

4. Doors

None	0
Single Perforated Front/ Double Perforated Rear	A
No Front/ Double Perforated Rear	B

5. Top Panel

0	None
1	Grommet-Sealed
2	Brush-Sealed

6. Side Panel

0	None
1	1 Side
2	2 Sides

7. Bottom Panel

0	None
1	Grommet-Sealed
2	Brush-Sealed

8. Thermal Management

0	None
A	Air Dam
B	Air Dam, Brushed-Sealed Rail

Brush-Sealed Front Rails are not available for 23.6"W (600 mm) cabinets.

9. Color

7	Black
E	Glacier White

10. Shipping

1	Standard Pallet
2	Shock Pallet

Shock Pallet is available for 42U, 45U, 48U cabinet heights and 43.3"D (1100 mm) and 47.2"D (1200 mm) cabinet depths.

1 TYPICAL SERVER CABINET SPECIFICATION

DEPARTMENT OF VETERANS AFFAIRS

OFFICE OF INFORMATION AND TECHNOLOGY

INFRASTRUCTURE OPERATIONS - APPLICATION HOSTING, CLOUD AND EDGE SOLUTIONS

ENTERPRISE DATA CENTER AND INFRASTRUCTURE ENGINEERING

EDICT
ENTERPRISE DATA CENTER INFRASTRUCTURE COLLABORATION TEAM

PROJECT:

CBOC INFORMATION TRANSPORT SYSTEMS SPECIFICATIONS

MARK	DATE	DESCRIPTION

ISSUE:

DRAWING No:	
FILE:	CBOC DESIGN TEMPLATE-v2.rvtd
DESIGNED BY:	KEVIN GRZELKA, CTDC
CHECKED BY:	MICHAEL JULIAN, RCDD KELLY BATES
DOC VERSION No:	2
PRINT DATE:	May 19, 2023
ISSUE DATE:	May 17, 2023

SHEET TITLE

TYPICAL CABINET DETAIL

SHEET: 9 OF 20

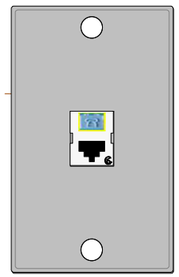

3 TYPICAL WALL MOUNT PHONE VOIP OUTLET

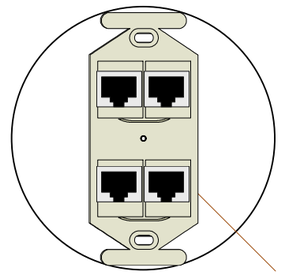

4 TYPICAL WORK FLOOR MOUNT OUTLET

NOTES:

TYPICAL WORK AREA OUTLET FACEPLATE WILL BE INSTALLED WITH CATEGORY 6A COMPONENT-COMPLIANT 8P8C MEDIA INTERFACE CONNECTORS (RJ45). EACH CONNECTOR WILL BE TERMINATED TO HIGH QUALITY CATEGORY 6A HORIZONTAL CABLING WHICH WILL TERMINATE IN THE TELECOMMUNICATIONS ROOM AS SPECIFIED ELSEWHERE IN THIS DESIGN PACKAGE.
ALL HORIZONTAL UTP SHALL BE CATEGORY 6A AND TERMINATED TO T568B.

TYPICAL FACEPLATE WILL BE INSTALLED WITH TWO RJ45s. HIGH DENSITY FACEPLATES WILL BE ISNTALLED WITH FOUR RJ45s.

FACEPLATE MATERIAL AND COLOR DETERMINED BY OTHERS.

THIS SHEET DETAILS A GENERIC FACEPLATE SPECIFICATION.

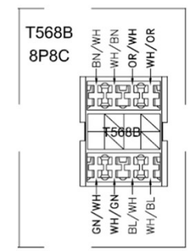

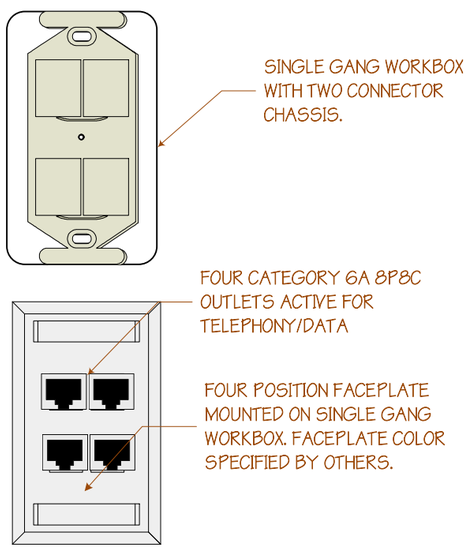

2 HIGH DENSITY WALL MOUNTED WORK AREA OUTLET CONFIGURATION

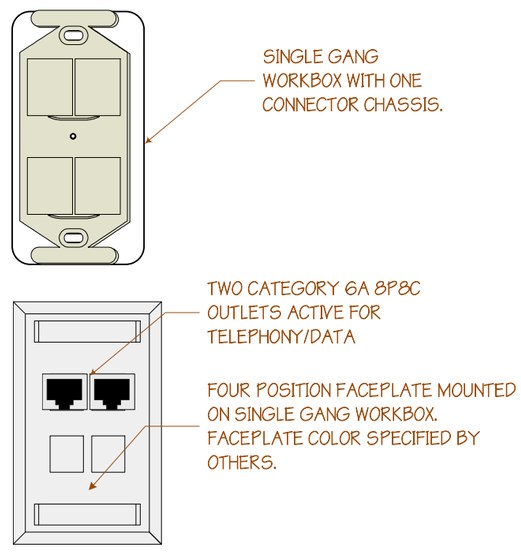

1 TYPICAL STANDARD DENSITY WALL MOUNTED WORK AREA OUTLET CONFIGURATION

ALL LABELING SHALL BE ANSI/TIA/EIA/606C COMPLIANT. BLACK LETTERING ON WHITE FIELD. MACHINE PRINTED. FURTHER GUIDANCE ON ADMINISTRATION MAY BE SPECIFIED IN OTHER SECTIONS OF THIS DESIGN PACKAGE.

DEPARTMENT OF VETERANS AFFAIRS

OFFICE OF INFORMATION AND TECHNOLOGY

INFRASTRUCTURE OPERATIONS - APPLICATION HOSTING, CLOUD AND EDGE SOLUTIONS

ENTERPRISE DATA CENTER AND INFRASTRUCTURE ENGINEERING

EDICT
ENTERPRISE DATA CENTER INFRASTRUCTURE COLLABORATION TEAM

PROJECT:

CBOC INFORMATION TRANSPORT SYSTEMS SPECIFICATIONS

MARK	DATE	DESCRIPTION

ISSUE:

DRAWING No:	
FILE:	CBOC DESIGN TEMPLATE-v2.rvtd
DESIGNED BY:	KEVIN GRZELKA, CTDC
CHECKED BY:	MICHAEL JULIAN, RCDD KELLY BATES
DOC VERSION No:	2
PRINT DATE:	May 19, 2023
ISSUE DATE:	May 17, 2023

SHEET TITLE

TYPICAL WORK AREA OUTLETS

SHEET: 10 OF 20

30 Amp 3-Phase PDU BASE UNIT – FRONT
(ZONIT ZON-C-ZPDU1)
REQUIRES TWO 30 AMP 3-PHASE (WYE) CIRCUITS
WITH L21-30R RECEPTACLES
(OR EQUIVALENT)

PDU INPUTS REQUIRE
TWO L21-30Rs

30 Amp 3-Phase PDU BASE UNIT – REAR
FOUR (4) L21-20R
SIX (6) NEMA 5-15/20 T-SLOT
(OR EQUIVALENT)

NOTE: THE CORRECT SPECIFICATION FOR THE PDU IS TO FEED IT WITH A TWO POWER SOURCES. POWER INPUTS SHOULD ORIGINATE FROM TWO INDEPENDENT POWER SOURCES. EACH INPUT WILL USE IDENTICAL SPECS: WYE (5-WIRE) CONFIGURED, 208V, 30A, THREE-PHASE, TERMINATING IN A NEMA L21-30R LOCKING RECEPTACLE. THE NEUTRAL CONDUCTOR SHOULD BE UPSIZED ONE GAUGE TO MATCH THE UPSIZED NEUTRAL CONDUCTORS IN THE PDU UNITS. THE NEUTRAL "UPSIZING" SHOULD IDEALLY BE CONTINUED IN THE POWER DISTRIBUTION SYSTEM BACK TO THE UPS OR TRANSFORMER WINDING POLE. THIS INCREASES THE EFFICIENCY OF THE POWER DISTRIBUTION SYSTEM AND SUPPRESSES HARMONICS IN THE SYSTEM.

5 TYPICAL ZONE PDU UNIT WITH REAR DETAIL AND ADAPTORS REQUIRED FOR VERTICAL PDU

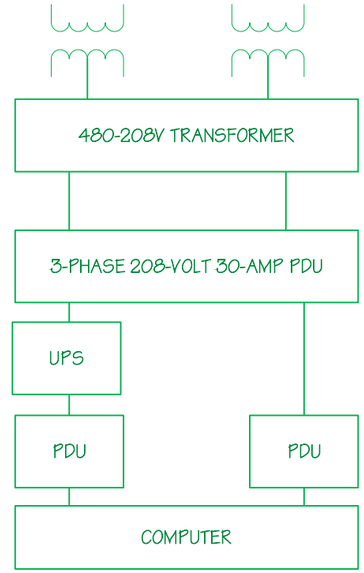

2 NOTIONAL POWER SCHEMATIC FOR INFORMATION ONLY – NOT FOR CONSTRUCTION

APC AP9560 OR EQUIVALENT RACK MOUNT PDU; L5-30 PLUG; (10) NEMA 5-20 OUTLETS; 1 RU;
TWO PER ENCLOSURE; ONE ENERGIZED BY UPS; ONE ENERGIZED BY WALL OUTLET

REQUIRES ONE L5-30R

NOTE: USED IN TELECOMMUNICATIONS ENCLOSURES ONLY

4 120 Volt PDU FOR PLACEMENT AS NEEDED

APC AP8861 RPDU OR EQUIVALENT; RACK PDU 2G, METERED; L21-20 PLUG;
THREE PHASE; 120/208V INPUT; 20A; ZERO U,
5.7 KW, 208V, (36) C13 & (6) C19 & (2) 5-20 OUTLETS; FOR USE IN
TELECOMMUNCIATION ROOMS AND LOCATIONS WITH LEGACY 110V ONLY
EQUIPMENT

REQUIRES ONE (1) L21-
20R

3 208 VOLT PDU FOR EQUIPMENT POWER – TO BE ENERGIZED BY ZONE PDU

NOTE: THIS DESIGN PROVIDES DIVERSE POWER INPUTS FOR ACTIVE EQUIPMENT BY SPLITTING THE SOURCE POWER ACROSS TWO INPUTS ON THE ZONE PDU. EACH INPUT WILL SUPPORT TWO EQUIPMENT-FACING PDUs. EACH SERVER CABINET WILL CONTAIN A MINIMUM OF TWO EQUIPMENT-FACING PDUs – EACH WILL BE ENERGIZED BY SEPARATE ZONE PDU INPUTS.

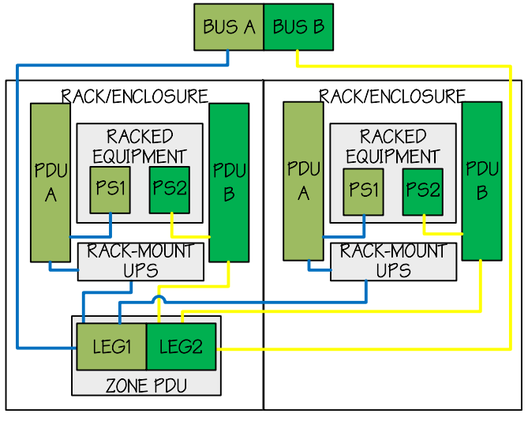

ONE ZONE PDU FOR TWO
SERVER CABINETS/
NETWORK RACKS

1 POWER SCHEMATIC FOR POWER RACK- LEVEL REDUNDANCY

DEPARTMENT OF VETERANS AFFAIRS

OFFICE OF INFORMATION AND TECHNOLOGY

INFRASTRUCTURE OPERATIONS - APPLICATION HOSTING, CLOUD AND EDGE SOLUTIONS

ENTERPRISE DATA CENTER AND INFRASTRUCTURE ENGINEERING

EDICT
ENTERPRISE DATA CENTER INFRASTRUCTURE COLLABORATION TEAM

PROJECT:

CBOC INFORMATION TRANSPORT SYSTEMS SPECIFICATIONS

MARK	DATE	DESCRIPTION

ISSUE:

DRAWING No:	
FILE:	CBOC DESIGN TEMPLATE-v2.rvtd
DESIGNED BY:	KEVIN GRZELKA, CTDC
CHECKED BY:	MICHAEL JULIAN, RCDD KELLY BATES
DOC VERSION No:	2
PRINT DATE:	May 19, 2023
ISSUE DATE:	May 17, 2023

SHEET TITLE

TYPICAL RACK POWER DISTRIBUTION

SHEET: 11 OF 20

SIDE A
REQUIRES A 208V, 60A, THREE-PHASE CIRCUIT, TERMINATING IN A HARD-WIRED JUNCTION BOX.

SIDE B
REQUIRES A 208V, 60A, THREE-PHASE CIRCUIT, TERMINATING IN A HARD-WIRED JUNCTION BOX

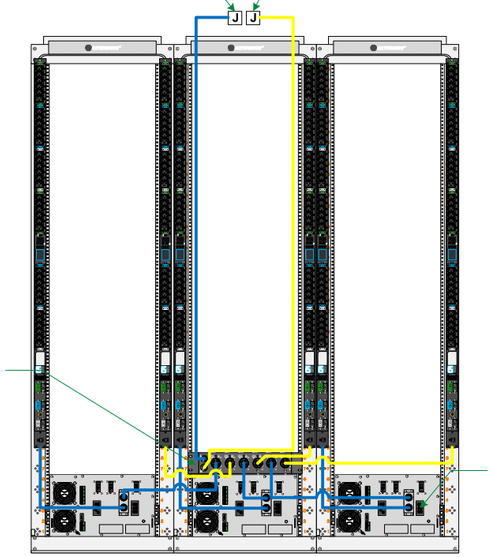

ZONE PDU
60A 3-PHASE ZONE PDU BASE UNIT – REQUIRES TWO 60A 3-PHASE (WYE) CIRCUITS HARD-WIRED IN JUNCTION BOX; OPTIONALLY, UPSs AND B-SIDE rPDUs MAY BE POWERED DIRECTLY WITH L21-20 OUTLETS

RACK-MOUNTED 5 KW, 208V UNINTERRUPTIBLE POWER SUPPLY (UPS) WITH NEMA 20A L21-20P INPUT AND L21-20R OUTPUT

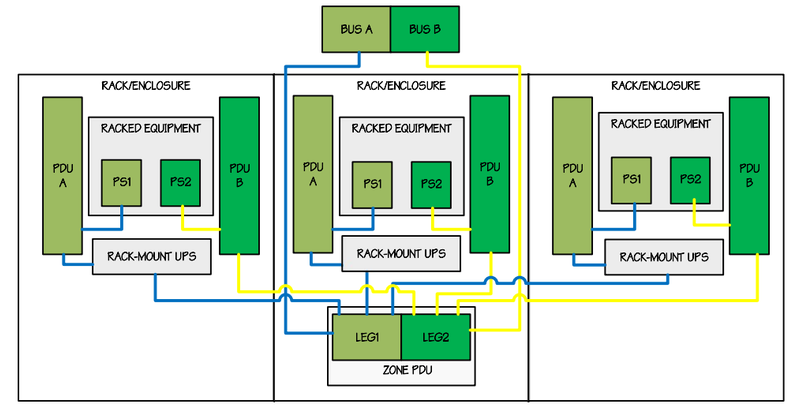

3 POWER ELEVATION AND SCHEMATIC FOR A THREE RACK TR

L21-30P SIDE A
REQUIRES A 208V, 30A, THREE-PHASE CIRCUIT, TERMINATING IN A NEMA L21-30R LOCKING RECEPTACLE.

L21-30P SIDE B
REQUIRES A 208V, 30A, THREE-PHASE CIRCUIT, TERMINATING IN A NEMA L21-30R LOCKING RECEPTACLE.

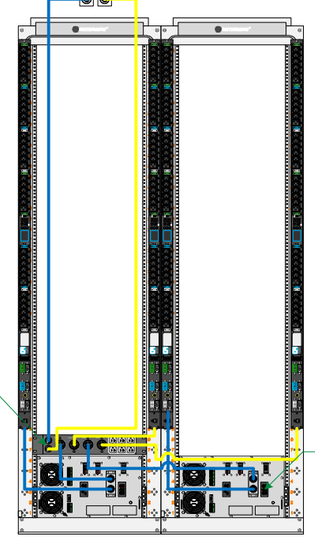

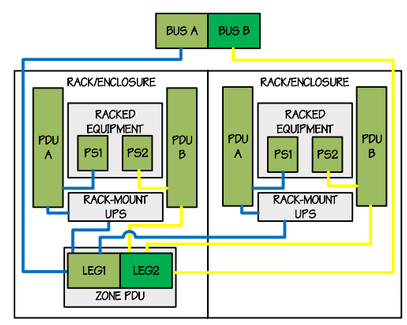

ZONE PDU
30A 3-PHASE ZONE PDU BASE UNIT – REQUIRES TWO 30A 3-PHASE (WYE) CIRCUITS WITH L21-30R RECEPTACLES; OPTIONALLY, UPSs AND B-SIDE rPDUs MAY BE POWERED DIRECTLY WITH L21-20 OUTLETS

RACK-MOUNTED 5 KW, 208V UNINTERRUPTIBLE POWER SUPPLY (UPS) WITH NEMA 20A L21-20P INPUT AND L21-20R OUTPUT

2 POWER ELEVATION AND SCHEMATIC FOR A TWO RACK TR

L21-20P SIDE A
REQUIRES A 208V, 20A, THREE-PHASE CIRCUIT, TERMINATING IN A NEMA L21-20R LOCKING RECEPTACLE.

L21-20P SIDE B
REQUIRES A 208V, 20A, THREE-PHASE CIRCUIT, TERMINATING IN A NEMA L21-20R LOCKING RECEPTACLE.

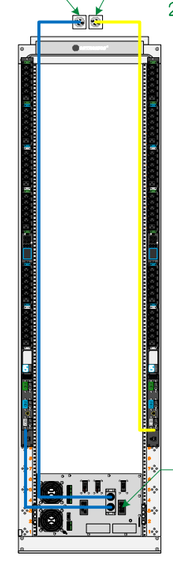

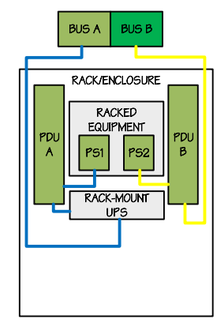

RACK-MOUNTED 5 KW, 208V UNINTERRUPTIBLE POWER SUPPLY (UPS) WITH NEMA 20A L21-20P INPUT AND L21-20R OUTPUT

1 POWER ELEVATION AND SCHEMATIC FOR A ONE RACK TR

DEPARTMENT OF VETERANS AFFAIRS

OFFICE OF INFORMATION AND TECHNOLOGY

INFRASTRUCTURE OPERATIONS - APPLICATION HOSTING, CLOUD AND EDGE SOLUTIONS

ENTERPRISE DATA CENTER AND INFRASTRUCTURE ENGINEERING

EDICT
ENTERPRISE DATA CENTER INFRASTRUCTURE COLLABORATION TEAM

PROJECT:

CBOC INFORMATION TRANSPORT SYSTEMS SPECIFICATIONS

MARK	DATE	DESCRIPTION

ISSUE:

DRAWING No:	
FILE:	CBOC DESIGN TEMPLATE-v2.rvtd
DESIGNED BY:	KEVIN GRZELKA, CTDC
CHECKED BY:	MICHAEL JULIAN, RCDD KELLY BATES
DOC VERSION No:	2
PRINT DATE:	May 19, 2023
ISSUE DATE:	May 17, 2023

SHEET TITLE

POWER DISTRIBUTION (1-3 RACK TR)

SHEET: 12 OF 20

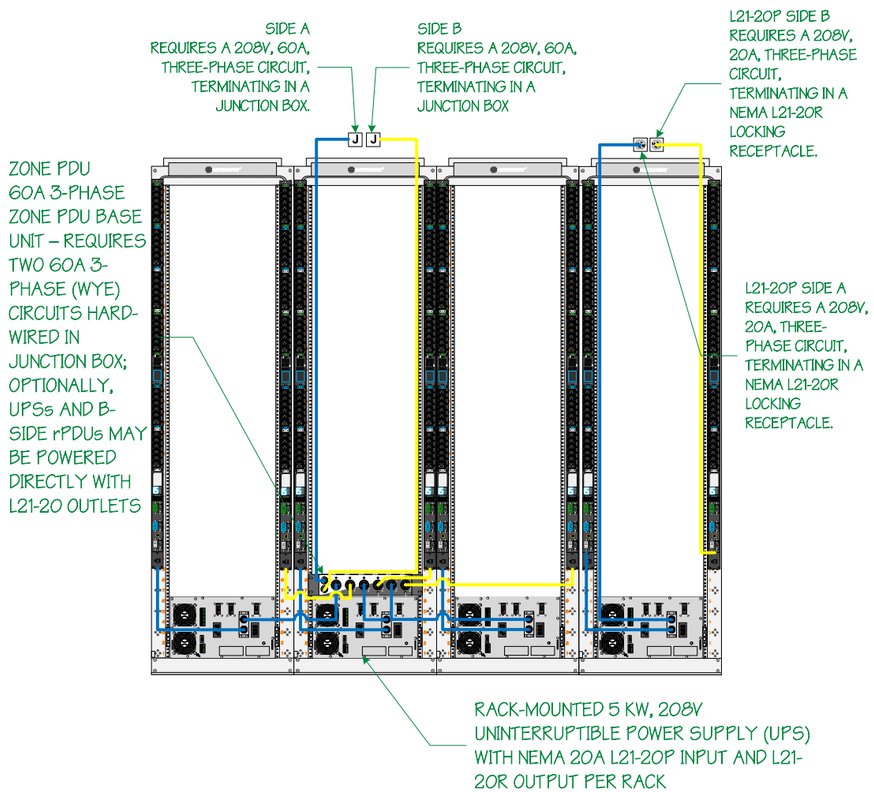

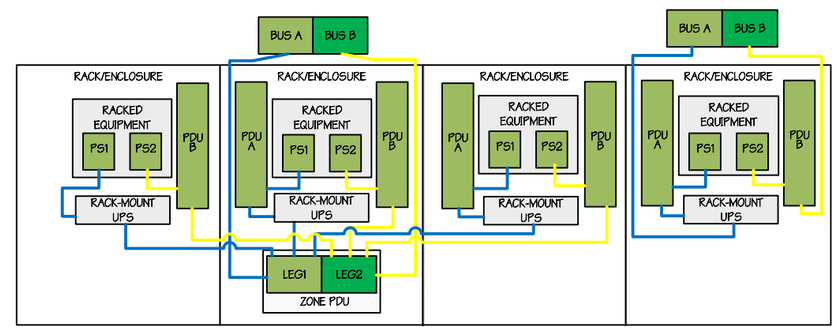

ONE ZONE PDU
60A 3-PHASE ZONE PDU BASE UNIT – REQUIRES TWO 60A 3-PHASE (WYE) CIRCUITS HARD-WIRED IN JUNCTION BOX TO SUPPORT THREE RACKS

REQUIRES TWO 20A 3-PHASE (WYE) CIRCUITS TERMINATING IN L21-20Rs

1 POWER ELEVATION AND SCHEMATIC FOR A FOUR RACK TR

DEPARTMENT OF VETERANS AFFAIRS

OFFICE OF INFORMATION AND TECHNOLOGY

INFRASTRUCTURE OPERATIONS - APPLICATION HOSTING, CLOUD AND EDGE SOLUTIONS

ENTERPRISE DATA CENTER AND INFRASTRUCTURE ENGINEERING

EDICT
ENTERPRISE DATA CENTER INFRASTRUCTURE COLLABORATION TEAM

PROJECT:

CBOC INFORMATION TRANSPORT SYSTEMS SPECIFICATIONS

MARK	DATE	DESCRIPTION

ISSUE:

DRAWING No:	
FILE:	CBOC DESIGN TEMPLATE-v2.rvtd
DESIGNED BY:	KEVIN GRZELKA, CTDC
CHECKED BY:	MICHAEL JULIAN, RCDD KELLY BATES
DOC VERSION No:	2
PRINT DATE:	May 19, 2023
ISSUE DATE:	May 17, 2023

SHEET TITLE

POWER DISTRIBUTION (4 RACK TR)

SHEET: 13 OF 20

NOTES: ALL GROUNDING SHALL BE DONE IN ACCORDANCE WITH ANSI/TIA-607-D "COMMERCIAL BUILDING GROUNDING (EARTHING) AND BONDING REQUIREMENTS FOR TELECOMMUNICATIONS", NFPA 70, AND IN COMPLIANCE WITH LOCAL CODES.

ALL EQUIPMENT SHALL BE GROUNDED PER MANUFACTURER'S INSTRUCTIONS.

NETWORK EQUIPMENT MUST BE GROUNDED. NEVER DEFEAT THE GROUND CONDUCTOR OR OPERATE THE EQUIPMENT IN THE ABSENCE OF A SUITABLY INSTALLED GROUND CONDUCTOR. THESE DEVICES WILL BE BONDED TO THE RACK BONDING BUSBAR (RBB) IN THE SAME RACK. EACH DEVICE WILL HAVE A DEDICATED UNIT BONDING CONDUCTOR (UBC). THE UBC WILL NOT BE SHARED.

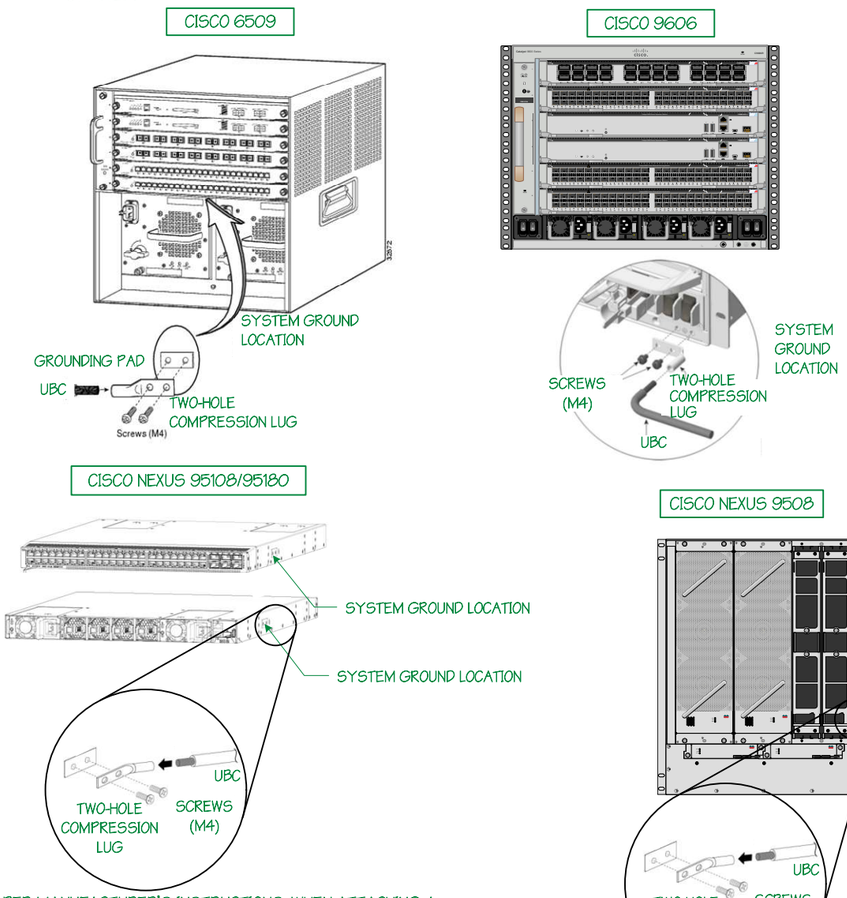

PER MANUFACTURER'S INSTRUCTIONS, WHEN ATTACHING A GROUNDING CABLE TO THE CHASSIS, YOU WILL NEED TO BEND ONE OF THE RACK-MOUNT RAILS SLIGHTLY TO ALLOW THE GROUNDING LUG TO GO BEHIND THE RAIL. ONLY ONE SIDE OF THE CHASSIS NEEDS TO BE BONDED.

2 EARTHING EXAMPLES
Ref: CISCO PRODUCT INSTALLATION GUIDE

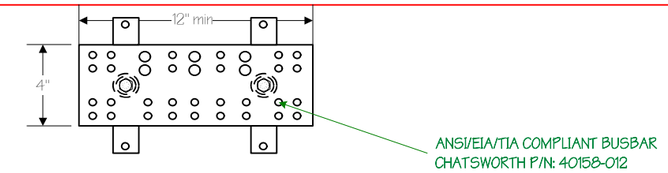

3 TELECOMMUNICATIONS SECONDARY BONDING BUSBAR (SBB)

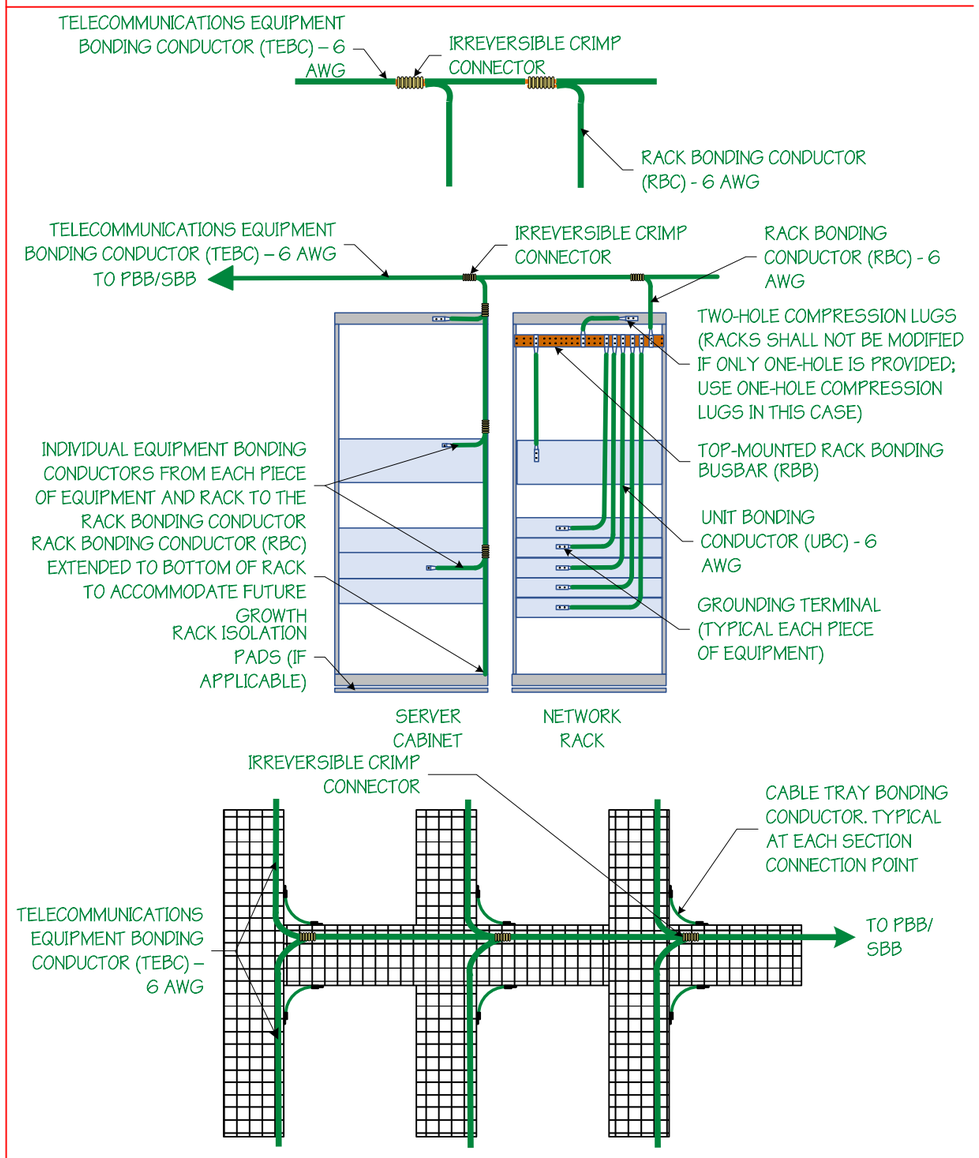

1 PATHWAY, RACK, BONDING CONDUCTOR JOIN REQUIREMENTS

DEPARTMENT OF VETERANS AFFAIRS

OFFICE OF INFORMATION AND TECHNOLOGY

INFRASTRUCTURE OPERATIONS - APPLICATION HOSTING, CLOUD AND EDGE SOLUTIONS

ENTERPRISE DATA CENTER AND INFRASTRUCTURE ENGINEERING

EDICT
ENTERPRISE DATA CENTER INFRASTRUCTURE COLLABORATION TEAM

PROJECT:

CBOC INFORMATION TRANSPORT SYSTEMS SPECIFICATIONS

MARK	DATE	DESCRIPTION

ISSUE:

DRAWING No:	
FILE:	CBOC DESIGN TEMPLATE-v2.vsd
DESIGNED BY:	KEVIN GRZELKA, CTDC
CHECKED BY:	MICHAEL JULIAN, RCDD KELLY BATES
DOC VERSION No:	2
PRINT DATE:	May 19, 2023
ISSUE DATE:	May 17, 2023

SHEET TITLE

BONDING

SHEET: 14 OF 20

- RACK = RK1 THROUGH RK4. LABELED LEFT TO RIGHT WHEN LOOKING AT THE FRONT OF THE RACK. APPLIES TO RACKS AND CABINETS.
- UTP PATCH PANEL = CPL-RACK NAME-01 THROUGH 45. EXAMPLE: CPL-RK1-01 FOR THE PANEL LOCATED IN RACK UNIT #1 IN RACK #1.
- UTP PATCH PANEL POSITION = PANEL ID.01 THROUGH 24. EXAMPLE CPL-RK1-01.01
- FIBER DISTRIBUTION PANEL = FDP-RACK NAME-01 THROUGH 45. EXAMPLE: FDP-RK1-01 FOR THE PANEL IN RACK UNIT #1 RACK #1.
- FIBER DISTRIBUTION CASSETTE = FDC-RACK NAME-01 THROUGH 45.1 THROUGH 3. EXAMPLE: FDC-RK1-01.1 FOR THE CASSETTE IN POSITION #1 IN PANEL LOCATED IN RACK UNIT #1 IN RACK #1.
- UTP PATCH CORDS = CCA[SOURCE.PORT]/[DESTINATION.PORT]. EXAMPLE CCA[CPL-RK1-01.01]/[CPL-RK2-02.02] AS A PATCH CORD CONNECTING PORT #1 IN THE COPPER PATCH PANEL LOCATED IN RACK #1, RACK UNIT #1 WITH PORT 2 LOCATED IN RACK 2, RACK UNIT #2.
- FIBER PATCH CORDS = FCA[SOURCE.PORT]/[DESTINATION.PORT]. EXAMPLE FCA[FDP-RK1-01.01.01]/[FDP-RK2-02.02.02] AS A PATCH CORD CONNECTING PORT #1 IN THE FIBER PATCH PANEL LOCATED IN RACK #1, RACK UNIT #1 WITH PORT 2 LOCATED IN RACK 2, RACK UNIT #2.
- FACEPLATE = TR ROOM NUMBER-PATCH PANEL ID.PORT. EXAMPLE. 1A-CPL-RK1-01.1 FOR TELECOMMUNICATIONS ROOM 1, UTP PANEL IN RACK #1, RACK UNIT #1, PORT POSITION #1.

1 EXAMPLE INSIDE PLANT LABELING REQUIREMENTS

DEPARTMENT OF VETERANS AFFAIRS

OFFICE OF INFORMATION AND TECHNOLOGY

INFRASTRUCTURE OPERATIONS - APPLICATION HOSTING, CLOUD AND EDGE SOLUTIONS

ENTERPRISE DATA CENTER AND INFRASTRUCTURE ENGINEERING

EDICT
ENTERPRISE DATA CENTER INFRASTRUCTURE COLLABORATION TEAM

PROJECT:

CBOC INFORMATION TRANSPORT SYSTEMS SPECIFICATIONS

MARK	DATE	DESCRIPTION

ISSUE:

DRAWING No:	
FILE:	CBOC DESIGN TEMPLATE-v2.vsd
DESIGNED BY:	KEVIN GRZELKA, CTDC
CHECKED BY:	MICHAEL JULIAN, RCDP KELLY BATES
DOC VERSION No:	2
PRINT DATE:	May 19, 2023
ISSUE DATE:	May 17, 2023

SHEET TITLE

CBOC ITS NAMING STANDARDS

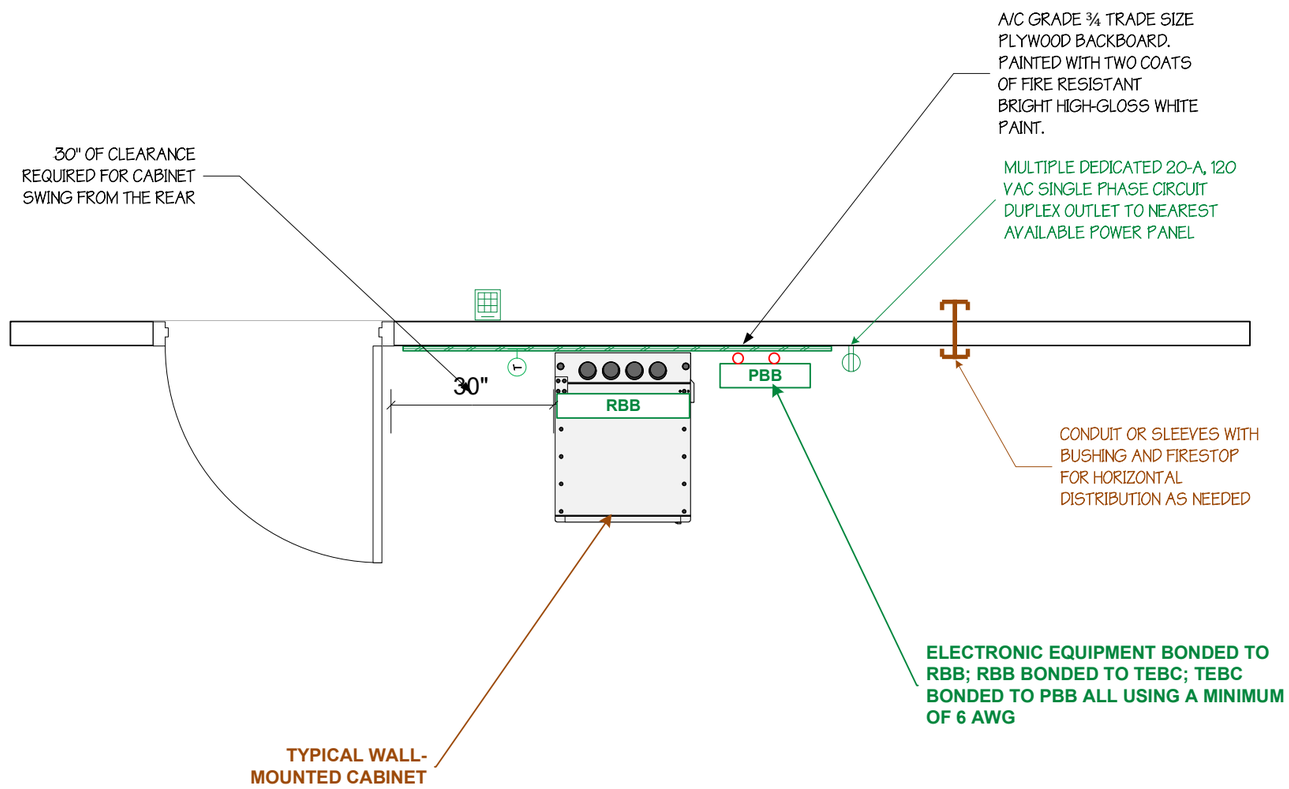

1 TYPICAL TOP-DOWN VIEW
NTS

DEPARTMENT OF VETERANS AFFAIRS

OFFICE OF INFORMATION AND TECHNOLOGY

INFRASTRUCTURE OPERATIONS - APPLICATION HOSTING, CLOUD AND EDGE SOLUTIONS

ENTERPRISE DATA CENTER AND INFRASTRUCTURE ENGINEERING

EDICT
ENTERPRISE DATA CENTER INFRASTRUCTURE COLLABORATION TEAM

PROJECT:

CBOC INFORMATION TRANSPORT SYSTEMS SPECIFICATIONS

MARK	DATE	DESCRIPTION

ISSUE:

DRAWING No:	
FILE:	CBOC DESIGN TEMPLATE-v2.rvtd
DESIGNED BY:	KEVIN GRZELKA, CTDC
CHECKED BY:	MICHAEL JULIAN, RCDD KELLY BATES
DOC VERSION No:	2
PRINT DATE:	May 19, 2023
ISSUE DATE:	May 17, 2023

SHEET TITLE

TELECOMMUNICATIONS ENCLOSURE (TOP VIEW)

SHEET: 16 OF 20

LOCKING 120 VOLT 30 AMP OUTLETS (L5-30) ON THE WALL BEHIND THE RACK ALIGNED WITH THE CUTOUT ON THE ENCLOSURE. ONE OUTLET ASSIGNED TO PDU. ONE OUTLET ASSIGNED TO UPS. EACH ENERGIZED BY SEPARATE ONE-POLE 30 AMP BREAKERS.

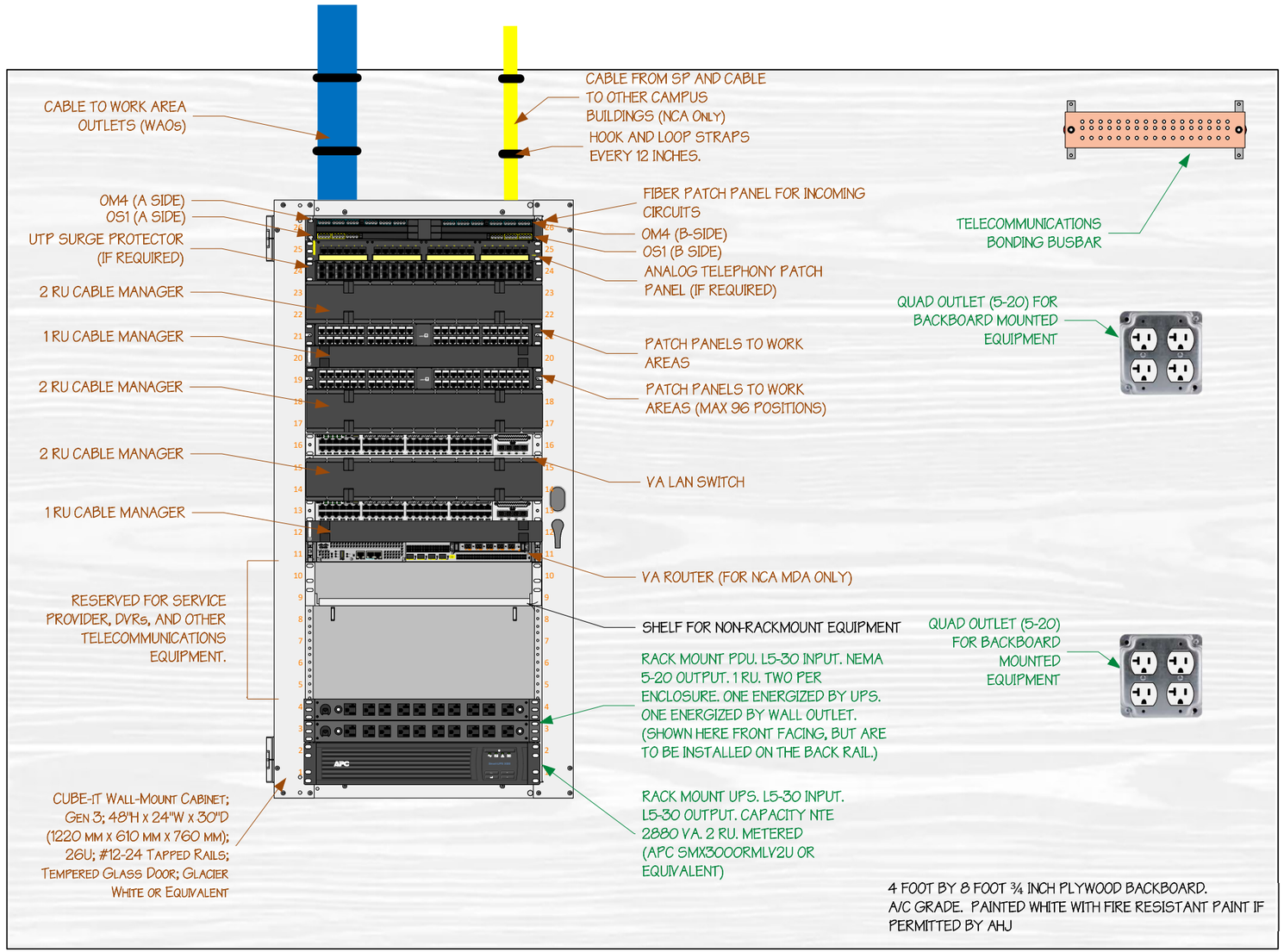

1 ELEVATION FOR TELECOMMUNICATIONS ENCLOSURE

DEPARTMENT OF VETERANS AFFAIRS

OFFICE OF INFORMATION AND TECHNOLOGY

INFRASTRUCTURE OPERATIONS - APPLICATION HOSTING, CLOUD AND EDGE SOLUTIONS

ENTERPRISE DATA CENTER AND INFRASTRUCTURE ENGINEERING

EDICT
ENTERPRISE DATA CENTER INFRASTRUCTURE COLLABORATION TEAM

PROJECT:

CBOC INFORMATION TRANSPORT SYSTEMS SPECIFICATIONS

MARK	DATE	DESCRIPTION

ISSUE:

DRAWING No:	
FILE:	CBOC DESIGN TEMPLATE-v2.rvtd
DESIGNED BY:	KEVIN GRZELKA, CTDC
CHECKED BY:	MICHAEL JULIAN, RCDD KELLY BATES
DOC VERSION No:	2
PRINT DATE:	May 19, 2023
ISSUE DATE:	May 17, 2023

SHEET TITLE

TELECOMMUNICATIONS ENCLOSURE (ELEVATION VIEW)

SHEET: 17 OF 20

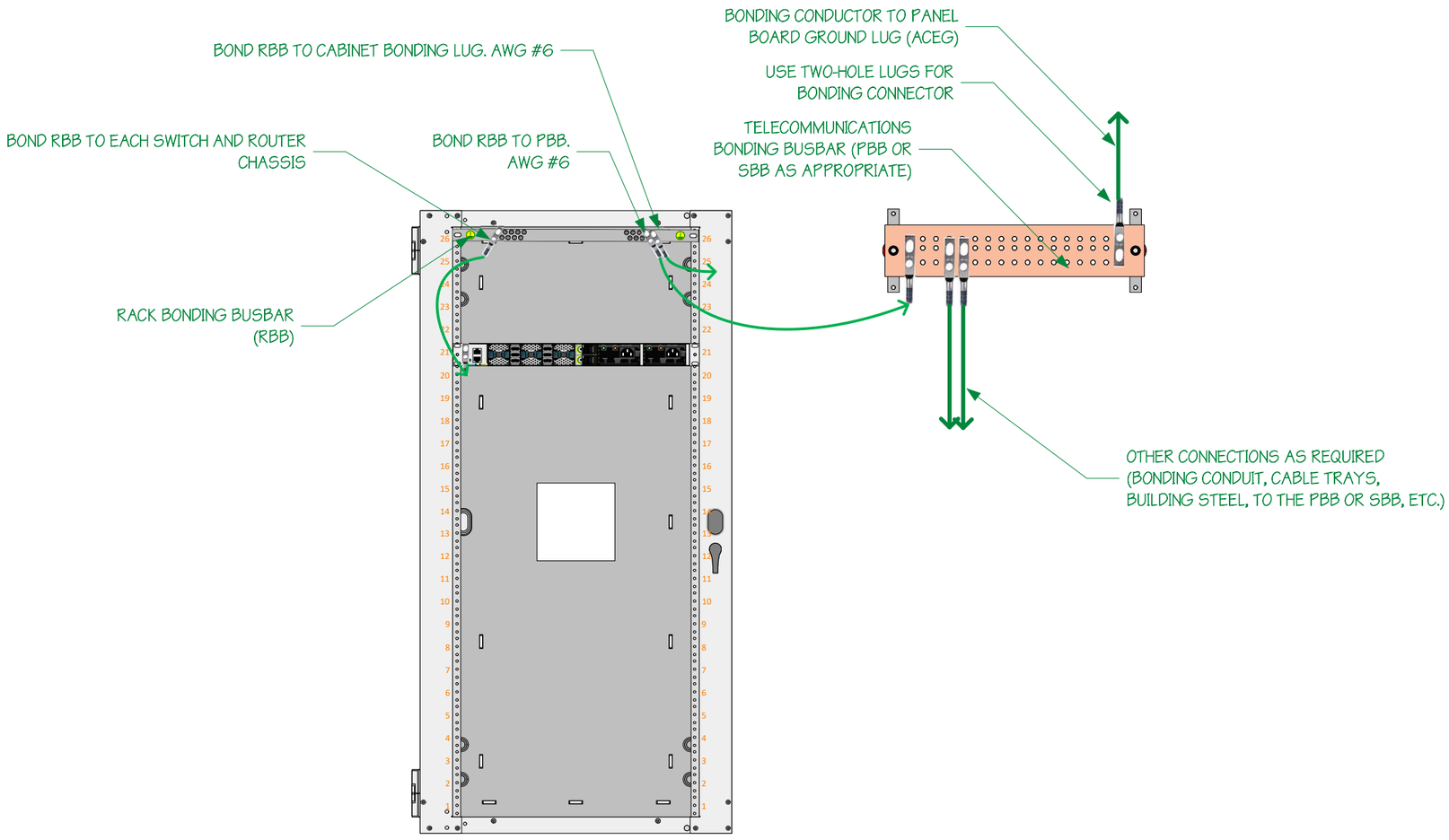

1 BONDING TOPOLOGY FOR TELECOMMUNICATIONS ENCLOSURES

DEPARTMENT OF VETERANS AFFAIRS

OFFICE OF INFORMATION AND TECHNOLOGY

INFRASTRUCTURE OPERATIONS - APPLICATION HOSTING, CLOUD AND EDGE SOLUTIONS

ENTERPRISE DATA CENTER AND INFRASTRUCTURE ENGINEERING

EDICT
ENTERPRISE DATA CENTER INFRASTRUCTURE COLLABORATION TEAM

PROJECT:

CBOC INFORMATION TRANSPORT SYSTEMS SPECIFICATIONS

MARK	DATE	DESCRIPTION

ISSUE:

DRAWING No:	
FILE:	CBOC DESIGN TEMPLATE-v2.rvtd
DESIGNED BY:	KEVIN GRZELKA, CTDC
CHECKED BY:	MICHAEL JULIAN, RCDD KELLY BATES
DOC VERSION No:	2
PRINT DATE:	May 19, 2023
ISSUE DATE:	May 17, 2023

SHEET TITLE

TELECOMMUNICATIONS ENCLOSURE (ELEVATION)

SHEET: 18 OF 20

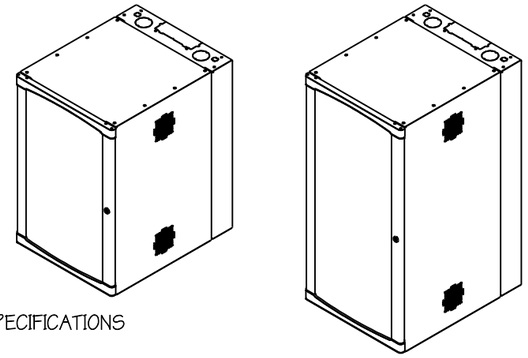

SPECIFICATIONS

DESCRIPTION:
WALL-MOUNT ENCLOSURE WITH LOCKABLE FRONT DOOR AND SWING-OUT REAR ACCESS TO EQUIPMENT. TEMPERED GLASS FRONT DOOR.

26RU:
CUBE-IT WALL-MOUNT CABINET; GEN 3; 48"H X 24"W X 30"D (1220 MM X 610 MM X 760 MM); 26U; #12-24 TAPPED RAILS; TEMPERED GLASS DOOR; GLACIER WHITE. 12419-E48 CUBE-IT OR EQUIVALENT

12RU:
CUBE-IT WALL-MOUNT CABINET; GEN 3; 24"H X 24"W X 30"D (610 MM X 610 MM X 760 MM); 12U; #12-24 TAPPED RAILS; TEMPERED GLASS DOOR; GLACIER WHITE. 12419-E24 CUBE-IT OR EQUIVALENT.

USE:
FOR INDOOR USE ONLY, IN ENVIRONMENTALLY CONTROLLED AREAS; MAY NOT BE USED OUTDOORS, IN HARSH ENVIRONMENTS, OR IN AIR-HANDLING SPACES
SIZE:
- HEIGHT: 48" (1220 MM)
- WIDTH: 24" (610 MM); 19" EIA RACK-MOUNT
- DEPTH: 30" (760 MM)

INTERIOR:
- HEIGHT: 26U
- WIDTH: 19" EIA RACK-MOUNT
- THREADED #12-24 EQUIPMENT MOUNTING HOLES
- 19"W, EIA-310-D COMPLIANT
- FAN ASSEMBLIES WITH FILTER KITS

4 SPECIFICATIONS

Cable Port Brush Kit for CUBE-iT Wall-Mount Cabinet
- Optional cover when rectangular knockout on the rear panel is removed
- Seals opening around cables with brush seal
- Sold in pairs

Part Number	Description	Shipping Weight lb (kg)
25190-000	0.8"H x 10.6"W x 2.9"D (20 mm x 268 mm x 74 mm)	2 (0.9)

3 BRUSH KIT (ONE PER CABINET)

Equipment Mounting Rail Kit for CUBE-iT Wall-Mount Cabinet
- Use with equipment that needs front and rear support
- Sold in pairs
- Aluminum material

Part Number	Description	Shipping Weight lb (kg)
12787-524	12U; For 24"H (610 mm) cabinet	4 (1.8)
12787-536	19U; For 36"H (910 mm) cabinet	6 (2.7)
12787-548	26U; For 48"H (1220 mm) cabinet	8 (3.6)

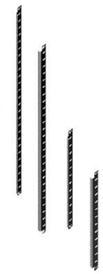

9 FRONT AND REAR RAIL KIT

Low-Decibel Dual-Fan and Filter Kit for CUBE-iT Wall-Mount Cabinet
- Pressurizes interior of the cabinet, forcing warm air out of open vents
- Assembly includes 2 fans and 2 filters
- Noise Level: 31 dB (measured at 3' (1 m) distance)
- Recommended placement on bottom right and left sides of the cabinet
- Airflow: 120 CFM (204 CMH)
- 50/16 Hz
- 6'L (1.8 m) NEMA 5-15P/6-15P Power Cord

Part Number	Description	Shipping Weight lb (kg)
40975-001	115 Volt, 5-15P power cord	4 (1.8)
40975-002	230 Volt, 6-15P Power cord	4 (1.8)

7 FAN KIT QTY 1 PER CABINET

Replacement Filter Kit for CUBE-iT Wall-Mount Cabinet
- Compatible with Low-Decibel Dual-Fan and Standard Fan kits

Part Number	Description	Shipping Weight lb (kg)
40973-001	Pack of 5	2 (0.9)

LED Light Kit for CUBE-iT Cabinets
- Attaches to the bottom, top or side of CUBE-iT Cabinets
- Toggle switch, 4W LED light
- Detachable, 120 VAC with NEMA 1-15P Power Cord

Part Number	Description	Shipping Weight lb (kg)
12803-701	LED Light Kit, 4W, 120 Vac	2 (0.9)

8 FAN FILTER KIT AND LIGHT KIT (ONE PER CABINET).

- FOR USE WITH SMALL EQUIPMENT SUCH AS MODEMS, ROUTERS AND FIBER MODULES IN 19" EIA RACKS
- 1U; INCLUDES MULTIPLES TIE-DOWN POINTS
- SUPPORTS UP TO 20 LB (9.1 KG) OF EQUIPMENT

5 SHELF (TWO PER CABINET)

Vertical Cabling Section for CUBE-iT Wall-Mount Cabinet
- Attaches to the outside edge of equipment mounting rails
- 4U height; openings align with rack-mount unit spaces on equipment mounting rails
- Sold in pairs
- Order additional kits as-needed per cable management requirements

Part Number	Description	Shipping Weight lb (kg)
40970-704	4U, 7"H x 0.5"D (178 mm x 13 mm)	3 (1.4)
40970-707	7U, 12.3"H x 0.5"D (311 mm x 13 mm)	3 (1.4)
40970-711	11U, 19.3"H x 0.5"D (489 mm x 13 mm)	4 (1.8)

Color is black.

2 VERTICAL CABLE MANAGEMENT. TWO KITS FOR 26RU TE. ONE KIT FOR 12RU TE

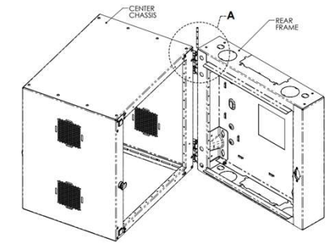

LOAD CAPACITY (per UL2416): 300 lb (163kg)

6 REAR HINGE AND PANEL

Ground Jumpers
- Provide common bonding from equipment rack or cabinet to halo conductor
- Available individually or in packages of 10
- Constructed of UL Listed components

Part Number	Description	Shipping Weight lb (kg)
40159-009	9' (2.7 m) Ground Jumper, 1 Each	2 (0.9)
40159-019	9' (2.7 m) Ground Jumper, 10 Each	20 (1.9)

1 REQUIRED GROUND JUMPERS

DEPARTMENT OF VETERANS AFFAIRS

OFFICE OF INFORMATION AND TECHNOLOGY

INFRASTRUCTURE OPERATIONS - APPLICATION HOSTING, CLOUD AND EDGE SOLUTIONS

ENTERPRISE DATA CENTER AND INFRASTRUCTURE ENGINEERING

EDICT
ENTERPRISE DATA CENTER INFRASTRUCTURE COLLABORATION TEAM

PROJECT:

CBOC INFORMATION TRANSPORT SYSTEMS SPECIFICATIONS

MARK	DATE	DESCRIPTION

ISSUE:

DRAWING No:	
FILE:	CBOC DESIGN TEMPLATE-v2.rvtd
DESIGNED BY:	KEVIN GRZELKA, CTDC
CHECKED BY:	MICHAEL JULIAN, RCDD KELLY BATES
DOC VERSION No:	2
PRINT DATE:	May 19, 2023
ISSUE DATE:	May 17, 2023

SHEET TITLE

TELECOMMUNICATIONS ENCLOSURE SPECIFICATIONS

SHEET: 19 OF 20