DESIGN EFSO REPAIRS AT VARIOUS FUELS FACILITIES - DESIGN EFSO REPAIRS TO HS-4 (Hydrant System #4)

Contract Number:
FA8903-18-D-0008

Task Order:
FA8903-23-F-0093

GENERAL NOTES:

1. BRAND NAMES: REFERENCE TO SPECIFIC BRAND NAMES OR COMPANIES IS FOR THE PURPOSE OF ESTABLISHING MINIMUM QUALITY STANDARDS, IDENTIFICATION AND GUIDANCE AND IS NOT INTENDED TO LIMIT SELECTION OF OTHER MANUFACTURERS THAT ARE EQUAL OR EXCEED THE SPECIFIED ITEMS IN TERMS OF PHYSICAL PROPERTIES, INCLUDING, COLOR RANGE, FINISH, DURABILITY, APPEARANCE, PERFORMANCE CHARACTERISTICS, AND OTHER FACTORS. OTHER PRODUCTS, MATERIALS, COLORS AND SYSTEMS, MAY BE SUBMITTED FOR EVALUATION AND APPROVAL/DISAPPROVAL BY THE CONTRACTING OFFICER.
2. THIS SET OF CONSTRUCTION DOCUMENTS SHALL BE CONSIDERED AS A WHOLE IN THAT THE GENERAL CONTRACTOR AND ALL THE SUB-CONTRACTORS ARE RESPONSIBLE FOR THE INFORMATION PRESENTED ON ALL SHEETS ON THE SET OF DRAWINGS AND ALL SECTIONS OF THE SPECIFICATIONS.
3. THE CONTRACTOR IS RESPONSIBLE FOR ERECTING ALL CONSTRUCTION FENCING AND BARRICADES AS REQUIRED TO PROTECT CONSTRUCTION MATERIAL AND TO PREVENT ANY UNAUTHORIZED PERSONNEL FROM ENTERING THE CONSTRUCTION SITE.
4. ANY DAMAGE TO THE EXISTING GROUNDS OR FACILITIES CAUSED BY CONSTRUCTION TRAFFIC OR ANY CONSTRUCTION OPERATION SHALL BE REPAIRED OR REPLACED BY THE CONTRACTOR TO MATCH OR EXCEED EXISTING CONDITIONS AT NO ADDITIONAL COST TO THE GOVERNMENT.
5. ALL WORK NOTED & LOCATED IN THESE DOCS SHALL BE UNDERSTOOD BY THE CONTRACTOR TO REQUIRE ALL NEW LABOR & MATERIALS UNLESS SPECIFICALLY NOTED TO BE "EXISTING" OR "BY OTHERS".

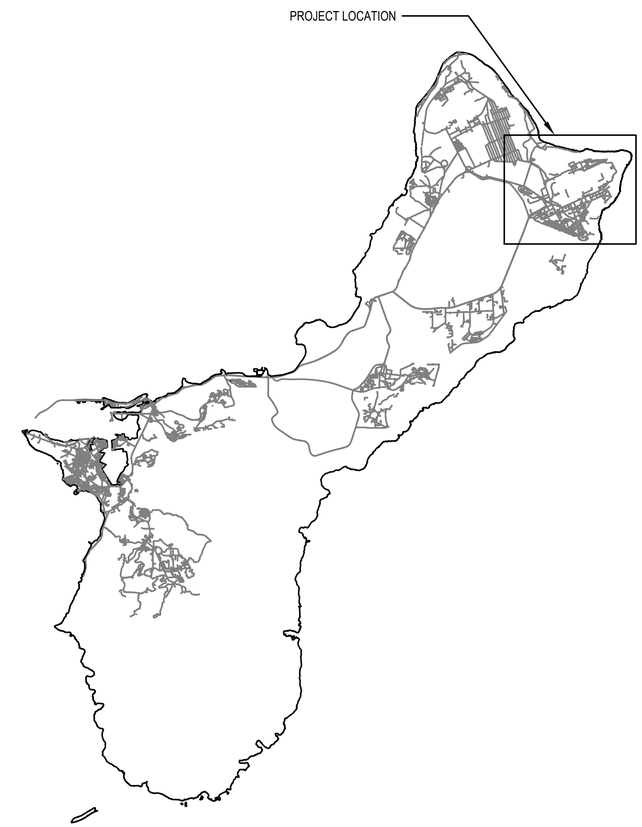

MISSING SHEET C-001

PROJECT DRAWING INDEX

SHT.	SHEET TITLE
GENERAL	
04G-001	GENERAL SHEET INDEX, SITE, AND LOCATION MAP
CIVIL	
04C-101	CIVIL SITE PLAN AND PROFILE SHEET 1
04C-102	CIVIL SITE PLAN AND PROFILE SHEET 2
04C-103	CIVIL SITE PLAN AND PROFILE SHEET 3
04C-104	CIVIL SITE PLAN AND PROFILE SHEET 4
04C-105	CIVIL SITE PLAN AND PROFILE SHEET 5
04C-106	CIVIL SITE PLAN AND PROFILE SHEET 6
04C-107	CIVIL SITE PLAN AND PROFILE SHEET 7
04C-108	CIVIL SITE PLAN AND PROFILE SHEET 8
04C-109	CIVIL SITE PLAN AND PROFILE SHEET 9
04C-110	CIVIL SITE PLAN AND PROFILE SHEET 10
04C-111	CIVIL SITE PLAN AND PROFILE SHEET 11
04C-112	CIVIL SITE PLAN AND PROFILE SHEET 12
04C-113	CIVIL SITE PLAN AND PROFILE SHEET 13
04C-114	CIVIL SITE PLAN AND PROFILE SHEET 14
04C-115	CIVIL SITE PLAN AND PROFILE SHEET 15
01C-041	12" TRENCHLESS CROSSING 4-1 PLAN AND PROFILE
01C-042	12" TRENCHLESS CROSSING 4-2 PLAN AND PROFILE
01C-043	12" TRENCHLESS CROSSING 4-3 PLAN AND PROFILE
01C-044	12" TRENCHLESS CROSSING 4-4 PLAN AND PROFILE
01C-045	12" TRENCHLESS CROSSING 4-5 PLAN AND PROFILE
01C-046	12" TRENCHLESS CROSSING 4-6 PLAN AND PROFILE
FIRE PROTECTION	
FA101	PUMPHOUSE 4 FIRE ALARM PLAN
INSTRUMENTATION & CONTROLS	
Y-101	EFSO CONTROL PANEL LAYOUT & BILL OF MATERIAL
Y-102	EFSO FIBER NETWORK OVERVIEW
Y-103	EFSO AND PUMP HOUSE WIRING LAYOUT
Y-104	PUMP HOUSE I&C PLAN AND DETAILS
ELECTRICAL	
E-001	LEGENDS SYMBOLS AND ABBREVIATIONS
E-101	OVERALL I&C AND ELECTRICAL SITE PLAN
E-201	I&C AND ELECTRICAL SITE PLAN AREA 4
E-501	LEGENDS SYMBOLS AND ABBREVIATIONS

35% DESIGN

NOT FOR CONSTRUCTION

PROJECT INFORMATION

DESIGN EFSO REPAIRS AT VARIOUS FUELS FACILITIES - DESIGN EFSO REPAIRS TO HS-4 (Hydrant System #4)

ANDERSEN AIR FORCE BASE, GUAM

REVISIONS

MARK	DATE	DESCRIPTION

MANAGEMENT INFORMATION

ISSUE DATE: 09/20/2023
DESIGN GROUP: HDR
DESIGNED BY: C. GOYETTE
DRAWN BY: J. WAGES
CHECKED BY: B. TAYLOR
DESIGN FILE LOCATION: 10374683

SHEET TITLE

GENERAL SHEET INDEX, SITE, AND LOCATION MAP

SHEET NUMBER

04G-001

SHEET ___ OF ___

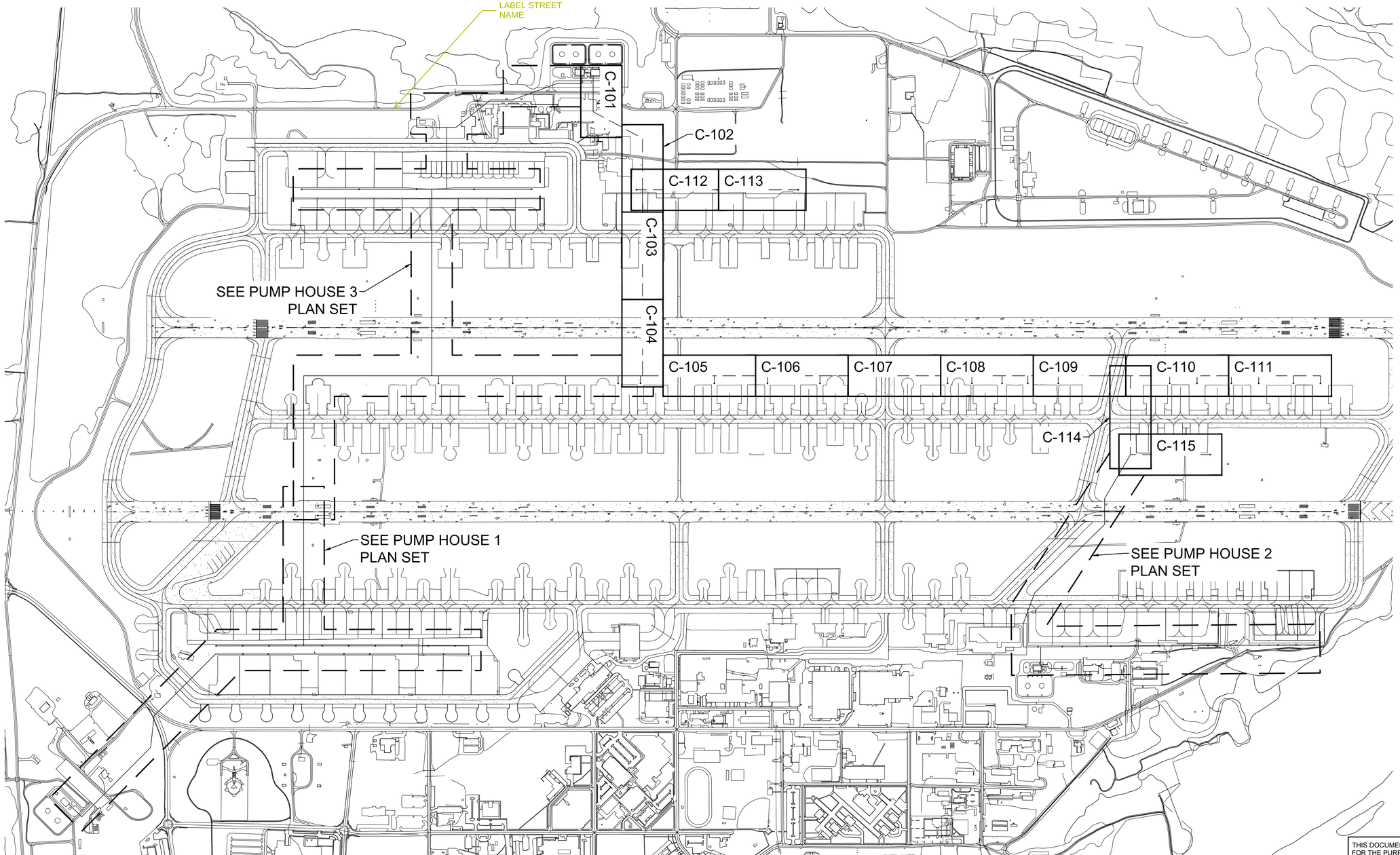

1 OVERALL SITE PLAN - PUMP HOUSE 4

SCALE: 1" = 500'

THIS DOCUMENT IS RELEASED FOR THE PURPOSE OF 35% DESIGN REVIEW UNDER THE AUTHORITY OF RICHARD A WHITE, TX LICENSE #86423 ON 09/20/23. IT IS NOT FOR CONSTRUCTION.

35% DESIGN

NOT FOR CONSTRUCTION

PROJECT INFORMATION

DESIGN EFSO REPAIRS AT VARIOUS FUELS FACILITIES - DESIGN EFSO REPAIRS TO HS-4 (Hydrant System #4)

ANDERSEN AIR FORCE BASE, GUAM

REVISIONS

MARK	DATE	DESCRIPTION

MANAGEMENT INFORMATION

ISSUE DATE: 09/20/2023
DESIGN GROUP: HDR
DESIGNED BY: R. WHITE
DRAWN BY: G. GUERRA
CHECKED BY:
DESIGN FILE LOCATION: 10374983

G. ROMERO

SHEET TITLE

CIVIL
OVERALL
SITE PLAN
PUMP HOUSE 4

SHEET NUMBER

04C-001

SHEET OF

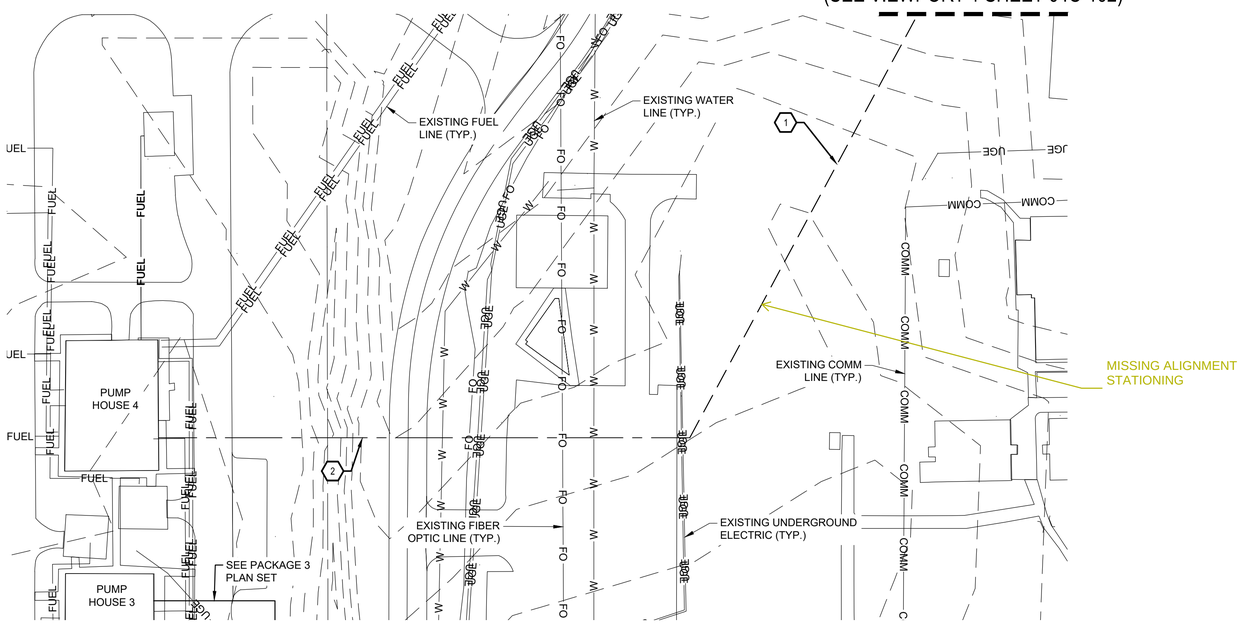

1 SITE PLAN - SHEET 1
SCALE: 1" = 50'

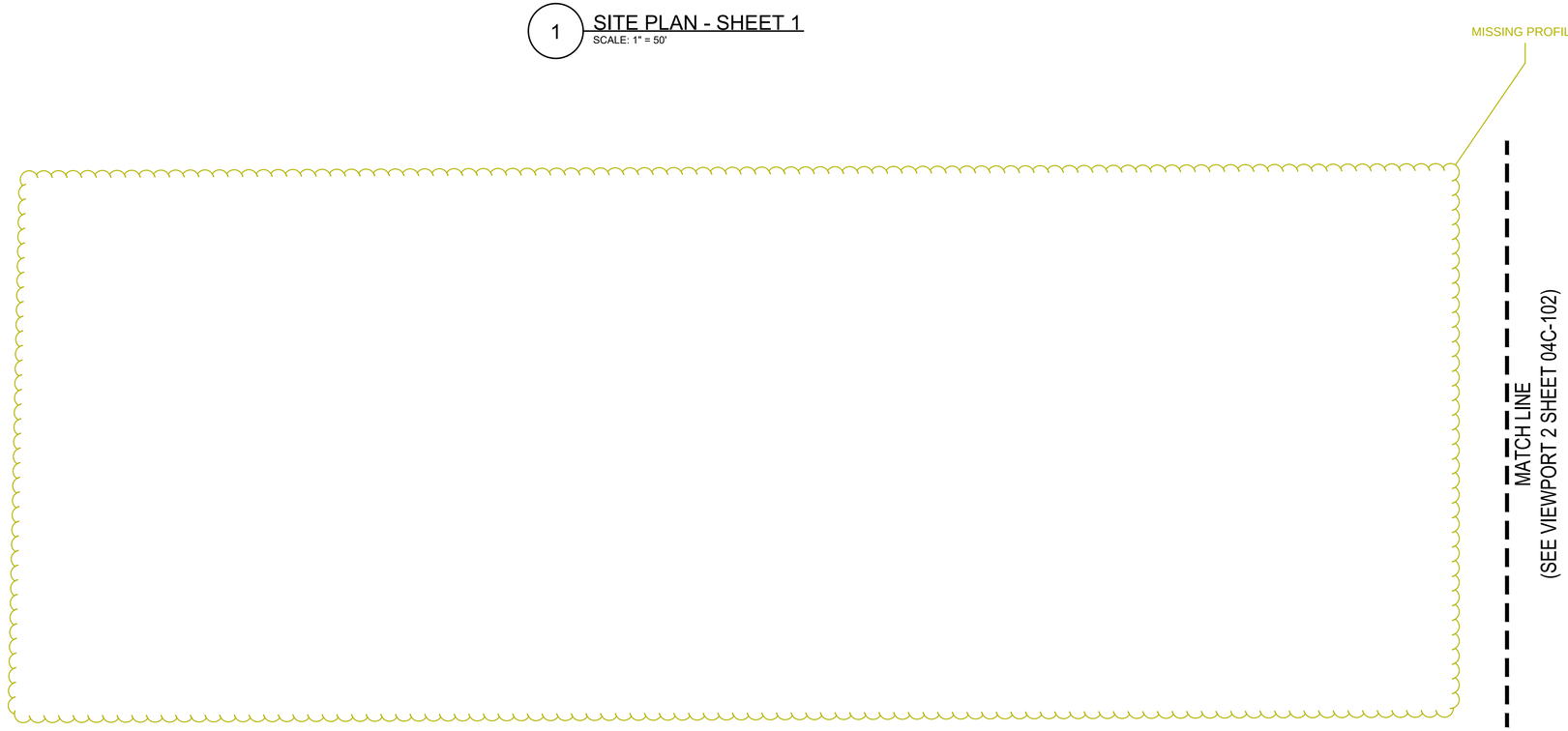

2 PROFILE - SHEET 1
SCALE: 1" = 50'

NORTH

0 50' 100' 200'
SCALE: 1" = 50'

LEGEND

W W	EXISTING WATER LINE
SS SS	EXISTING SANITARY SEWER LINE
G G	EXISTING GAS LINE
OHE	EXISTING OVERHEAD ELECTRIC
UGE	EXISTING UNDERGROUND ELECTRIC
X	EXISTING SECURITY FENCE
XXXX	EXISTING CONTOUR
	EXISTING ASPHALT PAVEMENT
	EXISTING CONCRETE PAVEMENT

KEYED NOTES

1. PROPOSED TRENCH ALIGNMENT.
2. PROPOSED TRENCHLESS ALIGNMENT.

GENERAL NOTES

1. CONTRACTOR TO VERIFY LOCATIONS OF EXISTING UTILITIES AND ALL SURVEY INFORMATION PRIOR TO CONSTRUCTION.
2. CONTRACTOR SHALL ADJUST MANHOLES AND VALVE BOXES WITHIN PROJECT LIMIT TO FINISH GRADE.

EXCAVATION NOTE

CONTRACTOR AND/OR CONTRACTOR'S INDEPENDENTLY RETAINED EMPLOYEE OR STRUCTURAL DESIGN/GEOTECHNICAL/SAFETY/EQUIPMENT CONSULTANT, IF ANY, SHALL REVIEW THESE PLANS AND AVAILABLE GEOTECHNICAL INFORMATION AND THE ANTICIPATED INSTALLATION SITE(S) WITHIN THE PROJECT WORK AREA IN ORDER TO IMPLEMENT CONTRACTORS TRENCH EXCAVATION SAFETY PROTECTION SYSTEMS, PROGRAMS AND/OR PROCEDURES. THE CONTRACTORS IMPLEMENTATION OF THE SYSTEMS, PROGRAMS AND/OR PROCEDURES SHALL PROVIDE FOR ADEQUATE TRENCH EXCAVATION SAFETY PROTECTION THAT COMPLIES WITH, AS A MINIMUM OSHA STANDARDS FOR TRENCH EXCAVATIONS. CONTRACTOR AND/OR CONTRACTORS INDEPENDENTLY RETAINED EMPLOYEE OR SAFETY CONSULTANT SHALL IMPLEMENT A TRENCH SAFETY PROGRAM IN ACCORDANCE WITHIN OSHA STANDARDS GOVERNING THE PRESENCE AND ACTIVITIES OF INDIVIDUALS WORKING IN AND AROUND TRENCH EXCAVATION.

G. ROMERO

THIS DOCUMENT IS RELEASED FOR THE PURPOSE OF 35% DESIGN REVIEW UNDER THE AUTHORITY OF RICHARD A WHITE, TX LICENSE #86423 ON 09/20/23. IT IS NOT FOR CONSTRUCTION.

35% DESIGN
NOT FOR CONSTRUCTION

PROJECT INFORMATION
DESIGN EFSO REPAIRS AT VARIOUS FUELS FACILITIES - DESIGN EFSO REPAIRS TO HS-4 (Hydrant System #4)
ANDERSEN AIR FORCE BASE, GUAM

REVISIONS

MARK	DATE	DESCRIPTION

MANAGEMENT INFORMATION
ISSUE DATE: 09/20/2023
DESIGN GROUP: HDR
DESIGNED BY: R. WHITE
DRAWN BY: G. GUERRA
CHECKED BY:
DESIGN FILE LOCATION: 10374683

SHEET TITLE
CIVIL
SITE PLAN
AND PROFILE
SHEET 1

SHEET NUMBER
04C-101

SHEET OF

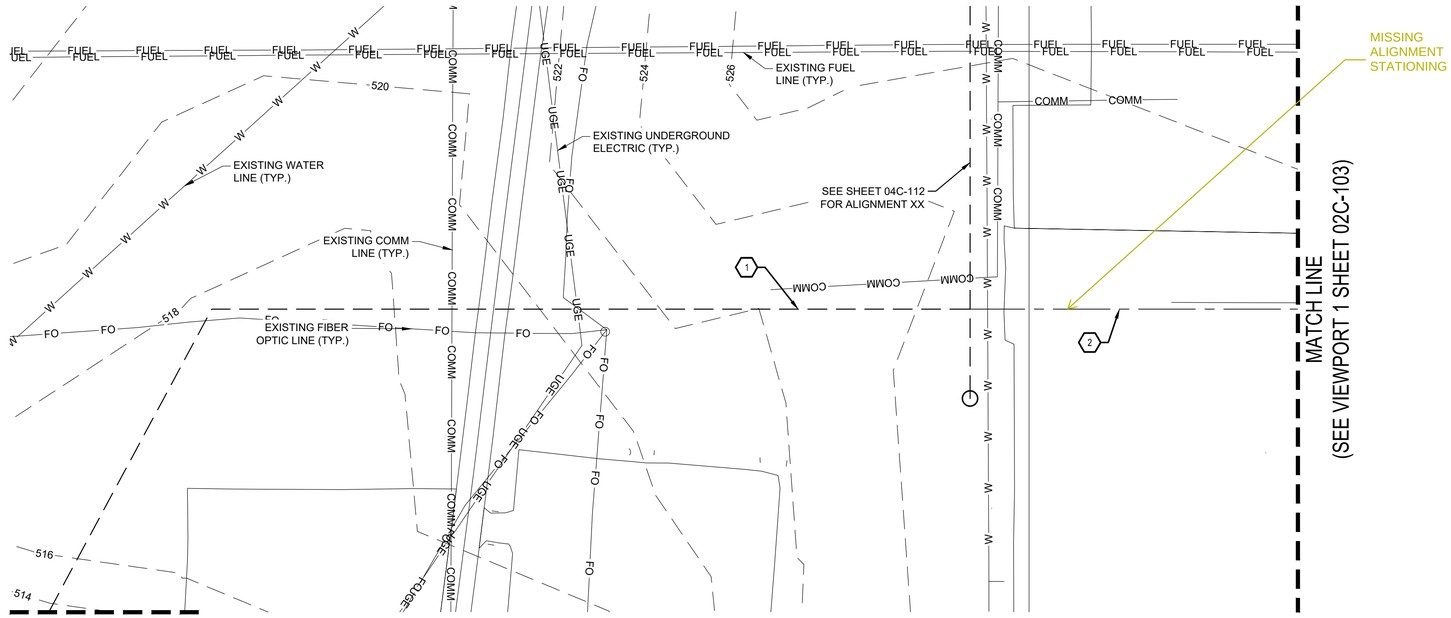

1 SITE PLAN - SHEET 2
SCALE: 1" = 50'

2 PROFILE - SHEET 2
SCALE: 1" = 50'

NORTH

0 50' 100' 200'
SCALE: 1" = 50'

LEGEND

W	EXISTING WATER LINE
SS	EXISTING SANITARY SEWER LINE
G	EXISTING GAS LINE
OHE	EXISTING OVERHEAD ELECTRIC
UGE	EXISTING UNDERGROUND ELECTRIC
X	EXISTING SECURITY FENCE
XXXX	EXISTING CONTOUR
	EXISTING ASPHALT PAVEMENT
	EXISTING CONCRETE PAVEMENT

KEYED NOTES

1. PROPOSED TRENCH ALIGNMENT.
2. PROPOSED TRENCHLESS ALIGNMENT.

GENERAL NOTES

1. CONTRACTOR TO VERIFY LOCATIONS OF EXISTING UTILITIES AND ALL SURVEY INFORMATION PRIOR TO CONSTRUCTION.
2. CONTRACTOR SHALL ADJUST MANHOLES AND VALVE BOXES WITHIN PROJECT LIMIT TO FINISH GRADE.

EXCAVATION NOTE

CONTRACTOR AND/OR CONTRACTOR'S INDEPENDENTLY RETAINED EMPLOYEE OR STRUCTURAL DESIGN/GEOTECHNICAL/SAFETY/EQUIPMENT CONSULTANT, IF ANY, SHALL REVIEW THESE PLANS AND AVAILABLE GEOTECHNICAL INFORMATION AND THE ANTICIPATED INSTALLATION SITE(S) WITHIN THE PROJECT WORK AREA IN ORDER TO IMPLEMENT CONTRACTORS TRENCH EXCAVATION SAFETY PROTECTION SYSTEMS, PROGRAMS AND/OR PROCEDURES. THE CONTRACTORS IMPLEMENTATION OF THE SYSTEMS, PROGRAMS AND/OR PROCEDURES SHALL PROVIDE FOR ADEQUATE TRENCH EXCAVATION SAFETY PROTECTION THAT COMPLIES WITH, AS A MINIMUM OSHA STANDARDS FOR TRENCH EXCAVATIONS. CONTRACTOR AND/OR CONTRACTORS INDEPENDENTLY RETAINED EMPLOYEE OR SAFETY CONSULTANT SHALL IMPLEMENT A TRENCH SAFETY PROGRAM IN ACCORDANCE WITHIN OSHA STANDARDS GOVERNING THE PRESENCE AND ACTIVITIES OF INDIVIDUALS WORKING IN AND AROUND TRENCH EXCAVATION.

G. ROMERO

THIS DOCUMENT IS RELEASED FOR THE PURPOSE OF 35% DESIGN REVIEW UNDER THE AUTHORITY OF RICHARD A WHITE, TX LICENSE #86423 ON 09/20/23. IT IS NOT FOR CONSTRUCTION.

35% DESIGN
NOT FOR CONSTRUCTION

PROJECT INFORMATION
DESIGN EFSO REPAIRS AT VARIOUS FUELS FACILITIES - DESIGN EFSO REPAIRS TO HS-4 (Hydrant System #4)
ANDERSEN AIR FORCE BASE, GUAM

REVISIONS

MARK	DATE	DESCRIPTION

MANAGEMENT INFORMATION
ISSUE DATE: 09/20/2023
DESIGN GROUP: HDR
DESIGNED BY: R. WHITE
DRAWN BY: G. GUERRA
CHECKED BY:
DESIGN FILE LOCATION: 10374683

SHEET TITLE
CIVIL SITE PLAN AND PROFILE SHEET 2

SHEET NUMBER
04C-102
SHEET OF

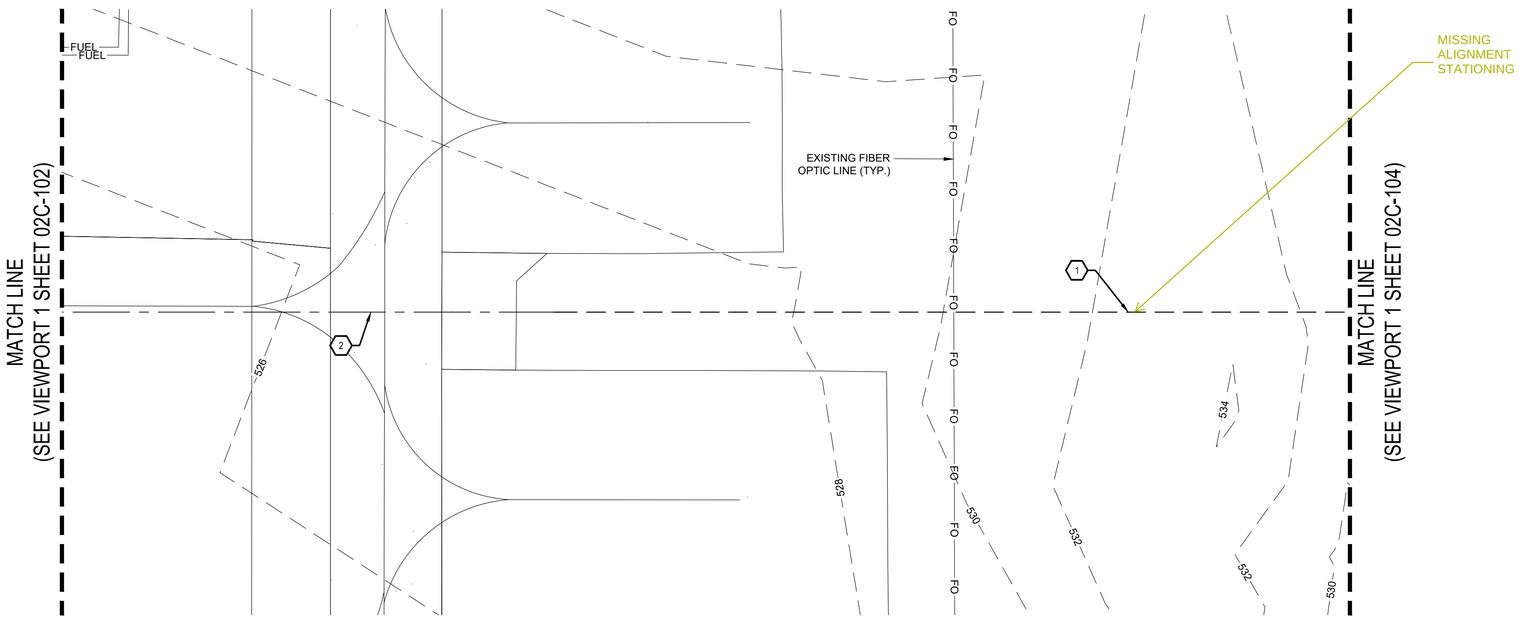

1 SITE PLAN - SHEET 3
SCALE: 1" = 50'

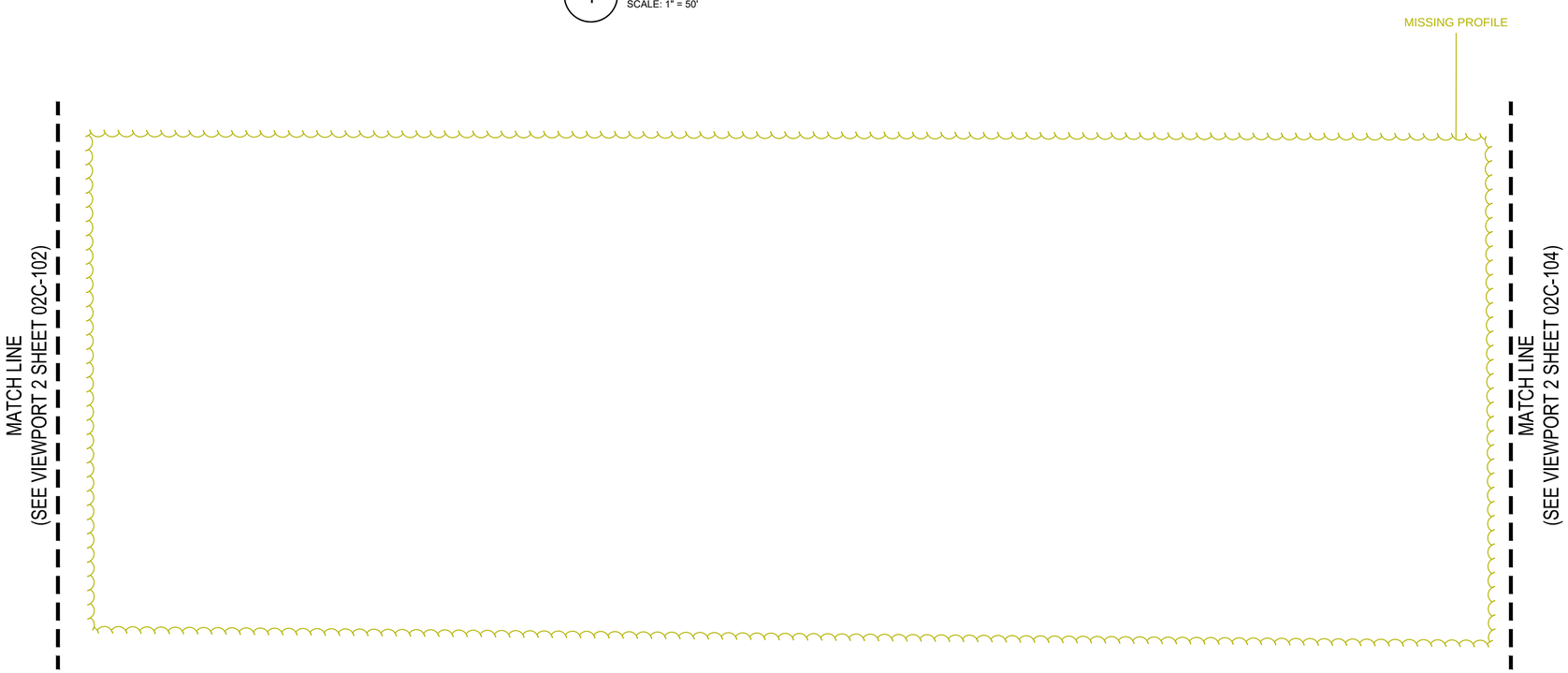

2 PROFILE - SHEET 3
SCALE: 1" = 50'

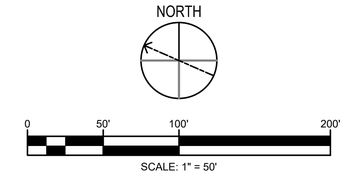

LEGEND

—W—W—	EXISTING WATER LINE
—SS—SS—	EXISTING SANITARY SEWER LINE
—G—G—	EXISTING GAS LINE
—OHE—	EXISTING OVERHEAD ELECTRIC
—UGE—	EXISTING UNDERGROUND ELECTRIC
—X—	EXISTING SECURITY FENCE
— — XXXX — —	EXISTING CONTOUR
	EXISTING ASPHALT PAVEMENT
	EXISTING CONCRETE PAVEMENT

KEYED NOTES

1. PROPOSED TRENCH ALIGNMENT.
2. PROPOSED TRENCHLESS ALIGNMENT.

GENERAL NOTES

1. CONTRACTOR TO VERIFY LOCATIONS OF EXISTING UTILITIES AND ALL SURVEY INFORMATION PRIOR TO CONSTRUCTION.
2. CONTRACTOR SHALL ADJUST MANHOLES AND VALVE BOXES WITHIN PROJECT LIMIT TO FINISH GRADE.

EXCAVATION NOTE

CONTRACTOR AND/OR CONTRACTOR'S INDEPENDENTLY RETAINED EMPLOYEE OR STRUCTURAL DESIGN/GEOTECHNICAL/SAFETY/EQUIPMENT CONSULTANT, IF ANY, SHALL REVIEW THESE PLANS AND AVAILABLE GEOTECHNICAL INFORMATION AND THE ANTICIPATED INSTALLATION SITE(S) WITHIN THE PROJECT WORK AREA IN ORDER TO IMPLEMENT CONTRACTORS TRENCH EXCAVATION SAFETY PROTECTION SYSTEMS, PROGRAMS AND/OR PROCEDURES. THE CONTRACTORS IMPLEMENTATION OF THE SYSTEMS, PROGRAMS AND/OR PROCEDURES SHALL PROVIDE FOR ADEQUATE TRENCH EXCAVATION SAFETY PROTECTION THAT COMPLIES WITH, AS A MINIMUM OSHA STANDARDS FOR TRENCH EXCAVATIONS. CONTRACTOR AND/OR CONTRACTORS INDEPENDENTLY RETAINED EMPLOYEE OR SAFETY CONSULTANT SHALL IMPLEMENT A TRENCH SAFETY PROGRAM IN ACCORDANCE WITHIN OSHA STANDARDS GOVERNING THE PRESENCE AND ACTIVITIES OF INDIVIDUALS WORKING IN AND AROUND TRENCH EXCAVATION.

G. ROMERO

THIS DOCUMENT IS RELEASED FOR THE PURPOSE OF 35% DESIGN REVIEW UNDER THE AUTHORITY OF RICHARD A WHITE, TX LICENSE #86423 ON 09/20/23. IT IS NOT FOR CONSTRUCTION.

35% DESIGN

NOT FOR CONSTRUCTION

PROJECT INFORMATION

DESIGN EFSO REPAIRS AT VARIOUS FUELS FACILITIES - DESIGN EFSO REPAIRS TO HS-4 (Hydrant System #4)

ANDERSEN AIR FORCE BASE, GUAM

REVISIONS

MARK	DATE	DESCRIPTION

MANAGEMENT INFORMATION

ISSUE DATE: 09/20/2023
DESIGN GROUP: HDR
DESIGNED BY: R. WHITE
DRAWN BY: G. GUERRA
CHECKED BY:
DESIGN FILE LOCATION: 10374683

SHEET TITLE

CIVIL
SITE PLAN
AND PROFILE
SHEET 3

SHEET NUMBER

04C-103

SHEET OF

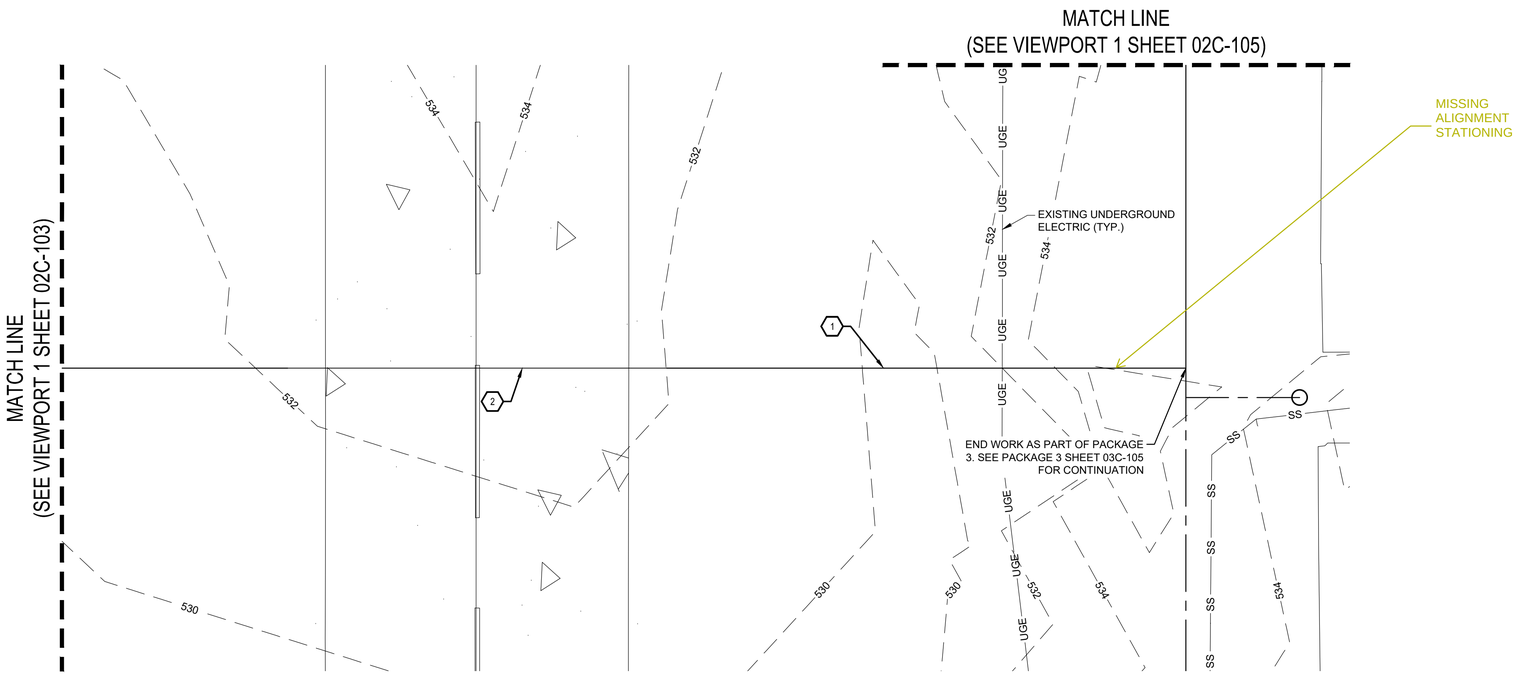

1 SITE PLAN - SHEET 4
SCALE: 1" = 50'

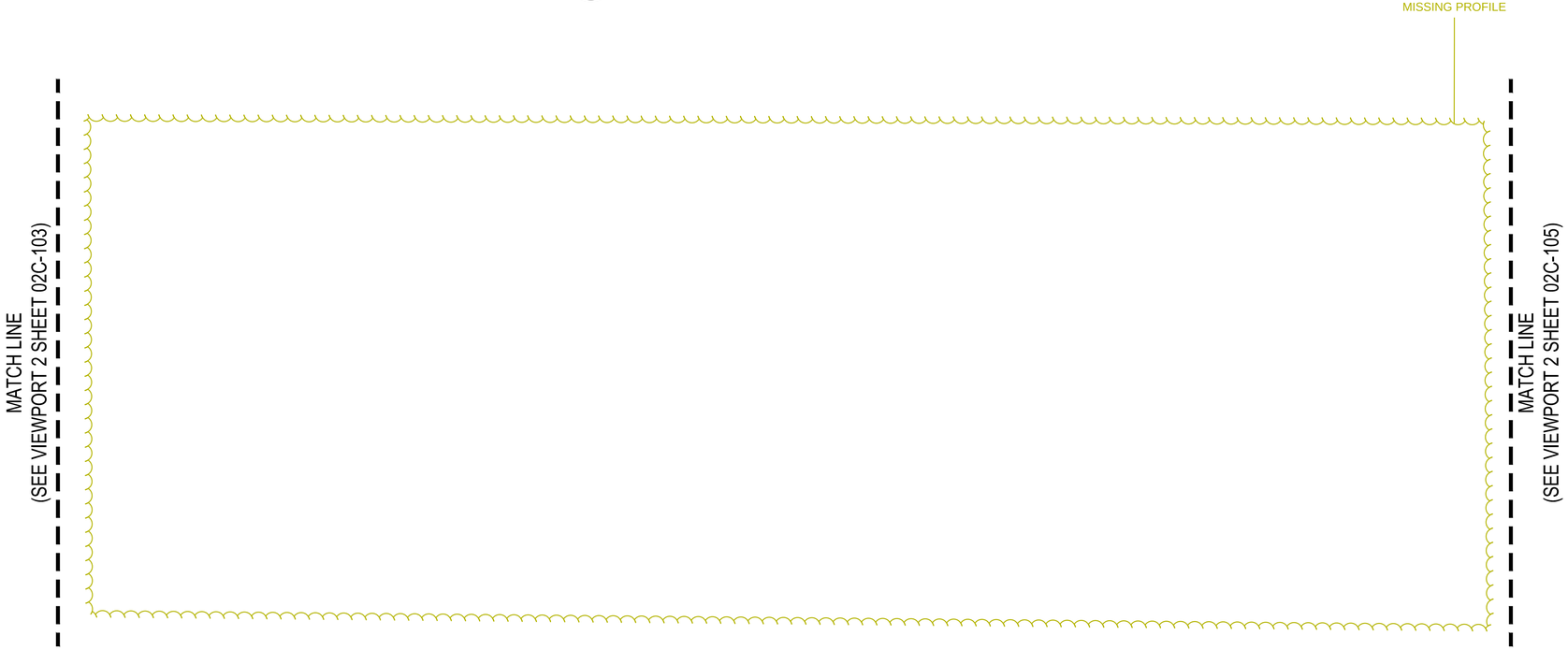

2 PROFILE - SHEET 4
SCALE: 1" = 50'

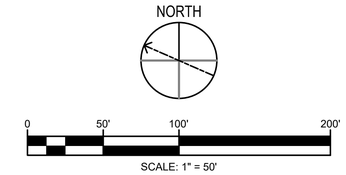

LEGEND

—W—W—	EXISTING WATER LINE
—SS—SS—	EXISTING SANITARY SEWER LINE
—G—G—	EXISTING GAS LINE
—OHE—	EXISTING OVERHEAD ELECTRIC
—UGE—	EXISTING UNDERGROUND ELECTRIC
—X—	EXISTING SECURITY FENCE
— —XXXX— —	EXISTING CONTOUR
	EXISTING ASPHALT PAVEMENT
	EXISTING CONCRETE PAVEMENT

KEYED NOTES (#)

1. PROPOSED TRENCH ALIGNMENT.
2. PROPOSED TRENCHLESS ALIGNMENT.

GENERAL NOTES

1. CONTRACTOR TO VERIFY LOCATIONS OF EXISTING UTILITIES AND ALL SURVEY INFORMATION PRIOR TO CONSTRUCTION.
2. CONTRACTOR SHALL ADJUST MANHOLES AND VALVE BOXES WITHIN PROJECT LIMIT TO FINISH GRADE.

EXCAVATION NOTE

CONTRACTOR AND/OR CONTRACTOR'S INDEPENDENTLY RETAINED EMPLOYEE OR STRUCTURAL DESIGN/GEOTECHNICAL/SAFETY/EQUIPMENT CONSULTANT, IF ANY, SHALL REVIEW THESE PLANS AND AVAILABLE GEOTECHNICAL INFORMATION AND THE ANTICIPATED INSTALLATION SITE(S) WITHIN THE PROJECT WORK AREA IN ORDER TO IMPLEMENT CONTRACTORS TRENCH EXCAVATION SAFETY PROTECTION SYSTEMS, PROGRAMS AND/OR PROCEDURES. THE CONTRACTORS IMPLEMENTATION OF THE SYSTEMS, PROGRAMS AND/OR PROCEDURES SHALL PROVIDE FOR ADEQUATE TRENCH EXCAVATION SAFETY PROTECTION THAT COMPLIES WITH, AS A MINIMUM OSHA STANDARDS FOR TRENCH EXCAVATIONS. CONTRACTOR AND/OR CONTRACTORS INDEPENDENTLY RETAINED EMPLOYEE OR SAFETY CONSULTANT SHALL IMPLEMENT A TRENCH SAFETY PROGRAM IN ACCORDANCE WITHIN OSHA STANDARDS GOVERNING THE PRESENCE AND ACTIVITIES OF INDIVIDUALS WORKING IN AND AROUND TRENCH EXCAVATION.

THIS DOCUMENT IS RELEASED FOR THE PURPOSE OF 35% DESIGN REVIEW UNDER THE AUTHORITY OF RICHARD A WHITE, TX LICENSE #86423 ON 09/20/23. IT IS NOT FOR CONSTRUCTION.

35% DESIGN

NOT FOR CONSTRUCTION

PROJECT INFORMATION

DESIGN EFSO REPAIRS AT VARIOUS FUELS FACILITIES - DESIGN EFSO REPAIRS TO HS-4 (Hydrant System #4)

ANDERSEN AIR FORCE BASE, GUAM

REVISIONS

MARK	DATE	DESCRIPTION

MANAGEMENT INFORMATION

ISSUE DATE: 09/20/2023
DESIGN GROUP: HDR
DESIGNED BY: R. WHITE
DRAWN BY: G. GUERRA
CHECKED BY:
DESIGN FILE LOCATION: 10374683

SHEET TITLE

CIVIL SITE PLAN AND PROFILE SHEET 4

SHEET NUMBER

04C-104

SHEET OF

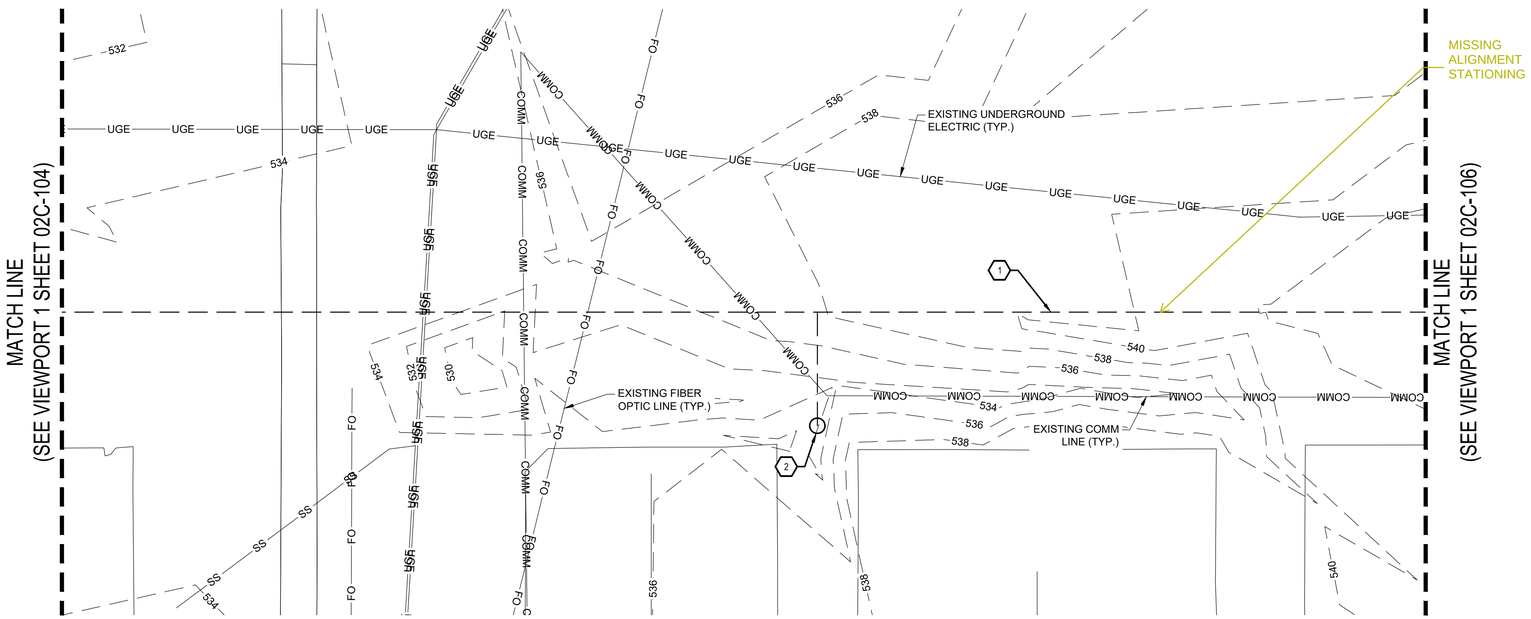

1 SITE PLAN - SHEET 5
SCALE: 1" = 50'

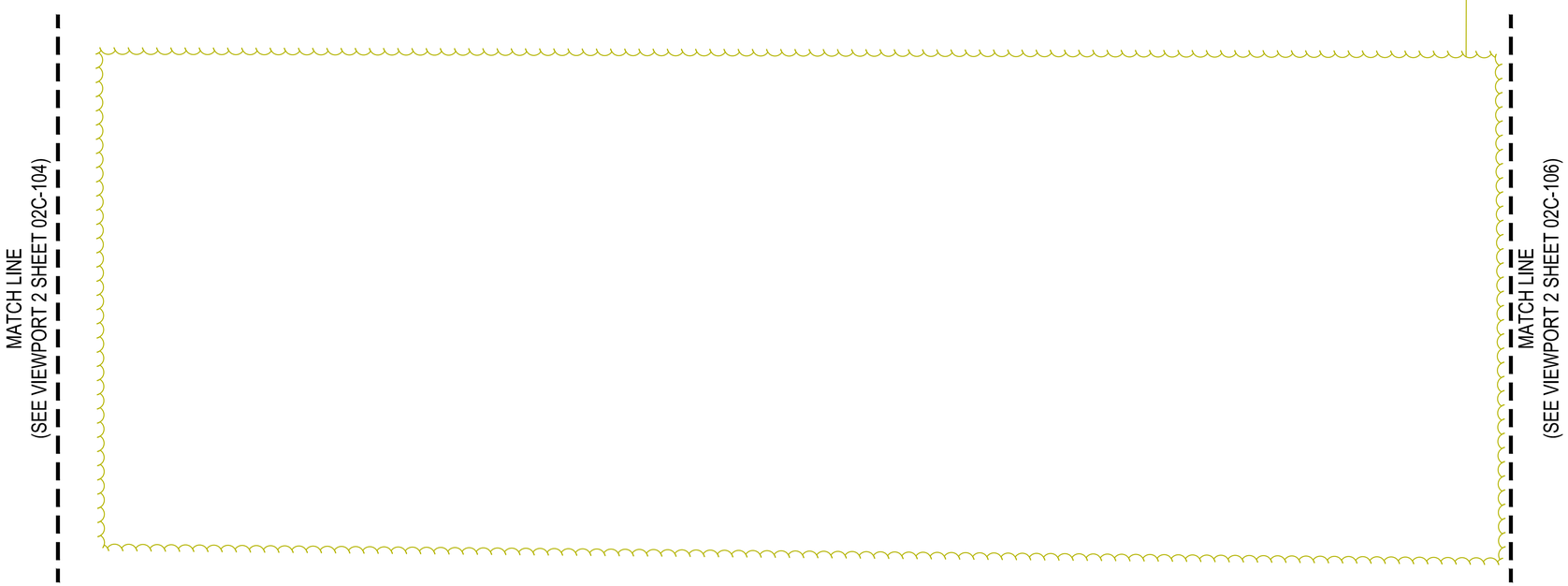

2 PROFILE - SHEET 5
SCALE: 1" = 50'

NORTH

0 50' 100' 200'
SCALE: 1" = 50'

LEGEND

—W—W—	EXISTING WATER LINE
—SS—SS—	EXISTING SANITARY SEWER LINE
—G—G—	EXISTING GAS LINE
—OHE—	EXISTING OVERHEAD ELECTRIC
—UGE—	EXISTING UNDERGROUND ELECTRIC
—X—	EXISTING SECURITY FENCE
— —XXXX— —	EXISTING CONTOUR
	EXISTING ASPHALT PAVEMENT
	EXISTING CONCRETE PAVEMENT

KEYED NOTES

1. PROPOSED TRENCH ALIGNMENT.
2. PROPOSED EMERGENCY FUEL SHUT OFF.

GENERAL NOTES

1. CONTRACTOR TO VERIFY LOCATIONS OF EXISTING UTILITIES AND ALL SURVEY INFORMATION PRIOR TO CONSTRUCTION.
2. CONTRACTOR SHALL ADJUST MANHOLES AND VALVE BOXES WITHIN PROJECT LIMIT TO FINISH GRADE.

EXCAVATION NOTE

CONTRACTOR AND/OR CONTRACTOR'S INDEPENDENTLY RETAINED EMPLOYEE OR STRUCTURAL DESIGN/GEOTECHNICAL/SAFETY/EQUIPMENT CONSULTANT, IF ANY, SHALL REVIEW THESE PLANS AND AVAILABLE GEOTECHNICAL INFORMATION AND THE ANTICIPATED INSTALLATION SITE(S) WITHIN THE PROJECT WORK AREA IN ORDER TO IMPLEMENT CONTRACTORS TRENCH EXCAVATION SAFETY PROTECTION SYSTEMS, PROGRAMS AND/OR PROCEDURES. THE CONTRACTORS IMPLEMENTATION OF THE SYSTEMS, PROGRAMS AND/OR PROCEDURES SHALL PROVIDE FOR ADEQUATE TRENCH EXCAVATION SAFETY PROTECTION THAT COMPLIES WITH, AS A MINIMUM OSHA STANDARDS FOR TRENCH EXCAVATIONS. CONTRACTOR AND/OR CONTRACTORS INDEPENDENTLY RETAINED EMPLOYEE OR SAFETY CONSULTANT SHALL IMPLEMENT A TRENCH SAFETY PROGRAM IN ACCORDANCE WITHIN OSHA STANDARDS GOVERNING THE PRESENCE AND ACTIVITIES OF INDIVIDUALS WORKING IN AND AROUND TRENCH EXCAVATION.

THIS DOCUMENT IS RELEASED FOR THE PURPOSE OF 35% DESIGN REVIEW UNDER THE AUTHORITY OF RICHARD A WHITE, TX LICENSE #86423 ON 09/20/23. IT IS NOT FOR CONSTRUCTION.

35% DESIGN
NOT FOR CONSTRUCTION

PROJECT INFORMATION
DESIGN EFSO REPAIRS AT VARIOUS FUELS FACILITIES - DESIGN EFSO REPAIRS TO HS-4 (Hydrant System #4)
ANDERSEN AIR FORCE BASE, GUAM

REVISIONS

MARK	DATE	DESCRIPTION

MANAGEMENT INFORMATION
ISSUE DATE: 09/20/2023
DESIGN GROUP: HDR
DESIGNED BY: R. WHITE
DRAWN BY: G. GUERRA
CHECKED BY: G. ROMERO
DESIGN FILE LOCATION: 10374683

SHEET TITLE
CIVIL
SITE PLAN
AND PROFILE
SHEET 5

SHEET NUMBER
04C-105
SHEET OF

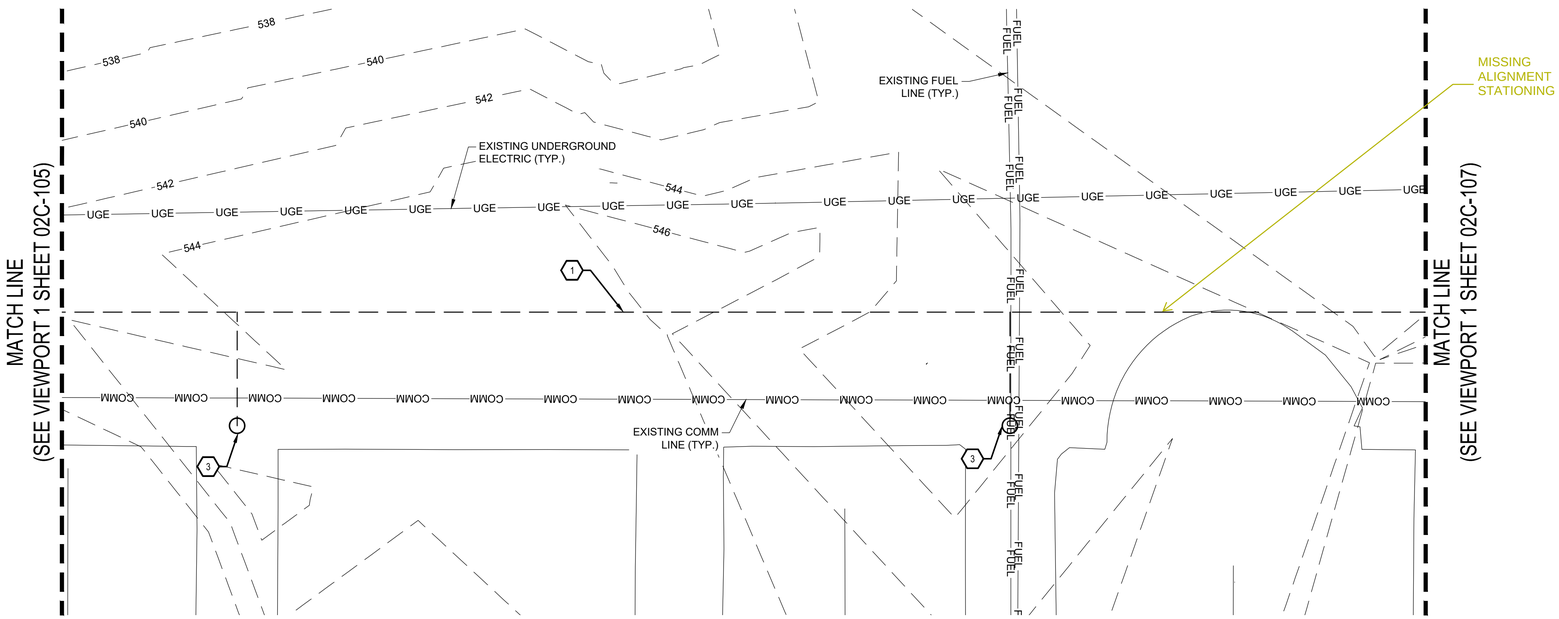

1 SITE PLAN - SHEET 6
SCALE: 1" = 50'

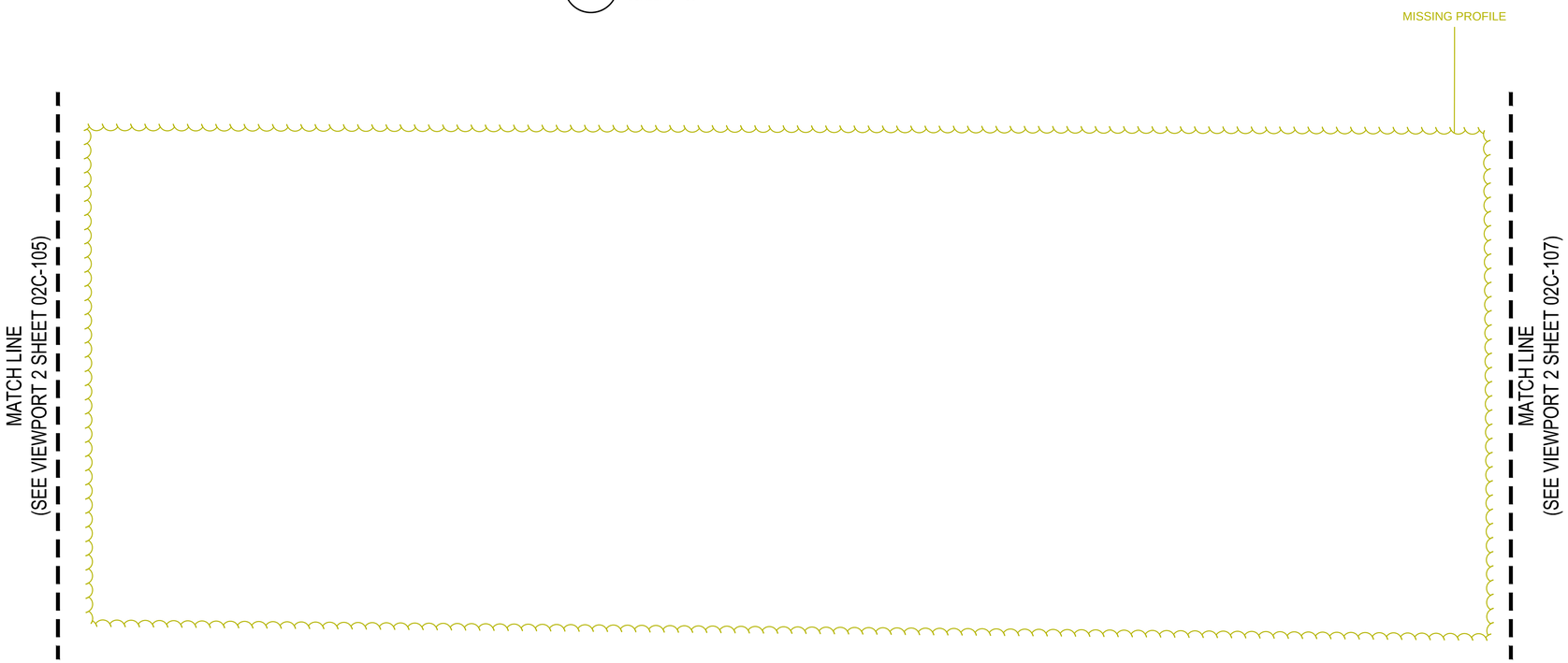

2 PROFILE - SHEET 6
SCALE: 1" = 50'

NORTH

0 50' 100' 200'
SCALE: 1" = 50'

LEGEND

—W—W—	EXISTING WATER LINE
—SS—SS—	EXISTING SANITARY SEWER LINE
—G—G—	EXISTING GAS LINE
—OHE—	EXISTING OVERHEAD ELECTRIC
—UGE—	EXISTING UNDERGROUND ELECTRIC
—X—	EXISTING SECURITY FENCE
— — XXXX — —	EXISTING CONTOUR
	EXISTING ASPHALT PAVEMENT
	EXISTING CONCRETE PAVEMENT

KEYED NOTES

1. PROPOSED TRENCH ALIGNMENT.
2. PROPOSED EMERGENCY FUEL SHUT OFF.

GENERAL NOTES

1. CONTRACTOR TO VERIFY LOCATIONS OF EXISTING UTILITIES AND ALL SURVEY INFORMATION PRIOR TO CONSTRUCTION.
2. CONTRACTOR SHALL ADJUST MANHOLES AND VALVE BOXES WITHIN PROJECT LIMIT TO FINISH GRADE.

EXCAVATION NOTE

CONTRACTOR AND/OR CONTRACTOR'S INDEPENDENTLY RETAINED EMPLOYEE OR STRUCTURAL DESIGN/GEOTECHNICAL/SAFETY/EQUIPMENT CONSULTANT, IF ANY, SHALL REVIEW THESE PLANS AND AVAILABLE GEOTECHNICAL INFORMATION AND THE ANTICIPATED INSTALLATION SITE(S) WITHIN THE PROJECT WORK AREA IN ORDER TO IMPLEMENT CONTRACTORS TRENCH EXCAVATION SAFETY PROTECTION SYSTEMS, PROGRAMS AND/OR PROCEDURES. THE CONTRACTORS IMPLEMENTATION OF THE SYSTEMS, PROGRAMS AND/OR PROCEDURES SHALL PROVIDE FOR ADEQUATE TRENCH EXCAVATION SAFETY PROTECTION THAT COMPLIES WITH, AS A MINIMUM OSHA STANDARDS FOR TRENCH EXCAVATIONS. CONTRACTOR AND/OR CONTRACTORS INDEPENDENTLY RETAINED EMPLOYEE OR SAFETY CONSULTANT SHALL IMPLEMENT A TRENCH SAFETY PROGRAM IN ACCORDANCE WITHIN OSHA STANDARDS GOVERNING THE PRESENCE AND ACTIVITIES OF INDIVIDUALS WORKING IN AND AROUND TRENCH EXCAVATION.

THIS DOCUMENT IS RELEASED FOR THE PURPOSE OF 35% DESIGN REVIEW UNDER THE AUTHORITY OF RICHARD A WHITE, TX LICENSE #86423 ON 09/20/23. IT IS NOT FOR CONSTRUCTION.

35% DESIGN
NOT FOR CONSTRUCTION

PROJECT INFORMATION
DESIGN EFSO REPAIRS AT VARIOUS FUELS FACILITIES - DESIGN EFSO REPAIRS TO HS-4 (Hydrant System #4)
ANDERSEN AIR FORCE BASE, GUAM

REVISIONS

MARK	DATE	DESCRIPTION

MANAGEMENT INFORMATION
ISSUE DATE: 09/20/2023
DESIGN GROUP: HDR
DESIGNED BY: R. WHITE
DRAWN BY: G. ROMERO
CHECKED BY:
DESIGN FILE LOCATION: 10374683

G. ROMERO

SHEET TITLE
CIVIL SITE PLAN AND PROFILE SHEET 6

SHEET NUMBER
04C-106

SHEET OF

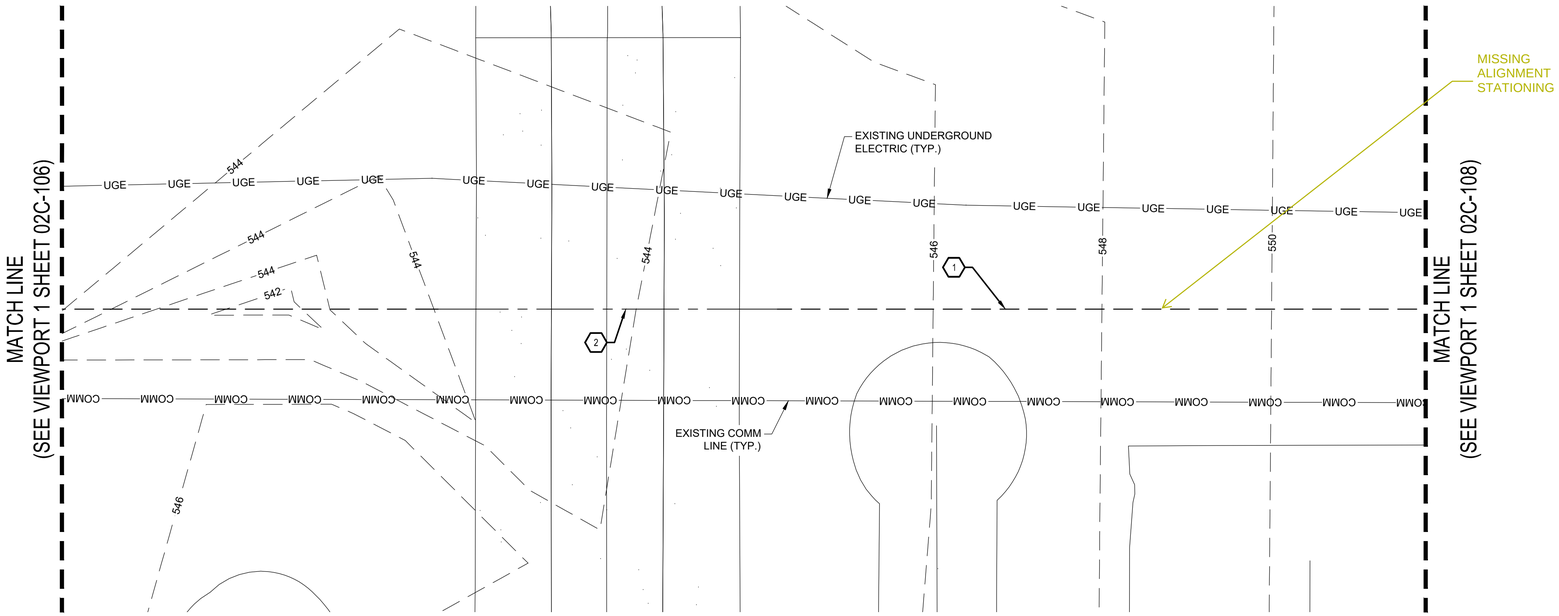

1 SITE PLAN - SHEET 7
SCALE: 1" = 50'

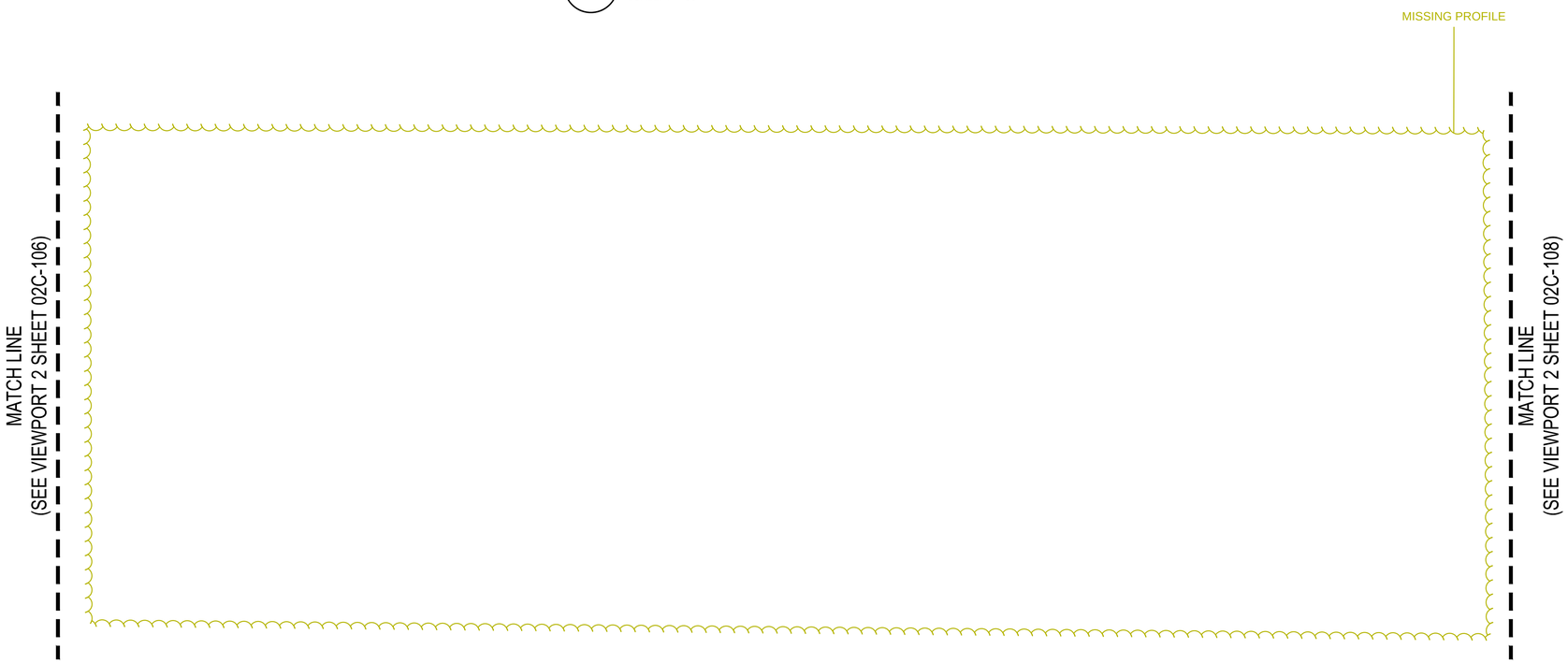

2 PROFILE - SHEET 7
SCALE: 1" = 50'

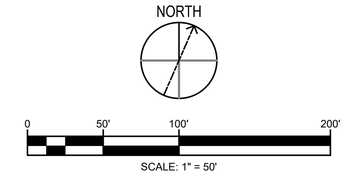

LEGEND

W W	EXISTING WATER LINE
SS SS	EXISTING SANITARY SEWER LINE
G G	EXISTING GAS LINE
OHE	EXISTING OVERHEAD ELECTRIC
UGE	EXISTING UNDERGROUND ELECTRIC
X	EXISTING SECURITY FENCE
XXXX	EXISTING CONTOUR
	EXISTING ASPHALT PAVEMENT
	EXISTING CONCRETE PAVEMENT

KEYED NOTES

1. PROPOSED TRENCH ALIGNMENT.
2. PROPOSED TRENCHLESS ALIGNMENT.

GENERAL NOTES

1. CONTRACTOR TO VERIFY LOCATIONS OF EXISTING UTILITIES AND ALL SURVEY INFORMATION PRIOR TO CONSTRUCTION.
2. CONTRACTOR SHALL ADJUST MANHOLES AND VALVE BOXES WITHIN PROJECT LIMIT TO FINISH GRADE.

EXCAVATION NOTE

CONTRACTOR AND/OR CONTRACTOR'S INDEPENDENTLY RETAINED EMPLOYEE OR STRUCTURAL DESIGN/GEOTECHNICAL/SAFETY/EQUIPMENT CONSULTANT, IF ANY, SHALL REVIEW THESE PLANS AND AVAILABLE GEOTECHNICAL INFORMATION AND THE ANTICIPATED INSTALLATION SITE(S) WITHIN THE PROJECT WORK AREA IN ORDER TO IMPLEMENT CONTRACTORS TRENCH EXCAVATION SAFETY PROTECTION SYSTEMS, PROGRAMS AND/OR PROCEDURES. THE CONTRACTORS IMPLEMENTATION OF THE SYSTEMS, PROGRAMS AND/OR PROCEDURES SHALL PROVIDE FOR ADEQUATE TRENCH EXCAVATION SAFETY PROTECTION THAT COMPLIES WITH, AS A MINIMUM OSHA STANDARDS FOR TRENCH EXCAVATIONS. CONTRACTOR AND/OR CONTRACTORS INDEPENDENTLY RETAINED EMPLOYEE OR SAFETY CONSULTANT SHALL IMPLEMENT A TRENCH SAFETY PROGRAM IN ACCORDANCE WITHIN OSHA STANDARDS GOVERNING THE PRESENCE AND ACTIVITIES OF INDIVIDUALS WORKING IN AND AROUND TRENCH EXCAVATION.

THIS DOCUMENT IS RELEASED FOR THE PURPOSE OF 35% DESIGN REVIEW UNDER THE AUTHORITY OF RICHARD A WHITE, TX LICENSE #86423 ON 09/20/23. IT IS NOT FOR CONSTRUCTION.

35% DESIGN

NOT FOR CONSTRUCTION

PROJECT INFORMATION

DESIGN EFSO REPAIRS AT VARIOUS FUELS FACILITIES - DESIGN EFSO REPAIRS TO HS-4 (Hydrant System #4)

ANDERSEN AIR FORCE BASE, GUAM

REVISIONS

MARK	DATE	DESCRIPTION

MANAGEMENT INFORMATION

ISSUE DATE: 09/20/2023
DESIGN GROUP: HDR
DESIGNED BY: R. WHITE
DRAWN BY: G. GUERRA
CHECKED BY: G. ROMERO
DESIGN FILE LOCATION: 10374683

SHEET TITLE

CIVIL
SITE PLAN
AND PROFILE
SHEET 7

SHEET NUMBER

04C-107

SHEET OF

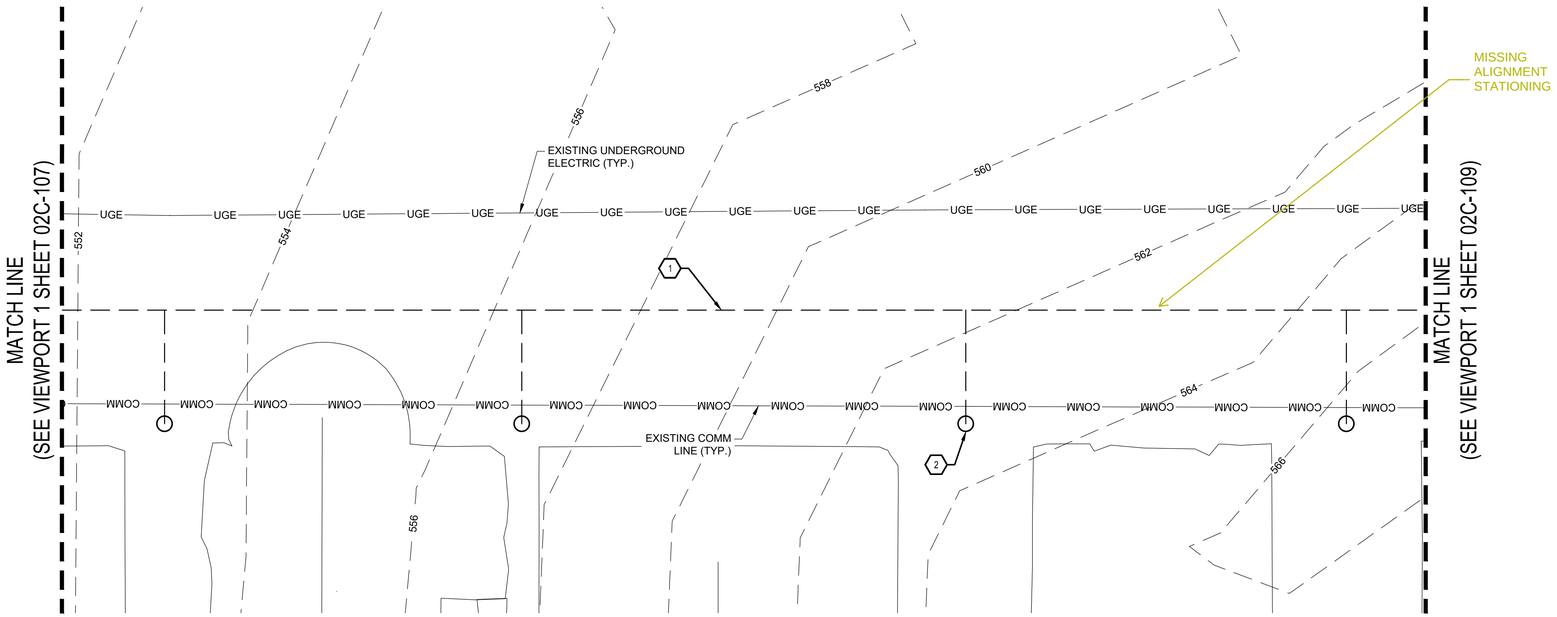

1 SITE PLAN - SHEET 8
SCALE: 1" = 50'

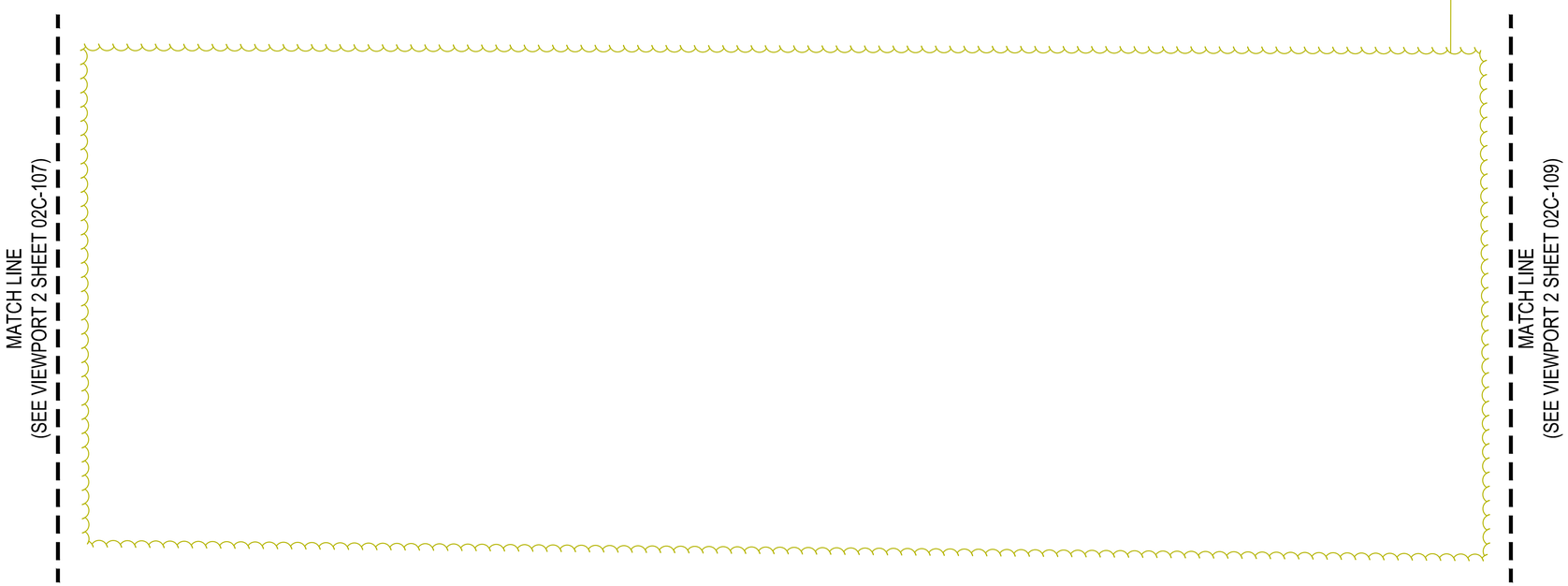

2 PROFILE - SHEET 8
SCALE: 1" = 50'

NORTH

0 50' 100' 200'
SCALE: 1" = 50'

LEGEND

—W—W—	EXISTING WATER LINE
—SS—SS—	EXISTING SANITARY SEWER LINE
—G—G—	EXISTING GAS LINE
—OHE—	EXISTING OVERHEAD ELECTRIC
—UGE—	EXISTING UNDERGROUND ELECTRIC
—X—	EXISTING SECURITY FENCE
— — XXXX — —	EXISTING CONTOUR
	EXISTING ASPHALT PAVEMENT
	EXISTING CONCRETE PAVEMENT

KEYED NOTES

1. PROPOSED TRENCH ALIGNMENT.
2. PROPOSED EMERGENCY FUEL SHUT OFF.

GENERAL NOTES

1. CONTRACTOR TO VERIFY LOCATIONS OF EXISTING UTILITIES AND ALL SURVEY INFORMATION PRIOR TO CONSTRUCTION.
2. CONTRACTOR SHALL ADJUST MANHOLES AND VALVE BOXES WITHIN PROJECT LIMIT TO FINISH GRADE.

EXCAVATION NOTE

CONTRACTOR AND/OR CONTRACTOR'S INDEPENDENTLY RETAINED EMPLOYEE OR STRUCTURAL DESIGN/GEOTECHNICAL/SAFETY/EQUIPMENT CONSULTANT, IF ANY, SHALL REVIEW THESE PLANS AND AVAILABLE GEOTECHNICAL INFORMATION AND THE ANTICIPATED INSTALLATION SITE(S) WITHIN THE PROJECT WORK AREA IN ORDER TO IMPLEMENT CONTRACTORS TRENCH EXCAVATION SAFETY PROTECTION SYSTEMS, PROGRAMS AND/OR PROCEDURES. THE CONTRACTORS IMPLEMENTATION OF THE SYSTEMS, PROGRAMS AND/OR PROCEDURES SHALL PROVIDE FOR ADEQUATE TRENCH EXCAVATION SAFETY PROTECTION THAT COMPLIES WITH, AS A MINIMUM OSHA STANDARDS FOR TRENCH EXCAVATIONS. CONTRACTOR AND/OR CONTRACTORS INDEPENDENTLY RETAINED EMPLOYEE OR SAFETY CONSULTANT SHALL IMPLEMENT A TRENCH SAFETY PROGRAM IN ACCORDANCE WITHIN OSHA STANDARDS GOVERNING THE PRESENCE AND ACTIVITIES OF INDIVIDUALS WORKING IN AND AROUND TRENCH EXCAVATION.

G. ROMERO

THIS DOCUMENT IS RELEASED FOR THE PURPOSE OF 35% DESIGN REVIEW UNDER THE AUTHORITY OF RICHARD A WHITE, TX LICENSE #86423 ON 09/20/23. IT IS NOT FOR CONSTRUCTION.

35% DESIGN
NOT FOR CONSTRUCTION

PROJECT INFORMATION
DESIGN EFSO REPAIRS AT VARIOUS FUELS FACILITIES - DESIGN EFSO REPAIRS TO HS-4 (Hydrant System #4)
ANDERSEN AIR FORCE BASE, GUAM

REVISIONS

MARK	DATE	DESCRIPTION

MANAGEMENT INFORMATION
ISSUE DATE: 09/20/2023
DESIGN GROUP: HDR
DESIGNED BY: R. WHITE
DRAWN BY: G. GUERRA
CHECKED BY:
DESIGN FILE LOCATION: 10374683

SHEET TITLE
CIVIL
SITE PLAN
AND PROFILE
SHEET 8

SHEET NUMBER
04C-108
SHEET OF

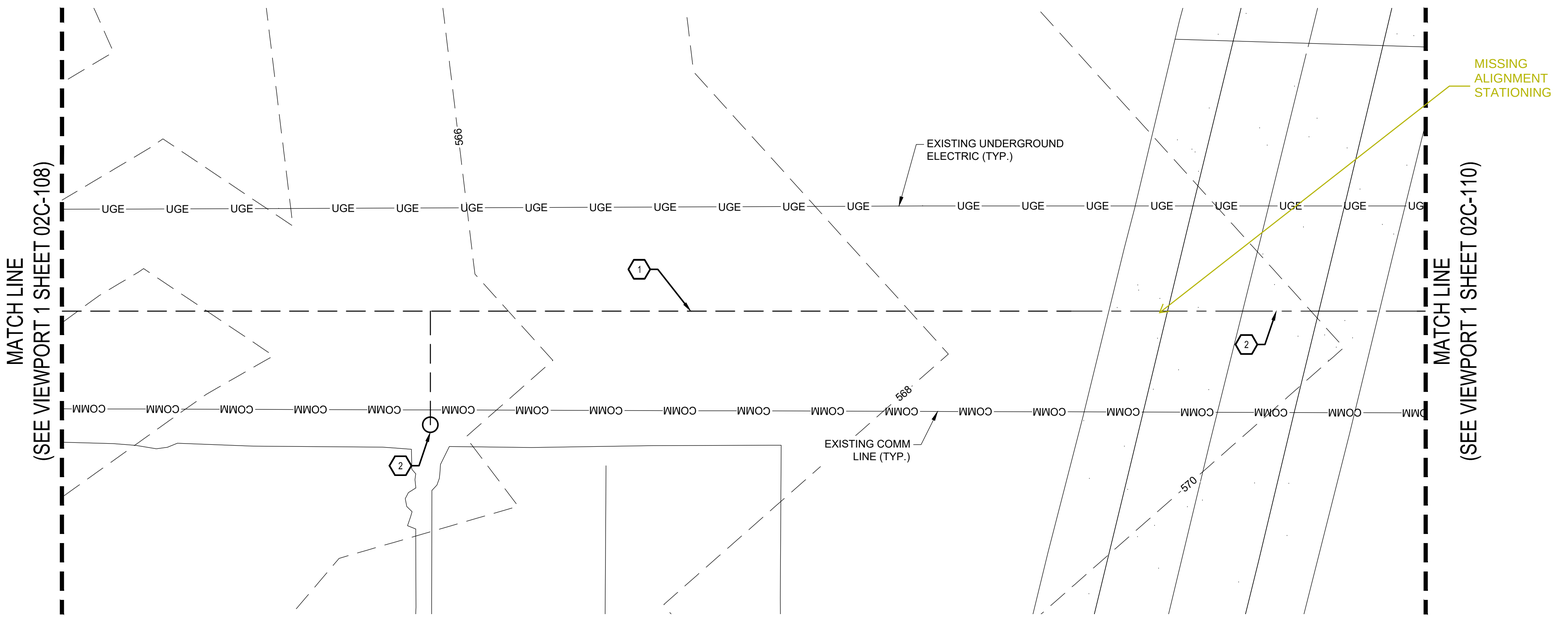

1 SITE PLAN - SHEET 9
SCALE: 1" = 50'

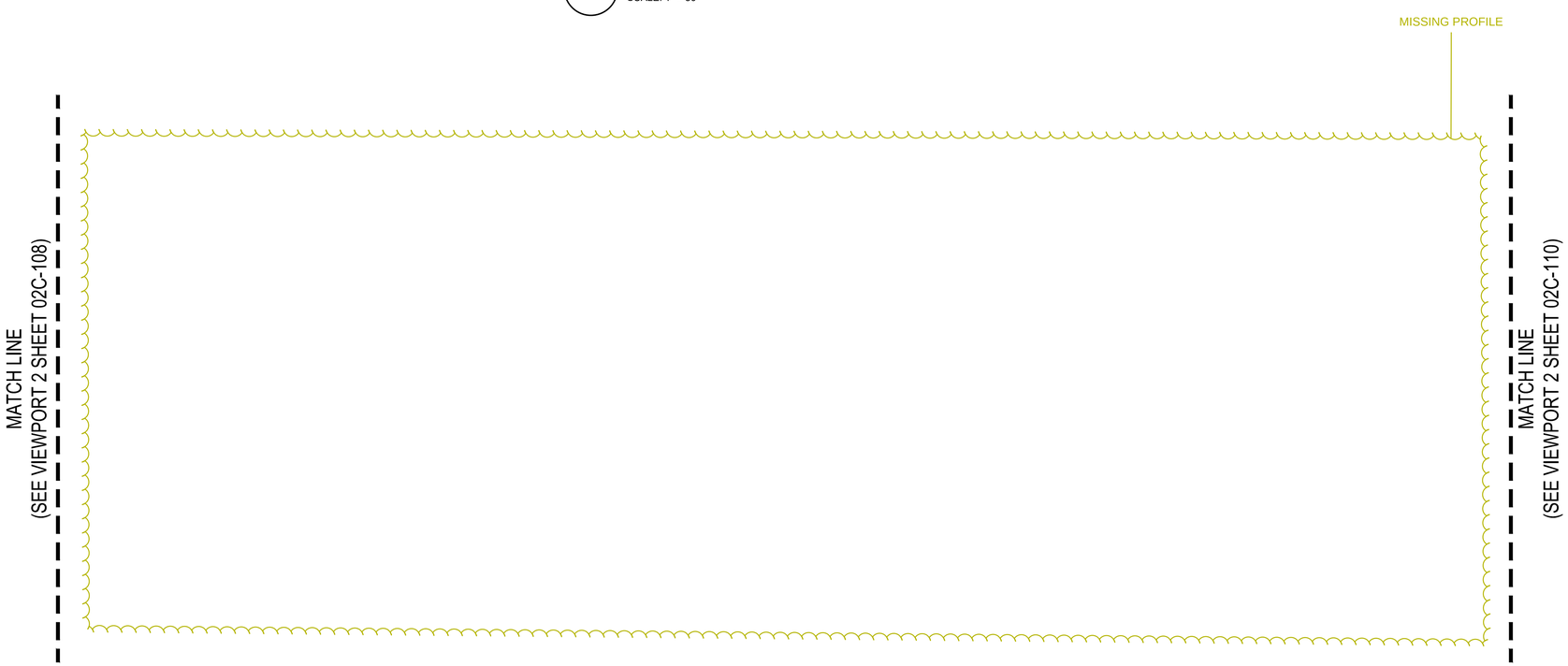

2 PROFILE - SHEET 9
SCALE: 1" = 50'

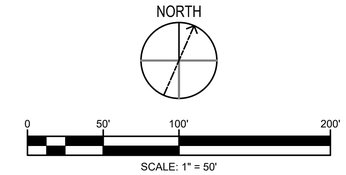

LEGEND

W W	EXISTING WATER LINE
SS SS	EXISTING SANITARY SEWER LINE
G G	EXISTING GAS LINE
OHE	EXISTING OVERHEAD ELECTRIC
UGE	EXISTING UNDERGROUND ELECTRIC
X	EXISTING SECURITY FENCE
XXXX	EXISTING CONTOUR
	EXISTING ASPHALT PAVEMENT
	EXISTING CONCRETE PAVEMENT

KEYED NOTES

1. PROPOSED TRENCH ALIGNMENT.
2. PROPOSED TRENCHLESS ALIGNMENT.
3. PROPOSED EMERGENCY FUEL SHUT OFF.

GENERAL NOTES

1. CONTRACTOR TO VERIFY LOCATIONS OF EXISTING UTILITIES AND ALL SURVEY INFORMATION PRIOR TO CONSTRUCTION.
2. CONTRACTOR SHALL ADJUST MANHOLES AND VALVE BOXES WITHIN PROJECT LIMIT TO FINISH GRADE.

EXCAVATION NOTE

CONTRACTOR AND/OR CONTRACTOR'S INDEPENDENTLY RETAINED EMPLOYEE OR STRUCTURAL DESIGN/GEOTECHNICAL/SAFETY/EQUIPMENT CONSULTANT, IF ANY, SHALL REVIEW THESE PLANS AND AVAILABLE GEOTECHNICAL INFORMATION AND THE ANTICIPATED INSTALLATION SITE(S) WITHIN THE PROJECT WORK AREA IN ORDER TO IMPLEMENT CONTRACTORS TRENCH EXCAVATION SAFETY PROTECTION SYSTEMS, PROGRAMS AND/OR PROCEDURES. THE CONTRACTORS IMPLEMENTATION OF THE SYSTEMS, PROGRAMS AND/OR PROCEDURES SHALL PROVIDE FOR ADEQUATE TRENCH EXCAVATION SAFETY PROTECTION THAT COMPLIES WITH, AS A MINIMUM OSHA STANDARDS FOR TRENCH EXCAVATIONS. CONTRACTOR AND/OR CONTRACTORS INDEPENDENTLY RETAINED EMPLOYEE OR SAFETY CONSULTANT SHALL IMPLEMENT A TRENCH SAFETY PROGRAM IN ACCORDANCE WITHIN OSHA STANDARDS GOVERNING THE PRESENCE AND ACTIVITIES OF INDIVIDUALS WORKING IN AND AROUND TRENCH EXCAVATION.

G. ROMERO

THIS DOCUMENT IS RELEASED FOR THE PURPOSE OF 35% DESIGN REVIEW UNDER THE AUTHORITY OF RICHARD A WHITE, TX LICENSE #86423 ON 09/20/23. IT IS NOT FOR CONSTRUCTION.

35% DESIGN

NOT FOR CONSTRUCTION

PROJECT INFORMATION

DESIGN EFSO REPAIRS AT VARIOUS FUELS FACILITIES - DESIGN EFSO REPAIRS TO HS-4 (Hydrant System #4)

ANDERSEN AIR FORCE BASE, GUAM

REVISIONS

MARK	DATE	DESCRIPTION

MANAGEMENT INFORMATION

ISSUE DATE: 09/20/2023
DESIGN GROUP: HDR
DESIGNED BY: R. WHITE
DRAWN BY: G. GUERRA
CHECKED BY:
DESIGN FILE LOCATION: 10374683

SHEET TITLE

CIVIL SITE PLAN AND PROFILE SHEET 9

SHEET NUMBER

04C-109

SHEET OF

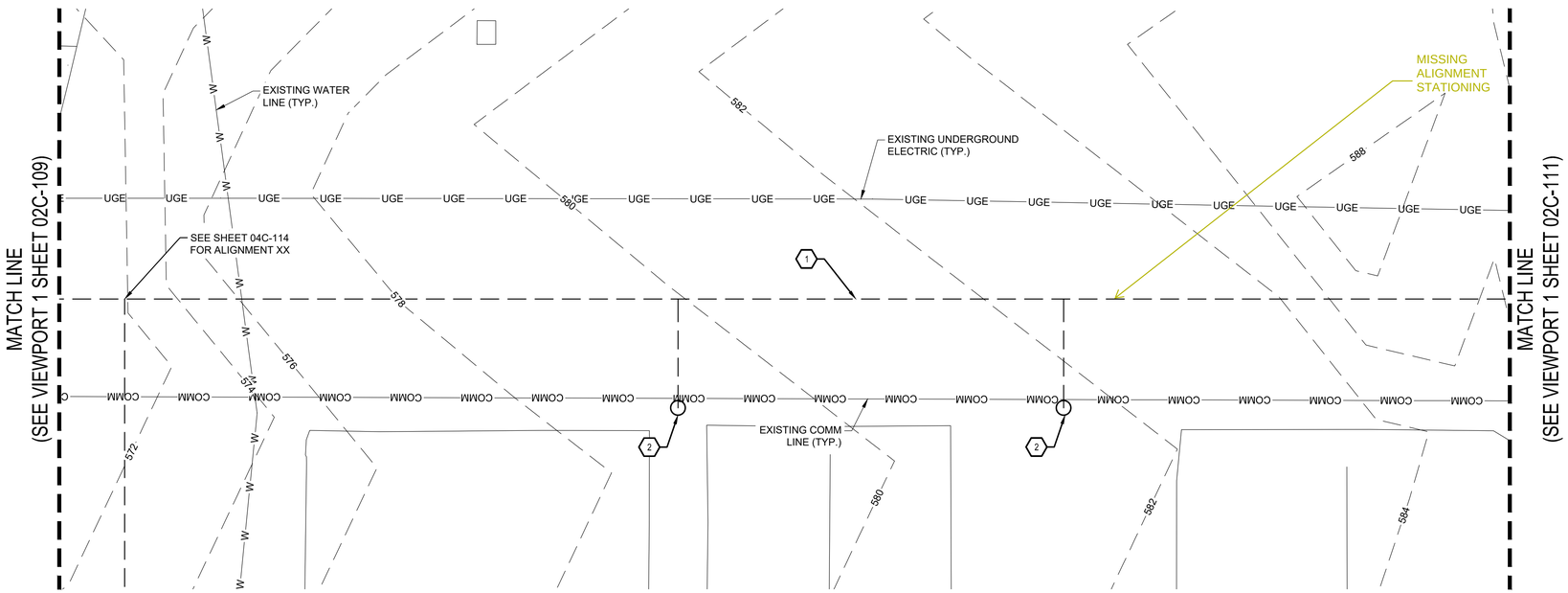

1 SITE PLAN - SHEET 10
SCALE: 1" = 50'

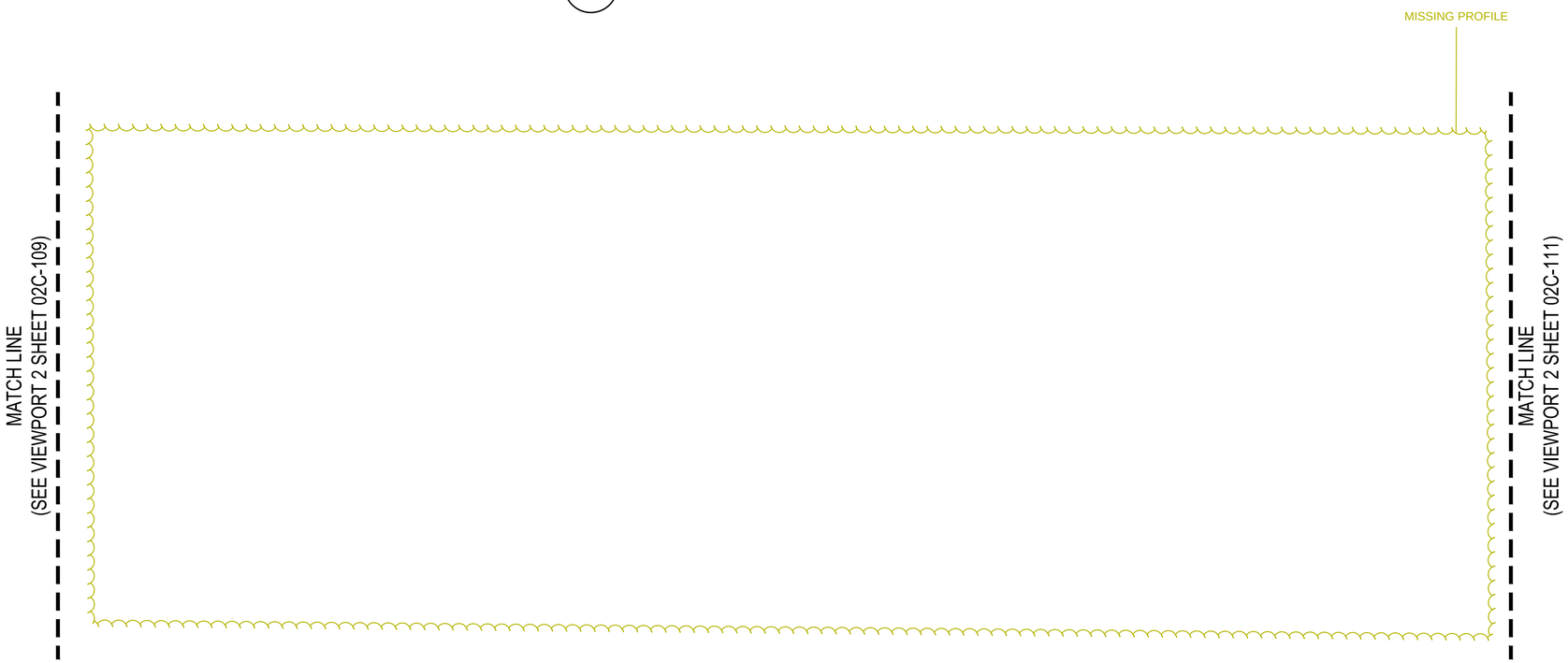

2 PROFILE - SHEET 10
SCALE: 1" = 50'

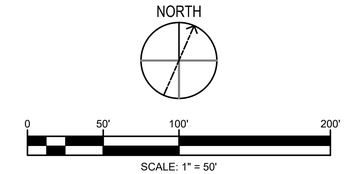

LEGEND

—W—W—	EXISTING WATER LINE
—SS—SS—	EXISTING SANITARY SEWER LINE
—G—G—	EXISTING GAS LINE
—OHE—	EXISTING OVERHEAD ELECTRIC
—UGE—	EXISTING UNDERGROUND ELECTRIC
—X—	EXISTING SECURITY FENCE
— — XXXX — —	EXISTING CONTOUR
	EXISTING ASPHALT PAVEMENT
	EXISTING CONCRETE PAVEMENT

KEYED NOTES

1. PROPOSED TRENCH ALIGNMENT.
2. PROPOSED EMERGENCY FUEL SHUT OFF.

GENERAL NOTES

1. CONTRACTOR TO VERIFY LOCATIONS OF EXISTING UTILITIES AND ALL SURVEY INFORMATION PRIOR TO CONSTRUCTION.
2. CONTRACTOR SHALL ADJUST MANHOLES AND VALVE BOXES WITHIN PROJECT LIMIT TO FINISH GRADE.

EXCAVATION NOTE

CONTRACTOR AND/OR CONTRACTOR'S INDEPENDENTLY RETAINED EMPLOYEE OR STRUCTURAL DESIGN/GEOTECHNICAL/SAFETY/EQUIPMENT CONSULTANT, IF ANY, SHALL REVIEW THESE PLANS AND AVAILABLE GEOTECHNICAL INFORMATION AND THE ANTICIPATED INSTALLATION SITE(S) WITHIN THE PROJECT WORK AREA IN ORDER TO IMPLEMENT CONTRACTORS TRENCH EXCAVATION SAFETY PROTECTION SYSTEMS, PROGRAMS AND/OR PROCEDURES. THE CONTRACTORS IMPLEMENTATION OF THE SYSTEMS, PROGRAMS AND/OR PROCEDURES SHALL PROVIDE FOR ADEQUATE TRENCH EXCAVATION SAFETY PROTECTION THAT COMPLIES WITH, AS A MINIMUM OSHA STANDARDS FOR TRENCH EXCAVATIONS. CONTRACTOR AND/OR CONTRACTORS INDEPENDENTLY RETAINED EMPLOYEE OR SAFETY CONSULTANT SHALL IMPLEMENT A TRENCH SAFETY PROGRAM IN ACCORDANCE WITHIN OSHA STANDARDS GOVERNING THE PRESENCE AND ACTIVITIES OF INDIVIDUALS WORKING IN AND AROUND TRENCH EXCAVATION.

THIS DOCUMENT IS RELEASED FOR THE PURPOSE OF 35% DESIGN REVIEW UNDER THE AUTHORITY OF RICHARD A WHITE, TX LICENSE #86423 ON 09/20/23. IT IS NOT FOR CONSTRUCTION.

35% DESIGN

NOT FOR CONSTRUCTION

PROJECT INFORMATION

DESIGN EFSO REPAIRS AT VARIOUS FUELS FACILITIES - DESIGN EFSO REPAIRS TO HS-4 (Hydrant System #4)

ANDERSEN AIR FORCE BASE, GUAM

REVISIONS

MARK	DATE	DESCRIPTION

MANAGEMENT INFORMATION

ISSUE DATE: 09/20/2023
DESIGN GROUP: HDR
DESIGNED BY: R. WHITE
DRAWN BY: G. GUERRA
CHECKED BY: G. ROMERO
DESIGN FILE LOCATION: 10374683

SHEET TITLE

CIVIL
SITE PLAN
AND PROFILE
SHEET 10

SHEET NUMBER

04C-110

SHEET OF

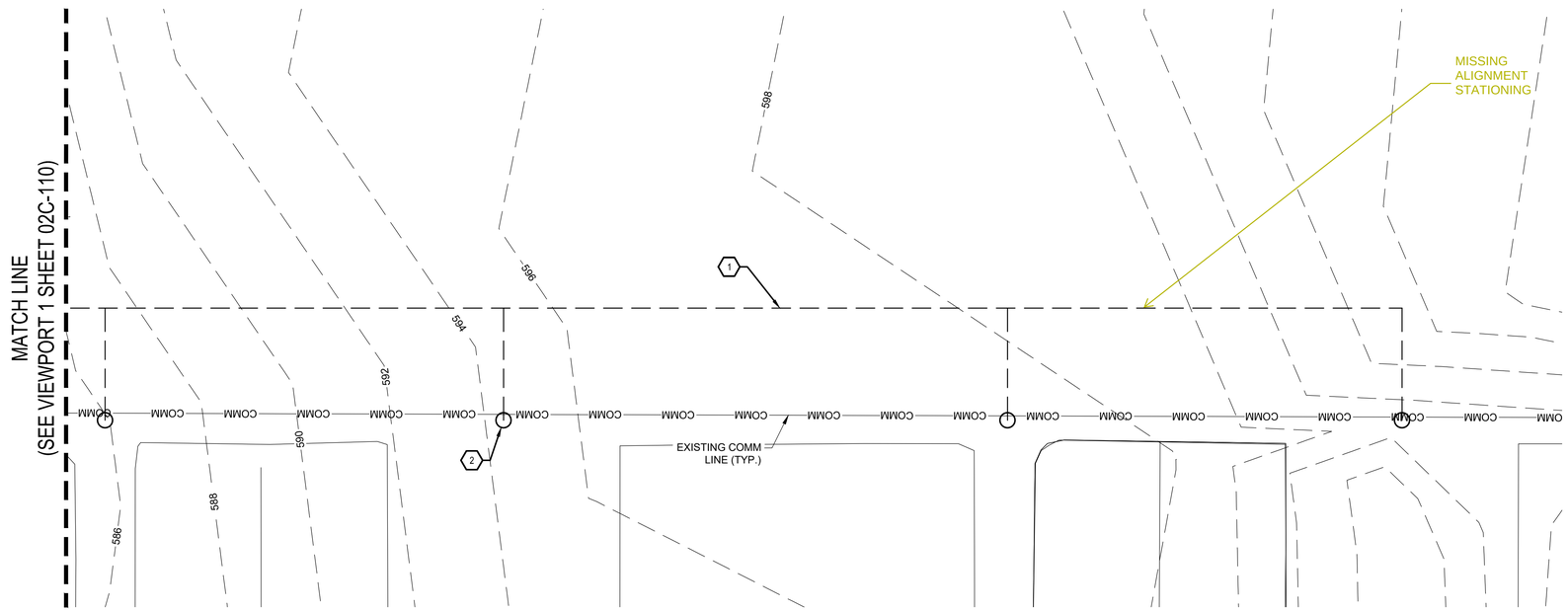

1 SITE PLAN - SHEET 11
SCALE: 1" = 50'

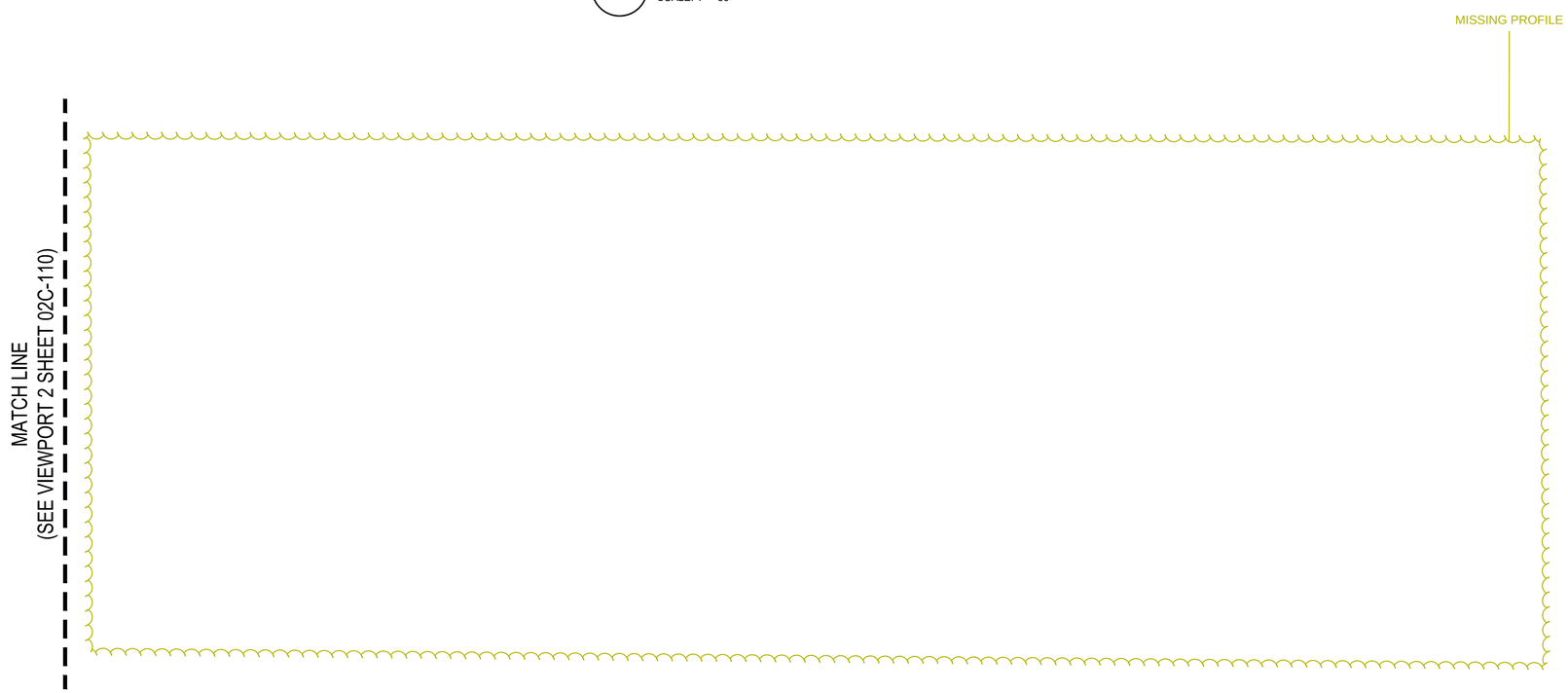

2 PROFILE - SHEET 11
SCALE: 1" = 50'

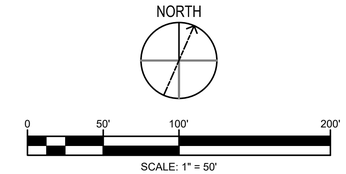

LEGEND

—W—W—	EXISTING WATER LINE
—SS—SS—	EXISTING SANITARY SEWER LINE
—G—G—	EXISTING GAS LINE
—OHE—	EXISTING OVERHEAD ELECTRIC
—UGE—	EXISTING UNDERGROUND ELECTRIC
—X—	EXISTING SECURITY FENCE
— — XXXX — —	EXISTING CONTOUR
	EXISTING ASPHALT PAVEMENT
	EXISTING CONCRETE PAVEMENT

KEYED NOTES

1. PROPOSED TRENCH ALIGNMENT.
2. PROPOSED EMERGENCY FUEL SHUT OFF.

GENERAL NOTES

1. CONTRACTOR TO VERIFY LOCATIONS OF EXISTING UTILITIES AND ALL SURVEY INFORMATION PRIOR TO CONSTRUCTION.
2. CONTRACTOR SHALL ADJUST MANHOLES AND VALVE BOXES WITHIN PROJECT LIMIT TO FINISH GRADE.

EXCAVATION NOTE

CONTRACTOR AND/OR CONTRACTOR'S INDEPENDENTLY RETAINED EMPLOYEE OR STRUCTURAL DESIGN/GEOTECHNICAL/SAFETY/EQUIPMENT CONSULTANT, IF ANY, SHALL REVIEW THESE PLANS AND AVAILABLE GEOTECHNICAL INFORMATION AND THE ANTICIPATED INSTALLATION SITE(S) WITHIN THE PROJECT WORK AREA IN ORDER TO IMPLEMENT CONTRACTORS TRENCH EXCAVATION SAFETY PROTECTION SYSTEMS, PROGRAMS AND/OR PROCEDURES. THE CONTRACTORS IMPLEMENTATION OF THE SYSTEMS, PROGRAMS AND/OR PROCEDURES SHALL PROVIDE FOR ADEQUATE TRENCH EXCAVATION SAFETY PROTECTION THAT COMPLIES WITH, AS A MINIMUM OSHA STANDARDS FOR TRENCH EXCAVATIONS. CONTRACTOR AND/OR CONTRACTORS INDEPENDENTLY RETAINED EMPLOYEE OR SAFETY CONSULTANT SHALL IMPLEMENT A TRENCH SAFETY PROGRAM IN ACCORDANCE WITHIN OSHA STANDARDS GOVERNING THE PRESENCE AND ACTIVITIES OF INDIVIDUALS WORKING IN AND AROUND TRENCH EXCAVATION.

G. ROMERO

THIS DOCUMENT IS RELEASED FOR THE PURPOSE OF 35% DESIGN REVIEW UNDER THE AUTHORITY OF RICHARD A WHITE, TX LICENSE #86423 ON 09/20/23. IT IS NOT FOR CONSTRUCTION.

35% DESIGN

NOT FOR CONSTRUCTION

PROJECT INFORMATION

DESIGN EFSO REPAIRS AT VARIOUS FUELS FACILITIES - DESIGN EFSO REPAIRS TO HS-4 (Hydrant System #4)

ANDERSEN AIR FORCE BASE, GUAM

REVISIONS

MARK	DATE	DESCRIPTION

MANAGEMENT INFORMATION

ISSUE DATE: 09/20/2023
DESIGN GROUP: HDR
DESIGNED BY: R. WHITE
DRAWN BY: G. GUERRA
CHECKED BY:
DESIGN FILE LOCATION: 10374683

SHEET TITLE

CIVIL
SITE PLAN
AND PROFILE
SHEET 11

SHEET NUMBER

04C-111

SHEET OF

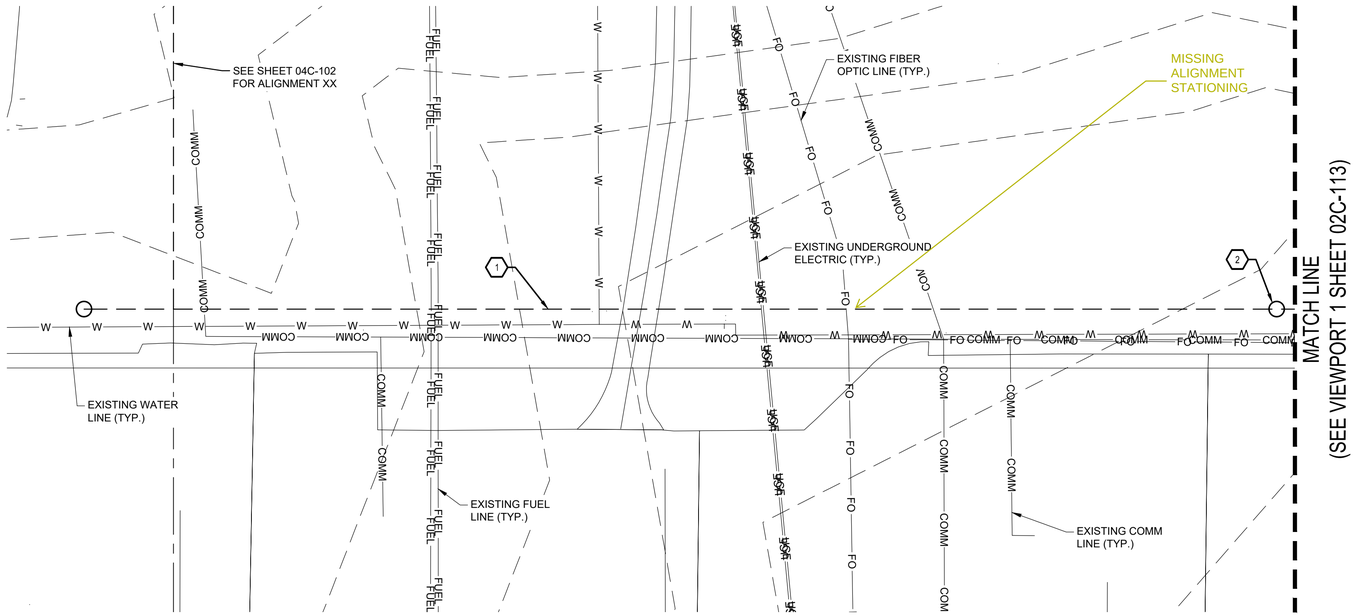

1 SITE PLAN - SHEET 12
SCALE: 1" = 50'

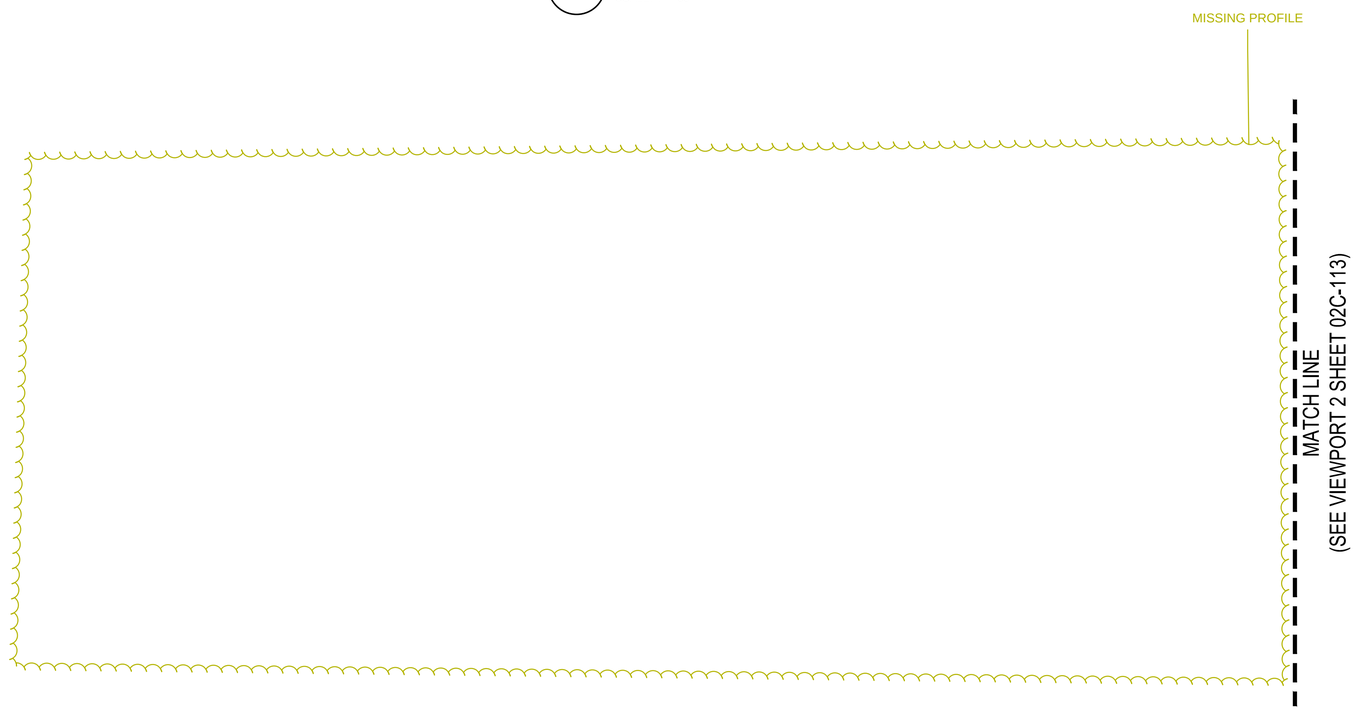

2 PROFILE - SHEET 12
SCALE: 1" = 50'

NORTH

0 50' 100' 200'
SCALE: 1" = 50'

LEGEND

W W	EXISTING WATER LINE
SS SS	EXISTING SANITARY SEWER LINE
G G	EXISTING GAS LINE
OHE	EXISTING OVERHEAD ELECTRIC
UGE	EXISTING UNDERGROUND ELECTRIC
X	EXISTING SECURITY FENCE
XXXX	EXISTING CONTOUR
	EXISTING ASPHALT PAVEMENT
	EXISTING CONCRETE PAVEMENT

KEYED NOTES (#)

1. PROPOSED TRENCH ALIGNMENT.
2. PROPOSED EMERGENCY FUEL SHUT OFF.

GENERAL NOTES

1. CONTRACTOR TO VERIFY LOCATIONS OF EXISTING UTILITIES AND ALL SURVEY INFORMATION PRIOR TO CONSTRUCTION.
2. CONTRACTOR SHALL ADJUST MANHOLES AND VALVE BOXES WITHIN PROJECT LIMIT TO FINISH GRADE.

EXCAVATION NOTE

CONTRACTOR AND/OR CONTRACTOR'S INDEPENDENTLY RETAINED EMPLOYEE OR STRUCTURAL DESIGN/GEOTECHNICAL/SAFETY/EQUIPMENT CONSULTANT, IF ANY, SHALL REVIEW THESE PLANS AND AVAILABLE GEOTECHNICAL INFORMATION AND THE ANTICIPATED INSTALLATION SITE(S) WITHIN THE PROJECT WORK AREA IN ORDER TO IMPLEMENT CONTRACTORS TRENCH EXCAVATION SAFETY PROTECTION SYSTEMS, PROGRAMS AND/OR PROCEDURES. THE CONTRACTORS IMPLEMENTATION OF THE SYSTEMS, PROGRAMS AND/OR PROCEDURES SHALL PROVIDE FOR ADEQUATE TRENCH EXCAVATION SAFETY PROTECTION THAT COMPLIES WITH, AS A MINIMUM OSHA STANDARDS FOR TRENCH EXCAVATIONS. CONTRACTOR AND/OR CONTRACTORS INDEPENDENTLY RETAINED EMPLOYEE OR SAFETY CONSULTANT SHALL IMPLEMENT A TRENCH SAFETY PROGRAM IN ACCORDANCE WITHIN OSHA STANDARDS GOVERNING THE PRESENCE AND ACTIVITIES OF INDIVIDUALS WORKING IN AND AROUND TRENCH EXCAVATION.

G. ROMERO

THIS DOCUMENT IS RELEASED FOR THE PURPOSE OF 35% DESIGN REVIEW UNDER THE AUTHORITY OF RICHARD A WHITE, TX LICENSE #86423 ON 09/20/23. IT IS NOT FOR CONSTRUCTION.

35% DESIGN
NOT FOR CONSTRUCTION

PROJECT INFORMATION
DESIGN EFSO REPAIRS AT VARIOUS FUELS FACILITIES - DESIGN EFSO REPAIRS TO HS-4 (Hydrant System #4)
ANDERSEN AIR FORCE BASE, GUAM

REVISIONS

MARK	DATE	DESCRIPTION

MANAGEMENT INFORMATION
ISSUE DATE: 09/20/2023
DESIGN GROUP: HDR
DESIGNED BY: R. WHITE
DRAWN BY: G. GUERRA
CHECKED BY:
DESIGN FILE LOCATION: 10374683

SHEET TITLE
CIVIL
SITE PLAN
AND PROFILE
SHEET 12

SHEET NUMBER
04C-112
SHEET OF

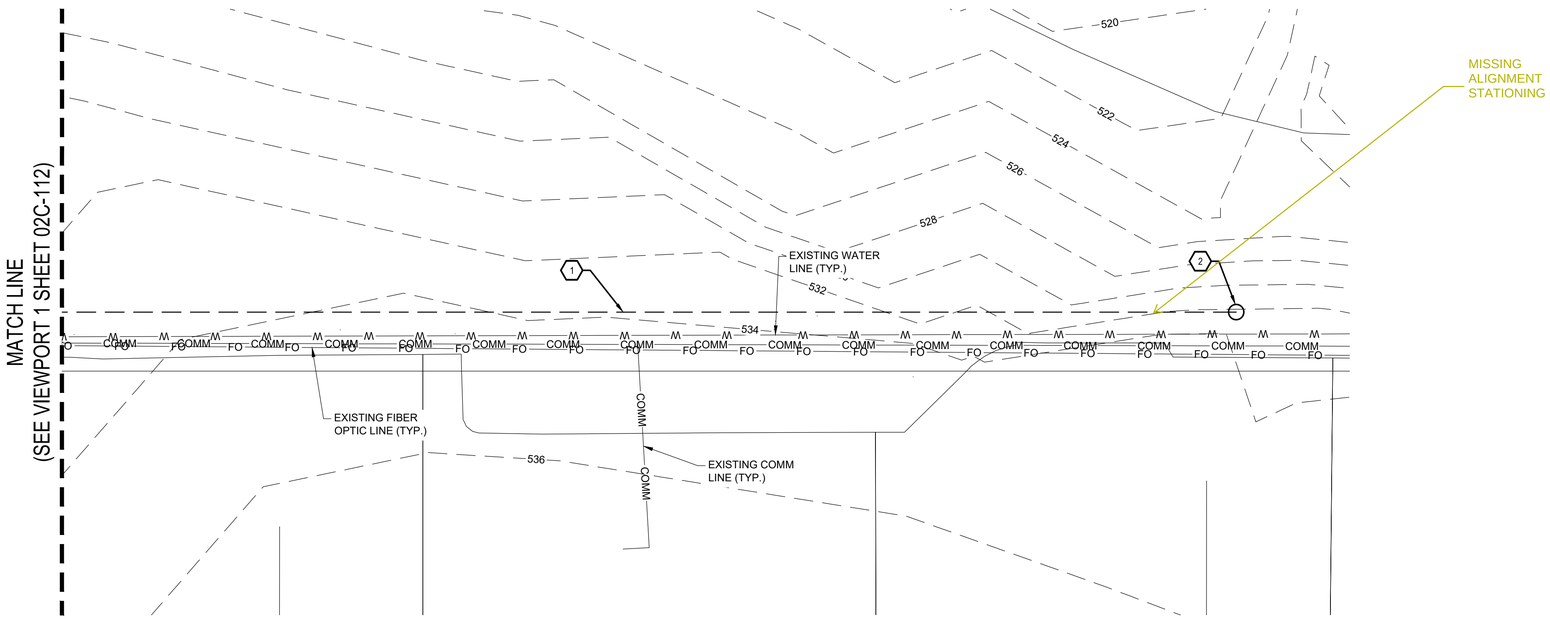

1 SITE PLAN - SHEET 13
SCALE: 1" = 50'

2 PROFILE - SHEET 13
SCALE: 1" = 50'

NORTH

0 50' 100' 200'
SCALE: 1" = 50'

LEGEND

W W	EXISTING WATER LINE
SS SS	EXISTING SANITARY SEWER LINE
G G	EXISTING GAS LINE
OHE	EXISTING OVERHEAD ELECTRIC
UGE	EXISTING UNDERGROUND ELECTRIC
X	EXISTING SECURITY FENCE
XXXX	EXISTING CONTOUR
	EXISTING ASPHALT PAVEMENT
	EXISTING CONCRETE PAVEMENT

KEYED NOTES

1. PROPOSED TRENCH ALIGNMENT.
2. PROPOSED EMERGENCY FUEL SHUT OFF.

GENERAL NOTES

1. CONTRACTOR TO VERIFY LOCATIONS OF EXISTING UTILITIES AND ALL SURVEY INFORMATION PRIOR TO CONSTRUCTION.
2. CONTRACTOR SHALL ADJUST MANHOLES AND VALVE BOXES WITHIN PROJECT LIMIT TO FINISH GRADE.

EXCAVATION NOTE

CONTRACTOR AND/OR CONTRACTOR'S INDEPENDENTLY RETAINED EMPLOYEE OR STRUCTURAL DESIGN/GEOTECHNICAL/SAFETY/EQUIPMENT CONSULTANT, IF ANY, SHALL REVIEW THESE PLANS AND AVAILABLE GEOTECHNICAL INFORMATION AND THE ANTICIPATED INSTALLATION SITE(S) WITHIN THE PROJECT WORK AREA IN ORDER TO IMPLEMENT CONTRACTORS TRENCH EXCAVATION SAFETY PROTECTION SYSTEMS, PROGRAMS AND/OR PROCEDURES. THE CONTRACTORS IMPLEMENTATION OF THE SYSTEMS, PROGRAMS AND/OR PROCEDURES SHALL PROVIDE FOR ADEQUATE TRENCH EXCAVATION SAFETY PROTECTION THAT COMPLIES WITH, AS A MINIMUM OSHA STANDARDS FOR TRENCH EXCAVATIONS. CONTRACTOR AND/OR CONTRACTORS INDEPENDENTLY RETAINED EMPLOYEE OR SAFETY CONSULTANT SHALL IMPLEMENT A TRENCH SAFETY PROGRAM IN ACCORDANCE WITHIN OSHA STANDARDS GOVERNING THE PRESENCE AND ACTIVITIES OF INDIVIDUALS WORKING IN AND AROUND TRENCH EXCAVATION.

THIS DOCUMENT IS RELEASED FOR THE PURPOSE OF 35% DESIGN REVIEW UNDER THE AUTHORITY OF RICHARD A WHITE, TX LICENSE #86423 ON 09/20/23. IT IS NOT FOR CONSTRUCTION.

35% DESIGN

NOT FOR CONSTRUCTION

PROJECT INFORMATION

DESIGN EFSO REPAIRS AT VARIOUS FUELS FACILITIES - DESIGN EFSO REPAIRS TO HS-4 (Hydrant System #4)

ANDERSEN AIR FORCE BASE, GUAM

REVISIONS

MARK	DATE	DESCRIPTION

MANAGEMENT INFORMATION

ISSUE DATE: 09/20/2023
DESIGN GROUP: HDR
DESIGNED BY: R. WHITE
DRAWN BY: G. GUERRA
CHECKED BY: G. ROMERO
DESIGN FILE LOCATION: 10374683

SHEET TITLE

CIVIL
SITE PLAN
AND PROFILE
SHEET 13

SHEET NUMBER

04C-113

SHEET OF

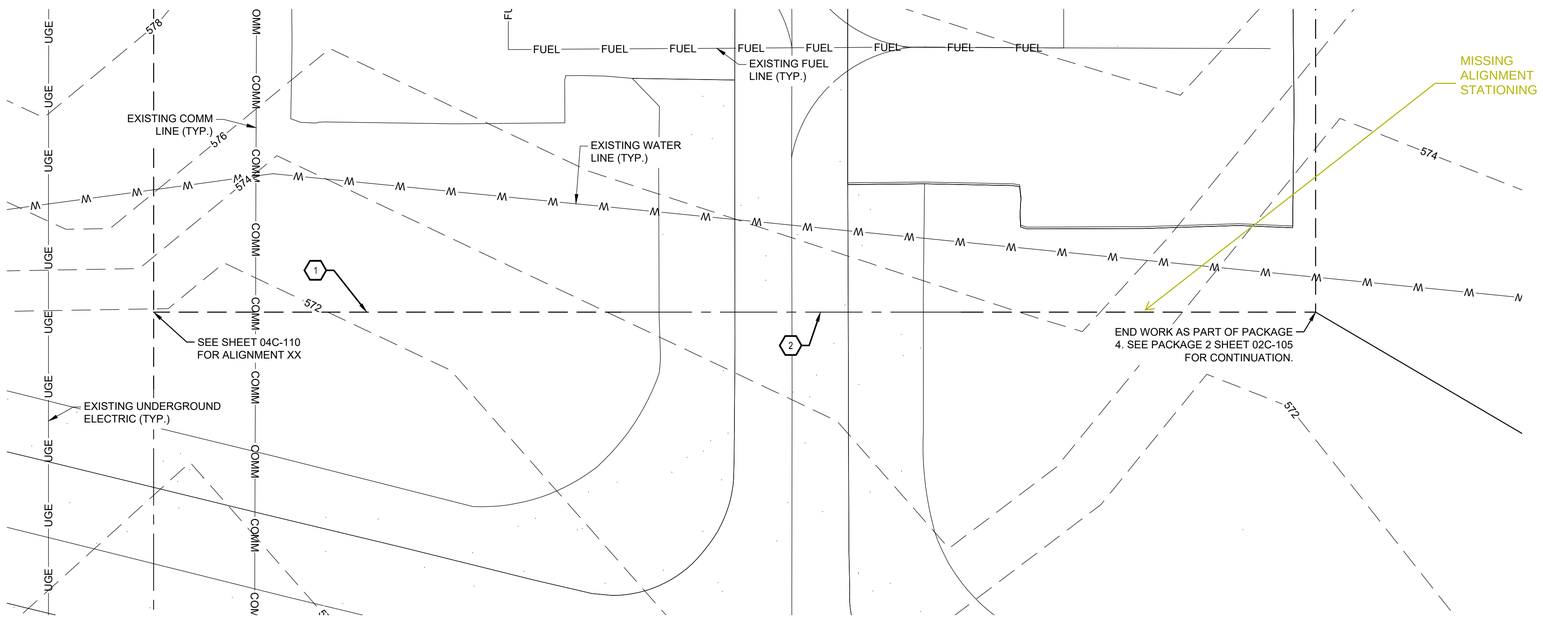

1 SITE PLAN - SHEET 14
SCALE: 1" = 50'

MISSING PROFILE

2 PROFILE - SHEET 14
SCALE: 1" = 50'

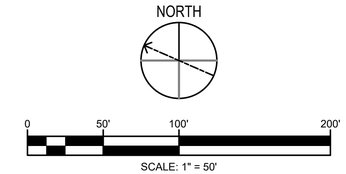

LEGEND

—W—W—	EXISTING WATER LINE
—SS—SS—	EXISTING SANITARY SEWER LINE
—G—G—	EXISTING GAS LINE
—OHE—	EXISTING OVERHEAD ELECTRIC
—UGE—	EXISTING UNDERGROUND ELECTRIC
—X—	EXISTING SECURITY FENCE
— —XXXX— —	EXISTING CONTOUR
	EXISTING ASPHALT PAVEMENT
	EXISTING CONCRETE PAVEMENT

KEYED NOTES

1. PROPOSED TRENCH ALIGNMENT.
2. PROPOSED TRENCHLESS ALIGNMENT.

GENERAL NOTES

1. CONTRACTOR TO VERIFY LOCATIONS OF EXISTING UTILITIES AND ALL SURVEY INFORMATION PRIOR TO CONSTRUCTION.
2. CONTRACTOR SHALL ADJUST MANHOLES AND VALVE BOXES WITHIN PROJECT LIMIT TO FINISH GRADE.

EXCAVATION NOTE

CONTRACTOR AND/OR CONTRACTOR'S INDEPENDENTLY RETAINED EMPLOYEE OR STRUCTURAL DESIGN/GEOTECHNICAL/SAFETY/EQUIPMENT CONSULTANT, IF ANY, SHALL REVIEW THESE PLANS AND AVAILABLE GEOTECHNICAL INFORMATION AND THE ANTICIPATED INSTALLATION SITE(S) WITHIN THE PROJECT WORK AREA IN ORDER TO IMPLEMENT CONTRACTORS TRENCH EXCAVATION SAFETY PROTECTION SYSTEMS, PROGRAMS AND/OR PROCEDURES. THE CONTRACTORS IMPLEMENTATION OF THE SYSTEMS, PROGRAMS AND/OR PROCEDURES SHALL PROVIDE FOR ADEQUATE TRENCH EXCAVATION SAFETY PROTECTION THAT COMPLIES WITH, AS A MINIMUM OSHA STANDARDS FOR TRENCH EXCAVATIONS. CONTRACTOR AND/OR CONTRACTORS INDEPENDENTLY RETAINED EMPLOYEE OR SAFETY CONSULTANT SHALL IMPLEMENT A TRENCH SAFETY PROGRAM IN ACCORDANCE WITHIN OSHA STANDARDS GOVERNING THE PRESENCE AND ACTIVITIES OF INDIVIDUALS WORKING IN AND AROUND TRENCH EXCAVATION.

G. ROMERO

THIS DOCUMENT IS RELEASED FOR THE PURPOSE OF 35% DESIGN REVIEW UNDER THE AUTHORITY OF RICHARD A WHITE, TX LICENSE #86423 ON 09/20/23. IT IS NOT FOR CONSTRUCTION.

35% DESIGN

NOT FOR CONSTRUCTION

PROJECT INFORMATION

DESIGN EFSO REPAIRS AT VARIOUS FUELS FACILITIES - DESIGN EFSO REPAIRS TO HS-4 (Hydrant System #4)

ANDERSEN AIR FORCE BASE, GUAM

REVISIONS

MARK	DATE	DESCRIPTION

MANAGEMENT INFORMATION

ISSUE DATE: 09/20/2023
DESIGN GROUP: HDR
DESIGNED BY: R. WHITE
DRAWN BY: G. GUERRA
CHECKED BY:
DESIGN FILE LOCATION: 10374683

SHEET TITLE

CIVIL SITE PLAN AND PROFILE SHEET 14

SHEET NUMBER

04C-114

SHEET OF

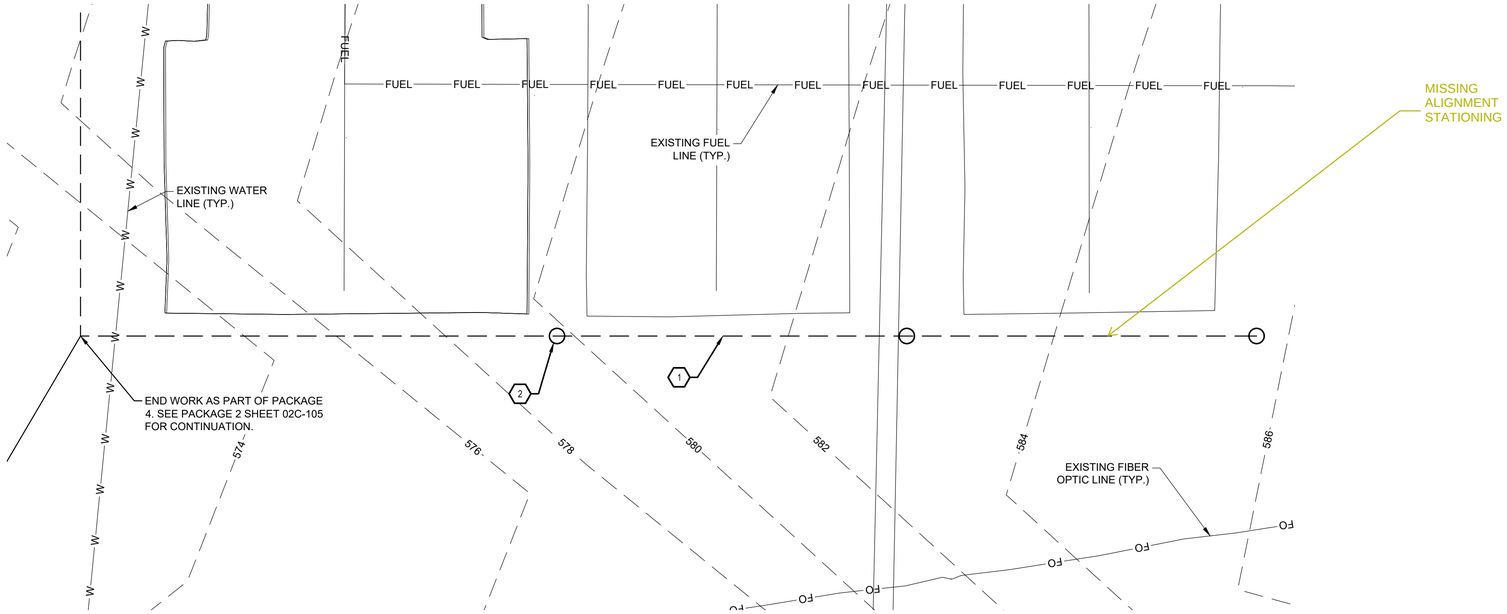

1 SITE PLAN - SHEET 15
SCALE: 1" = 50'

MISSING PROFILE

2 PROFILE - SHEET 15
SCALE: 1" = 50'

NORTH

0 50' 100' 200'
SCALE: 1" = 50'

LEGEND

—W—W—	EXISTING WATER LINE
—SS—SS—	EXISTING SANITARY SEWER LINE
—G—G—	EXISTING GAS LINE
—OHE—	EXISTING OVERHEAD ELECTRIC
—UGE—	EXISTING UNDERGROUND ELECTRIC
—X—	EXISTING SECURITY FENCE
— — XXXX — —	EXISTING CONTOUR
	EXISTING ASPHALT PAVEMENT
	EXISTING CONCRETE PAVEMENT

KEYED NOTES ⟨#⟩

1. PROPOSED TRENCH ALIGNMENT.
2. PROPOSED EMERGENCY FUEL SHUT OFF.

GENERAL NOTES

1. CONTRACTOR TO VERIFY LOCATIONS OF EXISTING UTILITIES AND ALL SURVEY INFORMATION PRIOR TO CONSTRUCTION.
2. CONTRACTOR SHALL ADJUST MANHOLES AND VALVE BOXES WITHIN PROJECT LIMIT TO FINISH GRADE.

EXCAVATION NOTE

CONTRACTOR AND/OR CONTRACTOR'S INDEPENDENTLY RETAINED EMPLOYEE OR STRUCTURAL DESIGN/GEOTECHNICAL/SAFETY/EQUIPMENT CONSULTANT, IF ANY, SHALL REVIEW THESE PLANS AND AVAILABLE GEOTECHNICAL INFORMATION AND THE ANTICIPATED INSTALLATION SITE(S) WITHIN THE PROJECT WORK AREA IN ORDER TO IMPLEMENT CONTRACTORS TRENCH EXCAVATION SAFETY PROTECTION SYSTEMS, PROGRAMS AND/OR PROCEDURES. THE CONTRACTORS IMPLEMENTATION OF THE SYSTEMS, PROGRAMS AND/OR PROCEDURES SHALL PROVIDE FOR ADEQUATE TRENCH EXCAVATION SAFETY PROTECTION THAT COMPLIES WITH, AS A MINIMUM OSHA STANDARDS FOR TRENCH EXCAVATIONS. CONTRACTOR AND/OR CONTRACTORS INDEPENDENTLY RETAINED EMPLOYEE OR SAFETY CONSULTANT SHALL IMPLEMENT A TRENCH SAFETY PROGRAM IN ACCORDANCE WITHIN OSHA STANDARDS GOVERNING THE PRESENCE AND ACTIVITIES OF INDIVIDUALS WORKING IN AND AROUND TRENCH EXCAVATION.

G. ROMERO

THIS DOCUMENT IS RELEASED FOR THE PURPOSE OF 35% DESIGN REVIEW UNDER THE AUTHORITY OF RICHARD A WHITE, TX LICENSE #86423 ON 09/20/23. IT IS NOT FOR CONSTRUCTION.

35% DESIGN

NOT FOR CONSTRUCTION

PROJECT INFORMATION

DESIGN EFSO REPAIRS AT VARIOUS FUELS FACILITIES - DESIGN EFSO REPAIRS TO HS-4 (Hydrant System #4)

ANDERSEN AIR FORCE BASE, GUAM

REVISIONS

MARK	DATE	DESCRIPTION

MANAGEMENT INFORMATION

ISSUE DATE: 09/20/2023
DESIGN GROUP: HDR
DESIGNED BY: R. WHITE
DRAWN BY: G. GUERRA
CHECKED BY:
DESIGN FILE LOCATION: 10374683

SHEET TITLE

CIVIL
SITE PLAN
AND PROFILE
SHEET 15

SHEET NUMBER

04C-115

SHEET OF

add genera notes.

KEY NOTES:

1. EXISTING FACU TO BE REPLACED.
2. EXISTING MONACO TRANSMITTER TO BE EXPANDED AND RE-USED.
3. EXISTING BOOSTER POWER SUPPLY TO REMAIN OR TO BE REPLACED TO ENSURE COMPATIBILITY WITH NEW FACU.

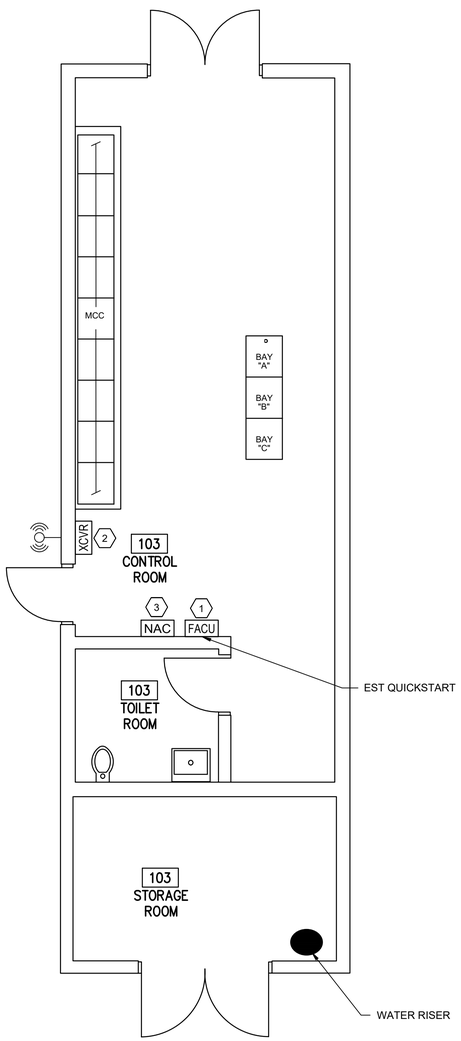

1 / FA101 PUMPHOUSE 4 - FIRE ALARM PLAN

SCALE: 1 : 50

scale

BT-XF

FIRE ALARM SYMBOLS LEGEND

FACU	FIRE ALARM CONTROL UNIT
NAC	NAC EXTENDER BOOSTER POWER SUPPLY
XCVR	MONACO BASE SIGNAL TRANSCEIVER (BT-X)
	OMNIDIRECTIONAL ANTENNA

THIS DOCUMENT IS RELEASED FOR THE PURPOSE OF 35% DESIGN REVIEW UNDER THE AUTHORITY OF DOUGLAS EMANUS, TX LICENSE #33105 ON 09/08/23. IT IS NOT FOR CONSTRUCTION.

35% DESIGN

NOT FOR CONSTRUCTION

PROJECT INFORMATION

DESIGN EFSO REPAIRS AT VARIOUS FUELS FACILITIES - DESIGN EFSO REPAIRS TO HS-4 (Hydrant System #4)

ANDERSEN AIR FORCE BASE, GUAM

REVISIONS

MARK	DATE	DESCRIPTION

MANAGEMENT INFORMATION

ISSUE DATE: 09/09/2023
DESIGN GROUP: HDR
DESIGNED BY: D. EMANUS
DRAWN BY: J. MARTINEZ
CHECKED BY: R. MILLER
DESIGN FILE LOCATION: 10374683

SHEET TITLE

PUMPHOUSE 4
FIRE ALARM PLAN

SHEET NUMBER

FA101

SHEET - OF -

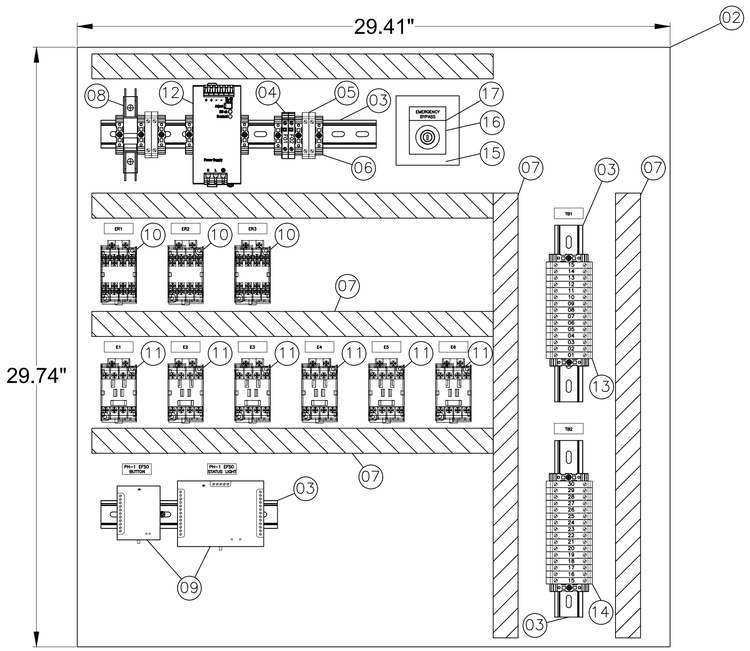

1 CONTROL BACK PANEL LAYOUT

ID	QTY	MFG	PART #	DESCRIPTION	NOTE
01	1	CG	CORNING SPH-01P	FIBER PATCH PANEL	
02	2	APS	CUSTOM	BACK PLATE, 29.74"Hx29.41"W	OR EQUAL
03	A/R	APS	APS	MOUNTING DIN RAIL	
04	2	APS	APS	FUSES	COMM HWD
05	2	APS	APS	1-TIER FUSED TERMINAL BLOCKS	
06	12	APS	APS	END CLAMPS	
07	A/R	APS	APS	1"X2" WIREWAY WITH LID	
08	1	APS	APS	INCOMING POWER CB,	SIZE FOR PS
09	4	AAL	AFL-80-TT-REL1-SM	CONTACT CLOSURE OPTICAL FIBER LINK QTY. 1 – PAIR (TX AND RX MODULES) QTY. 8 – 5V TTL DI (TX) QTY. 8 – 24VDC RELAYS, 1A (RX) SINGLE MODE (SM) FIBER INTERFACE 12VDC POWER IN (PLUG TYPE)	OR APPROVED EQUAL NEEDS TO BE ABLE TO PASS SIGNALS OVER FIBER
10	3	AB	700S-CF620DBC	SAFETY CONTROL RELAYS	
11	6	AB	700-CF400D	CONTROL RELAYS	
12	1	APS	APS	120V/12VDC POWER SUPPLY (PS), 60W	
13	15	APS	APS	1-TIER TERMINAL BLOCKS	
14	16	APS	APS	1-TIER TERMINAL BLOCKS	
15	1	HFM	E1PBXM4	1-HOLE PB BOX, 22.5mm, EXTRA DEEP	OR EQUAL
16	1	AB	800FM-KM21R	22 mm 2-POS KEYSWITCH, MAINTAINED BOTH WAYS, KEY HELD LEFT, NO CONTACTS, INCLUDE LABEL AS SHOWN	OR EQUAL
17	1	AB	800F-MX60	22 mm CONTACT BLOCK WITH LATCH, SCREW TERMINATION, 6 NO CONTACTS, INCLUDE LABEL AS SHOWN	OR EQUAL
18	6	AB	800FM-KM21	22 mm 2-POS KEYSWITCH, MAINTAINED BOTH WAYS, KEY HELD LEFT, NO/NC CONTACT, INCLUDE LABEL AS SHOWN	OR EQUAL
19	6	AB	800FP-P3	22 mm PILOT LIGHT, LED, GREEN, 12-130V AC/DC, PUSH TO TEST, INCLUDE LABEL AS SHOWN	OR EQUAL
20	6	AB	800FP-P4	22 mm PILOT LIGHT, LED, RED, 12-130V AC/DC, PUSH TO TEST, INCLUDE LABEL AS SHOWN	OR EQUAL
21	1	AB	800F-N5G	22 mm INTEGRATED LED MODULE, GREEN LED, PKG OF 10	OR EQUAL
22	1	AB	800F-N5R	22 mm INTEGRATED LED MODULE, RED LED, PKG OF 10	OR EQUAL
23	2	AB	800F-ALM	22 mm METAL MOUNTING LATCH, PACKAGE OF 10	OR EQUAL

3 BILL OF MATERIALS

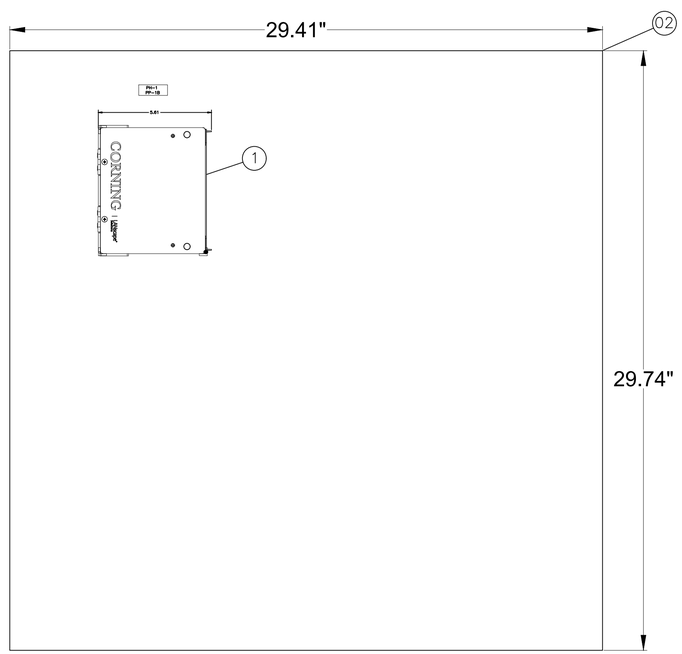

2 FIBER PATCH PANEL LAYOUT

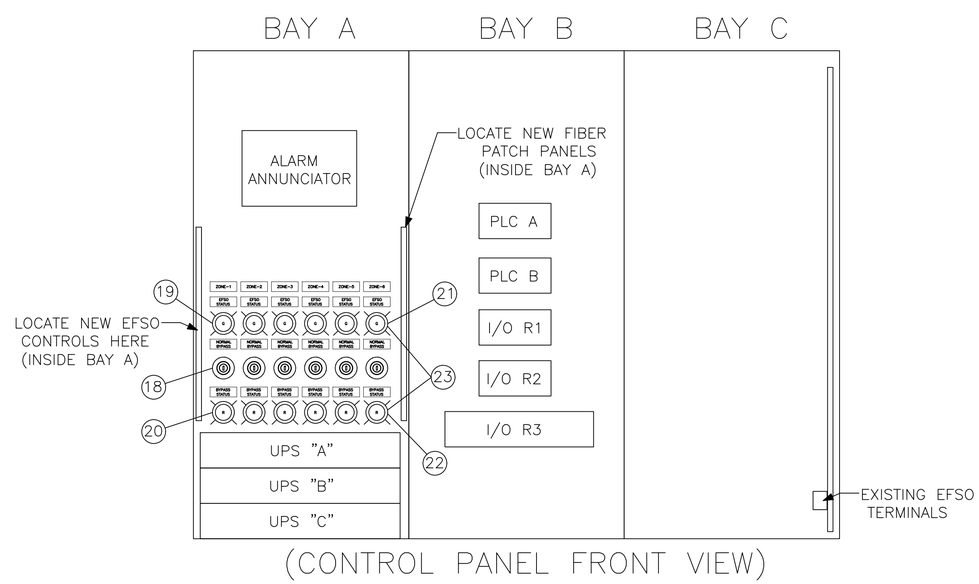

4 LOCATION OF NEW EFSO CONTROLS

GENERAL NOTES

1. THESE DRAWINGS SHALL BE READ IN CONJUNCTION WITH THE SPECIFICATION AND WITH SUCH OTHER WRITTEN INSTRUCTIONS AS MAY BE ISSUED DURING THE COURSE OF THE CONTRACT.
2. BOM ABBREVIATIONS:
   - 2.1. APS (AS PER SPECIFICATIONS): PROVIDE MANUFACTURER AND PART NUMBER THAT MEETS SPECIFICATIONS AND DESIGN REQUIREMENTS.
   - 2.2. A/R (AS REQUIRED): PROVIDE QUANTITIES AS REQUIRED.
   - 2.3. OR EQUAL: PROVIDE MANUFACTURER AND PART NUMBER THAT MEETS SPECIFICATIONS AND DESIGN REQUIREMENTS. NO APPROVAL NECESSARY.
   - 2.4. OR APPROVED EQUAL: PROVIDE MANUFACTURER AND PART NUMBER THAT MEETS SPECIFICATIONS AND DESIGN REQUIREMENTS. SUBSTITUTION BY APPROVAL.

KEYED NOTE

1. T.B.D..

THIS DOCUMENT IS RELEASED FOR THE PURPOSE OF 35% DESIGN REVIEW UNDER THE AUTHORITY OF STEPHEN E HORRAS TX LICENSE #118913 ON 09/20/23. IT IS NOT FOR CONSTRUCTION.

35% DESIGN

NOT FOR CONSTRUCTION

PROJECT INFORMATION

DESIGN EFSO REPAIRS AT VARIOUS FUELS FACILITIES - DESIGN EFSO REPAIRS TO HS-4 (Hydrant System #4)

ANDERSEN AIR FORCE BASE, GUAM

REVISIONS

MARK	DATE	DESCRIPTION

MANAGEMENT INFORMATION

ISSUE DATE: 09/20/2023
DESIGN GROUP: HDR
DESIGNED BY: S. HORRAS
DRAWN BY: S. HORRAS
CHECKED BY: T.B.D.
DESIGN FILE LOCATION: 10374683

SHEET TITLE

EFSO CONTROL PANEL LAYOUT & BILL OF MATERIAL

SHEET NUMBER

Y-101

SHEET - OF -

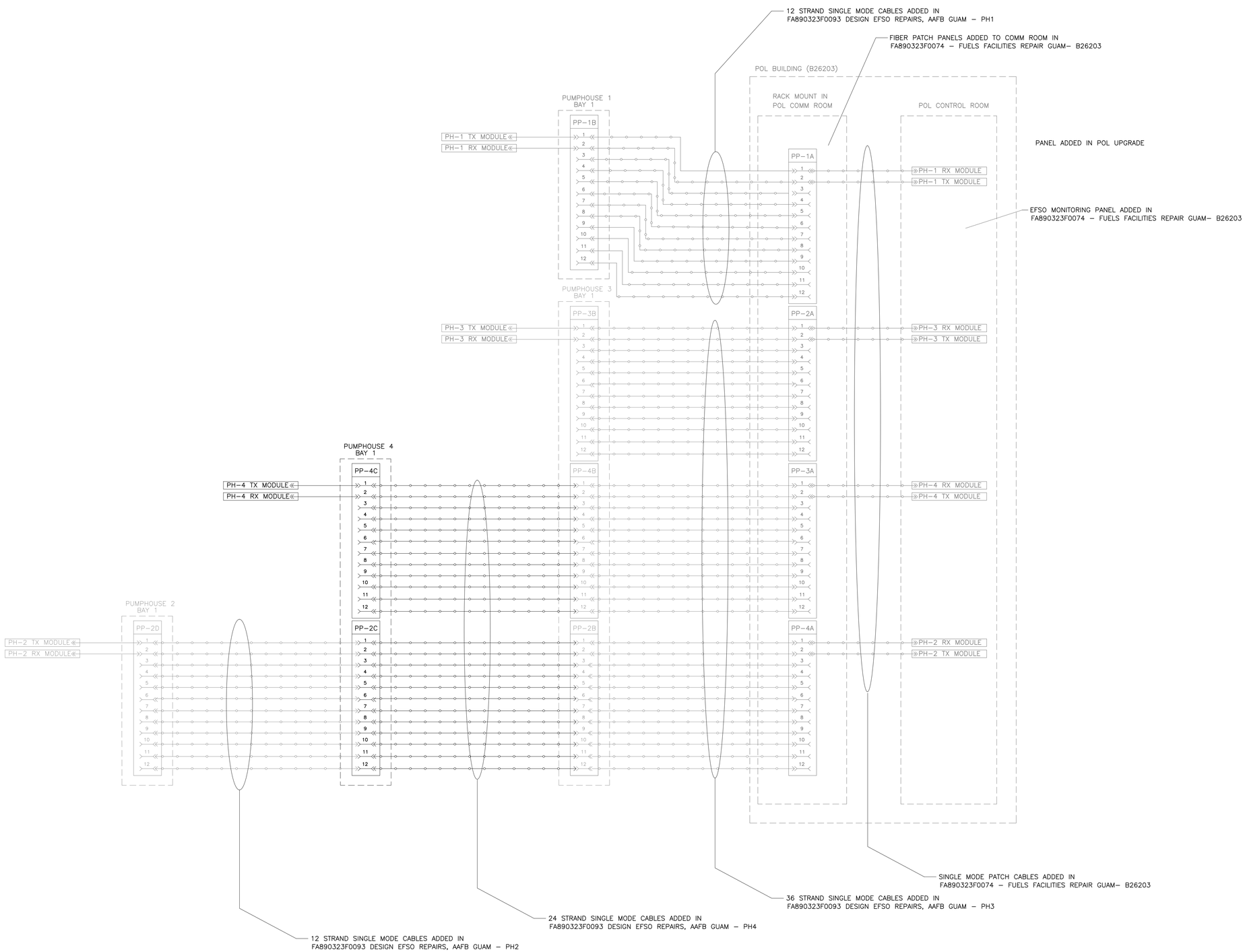

1 FIBER ROUTING OVERVIEW

GENERAL NOTES

1. THESE DRAWINGS SHALL BE READ IN CONJUNCTION WITH THE SPECIFICATION AND WITH SUCH OTHER WRITTEN INSTRUCTIONS AS MAY BE ISSUED DURING THE COURSE OF THE CONTRACT.
2. THIS DRAWING PROVIDES AN OVERVIEW OF THE FIBER TO BE INSTALLED DURING MULTIPLE PROJECTS TO PROVIDE MONITORING OF EFSO STATUS FOR ALL PUMP HOUSES AT B26203.

KEYED NOTE

1. T.B.D..

THIS DOCUMENT IS RELEASED FOR THE PURPOSE OF 35% DESIGN REVIEW UNDER THE AUTHORITY OF XXXXX X. XXXXX, TX LICENSE #XXXXX ON 09/20/23. IT IS NOT FOR CONSTRUCTION.

35% DESIGN

NOT FOR CONSTRUCTION

PROJECT INFORMATION

DESIGN EFSO REPAIRS AT VARIOUS FUELS FACILITIES - DESIGN EFSO REPAIRS TO HS-4 (Hydrant System #4)

ANDERSEN AIR FORCE BASE, GUAM

REVISIONS

MARK	DATE	DESCRIPTION

MANAGEMENT INFORMATION

ISSUE DATE: 09/20/2023
DESIGN GROUP: HDR
DESIGNED BY: S. HORRAS
DRAWN BY: S. HORRAS
CHECKED BY: TBD
DESIGN FILE LOCATION: 10374683

SHEET TITLE

EFSO FIBER NETWORK OVERVIEW

SHEET NUMBER

Y-102

SHEET - OF OVERVIEW

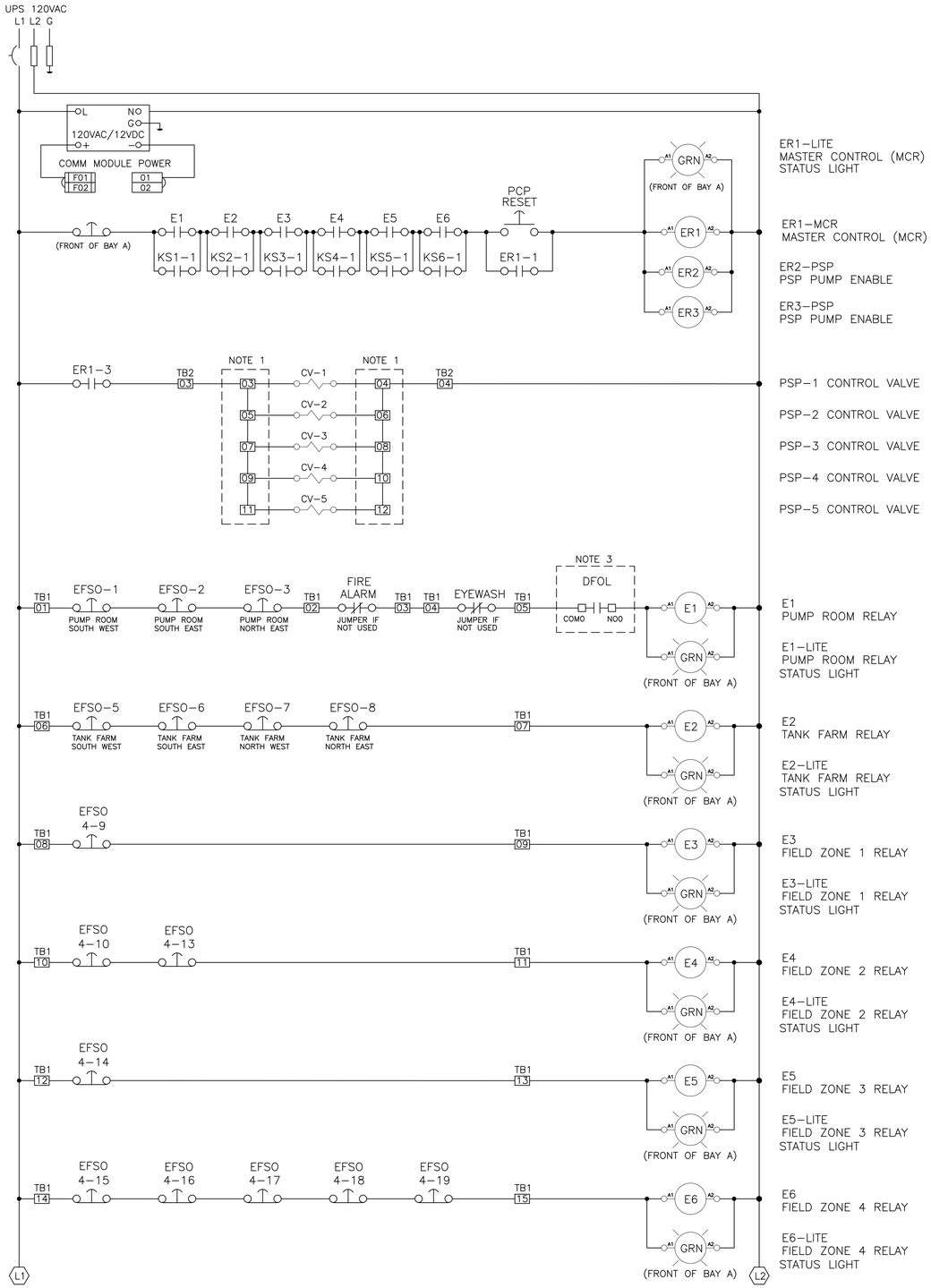

1 EFSO WIRING

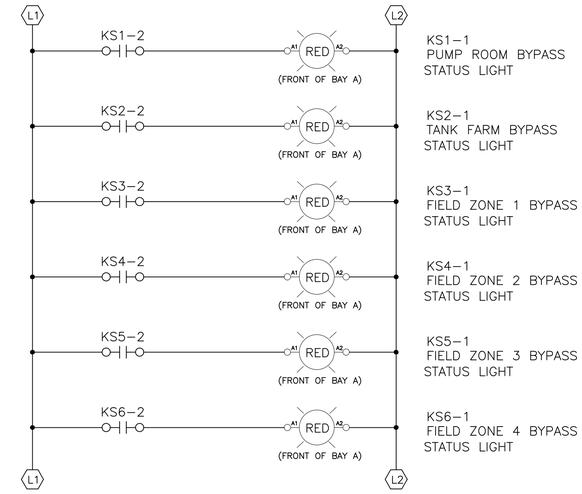

2 BYPASS STATUS LIGHT WIRING

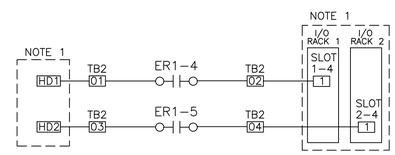

3 PSP CONTROL PLC – EFSO MONITORING

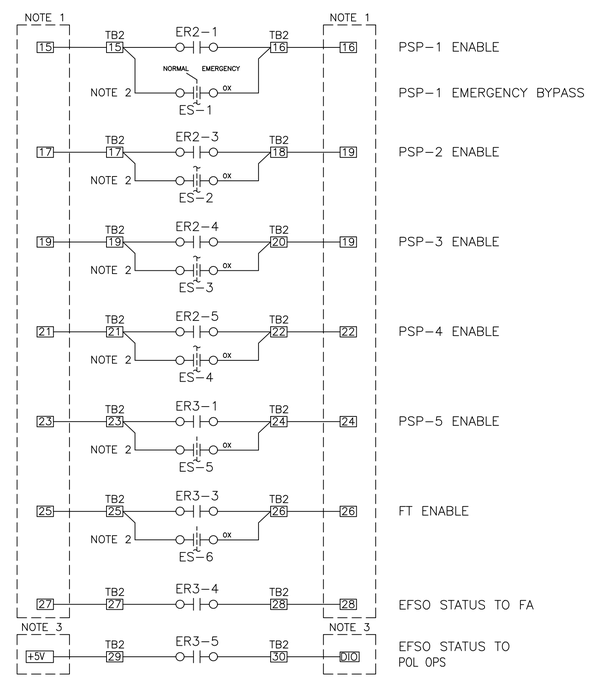

4 PUMP ENABLE WIRING

GENERAL NOTES

1. THESE DRAWINGS SHALL BE READ IN CONJUNCTION WITH THE SPECIFICATION AND WITH SUCH OTHER WRITTEN INSTRUCTIONS AS MAY BE ISSUED DURING THE COURSE OF THE CONTRACT.

KEYED NOTE

1. EXISTING TERMINALS IN BAY C.
2. EMERGENCY BYPASS SWITCH ALLOWS FOR PUMP TO RUN WITHOUT ER1 ENABLED. LOCATE SWITCH INSIDE BAY A WITH LIMTED ACCESS KEYSWITCH.
3. DIGITAL FIBER OPTIC LINK (DFOL)

THIS DOCUMENT IS RELEASED FOR THE PURPOSE OF 35% DESIGN REVIEW UNDER THE AUTHORITY OF STEPHEN E HORRAS, TX LICENSE #118913 ON 09/20/23. IT IS NOT FOR CONSTRUCTION.

35% DESIGN

NOT FOR CONSTRUCTION

PROJECT INFORMATION

DESIGN EFSO REPAIRS AT VARIOUS FUELS FACILITIES - DESIGN EFSO REPAIRS TO HS-4 (Hydrant System #4)

ANDERSEN AIR FORCE BASE, GUAM

REVISIONS

MARK	DATE	DESCRIPTION

MANAGEMENT INFORMATION

ISSUE DATE: 09/20/2023
DESIGN GROUP: HDR
DESIGNED BY: S. HORRAS
DRAWN BY: S. HORRAS
CHECKED BY: T.B.D.
DESIGN FILE LOCATION: 10374683

SHEET TITLE

EFSO PUMP HOUSE WIRING LAYOUT

SHEET NUMBER

Y-103

SHEET - OF -

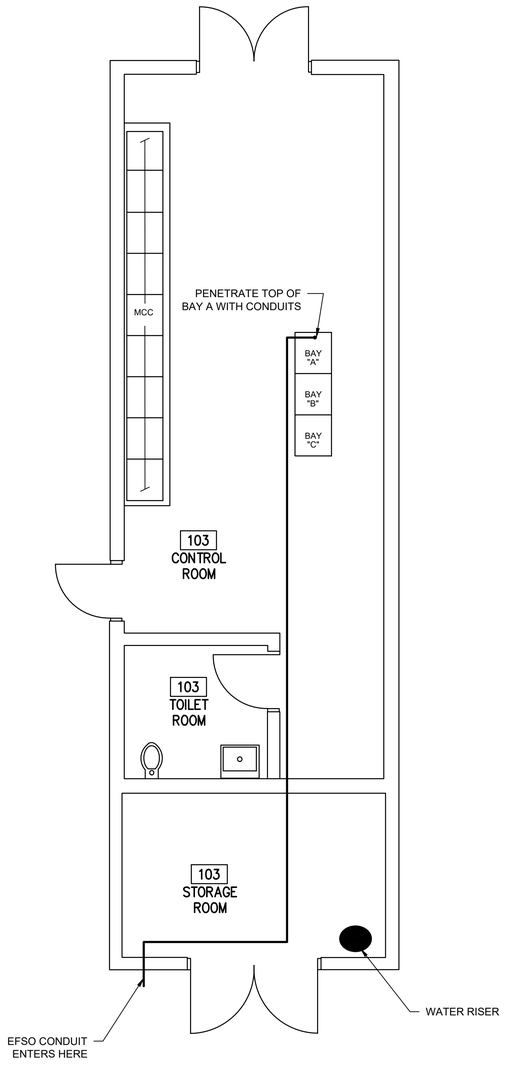

1 Y-204 PUMP STATION PH-4 I&C PLAN

SCALE: 1 : 50

Pump House

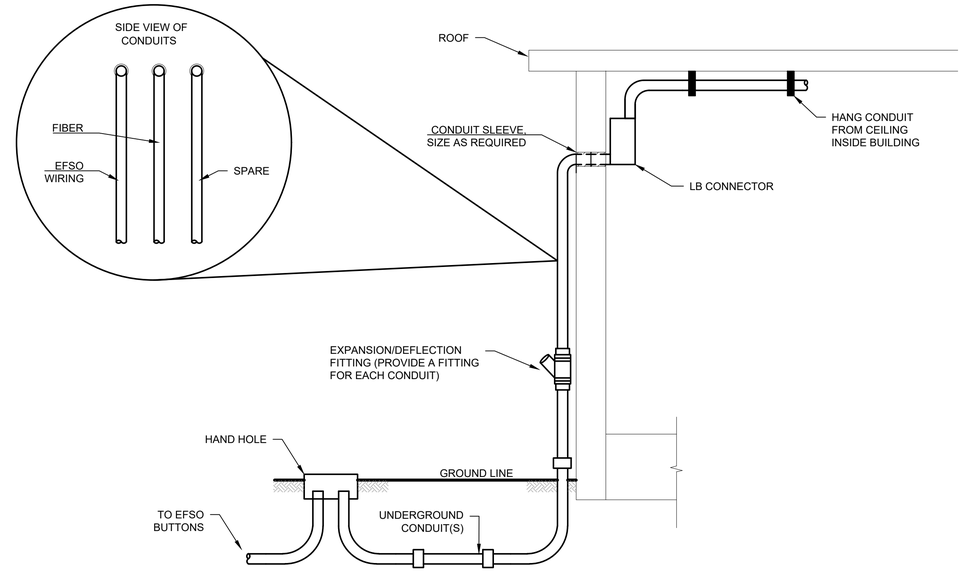

2 10374683-04Y-104 UNDERGROUND CONDUIT BUILDING ENTRY DETAIL

NOT TO SCALE

THIS DOCUMENT IS RELEASED FOR THE PURPOSE OF 35% DESIGN REVIEW UNDER THE AUTHORITY OF STEPHEN E HORRAS TX LICENSE #118913 ON 09/20/23. IT IS NOT FOR CONSTRUCTION.

35% DESIGN

NOT FOR CONSTRUCTION

PROJECT INFORMATION

DESIGN EFSO REPAIRS AT VARIOUS FUELS FACILITIES - DESIGN EFSO REPAIRS TO HS-4 (Hydrant System #4)

ANDERSEN AIR FORCE BASE, GUAM

REVISIONS

MARK	DATE	DESCRIPTION

MANAGEMENT INFORMATION

ISSUE DATE: 09/20/2023
DESIGN GROUP: HDR
DESIGNED BY: S. HORRAS
DRAWN BY: S. HORRAS
CHECKED BY: T.B.D.
DESIGN FILE LOCATION: 10374683

SHEET TITLE

PUMP HOUSE I&C PLAN AND DETAILS

SHEET NUMBER

Y-104

SHEET - OF -

LEGENDS, SYMBOLS AND ABBREVIATIONS

X 20A 3P OR X 100AF 80AT 3P LSIGA

LOW – VOLTAGE CIRCUIT BREAKER (CB). RATING AND NO. OF POLES AS SHOWN. WHEN SPECIFIC TYPE, OTHER THAN MCCB, IS REQUIRED, X INDICATES TYPE.

TYPES:
- MCCB – MOLDED CASE
- ICCB – INSULATED CASE
- LVP – LOW VOLTAGE POWER
- MCP – MOTOR CIRCUIT PROTECTOR (RATING PER CONNECTED LOAD)

TRIP UNIT:
- L – LONG TIME PICKUP
- S – SHORT TIME PICKUP
- I – INSTANTANEOUS PICKUP
- G – GROUND FAULT PICKUP
- A – ARC FLASH MAINTENANCE

GFP — GROUND FAULT PROTECTION

52 — MEDIUM – VOLTAGE CIRCUIT BREAKER

FUSE, SIZE, AND NUMBER OF FUSES AS NOTED

FUSED CUTOUT, CURRENT RATING, FUSE SIZE, AND NUMBER OF POLES AS NOTED

FUSIBLE SWITCH, CURRENT RATING, FUSE SIZE, AND QUANTITY AS NOTED

NON–FUSED SWITCH, CURRENT RATING, AND NUMBER OF POLES AS NOTED

DISCONNECT OR DRAWOUT CONNECTION

A B & A B — MAGNETIC MOTOR STARTER AND SEPARATELY MOUNTED COMBINATION MAGNETIC MOTOR STARTER

D C & D C — MOTOR CONTROLLER AND SEPARATELY MOUNTED MOTOR CONTROLLER WITH SHORT CIRCUIT PROTECTION AND DISCONNECT

MOTOR STARTER AND CONTROLLER SUBSCRIPTS:

A – MAGNETIC STARTER NEMA SIZE

B – STARTER TYPE
- NONE – FULL VOLTAGE NON–REVERSING (FVNR)
- FVR – FULL VOLTAGE REVERSING
- 2S – TWO SPEED
- RVAT – REDUCED VOLTAGE AUTO TRANSFORMER

C – CONTROL DIAGRAM OR CONTROLS SCHEDULE NUMBER (IF REQUIRED)

D – CONTROLLER TYPE
- VFD – VARIABLE FREQUENCY DRIVE
- SS – SOLID STATE
- CONT – CONTACTOR

SEPARATELY MOUNTED COMBINATION MOTOR STARTER OR CONTROLLER; SEE ELECTRICAL ONE – LINE DIAGRAM OR SCHEDULE FOR DESCRIPTION

SEPERATELY MOUNTED MOTOR STARTER OR CONTROLLER; SEE ELECTRICAL ONE–LINE DIAGRAM OR SCHEDULE FOR DESCRIPTION.

DISCONNECT OR SAFETY SWITCH, 30A, 3P, NON–FUSED UNLESS OTHERWISE NOTED

X Y — FUSED DISCONNECT OR SAFETY SWITCH, 3P, X INDICATES AMP RATING GREATER THAN 30A, Y INDICATES FUSE SIZE

CB — SEPARATELY MOUNTED CIRCUIT BREAKER; SEE ELECTRICAL ONE – LINE DIAGRAM OR SCHEDULE FOR DESCRIPTION

7 1/2 OR HP — MOTOR WITH DESIGN HORSEPOWER (WHEN INDICATED)

G — GENERATOR

ATS — TRANSFER SWITCH, CURRENT RATING, AND NUMBER OF POLES AS NOTED

ATS – AUTOMATIC
MTS – MANUAL

TRANSFORMER
- 3–PHASE, 3–WIRE DELTA CONNECTION
- 3–PHASE, 4–WIRE GROUNDED WYE CONNECTION

LP100 208/120V 3Ø, 4W — SWITCHBOARD OR PANELBOARD; NAME, VOLTAGE, PHASE, NUMBER OF WIRES WHEN INDICATED

100 KVA — NON–MOTOR LOAD WITH DESIGN KVA, KW, OR AMP

VOLTAGE TRANSFORMER (VT OR PT)

CURRENT TRANSFORMER (CT)

WH — UTILITY WATT–HOUR METER PER UTILITY REQUIREMENTS

DMP — DIGITAL METERING PACKAGE

GROUND

LIGHTNING ARRESTER

SPD — LOW VOLTAGE SURGE PROTECTIVE DEVICE

SS — SELECTOR SWITCH

PB — PUSHBUTTON

IC — INSTRUMENTATION/CONTROL DEVICE

CONTROL PANEL INTEGRAL OR PROVIDED WITH ASSOCIATED EQUIPMENT

CONTROL PANEL WITH DISCONNECT SWITCH INTEGRAL OR PROVIDED WITH ASSOCIATED EQUIPMENT

J — JUNCTION OR PULL BOX

PANELBOARD (250V TO 600V)

PANELBOARD (LESS THAN 250V)

X — ELECTRICAL EQUIPMENT ENCLOSURE: SWITCHBOARD, MOTOR CONTROL CENTER, CONTROL PANEL, TRANSFORMER OR OTHER EQUIPMENT AS INDICATED. ESTIMATED SIZE AS INDICATED. WHEN USED X INDICATES EQUIPMENT TYPE.

EQUIPMENT TYPES:
- ATS – AUTOMATIC TRANSFER SWITCH
- CP – CONTROL PANEL
- MTS – MANUAL TRANSFER SWITCH
- MCC – MOTOR CONTROL CENTER
- UPS – UNINTERUPTABLE POWER SUPPLY
- VFD – VARIABLE FREQUENCY DRIVE
- SB – SWITCHBOARD
- SG – SWITCHGEAR
- T – TRANSFORMER

Z X Y — CEILING/PENDANT–MOUNTED LUMINAIRE – HID, COMPACT FLUORESCENT, OR INCANDESCENT

Z X Y — CEILING/PENDENT MOUNTED LUMINAIRE – HID, COMPACT FLOURESCENT, OR INCANDESANT – EMERGENCY

Z X Y — WALL–MOUNTED LUMINAIRE – HID, COMPACT FLUORESCENT, OR INCANDESCENT

Z X Y — WALL–MOUNTED LUMINAIRE – HID, COMPACT FLUORESCENT, OR INCANDESCENT – EMERGENCY

Z X Y — WALL–MOUNTED FLOOD – HID, COMPACT FLOURESCENT OR INCANDESENT

Z X Y — POLE/STANCHION MOUNTED LUMINAIRE – HID, COMPACT FLOURESCENT OR INCANDESCENT

Z X Y — POLE/STANCHION MOUNTED LUMINAIRE – HID, COMPACT FLOURESCENT OR INCANDESCENT – EMERGENCY

Z X Y — POLE/STANCHION MOUNTED FLOOD – HID, COMPACT FLOURESCENT OR INCANDESCENT

Z X Y — CEILING/PENDANT–MOUNTED FLUORESCENT LUMINAIRE

Z X Y — WALL–MOUNTED FLUORESCENT LUMINAIRE

Z X Y — CEILING/PENDANT–MOUNTED FLUORESCENT NORMAL/EMERGENCY LUMINAIRE

Z X Y — WALL–MOUNTED FLUORESCENT NORMAL/EMERGENCY LUMINAIRE

X Y — EMERGENCY LIGHT, 2 ATTACHED HEADS AS SHOWN

X Y — EMERGENCY LIGHT, REMOTE MOUNTED HEAD

X Y X Y — DOUBLE–FACED CEILING OR WALL–MOUNTED EXIT LIGHT; DIRECTIONAL ARROWS (IF REQUIRED) AS INDICATED ON PLANS

X Y X Y — SINGLE–FACED CEILING OR WALL–MOUNTED EXIT LIGHT; DIRECTIONAL ARROWS (IF REQUIRED) AS INDICATED ON PLANS

LIGHTING FIXTURE SUBSCRIPTS:
- X – INDICATES FIXTURE TYPE PER LIGHTING FIXTURE SCHEDULE
- Y – INDICATES CIRCUIT NUMBER FROM PANELBOARD
- Z – INDICATES CONTROLLING SWITCH (IF REQUIRED)
- NL – NIGHT LIGHT UNSWITCHED

$ X Y — TOGGLE SWITCH

SUBSCRIPTS:

X – INDICATES TYPE
- NONE – SINGLE POLE
- 2 – DOUBLE POLE
- 3 – THREE–WAY
- 4 – FOUR–WAY
- HP – TOGGLE SWITCH, HORSEPOWER RATED
- K – KEY SWITCH
- TE – MANUAL MOTOR STARTER WITH THERMAL ELEMENT
- P – PILOT LIGHT
- L – LIGHTED HANDLE
- DM – DIMMING
- FT – FUSETRON
- MC – MOMENTARY CONTACT
- T – TIMER

Y – INDICATES CONTROLLING SWITCH (IF REQUIRED)

PC — PHOTOCELL

TC — TIME CLOCK

OSX — LIGHTING CONTROL OCCUPANCY SENSOR, WALL MOUNTED, X INDICATES TYPE PER SCHEDULE.

OSX — LIGHTING CONTROL OCCUPANCY SENSOR, CEILING MOUNTED, X INDICATES TYPE PER SCHEDULE.

SPECIAL–PURPOSE RECEPTACLE AS DEFINED ON PLANS

PLUG–IN RECEPTACLE STRIP, QUANTITY AND SPACING OF RECEPTACLES AS NOTED OR SPECIFIED

X Y — QUAD–DUPLEX RECEPTACLE, TWO NEMA 5–20R UNDER COMMON COVER PLATE

X Y — DUPLEX RECEPTACLE, NEMA 5–20R

X Y — SIMPLEX RECEPTACLE, NEMA 5–20R

X Y — RECESSED FLOOR MOUNTED BOX, QUANTITY OF NEMA 5–20R RECEPTACLES AS INDICATED

SUBSCRIPTS:
- X – INDICATES TYPE
  - GFCI – GROUND FAULT CIRCUIT INTERRUPTER
- Y – INDICATES CIRCUIT NUMBER FROM PANELBOARD

CONDUIT TURNING UP

CONDUIT TURNING DOWN

HOME RUN TO PANEL, 2 #12, 1 #12G IN 3/4"C UNLESS OTHERWISE NOTED

CIRCUIT RUN BETWEEN DEVICES EXPOSED IN NON–ARCHITECTURALLY FINISHED AREAS; CONCEALED IN ARCHITECTURALLY FINISHED AREAS. CONDUIT AND CONDUCTOR SIZES SHALL BE THE SAME AS THE HOMERUN FOR THE CIRCUIT.

CONDUIT RUN BETWEEN DEVICES CONCEALED IN NON–ARCHITECTURALLY FINISHED AREAS OR UNDER FLOOR SLAB. CONDUIT AND CONDUCTOR SIZES SHALL BE THE SAME AS THE HOMERUN FOR THE CIRCUIT.

CIRCUIT HASH MARKS (WHEN INDICATED); LONG, SHORT, SINGLE DOT, AND DOUBLE DOT REPRESENT PHASE, NEUTRAL, EQUIPMENT GROUND, AND ISOLATED EQUIPMENT GROUND, RESPECTIVELY. #12 IN 3/4" CONDUIT UNLESS OTHERWISE INDICATED.

CIRCUIT CONTINUATION

CONDUIT STUBBED OUT AND CAPPED

CORD AND PLUG CONNECTION

XXX OR XXX — CONDUIT TAG OR CIRCUIT NUMBER – WIRE AND CONDUIT SIZE AS SPECIFIED IN CIRCUIT SCHEDULE ON THE SHEETS

G G — GROUND CABLE

GROUND ROD

E E — ELECTRIC LINE

E E — CONCRETE ENCASED UNDERGROUND DUCTBANK

EE EE — DIRECT BURIED CONDUIT

HH — HAND HOLE

GENERAL NOTES:

1. THIS IS A STANDARD ELECTRICAL SYMBOLOGY SHEET. NOT ALL SYMBOLS MAY BE USED ON THIS PROJECT.
2. SCREENING OR SHADING OF WORK IS USED TO INDICATE EXISTING COMPONENTS OR TO DE–EMPHASIZE PROPOSED IMPROVEMENTS TO HIGHLIGHT SELECTED TRADE WORK. REFER TO CONTEXT OF EACH SHEET FOR USAGE.
3. SEE P&ID LEGEND SHEET FOR PROJECT–SPECIFIC EQUIPMENT SYMBOLS, EQUIPMENT ABBREVIATIONS, AND PIPING SYSTEM ABBREVIATIONS.

35% DESIGN

NOT FOR CONSTRUCTION

PROJECT INFORMATION

DESIGN EFSO REPAIRS AT VARIOUS FUELS FACILITIES - DESIGN EFSO REPAIRS TO HS-4 (Hydrant System #4)

ANDERSEN AIR FORCE BASE, GUAM

REVISIONS

MARK	DATE	DESCRIPTION

MANAGEMENT INFORMATION

ISSUE DATE: 09/08/2023
DESIGN GROUP: HDR
DESIGNED BY: KTL
DRAWN BY: DDD
CHECKED BY: PKD
DESIGN FILE LOCATION: 10374683

SHEET TITLE: LEGENDS SYMBOLS AND ABBREVIATIONS

SHEET NUMBER: E-001

SHEET - OF -

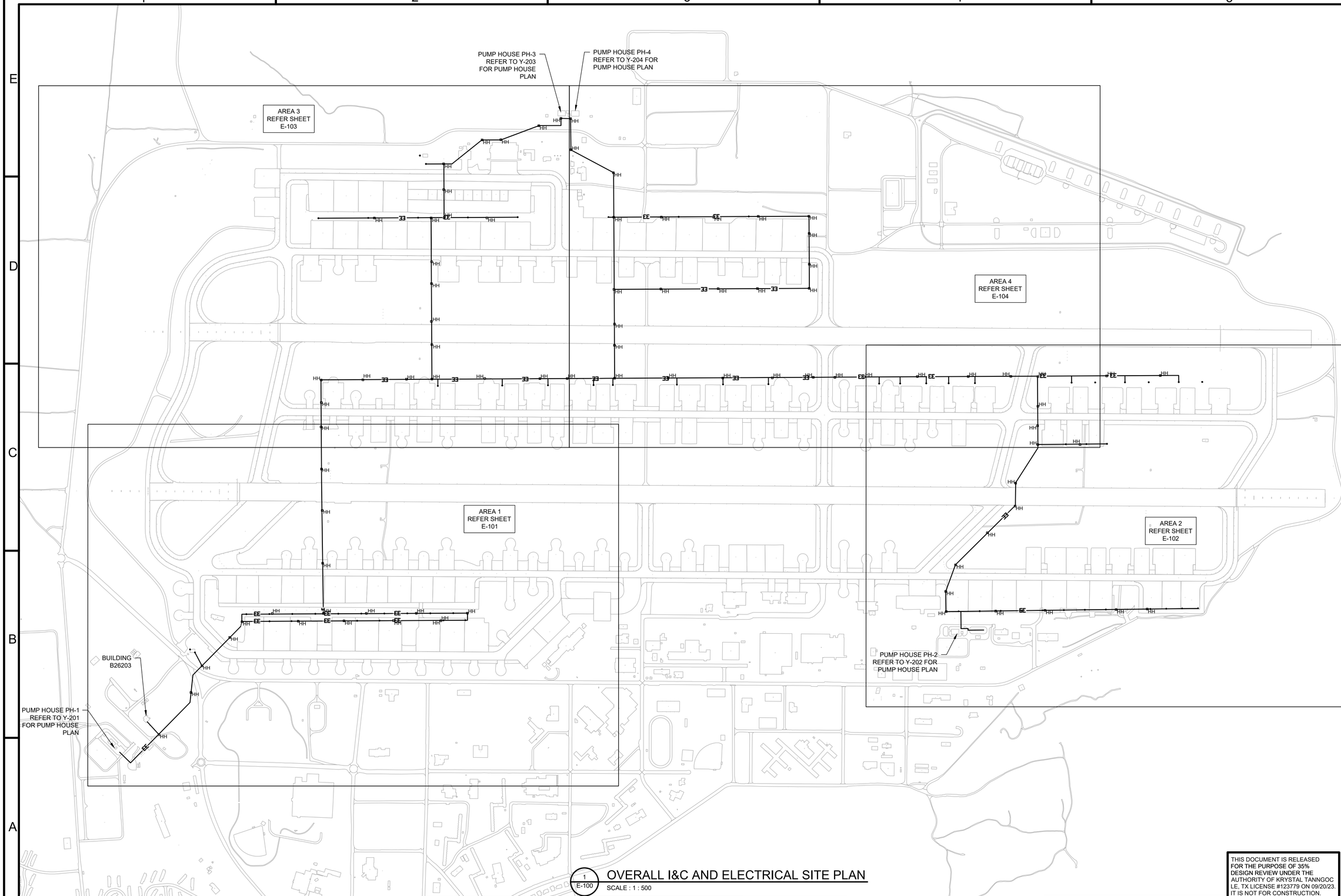

1 E-100 OVERALL I&C AND ELECTRICAL SITE PLAN

SCALE : 1 : 500

THIS DOCUMENT IS RELEASED FOR THE PURPOSE OF 35% DESIGN REVIEW UNDER THE AUTHORITY OF KRYSTAL TANNGOC LE, TX LICENSE #123779 ON 09/20/23. IT IS NOT FOR CONSTRUCTION.

35% DESIGN

NOT FOR CONSTRUCTION

PROJECT INFORMATION

DESIGN EFSO REPAIRS AT VARIOUS FUELS FACILITIES - DESIGN EFSO REPAIRS TO HS-4 (Hydrant System #4)

ANDERSEN AIR FORCE BASE, GUAM

REVISIONS

MARK	DATE	DESCRIPTION

MANAGEMENT INFORMATION

ISSUE DATE: 09/20/2023
DESIGN GROUP: HDR
DESIGNED BY: K. LE
DRAWN BY: D. DOSHI
CHECKED BY: P. DAVILA
DESIGN FILE LOCATION: 10374683

SHEET TITLE

OVERALL I&C AND ELECTRICAL SITE PLAN

SHEET NUMBER

E-101

SHEET - OF -

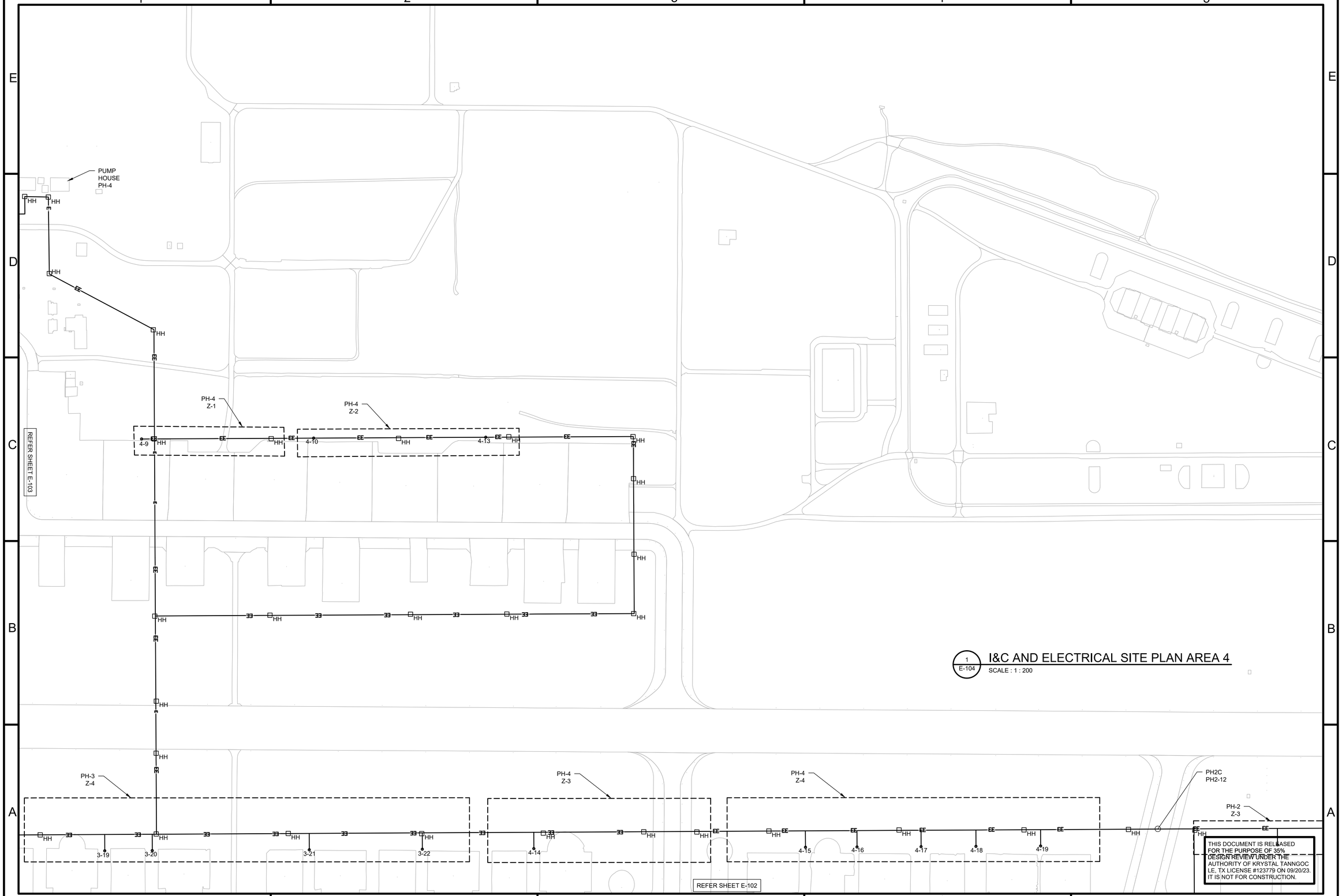

1 E-104 I&C AND ELECTRICAL SITE PLAN AREA 4

SCALE : 1 : 200

THIS DOCUMENT IS RELEASED FOR THE PURPOSE OF 35% DESIGN REVIEW UNDER THE AUTHORITY OF KRYSTAL TANNGOC LE, TX LICENSE #123779 ON 09/20/23. IT IS NOT FOR CONSTRUCTION.

35% DESIGN

NOT FOR CONSTRUCTION

PROJECT INFORMATION

DESIGN EFSO REPAIRS AT VARIOUS FUELS FACILITIES - DESIGN EFSO REPAIRS TO HS-4 (Hydrant System #4)

ANDERSEN AIR FORCE BASE, GUAM

REVISIONS

MARK	DATE	DESCRIPTION

MANAGEMENT INFORMATION

ISSUE DATE: 09/20/2023
DESIGN GROUP: HDR
DESIGNED BY: K. LE
DRAWN BY: D. DOSHI
CHECKED BY: P. DAVILA
DESIGN FILE LOCATION: 10374683

SHEET TITLE

I&C AND ELECTRICAL SITE PLAN AREA 4

SHEET NUMBER

E-201

SHEET - OF -

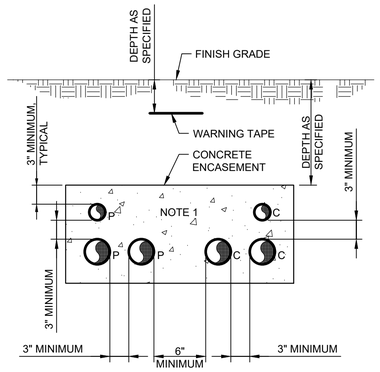

NOTES:

1. NUMBER OF CONDUITS AS REQUIRED FOR THE APPLICATION. REFER TO CIVIL AND SITE DRAWINGS FOR ADDITIONAL INFORMATION.
2. 'P' SUBSCRIPT ELECTRICAL POWER OR CONTROL CONDUIT.
3. C SUBSCRIPT COMMUNICATION (TELEPHONE, DATA, INSTRUMENTATION) CONDUIT.

1 / E-001 TYPICAL CONCRETE-ENCASED DUCT BANK SECTION

NOT TO SCALE

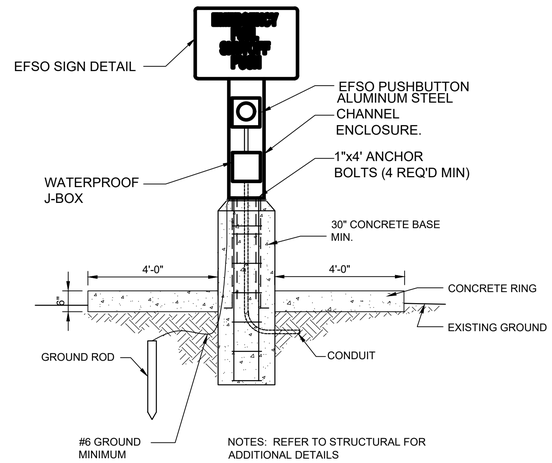

2 / E-001 EFSO STATION DETAIL

NOT TO SCALE

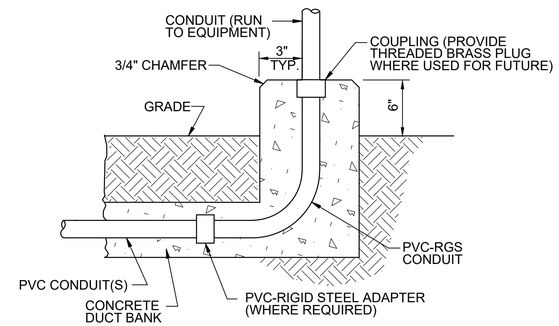

3 / E-001 CONDUIT STUB-UP CURB (EXT. AREA)

NOT TO SCALE

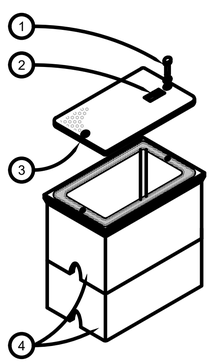

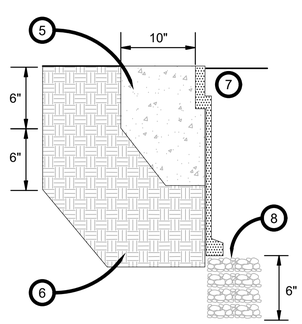

KEYED NOTES:

1. STAINLESS STEEL HEX BOLT AND WASHER
2. PULL SLOT
3. SKID RESISTENT SURFACE
4. SECTIONAL BOX WHEN REQUIRED
5. CONCRETE RING AROUND BOX
6. COMPACTED EARTH
7. BOX AND COVER
8. CRUSHED ROCK

NOTES:

A. HOUSING SHALL BE A POLYMER CONCRETE REINFORCED WITH A HEAVY WEAVE.
B. FIBERGLASS REINFORCING WITH COMPRESSIVE STRENGTH OF NO LESS THAN 10,000 psi.
C. COVER AND BOX SHALL WITHSTAND A SERVICE LOAD OF NO LESS THAN 15,000 LBS.
D. HANDHOLE LIDS IN AREA IN ROADWAYS OR WITHIN 10 FEET OF ROADWAYS SHALL BE DESIGNED TO WITHSTAND H-20 LOADING.
E. PROVIDE STAINLESS STEEL BOLTS AND INSERTS.
F. PROVIDE WITH (2) 2 1/2" MOUSEHOLES.
G. PROVIDE LABEL "ELECTRICAL" ON COVER.
H. SIZE AS REQUIRED BY NEC. PROVIDE ADDITIONAL SPACE TO PROVIDE SEPARATION BETWEEN POWER AND COMMUNICATION WIRING.

4 / E-001 HAND HOLE DETAIL

NOT TO SCALE

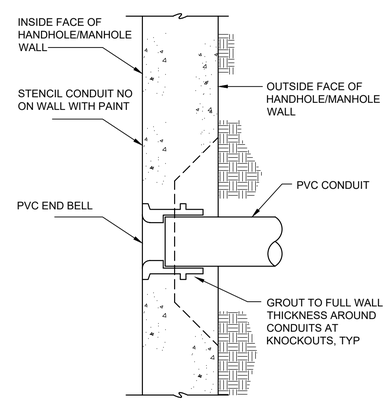

5 / E-001 CONDUIT HAND HOLE/ MANHOLE ENTRANCE

NOT TO SCALE

35% DESIGN

NOT FOR CONSTRUCTION

PROJECT INFORMATION

DESIGN EFSO REPAIRS AT VARIOUS FUELS FACILITIES - DESIGN EFSO REPAIRS TO HS-4 (Hydrant System #4)

ANDERSEN AIR FORCE BASE, GUAM

REVISIONS

MARK	DATE	DESCRIPTION

MANAGEMENT INFORMATION

ISSUE DATE: 09/08/2023
DESIGN GROUP: HDR
DESIGNED BY: KTL
DRAWN BY: DDD
CHECKED BY: PKD
DESIGN FILE LOCATION: 10374683

SHEET TITLE

LEGENDS SYMBOLS AND ABBREVIATIONS

SHEET NUMBER

E-501

SHEET - OF -

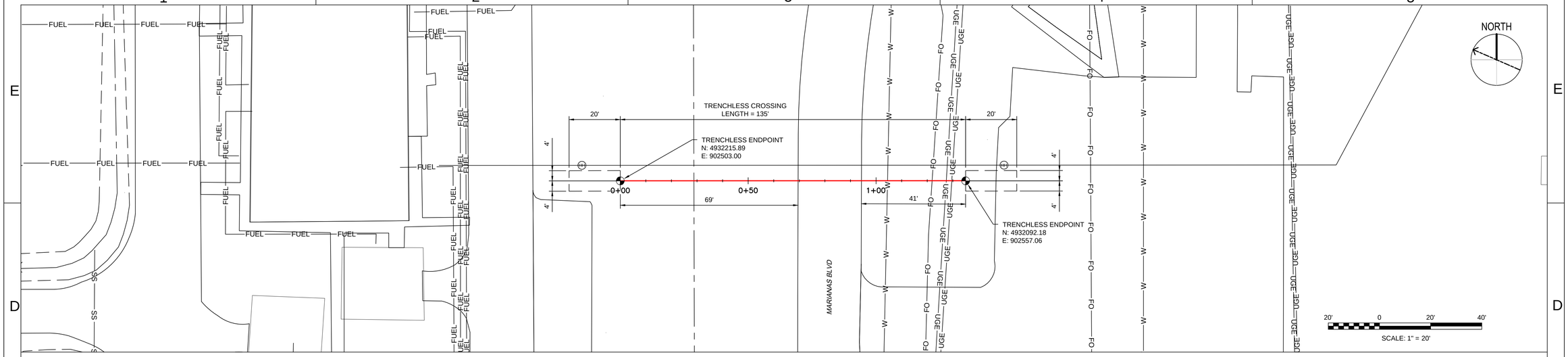

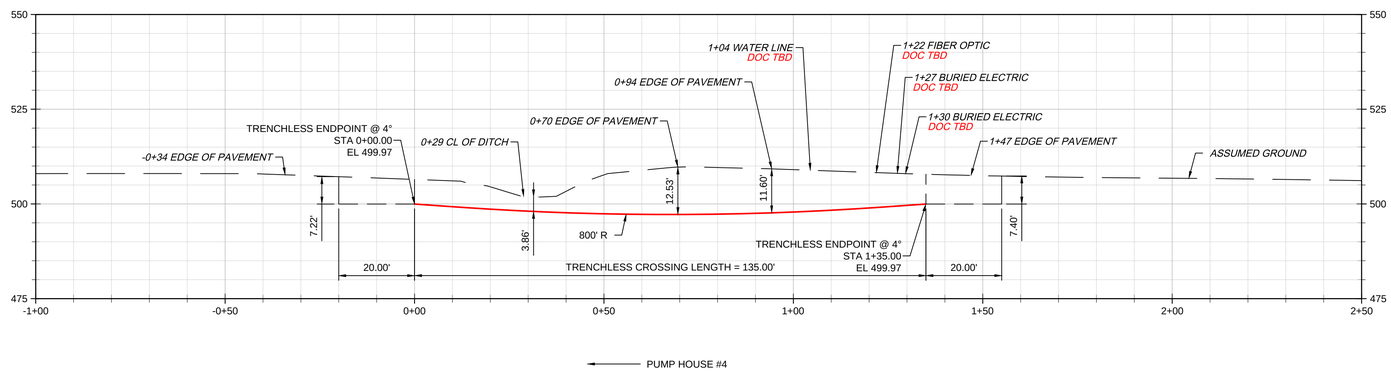

GENERAL NOTES

1. NORTHINGS AND EASTINGS ARE IN US SURVEY FEET REFERENCED TO XXXXXXXXXXXXXXXXXXXXXXXXX.
2. ELEVATIONS ARE IN US FEET, REFERENCED TO XXXXXX.
3. AERIAL IMAGERY PROVIDED BY XXXXXXXX.
4. TOPOGRAPHIC SURVEY PENDING.
5. BASE FILE(S) PROVIDED BY ANDERSON AIR FORCE BASE.
6. LOCATIONS AND ELEVATIONS OF EXISTING FACILITIES/UTILITIES WERE PROVIDED BY XXXX.
7. ESTABLISHED BORE PATH STATIONING IS IN FEET BY HORIZONTAL MEASUREMENT AND IS REFERENCED TO THE CONTROL POSITION FOR THE BORE.
8. ALL SPECIFICATIONS, PERMIT REQUIREMENTS AND CONTRACT DOCUMENTS SHALL BE ADHERED TO BY CONTRACTOR.
9. CONTRACTOR SHALL MAKE NOTIFICATION TO AAFB BEFORE CONSTRUCTION COMMENCES.
10. PRESENCE, LOCATION, AND ELEVATIONS (POTHOLE IF NEEDED) OF ALL UTILITIES/FACILITIES TO BE VERIFIED BY CONTRACTOR PRIOR TO CONSTRUCTION AND CLEARLY MARKED AND EXPOSED (IF NECESSARY).
11. CONTRACTOR TO ACTIVELY MONITOR THE AREA FOR IMPACTS THAT COULD OCCUR AS A RESULT OF TRENCHLESS OPERATIONS (E.G. SETTLEMENT, HEAVE, AND FLUID FLOW).
12. BORING PIT PLAN AND SECTION ARE CONCEPTUAL ONLY. CONTRACTOR SHALL PLAN FOR AND CONSTRUCT EXCAVATIONS APPROPRIATE FOR THE SITE CONDITIONS AND INSTALLATION. ALL EXCAVATIONS, INCLUDING ACCESS TO THEM, SHALL BE IN ACCORDANCE WITH OSHA, PERMIT AND REGULATORY REQUIREMENTS AND AAFB POLICY.
13. BLASTING IS NOT PERMITTED.
14. IF REQUIRED, CONTRACTOR SHALL PROVIDE AN APPROVED DEWATERING SYSTEM TO COMPLETE THE UTILITY INSTALLATION.
15. GEOTECHNICAL DATA PENDING.
16. UPON COMPLETION OF ANY TIE-INS TO THE CONNECTING CONDUITS, CONDUITS WITHIN THE BELL HOLE AREAS SHALL BE ADEQUATELY SUPPORTED VIA COMPACTED NATIVE MATERIAL AND/OR SANDBAGS UNTIL UNDISTURBED GROUND IS CONTACTED.
17. CONSTRUCTION ACTIVITIES NORMALLY WILL NOT BE PERMITTED WITHIN 30 METERS (100 FEET) OF THE RUNWAY/TAXIWAY EDGE. HOWEVER, CONSTRUCTION MAY BE PERMITTED WITHIN 30 METERS (100 FEET) OF THE RUNWAY/TAXIWAY EDGE ON A CASE-BY-CASE BASIS WITH A TEMPORARY WAIVER APPROVED BY THE INSTALLATION COMMANDER. (PER UFC 3-260-01 PAGE 525, PARAGRAPH B14-67.7.2 RUNWAY EDGES)
18. PER CONSTRUCTION SPECIFICATIONS, CONTRACTO TO DE-BEAD 12.750" OF HDPE CASING PIPE PRIOR TO INSTALLING CONDUITS.

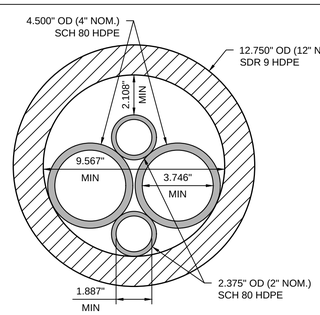

A TYPICAL
CASING / CONDUIT BUNDLE
CROSS SECTION

MATERIAL SPECIFICATIONS AND TOLERANCES	
ITEM	SPECIFICATIONS
CASING PIPE	(1) 12.750" OD (12" NOM.), SDR 9, HDPE
CONDUIT PIPE	(2) 4.500" OD (4" NOM.), SCH 80, HDPE (2) 2.375" OD (2" NOM.), SCH 80, HDPE
ITEM	TOLERANCE
PILOT HOLE ENTRY ANGLE	INCREASE ANGLE UP TO 0.5° (STEEPER). NO DECREASE IN ANGLE ALLOWED.
PILOT HOLE ENTRY LOCATION	AS PER COORDINATES PROVIDED BY COMPANY. NO CHANGES WITHOUT COMPANY APPROVAL.
PILOT HOLE EXIT ANGLE	INCREASE ANGLE UP TO 0.5° (STEEPER) OR DECREASE UP TO 1° (FLATTER).
PILOT HOLE EXIT LOCATION	UP TO 10 FEET BEYOND OR 5 FEET SHORT OF THE EXIT STAKE. BETWEEN 2.5 FEET LEFT AND 2.5 FEET RIGHT OF CENTERLINE.
PILOT HOLE DEPTH	UP TO 0 FEET ABOVE THE DESIGN DRILL PROFILE OR 5 FEET BELOW THE DESIGN DRILL PROFILE.
PILOT HOLE ALIGNMENT	SHALL REMAIN WITHIN 2.5 FEET LEFT OR RIGHT OF THE HDD CENTERLINE.
MINIMUM RADIUS OF CURVATURE	MINIMUM COMBINED (HORIZONTAL AND VERTICAL) RADIUS OF CURVATURE = "TBD" OVER EACH 3 JOINT SEGMENT

LEGEND

- PROPOSED TRENCHLESS CROSSING
- CONCEPTUAL BORE PIT
- TRENCHLESS ENDPOINT
- APPROX. HANDHOLE LOCATION

MOVE ALL PLAN AND PROFILE SHEETS AFTER SHEET 01C-115

THIS DOCUMENT IS RELEASED FOR THE PURPOSE OF 35% DESIGN REVIEW UNDER THE AUTHORITY OF RICHARD A. WHITE TX LICENSE #86423 ON 09/08/23. IT IS NOT FOR CONSTRUCTION.

PRELIMINARY - NOT FOR CONSTRUCTION OR RECORDING

35% DESIGN

NOT FOR CONSTRUCTION

PROJECT INFORMATION

DESIGN EFSO REPAIRS AT VARIOUS FUELS FACILITIES - DESIGN EFSO REPAIRS TO HS-4 (Hydrant System #4)

ANDERSEN AIR FORCE BASE, GUAM

REVISIONS

MARK	DATE	DESCRIPTION

MANAGEMENT INFORMATION

ISSUE DATE: 09/20/2023
DESIGN GROUP: HDR
DESIGNED BY: D.P. BEARDEN
DRAWN BY: J. EKSTROM
CHECKED BY: M. RHODES
DESIGN FILE LOCATION: 10374683

SHEET TITLE

12" TRENCHLESS CROSSING 4-1 PLAN AND PROFILE

SHEET NUMBER

01C-041

SHEET - OF -

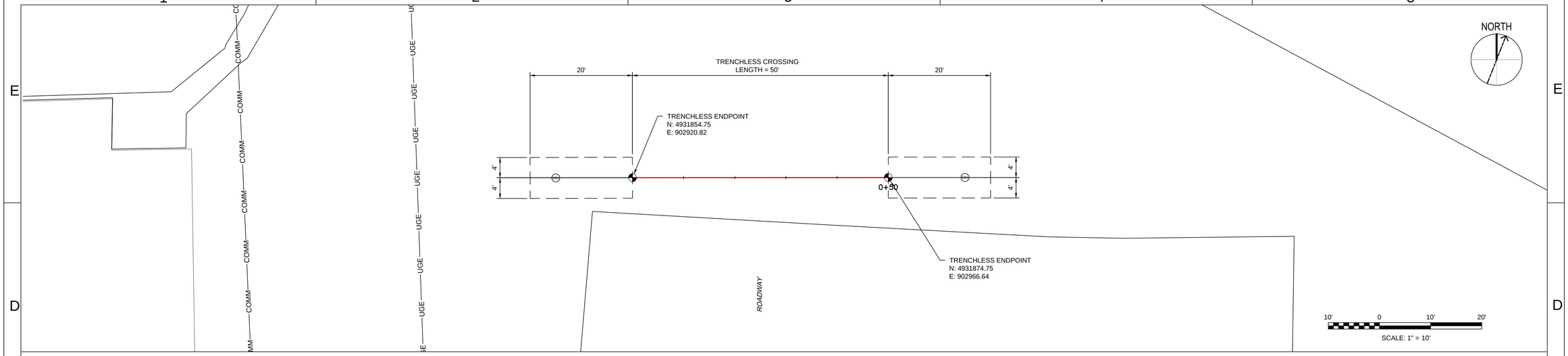

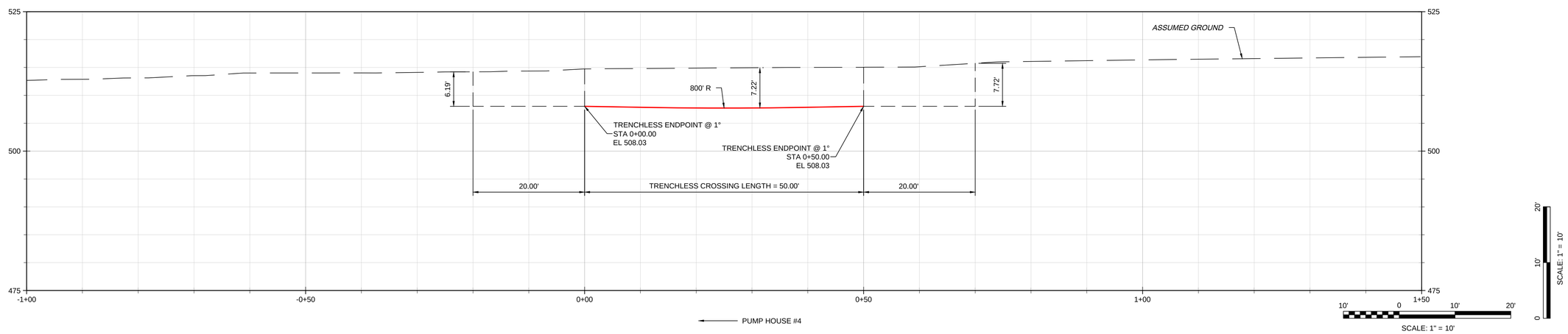

GENERAL NOTES

1. NORTHINGS AND EASTINGS ARE IN US SURVEY FEET REFERENCED TO XXXXXXXXXXXXXXXXXXXXXXXXXX.
2. ELEVATIONS ARE IN US FEET, REFERENCED TO XXXXXX.
3. AERIAL IMAGERY PROVIDED BY XXXXXXXX.
4. TOPOGRAPHIC SURVEY PENDING.
5. BASE FILE(S) PROVIDED BY ANDERSON AIR FORCE BASE.
6. LOCATIONS AND ELEVATIONS OF EXISTING FACILITIES/UTILITIES WERE PROVIDED BY XXXX.
7. ESTABLISHED BORE PATH STATIONING IS IN FEET BY HORIZONTAL MEASUREMENT AND IS REFERENCED TO THE CONTROL POSITION FOR THE BORE.
8. ALL SPECIFICATIONS, PERMIT REQUIREMENTS AND CONTRACT DOCUMENTS SHALL BE ADHERED TO BY CONTRACTOR.
9. CONTRACTOR SHALL MAKE NOTIFICATION TO AAFB BEFORE CONSTRUCTION COMMENCES.
10. PRESENCE, LOCATION, AND ELEVATIONS (POTHOLE IF NEEDED) OF ALL UTILITIES/FACILITIES TO BE VERIFIED BY CONTRACTOR PRIOR TO CONSTRUCTION AND CLEARLY MARKED AND EXPOSED (IF NECESSARY).
11. CONTRACTOR TO ACTIVELY MONITOR THE AREA FOR IMPACTS THAT COULD OCCUR AS A RESULT OF TRENCHLESS OPERATIONS (E.G. SETTLEMENT, HEAVE, AND FLUID FLOW).
12. BORING PIT PLAN AND SECTION ARE CONCEPTUAL ONLY. CONTRACTOR SHALL PLAN FOR AND CONSTRUCT EXCAVATIONS APPROPRIATE FOR THE SITE CONDITIONS AND INSTALLATION. ALL EXCAVATIONS, INCLUDING ACCESS TO THEM, SHALL BE IN ACCORDANCE WITH OSHA, PERMIT AND REGULATORY REQUIREMENTS AND AAFB POLICY.
13. BLASTING IS NOT PERMITTED.
14. IF REQUIRED, CONTRACTOR SHALL PROVIDE AN APPROVED DEWATERING SYSTEM TO COMPLETE THE UTILITY INSTALLATION.
15. GEOTECHNICAL DATA PENDING.
16. UPON COMPLETION OF ANY TIE-INS TO THE CONNECTING CONDUITS, CONDUITS WITHIN THE BELL HOLE AREAS SHALL BE ADEQUATELY SUPPORTED VIA COMPACTED NATIVE MATERIAL AND/OR SANDBAGS UNTIL UNDISTURBED GROUND IS CONTACTED.
17. CONSTRUCTION ACTIVITIES NORMALLY WILL NOT BE PERMITTED WITHIN 30 METERS (100 FEET) OF THE RUNWAY/TAXIWAY EDGE. HOWEVER, CONSTRUCTION MAY BE PERMITTED WITHIN 30 METERS (100 FEET) OF THE RUNWAY/TAXIWAY EDGE ON A CASE-BY-CASE BASIS WITH A TEMPORARY WAIVER APPROVED BY THE INSTALLATION COMMANDER. (PER UFC 3-260-01 PAGE 525, PARAGRAPH B14-67.7.2 RUNWAY EDGES)
18. PER CONSTRUCTION SPECIFICATIONS, CONTRACTO TO DE-BEAD 12.750" OF HDPE CASING PIPE PRIOR TO INSTALLING CONDUITS.

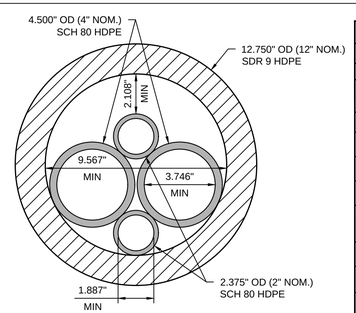

A TYPICAL
CASING / CONDUIT BUNDLE
CROSS SECTION

MATERIAL SPECIFICATIONS AND TOLERANCES	
ITEM	SPECIFICATIONS
CASING PIPE	(1) 12.750" OD (12" NOM.), SDR 9, HDPE
CONDUIT PIPE	(2) 4.500" OD (4" NOM.), SCH 80, HDPE (2) 2.375" OD (2" NOM.), SCH 80, HDPE
ITEM	TOLERANCE
PILOT HOLE ENTRY ANGLE	INCREASE ANGLE UP TO 0.5° (STEEPER). NO DECREASE IN ANGLE ALLOWED.
PILOT HOLE ENTRY LOCATION	AS PER COORDINATES PROVIDED BY COMPANY. NO CHANGES WITHOUT COMPANY APPROVAL.
PILOT HOLE EXIT ANGLE	INCREASE ANGLE UP TO 0.5° (STEEPER) OR DECREASE UP TO 1° (FLATTER).
PILOT HOLE EXIT LOCATION	UP TO 10 FEET BEYOND OR 5 FEET SHORT OF THE EXIT STAKE. BETWEEN 2.5 FEET LEFT AND 2.5 FEET RIGHT OF CENTERLINE.
PILOT HOLE DEPTH	UP TO 0 FEET ABOVE THE DESIGN DRILL PROFILE OR 5 FEET BELOW THE DESIGN DRILL PROFILE.
PILOT HOLE ALIGNMENT	SHALL REMAIN WITHIN 2.5 FEET LEFT OR RIGHT OF THE HDD CENTERLINE.
MINIMUM RADIUS OF CURVATURE	MINIMUM COMBINED (HORIZONTAL AND VERTICAL) RADIUS OF CURVATURE = "TBD" OVER EACH 3 JOINT SEGMENT

LEGEND

- PROPOSED TRENCHLESS CROSSING
- CONCEPTUAL BORE PIT
- TRENCHLESS ENDPOINT
- (HH) APPROX. HANDHOLE LOCATION

THIS DOCUMENT IS RELEASED FOR THE PURPOSE OF 35% DESIGN REVIEW UNDER THE AUTHORITY OF RICHARD A. WHITE TX LICENSE #86423 ON 09/08/23. IT IS NOT FOR CONSTRUCTION.

PRELIMINARY - NOT FOR CONSTRUCTION OR RECORDING

35% DESIGN

NOT FOR CONSTRUCTION

PROJECT INFORMATION

DESIGN EFSO REPAIRS AT VARIOUS FUELS FACILITIES - DESIGN EFSO REPAIRS TO HS-4 (Hydrant System #4)

ANDERSEN AIR FORCE BASE, GUAM

REVISIONS

MARK	DATE	DESCRIPTION

MANAGEMENT INFORMATION

ISSUE DATE: 09/20/2023
DESIGN GROUP: HDR
DESIGNED BY: D.P. BEARDEN
DRAWN BY: J. EKSTROM
CHECKED BY: M. RHODES
DESIGN FILE LOCATION: 10374683

SHEET TITLE

12" TRENCHLESS CROSSING 4-2 PLAN AND PROFILE

SHEET NUMBER

01C-042

SHEET - OF -

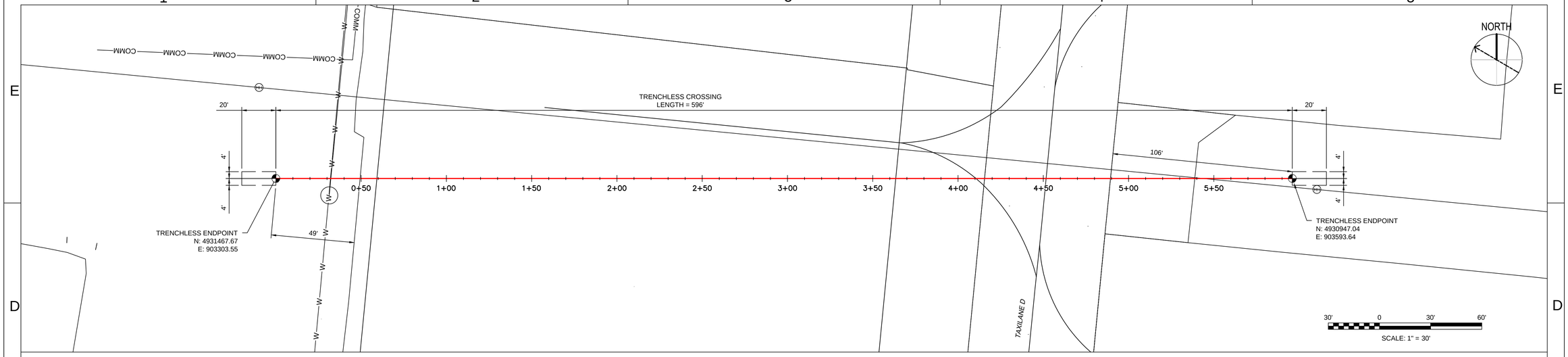

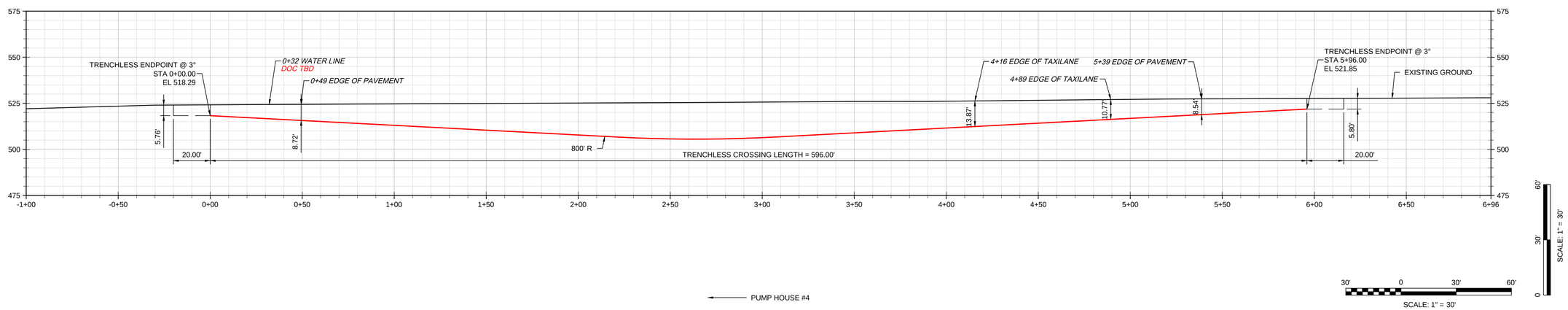

GENERAL NOTES

1. NORTHINGS AND EASTINGS ARE IN US SURVEY FEET REFERENCED TO XXXXXXXXXXXXXXXXXXXXXXXXX.
2. ELEVATIONS ARE IN US FEET, REFERENCED TO XXXXXX.
3. AERIAL IMAGERY PROVIDED BY XXXXXXXX.
4. TOPOGRAPHIC SURVEY PENDING.
5. BASE FILE(S) PROVIDED BY ANDERSON AIR FORCE BASE.
6. LOCATIONS AND ELEVATIONS OF EXISTING FACILITIES/UTILITIES WERE PROVIDED BY XXXX.
7. ESTABLISHED BORE PATH STATIONING IS IN FEET BY HORIZONTAL MEASUREMENT AND IS REFERENCED TO THE CONTROL POSITION FOR THE BORE.
8. ALL SPECIFICATIONS, PERMIT REQUIREMENTS AND CONTRACT DOCUMENTS SHALL BE ADHERED TO BY CONTRACTOR.
9. CONTRACTOR SHALL MAKE NOTIFICATION TO AAFB BEFORE CONSTRUCTION COMMENCES.
10. PRESENCE, LOCATION, AND ELEVATIONS (POTHOLE IF NEEDED) OF ALL UTILITIES/FACILITIES TO BE VERIFIED BY CONTRACTOR PRIOR TO CONSTRUCTION AND CLEARLY MARKED AND EXPOSED (IF NECESSARY).
11. CONTRACTOR TO ACTIVELY MONITOR THE AREA FOR IMPACTS THAT COULD OCCUR AS A RESULT OF TRENCHLESS OPERATIONS (E.G. SETTLEMENT, HEAVE, AND FLUID FLOW).
12. BORING PIT PLAN AND SECTION ARE CONCEPTUAL ONLY. CONTRACTOR SHALL PLAN FOR AND CONSTRUCT EXCAVATIONS APPROPRIATE FOR THE SITE CONDITIONS AND INSTALLATION. ALL EXCAVATIONS, INCLUDING ACCESS TO THEM, SHALL BE IN ACCORDANCE WITH OSHA, PERMIT AND REGULATORY REQUIREMENTS AND AAFB POLICY.
13. BLASTING IS NOT PERMITTED.
14. IF REQUIRED, CONTRACTOR SHALL PROVIDE AN APPROVED DEWATERING SYSTEM TO COMPLETE THE UTILITY INSTALLATION.
15. GEOTECHNICAL DATA PENDING.
16. UPON COMPLETION OF ANY TIE-INS TO THE CONNECTING CONDUITS, CONDUITS WITHIN THE BELL HOLE AREAS SHALL BE ADEQUATELY SUPPORTED VIA COMPACTED NATIVE MATERIAL AND/OR SANDBAGS UNTIL UNDISTURBED GROUND IS CONTACTED.
17. CONSTRUCTION ACTIVITIES NORMALLY WILL NOT BE PERMITTED WITHIN 30 METERS (100 FEET) OF THE RUNWAY/TAXIWAY EDGE. HOWEVER, CONSTRUCTION MAY BE PERMITTED WITHIN 30 METERS (100 FEET) OF THE RUNWAY/TAXIWAY EDGE ON A CASE-BY-CASE BASIS WITH A TEMPORARY WAIVER APPROVED BY THE INSTALLATION COMMANDER. (PER UFC 3-260-01 PAGE 525, PARAGRAPH B14-67.7.2 RUNWAY EDGES)
18. PER CONSTRUCTION SPECIFICATIONS, CONTRACTO TO DE-BEAD 12.750" OF HDPE CASING PIPE PRIOR TO INSTALLING CONDUITS.

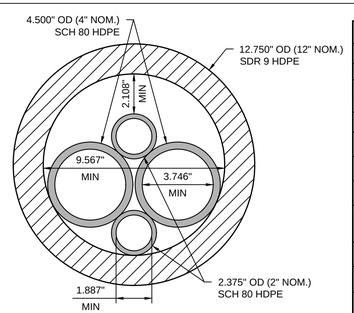

A TYPICAL
CASING / CONDUIT BUNDLE
CROSS SECTION

MATERIAL SPECIFICATIONS AND TOLERANCES	
ITEM	SPECIFICATIONS
CASING PIPE	(1) 12.750" OD (12" NOM.), SDR 9, HDPE
CONDUIT PIPE	(2) 4.500" OD (4" NOM.), SCH 80, HDPE (2) 2.375" OD (2" NOM.), SCH 80, HDPE
ITEM	TOLERANCE
PILOT HOLE ENTRY ANGLE	INCREASE ANGLE UP TO 0.5° (STEEPER). NO DECREASE IN ANGLE ALLOWED.
PILOT HOLE ENTRY LOCATION	AS PER COORDINATES PROVIDED BY COMPANY. NO CHANGES WITHOUT COMPANY APPROVAL.
PILOT HOLE EXIT ANGLE	INCREASE ANGLE UP TO 0.5° (STEEPER) OR DECREASE UP TO 1° (FLATTER).
PILOT HOLE EXIT LOCATION	UP TO 10 FEET BEYOND OR 5 FEET SHORT OF THE EXIT STAKE. BETWEEN 2.5 FEET LEFT AND 2.5 FEET RIGHT OF CENTERLINE.
PILOT HOLE DEPTH	UP TO 0 FEET ABOVE THE DESIGN DRILL PROFILE OR 5 FEET BELOW THE DESIGN DRILL PROFILE.
PILOT HOLE ALIGNMENT	SHALL REMAIN WITHIN 2.5 FEET LEFT OR RIGHT OF THE HDD CENTERLINE.
MINIMUM RADIUS OF CURVATURE	MINIMUM COMBINED (HORIZONTAL AND VERTICAL) RADIUS OF CURVATURE = "TBD" OVER EACH 3 JOINT SEGMENT

LEGEND

- PROPOSED TRENCHLESS CROSSING
- CONCEPTUAL BORE PIT
- TRENCHLESS ENDPOINT
- HH APPROX. HANDHOLE LOCATION

PRELIMINARY - NOT FOR CONSTRUCTION OR RECORDING

THIS DOCUMENT IS RELEASED FOR THE PURPOSE OF 35% DESIGN REVIEW UNDER THE AUTHORITY OF RICHARD A. WHITE TX LICENSE #86423 ON 09/08/23. IT IS NOT FOR CONSTRUCTION.

35% DESIGN

NOT FOR CONSTRUCTION

PROJECT INFORMATION

DESIGN EFSO REPAIRS AT VARIOUS FUELS FACILITIES - DESIGN EFSO REPAIRS TO HS-4 (Hydrant System #4)

ANDERSEN AIR FORCE BASE, GUAM

REVISIONS

MARK	DATE	DESCRIPTION

MANAGEMENT INFORMATION

ISSUE DATE: 09/20/2023
DESIGN GROUP: HDR
DESIGNED BY: D.P. BEARDEN
DRAWN BY: J. EKSTROM
CHECKED BY: M. RHODES
DESIGN FILE LOCATION: 10374683

SHEET TITLE

12" TRENCHLESS CROSSING 4-3 PLAN AND PROFILE

SHEET NUMBER

01C-043

SHEET - OF -

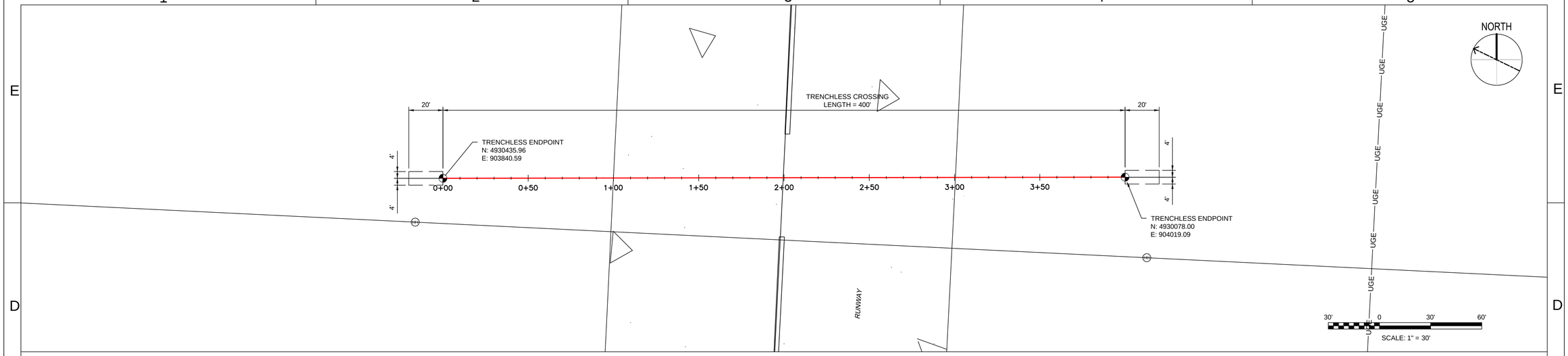

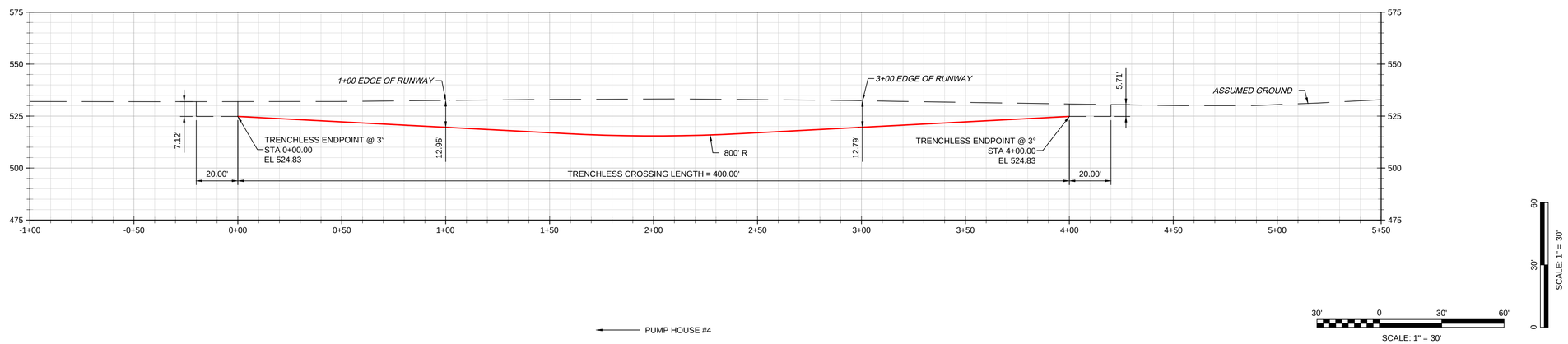

GENERAL NOTES

1. NORTHINGS AND EASTINGS ARE IN US SURVEY FEET REFERENCED TO XXXXXXXXXXXXXXXXXXXXXXXXXX.
2. ELEVATIONS ARE IN US FEET, REFERENCED TO XXXXXX.
3. AERIAL IMAGERY PROVIDED BY XXXXXXXX.
4. TOPOGRAPHIC SURVEY PENDING.
5. BASE FILE(S) PROVIDED BY ANDERSON AIR FORCE BASE.
6. LOCATIONS AND ELEVATIONS OF EXISTING FACILITIES/UTILITIES WERE PROVIDED BY XXXX.
7. ESTABLISHED BORE PATH STATIONING IS IN FEET BY HORIZONTAL MEASUREMENT AND IS REFERENCED TO THE CONTROL POSITION FOR THE BORE.
8. ALL SPECIFICATIONS, PERMIT REQUIREMENTS AND CONTRACT DOCUMENTS SHALL BE ADHERED TO BY CONTRACTOR.
9. CONTRACTOR SHALL MAKE NOTIFICATION TO AAFB BEFORE CONSTRUCTION COMMENCES.
10. PRESENCE, LOCATION, AND ELEVATIONS (POTHOLE IF NEEDED) OF ALL UTILITIES/FACILITIES TO BE VERIFIED BY CONTRACTOR PRIOR TO CONSTRUCTION AND CLEARLY MARKED AND EXPOSED (IF NECESSARY).
11. CONTRACTOR TO ACTIVELY MONITOR THE AREA FOR IMPACTS THAT COULD OCCUR AS A RESULT OF TRENCHLESS OPERATIONS (E.G. SETTLEMENT, HEAVE, AND FLUID FLOW).
12. BORING PIT PLAN AND SECTION ARE CONCEPTUAL ONLY. CONTRACTOR SHALL PLAN FOR AND CONSTRUCT EXCAVATIONS APPROPRIATE FOR THE SITE CONDITIONS AND INSTALLATION. ALL EXCAVATIONS, INCLUDING ACCESS TO THEM, SHALL BE IN ACCORDANCE WITH OSHA, PERMIT AND REGULATORY REQUIREMENTS AND AAFB POLICY.
13. BLASTING IS NOT PERMITTED.
14. IF REQUIRED, CONTRACTOR SHALL PROVIDE AN APPROVED DEWATERING SYSTEM TO COMPLETE THE UTILITY INSTALLATION.
15. GEOTECHNICAL DATA PENDING.
16. UPON COMPLETION OF ANY TIE-INS TO THE CONNECTING CONDUITS, CONDUITS WITHIN THE BELL HOLE AREAS SHALL BE ADEQUATELY SUPPORTED VIA COMPACTED NATIVE MATERIAL AND/OR SANDBAGS UNTIL UNDISTURBED GROUND IS CONTACTED.
17. CONSTRUCTION ACTIVITIES NORMALLY WILL NOT BE PERMITTED WITHIN 30 METERS (100 FEET) OF THE RUNWAY/TAXIWAY EDGE. HOWEVER, CONSTRUCTION MAY BE PERMITTED WITHIN 30 METERS (100 FEET) OF THE RUNWAY/TAXIWAY EDGE ON A CASE-BY-CASE BASIS WITH A TEMPORARY WAIVER APPROVED BY THE INSTALLATION COMMANDER. (PER UFC 3-260-01 PAGE 525, PARAGRAPH B14-67.7.2 RUNWAY EDGES)
18. PER CONSTRUCTION SPECIFICATIONS, CONTRACTO TO DE-BEAD 12.750" OF HDPE CASING PIPE PRIOR TO INSTALLING CONDUITS.

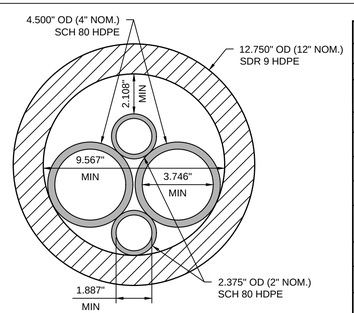

A TYPICAL
CASING / CONDUIT BUNDLE
CROSS SECTION

MATERIAL SPECIFICATIONS AND TOLERANCES

ITEM	SPECIFICATIONS
CASING PIPE	(1) 12.750" OD (12" NOM.), SDR 9, HDPE
CONDUIT PIPE	(2) 4.500" OD (4" NOM.), SCH 80, HDPE (2) 2.375" OD (2" NOM.), SCH 80, HDPE
ITEM	**TOLERANCE**
PILOT HOLE ENTRY ANGLE	INCREASE ANGLE UP TO 0.5° (STEEPER). NO DECREASE IN ANGLE ALLOWED.
PILOT HOLE ENTRY LOCATION	AS PER COORDINATES PROVIDED BY COMPANY. NO CHANGES WITHOUT COMPANY APPROVAL.
PILOT HOLE EXIT ANGLE	INCREASE ANGLE UP TO 0.5° (STEEPER) OR DECREASE UP TO 1° (FLATTER).
PILOT HOLE EXIT LOCATION	UP TO 10 FEET BEYOND OR 5 FEET SHORT OF THE EXIT STAKE. BETWEEN 2.5 FEET LEFT AND 2.5 FEET RIGHT OF CENTERLINE.
PILOT HOLE DEPTH	UP TO 0 FEET ABOVE THE DESIGN DRILL PROFILE OR 5 FEET BELOW THE DESIGN DRILL PROFILE.
PILOT HOLE ALIGNMENT	SHALL REMAIN WITHIN 2.5 FEET LEFT OR RIGHT OF THE HDD CENTERLINE.
MINIMUM RADIUS OF CURVATURE	MINIMUM COMBINED (HORIZONTAL AND VERTICAL) RADIUS OF CURVATURE = "TBD" OVER EACH 3 JOINT SEGMENT

LEGEND

- PROPOSED TRENCHLESS CROSSING
- CONCEPTUAL BORE PIT
- TRENCHLESS ENDPOINT
- HH APPROX. HANDHOLE LOCATION

THIS DOCUMENT IS RELEASED FOR THE PURPOSE OF 35% DESIGN REVIEW UNDER THE AUTHORITY OF RICHARD A. WHITE TX LICENSE #86423 ON 09/08/23. IT IS NOT FOR CONSTRUCTION.

PRELIMINARY - NOT FOR CONSTRUCTION OR RECORDING

35% DESIGN

NOT FOR CONSTRUCTION

PROJECT INFORMATION

DESIGN EFSO REPAIRS AT VARIOUS FUELS FACILITIES - DESIGN EFSO REPAIRS TO HS-4 (Hydrant System #4)

ANDERSEN AIR FORCE BASE, GUAM

REVISIONS

MARK	DATE	DESCRIPTION

MANAGEMENT INFORMATION

ISSUE DATE: 09/20/2023
DESIGN GROUP: HDR
DESIGNED BY: D.P. BEARDEN
DRAWN BY: J. EKSTROM
CHECKED BY: M. RHODES
DESIGN FILE LOCATION: 10374683

SHEET TITLE

12" TRENCHLESS CROSSING 4-4 PLAN AND PROFILE

SHEET NUMBER

01C-044

SHEET - OF -

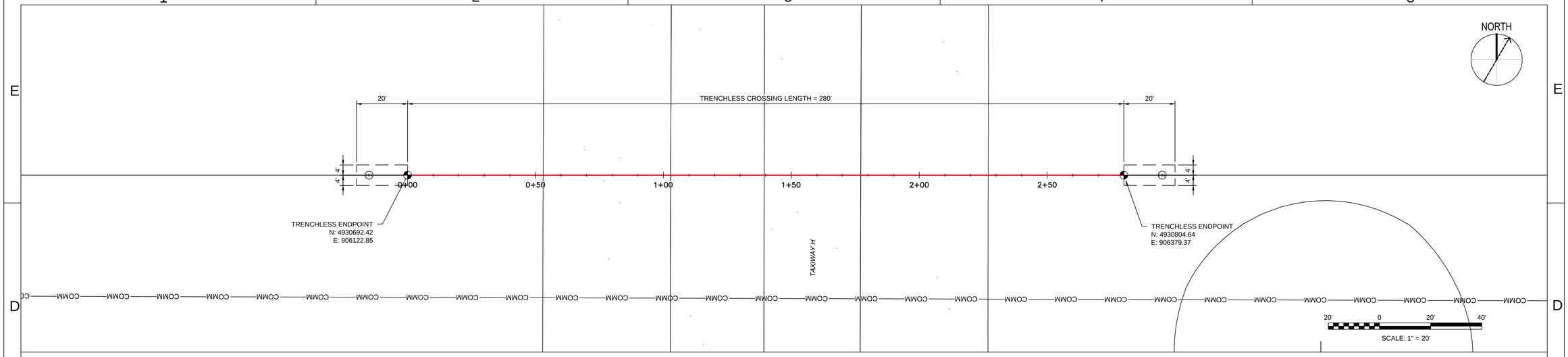

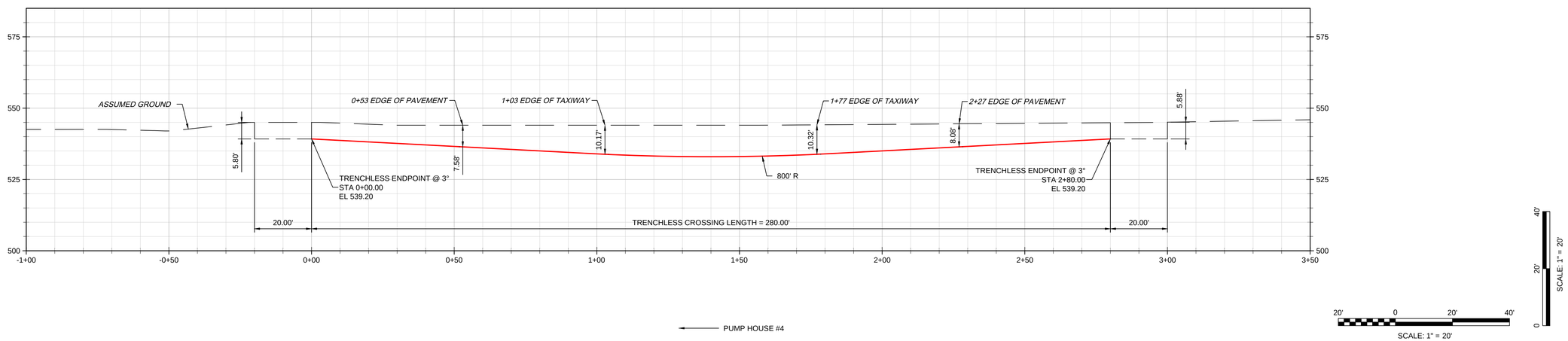

GENERAL NOTES

1. NORTHINGS AND EASTINGS ARE IN US SURVEY FEET REFERENCED TO XXXXXXXXXXXXXXXXXXXXXXXXX.
2. ELEVATIONS ARE IN US FEET, REFERENCED TO XXXXXX.
3. AERIAL IMAGERY PROVIDED BY XXXXXXXX.
4. TOPOGRAPHIC SURVEY PENDING.
5. BASE FILE(S) PROVIDED BY ANDERSON AIR FORCE BASE.
6. LOCATIONS AND ELEVATIONS OF EXISTING FACILITIES/UTILITIES WERE PROVIDED BY XXXX.
7. ESTABLISHED BORE PATH STATIONING IS IN FEET BY HORIZONTAL MEASUREMENT AND IS REFERENCED TO THE CONTROL POSITION FOR THE BORE.
8. ALL SPECIFICATIONS, PERMIT REQUIREMENTS AND CONTRACT DOCUMENTS SHALL BE ADHERED TO BY CONTRACTOR.
9. CONTRACTOR SHALL MAKE NOTIFICATION TO AAFB BEFORE CONSTRUCTION COMMENCES.
10. PRESENCE, LOCATION, AND ELEVATIONS (POTHOLE IF NEEDED) OF ALL UTILITIES/FACILITIES TO BE VERIFIED BY CONTRACTOR PRIOR TO CONSTRUCTION AND CLEARLY MARKED AND EXPOSED (IF NECESSARY).
11. CONTRACTOR TO ACTIVELY MONITOR THE AREA FOR IMPACTS THAT COULD OCCUR AS A RESULT OF TRENCHLESS OPERATIONS (E.G. SETTLEMENT, HEAVE, AND FLUID FLOW).
12. BORING PIT PLAN AND SECTION ARE CONCEPTUAL ONLY. CONTRACTOR SHALL PLAN FOR AND CONSTRUCT EXCAVATIONS APPROPRIATE FOR THE SITE CONDITIONS AND INSTALLATION. ALL EXCAVATIONS, INCLUDING ACCESS TO THEM, SHALL BE IN ACCORDANCE WITH OSHA, PERMIT AND REGULATORY REQUIREMENTS AND AAFB POLICY.
13. BLASTING IS NOT PERMITTED.
14. IF REQUIRED, CONTRACTOR SHALL PROVIDE AN APPROVED DEWATERING SYSTEM TO COMPLETE THE UTILITY INSTALLATION.
15. GEOTECHNICAL DATA PENDING.
16. UPON COMPLETION OF ANY TIE-INS TO THE CONNECTING CONDUITS, CONDUITS WITHIN THE BELL HOLE AREAS SHALL BE ADEQUATELY SUPPORTED VIA COMPACTED NATIVE MATERIAL AND/OR SANDBAGS UNTIL UNDISTURBED GROUND IS CONTACTED.
17. CONSTRUCTION ACTIVITIES NORMALLY WILL NOT BE PERMITTED WITHIN 30 METERS (100 FEET) OF THE RUNWAY/TAXIWAY EDGE. HOWEVER, CONSTRUCTION MAY BE PERMITTED WITHIN 30 METERS (100 FEET) OF THE RUNWAY/TAXIWAY EDGE ON A CASE-BY-CASE BASIS WITH A TEMPORARY WAIVER APPROVED BY THE INSTALLATION COMMANDER. (PER UFC 3-260-01 PAGE 525, PARAGRAPH B14-67.7.2 RUNWAY EDGES)
18. PER CONSTRUCTION SPECIFICATIONS, CONTRACTO TO DE-BEAD 12.750" OF HDPE CASING PIPE PRIOR TO INSTALLING CONDUITS.

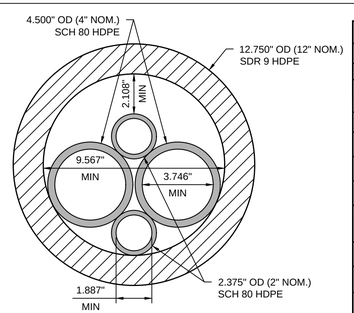

A TYPICAL
CASING / CONDUIT BUNDLE
CROSS SECTION

MATERIAL SPECIFICATIONS AND TOLERANCES	
ITEM	SPECIFICATIONS
CASING PIPE	(1) 12.750" OD (12" NOM.), SDR 9, HDPE
CONDUIT PIPE	(2) 4.500" OD (4" NOM.), SCH 80, HDPE (2) 2.375" OD (2" NOM.), SCH 80, HDPE
ITEM	TOLERANCE
PILOT HOLE ENTRY ANGLE	INCREASE ANGLE UP TO 0.5° (STEEPER). NO DECREASE IN ANGLE ALLOWED.
PILOT HOLE ENTRY LOCATION	AS PER COORDINATES PROVIDED BY COMPANY. NO CHANGES WITHOUT COMPANY APPROVAL.
PILOT HOLE EXIT ANGLE	INCREASE ANGLE UP TO 0.5° (STEEPER) OR DECREASE UP TO 1° (FLATTER).
PILOT HOLE EXIT LOCATION	UP TO 10 FEET BEYOND OR 5 FEET SHORT OF THE EXIT STAKE. BETWEEN 2.5 FEET LEFT AND 2.5 FEET RIGHT OF CENTERLINE.
PILOT HOLE DEPTH	UP TO 0 FEET ABOVE THE DESIGN DRILL PROFILE OR 5 FEET BELOW THE DESIGN DRILL PROFILE.
PILOT HOLE ALIGNMENT	SHALL REMAIN WITHIN 2.5 FEET LEFT OR RIGHT OF THE HDD CENTERLINE.
MINIMUM RADIUS OF CURVATURE	MINIMUM COMBINED (HORIZONTAL AND VERTICAL) RADIUS OF CURVATURE = "TBD" OVER EACH 3 JOINT SEGMENT

LEGEND

- PROPOSED TRENCHLESS CROSSING
- CONCEPTUAL BORE PIT
- TRENCHLESS ENDPOINT
- HH APPROX. HANDHOLE LOCATION

THIS DOCUMENT IS RELEASED FOR THE PURPOSE OF 35% DESIGN REVIEW UNDER THE AUTHORITY OF RICHARD A. WHITE TX LICENSE #86423 ON 09/08/23. IT IS NOT FOR CONSTRUCTION.

PRELIMINARY - NOT FOR CONSTRUCTION OR RECORDING

35% DESIGN

NOT FOR CONSTRUCTION

PROJECT INFORMATION

DESIGN EFSO REPAIRS AT VARIOUS FUELS FACILITIES - DESIGN EFSO REPAIRS TO HS-4 (Hydrant System #4)

ANDERSEN AIR FORCE BASE, GUAM

REVISIONS

MARK	DATE	DESCRIPTION

MANAGEMENT INFORMATION

ISSUE DATE: 09/20/2023
DESIGN GROUP: HDR
DESIGNED BY: D.P. BEARDEN
DRAWN BY: J. EKSTROM
CHECKED BY: M. RHODES
DESIGN FILE LOCATION: 10374683

SHEET TITLE

12" TRENCHLESS CROSSING 4-5 PLAN AND PROFILE

SHEET NUMBER

01C-045

SHEET - OF -

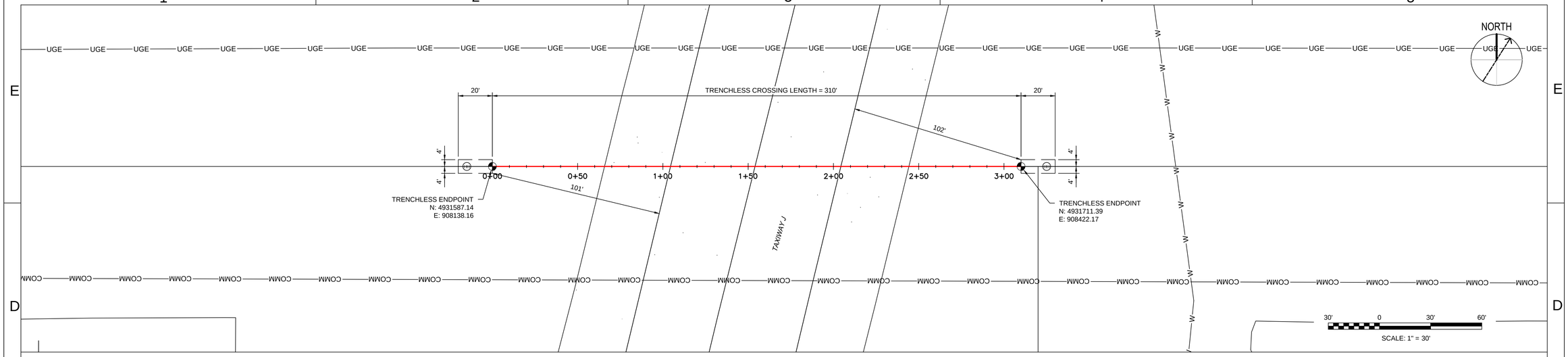

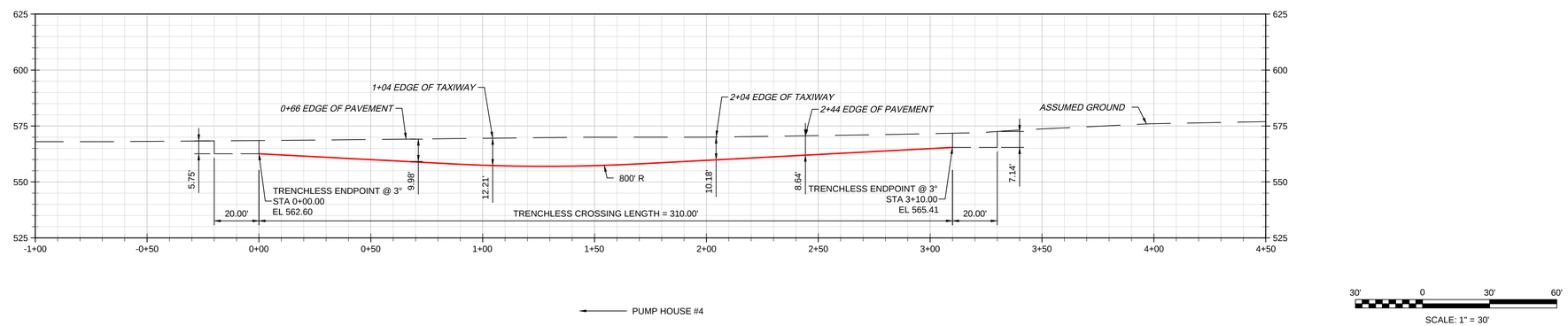

GENERAL NOTES

1. NORTHINGS AND EASTINGS ARE IN US SURVEY FEET REFERENCED TO XXXXXXXXXXXXXXXXXXXXXXXXXX.
2. ELEVATIONS ARE IN US FEET, REFERENCED TO XXXXXX.
3. AERIAL IMAGERY PROVIDED BY XXXXXXXX.
4. TOPOGRAPHIC SURVEY PENDING.
5. BASE FILE(S) PROVIDED BY ANDERSON AIR FORCE BASE.
6. LOCATIONS AND ELEVATIONS OF EXISTING FACILITIES/UTILITIES WERE PROVIDED BY XXXX.
7. ESTABLISHED BORE PATH STATIONING IS IN FEET BY HORIZONTAL MEASUREMENT AND IS REFERENCED TO THE CONTROL POSITION FOR THE BORE.
8. ALL SPECIFICATIONS, PERMIT REQUIREMENTS AND CONTRACT DOCUMENTS SHALL BE ADHERED TO BY CONTRACTOR.
9. CONTRACTOR SHALL MAKE NOTIFICATION TO AAFB BEFORE CONSTRUCTION COMMENCES.
10. PRESENCE, LOCATION, AND ELEVATIONS (POTHOLE IF NEEDED) OF ALL UTILITIES/FACILITIES TO BE VERIFIED BY CONTRACTOR PRIOR TO CONSTRUCTION AND CLEARLY MARKED AND EXPOSED (IF NECESSARY).
11. CONTRACTOR TO ACTIVELY MONITOR THE AREA FOR IMPACTS THAT COULD OCCUR AS A RESULT OF TRENCHLESS OPERATIONS (E.G. SETTLEMENT, HEAVE, AND FLUID FLOW).
12. BORING PIT PLAN AND SECTION ARE CONCEPTUAL ONLY. CONTRACTOR SHALL PLAN FOR AND CONSTRUCT EXCAVATIONS APPROPRIATE FOR THE SITE CONDITIONS AND INSTALLATION. ALL EXCAVATIONS, INCLUDING ACCESS TO THEM, SHALL BE IN ACCORDANCE WITH OSHA, PERMIT AND REGULATORY REQUIREMENTS AND AAFB POLICY.
13. BLASTING IS NOT PERMITTED.
14. IF REQUIRED, CONTRACTOR SHALL PROVIDE AN APPROVED DEWATERING SYSTEM TO COMPLETE THE UTILITY INSTALLATION.
15. GEOTECHNICAL DATA PENDING.
16. UPON COMPLETION OF ANY TIE-INS TO THE CONNECTING CONDUITS, CONDUITS WITHIN THE BELL HOLE AREAS SHALL BE ADEQUATELY SUPPORTED VIA COMPACTED NATIVE MATERIAL AND/OR SANDBAGS UNTIL UNDISTURBED GROUND IS CONTACTED.
17. CONSTRUCTION ACTIVITIES NORMALLY WILL NOT BE PERMITTED WITHIN 30 METERS (100 FEET) OF THE RUNWAY/TAXIWAY EDGE. HOWEVER, CONSTRUCTION MAY BE PERMITTED WITHIN 30 METERS (100 FEET) OF THE RUNWAY/TAXIWAY EDGE ON A CASE-BY-CASE BASIS WITH A TEMPORARY WAIVER APPROVED BY THE INSTALLATION COMMANDER. (PER UFC 3-260-01 PAGE 525, PARAGRAPH B14-67.7.2 RUNWAY EDGES)
18. PER CONSTRUCTION SPECIFICATIONS, CONTRACTO TO DE-BEAD 12.750" OF HDPE CASING PIPE PRIOR TO INSTALLING CONDUITS.

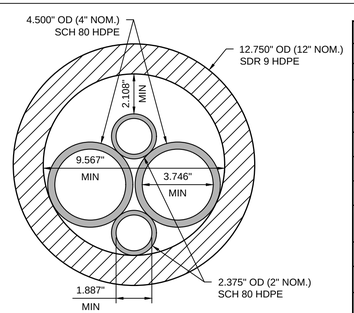

A TYPICAL
CASING / CONDUIT BUNDLE CROSS SECTION

MATERIAL SPECIFICATIONS AND TOLERANCES	
ITEM	SPECIFICATIONS
CASING PIPE	(1) 12.750" OD (12" NOM.), SDR 9, HDPE
CONDUIT PIPE	(2) 4.500" OD (4" NOM.), SCH 80, HDPE (2) 2.375" OD (2" NOM.), SCH 80, HDPE
ITEM	TOLERANCE
PILOT HOLE ENTRY ANGLE	INCREASE ANGLE UP TO 0.5° (STEEPER). NO DECREASE IN ANGLE ALLOWED.
PILOT HOLE ENTRY LOCATION	AS PER COORDINATES PROVIDED BY COMPANY. NO CHANGES WITHOUT COMPANY APPROVAL.
PILOT HOLE EXIT ANGLE	INCREASE ANGLE UP TO 0.5° (STEEPER) OR DECREASE UP TO 1° (FLATTER).
PILOT HOLE EXIT LOCATION	UP TO 10 FEET BEYOND OR 5 FEET SHORT OF THE EXIT STAKE. BETWEEN 2.5 FEET LEFT AND 2.5 FEET RIGHT OF CENTERLINE.
PILOT HOLE DEPTH	UP TO 0 FEET ABOVE THE DESIGN DRILL PROFILE OR 5 FEET BELOW THE DESIGN DRILL PROFILE.
PILOT HOLE ALIGNMENT	SHALL REMAIN WITHIN 2.5 FEET LEFT OR RIGHT OF THE HDD CENTERLINE.
MINIMUM RADIUS OF CURVATURE	MINIMUM COMBINED (HORIZONTAL AND VERTICAL) RADIUS OF CURVATURE = "TBD" OVER EACH 3 JOINT SEGMENT

LEGEND

- PROPOSED TRENCHLESS CROSSING
- CONCEPTUAL BORE PIT
- TRENCHLESS ENDPOINT
- (BH) APPROX. HANDHOLE LOCATION

PRELIMINARY - NOT FOR CONSTRUCTION OR RECORDING

THIS DOCUMENT IS RELEASED FOR THE PURPOSE OF 35% DESIGN REVIEW UNDER THE AUTHORITY OF RICHARD A. WHITE TX LICENSE #86423 ON 09/08/23. IT IS NOT FOR CONSTRUCTION.

35% DESIGN

NOT FOR CONSTRUCTION

PROJECT INFORMATION

DESIGN EFSO REPAIRS AT VARIOUS FUELS FACILITIES - DESIGN EFSO REPAIRS TO HS-4 (Hydrant System #4)

ANDERSEN AIR FORCE BASE, GUAM

REVISIONS

MARK	DATE	DESCRIPTION

MANAGEMENT INFORMATION

ISSUE DATE: 09/20/2023
DESIGN GROUP: HDR
DESIGNED BY: D.P. BEARDEN
DRAWN BY: T. VONBERGE
CHECKED BY: M. RHODES
DESIGN FILE LOCATION: 10374683

SHEET TITLE

12" TRENCHLESS CROSSING 4-6 PLAN AND PROFILE

SHEET NUMBER

01C-046

SHEET - OF -