SHEET INDEX

SEQ	NAVFAC DRAWING NO.	NO	DRAWING TITLE
			GENERAL
1	17361624	G-001	COVER SHEET
2	17361625	G-002	SHEET INDEX
3	17361626	G-003	SHEET INDEX
4	17361627	GI001	LOCATION MAP AND HAUL ROUTE
5	17361628	GI002	TYPICAL SYMBOLS AND ABBREVIATIONS
6	17361629	GI003	ABBREVIATIONS CONTINUED
7	17361630	GI108	PHASING PLAN
8	17361631	GI109	AIRFIELD PHASING PLAN
			SURVEY/MAPPING
9	17361632	V-101	OVERALL EXISTING CONDITIONS
10	17361633	V-102	EXISTING CONDITIONS - AREA 1
11	17361634	V-103	EXISTING CONDITIONS - AREA 2
12	17361635	V-104	EXISTING CONDITIONS - AREA 3
13	17361636	V-105	EXISTING CONDITIONS - AREA 4
14	17361637	V-106	EXISTING CONDITIONS - AREA 5
15	17361638	V-107	EXISTING CONDITIONS - AREA 6
16	17361639	V-108	EXISTING CONDITIONS - AREA 7
17	17361640	V-109	EXISTING CONDITIONS - AREA 8
18	17361641	V-110	EXISTING CONDITIONS - AREA 9
19	17361642	V-111	EXISTING CONDITIONS - AREA 10
20	17361643	V-112	EXISTING CONDITIONS - AREA 11
21	17361644	V-113	EXISTING CONDITIONS - AREA 12
22	17361645	V-114	EXISTING CONDITIONS - AREA 13
23	17361646	V-115	EXISTING CONDITIONS - AREA 14
24	17361647	V-116	EXISTING CONDITIONS - AREA 15
25	17361648	V-117	EXISTING CONDITIONS - AREA 16
26	17361649	V-118	EXISTING CONDITIONS - AREA 17
27	17361650	V-119	EXISTING CONDITIONS - AREA 18
28	17361651	V-120	EXISTING CONDITIONS - AREA 19
29	17361652	V-121	EXISTING CONDITIONS - AREA 20
30	17361653	V-122	EXISTING CONDITIONS - AREA 21
31	17361654	V-123	EXISTING CONDITIONS - AREA 22
32	17361655	V-124	EXISTING CONDITIONS - AREA 23
33	17361656	V-125	EXISTING CONDITIONS - AREA 24
34	17361657	V-126	EXISTING CONDITIONS - AREA 25
35	17361658	V-127	EXISTING CONDITIONS - AREA 26
36	17361659	V-128	SURVEY CONTROL PLAN
			GEOTECHNICAL
37	17361660	BB101	LIMITED GEOTECHNICAL FIELD WORK PLAN
38	17361661	BB102	PHASE 2 GEOTECHNICAL FIELD WORK
39	17361662	BB103	BORING LOGS
40	17361663	BB104	BORING LOGS
41	17361664	BB105	BORING LOGS
42	17361665	BB106	BORING LOGS
43	17361666	BB107	BORING LOGS
44	17361667	BB108	BORING LOGS
45	17361668	BB109	BORING LOGS
46	17361669	BB110	BORING LOGS
47	17361670	BB111	BORING LOGS
48	17361671	BB112	BORING LOGS
49	17361672	BB113	BORING LOGS
50	17361673	BB114	BORING LOGS
51	17361674	BB115	BORING LOGS
52	17361675	BB116	BORING LOGS
53	17361676	BB117	BORING LOGS
54	17361677	BB118	BORING LOGS
55	17361678	BB119	BORING LOGS
56	17361679	BB120	BORING LOGS
56.1	17362005	BB121	EXISTING ERT SURVEY INFORMATION
56.2	17362006	BB122	EXISTING ERT SURVEY INFORMATION
56.3	17362007	BB123	EXISTING ERT SURVEY INFORMATION
57.4	17362008	BB124	EXISTING ERT SURVEY INFORMATION
58.5	17362009	BB125	EXISTING ERT SURVEY INFORMATION
59.6	17362010	BB126	APPROXIMATE LOCATIONS OF POTENTIAL KARST FEATURES
			CIVIL
57	17361680	C-001	GENERAL NOTES
58	17361681	CD101	OVERALL DEMOLITION PLAN
59	17361682	CD102	DEMOLITION PLAN - AREA 1
60	17361683	CD103	DEMOLITION PLAN - AREA 2
61	17361684	CD104	DEMOLITION PLAN - AREA 3
62	17361685	CD105	DEMOLITION PLAN - AREA 4
63	17361686	CD106	DEMOLITION PLAN - AREA 5
64	17361687	CD107	DEMOLITION PLAN - AREA 6
65	17361688	CD108	DEMOLITION PLAN - AREA 7
66	17361689	CD109	DEMOLITION PLAN - AREA 8
67	17361690	CD110	DEMOLITION PLAN - AREA 9
68	17361691	CD112	DEMOLITION PLAN - AREA 11
69	17361692	CD113	DEMOLITION PLAN - AREA 12
70	17361693	CD114	DEMOLITION PLAN - AREA 13
71	17361694	CD115	DEMOLITION PLAN - AREA 14
72	17361709	CD116	DEMOLITION PLAN - AREA 15
73	17361695	CD117	DEMOLITION PLAN - AREA 16
74	17361696	CD118	DEMOLITION PLAN - AREA 17
75	17361697	CD119	DEMOLITION PLAN - AREA 18
76	17361698	CD120	DEMOLITION PLAN - AREA 19
77	17361699	CD121	DEMOLITION PLAN - AREA 20
78	17361700	CD122	DEMOLITION PLAN - AREA 21
79	17361701	CD123	DEMOLITION PLAN - AREA 22
80	17361702	CD124	DEMOLITION PLAN - AREA 23
81	17361703	CD125	DEMOLITION PLAN - AREA 24
82	17361704	CD126	DEMOLITION PLAN - AREA 25
83	17361705	CD127	DEMOLITION PLAN - AREA 26
84	17361706	CD130	NOT USED
85	17361707	CD131	NOT USED
86	17361708	CD132	NOT USED
87	17361710	CD134	NOT USED

1

SHEET INDEX

SEQ	NAVFAC DRAWING NO.	NO	CIVIL DRAWING TITLE
88	17361711	CD135	NOT USED
89	17361712	CD136	NOT USED
90	17361713	CD137	NOT USED
91	17361714	CD138	NOT USED
92	17361715	CD139	NOT USED
93	17361716	CS101	OVERALL SITE & PAVING PLAN
94	17361717	CS102	SITE & PAVING PLAN - AREA 1
95	17361718	CS103	SITE & PAVING PLAN - AREA 2
96	17361719	CS104	SITE & PAVING PLAN - AREA 3
97	17361720	CS105	SITE & PAVING PLAN - AREA 4
98	17361721	CS106	SITE & PAVING PLAN - AREA 5
99	17361722	CS107	SITE & PAVING PLAN - AREA 6
100	17361723	CS108	SITE & PAVING PLAN - AREA 7
101	17361724	CS109	SITE & PAVING PLAN - AREA 8
102	17361725	CS110	SITE & PAVING PLAN - AREA 9
103	17361726	CS111	SITE & PAVING PLAN - AREA 10
104	17361727	CS112	SITE & PAVING PLAN - AREA 11
105	17361728	CS113	SITE & PAVING PLAN - AREA 12
106	17361729	CS114	SITE & PAVING PLAN - AREA 13
107	17361730	CS115	SITE & PAVING PLAN - AREA 14
108	17361731	CS120	SITE & PAVING PLAN - AREA 20
109	17361732	CS121	SITE & PAVING PLAN - AREA 21
110	17361733	CS122	SITE & PAVING PLAN - AREA 22
111	17361734	CS123	SITE & PAVING PLAN - AREA 23
112	17361735	CS124	SITE & PAVING PLAN - AREA 24
113	17361736	CS125	SITE & PAVING PLAN - AREA 25
114	17361737	CS126	SITE & PAVING PLAN - AREA 26
115	17361738	CS130	OVERALL PAVEMENT MARKING PLAN
116	17361739	CS131	PAVEMENT MARKING PLAN - AREA 1
117	17361740	CS132	PAVEMENT MARKING PLAN - AREA 2
118	17361741	CS133	PAVEMENT MARKING PLAN - AREA 3
119	17361742	CS134	PAVEMENT MARKING PLAN - AREA 5
120	17361743	CS135	PAVEMENT MARKING PLAN - AREA 6
121	17361744	CS136	PAVEMENT MARKING PLAN - AREA 7
122	17361745	CS137	PAVEMENT MARKING PLAN - AREA 11
123	17361746	CS138	PAVEMENT MARKING PLAN - AREA 12
124	17361747	CS139	PAVEMENT MARKING PLAN - AREA 13
125	17361748	CS140	PAVEMENT MARKING PLAN - AREA 20
126	17361749	CS141	PAVEMENT MARKING PLAN - AREA 21
127	17361750	CS142	PAVEMENT MARKING PLAN - AREA 22
128	17361751	CS143	PAVEMENT MARKING PLAN - AREA 23
129	17361752	CS144	PAVEMENT MARKING PLAN - AREA 24
130	17361753	CS145	PAVEMENT MARKING PLAN - AREA 25
131	17361754	CS146	PAVEMENT MARKING PLAN - AREA 26
132	17361755	CS201	ROADWAY PLAN & PROFILE RW01 STA 0+00-6+25 - AREA 22
133	17361756	CS202	ROADWAY PLAN & PROFILE RW01 STA 6+25-12+50 - AREA 22 & 23
134	17361757	CS203	ROADWAY PLAN & PROFILE RW01 STA 12+50-18+75 - AREA 23 & 24
135	17361758	CS204	ROADWAY PLAN & PROFILE RW01 STA 18+75-25+00 - AREA 24 & 25
136	17361759	CS205	ROADWAY PLAN & PROFILE RW01 STA 25+00-31+25 - AREA 25 & 26
137	17361760	CS206	ROADWAY PLAN & PROFILE RW01 STA 31+25-37+50 - AREA 21 & 26
138	17361761	CS207	ROADWAY PLAN & PROFILE RW01 STA 37+50-44+00 - AREA 21
139	17361762	CS212	TAXILANE PLAN & PROFILE L2 STA 00+00-06+50
140	17361763	CS213	TAXILANE PLAN & PROFILE L2 STA 06+50-13+00
141	17361764	CS215	TAXILANE PLAN & PROFILE L3 STA 00+00-06+50
142	17361765	CS216	TAXILANE PLAN & PROFILE L3 STA 06+50-13+00
143	17361766	CS301	ROADWAY SECTIONS - SAMPLE LINE PLAN
144	17361767	CS302	ROADWAY SECTIONS - RW01
145	17361768	CS303	ROADWAY SECTIONS - RW01
146	17361769	CS304	ROADWAY SECTIONS - RW01
147	17361770	CS305	ROADWAY SECTIONS - RW01
148	17361771	CS306	ROADWAY SECTIONS - RW01
149	17361772	CS307	ROADWAY SECTIONS - RW01
150	17361773	CS308	ROADWAY SECTIONS - RW01
151	17361774	CS309	ROADWAY SECTIONS - RW01
152	17361775	CS310	APRON SECTIONS - A01
153	17361776	CS311	APRON SECTIONS - A02
154	17361777	CS312	APRON SECTIONS - A03
155	17361778	CS501	SITE DETAILS
156	17361779	CS502	SITE DETAILS
157	17361780	CS503	SITE DETAILS
158	17361781	CS504	SITE DETAILS
159	17361782	CS505	SITE DETAILS
160	17361783	CS506	SITE DETAILS
161	17361784	CS507	SITE DETAILS
162	17361785	CT101	OVERALL JOINTING PLAN
163	17361786	CT102	JOINTING PLAN - AREA 1
164	17361787	CT103	JOINT ELEVATION PLAN - AREA 1
165	17361788	CT104	JOINTING PLAN - AREA 2
166	17361789	CT105	JOINT ELEVATION PLAN - AREA 2
167	17361790	CT106	JOINTING PLAN - AREA 3
168	17361791	CT107	JOINT ELEVATION PLAN - AREA 3
169	17361792	CT108	JOINTING PLAN - AREA 6
170	17361793	CT109	JOINT ELEVATION PLAN - AREA 6
171	17361794	CT110	JOINTING PLAN - AREA 7
172	17361795	CT111	JOINT ELEVATION PLAN - AREA 7
173	17361796	CT112	JOINTING PLAN - AREA 12
174	17361797	CT113	JOINT ELEVATION PLAN - AREA 12
175	17361798	CT114	JOINTING PLAN - AREA 13
176	17361799	CT115	JOINT ELEVATION PLAN - AREA 13
177	17361800	CG101	OVERALL GRADING AND DRAINAGE PLAN
178	17361801	CG102	GRADING AND DRAINAGE PLAN - AREA 1
179	17361802	CG103	GRADING AND DRAINAGE PLAN - AREA 2
180	17361803	CG104	GRADING AND DRAINAGE PLAN - AREA 3
181	17361804	CG105	GRADING AND DRAINAGE PLAN - AREA 4
182	17361805	CG106	GRADING AND DRAINAGE PLAN - AREA 5
183	17361806	CG107	GRADING AND DRAINAGE PLAN - AREA 6
184	17361807	CG108	GRADING AND DRAINAGE PLAN - AREA 7

SHEET INDEX

SEQ	NAVFAC DRAWING NO.	NO	CIVIL DRAWING TITLE
185	17361808	CG109	GRADING AND DRAINAGE PLAN - AREA 8
186	17361809	CG110	GRADING AND DRAINAGE PLAN - AREA 9
187	17361810	CG112	GRADING AND DRAINAGE PLAN - AREA 11
188	17361811	CG113	GRADING AND DRAINAGE PLAN - AREA 12
189	17361812	CG114	GRADING AND DRAINAGE PLAN - AREA 13
190	17361813	CG115	GRADING AND DRAINAGE PLAN - AREA 14
191	17361828	CG116	GRADING AND DRAINAGE PLAN - AREA15
192	17361814	CG117	GRADING AND DRAINAGE PLAN - AREA 16
193	17361815	CG118	GRADING AND DRAINAGE PLAN - AREA 17
194	17361816	CG119	GRADING AND DRAINAGE PLAN - AREA 18
195	17361817	CG120	GRADING AND DRAINAGE PLAN - AREA 19
196	17361818	CG121	GRADING AND DRAINAGE PLAN - AREA 20
197	17361819	CG122	GRADING AND DRAINAGE PLAN - AREA 21
198	17361820	CG123	GRADING AND DRAINAGE PLAN - AREA 22
199	17361821	CG124	GRADING AND DRAINAGE PLAN - AREA 23
200	17361822	CG125	GRADING AND DRAINAGE PLAN - AREA 24
201	17361823	CG126	GRADING AND DRAINAGE PLAN - AREA 25
202	17361824	CG127	GRADING AND DRAINAGE PLAN - AREA 26
203	17361825	CG130	NOT USED
204	17361826	CG131	NOT USED
205	17361827	CG132	NOT USED
206	17361829	CG134	NOT USED
207	17361830	CG135	NOT USED
208	17361831	CG136	NOT USED
209	17361832	CG137	NOT USED
210	17361833	CG138	NOT USED
211	17361834	CG139	NOT USED
212	17361835	CG140	LIMITS OF GEOSYNTHETIC CLAY LINER
213	17361836	CG141	LIMITS OF GEOSYNTHETIC CLAY LINER
214	17361837	CG142	LAWN RESTORATION PLAN
215	17361838	CG143	NOT USED
216	17361839	CG144	KARST FEATURES PLAN
217	17361840	CG145	NOT USED
218	17361841	CG146	KARST FEATURES DETAIL
219	17361842	CG147	TURF REINFORCEMENT PLAN
220	17361843	CG148	NOT USED
221	17361844	CG201	DRAINAGE PROFILES
222	17361845	CG202	DRAINAGE PROFILES
223	17361846	CG203	DRAINAGE PROFILES
224	17361847	CG204	DRAINAGE PROFILES
225	17361848	CG205	DRAINAGE PROFILES
226	17361849	CG206	DRAINAGE PROFILES
227	17361850	CG207	DRAINAGE PROFILES
228	17361851	CG208	DRAINAGE PROFILES
229	17361852	CG209	DRAINAGE PROFILES
230	17361853	CG210	DRAINAGE PROFILES
231	17361854	CG211	DRAINAGE PROFILES
232	17361855	CG212	DRAINAGE PROFILES
233	17361856	CG501	DRAINAGE DETAILS
234	17361857	CG502	DRAINAGE DETAILS
235	17361858	CG503	DRAINAGE DETAILS
236	17361859	CG504	DRAINAGE DETAILS
237	17361860	CG505	DRAINAGE DETAILS
238	17361861	CG506	DRAINAGE DETAILS
239	17361862	CG507	SAND FILTER DETAILS
240	17361863	CU101	OVERALL UTILITY PLAN
241	17361864	CU102	UTILITY PLAN - AREA 1
242	17361865	CU103	UTILITY PLAN - AREA 6
243	17361866	CU104	UTILITY PLAN - AREA 7
244	17361867	CU105	UTILITY PLAN - AREA 8
245	17361868	CU106	UTILITY PLAN - AREA 23
246	17361869	CU107	UTILITY PLAN - AREA 24
247	17361870	CU108	UTILITY PLAN - AREA 25
248	17361871	CU109	UTILITY PLAN - AREA 26
249	17361872	CU201	UTILITY PROFILES
250	17361873	CU202	UTILITY PROFILES
251	17361874	CU203	UTILITY PROFILES
252	17361875	CU501	UTILITY DETAILS
253	17361876	CU502	UTILITY DETAILS

SYM	DESCRIPTION	DATE
1	AMEND.0003 - SHEET ADDED	24-APR-26

NAVFAC

REGISTERED ARCHITECT
CHRIS ALFSTAD
26963
STATE OF TEXAS
04/24/2026
TEXAS REGISTERED ENGINEERING FIRM F-2966 SEAL

Jacobs / BURNS MCDONNELL
JACOBS/B&M, A JOINT VENTURE
1100 NORTH GLEBE ROAD
SUITE 500
ARLINGTON, VA 22201
A/E Contract No. N62742-20-D-0002
A/E Task Order No. N6274219151
JEG NO. 0340803
A/E INFO

APPROVED
FOR COMMANDER NAVFAC DATE 4/29/2026

ACTIVITY
AFIMSC APPROVAL PER NAVFAC SAT-TO CHECKLIST

SATISFACTORY TO DATE 31 DEC 2025

DES: FMJ	DRW: FMJ	REV: CAA
PM/DM		KKK
BRANCH MANAGER		SMK
CHIEF ENG/ARCH		SMK
FIRE PROTECTION		RO

DEPARTMENT OF THE NAVY
NAVAL FACILITIES ENGINEERING SYSTEMS COMMAND
NAVFAC PACIFIC
NAVAL FACILITIES ENGINEERING SYSTEMS COMMAND ~ PACIFIC
JOINT REGION MARIANAS (JRM)
ANDERSEN AIR FORCE BASE
GUAM

FY24 AJJY183012 (P-012),
PDI: NORTH AIRCRAFT PARKING RAMP

SHEET INDEX

SCALE: AS SHOWN
EPROJECTS NO.: 1665555
CONSTR CONTROL NO.
NAVFAC DRAWING NO. 17361625
SHEET 2 OF 377

G-002

REDESIGN FINAL SUBMITTAL

IF SHEET IS LESS THAN 22" X 34"
REDUCED PRINT. USE GRAPHIC SCALES

FILE NAME: C:\Users\MendezFX\Documents\P012-1665555-G-3D_Frankie.Mendez.rvt
LAYOUT NAME: SHEET INDEX
PLOTTED: 4/24/2026 8:22:23 AM
USER: FMJ

B. Tuesday, September 3, 2024, 08:30 - 14:30 (Dr. Miklavič and Dr. Kim)

Table 1. Setting up the ERT electrodes at the North Karst Area and North Boring Route.

Name	North Boring Route (1)	North Karst Site (2-1)	North Karst, suspect sinkhole (2-2)
Direction	South 150°		
No. of ERT sensors used	40 electrodes		
Total length measured	390 ft		195 ft
Total depth measured	75 ft		35 ft
Distance between each electrode	10 ft		5 ft

C. Wednesday, September 4, 2024, 08:30 - 15:30 (Dr. Miklavič and Dr. Kim)

Table 2. Setting up the ERT electrodes at the South Karst Area.

Name	Main South Karst South-North (3)	Main South Karst West-East (4)	South Karst West (5)
Direction	North 0°	East 90°	West 260°
No. of ERT sensors used	40 electrodes		
Total length measured	234 ft	390 ft	234 ft
Total depth measured	40 ft	75 ft	40 ft
Distance between each electrode	6 ft	10 ft	6 ft

2 ELECTRICAL RESISTIVITY TOMOGRAPHY

2.1 Surveying Equipment

The ERT instrument used in this project consists of a resistivity meter, electrodes, stainless steel rods, and data-collecting software. The maximum spacing between two electrodes is 17.7 ft. A set of electrode chains consists of 20 electrodes with a total length of 336 ft. In this project, two sets of electrodes, which can accommodate up to 40 electrodes, were connected to use up to 40 electrodes. Electrodes are placed following a straight line to measure the resistivity of the cross-section of the line. Resistivity data can be collected to the depth of about one-fourth of the length of the electrode straight line during testing.

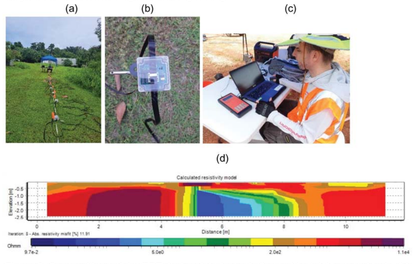

Figure 6. Compositions of the ERT device: (a) electrode lines with stainless steel rods, (b) electrodes, (c) resistivity meter and computer, and (d) a sample image of the ERT tomographic inversion profiles (Ohm·m).

2.2 ERT Methods

In the analysis of ERT data, four electrode array methods were applied: Schlumberger, Wenner, Wenner beta, and dipole-dipole. Each method employs a unique resistivity data collection strategy, which is outlined below.

The Wenner array is the simplest configuration, utilizing four electrodes positioned along a straight line. In this method, two electrodes measure the potential difference, while the other two placed adjacent to the first pair, measure the current. This array is commonly used for profiling to explore lateral variations in subsurface resistivity. The Schlumberger array, although similar to the Wenner array in its potential and current collection approach, operates based on electric field intensity rather than directly measuring the potential difference. While these differences in methodology exist, the results produced by the Wenner and Schlumberger arrays are generally comparable.

The dipole-dipole array differs from the Wenner-based configurations by employing pairs of electrodes with opposite charges, rather than distinct poles. This arrangement facilitates faster data acquisition, as it allows for simultaneous measurements across multiple receiver channels. The Wenner beta array closely resembles the dipole-dipole array in its configuration and data collection strategy, resulting in generally comparable outputs (Okpoli 2013). Further technical details regarding these methods are available on the U.S. Environmental Protection Agency's website (U.S. EPA Electrical Resistivity Description).

In this project, the ERT data were collected using SchwaRTech earth resistivity meter. The tomographic inversion (TI) of the acquired resistivity data was performed using Seequent's Res2DInv software for data processing and imaging. The outputs of the TI consist of two-dimensional (2-D) modelec cross-sectional plots displaying resistivity values (Ohm·m) as a function of depth. These models require further interpretation to correlate them with actual subsurface conditions, including geometry, lithology, hydrogeology, and other features.

2.3 Methods Applied in the Survey

In this survey we collected data using dipole-dipole, Schlumberger, Wenner and Wenner beta arrays. The images generated from the dipole-dipole and Wenner beta arrays displayed a high degree of similarity, as did the images from the Schlumberger and Wenner arrays. However, the two groups (dipole-dipole/Wenner beta vs. Schlumberger/Wenner) exhibited significant differences. The choice of electrode array can influence the resulting model, especially in environments with high resistivity contrasts, such as those encountered in this survey. In such conditions, the Schlumberger array, or alternatively the Wenner array, is generally preferred due to its tendency to produce geologically more plausible results. Nevertheless, at the test sites with uniform terrain and well-characterized subsurface features, the dipole-dipole array occasionally yielded more accurate models, providing better depth resolution but with reduced precision in outlining subsurface structures. For this reason, images obtained from both the dipole-dipole and Schlumberger arrays are presented for comparison in this report.

The depths indicated on the ERT profiles are approximate, with a minimum error margin of ±5 ft. For model calibration, elevation data were referenced from the Guam 2020 Digital Elevation Model (DEM). The surveyed elevations within the South Karst Area ranged from 476 to 488 feet, while those in the North Karst Area and along the North Boring Route ranged from 483 to 490 feet. Detailed elevation data for each electrode are provided in Appendix 2.

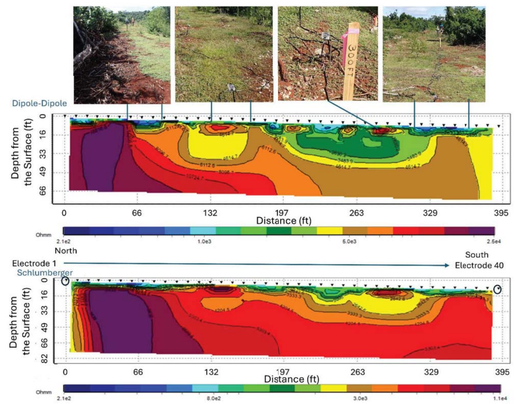

Figure 7. ERT profiles of the north boring route for dipole-dipole and Schlumberger arrays. Color scales are different for each image.

REFERENCE: 1) B. MIKLAVIC & B. KIM, "HYDROGEOLOGICAL ASSESSMENT OF THE AREA OF THE NORTH AIRCRAFT PARKING RAMP (P-012) DEVELOPMENT PLAN, ANDERSEN AFB, GUAM - ELECTRICAL RESISTIVITY TOMOGRAPHY (ERT) PROFILING", WATER AND ENVIRONMENTAL RESEARCH INSTITUTE OF THE WESTERN PACIFIC (WERI), UNIVERSITY OF GUAM, DATED 18 OCTOBER 2024.

NOTE: THE INFORMATION PRESENTED HAS BEEN REDACTED FROM THE ORIGINAL REFERENCE DOCUMENT TO REMOVE ANY PROPRIETARY INTERPRETATIONS. THE CONTENTS OF THIS SHEET ARE PROVIDED FOR INFORMATION ONLY. THE USE OR MISUSE OF THE INFORMATION PRESENTED IS THE RESPONSIBILITY OF THE CONTRACTOR. THIS SHEET MUST BE PRINTED IN COLOR.

A1 EXISTING ERT SURVEY INFORMATION
SCALE N.T.S.

SYM	DESCRIPTION	DATE
1	AMEND.0003 - ADDED SHEET	28-APR-26

NAVFAC

STATE OF MISSOURI
NICHOLAS JOSEPH KOTH
PE-2009018528
PROFESSIONAL ENGINEER
28 APR 2026
TEXAS REGISTERED ENGINEERING FIRM F-2966 SEAL

Jacobs / BURNS MCDONNELL
JACOBS/B&M, A JOINT VENTURE
1100 NORTH GLEBE ROAD
SUITE 500
ARLINGTON, VA 22201

A/E Contract No. N62742-2D-0002
A/E Task Order No. N6274221F0315
JEG NO. 03430603
A/E INFO

APPROVED
FOR COMMANDER NAVFAC DATE 4/29/2026

ACTIVITY
AFIMSC APPROVAL PER NAVFAC SAT-TO CHECKLIST

SATISFACTORY TO DATE 31 DEC 2025

DES:	JMH	DRW:	SMC	REV:	ATM
PM/DM					KKK
BRANCH MANAGER					SMK
CHIEF ENG/ARCH					SMK
FIRE PROTECTION					RO

DEPARTMENT OF THE NAVY
NAVAL FACILITIES ENGINEERING SYSTEMS COMMAND
NAVFAC PACIFIC
NAVAL FACILITIES ENGINEERING SYSTEMS COMMAND – PACIFIC
JOINT REGION MARIANAS (JRM)
ANDERSEN AIR FORCE BASE
GUAM

FY24 AJY183012 (P-012),
PDI: NORTH AIRCRAFT PARKING RAMP
EXISTING ERT SURVEY INFORMATION

SCALE: AS SHOWN
EPROJECTS NO.: 1665555
CONSTR CONTROL NO.
NAVFAC DRAWING NO. 17362005
SHEET 56.1 OF 377

BB121

IF SHEET IS LESS THAN 22" X 34" REDUCED PRINT, USE GRAPHIC SCALES

REDESIGN FINAL SUBMITTAL

FILE NAME: U:\BLDG\NAVFAC Pacific\D3430603 – P-012 North Aircraft Parking Ramp\700 Working Documents\740 Sheets\740.01 Civil\P012_1665555_BB121.dwg
LAYOUT NAME: BB121
PLOTTED: 04/28/2026 11:59am
USER: CamenoS

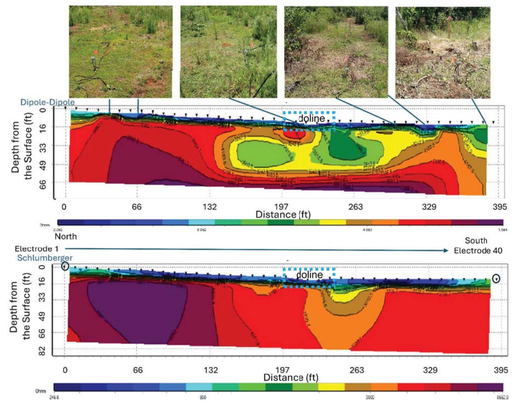

Figure 8. ERT profiles of the north karst for dipole-dipole and Schlumberger arrays. Color scales are different for each image.

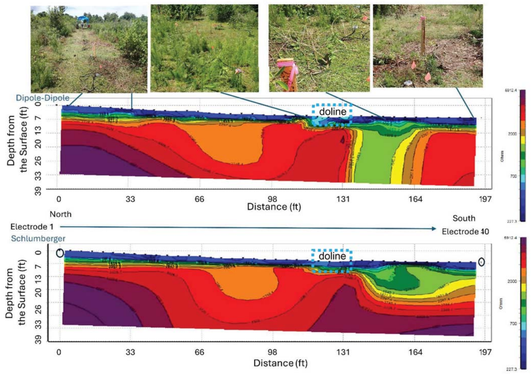

Figure 9. ERT profiles of the north karst – suspect doline area for dipole-dipole and Schlumberger arrays. The dotted blue square marks the suspect doline. The color scale is uniform on both diagrams.

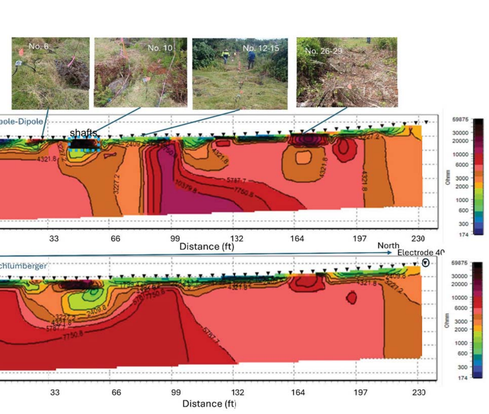

Figure 10. ERT profiles of the main south karst from south to north for dipole-dipole and Schlumberger arrays. The color scale is uniform for both diagrams.

Electrode No. 6 – about 40 ft from south to north, surrounded by rocks. Soil and shafts.

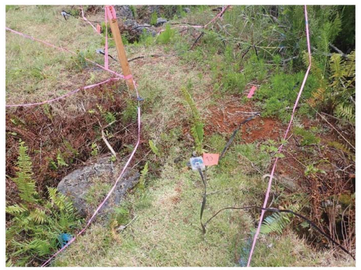

Electrode No. 10 – about 60 ft from south to north, surrounded by rocks. Soil and shafts. ERT models show very high resistivity values.

Electrode No. 12-15 – about 70 - 90 ft from south to north, a soil-filled area with shafts. ERT models predict very high resistivity area

Electrode No. 26 - 19 – about 160 - 180 ft from south to north, limestone area covered with soil. ERT models show relatively high resistivity values

A1 EXISTING ERT SURVEY INFORMATION
SCALE N.T.S.

REFERENCE: 1) B. MIKLAVIC & B. KIM, "HYDROGEOLOGICAL ASSESSMENT OF THE AREA OF THE NORTH AIRCRAFT PARKING RAMP (P-012) DEVELOPMENT PLAN, ANDERSEN AFB, GUAM - ELECTRICAL RESISTIVITY TOMOGRAPHY (ERT) PROFILING", WATER AND ENVIRONMENTAL RESEARCH INSTITUTE OF THE WESTERN PACIFIC (WERI), UNIVERSITY OF GUAM, DATED 18 OCTOBER 2024.

NOTE: THE INFORMATION PRESENTED HAS BEEN REDACTED FROM THE ORIGINAL REFERENCE DOCUMENT TO REMOVE ANY PROPRIETARY INTERPRETATIONS. THE CONTENTS OF THIS SHEET ARE PROVIDED FOR INFORMATION ONLY. THE USE OR MISUSE OF THE INFORMATION PRESENTED IS THE RESPONSIBILITY OF THE CONTRACTOR. THIS SHEET MUST BE PRINTED IN COLOR.

SYM	DESCRIPTION	DATE
1	AMEND.0003 = ADDED SHEET	28-APR-26

NAVFAC

STATE OF MISSOURI
NICHOLAS JOSEPH ROTH
NUMBER PE-2009038844
PROFESSIONAL ENGINEER
28 APR 2026
TEXAS REGISTERED ENGINEERING FIRM F-2966 SEAL

Jacobs / BURNS McDONNELL
JACOBS/B&M, A JOINT VENTURE
1100 NORTH GLEBE ROAD
SUITE 500
ARLINGTON, VA 22201

A/E Contract No. N62742-20-D-0002
A/E Task Order No. N6274221F0315
JCG NO. 0343/0603
A/E INFO

APPROVED
FOR COMMANDER NAVFAC DATE 4/29/2026

ACTIVITY
AFIMSC APPROVAL PER NAVFAC SAT-TO CHECKLIST

SATISFACTORY TO DATE 31 DEC 2025

DES:	JMH	DRW:	SMC	REV:	ATM
PM/DM					KKK
BRANCH MANAGER					SMK
CHIEF ENG/ARCH					SMK
FIRE PROTECTION					RO

DEPARTMENT OF THE NAVY
NAVAL FACILITIES ENGINEERING SYSTEMS COMMAND
NAVFAC PACIFIC
NAVAL FACILITIES ENGINEERING SYSTEMS COMMAND – PACIFIC
JOINT REGION MARIANAS (JRM)
ANDERSEN AIR FORCE BASE
GUAM

FY24 AJJY183012 (P-012);
PDI: NORTH AIRCRAFT PARKING RAMP
EXISTING ERT SURVEY INFORMATION

SCALE: AS SHOWN
EPROJECTS NO.: 1665555
CONSTR CONTROL NO.
NAVFAC DRAWING NO.: 17362006
SHEET 56.2 OF 377
BB122

REDESIGN FINAL SUBMITTAL

IF SHEET IS LESS THAN 22" X 34" REDUCED PRINT, USE GRAPHIC SCALES

FILE NAME: U:\BLDG\NAVFAC Pacific\0343060 3 – P-012 North Aircraft Parking Ramp\700 Working Documents\740 Sheets\740.01 Civil\P012_1665555_BB122.dwg
LAYOUT NAME: BB122
PLOTTED: 04/28/2026 12:02pm
USER: CamreyS

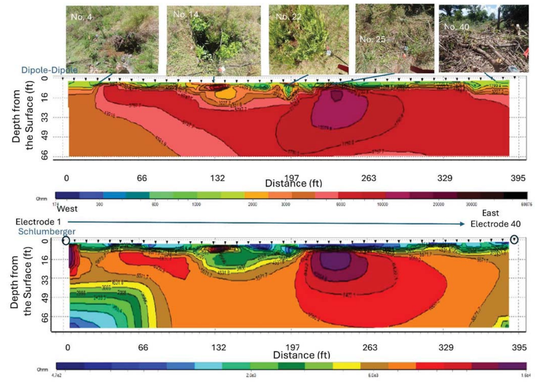

Figure 11. ERT profiles of the main south karst from west to east for dipole-dipole and Schlumberger arrays.

Electrode No. 4 – about 30 ft from west to east soil filled area wth shafts nearby.

Electrode No. 14 – about 130 ft from west to east, limestone area with shafts nearby.

Electrode No. 22 – about 210 ft from west to east, soil area with vegetation-covered shafts

Electrode No. 25 – about 240 ft from west to east, limestone area with shafts

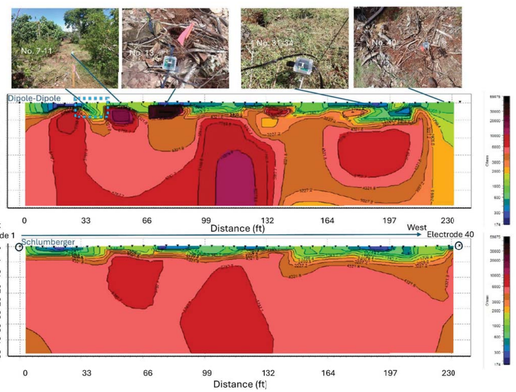

Figure 12. ERT profiles of the south karst to the west for dipole-dipole and Schlumberger arrays. The two models showing contrasting subsurface composition. The scales of both images are aligned.

Electrode No. 7-11 – about 40-70 ft from east to west.

Electrode No. 13 – about 80 ft from east to west; area characterized by small holes.

Electrode No. 31-34 – about 190-210 ft from east to west; area characterized by open holes.

A1 EXISTING ERT SURVEY INFORMATION
SCALE N.T.S.

REFERENCE: 1) B. MIKLAVIC & B. KIM, "HYDROGEOLOGICAL ASSESSMENT OF THE AREA OF THE NORTH AIRCRAFT PARKING RAMP (P-012) DEVELOPMENT PLAN, ANDERSEN AFB, GUAM - ELECTRICAL RESISTIVITY TOMOGRAPHY (ERT) PROFILING", WATER AND ENVIRONMENTAL RESEARCH INSTITUTE OF THE WESTERN PACIFIC (WERI), UNIVERSITY OF GUAM, DATED 18 OCTOBER 2024.

NOTE: THE INFORMATION PRESENTED HAS BEEN REDACTED FROM THE ORIGINAL REFERENCE DOCUMENT TO REMOVE ANY PROPRIETARY INTERPRETATIONS. THE CONTENTS OF THIS SHEET ARE PROVIDED FOR INFORMATION ONLY. THE USE OR MISUSE OF THE INFORMATION PRESENTED IS THE RESPONSIBILITY OF THE CONTRACTOR. THIS SHEET MUST BE PRINTED IN COLOR.

SYM	DESCRIPTION	DATE
1	AMEND.0003 - ADDED SHEET	28-APR-26

NAVFAC

STATE OF MISSISSIPPI
NICHOLAS JOSEPH MIKLAVIC 10TH
PE-200[illegible]2828
PROFESSIONAL ENGINEER
28 APR 2026
TEXAS REGISTERED ENGINEERING FIRM F-2966 SEAL

Jacobs / BURNS MCDONNELL
JACOBS/B&M, A JOINT VENTURE
1100 NORTH GLEBE ROAD
SUITE 500
ARLINGTON, VA 22201

A/E Contract No. N62742-20-D-0002
A/E Task Order No. N6274221F0315
JEG NO. 03430603
A/E INFO

APPROVED
FOR COMMANDER NAVFAC DATE 4/29/2026

ACTIVITY
AFIMSC APPROVAL PER NAVFAC SAT-TO CHECKLIST

SATISFACTORY TO DATE 31 DEC 2025

DES:	JMH	DRW:	SMC	REV:	ATM
PM/DM					KKK
BRANCH MANAGER					SMK
CHIEF ENG/ARCH					SMK
FIRE PROTECTION					RO

DEPARTMENT OF THE NAVY
NAVAL FACILITIES ENGINEERING SYSTEMS COMMAND
NAVFAC PACIFIC
NAVAL FACILITIES ENGINEERING SYSTEMS COMMAND – PACIFIC
JOINT REGION MARIANAS (JRM)
ANDERSEN AIR FORCE BASE
GUAM

FY24 AJY183012 (P-012),
PDI: NORTH AIRCRAFT PARKING RAMP
EXISTING ERT SURVEY INFORMATION

SCALE: AS SHOWN
EPROJECTS NO.: 1665555
CONSTR CONTROL NO.
NAVFAC DRAWING NO. 17362007
SHEET 56.3 OF 377

BB123

REDESIGN FINAL SUBMITTAL

IF SHEET IS LESS THAN 22" X 34" REDUCED PRINT, USE GRAPHIC SCALES

FILE NAME: U:\BLDG\NAVFAC Pacific\03430603 – P-012 North Aircraft Parking Ramp\700 Working Documents\740 Sheets\740.01 Civil\P012_1665555_BB123.dwg
LAYOUT NAME: BB123
PLOTTED: 04/28/2026 12:38pm
USER: CarreraS

APPENDIX 2

REFERENCE INFORMATION - ERT SURVEY

A. Site Photos of ERT electrode installation

(a) The Main South Karst Area - North

(b) The Main South Karst Area - East

(c) The South Karst Area – West

(d) North Karst Area

(e) North Boring Route

B. Coordinates of each ERT electrode.

Profiling Date	September 3, 2024					
Name	**North Boring Site**		**North Karst Site**		**North Karst depression Site**	
Direction	South 150°					
Total length	390 ft				195 ft	
Distance between each electrode	10 ft				5 ft	
Sensor No.	Latitude	Longitude	Latitude	Longitude	Latitude	Longitude
1	13.5907000	144.9103015	13.59088959	144.9108876	13.5906745	144.910938
5	13.5906101	144.9103595	13.59079322	144.9109267	13.59062536	144.9109578
10	13.5904961	144.9104182	13.59066533	144.9109762	13.59056349	144.9109817
15	13.5903690	144.9104900	13.59053356	144.9110224	13.59049636	144.9110065
20	13.5902436	144.9105670	13.59043142	144.9110638	13.59043248	144.9110374
25	13.5901307	144.9106350	13.59027933	144.9111216	13.59037056	144.9110575
30	13.5900158	144.9107078	13.59015833	144.9111673	13.590311	144.9110801
35	13.5898938	144.9107840	13.59003066	144.911215	13.59023666	144.91111
40	13.5897759	144.9108495	13.58989066	144.9112662	13.59016783	144.9111361

Profiling Date	September 4, 2024					
Name	**South Karst North**		**South Karst East**		**South Karst West**	
Direction	North 0°		East 90°		West 260°	
Total length	234 ft		390 ft		234 ft	
Distance between each electrode	6 ft		10 ft		6 ft	
Sensor No.	Latitude	Longitude	Latitude	Longitude	Latitude	Longitude
1	13.5839163	144.916171	13.5891585	144.9156713	13.58907721	144.9154204
5	13.5839705	144.916183	13.5891374 5	144.9166418	13.58906984	144.915353
10	13.5890567	144.9162034	13.58913986	144.9165081	13.58906095	144.9152683
15	13.5891 3116	144.9162186	13.58914296	144.9163678	13.5890475	144.9151795
20	13.58920983	144.9162425	13.58914606	144.9162274	13.58904074	144.9151013
25	13.58929133	144.9162593	13.58914761	144.9160807	13.58902575	144.9150128
30	13.58938194	144.9162785	13.58915226	144.9159387	13.58901337	144.9149263
35	13.58945466	144.9162965	13.58915691	144.9157968	13.589	144.9148453
40	13.5895395	144.9163158	13.58913533	144.9167623	13.58899251	144.9147754

C. Elevation of each electrode.

Site Name	Sensor Number	Elevation (m)	Difference from reference electrode (m)	Elevation (ft)	Difference from reference electrode (ft)	Note
South Karst North (elevation difference: 2.20m)	1	147.45	2.11	483.8	6.9	
	2	147.45	2.11	483.8	6.9	
	3	147.45	2.11	483.8	6.9	
	4	147.35	2.2	483.5	7.2	
	5	147.35	2.2	483.5	7.2	
	6	147.35	2.2	483.5	7.2	
	7	147.35	2.2	483.5	7.2	
	8	147.35	2.2	483.5	7.2	
	9	147.35	2.2	483.5	7.2	
	10	147.35	2.21	483.5	7.2	
	11	147.41	2.15	483.6	7	
	12	147.47	2.09	483.8	6.8	
	13	147.53	2.03	484	6.7	
	14	147.59	1.97	484.2	6.5	
	15	147.66	1.89	484.5	6.2	
	16	147.66	1.89	484.5	6.2	
	17	147.66	1.89	484.5	6.2	
	18	147.66	1.89	484.5	6.2	
	19	147.65	1.9	484.4	6.2	
	20	147.65	1.9	484.4	6.2	
	21	147.7	1.85	484.6	6.1	
	22	147.75	1.8	484.8	5.9	
	23	147.8	1.75	484.9	5.8	
	24	147.85	1.7	485.1	5.6	
	25	147.93	1.63	485.4	5.3	
	26	148	1.56	485.6	5.1	
	27	148.07	1.49	485.8	4.9	
	28	148.14	1.42	486	4.6	
	29	148.21	1.35	486.3	4.4	
	30	148.31	1.24	486.6	4.1	
	31	148.41	1.14	486.9	3.8	
	32	148.51	1.04	487.3	3.4	
	33	148.61	0.94	487.6	3.1	
	34	148.71	0.84	487.9	2.8	
	35	148.85	0.71	488.4	2.3	
	36	148.99	0.57	488.8	1.9	
	37	149.13	0.43	489.3	1.4	
	38	149.27	0.29	489.7	0.9	
	39	149.41	0.15	490.2	0.5	
	40	149.56	0	490.7	0	Reference elevation

Site Name	Sensor Number	Elevation (m)	Difference from reference electrode (m)	Elevation (ft)	Difference from reference electrode (ft)	Note
South Karst East (elevation difference: 0.83m)	1	148.08	0.26	485.8	0.9	
	2	148.04	0.3	485.7	1	
	3	148	0.34	485.6	1.1	
	4	147.96	0.38	485.4	1.3	
	5	147.91	0.42	485.3	1.4	
	6	147.85	0.48	485.1	1.6	
	7	147.79	0.54	484.9	1.8	
	8	147.73	0.6	484.7	2	
	9	147.67	0.66	484.5	2.2	
	10	147.6	0.74	484.3	2.4	
	11	147.58	0.76	484.2	2.5	
	12	147.56	0.78	484.1	2.6	
	13	147.54	0.8	484.1	2.6	
	14	147.52	0.82	484	2.7	
	15	147.5	0.84	483.9	2.8	
	16	147.51	0.83	484	2.7	
	17	147.52	0.82	484	2.7	
	18	147.53	0.81	484	2.7	
	19	147.54	0.8	484.1	2.6	
	20	147.6	0.74	484.3	2.4	
	21	147.62	0.72	484.3	2.4	
	22	147.63	0.71	484.4	2.3	
	23	147.65	0.69	484.4	2.3	
	24	147.67	0.67	484.5	2.2	
	25	147.69	0.65	484.6	2.1	
	26	147.72	0.62	484.7	2	
	27	147.75	0.59	484.8	1.9	
	28	147.78	0.56	484.9	1.8	
	29	147.81	0.53	485	1.7	
	30	147.85	0.49	485.1	1.6	
	31	147.88	0.46	485.2	1.5	
	32	147.91	0.43	485.3	1.4	
	33	147.94	0.4	485.4	1.3	
	34	147.97	0.37	485.5	1.2	
	35	148.01	0.33	485.6	1.1	
	36	148.07	0.27	485.8	0.9	
	37	148.13	0.21	486	0.7	
	38	148.2	0.14	486.2	0.5	
	39	148.27	0.07	486.5	0.2	
	40	148.34	0	486.7	0	Reference elevation

Site Name	Sensor Number	Elevation (m)	Difference from reference electrode (m)	Elevation (ft)	Difference from reference electrode (ft)	Note
South Karst West (elevation difference: -0.08 ~ 0.10m)	1	148.06	0	485.8	0	Reference elevation
	2	148.08	-0.03	485.9	-0.1	
	3	148.11	-0.05	485.9	-0.2	
	4	148.13	-0.08	486	-0.2	
	5	148.16	-0.1	486.1	-0.3	
	6	148.13	-0.08	486	-0.3	
	7	148.11	-0.05	485.9	-0.2	
	8	148.09	-0.03	485.9	-0.1	
	9	148.06	-0.01	485.8	0	
	10	148.03	0.02	485.7	0.1	
	11	148.02	0.04	485.7	0.1	
	12	148.01	0.05	485.6	0.2	
	13	147.99	0.06	485.6	0.2	
	14	147.98	0.08	485.5	0.2	
	15	147.96	0.09	485.5	0.3	
	16	147.98	0.08	485.5	0.2	
	17	148	0.06	485.6	0.2	
	18	148.01	0.04	485.6	0.1	
	19	148.03	0.02	485.7	0.1	
	20	148.05	0.01	485.8	0	
	21	148.05	0.01	485.8	0	
	22	148.05	0.01	485.8	0	
	23	148.04	0.02	485.7	0.1	
	24	148.04	0.02	485.7	0.1	
	25	148.04	0.02	485.7	0.1	
	26	148.04	0.02	485.7	0.1	
	27	148.04	0.02	485.7	0.1	
	28	148.04	0.02	485.7	0.1	
	29	148.04	0.02	485.7	0.1	
	30	148.04	0.01	485.7	0	
	31	148.05	0	485.8	0	
	32	148.06	-0.01	485.8	0	
	33	148.07	-0.02	485.8	-0.1	
	34	148.08	-0.03	485.9	-0.1	
	35	148.11	-0.05	485.9	-0.2	
	36	148.08	-0.03	485.9	-0.1	
	37	148.05	0	485.8	0	
	38	148.03	0.03	485.7	0.1	
	39	148	0.06	485.6	0.2	
	40	147.97	0.08	485.5	0.3	

Site Name	Sensor Number	Elevation (m)	Difference from reference electrode (m)	Elevation (ft)	Difference from reference electrode (ft)	Note
North Karst Area (elevation difference: 3.83m)	1	148.65	0	487.7	0	Reference elevation
	2	148.47	0.18	487.1	0.6	
	3	148.29	0.36	486.5	1.2	
	4	148.11	0.54	486	1.8	
	5	147.94	0.72	485.4	2.4	
	6	147.78	0.88	484.9	2.9	
	7	147.94	0.72	485.4	2.4	
	8	147.78	0.88	484.9	2.9	
	9	147.62	1.04	484.3	3.4	
	10	147.12	1.53	482.7	5	
	11	146.96	1.69	482.2	5.5	
	12	146.8	1.85	481.7	6.1	
	13	146.64	2.01	481.1	6.6	
	14	146.48	2.17	480.6	7.1	
	15	146.29	2.37	480	7.8	
	16	146.18	2.48	479.6	8.1	
	17	146.07	2.59	479.2	8.5	
	18	145.96	2.7	478.9	8.8	
	19	145.85	2.81	478.5	9.2	
	20	145.71	2.94	478.1	9.6	
	21	145.6	3.05	477.7	10	
	22	144.49	4.16	474.1	13.6	Depression
	23	143.38	5.27	470.4	17.3	Depression
	24	143.38	5.27	470.4	17.3	Depression
	25	145.15	3.51	476.2	11.5	
	26	145.1	3.56	476.1	11.7	
	27	145.05	3.61	475.9	11.8	
	28	145	3.66	475.7	12	
	29	144.95	3.71	475.6	12.2	
	30	144.85	3.8	475.3	12.5	
	31	144.84	3.81	475.2	12.5	
	32	144.83	3.82	475.2	12.5	
	33	144.82	3.83	475.2	12.6	
	34	144.81	3.84	475.1	12.6	
	35	144.81	3.84	475.1	12.6	
	36	144.81	3.84	475.1	12.6	
	37	144.82	3.83	475.2	12.6	
	38	144.82	3.83	475.2	12.6	
	39	144.83	3.82	475.2	12.5	
	40	144.83	3.83	475.2	12.6	

REFERENCE: 1) B. MIKLAVIC & B. KIM, "HYDROGEOLOGICAL ASSESSMENT OF THE AREA OF THE NORTH AIRCRAFT PARKING RAMP (P-012) DEVELOPMENT PLAN, ANDERSEN AFB, GUAM - ELECTRICAL RESISTIVITY TOMOGRAPHY (ERT) PROFILING", WATER AND ENVIRONMENTAL RESEARCH INSTITUTE OF THE WESTERN PACIFIC (WERI), UNIVERSITY OF GUAM, DATED 18 OCTOBER 2024.

NOTE: THE INFORMATION PRESENTED HAS BEEN REDACTED FROM THE ORIGINAL REFERENCE DOCUMENT TO REMOVE ANY PROPRIETARY INTERPRETATIONS. THE CONTENTS OF THIS SHEET ARE PROVIDED FOR INFORMATION ONLY. THE USE OR MISUSE OF THE INFORMATION PRESENTED IS THE RESPONSIBILITY OF THE CONTRACTOR. THIS SHEET MUST BE PRINTED IN COLOR.

A1 EXISTING ERT SURVEY INFORMATION
SCALE N.T.S.

SYM	DESCRIPTION	DATE
1	AMEND.0003 - ADDED SHEET	28-APR-26

NAVFAC

STATE OF MISSOURI
NICHOLAS JOSEPH KOTTAS
PE-2009002828
PROFESSIONAL ENGINEER
28 APR 2026
TEXAS REGISTERED ENGINEERING FIRM F-2966 SEAL

Jacobs / BURNS McDONNELL
JACOBS/B&M, A JOINT VENTURE
1100 NORTH GLEBE ROAD
SUITE 500
ARLINGTON, VA 22201
A/E Contract No. N62742-20-D-0002
A/E Task Order No. N6274221F0315
JEG NO. 03430603
A/E INFO

APPROVED
FOR COMMANDER NAVFAC DATE 4/29/2026

ACTIVITY
AFIMSC APPROVAL PER NAVFAC SAT-TO CHECKLIST

SATISFACTORY TO DATE 31 DEC 2025

DES:	JMH	DRW:	SMC	REV:	ATM
PM/DM					KKK
BRANCH MANAGER					SMK
CHIEF ENG/ARCH					SMK
FIRE PROTECTION					RO

DEPARTMENT OF THE NAVY
NAVAL FACILITIES ENGINEERING SYSTEMS COMMAND
NAVFAC PACIFIC
NAVAL FACILITIES ENGINEERING SYSTEMS COMMAND – PACIFIC
JOINT REGION MARIANAS (JRM)
ANDERSEN AIR FORCE BASE
GUAM

FY24 AJY183012 (P-012),
PDI: NORTH AIRCRAFT PARKING RAMP
EXISTING ERT SURVEY INFORMATION

SCALE: AS SHOWN
EPROJECTS NO.: 1665555
CONSTR CONTROL NO.
NAVFAC DRAWING NO. 17362008
SHEET 56.4 OF 377
BB124

IF SHEET IS LESS THAN 22" X 34" REDUCED PRINT. USE GRAPHIC SCALES

REDESIGN FINAL SUBMITTAL

FILE NAME: U:\BLDG\NAVFAC Pacific\03430603 – P-012 North Aircraft Parking Ramp\700 Working Documents\740 Sheets\740.01 Civil\P012_1665555_BB124.dwg
LAYOUT NAME: BB124
PLOTTED: 04/28/2026 12:42pm
USER: CamerAS

Site Name	Sensor Number	Elevation (m)	Difference from reference electrode (m)	Elevation (ft)	Difference from reference electrode (ft)	Note
North Karst Area - the Main Depression Area (elevation difference: 2.32m)	1	147.15	0	482.8	0	Reference elevation
	2	147.08	0.07	482.6	0.2	
	3	147.01	0.14	482.4	0.5	
	4	146.94	0.21	482.1	0.7	
	5	146.86	0.29	481.8	1	
	6	146.77	0.38	481.6	1.3	
	7	146.68	0.47	481.3	1.6	
	8	146.59	0.56	481	1.9	
	9	146.5	0.65	480.7	2.1	
	10	146.41	0.74	480.4	2.4	
	11	146.33	0.82	480.1	2.7	
	12	146.25	0.9	479.8	3	
	13	146.33	0.82	480.1	2.7	
	14	146.25	0.9	479.8	3	
	15	146	1.15	479	3.8	
	16	145.94	1.21	478.8	4	
	17	145.88	1.27	478.6	4.2	
	18	145.94	1.21	478.8	4	
	19	145.88	1.27	478.6	4.2	
	20	145.71	1.44	478.1	4.7	
	21	145.7	1.45	478	4.8	
	22	145.69	1.46	478	4.8	
	23	145.67	1.48	477.9	4.9	
	24	145.63	1.52	477.8	5	
	25	145.48	1.68	477.3	5.5	Depression
	26	145.44	1.72	477.2	5.6	Depression
	27	145.38	1.78	477	5.8	Depression
	28	145.32	1.84	476.8	6	
	29	145.26	1.9	476.6	6.2	
	30	145.17	1.98	476.3	6.5	
	31	145.15	2	476.3	6.6	
	32	145.13	2.02	476.2	6.6	
	33	145.11	2.04	476.1	6.7	
	34	145.09	2.06	476.1	6.8	
	35	145.04	2.11	475.9	6.9	
	36	145	2.15	475.8	7.1	
	37	144.96	2.19	475.6	7.2	
	38	144.92	2.23	475.5	7.3	
	39	144.88	2.27	475.4	7.5	
	40	144.84	2.32	475.2	7.6	

Site Name	Sensor Number	Elevation (m)	Difference from reference electrode (m)	Elevation (ft)	Difference from reference electrode (ft)	Note
North Boring Route (elevation difference: 2.71m)	1	147.92	0	485.3	0	Reference elevation
	2	147.87	0.05	485.2	0.2	
	3	147.82	0.1	485	0.3	
	4	147.77	0.15	484.8	0.5	
	5	147.73	0.19	484.7	0.6	
	6	147.66	0.26	484.5	0.9	
	7	147.59	0.33	484.2	1.1	
	8	147.52	0.4	484	1.3	
	9	147.45	0.47	483.8	1.6	
	10	147.36	0.56	483.5	1.8	
	11	147.32	0.6	483.4	2	
	12	147.28	0.64	483.2	2.1	
	13	147.24	0.68	483.1	2.2	
	14	147.2	0.72	483	2.4	
	15	147.16	0.76	482.8	2.5	
	16	147.07	0.85	482.5	2.8	
	17	146.98	0.94	482.2	3.1	
	18	146.89	1.03	481.9	3.4	
	19	146.8	1.12	481.6	3.7	
	20	146.67	1.25	481.2	4.1	
	21	146.6	1.32	481	4.3	
	22	146.53	1.39	480.8	4.6	
	23	146.46	1.46	480.5	4.8	
	24	146.39	1.53	480.3	5	
	25	146.29	1.63	480	5.3	
	26	146.2	1.72	479.7	5.6	
	27	146.11	1.81	479.4	5.9	
	28	146.02	1.9	479.1	6.2	
	29	145.93	1.99	478.8	6.5	
	30	145.84	2.08	478.5	6.8	
	31	145.77	2.15	478.3	7.1	
	32	145.7	2.22	478	7.3	
	33	145.63	2.29	477.8	7.5	
	34	145.56	2.36	477.6	7.8	
	35	145.45	2.48	477.2	8.1	
	36	145.41	2.52	477.1	8.3	
	37	145.37	2.56	476.9	8.4	
	38	145.33	2.6	476.8	8.5	
	39	145.37	2.56	476.9	8.4	
	40	145.22	2.71	476.5	8.9	

A1 EXISTING ERT SURVEY INFORMATION
SCALE N.T.S.

REFERENCE: 1) B. MIKLAVIC & B. KIM, "HYDROGEOLOGICAL ASSESSMENT OF THE AREA OF THE NORTH AIRCRAFT PARKING RAMP (P-012) DEVELOPMENT PLAN, ANDERSEN AFB, GUAM - ELECTRICAL RESISTIVITY TOMOGRAPHY (ERT) PROFILING", WATER AND ENVIRONMENTAL RESEARCH INSTITUTE OF THE WESTERN PACIFIC (WERI), UNIVERSITY OF GUAM, DATED 18 OCTOBER 2024.

NOTE: THE INFORMATION PRESENTED HAS BEEN REDACTED FROM THE ORIGINAL REFERENCE DOCUMENT TO REMOVE ANY PROPRIETARY INTERPRETATIONS. THE CONTENTS OF THIS SHEET ARE PROVIDED FOR INFORMATION ONLY. THE USE OR MISUSE OF THE INFORMATION PRESENTED IS THE RESPONSIBILITY OF THE CONTRACTOR. THIS SHEET MUST BE PRINTED IN COLOR.

SYM	DESCRIPTION	DATE
1	AMEND.0003 - ADDED SHEET	28-APR-26

NAVFAC

NICHOLAS JOSEPH ACOTTA
NUMBER
PE-2007020528
STATE OF MISSOURI
PROFESSIONAL ENGINEER
28 APR 2026
TEXAS REGISTERED ENGINEERING FIRM F-2966 SEAL

Jacobs / BURNS MCDONNELL
JACOBS/B&M, A JOINT VENTURE
1100 NORTH GLEBE ROAD
SUITE 500
ARLINGTON, VA 22201

A/E Contract No. N62742-20-D-0002
A/E Task Order No. N6274221F0315
JCG NO. 03430603
A/E INFO

APPROVED
FOR COMMANDER NAVFAC DATE 4/29/2026

ACTIVITY
AFIMSC APPROVAL PER NAVFAC SAT-TO CHECKLIST

SATISFACTORY TO DATE 31 DEC 2025

DES: JMH | DRW: SMC | REV: ATM
PM/DM KKK
BRANCH MANAGER SMK
CHIEF ENG/ARCH SMK
FIRE PROTECTION RO

DEPARTMENT OF THE NAVY
NAVAL FACILITIES ENGINEERING SYSTEMS COMMAND
NAVFAC PACIFIC
NAVAL FACILITIES ENGINEERING SYSTEMS COMMAND – PACIFIC
JOINT REGION MARIANAS (JRM)
ANDERSEN AIR FORCE BASE
GUAM

FY24 AJY183012 (P-012),
PDI: NORTH AIRCRAFT PARKING RAMP
EXISTING ERT SURVEY INFORMATION

SCALE: AS SHOWN
EPROJECTS NO.: 1665555
CONSTR CONTROL NO.
NAVFAC DRAWING NO. 17362009
SHEET 56.5 OF 377

BB125

IF SHEET IS LESS THAN 22" X 34" REDUCED PRINT, USE GRAPHIC SCALES

REDESIGN FINAL SUBMITTAL

FILE NAME: U:\BLDG\NAVFAC Pacific\03430603 – P-012 North Aircraft Parking Ramp\700 Working Documents\740 Sheets\740.01 Civil\P012_1665555_BB125.dwg
LAYOUT NAME: BB125
PLOTTED: 04/28/2026 12:49pm
USER: CamenoS

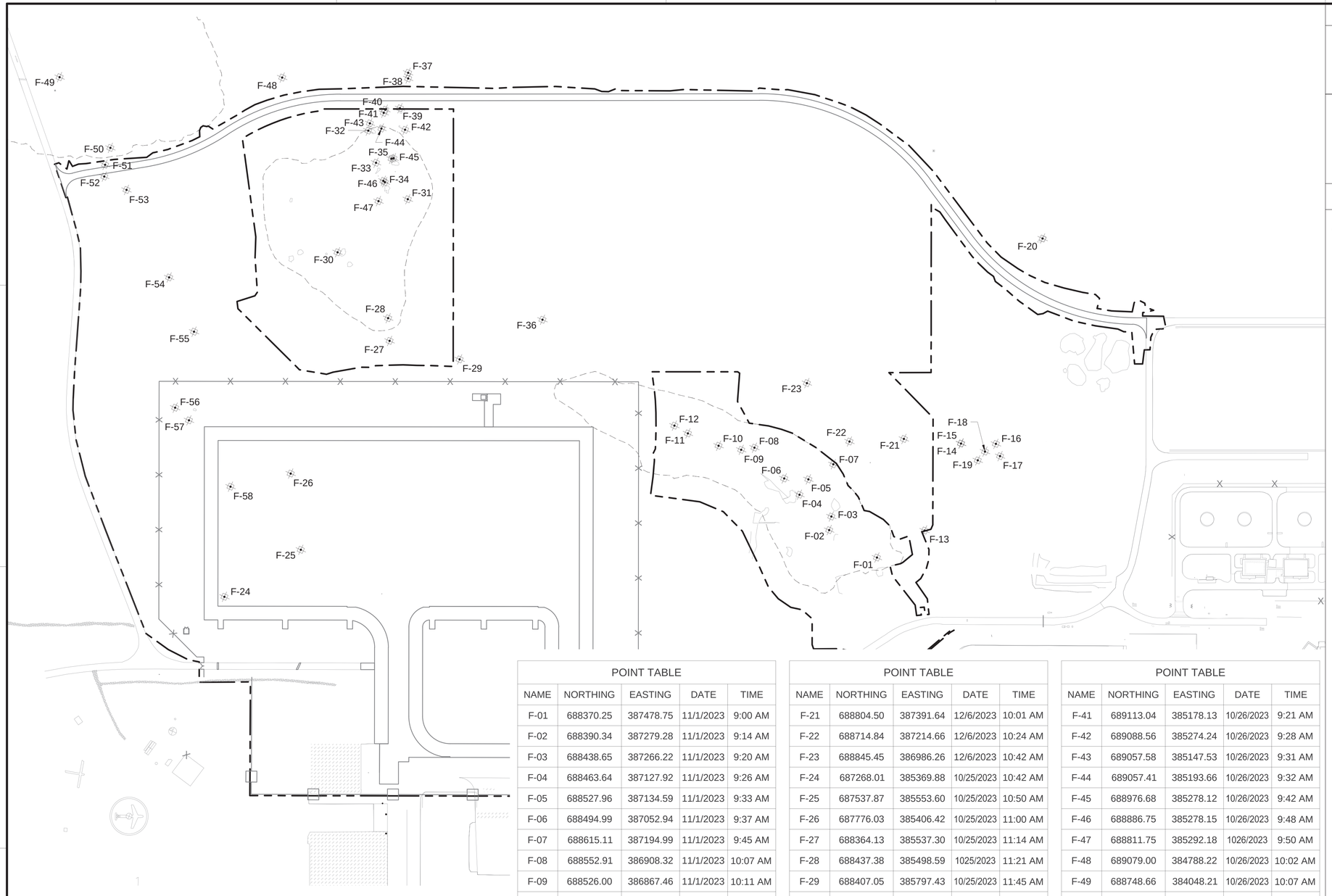

GENERAL NOTES

A	REFERENCE: 1) B. MIKLAVIC & N. HABANA, "HYDROGEOLOGICAL ASSESSMENT OF THE AREA OF THE NORTH AIRCRAFT PARKING RAMP (P-012) DEVELOPMENT PLAN, ANDERSEN AFB, GUAM", WATER AND ENVIRONMENTAL RESEARCH INSTITUTE OF THE WESTERN PACIFIC (WERI), UNIVERSITY OF GUAM, DATED 20 FEBRUARY 2024.
B	THE COORDINATES FOR THE LOCATIONS OF POTENTIAL KARST FEATURES SHOWN ON THE PLAN AND TABLES ARE APPROXIMATE, AND WERE RECORDED BY WERI DURING THEIR FIELD VISITS ON THE DATES AND TIMES SHOWN. THE CONTENTS OF THIS SHEET ARE PROVIDED FOR INFORMATION ONLY. THE USE OR MISUSE OF THE INFORMATION PRESENTED IS THE RESPONSIBILITY OF THE CONTRACTOR.

LEGEND

- LIMITS OF DISTURBANCE
- SINKHOLE
- SECURITY FENCE
- POTENTIAL KARST FEATURE

A1 APPROXIMATE LOCATIONS OF POTENTIAL KARST FEATURES
SCALE: 1" = 200'

POINT TABLE

NAME	NORTHING	EASTING	DATE	TIME
F-01	688370.25	387478.75	11/1/2023	9:00 AM
F-02	688390.34	387279.28	11/1/2023	9:14 AM
F-03	688438.65	387266.22	11/1/2023	9:20 AM
F-04	688463.64	387127.92	11/1/2023	9:26 AM
F-05	688527.96	387134.59	11/1/2023	9:33 AM
F-06	688494.99	387052.94	11/1/2023	9:37 AM
F-07	688615.11	387194.99	11/1/2023	9:45 AM
F-08	688552.91	386908.32	11/1/2023	10:07 AM
F-09	688526.00	386867.46	11/1/2023	10:11 AM
F-10	688505.82	386786.21	11/1/2023	10:13 AM
F-11	688501.14	386666.04	11/1/2023	10:25 AM
F-12	688506.83	386609.56	11/1/2023	10:30 AM
F-13	688531.04	387596.98	12/6/2023	8:33 AM
F-14	688874.34	387588.21	12/6/2023	8:47 AM
F-15	688874.34	387588.21	12/6/2023	9:00 AM
F-16	688925.10	387704.62	12/6/2023	9:05 AM
F-17	688890.62	387736.68	12/6/2023	9:08 AM
F-18	688883.15	387679.79	12/6/2023	9:10 AM
F-19	688843.34	387668.92	12/6/2023	9:14 AM
F-20	689676.90	387553.92	12/6/2023	9:50 AM

POINT TABLE

NAME	NORTHING	EASTING	DATE	TIME
F-21	688804.50	387391.64	12/6/2023	10:01 AM
F-22	688714.84	387214.66	12/6/2023	10:24 AM
F-23	688845.45	386986.26	12/6/2023	10:42 AM
F-24	687268.01	385369.88	10/25/2023	10:42 AM
F-25	687537.87	385553.60	10/25/2023	10:50 AM
F-26	687776.03	385406.42	10/25/2023	11:00 AM
F-27	688364.13	385537.30	10/25/2023	11:14 AM
F-28	688437.38	385498.59	1025/2023	11:21 AM
F-29	688407.05	385797.43	10/25/2023	11:45 AM
F-30	688580.93	385232.34	10/25/2023	11:52 AM
F-31	688861.86	385386.77	10/25/2023	12:10 PM
F-32	689030.87	385153.16	10/25/2023	12:23 PM
F-33	688935.56	385226.83	10/25/2023	12:23 PM
F-34	688884.16	385284.94	10/25/2023	12:32 PM
F-35	688971.95	385272.38	10/25/2023	12:36 PM
F-36	688662.17	386013.64	10/25/2023	13:08 PM
F-37	689282.22	385199.49	10/26/2023	9:01 AM
F-38	689263.55	385208.00	10/26/2023	9:04 AM
F-39	689152.35	385225.12	10/26/2023	9:11 AM
F-40	689125.83	385178.54	10/26/2023	9:15 AM

POINT TABLE

NAME	NORTHING	EASTING	DATE	TIME
F-41	689113.04	385178.13	10/26/2023	9:21 AM
F-42	689088.56	385274.24	10/26/2023	9:28 AM
F-43	689057.58	385147.53	10/26/2023	9:31 AM
F-44	689057.41	385193.66	10/26/2023	9:32 AM
F-45	688976.68	385278.12	10/26/2023	9:42 AM
F-46	688886.75	385278.15	10/26/2023	9:48 AM
F-47	688811.75	385292.18	1026/2023	9:50 AM
F-48	689079.00	384788.22	10/26/2023	10:02 AM
F-49	688748.66	384048.21	10/26/2023	10:07 AM
F-50	688589.36	384322.27	10/26/2023	10:23 AM
F-51	688525.36	384329.90	10/26/2023	10:27 AM
F-52	688485.09	384344.77	10/26/2023	10:30 AM
F-53	688473.78	384438.42	10/26/2023	10:38 AM
F-54	688246.50	384710.45	10/26/2023	10:49 AM
F-55	688103.33	384874.06	10/26/2023	11:06 AM
F-56	687822.75	384924.54	10/26/2023	11:07 AM
F-57	687801.31	384989.19	10/26/2023	11:08 AM
F-58	687642.88	385226.06	10/26/2023	11:13 AM

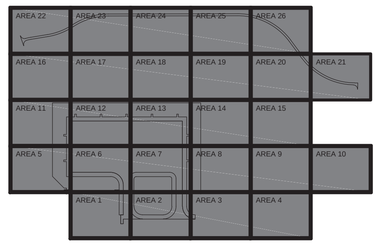

OVERALL
KEY PLAN

GRAPHIC SCALE
0 100' 200' 400'
SCALE: 1"=200'

NORTH ARROW
TRUE N

SYM	DESCRIPTION	DATE
1	AMEND.0003 - ADDED SHEET	28-APR-26

NAVFAC

STATE OF MISSISSIPPI
NICHOLAS JOSEPH JOTH
PE-20074042828
PROFESSIONAL ENGINEER
28 APR 2026
TEXAS REGISTERED ENGINEERING FIRM F-2966 SEAL

Jacobs / BURNS McDONNELL
JACOBS/B&M, A JOINT VENTURE
1100 NORTH GLEBE ROAD
SUITE 500
ARLINGTON, VA 22201
A/E Contract No. N62742-20-D-0002
A/E Task Order No. N6274221F0315
JEG NO. 034306O3
A/E INFO

APPROVED
FOR COMMANDER NAVFAC DATE 4/29/2026

ACTIVITY
AFIMSC APPROVAL PER NAVFAC SAT-TO CHECKLIST

SATISFACTORY TO DATE 31 DEC 2025

DES:	JMH	DRW:	SMC	REV:	ATM
PM/DM					KKK
BRANCH MANAGER					SMK
CHIEF ENG/ARCH					SMK
FIRE PROTECTION					RO

DEPARTMENT OF THE NAVY
NAVAL FACILITIES ENGINEERING SYSTEMS COMMAND
NAVFAC PACIFIC
NAVAL FACILITIES ENGINEERING SYSTEMS COMMAND – PACIFIC
JOINT REGION MARIANAS (JRM)
ANDERSEN AIR FORCE BASE
GUAM

FY24 AJJY183012 (P-012),
PDI: NORTH AIRCRAFT PARKING RAMP

APPROXIMATE LOCATIONS OF POTENTIAL KARST FEATURES

SCALE: AS SHOWN
EPROJECTS NO.: 1665555
CONSTR CONTROL NO.
NAVFAC DRAWING NO. 17362010
SHEET 56.6 OF 377

BB126

REDESIGN FINAL SUBMITTAL

IF SHEET IS LESS THAN 22" X 34" REDUCED PRINT, USE GRAPHIC SCALES

FILE NAME: U:\BLDG\NAVFAC Pacific\D3430603 – P-012 North Aircraft Parking Ramp\700 Working Documents\740 Sheets\740.01 Civil\P012_1665555_BB126.dwg
LAYOUT NAME: BB126
PLOTTED: 04/28/2026 12:53pm
USER: CamenoS

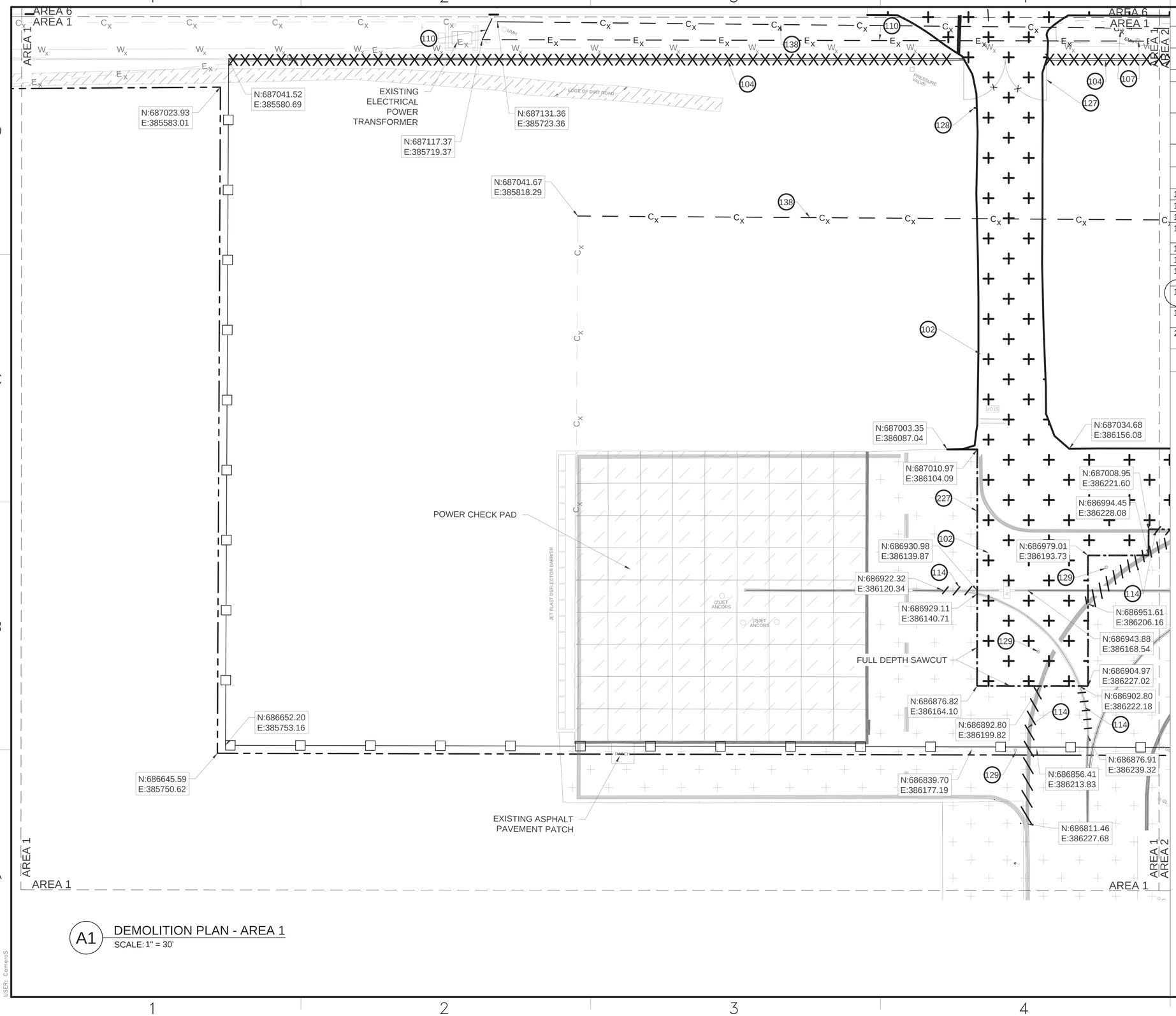

A1 DEMOLITION PLAN - AREA 1
SCALE: 1" = 30'

GENERAL NOTES

A	EXISTING IMPROVEMENTS NOT SHOWN REMOVED ON DEMOLITION PLAN SHEETS MUST BE PROTECTED IN PLACE.
B	SAW CUT A STRAIGHT EDGE ALONG EXISTING ASPHALT PAVEMENT FOR INSTALLATION OF NEW PAVEMENT.
C	PROTECT EXISTING EDGES OF PAVEMENT TO REMAIN.
D	EXISTING SECURITY FENCE MUST REMAIN IN PLACE UNTIL TEMPORARY OR PERMANENT FENCING IS INSTALLED AND ACCEPTED. THE AIRFIELD MUST BE SECURE AT ALL TIMES.
E	COMPLY WITH ENVIRONMENTAL REQUIREMENTS AND REGULATIONS. REFER TO DIVISIONS 01 AND 02 SPECIFICATIONS. 1
F	FOR BIDDING PURPOSES, ASSUME THE THICKNESS OF THE EXISTING ASPHALT IS 6-INCHES.

KEYNOTES

102	REMOVE EXISTING ASPHALT PAVEMENT
104	REMOVE EXISTING CONCRETE WALL
107	REMOVE EXISTING ELECTRICAL MANHOLE
110	REMOVE EXISTING UNDERGROUND ELECTRIC, RE: ED101 & ED102
114	REMOVE EXISTING PAVEMENT MARKING
127	REMOVE EXISTING GATE
128	REMOVE EXISTING GATE KEYPAD AND ASSOCIATED CABLE/CONDUIT 2
129	REMOVE EXISTING TAXIWAY EDGE LIGHT AND BASE CAN, RE: ED101
138	REMOVE EXISTING UNDERGROUND COMM LINE, RE: TD101 & TD102
227	RECONSTRUCT EXIST ASPHALT EDGE BEFORE TYING INTO NEW PAVEMENT EDGE, RE: A3/CS502

LEGEND

- REMOVE ASPHALT PAVEMENT
- EXISTING CONCRETE PAVEMENT TO REMAIN
- EXISTING ASPHALT PAVEMENT TO REMAIN
- EXISTING DIRT ROAD
- LIMITS OF DISTURBANCE
- REMOVE EXISTING CONCRETE WALL
- REMOVE EXISTING PAVEMENT MARKING
- FULL DEPTH SAWCUT
- C_X REMOVE EXISTING UNDERGROUND COMM LINE, RE: TD101 & TD102
- E_X REMOVE EXISTING UNDERGROUND ELECTRIC, RE: ED101 & ED102
- EXISTING CONCRETE WALL TO REMAIN
- W_X EXISTING WATERLINE TO REMAIN
- E_X EXISTING UNDERGROUND ELECTRIC TO REMAIN
- EXISTING PAVEMENT MARKING TO REMAIN
- C_X EXISTING UNDERGROUND COMM LINE TO REMAIN
- TEMPORARY FENCE (FREE ZONE BOUNDARY), RE: A1/CS506

AREA 1
KEY PLAN

GRAPHIC SCALE
0 15' 30' 60'
SCALE: 1"=30'

NORTH ARROW
TRUE N

IF SHEET IS LESS THAN 22" X 34" REDUCED PRINT. USE GRAPHIC SCALES

SYM	DESCRIPTION	DATE
2	AMEND.0003 - REVISED KEYNOTE	17-APR-26
1	AMEND.0002 - ADDED NOTE	10-MAR-26

NAVFAC

STATE OF TEXAS
JENNIFER M. HAYNES
90167
LICENSED
PROFESSIONAL ENGINEER
4/16/2026
TEXAS REGISTERED ENGINEERING FIRM F-2966 SEAL

Jacobs / BURNS McDONNELL
JACOBS/B&M, A JOINT VENTURE
1100 NORTH GLEBE ROAD
SUITE 500
ARLINGTON, VA 22201
A/E Contract No. N62742-20-D-0002
A/E Task Order No. N6274221F0315
JEG NO. 0343/0603
A/E INFO

APPROVED
FOR COMMANDER NAVFAC DATE 4/29/2026

ACTIVITY
AFIMSC APPROVAL PER NAVFAC SAT-TO CHECKLIST

SATISFACTORY TO DATE	31 DEC 2025
DES: JMH	DRW: SMC REV: ATM
PM/DM	KKK
BRANCH MANAGER	SMK
CHIEF ENG/ARCH	SMK
FIRE PROTECTION	RO

DEPARTMENT OF THE NAVY
NAVFAC PACIFIC
NAVAL FACILITIES ENGINEERING SYSTEMS COMMAND
NAVAL FACILITIES ENGINEERING SYSTEMS COMMAND – PACIFIC
JOINT REGION MARIANAS (JRM)
ANDERSEN AIR FORCE BASE
GUAM

FY24 AJJY183012 (P-012),
PDI: NORTH AIRCRAFT PARKING RAMP

DEMOLITION PLAN - AREA 1

SCALE:	AS SHOWN
EPROJECTS NO.:	1665555
CONSTR CONTROL NO.	
NAVFAC DRAWING NO.	17361682
SHEET	59 OF 377

CD102

REDESIGN FINAL SUBMITTAL

FILE NAME: U:\BLDG\NAVFAC Pacific\D3430603 – P-012 North Aircraft Parking Ramp\700 Working Documents\740 Sheets\740.01 Civil\P012_1665555_CD102.dwg
LAYOUT NAME: DEMOLITION PLAN – AREA 1
PLOTTED: 04/15/2026 3:22pm
USER: CamerOS

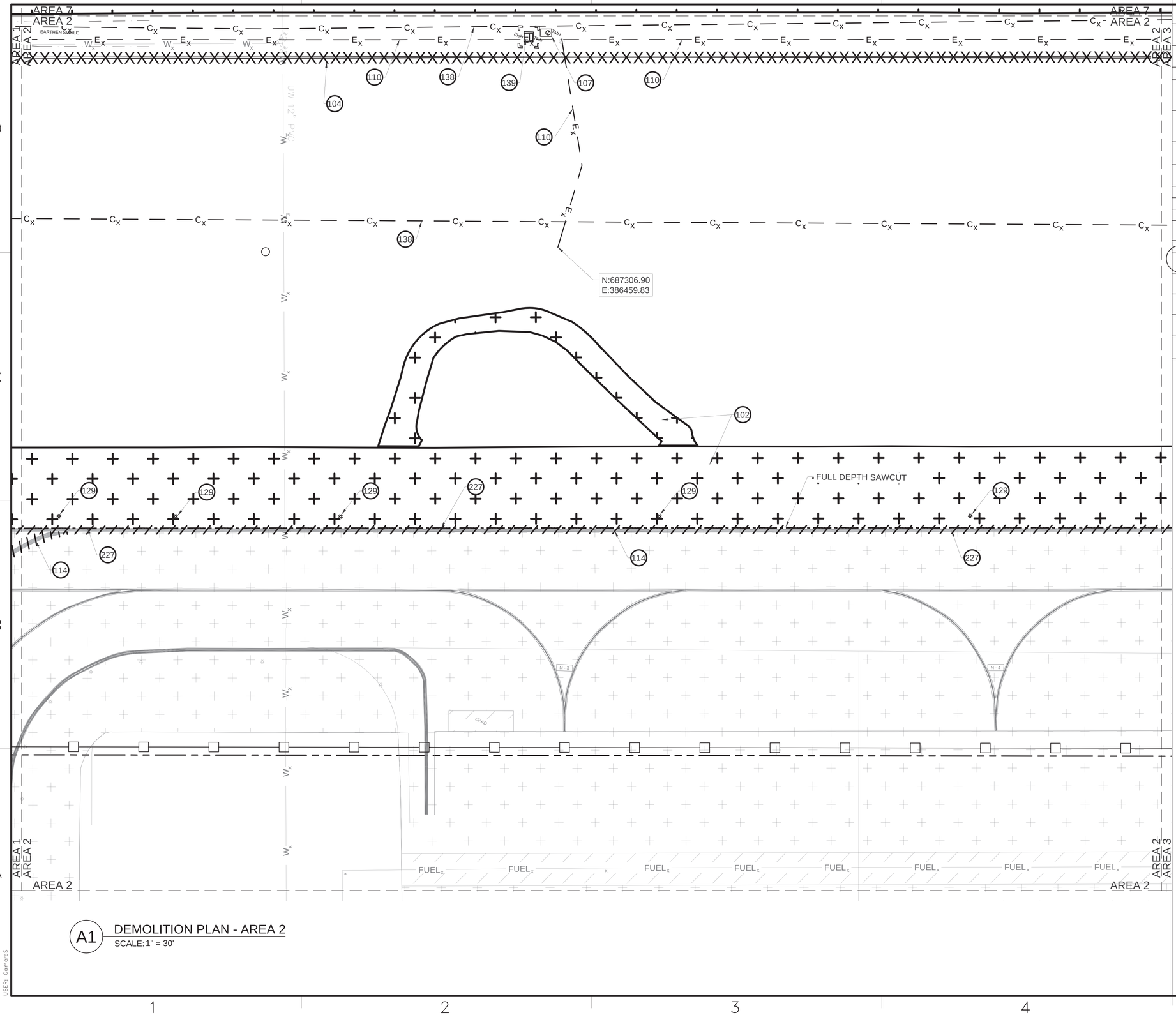

A1 DEMOLITION PLAN - AREA 2
SCALE: 1" = 30'

GENERAL NOTES

A	EXISTING IMPROVEMENTS NOT SHOWN REMOVED ON DEMOLITION PLAN SHEETS MUST BE PROTECTED IN PLACE.
B	CUT A STRAIGHT EDGE ALONG EXISTING ASPHALT PAVEMENT FOR INSTALLATION OF NEW PAVEMENT.
C	PROTECT EXISTING EDGES OF PAVEMENT TO REMAIN.
D	EXISTING SECURITY FENCE MUST REMAIN IN PLACE UNTIL TEMPORARY OR PERMANENT FENCING IS INSTALLED AND ACCEPTED. THE AIRFIELD MUST BE SECURE AT ALL TIMES.
E	COMPLY WITH ENVIRONMENTAL REQUIREMENTS AND REGULATIONS. REFER TO DIVISIONS 01 AND 02 SPECIFICATIONS. 1
F	FOR BIDDING PURPOSES, ASSUME THE THICKNESS OF THE EXISTING ASPHALT IS 6-INCHES.

KEYNOTES

102	REMOVE EXISTING ASPHALT PAVEMENT
104	REMOVE EXISTING CONCRETE WALL
107	REMOVE EXISTING ELECTRICAL MANHOLE
110	REMOVE EXISTING UNDERGROUND ELECTRIC, RE: ED101 & ED102
114	REMOVE EXISTING PAVEMENT MARKING 2
129	REMOVE EXISTING TAXIWAY EDGE LIGHT AND BASE CAN, RE: ED101 & ED102
138	REMOVE EXISTING UNDERGROUND COMM LINE, RE: TD101 & TD102
139	REMOVE EXISTING PAD-MOUNTED SWITCH AND FOUNDATION, RE: ED101
227	RECONSTRUCT EXIST ASPHALT EDGE BEFORE TYING INTO NEW PAVEMENT EDGE, RE: A3/CS502

LEGEND

- REMOVE ASPHALT PAVEMENT
- EXISTING ASPHALT PAVEMENT TO REMAIN
- LIMITS OF DISTURBANCE
- REMOVE EXISTING CONCRETE WALL
- REMOVE EXISTING PAVEMENT MARKING
- FULL DEPTH SAWCUT
- C_X — REMOVE EXISTING UNDERGROUND COMM LINE, RE: TD101 & TD102
- E_X — REMOVE EXISTING UNDERGROUND ELECTRIC, RE: ED101 & ED102
- W_X — EXISTING WATERLINE TO REMAIN
- $FUEL_X$ — EXISTING UNDERGROUND MAIN FUEL PIPE TO REMAIN
- EXISTING PAVEMENT MARKING TO REMAIN
- TEMPORARY FENCE (FREE ZONE BOUNDARY), RE: A1/CS506

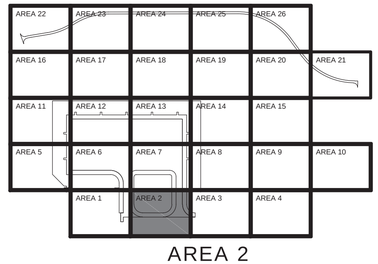

AREA 2
KEY PLAN

GRAPHIC SCALE
0 15' 30' 60'
SCALE: 1"=30'

NORTH ARROW
TRUE N

IF SHEET IS LESS THAN 22" X 34" REDUCED PRINT. USE GRAPHIC SCALES

SYM	DESCRIPTION	DATE
2	AMEND.0003 - REVISED KEYNOTE	17-APR-26
1	AMEND.0002 - ADDED NOTE	10-MAR-26

NAVFAC

JENNIFER M. HAYNES
90167
LICENSED PROFESSIONAL ENGINEER
4/16/2026
TEXAS REGISTERED ENGINEERING FIRM F-2966 SEAL

Jacobs / BURNS McDONNELL
JACOBS/B&M, A JOINT VENTURE
1100 NORTH GLEBE ROAD
SUITE 500
ARLINGTON, VA 22201
A/E Contract No. N62742-2D-0002
A/E Task Order No. N6274221F0315
JEG NO. 0343/0603
A/E INFO

APPROVED
FOR COMMANDER NAVFAC DATE 4/29/2026

ACTIVITY
AFIMSC APPROVAL PER NAVFAC SAT-TO CHECKLIST

SATISFACTORY TO DATE	31 DEC 2025
DES: JMH	DRW: SMC REV: ATM
PM/DM	KKK
BRANCH MANAGER	SMK
CHIEF ENG/ARCH	SMK
FIRE PROTECTION	RO

DEPARTMENT OF THE NAVY
NAVFAC PACIFIC
NAVAL FACILITIES ENGINEERING SYSTEMS COMMAND
NAVAL FACILITIES ENGINEERING SYSTEMS COMMAND – PACIFIC
JOINT REGION MARIANAS (JRM)
ANDERSEN AIR FORCE BASE
GUAM

FY24 AJJY183012 (P-012),
PDI: NORTH AIRCRAFT PARKING RAMP
DEMOLITION PLAN - AREA 2

SCALE:	AS SHOWN
EPROJECTS NO.:	1665555
CONSTR CONTROL NO.	
NAVFAC DRAWING NO.	17361683
SHEET	60 OF 377

CD103

REDESIGN FINAL SUBMITTAL

FILE NAME: U:\BLDG\NAVFAC Pacific\03430603 – P-012 North Aircraft Parking Ramp\700 Working Documents\740 Sheets\740.01 Civil\P012_1665555_CD103.dwg
LAYOUT NAME: DEMOLITION PLAN – AREA 2
PLOTTED: 04/15/2026 3:28pm
USER: GomezS

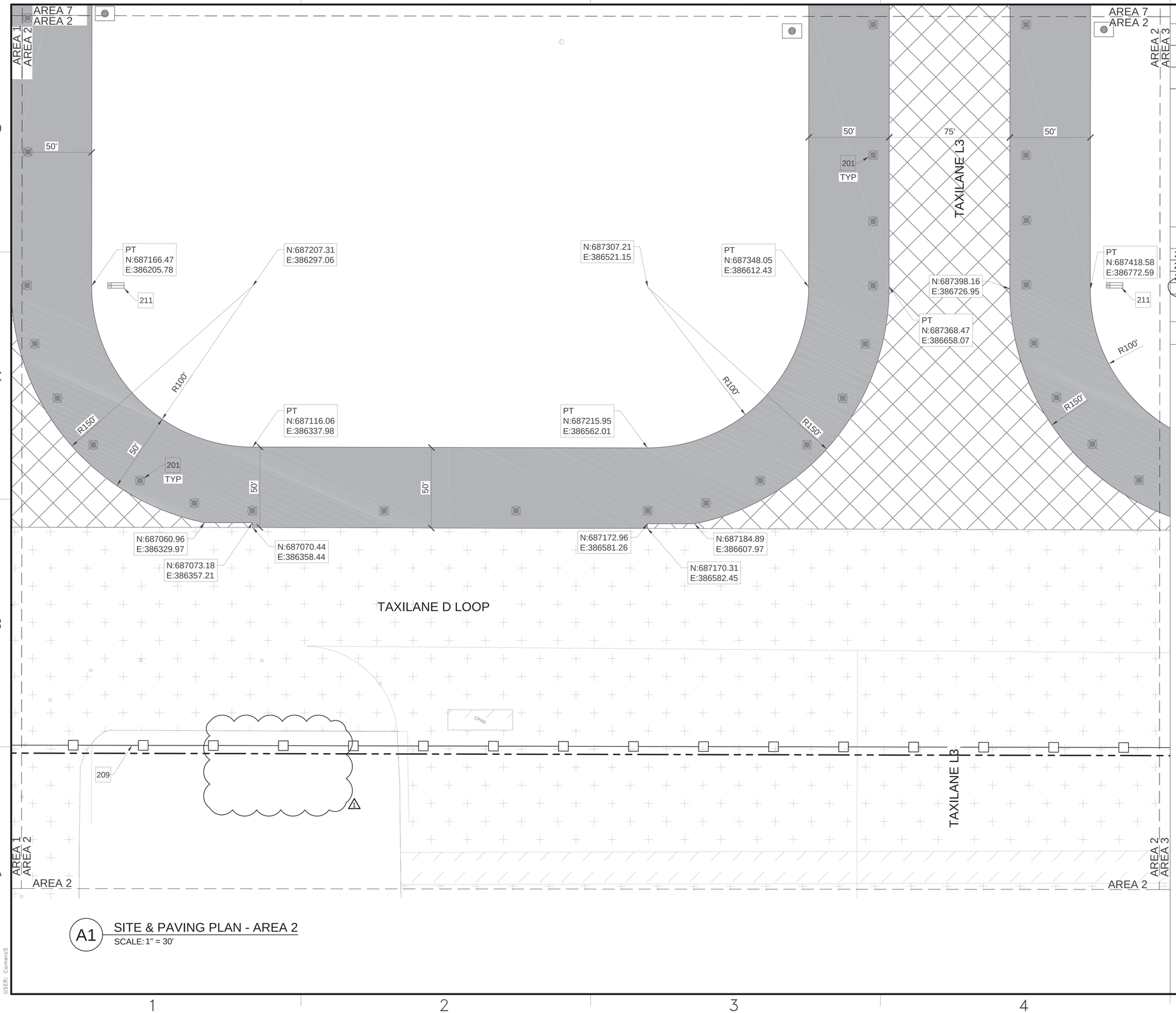

A1 SITE & PAVING PLAN - AREA 2
SCALE: 1" = 30'

GENERAL NOTES

A	DIMENSIONS ARE TO BACK OF CURB OR EDGE OF PAVEMENT, UNLESS NOTED OTHERWISE
B	REFER TO ELECTRICAL PLANS FOR SITE LIGHTING INFORMATION
C	REFER TO SHEETS CS130 - CS146 FOR PAVEMENT MARKING PLANS
D	RELOCATE FREE ZONE FENCING TO ACCOMMODATE MORE AIRCRAFT PARKING ON THE APRON THROUGHOUT CONSTRUCTION. ASSUME FREE ZONE FENCING WILL REQUIRE MOVEMENT 4 TIMES PER YEAR FOR A TOTAL OF APPROXIMATELY 120 DAYS TOTAL. FREE ZONE RELOCATION MAY BE MINIMIZED IF CONSTRUCTION OF THE TAXILANE TIE-IN WORK IS SCHEDULED OUTSIDE OF THE BASE EXERCISE PERIODS WHICH GENERALLY RUNS FROM FEBRUARY TO AUGUST EACH YEAR. COORDINATE WITH CONTRACTING OFFICER AND 36 OSS/OSAA AIRFIELD MANAGEMENT (DAMON.SHEPHERD@US.AF.MIL, 366-1010) TO DECONFLICT WITH LARGE FORCE EXERCISES AND FOR EXACT PLACEMENT OF FREE ZONE FENCING DURING TAXIWAY TIE-IN WORK.

KEYNOTES

201	TAXIWAY EDGE LIGHTS, REFER TO ELECTRICAL PLANS
209	TEMPORARY FENCE (FREE ZONE BOUNDARY), RE: A1/CS506
211	AIRFIELD GUIDANCE SIGN

LEGEND

- AIRFIELD CONCRETE PAVEMENT AT TAXILANES L2 AND L3 RE: D1/CS501
- ASPHALT SHOULDER PAVEMENT, RE: C2/CS501
- EXISTING ASPHALT PAVEMENT
- EXISTING CONCRETE PAVEMENT
- LIMITS OF DISTURBANCE
- TEMPORARY FENCE (FREE ZONE BOUNDARY), RE: A1/CS506
- ELECTRICAL / COMM MANHOLE
- TAXIWAY EDGE LIGHTS
- AIRFIELD GUIDANCE SIGN
- EXISTING ELECTRICAL MANHOLE/ HANDHOLE
- PT — POINT OF TANGENT
- EXISTING TAXIWAY EDGE LIGHT

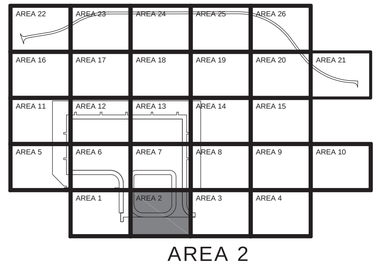

AREA 2
KEY PLAN

GRAPHIC SCALE
0 15' 30' 60'
SCALE: 1"=30'

NORTH ARROW
TRUE N

SYM	DESCRIPTION	DATE
1	AMEND.0003 - REMOVED PERSONNEL GATE	17-APR-26

NAVFAC

STATE OF TEXAS
ANDREW T. MCCOY
96627
LICENSED
PROFESSIONAL ENGINEER
4/16/2026
TEXAS REGISTERED ENGINEERING FIRM F-2966 SEAL

Jacobs / BURNS McDONNELL
JACOBS/B&M, A JOINT VENTURE
1100 NORTH GLEBE ROAD
SUITE 500
ARLINGTON, VA 22201
A/E Contract No. N62742-20-D-0002
A/E Task Order No. N6274221F0315
JEG NO. 0343603
A/E INFO

APPROVED
FOR COMMANDER NAVFAC DATE 4/29/2026

ACTIVITY
AFIMSC APPROVAL PER NAVFAC SAT-TO CHECKLIST

SATISFACTORY TO DATE	31 DEC 2025
DES: JMH	DRW: SMC REV: ATM
PM/DM	KKK
BRANCH MANAGER	SMK
CHIEF ENG/ARCH	SMK
FIRE PROTECTION	RO

DEPARTMENT OF THE NAVY
NAVFAC PACIFIC
NAVAL FACILITIES ENGINEERING SYSTEMS COMMAND
NAVAL FACILITIES ENGINEERING SYSTEMS COMMAND – PACIFIC
JOINT REGION MARIANAS (JRM)
ANDERSEN AIR FORCE BASE
GUAM

FY24 AJJY183012 (P-012),
PDI: NORTH AIRCRAFT PARKING RAMP
SITE & PAVING PLAN - AREA 2

SCALE:	AS SHOWN
EPROJECTS NO.:	1665555
CONSTR CONTROL NO.	
NAVFAC DRAWING NO.	17361718
SHEET	95 OF 377

CS103

REDESIGN FINAL SUBMITTAL

IF SHEET IS LESS THAN 22" X 34" REDUCED PRINT. USE GRAPHIC SCALES

FILE NAME: U:\BLDG\NAVFAC Pacific\D3430603 – P-012 North Aircraft Parking Ramp\700 Working Documents\740 Sheets\740.01 Civil\P012_1665555_CS103.dwg
LAYOUT NAME: SITE PLAN – AREA 2
PLOTTED: 04/14/2026 7:39am
USER: Cameros

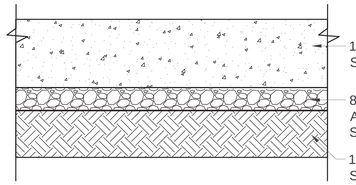

NOTES:
1. GRADED-CRUSHED AGGREGATE BASE COURSE MUST BE COMPACTED TO AT LEAST 95% OF THE MAXIMUM DRY DENSITY AS DETERMINED BY THE MODIFIED PROCTOR (ASTM D1557) AS SPECIFIED IN SECTION 32 11 23.
2. THE TOP 12" OF SUBGRADE MUST BE COMPACTED TO AT LEAST 100% OF THE MAXIMUM DRY DENSITY AS DETERMINED BY THE MODIFIED PROCTOR (ASTM D1557) AS SPECIFIED IN SECTION 31 00 00.

D1 AIRFIELD CONCRETE PAVEMENT SECTION AT TAXILANES L2 AND L3
SCALE: NTS

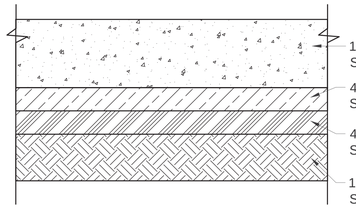

NOTES:
1. THE TOP 12" OF SUBGRADE MUST BE COMPACTED TO AT LEAST 100% OF THE MAXIMUM DRY DENSITY AS DETERMINED BY THE MODIFIED PROCTOR (ASTM D1557) AS SPECIFIED IN SECTION 31 00 00.

C1 AIRFIELD CONCRETE PAVEMENT SECTION
SCALE: NTS

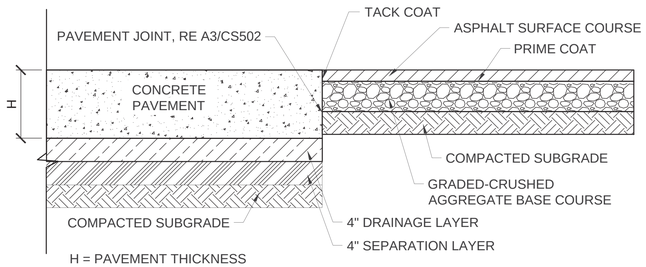

B1 NEW AIRFIELD CONCRETE PAVEMENT TO NEW ASPHALT SHOULDER PAVEMENT JUNCTION
SCALE: NTS

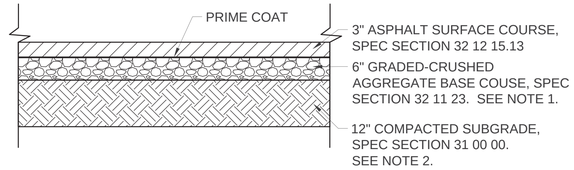

NOTES:
1. GRADED-CRUSHED AGGREGATE BASE COURSE MUST BE COMPACTED TO AT LEAST 95% OF THE MAXIMUM DRY DENSITY AS DETERMINED BY THE MODIFIED PROCTOR (ASTM D1557) AS SPECIFIED IN SECTION 32 11 23.
2. THE TOP 12" OF SUBGRADE MUST BE COMPACTED TO AT LEAST 100% OF THE MAXIMUM DRY DENSITY AS DETERMINED BY THE MODIFIED PROCTOR (ASTM D1557) AS SPECIFIED IN SECTION 31 00 00.

C2 ASPHALT SHOULDER PAVEMENT SECTION
SCALE: NTS

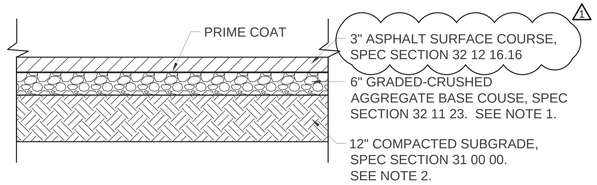

NOTES:
1. GRADED-CRUSHED AGGREGATE BASE COURSE MUST BE COMPACTED TO AT LEAST 95% OF THE MAXIMUM DRY DENSITY AS DETERMINED BY THE MODIFIED PROCTOR (ASTM D1557) AS SPECIFIED IN SECTION 32 11 23. GRADED-CRUSHED AGGREGATE BASE MUST BE BUILT AT LEAST TWO FEET WIDER THAN THE PAVEMENT ON EACH SIDE.
2. THE TOP 12" OF SUBGRADE MUST BE COMPACTED TO AT LEAST 100% OF THE MAXIMUM DRY DENSITY AS DETERMINED BY THE MODIFIED PROCTOR (ASTM D1557) AS SPECIFIED IN SECTION 31 00 00.

C3 ASPHALT ROADWAY PAVEMENT SECTION
SCALE: NTS

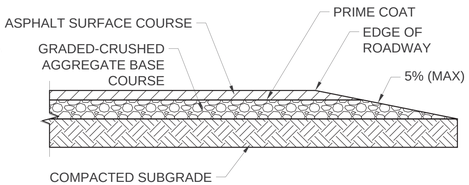

D4 ASPHALT TAPER
SCALE: : NTS

B4 DOUBLE SAWCUT DETAIL
SCALE: NTS

NOTE:
1. THE FIRST FULL-DEPTH SAWCUT MUST BE MADE ON THE JOINT AND MUST BE ACCOMPLISHED ONLY WITH A MOTOR DRIVEN DIAMOND BLADED SAW 1/8" (MIN. WIDTH).THE SECOND AND FINAL FULL-DEPTH SAWCUT MUST BE ON THE INSIDE OF THE JOINT AND A MINIMUM OF 24" FROM THE EXISTING JOINT AND MUST BE ACCOMPLISHED WITH A WHEEL SAW WITH A CUTTING WIDTH OF 1-1/2" (MIN.)

SYM	DESCRIPTION	DATE
1	AMEND.0003 - REVISED SPEC REFERENCE	17-APR-26

NAVFAC

STATE OF TEXAS
ANDREW T. MCCOY
96627
LICENSED PROFESSIONAL ENGINEER
4/16/2026
TEXAS REGISTERED ENGINEERING FIRM F-2966 SEAL

Jacobs / BURNS McDONNELL
JACOBS/B&M, A JOINT VENTURE
1100 NORTH GLEBE ROAD
SUITE 500
ARLINGTON, VA 22201

A/E Contract No. N62742-20-D-0002
A/E Task Order No. N6274221F0315
JEG NO. 0343603
A/E INFO

APPROVED
FOR COMMANDER NAVFAC DATE 4/29/2026

ACTIVITY
AFI/MSC APPROVAL PER NAVFAC SAT-TO CHECKLIST

SATISFACTORY TO DATE 31 DEC 2025

DES:	JMH	DRW:	SMC	REV:	ATM
PM/DM					KKK
BRANCH MANAGER					SMK
CHIEF ENG/ARCH					SMK
FIRE PROTECTION					RO

DEPARTMENT OF THE NAVY
NAVAL FACILITIES ENGINEERING SYSTEMS COMMAND
NAVFAC PACIFIC
NAVAL FACILITIES ENGINEERING SYSTEMS COMMAND – PACIFIC
JOINT REGION MARIANAS (JRM)
ANDERSEN AIR FORCE BASE
GUAM

FY24 AJJY183012 (P-012),
PDI: NORTH AIRCRAFT PARKING RAMP

SITE DETAILS

SCALE: AS SHOWN
EPROJECTS NO.: 1665555
CONSTR CONTROL NO.
NAVFAC DRAWING NO. 17361778
SHEET 155 OF 377

CS501

REDESIGN FINAL SUBMITTAL

IF SHEET IS LESS THAN 22" X 34" REDUCED PRINT. USE GRAPHIC SCALES

FILE NAME: U:\BLDG\NAVFAC Pacific\03430603 – P-012 North Aircraft Parking Ramp\700 Working Documents\740 Sheets\740.01 Civil\P012_1665555_CS501.dwg
LAYOUT NAME: SITE DETAILS
PLOTTED: 04/14/2026 10:19am
USER: CameronS

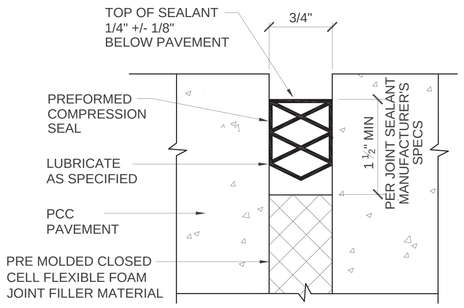

D1 EXPANSION JOINT SEALANT
SCALE: NTS

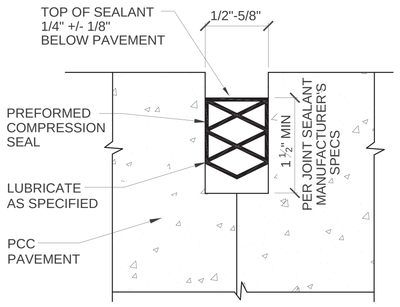

D2 CONSTRUCTION JOINT SEALANT
SCALE: NTS

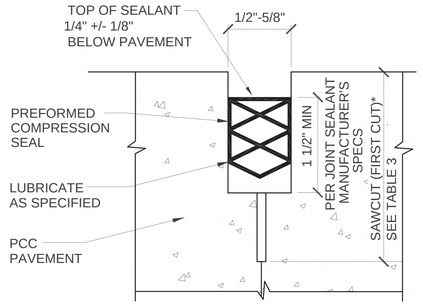

D3 CONTRACTION JOINT SEALANT
SCALE: NTS

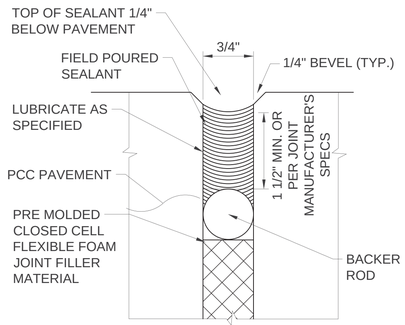

D4 EXPANSION JOINT SEALANT
SCALE: NTS

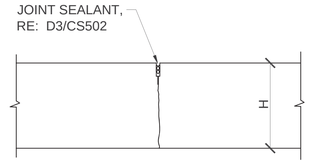

D5 SAWED CONTRACTION JOINT
SCALE: NTS

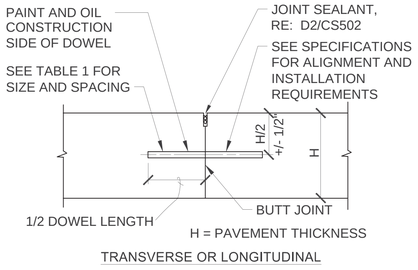

C1 DOWELED CONSTRUCTION JOINT
SCALE: NTS

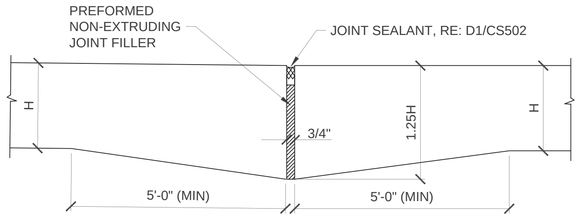

C2 THICKENED EDGE EXPANSION JOINT
SCALE: NTS

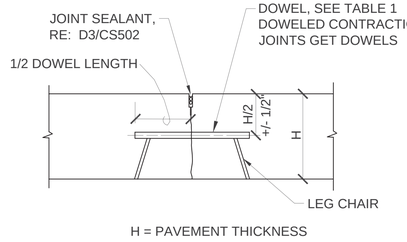

C3 DOWELED CONTRACTION JOINT
SCALE: NTS

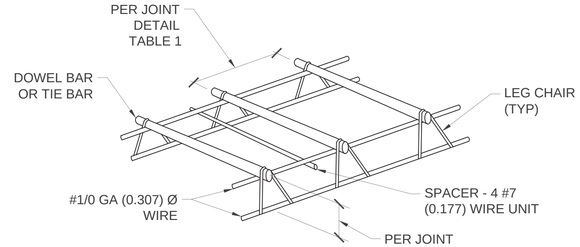

NOTES:

1. ANY PORTION OF THE BASKET IN CONTACT WITH THE SUBGRADE, INCLUDING AGGREGATE BASE COURSE, MUST BE EPOXY COATED.
2. BASKET MUST BE SECURELY STAKED TO THE SURFACE ON WHICH THEY ARE PLACED TO PREVENT MOVEMENT DURING PCC PLACEMENT.

C5 CONSTRUCTION JOINT DOWEL BASKET
SCALE: NTS

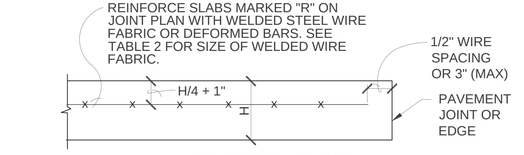

NOTE:

1. WELDED WIRE FABRIC MUST BE OVERLAPPED FOR A DISTANCE AT LEAST ONE SPACING OF THE WIRE IN THE FABRIC OR 32 WIRE DIAMETERS, WHICHEVER IS GREATER.

B1 CONCRETE SLAB REINFORCING DETAIL
SCALE: NTS

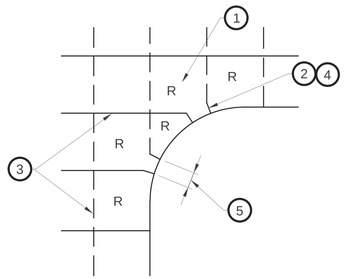

NOTES:
1. ODD SHAPED SLABS MUST BE REINFORCED.
2. MINIMUM 'LEG' DIMENSION 3'.
3. LONGITUDINAL AND TRANSVERSE JOINTS AS SHOWN ON DRAWINGS.
4. 'LEGS' MUST BE UNDOWELLED CONSTRUCTION JOINTS.
5. MINIMUM SPACING BETWEEN 'LEGS' MUST BE 3'.

A1 TYPICAL JOINTING OF ODD SHAPED SLABS
SCALE: NTS

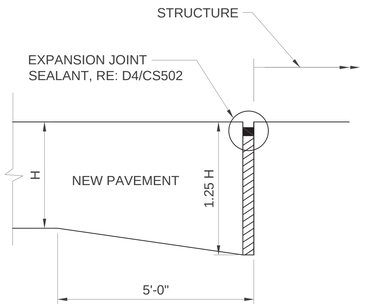

A2 EXPANSION JOINT AROUND STRUCTURE
SCALE: NTS

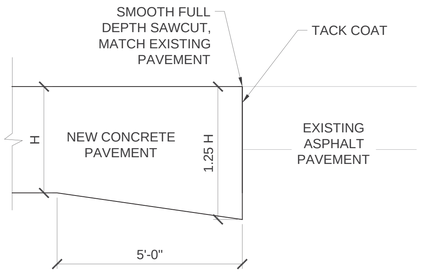

A3 NEW CONCRETE PAVEMENT TO EXISTING ASPHALT PAVEMENT JOINT
SCALE: NTS

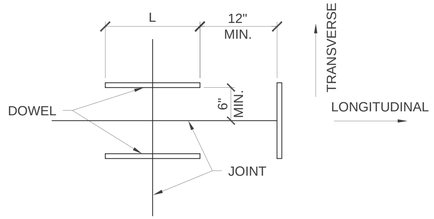

B3 DOWEL PLACEMENT AT INTERSECTIONS
SCALE: NTS

TABLE 1 DOWEL SIZE AND SPACING FOR CONSTRUCTION AND CONTRACTION JOINTS

SLAB THICKNESS H (IN.)	MINIMUM DOWEL LENGTH (IN.)	MAXIMUM DOWEL SPACING ON-CENTER (IN.)	DOWEL DIAMETER (IN.)
12.0 - 15.5	20.0	15.0	1.00 - 1.25
16.0 - 20.5	20.0	18.0	1.00 - 1.50
21.0 - 25.5	24.0	18.0	2.00
26.0 OR MORE	30.0	18.0	3.00

TABLE 2

PAVEMENT THICKNESS (INCHES)	MINIMUM REQUIRED AREA OF STEEL (SQ. INCHES/FOOT)	WELDED WIRE FABRIC
6"	0.048	4x4-W2.0xW2.0 6x6-W2.9xW2.9
7"	0.15	4x4-W5.5xW5.5 6x6-W8xW8
14"	0.05	6x6-W4XW4
18" ±	0.33	4x4-W12xW12 6x6-W18XW18

TABLE 3 (SAWCUT)

PAVEMENT THICKNESS	FIRST SAWCUT DEPTH
6"	2"
7"	2.5"
14"	3"
18"	3"

SYM	DESCRIPTION	DATE
1	AMEND.0003 - REMOVED PERSONNEL GATE	17-APR-26

NAVFAC

STATE OF TEXAS
ANDREW T. MCCOY
96627
LICENSED
PROFESSIONAL ENGINEER
4/16/2026
TEXAS REGISTERED ENGINEERING FIRM F-2966 SEAL

Jacobs / BURNS McDONNELL
JACOBS/B&M, A JOINT VENTURE
1100 NORTH GLEBE ROAD
SUITE 500
ARLINGTON, VA 22201
A/E Contract No. N62742-2(-D-0002
A/E Task Order No. N6274221F0315
JEG NO. 0343603
A/E INFO

APPROVED
FOR COMMANDER NAVFAC DATE 4/29/2026

ACTIVITY
AFIMSC APPROVAL PER NAVFAC SAT-TO CHECKLIST

SATISFACTORY TO DATE 31 DEC 2025

DES:	JMH	DRW:	SMC	REV:	ATM
PM/DM					KKK
BRANCH MANAGER					SMK
CHIEF ENG/ARCH					SMK
FIRE PROTECTION					RO

DEPARTMENT OF THE NAVY
NAVFAC PACIFIC
NAVAL FACILITIES ENGINEERING SYSTEMS COMMAND
NAVAL FACILITIES ENGINEERING SYSTEMS COMMAND – PACIFIC
JOINT REGION MARIANAS (JRM)
ANDERSEN AIR FORCE BASE
GUAM

FY24 AJY183012 (P-012),
PDI: NORTH AIRCRAFT PARKING RAMP

SITE DETAILS

SCALE: AS SHOWN
EPROJECTS NO.: 1665555
CONSTR CONTROL NO.
NAVFAC DRAWING NO. 17361779
SHEET 156 OF 377

CS502

REDESIGN FINAL SUBMITTAL

IF SHEET IS LESS THAN 22" X 34"
REDUCED PRINT. USE GRAPHIC SCALES

FILE NAME: U:\BLDG\NAVFAC Pacific\D3430603 – P-012 North Aircraft Parking Ramp\700 Working Documents\740 Sheets\740.01 Civil\P012_1665555_CS502.dwg
LAYOUT NAME: SITE DETAILS
PLOTTED: 04/24/2026 8:41am
USER: CamaroS

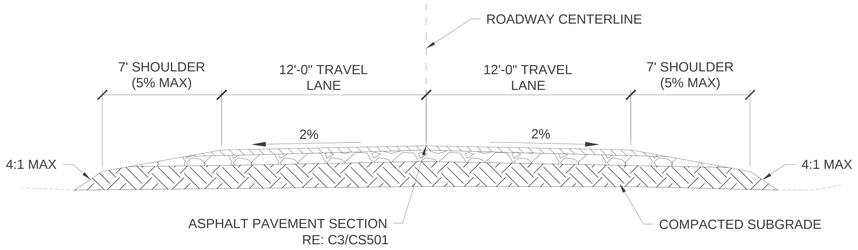

D1 TYPICAL CROWNED ROADWAY PAVEMENT SECTION DETAILS

SCALE: NTS

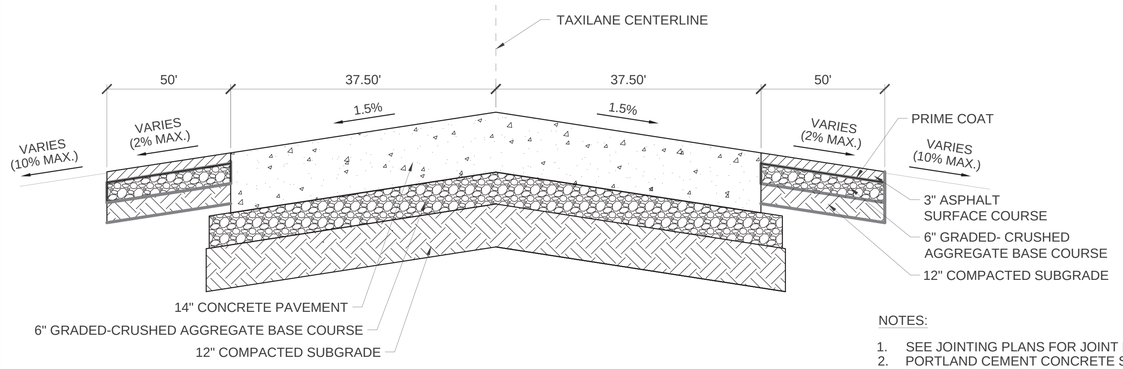

NOTES:

1. SEE JOINTING PLANS FOR JOINT DETAILS.
2. PORTLAND CEMENT CONCRETE SLOPES ARE 1.5% EXCEPT AS SHOWN ON JOINT ELEVATION PLANS, GRADING PLANS.

C1 TYPICAL TAXILANE PAVEMENT SECTION DETAILS

SCALE: NTS

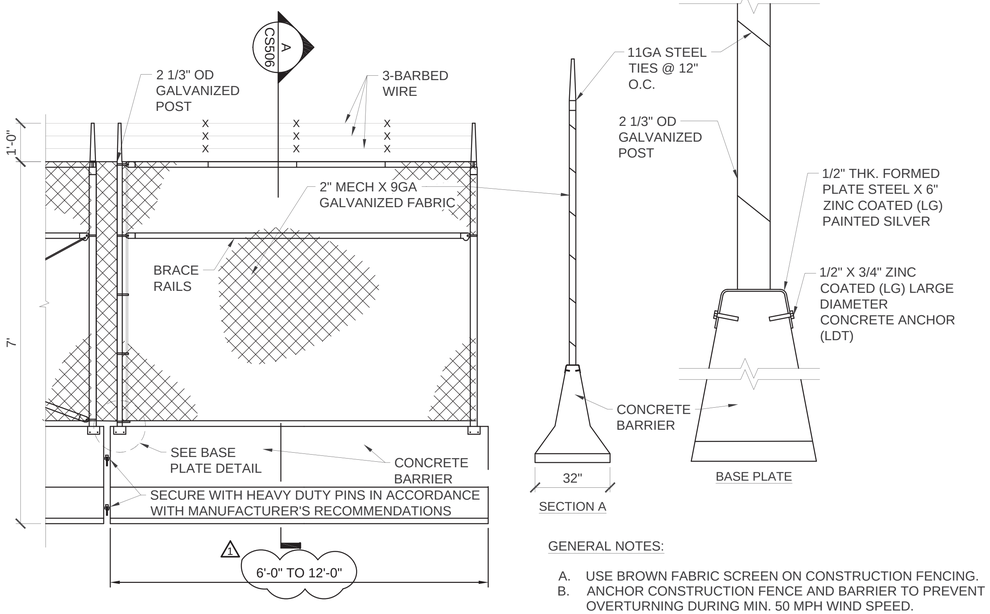

GENERAL NOTES:

A. USE BROWN FABRIC SCREEN ON CONSTRUCTION FENCING.
B. ANCHOR CONSTRUCTION FENCE AND BARRIER TO PREVENT OVERTURNING DURING MIN. 50 MPH WIND SPEED.
C. CONNECTION TO EXISTING FENCE MUST BE SECURE. SUBMIT CONNECTION PLAN TO CONTRACTING OFFICER FOR APPROVAL.
D. SECURE TEMPORARY GATES TO TEMPORARY FENCING IN A MANNER THAT FACILITATES A SECURE FREE ZONE.

A1 TEMPORARY FENCE

SCALE: NTS

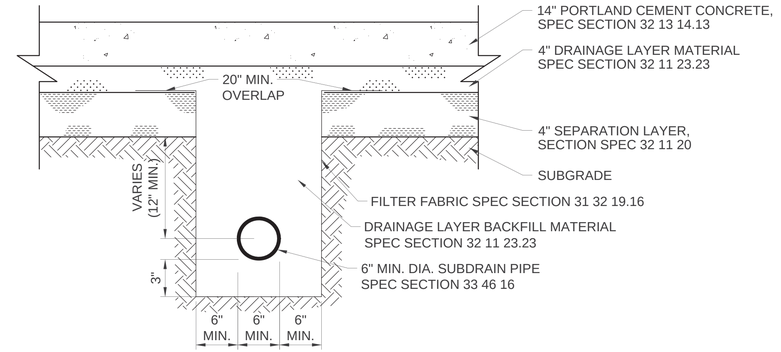

NOTE:

1. REFER TO SHEET CS501 FOR PAVEMENT DETAILS AND ADDITIONAL INFORMATION.

D4 AIRFIELD CONCRETE SUBDRAIN PAVEMENT

SCALE: NTS

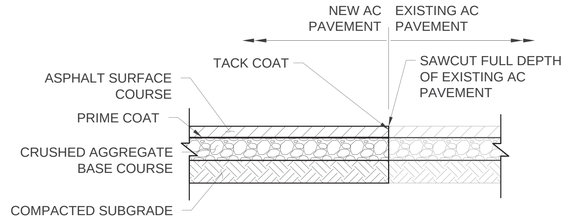

C4 NEW ASPHALT PAVEMENT TO EXISTING ASPHALT PAVEMENT JUNCTION

SCALE: NTS

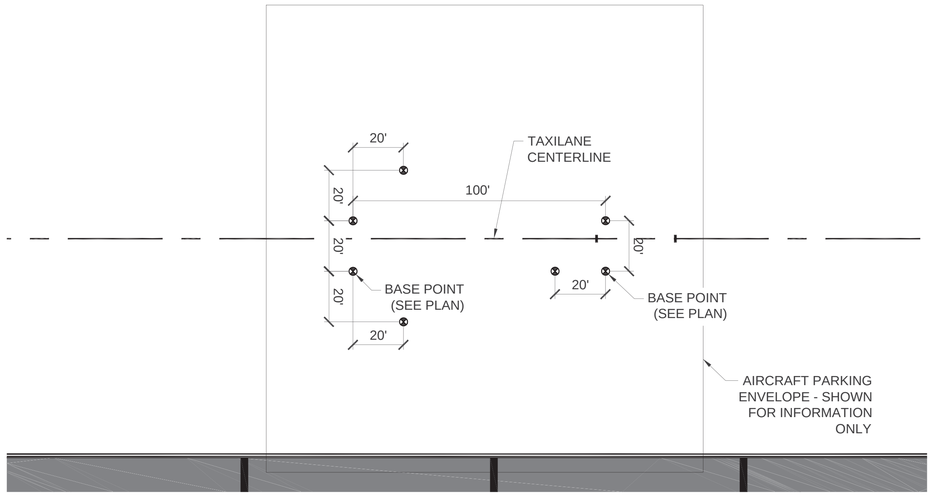

A4 TYPICAL AIRCRAFT TIEDOWN LAYOUT

SCALE: 1" = 20'

SYM	DESCRIPTION	DATE
1	AMEND.0003 - REVISED BARRIER LENGTH	17-APR-26

NAVFAC

STATE OF TEXAS
ANDREW T. MCCOY
96627
LICENSED PROFESSIONAL ENGINEER
4/16/2026
TEXAS REGISTERED ENGINEERING FIRM F-2966 SEAL

Jacobs / BURNS McDONNELL
JACOBS/B&M, A JOINT VENTURE
1100 NORTH GLEBE ROAD
SUITE 500
ARLINGTON, VA 22201

A/E Contract No. N62742-2D-0002
A/E Task Order No. N6274221F0315
JEG NO. 0343/0603
A/E INFO

APPROVED
FOR COMMANDER NAVFAC DATE 4/29/2026

ACTIVITY
AFIMSC APPROVAL PER NAVFAC SAT-TO CHECKLIST

SATISFACTORY TO DATE 31 DEC 2025

DES:	JMH	DRW:	SMC	REV:	ATM
PM/DM					KKK
BRANCH MANAGER					SMK
CHIEF ENG/ARCH					SMK
FIRE PROTECTION					RO

DEPARTMENT OF THE NAVY
NAVFAC PACIFIC
ANDERSEN AIR FORCE BASE
NAVAL FACILITIES ENGINEERING SYSTEMS COMMAND
NAVAL FACILITIES ENGINEERING SYSTEMS COMMAND – PACIFIC
JOINT REGION MARIANAS (JRM)
GUAM

FY24 AJJY183012 (P-012),
PDI: NORTH AIRCRAFT PARKING RAMP

SITE DETAILS

SCALE: AS SHOWN
EPROJECTS NO.: 1665555
CONSTR CONTROL NO.
NAVFAC DRAWING NO. 17361783
SHEET 160 OF 377

CS506

REDESIGN FINAL SUBMITTAL

IF SHEET IS LESS THAN 22" X 34" REDUCED PRINT. USE GRAPHIC SCALES

FILE NAME: U:\BLDG\NAVFAC Pacific\D3430603 – P-012 North Aircraft Parking Ramp\700 Working Documents\740 Sheets\740.01 Civil\P012_1665555_CS506.dwg
LAYOUT NAME: SITE DETAILS
PLOTTED: 04/16/2026 5:53pm
USER: ComerroS

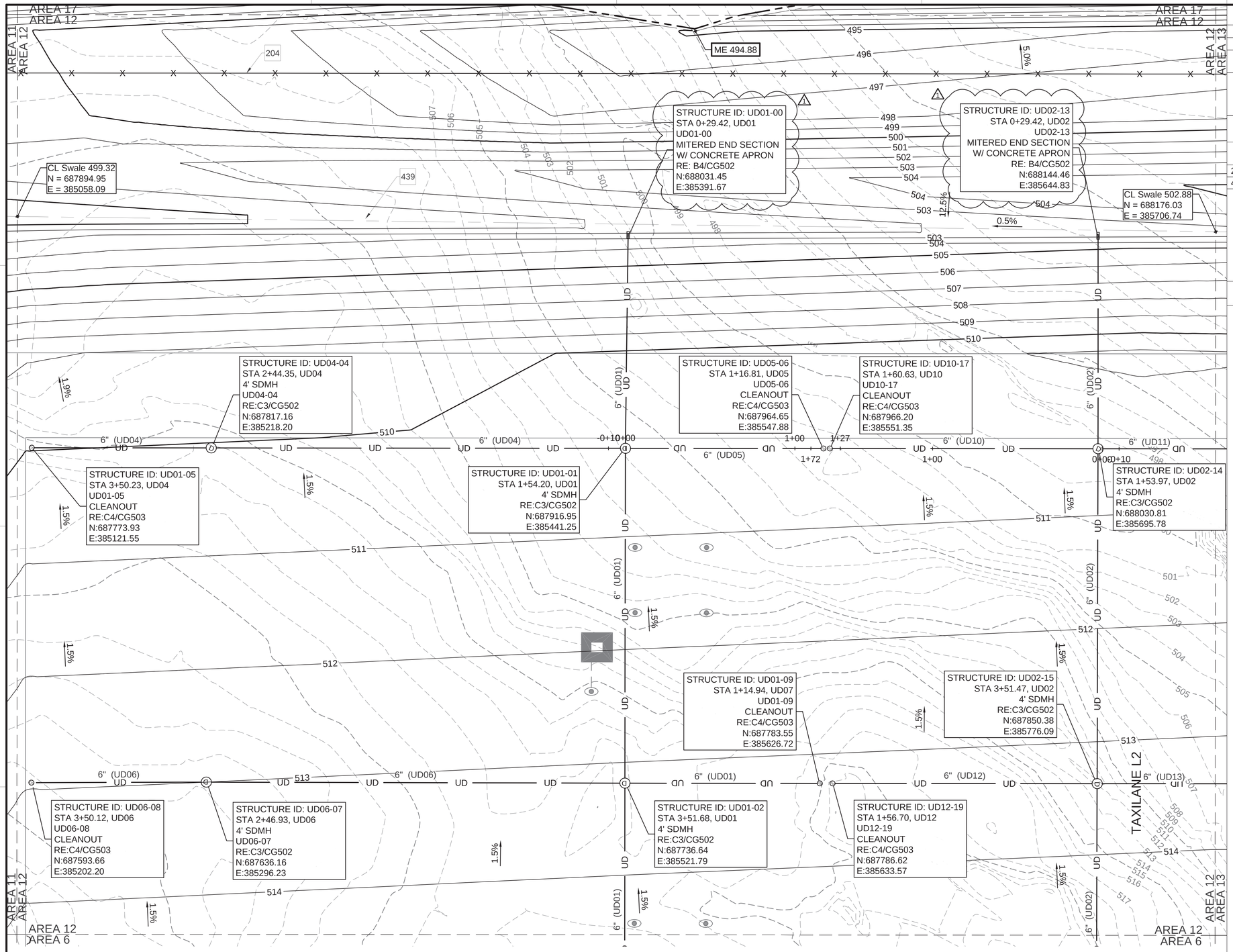

A1 GRADING AND DRAINAGE PLAN - AREA 12

SCALE: 1" = 30'

GENERAL NOTES

A	CONTOURS ARE AT 1' INTERVALS
B	ADJUST NEW AND EXISTING UTILITY COVERS TO NEW GRADE
C	REFER TO SHEETS CG201 TO CG210 FOR STORM DRAIN PROFILES
D	EXCAVATED SOIL WILL BE STOCKPILED ON SITE IN THE NORTHEAST CORNER AND NORTHWEST CORNER OF THE SITE. REFER TO SHEET GI001 FOR RECOMMENDED STOCKPILE AREAS.

KEYNOTES

204	7' HIGH SECURITY FENCE, RE: B1/CS505 & C1/CS505
439	5.0' BOTTOM SWALE, RE: C1/CG502

LEGEND

- LIMITS OF DISTURBANCE
- LIMITS OF GRADING
- 7' HIGH SECURITY FENCE, RE: C1/CS505
- 525 EXISTING MAJOR CONTOUR
- 524 EXISTING MINOR CONTOUR
- 524 MINOR CONTOUR
- 525 MAJOR CONTOUR
- CENTERLINE OF SWALE
- UD UNDERDRAIN
- (D) STORM DRAIN MANHOLE, RE: C3/CG502
- STORM DRAIN CLEANOUT, RE: C4/CG503
- TP TOP OF PAVEMENT ELEVATION
- CL CENTERLINE ELEVATION
- XXX SLOPE (PERCENT)
- FUEL HYDRANT PIT,SEE CF101 FOR HYDRANT PIT NUMBERING AND MARKING, RE: C4/CS504
- STATIC GROUND
- FIRE HYDRANT, RE: C1/CU502

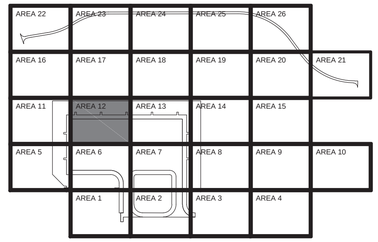

AREA 12
KEY PLAN

GRAPHIC SCALE
0 15' 30' 60'
SCALE: 1"=30'

NORTH ARROW
TRUE N

IF SHEET IS LESS THAN 22" X 34" REDUCED PRINT. USE GRAPHIC SCALES

SYM	DESCRIPTION	DATE
1	AMEND.0003 - ADDED DETAIL REFERENCE	17-APR-26

NAVFAC

STATE OF TEXAS
JENNIFER M. HAYNES
90167
LICENSED
PROFESSIONAL ENGINEER
4/16/2026
TEXAS REGISTERED ENGINEERING FIRM F-2966 SEAL

Jacobs / BURNS McDONNELL
JACOBS/B&M, A JOINT VENTURE
1100 NORTH GLEBE ROAD
SUITE 500
ARLINGTON, VA 22201
A/E Contract No. N62742-2D-0002
A/E Task Order No. N6274221F0315
JEG NO. 0343M003
A/E INFO

APPROVED
FOR COMMANDER NAVFAC DATE 4/29/2026

ACTIVITY
AFIMSC APPROVAL PER NAVFAC SAT-TO CHECKLIST

SATISFACTORY TO DATE	31 DEC 2025
DES: JMH	DRW: SMC REV: ATM
PM/DM	KKK
BRANCH MANAGER	SMK
CHIEF ENG/ARCH	SMK
FIRE PROTECTION	RO

DEPARTMENT OF THE NAVY
NAVFAC PACIFIC
NAVAL FACILITIES ENGINEERING SYSTEMS COMMAND
NAVAL FACILITIES ENGINEERING SYSTEMS COMMAND – PACIFIC
JOINT REGION MARIANAS (JRM)
ANDERSEN AIR FORCE BASE
GUAM

FY24 AJY183012 (P-012),
PDI: NORTH AIRCRAFT PARKING RAMP
GRADING AND DRAINAGE PLAN - AREA 12

SCALE:	AS SHOWN
EPROJECTS NO.:	1665555
CONSTR CONTROL NO.	
NAVFAC DRAWING NO.	17361811
SHEET	188 OF 377

CG113

REDESIGN FINAL SUBMITTAL

FILE NAME: U:\BLDG\NAVFAC Pacific\D3430603 – P-012 North Aircraft Parking Ramp\700 Working Documents\740 Sheets\740.01 Civil\P012_1665555_CG113.dwg
LAYOUT NAME: GRADING AND DRAINAGE PLAN – AREA 12
PLOTTED: 04/16/2026 5:27pm
USER: CamesS

GENERAL NOTES

A	CONTOURS ARE AT 1' INTERVALS
B	ADJUST NEW AND EXISTING UTILITY COVERS TO NEW GRADE
C	REFER TO SHEETS CG201 TO CG210 FOR STORM DRAIN PROFILES
D	EXCAVATED SOIL WILL BE STOCKPILED ON SITE IN THE NORTHEAST CORNER AND NORTHWEST CORNER OF THE SITE. REFER TO SHEET GI001 FOR RECOMMENDED STOCKPILE AREAS.

KEYNOTES

204	7' HIGH SECURITY FENCE, RE: B1/CS505 & C1/CS505
439	5.0' BOTTOM SWALE, RE: C1/CG502

LEGEND

- 7' HIGH SECURITY FENCE, RE: C1/CS505
- EXISTING SINKHOLE
- EXISTING MAJOR CONTOUR
- EXISTING MINOR CONTOUR
- MINOR CONTOUR
- MAJOR CONTOUR
- CENTERLINE OF SWALE
- UNDERDRAIN
- STORM DRAIN
- STORM DRAIN MANHOLE, RE: C3/CG502
- STORM DRAIN CLEANOUT, RE: C4/CG503
- TOP OF PAVEMENT ELEVATION
- CENTERLINE ELEVATION
- SLOPE (PERCENT)
- FUEL HYDRANT PIT,SEE CF101 FOR HYDRANT PIT NUMBERING AND MARKING, RE: C4/CS504
- STATIC GROUND
- FIRE HYDRANT, RE: C1/CU502

SYM	DESCRIPTION	DATE
1	AMEND.0003 - ADDED DETAIL REFERENCE	17-APR-26

NAVFAC

STATE OF TEXAS
JENNIFER M. HAYNES
90167
LICENSED
PROFESSIONAL ENGINEER
4/16/2026
TEXAS REGISTERED ENGINEERING FIRM F-2966 SEAL

Jacobs / BURNS McDONNELL
JACOBS/B&M, A JOINT VENTURE
1100 NORTH GLEBE ROAD
SUITE 500
ARLINGTON, VA 22201
A/E Contract No. N62742-22-D-0002
A/E Task Order No. N6274221F0315
JCG NO. 0343/0003
A/E INFO

APPROVED
FOR COMMANDER NAVFAC DATE 4/29/2026

ACTIVITY
AFIMSC APPROVAL PER NAVFAC SAT-TO CHECKLIST

SATISFACTORY TO DATE 31 DEC 2025

DES:	JMH	DRW:	SMC	REV:	ATM
PM/DM					KKK
BRANCH MANAGER					SMK
CHIEF ENG/ARCH					SMK
FIRE PROTECTION					RO

DEPARTMENT OF THE NAVY
NAVFAC PACIFIC
NAVAL FACILITIES ENGINEERING SYSTEMS COMMAND
NAVAL FACILITIES ENGINEERING SYSTEMS COMMAND – PACIFIC
JOINT REGION MARIANAS (JRM)
ANDERSEN AIR FORCE BASE
GUAM

FY24 AJJY183012 (P-012),
PDI: NORTH AIRCRAFT PARKING RAMP
GRADING AND DRAINAGE PLAN - AREA 13

AREA 13
KEY PLAN

GRAPHIC SCALE
0 15' 30' 60'
SCALE: 1"=30'

NORTH ARROW
TRUE N

SCALE: AS SHOWN
EPROJECTS NO.: 1665555
CONSTR CONTROL NO.
NAVFAC DRAWING NO. 17361812
SHEET 189 OF 377

CG114

A1 GRADING AND DRAINAGE PLAN - AREA 13
SCALE: 1" = 30'

IF SHEET IS LESS THAN 22" X 34" REDUCED PRINT. USE GRAPHIC SCALES

REDESIGN FINAL SUBMITTAL

FILE NAME: U:\BLDG\NAVFAC Pacific\D3430603 – P-012 North Aircraft Parking Ramp\700 Working Documents\740 Sheets\740.01 Civil\P012_1665555_CG114.dwg
LAYOUT NAME: GRADING AND DRAINAGE PLAN – AREA 13
PLOTTED: 04/16/2026 9:50am
USER: CameroS

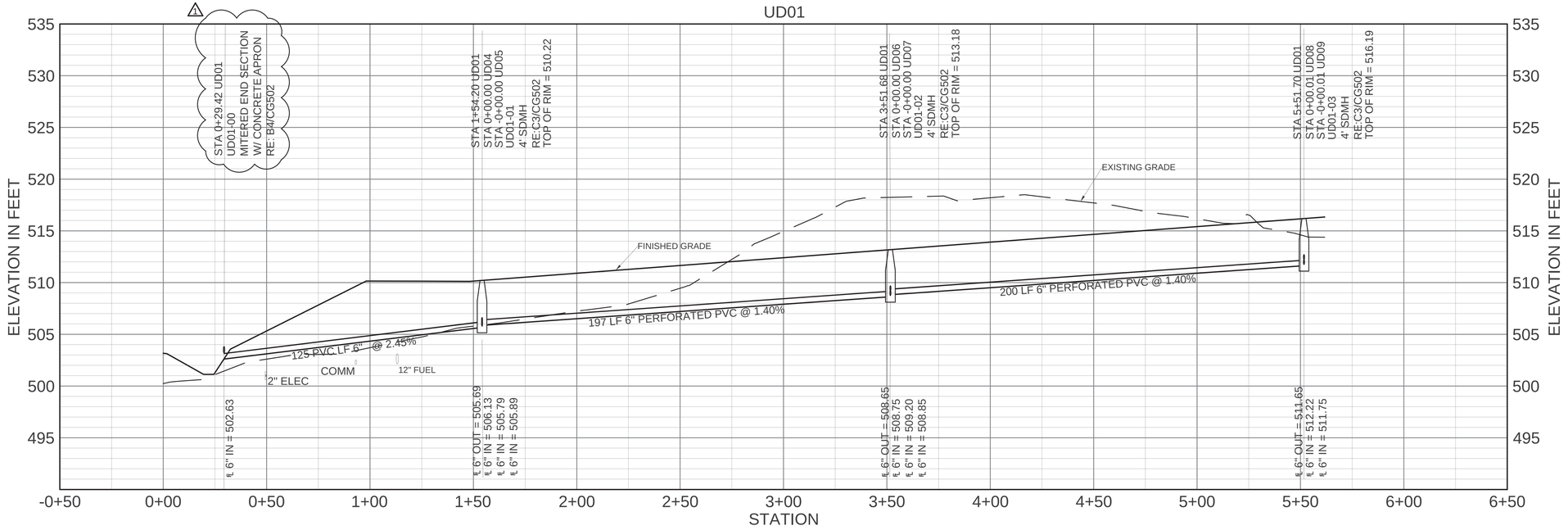

C1 DRAINAGE PROFILES - UD01
SCALE: HORIZONTAL 1" = 30'
VERTICAL 1" = 6'

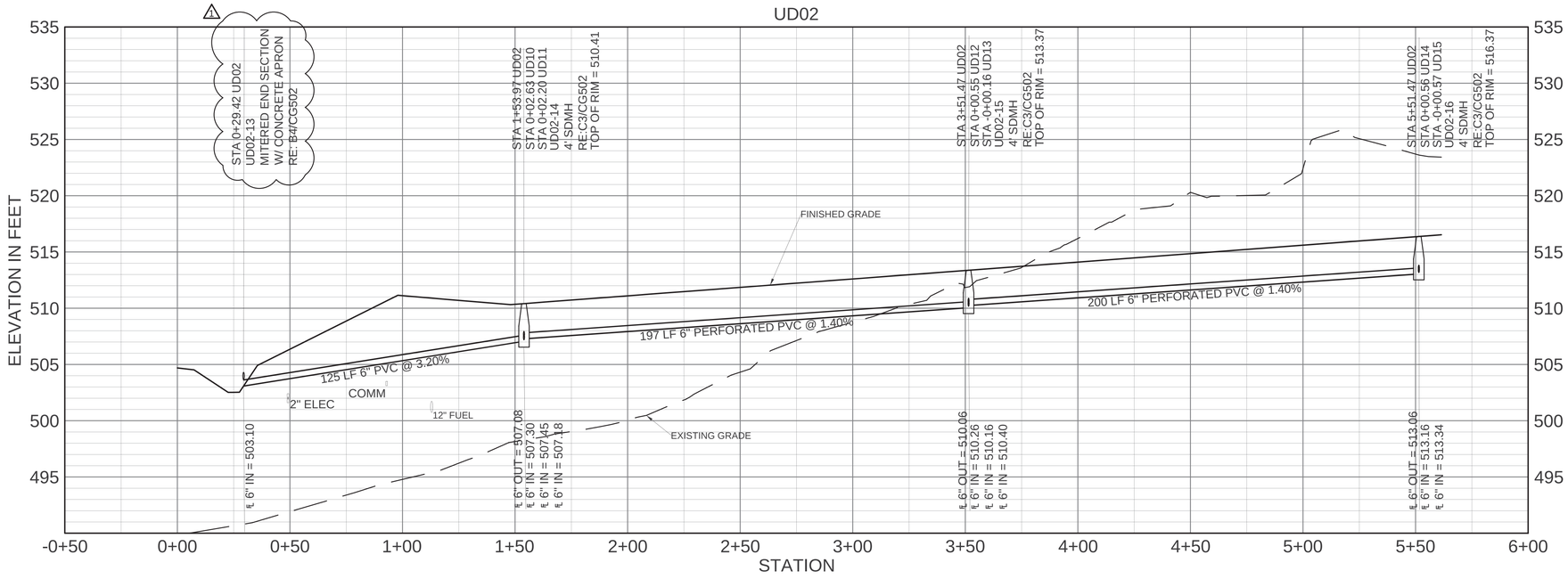

A1 DRAINAGE PROFILES - UD02
SCALE: HORIZONTAL 1" = 30'
VERTICAL 1" = 6'

0 3' 6' 12'
VERTICAL SCALE: 1"=6'

0 15' 30' 60'
HORIZONTAL SCALE: 1"=30'

SYM	DESCRIPTION	DATE
1	AMEND.0003 - ADDED DETAIL REFERENCE	17-APR-26

NAVFAC

STATE OF TEXAS
JENNIFER M. HAYNES
90167
LICENSED
PROFESSIONAL ENGINEER
4/16/2026
TEXAS REGISTERED ENGINEERING FIRM F-2966 SEAL

Jacobs / BURNS McDONNELL
JACOBS/B&M, A JOINT VENTURE
1100 NORTH GLEBE ROAD
SUITE 500
ARLINGTON, VA 22201
A/E Contract No. N62742-20-D-0002
A/E Task Order No. N62742-21F0315
JEG NO. D3430603
A/E INFO

APPROVED
FOR COMMANDER NAVFAC DATE 4/29/2026

ACTIVITY
AFIMSC APPROVAL PER NAVFAC SAT-TO CHECKLIST

SATISFACTORY TO DATE 31 DEC 2025

DES: JMH	DRW: SMC	REV: ATM
PM/DM		KKK
BRANCH MANAGER		SMK
CHIEF ENG/ARCH		SMK
FIRE PROTECTION		RO

DEPARTMENT OF THE NAVY
NAVAL FACILITIES ENGINEERING SYSTEMS COMMAND
NAVFAC PACIFIC
NAVAL FACILITIES ENGINEERING SYSTEMS COMMAND ~ PACIFIC
JOINT REGION MARIANAS (JRM)
ANDERSEN AIR FORCE BASE
GUAM

FY24 AJJY183012 (P-012),
PDI: NORTH AIRCRAFT PARKING RAMP

DRAINAGE PROFILES

SCALE: AS SHOWN
EPROJECTS NO.: 1665555
CONSTR CONTROL NO.
NAVFAC DRAWING NO. 17361848
SHEET 225 OF 377

CG205

REDESIGN FINAL SUBMITTAL

IF SHEET IS LESS THAN 22" X 34"
REDUCED PRINT. USE GRAPHIC SCALES

FILE NAME: U:\BLDG\NAVFAC Pacific\D3430603 - P-012 North Aircraft Parking Ramp\700 Working Documents\740 Sheets\740.01 Civil\P012_1665555_CG205.dwg
LAYOUT NAME: DRAINAGE PROFILES
PLOTTED: 04/16/2026 9:41am
USER: CameroS

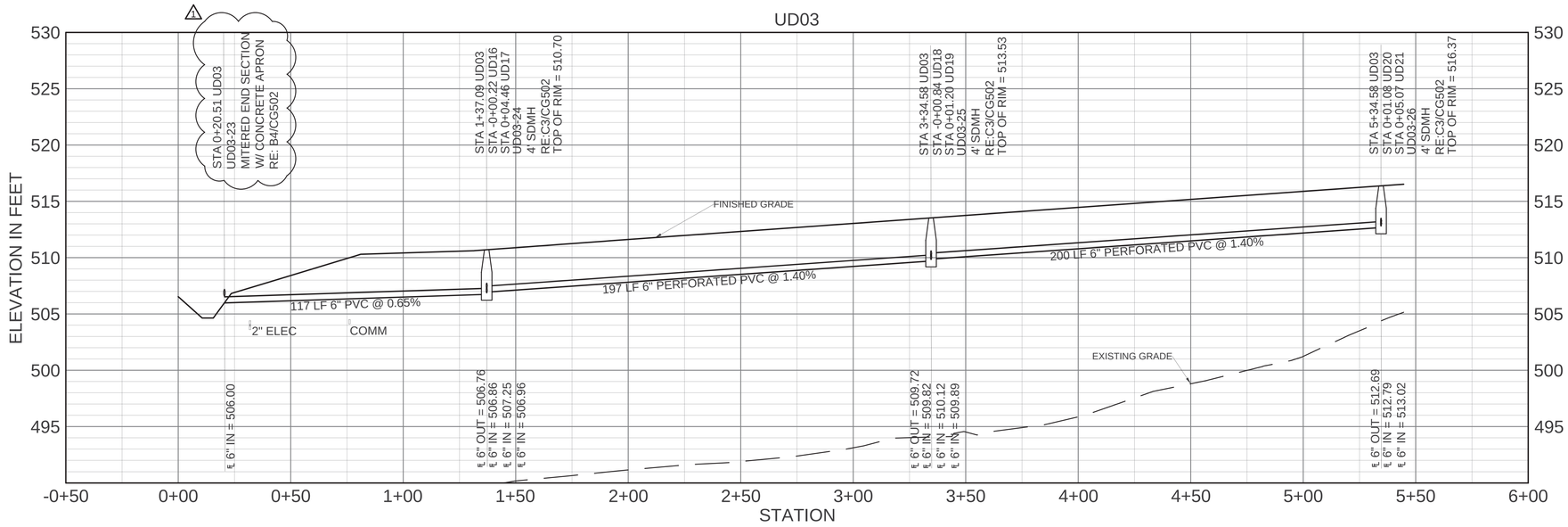

A1 DRAINAGE PROFILES - UD03

SCALE: HORIZONTAL 1" = 30'
VERTICAL 1" = 6'

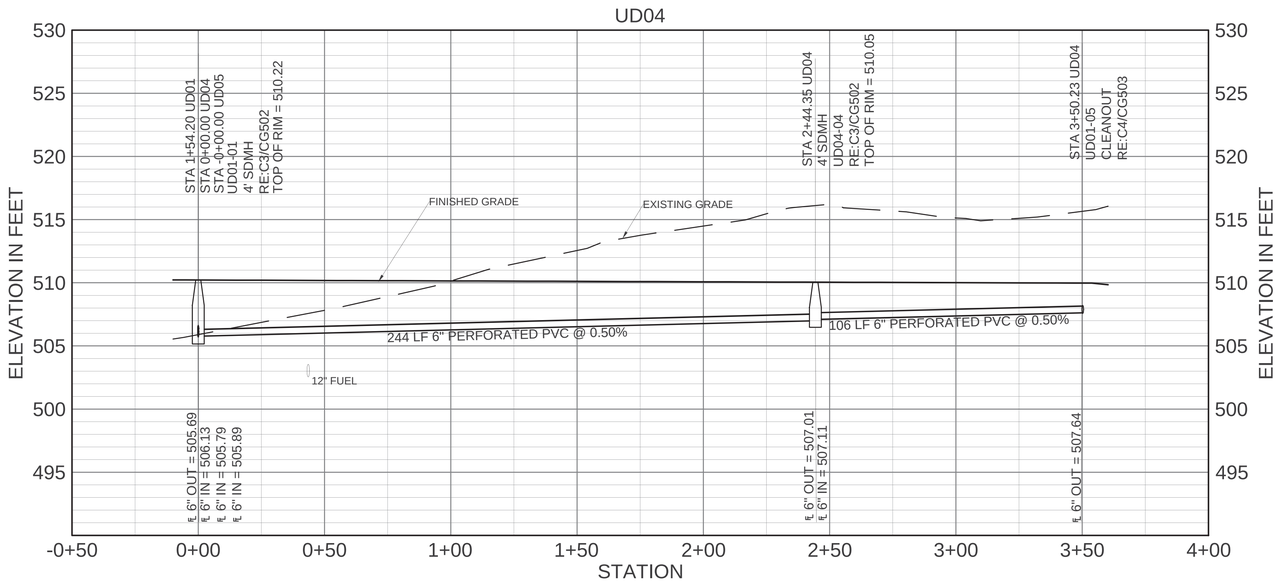

C1 DRAINAGE PROFILES - UD04

SCALE: HORIZONTAL 1" = 30'
VERTICAL 1" = 6'

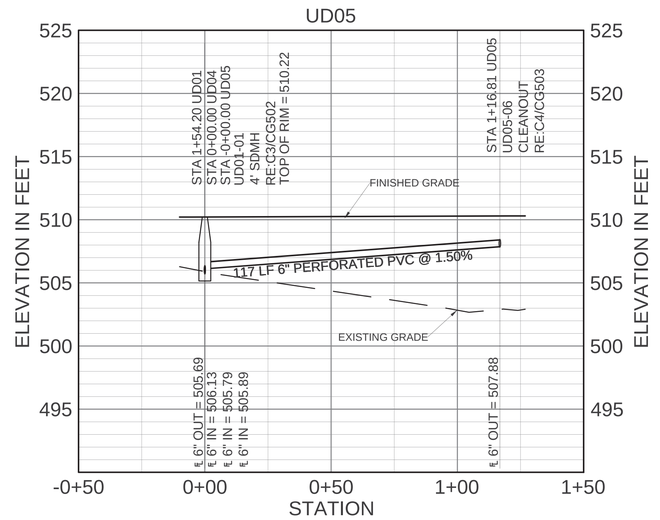

C4 DRAINAGE PROFILES - UD05

SCALE: HORIZONTAL 1" = 30'
VERTICAL 1" = 6'

0 3' 6' 12'
VERTICAL SCALE: 1"=6'

0 15' 30' 60'
HORIZONTAL SCALE: 1"=30'

SYM	DESCRIPTION	DATE
1	AMEND.0003 - ADDED DETAIL REFERENCE	17-APR-26

NAVFAC

STATE OF TEXAS
JENNIFER M. HAYNES
90167
LICENSED
PROFESSIONAL ENGINEER
4/16/2026
TEXAS REGISTERED ENGINEERING FIRM F-2966 SEAL

Jacobs / BURNS MCDONNELL
JACOBS/B&M, A JOINT VENTURE
1100 NORTH GLEBE ROAD
SUITE 500
ARLINGTON, VA 22201

A/E Contract No. N62742-20-D-0002
A/E Task Order No. N6274221F0315
JCG NO. 0343/0603
A/E INFO

APPROVED
FOR COMMANDER NAVFAC DATE 4/29/2026

ACTIVITY
AFIMSC APPROVAL PER NAVFAC SAT-TO CHECKLIST

SATISFACTORY TO DATE 31 DEC 2025

DES:	JMH	DRW:	SMC	REV:	ATM
PM/DM					KKK
BRANCH MANAGER					SMK
CHIEF ENG/ARCH					SMK
FIRE PROTECTION					RO

DEPARTMENT OF THE NAVY
NAVFAC PACIFIC
NAVAL FACILITIES ENGINEERING SYSTEMS COMMAND
NAVAL FACILITIES ENGINEERING SYSTEMS COMMAND – PACIFIC
JOINT REGION MARIANAS (JRM)
ANDERSEN AIR FORCE BASE
GUAM

FY24 AJJY183012 (P-012),
PDI: NORTH AIRCRAFT PARKING RAMP

DRAINAGE PROFILES

SCALE: AS SHOWN
EPROJECTS NO.: 1665555
CONSTR CONTROL NO.
NAVFAC DRAWING NO. 17361849
SHEET 226 OF 377

CG206

REDESIGN FINAL SUBMITTAL

IF SHEET IS LESS THAN 22" X 34"
REDUCED PRINT. USE GRAPHIC SCALES

FILE NAME: U:\BLDG\NAVFAC Pacific\D3430603 – P-012 North Aircraft Parking Ramp\700 Working Documents\740 Sheets\740.01 Civil\P012_1665555_CG206.dwg
LAYOUT NAME: DRAINAGE PROFILES
PLOTTED: 04/16/2026 9:38am
USER: CamenoS

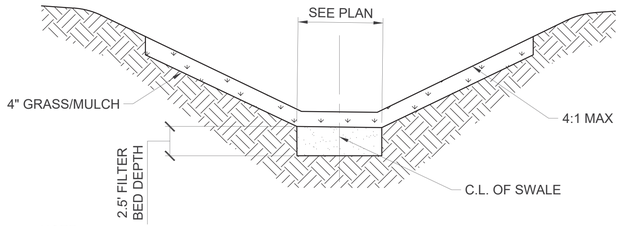

NOTE:

1. THE FILTER BED MEDIA MUST CONSIST OF A MEDIUM SAND (CRUSHED, WASHED LIMESTONE MEETING ASTM C-33 CONCRETE SAND IS ACCEPTABLE). MEDIA USED FOR ORGANIC FILTERS MAY CONSIST OF PEAT/SAND MIX OR LEAF COMPOST. PEAT MUST BE A REED-SEDGE HEMIC PEAT.

D1 DRY SWALE SECTION
SCALE: NTS

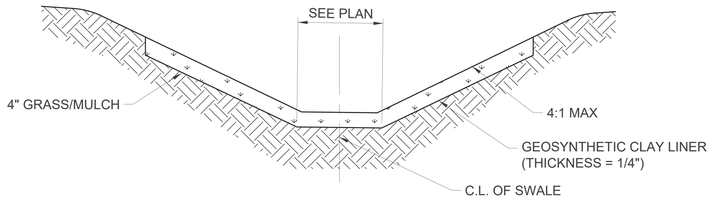

NOTE:

1. SWALE HAS A GEOSYNTHETIC CLAY LINER TO PREVENT GROUND INFILTRATION OF POTENTIALLY FUEL LADEN STORMWATER FROM AIRFIELD SPILLS. SWALE MUST BE IMPERVIOUS.

C1 SWALE SECTION
SCALE: NTS

GEOSYNTHETIC CLAY LINERS (GCL'S) - PRODUCT SPECIFICATIONS

MATERIAL PROPERTY	TEST METHOD	TEST FREQUENCY m^2 (ft^2)	LINER
BENTONITE SWELL INDEX	ASTM D 5890	1 PER 50 TONNES	24 ml/2 g MIN.
BENTONITE FLUID LOSS	ASTM D 5891	1 PER 50 TONNES	18 ml MAX.
BENTONITE MASS/AREA	ASTM D 5993	4,000 (40,000)	3.6 kg/m^2 MIN. (0.75 lb/ft^2)
GCL GRAB STRENGTH	ASTM D 6768	20,000 (200,000)	53 N/cm MARV (30 lb/in) MARV
GCL PEEL STRENGTH	ASTM D 6496	4,000 (40,000)	6.1 N/cm MIN. (3.5 lb/in)
GCL INDEX FLUX	ASTM D 5887	WEEKLY	1 x 10^{-8} m^3/m^2/sec MAX.
GCL HYDRAULIC CONDUCTIVITY	ASTM D 5887	WEEKLY	5 x 10^{-9} cm/sec MAX.
GCL HYDRATED INTERNAL SHEAR STRENGTH	ASTM D 5321 ASTM D 6243	PERIODIC	500 psf (24 kPa) TYP 200 psf

NOTES:
1. BENTONITE MASS/AREA REPORTED AT 0 PERCENT MOISTURE CONTENT.
2. TENSILE STRENGTH TESTING IS PERFORMED IN THE MACHINE DIRECTION USING ASTM D 6768. PEEL STRENGTH TESTING IS PERFORMED USING ASTM D 6496. UPON REQUEST, TENSILE AND PEEL RESULTS CAN BE REPORTED IN ACCORDANCE WITH MODIFIED ASTM D 4632 USING 4 INCH GRIPS.
3. INDEX FLUX AND PERMEABILITY TESTING WITH DEAIRED DISTILLED/DEIONIZED WATER AT 80 PSI (551 KPA) CELL PRESSURE, 77 PSI (531 KPA) HEADWATER PRESSURE AND 75 PSI (517 KPA) TAILWATER PRESSURE. REPORTED VALUE IS EQUIVALENT TO 925 GAL/ACRE/DAY. THIS FLUX VALUE IS EQUIVALENT TO A PERMEABILITY OF 5X10^{-9} CM/SEC FOR TYPICAL GCL THICKNESS. ACTUAL FLUX VALUES VARY WITH FIELD CONDITION PRESSURES. THE LAST 20 WEEKLY VALUES PRIOR THE END OF THE PRODUCTION DATE OF THE SUPPLIED GCL MAY BE PROVIDED.
4. PEAK VALUES MEASURED AT 200 PSF (10 KPA) NORMAL STRESS FOR A SPECIMEN HYDRATED FOR 48 HOURS. SITE-SPECIFIC MATERIALS, GCL PRODUCTS, AND TEST CONDITIONS MUST BE USED TO VERIFY INTERNAL AND INTERFACE STRENGTH OF THE DESIGN.

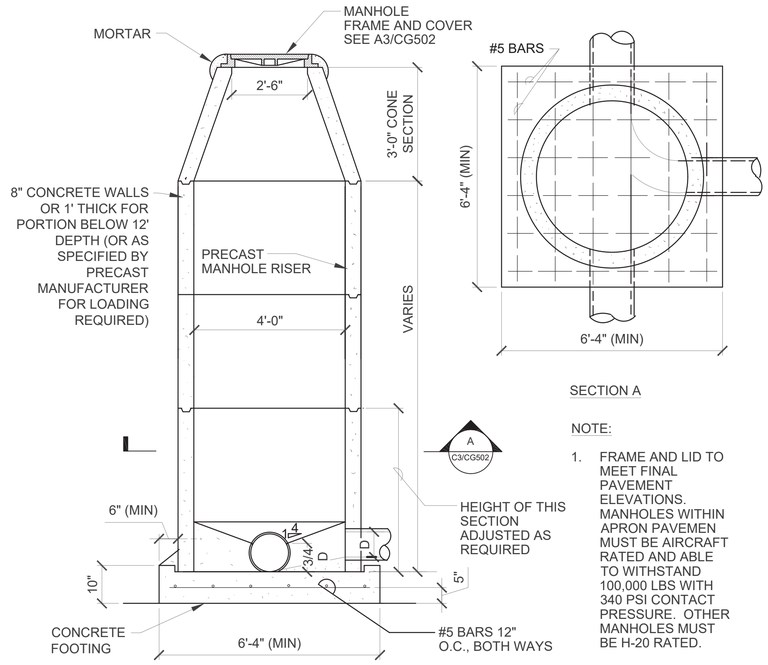

SECTION A

NOTE:

1. FRAME AND LID TO MEET FINAL PAVEMENT ELEVATIONS. MANHOLES WITHIN APRON PAVEMEN MUST BE AIRCRAFT RATED AND ABLE TO WITHSTAND 100,000 LBS WITH 340 PSI CONTACT PRESSURE. OTHER MANHOLES MUST BE H-20 RATED.

C3 STORM DRAIN MANHOLE DETAIL
SCALE: NTS

NOTE:

1. IF MANHOLE IS 12' OR GREATER IN DEPTH, AN ECCENTRIC CONE IS REQUIRED.

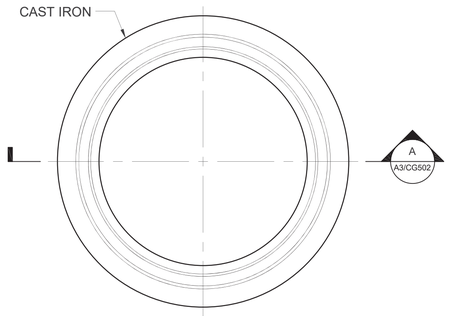

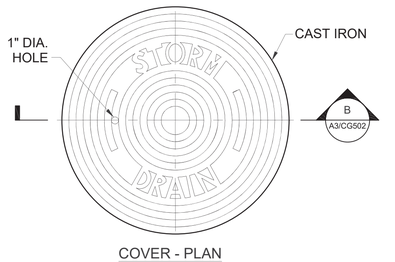

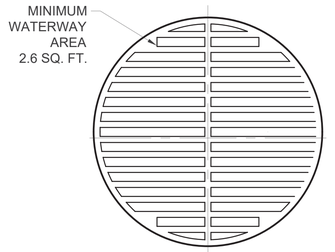

A3 MANHOLE FRAME AND COVER DETAILS
SCALE: NTS

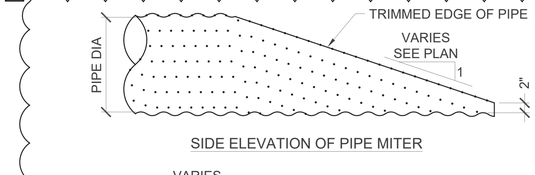

SIDE ELEVATION OF PIPE MITER

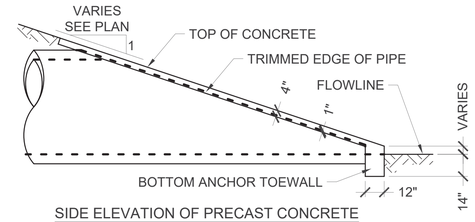

SIDE ELEVATION OF PRECAST CONCRETE

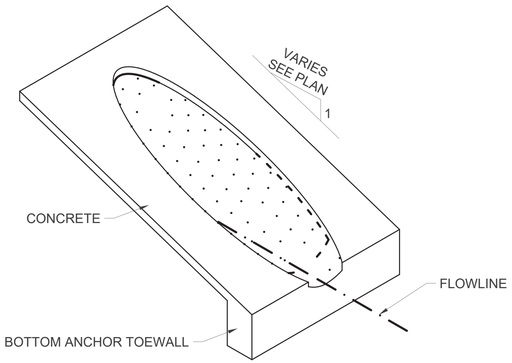

ISOMETRIC VIEW OF TYPICAL INSTALLATION

B4 MITERED END SECTION W/ CONCRETE APRON DETAIL
SCALE: NTS

SYM	DESCRIPTION	DATE
1	AMEND 0003 - ADDED DETAIL	17-APR-26

STATE OF TEXAS
JENNIFER M. HAYNES
90167
LICENSED PROFESSIONAL ENGINEER
4/16/2026
TEXAS REGISTERED ENGINEERING FIRM F-2966 SEAL

Jacobs BURNS MCDONNELL
JACOBS/B&M, A JOINT VENTURE
1100 NORTH GLEBE ROAD
SUITE 500
ARLINGTON, VA 22201
A/E Contract No. N62742-2D-0002
A/E Task Order No. N6274221F0315
JCG NO. 034306003
A/E INFO

APPROVED
FOR COMMANDER NAVFAC DATE 4/29/2026

ACTIVITY
AFIMSC APPROVAL PER NAVFAC SAT-TO CHECKLIST

SATISFACTORY TO DATE 31 DEC 2025

DES:	JMH	DRW:	SMC	REV:	ATM
PM/DM					KKK
BRANCH MANAGER					SMK
CHIEF ENG/ARCH					SMK
FIRE PROTECTION					RO

DEPARTMENT OF THE NAVY
NAVAL FACILITIES ENGINEERING SYSTEMS COMMAND
NAVFAC PACIFIC
ANDERSEN AIR FORCE BASE
NAVAL FACILITIES ENGINEERING SYSTEMS COMMAND – PACIFIC
JOINT REGION MARIANAS (JRM)
GUAM

FY24 AUY183012 (P-012),
PDI: NORTH AIRCRAFT PARKING RAMP

DRAINAGE DETAILS

SCALE:	AS SHOWN
EPROJECTS NO.:	1665555
CONSTR CONTROL NO.	
NAVFAC DRAWING NO.	17361857
SHEET	234 OF 377

CG502

REDESIGN FINAL SUBMITTAL

IF SHEET IS LESS THAN 22" X 34" REDUCED PRINT. USE GRAPHIC SCALES

FILE NAME: U:\BLDG\NAVFAC Pacific\D3430603 - P-012 North Aircraft Parking Ramp\700 Working Documents\740 Sheets\740.01 Civil\P012_1665555_CG502.dwg
LAYOUT NAME: DRAINAGE DETAILS
PLOTTED: 04/16/2026 5:45pm
USER: CameroS

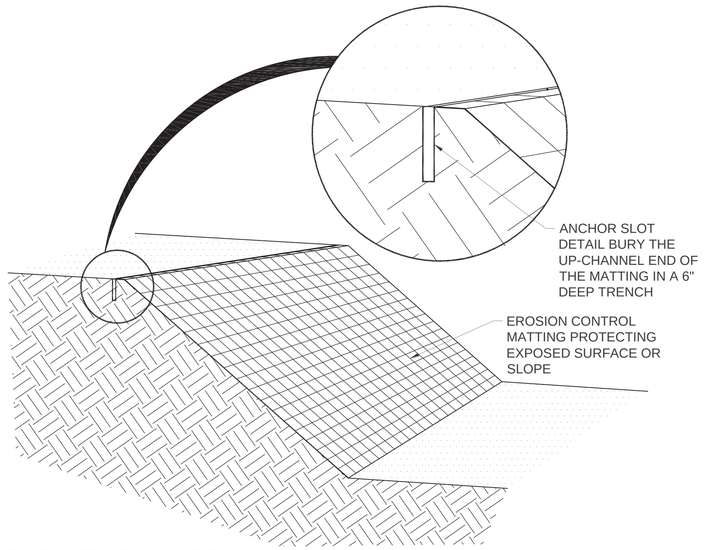

TURF MAT REINFORCEMENT NOTES:

1. BLANKETS MUST BE INSTALLED PARALLEL TO THE DIRECTION OF FLOW OVER THE SURFACE WHICH IS TO BE PROTECTED.
2. THE UP-CHANNEL OF THE BLANKET MUST BE BURIED IN A TRENCH MEASURING 6 INCHES DEEP AND 6 INCHES WIDE FOR THE ENTIRE WIDTH OF THE END. THE SOIL MUST BE BACKFILLED INTO THE TRENCHES AND TAMPED FIRMLY. STAPLES MUST BE PLACED EVERY 12 INCHES ALONG THE END OF THE BLANKET.
3. EDGES OF ADJACENT BLANKETS MUST BE OVERLAPPED A MINIMUM OF 4 INCHES AND MUST BE STAPLED EVERY THREE FEET ALONG THE OVERLAP.
4. WHEN JOINING BLANKETS END TO END, A TRENCH SIMILAR TO THE ONE DUG AT THE BEGINNING OF THE ORIGINAL STRIP MUST BE DUG WITH THE UP-CHANNEL END OF THE STRIP BEING PLACED IN A LIKE MANNER IN THE TRENCH AS THE BEGINNING END OF THE ORIGINAL STRIP. THE END OF THE STRIP BEING FOLDED UNDER AT LEAST 12 INCHES. STAPLES MUST BE INSTALLED AT 12 INCH INTERVALS ALONG THE WIDTH OF THE STRIP NOT MORE THAN 6 INCHES FROM THE TRENCH.
5. IN SITUATIONS WHERE ERODIBLE SOILS, STEEP SLOPES OR HIGH VELOCITY FLOWS ARE ENCOUNTERED, A FOLD OF THE BLANKET MUST BE INSERTED INTO A 6 INCH TRENCH AND TAMPED FIRMLY. STAPLES MUST BE INSTALLED AT 12 INCH INTERVALS ALONG THE TRENCH.
6. STAPLES FOR ANCHORING SOIL STABILIZING MATERIALS MUST BE MADE OF 10 GAUGE WIRE OR HEAVIER. THEY MUST BE 6 TO 10 INCHES IN LENGTH, WITH THE LONGER STAPLES BEING USED IN LOOSE OR UNSTABLE SOILS. THERE MUST BE ONE STAPLE FOR EACH FOUR (4) SQUARE FEET OF BLANKETS TO ASSURE BONDING BETWEEN THE SOIL AND THE BLANKET MATERIAL.

B1 TURF REINFORCEMENT MAT DETAIL
SCALE: NTS

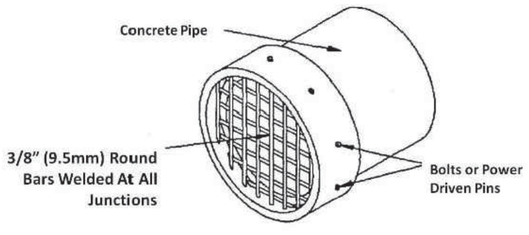

NOTES:

1. FOR CONCRETE PIPES THAT PASS UNDER FENCES, THE GRILL ENDS MUST BE WELDED TO A STEEL RIM THAT FITS SNUGLY OVER THE CONCRETE PIPE.
2. THE RIM AND GRILLWORK MUST BE FASTENED OVER THE CONCRETE PIPE AND BOLTED OR PINNED TO THE RIM OF THE CONCRETE PIPE (AS SHOWN).
3. GRILL ENDS MAY BE EMBEDDED IN A CONCRETE HEADWALL THAT ENCAPSULATES THE CONCRETE PIPE.
4. GRILLS MUST BE PLACED ON THE ATTACK SIDE OF THE FENCE.
5. STEEL USED FOR THE GRILL MUST BE IN ACCORDANCE WITH ASMTA529 AND THE CORROSION PREVENTION CONTROL SECTION OF UFC 4-022-03.

A1 CONCRETE CULVERT GRILL
SCALE: NTS

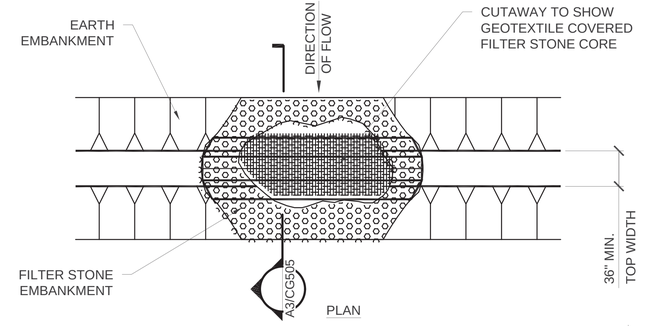

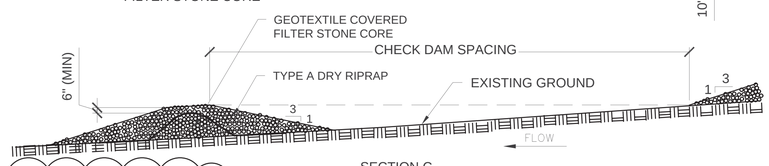

ROCK CHECK DAM NOTES:

1. PROVIDE A 9" PERFORATED PVC RISER PIPE WITH 0.25" DIA. HOLES AT 1.5" VERTICAL SPACING TO DRAIN SETTLING CHAMBERS. DRAIN PIPE MUST GO THROUGH THE ROCK CHECK DAM OUT OF THE SETTLING CHAMBERS WHERE THE OUTLET IS AT LEAST 4" FROM THE BOTTOM OF THE BASIN.
2. FILTER STONE MATERIAL MUST BE 2" TO 15" DIA. (0.5 TO 169 LBS.) DUMPED 20% BY WEIGHT. SHALL BE AT LEAST 4" SIZE (3 LBS.).

C3 ROCK CHECK DAM
SCALE: NTS

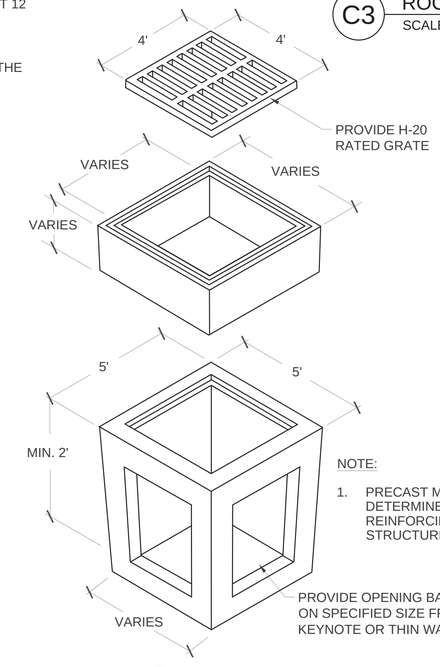

NOTE:

1. PRECAST MANUFACTURER MUST DETERMINE WALL THICKNESS AND REINFORCING REQUIREMENTS. STRUCTURE MUST BE H-20 RATED.

A3 CATCH BASIN
SCALE: NTS

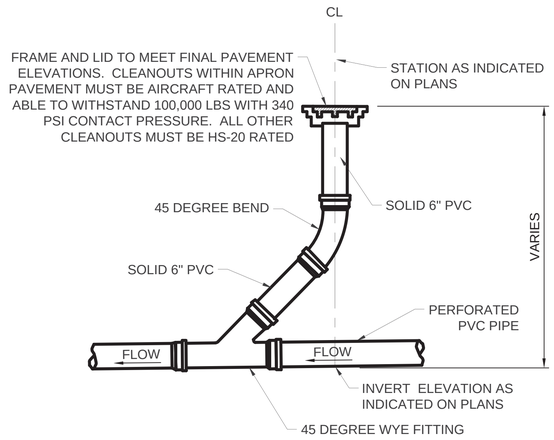

NOTES:

1. WHERE CLEANOUT IS NOT IN PAVEMENT, PROVIDE A 24" X 24" SQUARE PAD MIN. 2" ABOVE ADJACENT GRADE.

C4 TYPICAL SUBDRAIN CLEANOUT
SCALE: NTS

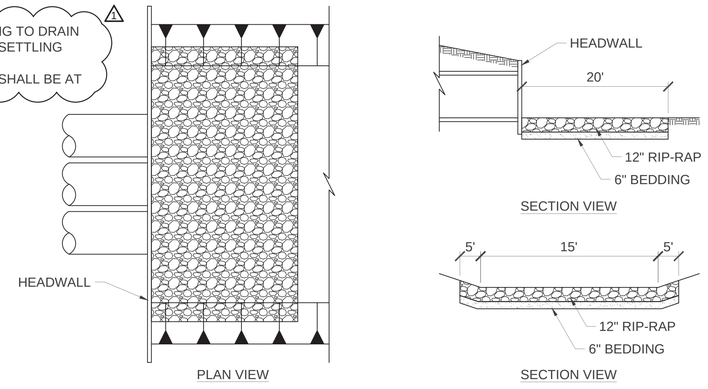

B4 RIP-RAP INSTALLATION DETAIL
SCALE: NTS

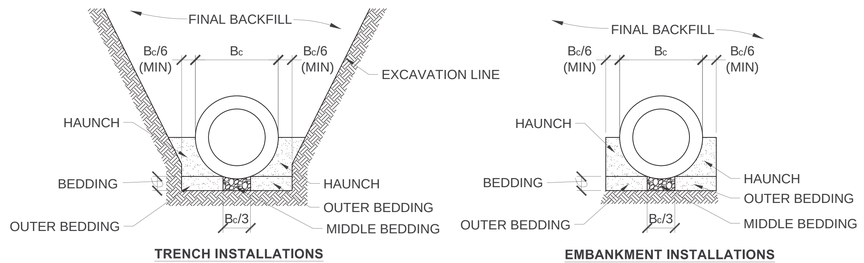

NOTES:

1. MINIMUM BEDDING THICKNESS MUST BE 4 INCHES. MINIMUM BEDDING THICKNESS MUST BE INCREASED TO 6 INCHES IN ROCK CUTS.

A4 CONCRETE CIRCULAR PIPE BEDDING DETAILS
SCALE: NTS

SYM	DESCRIPTION	DATE
1	AMEND.0003 - ADDED RCD NOTES	17-APR-26

NAVFAC

STATE OF TEXAS
JENNIFER M. HAYNES
90167
LICENSED
PROFESSIONAL ENGINEER
4/16/2026
TEXAS REGISTERED ENGINEERING FIRM F-2966 SEAL

Jacobs / BURNS McDONNELL
JACOBS/B&M, A JOINT VENTURE
1100 NORTH GLEBE ROAD
SUITE 500
ARLINGTON, VA 22201
A/E Contract No. N62742-2D-0002
A/E Task Order No. N6274221F0315
JEG NO. 034360I3 A/E INFO

APPROVED
FOR COMMANDER NAVFAC DATE 4/29/2026

ACTIVITY
AFIMSC APPROVAL PER NAVFAC SAT-TO CHECKLIST

SATISFACTORY TO DATE 31 DEC 2025

DES:	JMH	DRW:	SMC	REV:	ATM
PM/DM					KKK
BRANCH MANAGER					SMK
CHIEF ENG/ARCH					SMK
FIRE PROTECTION					RO

DEPARTMENT OF THE NAVY
NAVAL FACILITIES ENGINEERING SYSTEMS COMMAND
NAVFAC PACIFIC
NAVAL FACILITIES ENGINEERING SYSTEMS COMMAND – PACIFIC
JOINT REGION MARIANAS (JRM)
ANDERSEN AIR FORCE BASE
GUAM

FY24 AJY183012 (P-012),
PDI: NORTH AIRCRAFT PARKING RAMP

DRAINAGE DETAILS

SCALE: AS SHOWN
EPROJECTS NO.: 1665555
CONSTR CONTROL NO.
NAVFAC DRAWING NO. 17361858
SHEET 235 OF 377

CG503

REDESIGN FINAL SUBMITTAL

IF SHEET IS LESS THAN 22" X 34" REDUCED PRINT. USE GRAPHIC SCALES

FILE NAME: U:\BLDG\NAVFAC Pacific\D3430603 – P-012 North Aircraft Parking Ramp\700 Working Documents\740 Sheets\740.01 Civil\P012_1665555_CG503.dwg
LAYOUT NAME: DRAINAGE DETAILS
PLOTTED: 04/15/2026 10:35am
USER: CameroS

TABLE OF VARIABLE DIMENSIONS AND QUANTITIES FOR ONE HEADWALL (5)

Slope	Dia of Pipe (D)	Values for One Pipe W	Values for One Pipe Reinf (Lbs) (1)	Values for One Pipe Conc (CY) (2)	Values Must Be Added for Each Addt'l Pipe W	Values Must Be Added for Each Addt'l Pipe Reinf (Lbs) (1)	Values Must Be Added for Each Addt'l Pipe Conc (CY) (2)
3:1	18"	16' - 6"	228	2.2	2' - 8"	19	0.3
	24"	20' - 0"	323	3.0	3' - 7"	33	0.4
	30"	23' - 6"	415	4.0	4' - 4"	40	0.5
	36"	27' - 0"	556	5.7	5' - 1"	46	0.8
4:1	18"	21' - 6"	308	2.9	2' - 8"	19	0.3
	24"	26' - 0"	430	3.9	3' - 7"	34	0.4
	30"	30' - 6"	539	5.2	4' - 4"	40	0.6
	36"	35' - 0"	738	7.5	5' - 1"	47	0.8

TABLE OF CONSTANT DIMENSIONS

Dia of Pipe (D)	G	K (5)	H	T	E
18"	1' - 2"	1' - 0"	3' - 2"	0' - 9"	1' - 9"
24"	1' - 7"	1' - 0"	3' - 8"	0' - 9"	2' - 0"
30"	1' - 10"	1' - 0"	4' - 2"	0' - 9"	2' - 3"
36"	2' - 1"	1' - 0"	4' - 8"	1' - 0"	2' - 6"

TABLE OF REINFORCING STEEL (6)

Bar	Size	Spa	No.
A1	#5	~	2
A2	#5	1' - 6"	~
E	#5	~	2
F	#5	1' - 0"	~

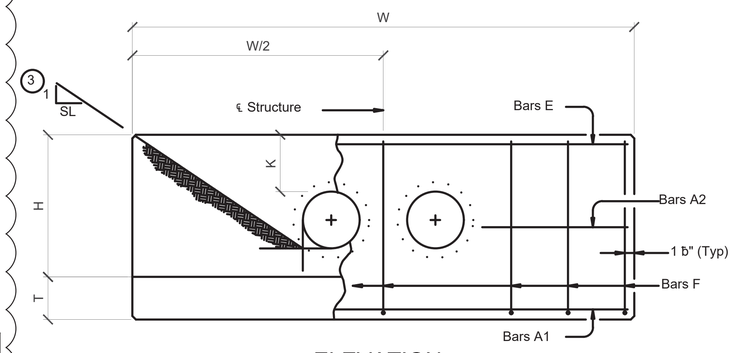

ELEVATION

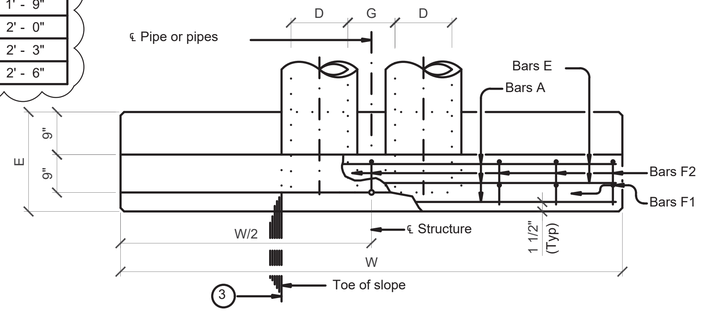

PLAN OF NON-SKEWED PIPES

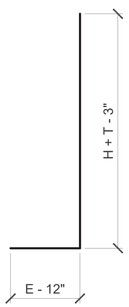

BARS F2

(1) Total quantities include one 3'-1" lap for bars over 60' in length.

(2) Quantities shown are for concrete pipe and will increase slightly for metal pipe installations.

(3) Indicated slope is perpendicular to centerline pipe or pipes.

(4) For vehicle safety, construct curbs no more than 3" above finished grade. Reduce curb heights, if necessary, to meet these requirements. No changes will be made in quantities and no additional compensation will be allowed for this work.

(5) Dimensions shown are usual and maximum.

(6) Quantities shown are for one structure end only (one headwall).

MATERIAL NOTES:
Provide Grade 60 reinforcing steel.
Provide Class C concrete (f'c = 3,600 psi).

GENERAL NOTES:
Designed according to AASHTO LRFD Bridge Design Specifications.
Do not mount bridge rails directly to these culvert headwalls.
This standard may not be used for wall heights, H, exceeding the values shown.

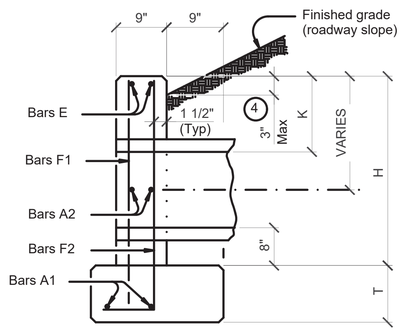

SECTION AT CENTER OF PIPE

Cover dimensions are clear dimensions, unless noted otherwise.
Reinforcing dimensions are out-to-out of bars.

A1 CONCRETE HEADWALL WITH PARALLEL WINGS
SCALE: NTS

TABLE OF VARIABLE DIMENSIONS & QUANTITIES FOR ONE HEADWALL (5)

Slope	Dia of Pipe (D)	30° Skew: Values for One Pipe W	Reinf (Lbs) (1)	Conc (CY) (2)	Values Must Be Added for Each Addt'l Pipe W	Reinf (Lbs) (1)	Conc (CY) (2)
4:1	24"	30' - 0"	499	4.5	4' - 1 ¾"	36	0.5
	36"	40' - 5"	868	8.6	5' - 10 ¾"	49	0.9

TABLE OF CONSTANT DIMENSIONS

Dia of Pipe (D)	G	K (5)	H	T	E
24"	1' - 7"	1' - 0"	3' - 8"	0' - 9"	2' - 0"
36"	2' - 1"	1' - 0"	4' - 8"	1' - 0"	2' - 6"

TABLE OF REINFORCING STEEL (6)

Bar	Size	Spa	No.
A1	#5	~	2
A2	#5	1' - 6"	~
E	#5	~	2
F	#5	1' - 0"	~

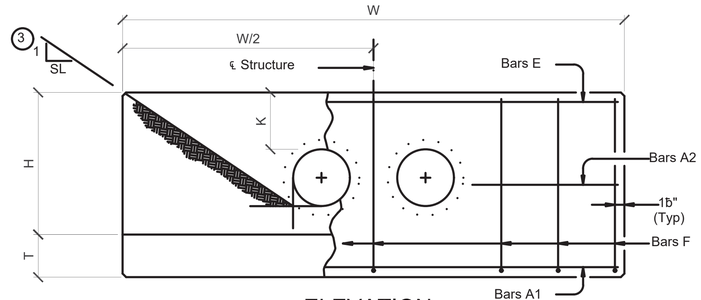

ELEVATION

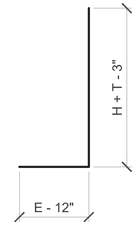

BARS F2

MATERIAL NOTES:
Provide Grade 60 reinforcing steel.
Provide Class C concrete (f'c = 3,600 psi).

GENERAL NOTES:
Designed according to AASHTO LRFD Bridge Design Specifications.
Do not mount bridge rails directly to these culvert headwalls.
This standard may not be used for wall heights, H, exceeding the values shown.

(1) Total quantities include one 3'-1" lap for bars over 60' in length.

(2) Quantities shown are for concrete pipe and will increase slightly for metal pipe installations.

(3) Indicated slope is perpendicular to centerline pipe or pipes.

(4) For vehicle safety, construct curbs no more than 3" above finished grade. Reduce curb heights, if necessary, to meet these requirements. No changes will be made in quantities and no additional compensation will be allowed for this work.

(5) Dimensions shown are usual and maximum.

(6) Quantities shown are for one structure end only (one headwall).

Cover dimensions are clear dimensions, unless noted otherwise.
Reinforcing dimensions are out-to-out of bars.

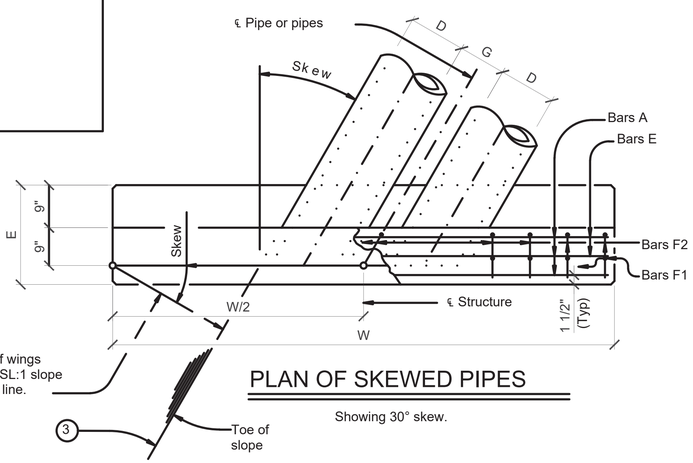

PLAN OF SKEWED PIPES

Showing 30° skew.

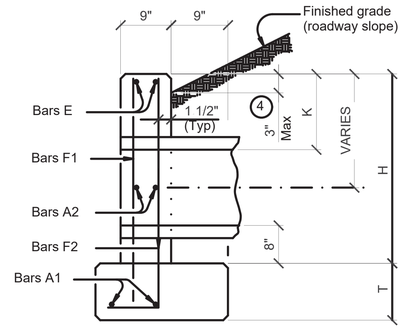

SECTION AT CENTER OF PIPE

A4 CONCRETE HEADWALL WITH PARALLEL WINGS - SKEWED
SCALE: NTS

SYM	DESCRIPTION	DATE
1	AMEND.0003 - UPDATED TABLES	17-APR-26

NAVFAC

STATE OF TEXAS
JENNIFER M. HAYNES
90167
LICENSED
PROFESSIONAL ENGINEER
4/16/2026
TEXAS REGISTERED ENGINEERING FIRM F-2966 SEAL

Jacobs / BURNS McDONNELL
JACOBS/B&M, A JOINT VENTURE
1100 NORTH GLEBE ROAD
SUITE 500
ARLINGTON, VA 22201
A/E Contract No. N62742-20-D-0002
A/E Task Order No. N6274221F0315
JEG NO. 0343060 3
A/E INFO

APPROVED
FOR COMMANDER NAVFAC DATE 4/29/2026

ACTIVITY
AFI/MSC APPROVAL PER NAVFAC SAT-TO CHECKLIST

SATISFACTORY TO DATE 31 DEC 2025

DES:	JMH	DRW:	SMC	REV:	ATM
PM/DM					KKK
BRANCH MANAGER					SMK
CHIEF ENG/ARCH					SMK
FIRE PROTECTION					RO

DEPARTMENT OF THE NAVY
NAVAL FACILITIES ENGINEERING SYSTEMS COMMAND
NAVFAC PACIFIC
NAVAL FACILITIES ENGINEERING SYSTEMS COMMAND - PACIFIC
JOINT REGION MARIANAS (JRM)
ANDERSEN AIR FORCE BASE
GUAM

FY24 AJJY183012 (P-012)
PDI: NORTH AIRCRAFT PARKING RAMP

DRAINAGE DETAILS

SCALE: AS SHOWN
EPROJECTS NO.: 1665555
CONSTR CONTROL NO.
NAVFAC DRAWING NO. 17361859
SHEET 236 OF 377

CG504

REDESIGN FINAL SUBMITTAL

IF SHEET IS LESS THAN 22" X 34"
REDUCED PRINT. USE GRAPHIC SCALES

FILE NAME: U:\BLDG\NAVFAC Pacific\0343060 - P-012 North Aircraft Parking Ramp\700 Working Documents\740 Sheets\740.01 Civil\P012_1665555_CG504.dwg
LAYOUT NAME: DRAINAGE DETAILS
PLOTTED: 04/14/2026 4:51 pm
USER: CameronS

STA 0+10.00, WL01
1- AIR RELEASE VALVE
RE: A1/CU502
N:687005.91
E:385461.15

1- 12" GATE VALVE
RE: C4/CU502
N:686998.81
E:385469.73

STA 0+05.00, WL01
1- 10" GATE VALVE
RE: C4/CU502
N:687001.35
E:385463.19

STA -0+00.00, WL01
1- 12" X 12" X 10" TEE
N:686996.78
E:385465.23

AREA 6
AREA 1
AREA 1
AREA 1
AREA 1
AREA 6
AREA 1
AREA 1
AREA 2
TAXILANE L2
TAXILANE D LOOP
TAXILANE L2
AREA 1
AREA 1

A1 UTILITY PLAN - AREA 1
SCALE: 1" = 30'

GENERAL NOTES

A	REFER TO SHEET ES101 - ES104 FOR SITE LIGHTING INFORMATION.
B	HORIZONTAL BENDS AND TEES REQUIRE THRUST BLOCKS

KEYNOTES

LEGEND

- LIMITS OF DISTURBANCE
- F — FIRE LINE
- C_X EXISTING UNDERGROUND COMM.
- W_X EXISTING WATERLINE
- GATE VALVE, RE: C4/CU502
- TEE
- CB CATCH BASIN, RE: A3/CG503
- EXISTING ELECTRICAL MANHOLE

SYM	DESCRIPTION	DATE
1	AMEND.0003 - REVISED GENERAL NOTES	17-APR-26

NAVFAC

STATE OF TEXAS
JENNIFER M. HAYNES
90167
LICENSED
PROFESSIONAL ENGINEER
4/16/2026
TEXAS REGISTERED ENGINEERING FIRM F-2966 SEAL

Jacobs / BURNS McDONNELL
JACOBS/B&M, A JOINT VENTURE
1100 NORTH GLEBE ROAD
SUITE 500
ARLINGTON, VA 22201

A/E Contract No. N62742-2I-D-0002
A/E Task Order No. N6274221F0315
JCG NO. 0343/0603
A/E INFO

APPROVED
FOR COMMANDER NAVFAC DATE 4/29/2026

ACTIVITY
AFIMSC APPROVAL PER NAVFAC SAT-TO CHECKLIST

SATISFACTORY TO DATE 31 DEC 2025

DES:	JMH	DRW:	SMC	REV:	ATM
PM/OM					KKK
BRANCH MANAGER					SMK
CHIEF ENG/ARCH					SMK
FIRE PROTECTION					RO

DEPARTMENT OF THE NAVY
NAVFAC PACIFIC
NAVAL FACILITIES ENGINEERING SYSTEMS COMMAND
NAVAL FACILITIES ENGINEERING SYSTEMS COMMAND – PACIFIC
JOINT REGION MARIANAS (JRM)
ANDERSEN AIR FORCE BASE
GUAM

FY24 AJJY183012 (P-012),
PDI: NORTH AIRCRAFT PARKING RAMP

UTILITY PLAN - AREA 1

AREA 1
KEY PLAN

GRAPHIC SCALE
0 15' 30' 60'
SCALE: 1"=30'

NORTH ARROW
TRUE N

SCALE: AS SHOWN
EPROJECTS NO.: 1665555
CONSTR CONTROL NO.
NAVFAC DRAWING NO. 17361864
SHEET 241 OF 377

CU102

IF SHEET IS LESS THAN 22" X 34" REDUCED PRINT. USE GRAPHIC SCALES

REDESIGN FINAL SUBMITTAL

FILE NAME: U:\BLDG\NAVFAC Pacific\D3430603 – P-012 North Aircraft Parking Ramp\700 Working Documents\740 Sheets\740.01 Civil\P012_1665555_CU102.dwg
LAYOUT NAME: CU102 UTILITY PLAN – AREA 1
PLOTTED: 04/14/2026 8:52am
USER: CameronS

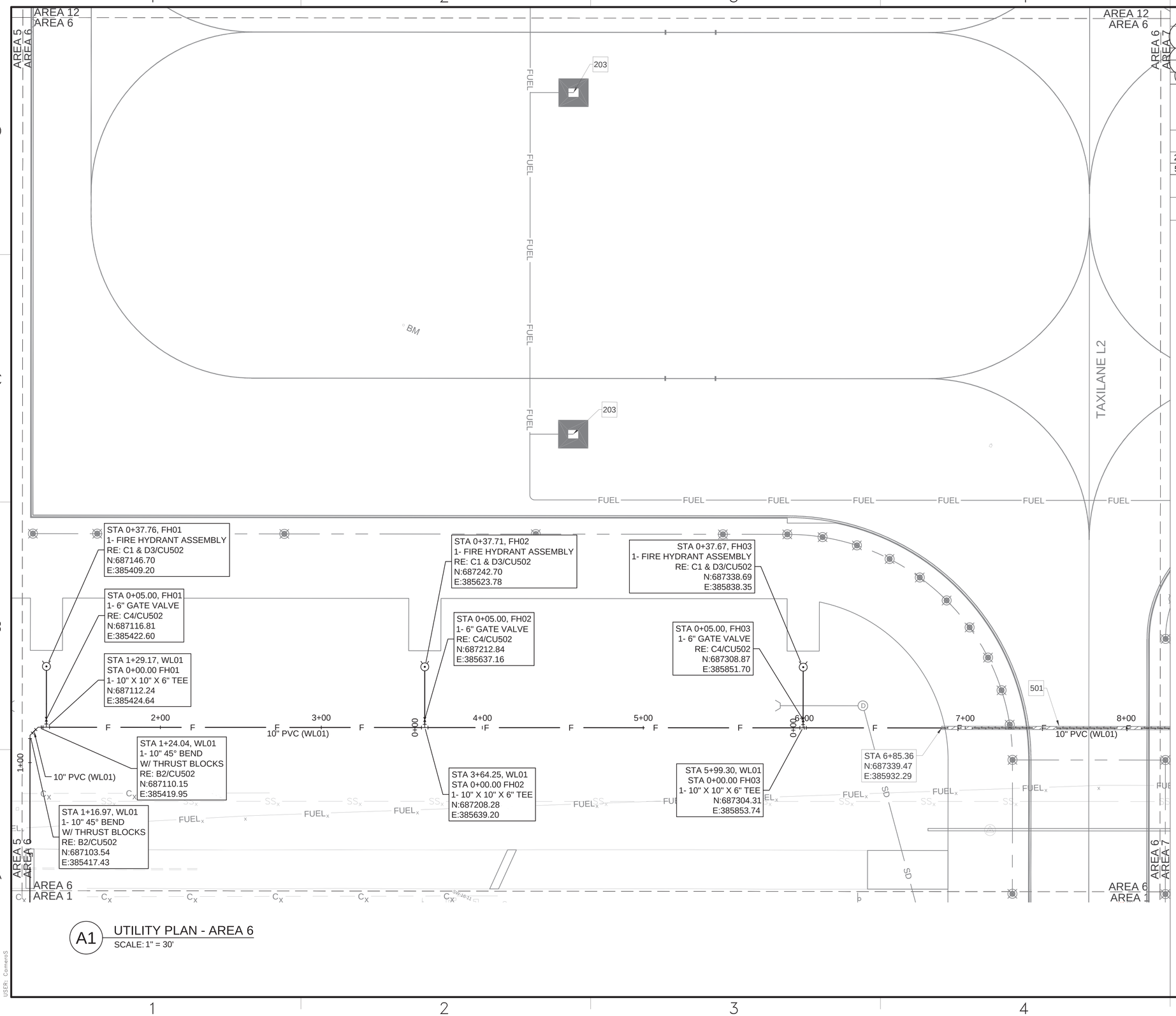

A1 UTILITY PLAN - AREA 6
SCALE: 1" = 30'

GENERAL NOTES

A	REFER TO SHEET ES101 - ES104 FOR SITE LIGHTING INFORMATION.
B	REFER TO SHEET CF101 FOR HYDRANT PIT NUMBERING
C	REFER TO SHEET CF101 FOR FUEL SYSTEM INFORMATION
D	HORIZONTAL BENDS AND TEES REQUIRE THRUST BLOCKS

KEYNOTES

203	FUEL HYDRANT PIT, RE: C3/CF501
501	CONCRETE ENCASED PIPE, RE: B1/CU502

LEGEND

- F — FIRE LINE
- FUEL — FUEL LINE
- FUEL$_x$ — EXISTING UNDERGROUND FUEL LINE
- SS$_x$ — EXISTING SANITARY SEWER
- C$_x$ — EXISTING UNDERGROUND COMM.
- SD — STORM DRAIN
- FUEL HYDRANT PIT, RE: C3/CF501
- TAXILANE LIGHTS
- HIGH MAST LIGHT POLE, RE: ES505
- HEADWALL, RE: A2/CG501
- (D) STORM DRAIN MANHOLE, RE: C3/CG502

SYM	DESCRIPTION	DATE
1	AMEND.0003 - REVISED GENERAL NOTES	17-APR-26

NAVFAC

STATE OF TEXAS
JENNIFER M. HAYNES
90167
LICENSED
PROFESSIONAL ENGINEER
4/16/2026
TEXAS REGISTERED ENGINEERING FIRM F-2966 SEAL

Jacobs / BURNS MCDONNELL
JACOBS/B&M, A JOINT VENTURE
1100 NORTH GLEBE ROAD
SUITE 500
ARLINGTON, VA 22201
A/E Contract No. N62742-20-D-0002
A/E Task Order No. N6274221F0315
JEG NO. 0343/0603
A/E INFO

APPROVED
FOR COMMANDER NAVFAC DATE 4/29/2026

ACTIVITY
AFIMSC APPROVAL PER NAVFAC SAT-TO CHECKLIST

SATISFACTORY TO DATE 31 DEC 2025

DES:	JMH	DRW: SMC	REV: ATM
PM/DM			KKK
BRANCH MANAGER			SMK
CHIEF ENG/ARCH			SMK
FIRE PROTECTION			RO

DEPARTMENT OF THE NAVY
NAVAL FACILITIES ENGINEERING SYSTEMS COMMAND
NAVFAC PACIFIC
NAVAL FACILITIES ENGINEERING SYSTEMS COMMAND – PACIFIC
ANDERSEN AIR FORCE BASE
JOINT REGION MARIANAS (JRM)
GUAM

FY24 AJJY183012 (P-012),
PDI: NORTH AIRCRAFT PARKING RAMP

UTILITY PLAN - AREA 6

SCALE: AS SHOWN
EPROJECTS NO.: 1665555
CONSTR CONTROL NO.
NAVFAC DRAWING NO. 17361865
SHEET 242 OF 377

CU103

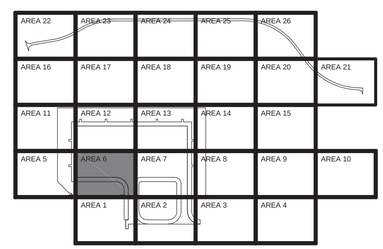

AREA 6
KEY PLAN

GRAPHIC SCALE
0 15' 30' 60'
SCALE: 1"=30'

NORTH ARROW
TRUE N

IF SHEET IS LESS THAN 22" X 34"
REDUCED PRINT. USE GRAPHIC SCALES

REDESIGN FINAL SUBMITTAL

FILE NAME: U:\BLDG\NAVFAC Pacific\D3430603 – P-012 North Aircraft Parking Ramp\700 Working Documents\740 Sheets\740.01 Civil\P012_1665555_CU103.dwg
LAYOUT NAME: CU103 UTILITY PLAN – AREA 6
PLOTTED: 04/14/2026 8:57am
USER: CamreaS

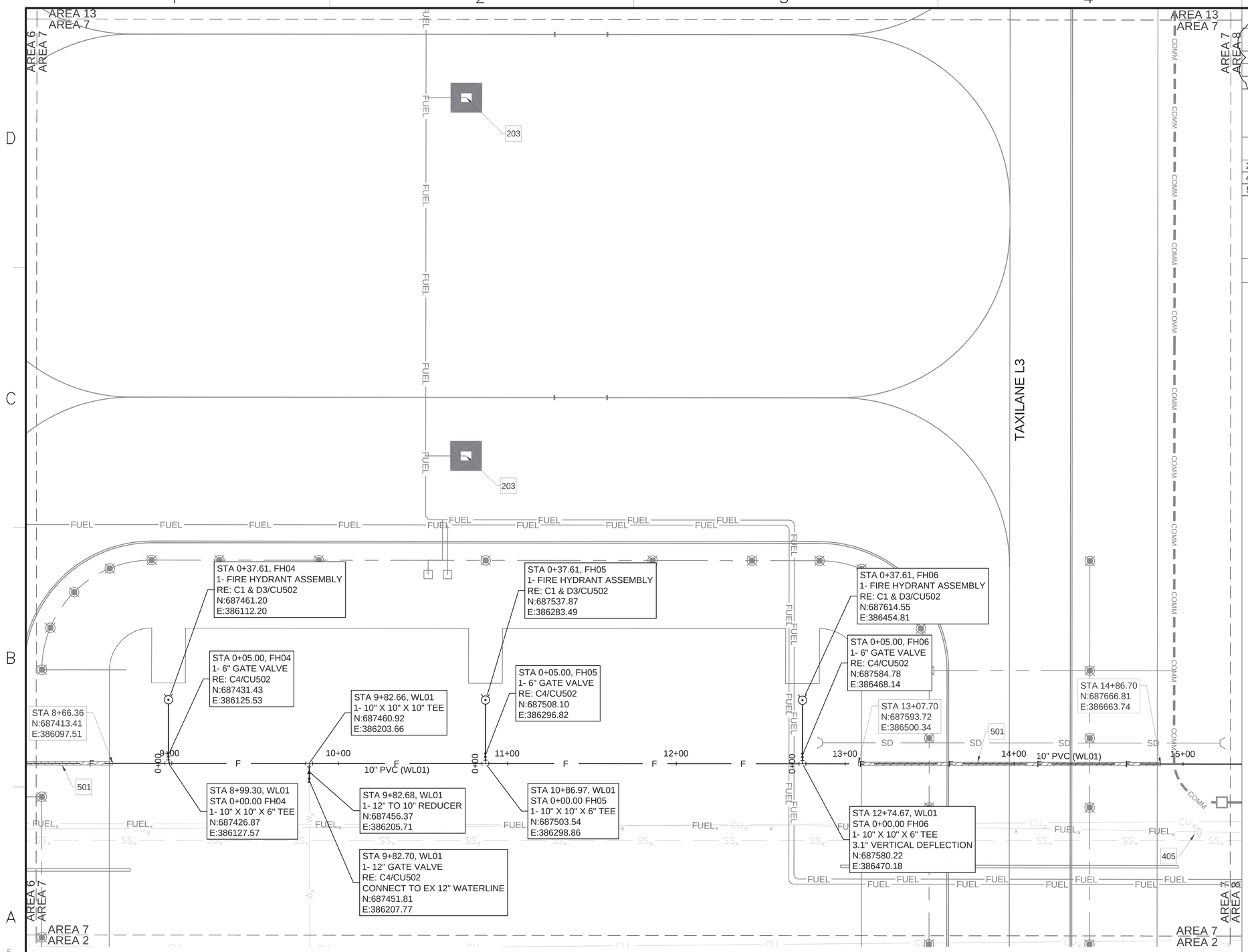

A1 UTILITY PLAN - AREA 7
SCALE: 1" = 30'

GENERAL NOTES

A	REFER TO SHEET ES101 - ES104 FOR SITE LIGHTING INFORMATION.
B	REFER TO SHEET CF101 FOR HYDRANT PIT NUMBERING
C	REFER TO SHEET CF101 FOR FUEL SYSTEM INFORMATION
D	HORIZONTAL BENDS AND TEES REQUIRE THRUST BLOCKS

KEYNOTES

203	FUEL HYDRANT PIT, RE: C3/CF501
405	ADJUST WATER VALVE TO GRADE
501	CONCRETE ENCASED PIPE, RE: B1/CU502

LEGEND

- COMM — UNDERGROUND COMM.
- F — FIRE LINE
- FUEL — FUEL LINE
- SD — STORM DRAIN
- $FUEL_x$ — EXISTING UNDERGROUND FUEL LINE
- SS_x — EXISTING SANITARY SEWER
- W_x — EXISTING WATER LINE
- C_x — EXISTING UNDERGROUND COMM.
- GATE VALVE, RE: C4/CU502
- FUEL HYDRANT PIT, RE: C3/CF501
- ELECTRICAL / COMM MANHOLE
- TAXILANE LIGHTS
- HEADWALL, RE: A2/CG501
- BEND RE: B2/CU502

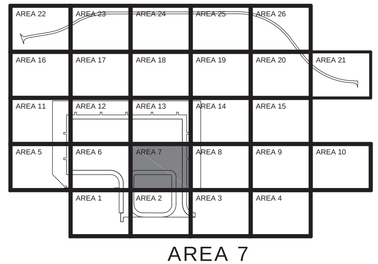

AREA 7
KEY PLAN

GRAPHIC SCALE
0 15' 30' 60'
SCALE: 1"=30'

NORTH ARROW
TRUE N

IF SHEET IS LESS THAN 22" X 34"
REDUCED PRINT. USE GRAPHIC SCALES

SYM	DESCRIPTION	DATE
1	AMEND.0003 - REWSED GENERAL NOTES	17-APR-26

NAVFAC

STATE OF TEXAS
JENNIFER M. HAYNES
90167
LICENSED
PROFESSIONAL ENGINEER
4/16/2026
TEXAS REGISTERED ENGINEERING FIRM F-2966 SEAL

Jacobs / BURNS McDONNELL
JACOBS/B&M, A JOINT VENTURE
1100 NORTH GLEBE ROAD
SUITE 500
ARLINGTON, VA 22201
A/E Contract No. N62742-20-D-0002
A/E Task Order No. N6274221F0315
JEG NO. 0343603
A/E INFO

APPROVED
FOR COMMANDER NAVFAC DATE 4/29/2026

ACTIVITY
AFIMSC APPROVAL PER NAVFAC SAT-TO CHECKLIST

SATISFACTORY TO DATE 31 DEC 2025

DES:	JMH	DRW:	SMC	REV:	ATM
PM/DM					KKK
BRANCH MANAGER					SMK
CHIEF ENG/ARCH					SMK
FIRE PROTECTION					RO

DEPARTMENT OF THE NAVY
NAVAL FACILITIES ENGINEERING SYSTEMS COMMAND
NAVFAC PACIFIC
NAVAL FACILITIES ENGINEERING SYSTEMS COMMAND – PACIFIC
JOINT REGION MARIANAS (JRM)
ANDERSEN AIR FORCE BASE
GUAM

FY24 AJY183012 (P-012),
PDI: NORTH AIRCRAFT PARKING RAMP

UTILITY PLAN - AREA 7

SCALE:	AS SHOWN
EPROJECTS NO.:	1665555
CONSTR CONTROL NO.	
NAVFAC DRAWING NO.	17361866
SHEET	243 OF 377

CU104

REDESIGN FINAL SUBMITTAL

FILE NAME: U:\BLDG\NAVFAC Pacific\0343603 – P-012 North Aircraft Parking Ramp\700 Working Documents\740 Sheets\740.01 Civil\P012_1665555_CU104.dwg
LAYOUT NAME: CU103 UTILITY PLAN – AREA 7
PLOTTED: 04/14/2026 9:37am
USER: CamerasS

AREA 14
AREA 8

AREA 7
AREA 8

AREA 14
AREA 8

AREA 8
AREA 9

STA 33+19.50, W01
STA 15+37.21, WL01
1- 10" GATE VALVE
RE: C4/CU502
N:687687.47
E:386709.81

STA 15+49.28, WL01
1- 12" TO 10" REDUCER
N:687692.41
E:386720.83

12" PVC (WL01)

STA 15+54.28, WL01
CONNECT TO EX
12" WATERLINE
1- 12" 45° BEND
W/ THRUST BLOCKS
RE: B2/CU502
N:687694.45
E:386725.40

10" PVC (WL01)

COMM

FUEL

SS

W

EDGE OF AC PAVEMENT

AREA 8
AREA 3

AREA 8
AREA 3

A1 UTILITY PLAN - AREA 8
SCALE: 1" = 30'

GENERAL NOTES

A	REFER TO SHEET ES101 - ES104 FOR SITE LIGHTING INFORMATION.
B	HORIZONTAL BENDS AND TEES REQUIRE THRUST BLOCKS

LEGEND

- LIMITS OF DISTURBANCE
- F — FIRE LINE
- COMM — UNDERGROUND COMM.
- SS_x — EXISTING SANITARY SEWER
- W_x — EXISTING WATERLINE
- $FUEL_x$ — EXISTING UNDERGROUND FUEL LINE
- X — 7' HIGH SECURITY FENCE, RE: C1/CS505
- FIRE HYDRANT, C1/CU502
- GATE VALVE, RE: C4/CU502
- TEE
- BEND RE: B2/CU502

SYM	DESCRIPTION	DATE
1	AMEND.0003 - REVISED GENERAL NOTES	17-APR-26

NAVFAC

STATE OF TEXAS
JENNIFER M. HAYNES
90167
LICENSED
PROFESSIONAL ENGINEER
4/16/2026
TEXAS REGISTERED ENGINEERING FIRM F-2966 SEAL

Jacobs / BURNS MCDONNELL
JACOBS/B&M, A JOINT VENTURE
1100 NORTH GLEBE ROAD
SUITE 500
ARLINGTON, VA 22201

A/E Contract No. N62742-20-D-0002
A/E Task Order No. N6274221F0315
JEG NO. 0343603

A/E INFO

APPROVED
FOR COMMANDER NAVFAC DATE 4/29/2026

ACTIVITY
AFIMSC APPROVAL PER NAVFAC SAT-TO CHECKLIST

SATISFACTORY TO DATE 31 DEC 2025

DES:	JMH	DRW:	SMC	REV:	ATM
PM/DM					KKK
BRANCH MANAGER					SMK
CHIEF ENG/ARCH					SMK
FIRE PROTECTION					RO

DEPARTMENT OF THE NAVY
NAVFAC PACIFIC
NAVAL FACILITIES ENGINEERING SYSTEMS COMMAND
NAVAL FACILITIES ENGINEERING SYSTEMS COMMAND – PACIFIC
JOINT REGION MARIANAS (JRM)
ANDERSEN AIR FORCE BASE
GUAM

FY24 AJJY183012 (P-012),
PDI: NORTH AIRCRAFT PARKING RAMP

UTILITY PLAN - AREA 8

SCALE: AS SHOWN
EPROJECTS NO.: 1665555
CONSTR CONTROL NO.
NAVFAC DRAWING NO. 17361867
SHEET 244 OF 377

CU105

AREA 22 | AREA 23 | AREA 24 | AREA 25 | AREA 26
AREA 16 | AREA 17 | AREA 18 | AREA 19 | AREA 20 | AREA 21
AREA 11 | AREA 12 | AREA 13 | AREA 14 | AREA 15
AREA 5 | AREA 6 | AREA 7 | AREA 8 | AREA 9 | AREA 10
AREA 1 | AREA 2 | AREA 3 | AREA 4

AREA 8
KEY PLAN

GRAPHIC SCALE
0 15' 30' 60'
SCALE: 1"=30'

NORTH ARROW
TRUE N

IF SHEET IS LESS THAN 22" X 34"
REDUCED PRINT. USE GRAPHIC SCALES

REDESIGN FINAL SUBMITTAL

FILE NAME: U:\BLDG\NAVFAC Pacific\D3430603 – P-012 North Aircraft Parking Ramp\700 Working Documents\740 Sheets\740.01 Civil\P012_1665555_CU105.dwg
LAYOUT NAME: CU104 UTILITY PLAN – AREA 8
PLOTTED: 04/14/2026 9:46am
USER: CamenoS

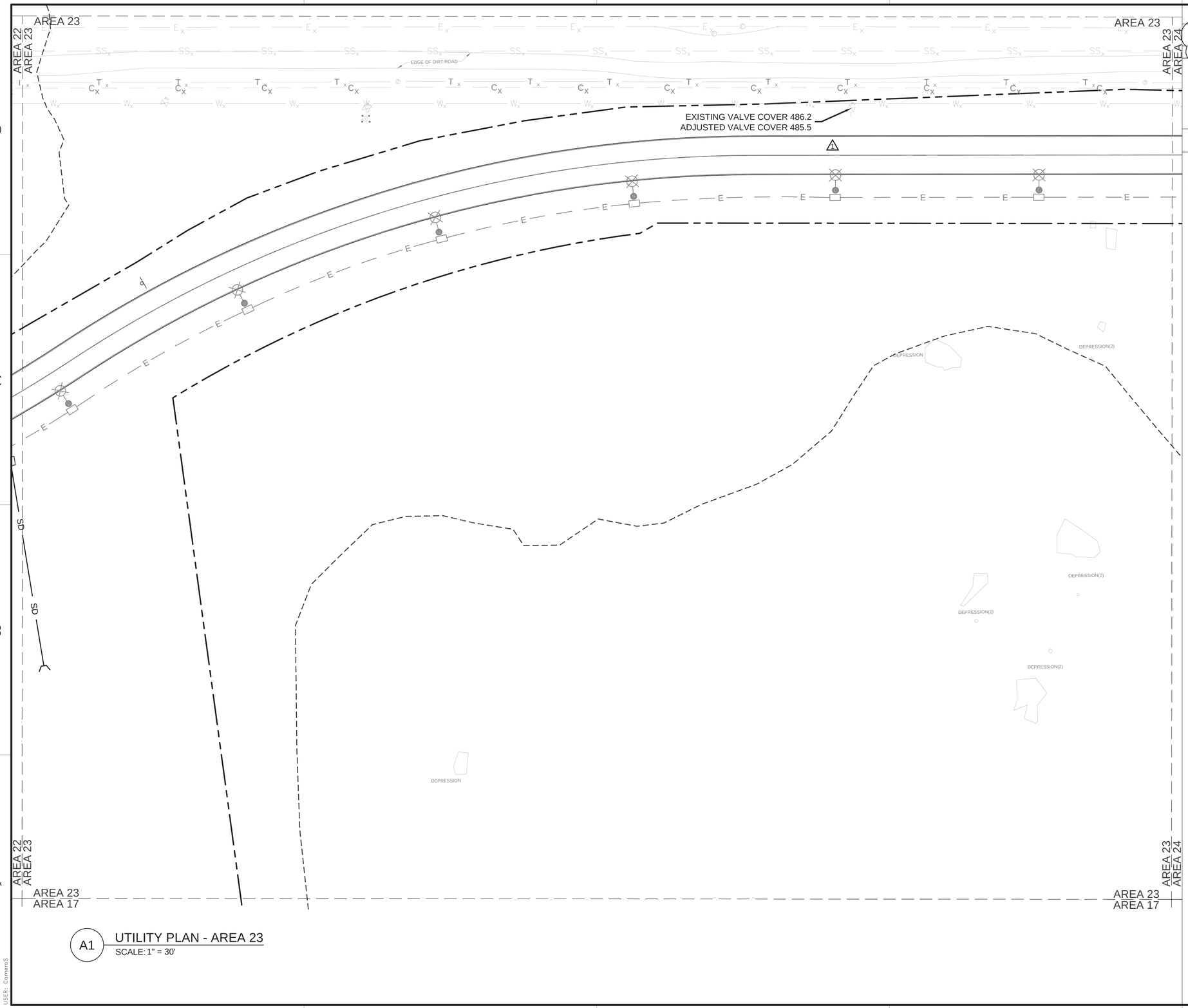

A1 UTILITY PLAN - AREA 23
SCALE: 1" = 30'

GENERAL NOTES

A	REFER TO SHEET ES101 - ES104 FOR SITE LIGHTING INFORMATION.
B	HORIZONTAL BENDS AND TEES REQUIRE THRUST BLOCKS

LEGEND

- LIMITS OF DISTURBANCE
- EXISTING SINKHOLE
- E — UNDERGROUND ELECTRIC
- T_x EXISTING PHONE LINE
- W_x EXISTING WATERLINE
- SS_x EXISTING SANITARY SEWER
- E_x EXISTING UNDERGROUND ELECTRIC
- C_x EXISTING UNDERGROUND COMM.
- EXISTING FIRE HYDRANT
- EXISTING COMMUNICATION MANHOLE
- EXISTING ELECTRICAL MANHOLE
- EXISTING WATER VALVE

SYM	DESCRIPTION	DATE
2	AMEND.0003 - REVISED GENERAL NOTES	17-APR-26
1	AMEND.0002 - REVISED FHs	10-MAR-26

NAVFAC

STATE OF TEXAS
JENNIFER M. HAYNES
90167
LICENSED
PROFESSIONAL ENGINEER
4/16/2026
TEXAS REGISTERED ENGINEERING FIRM F-2966 SEAL

Jacobs / BURNS MCDONNELL
JACOBS/B&M, A JOINT VENTURE
1100 NORTH GLEBE ROAD
SUITE 500
ARLINGTON, VA 22201

A/E Contract No. N62742-2D-0002
A/E Task Order No. N6274221F0315
JCG NO. 0343/0603
A/E INFO

APPROVED
FOR COMMANDER NAVFAC DATE 4/29/2026

ACTIVITY
AFIMSC APPROVAL PER NAVFAC SAT-TO CHECKLIST

SATISFACTORY TO DATE 31 DEC 2025

DES:	JMH	DRW:	SMC	REV:	ATM
PM/DM					KKK
BRANCH MANAGER					SMK
CHIEF ENG/ARCH					SMK
FIRE PROTECTION					RO

DEPARTMENT OF THE NAVY
NAVFAC PACIFIC
NAVAL FACILITIES ENGINEERING SYSTEMS COMMAND
NAVAL FACILITIES ENGINEERING SYSTEMS COMMAND – PACIFIC
JOINT REGION MARIANAS (JRM)
ANDERSEN AIR FORCE BASE
GUAM

FY24 AJJY183012 (P-012),
PDI: NORTH AIRCRAFT PARKING RAMP

UTILITY PLAN - AREA 23

SCALE: AS SHOWN
EPROJECTS NO.: 1665555
CONSTR CONTROL NO.
NAVFAC DRAWING NO. 17361868
SHEET 245 OF 377

CU106

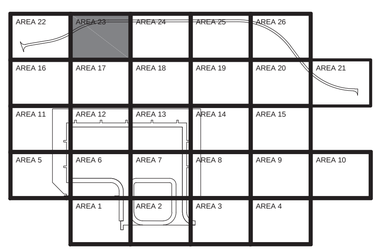

AREA 23
KEY PLAN

GRAPHIC SCALE
0 15' 30' 60'
SCALE: 1"=30'

NORTH ARROW
TRUE N

IF SHEET IS LESS THAN 22" X 34" REDUCED PRINT. USE GRAPHIC SCALES

REDESIGN FINAL SUBMITTAL

FILE NAME: U:\BLDG\NAVFAC Pacific\D3430603 – P-012 North Aircraft Parking Ramp\700 Working Documents\740 Sheets\740.01 Civil\P012_1665555_CU106.dwg
LAYOUT NAME: UTILITY PLAN – AREA 23
PLOTTED: 04/15/2026 11:45am
USER: CamenoS

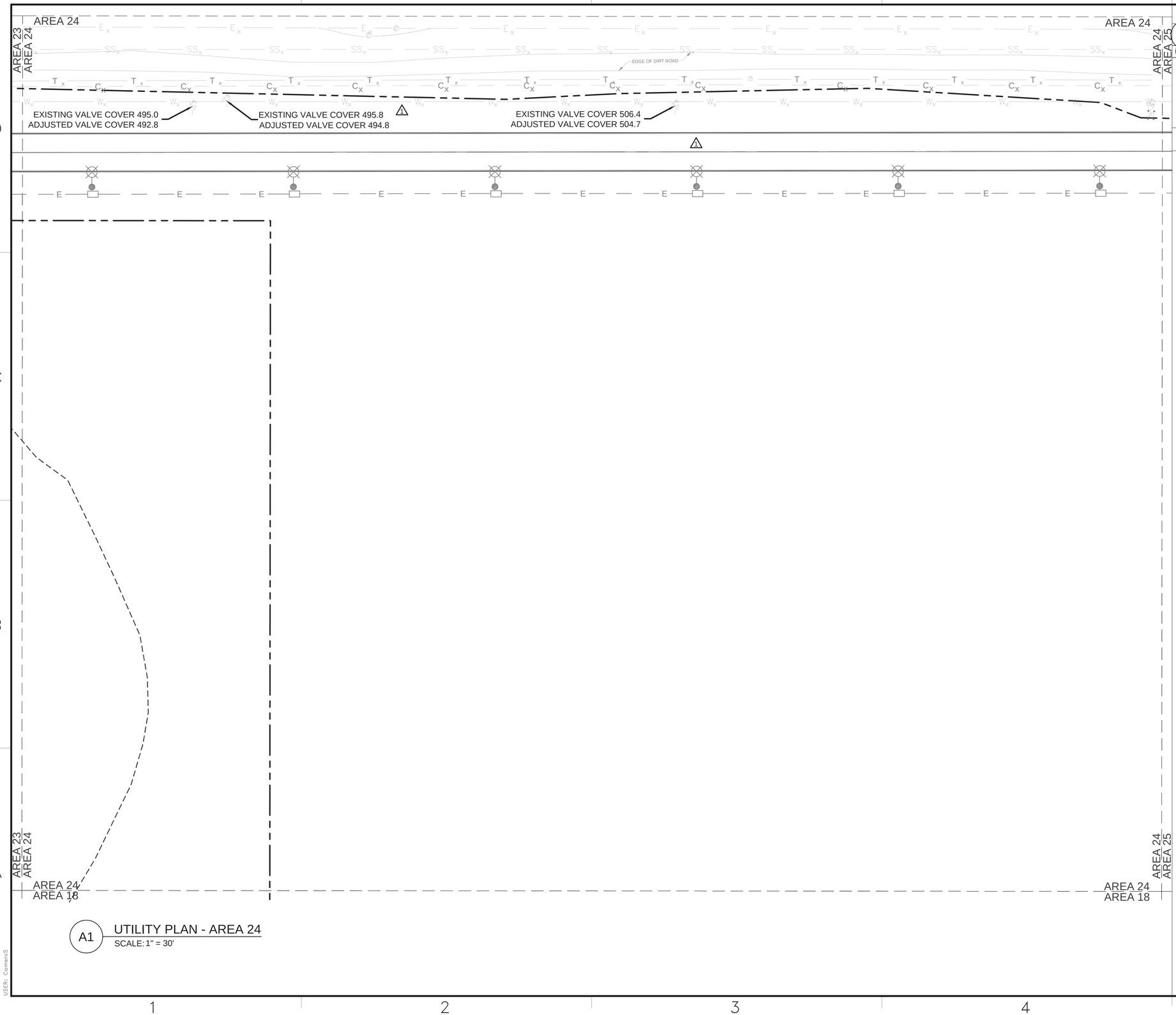

A1 UTILITY PLAN - AREA 24
SCALE: 1" = 30'

GENERAL NOTES

A	REFER TO SHEET ES101 - ES104 FOR SITE LIGHTING INFORMATION.
B	HORIZONTAL BENDS AND TEES REQUIRE THRUST BLOCKS

LEGEND

- LIMITS OF DISTURBANCE
- EXISTING SINKHOLE
- E — UNDERGROUND ELECTRIC
- T_x — EXISTING PHONE LINE
- W_x — EXISTING WATERLINE
- SS_x — EXISTING SANITARY SEWER
- E_x — EXISTING UNDERGROUND ELECTRIC
- C_x — EXISTING UNDERGROUND COMM.
- EXISTING FIRE HYDRANT
- EXISTING COMMUNICATION MANHOLE
- EXISTING ELECTRICAL MANHOLE
- EXISTING WATER VALVE

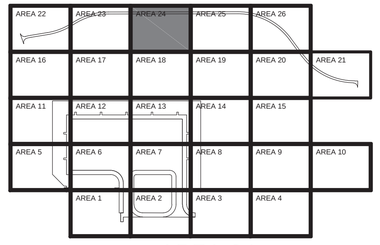

AREA 24
KEY PLAN

GRAPHIC SCALE
0 15' 30' 60'
SCALE: 1"=30'

NORTH ARROW
TRUE N

SYM	DESCRIPTION	DATE
2	AMEND.0003 - REVISED GENERAL NOTES	17-APR-26
1	AMEND.0002 - REVISED FHs	10-MAR-26

NAVFAC

STATE OF TEXAS
JENNIFER M. HAYNES
90167
LICENSED
PROFESSIONAL ENGINEER
4/16/2026
TEXAS REGISTERED ENGINEERING FIRM F-2966 SEAL

Jacobs / BURNS MCDONNELL
JACOBS/B&M, A JOINT VENTURE
1100 NORTH GLEBE ROAD
SUITE 500
ARLINGTON, VA 22201

A/E Contract No. N62742-20-D-0002
A/E Task Order No. N6274221F0315
JEG NO. 0343/0603
A/E INFO

APPROVED
FOR COMMANDER NAVFAC DATE 4/29/2026

ACTIVITY
AFIMSC APPROVAL PER NAVFAC SAT-TO CHECKLIST

SATISFACTORY TO DATE 31 DEC 2025

DES:	JMH	DRW:	SMC	REV:	ATM
PM/DM					KKK
BRANCH MANAGER					SMK
CHIEF ENG/ARCH					SMK
FIRE PROTECTION					RO

DEPARTMENT OF THE NAVY
NAVAL FACILITIES ENGINEERING SYSTEMS COMMAND
NAVFAC PACIFIC
NAVAL FACILITIES ENGINEERING SYSTEMS COMMAND – PACIFIC
JOINT REGION MARIANAS (JRM)
ANDERSEN AIR FORCE BASE
GUAM

FY24 AJJY183012 (P-012),
PDI: NORTH AIRCRAFT PARKING RAMP
UTILITY PLAN - AREA 24

SCALE: AS SHOWN
EPROJECTS NO.: 1665555
CONSTR CONTROL NO.
NAVFAC DRAWING NO. 17325949
SHEET 246 OF 377

CU107

REDESIGN FINAL SUBMITTAL

IF SHEET IS LESS THAN 22" X 34" REDUCED PRINT. USE GRAPHIC SCALES

FILE NAME: U:\BLDG\NAVFAC Pacific\D3430603 – P-012 North Aircraft Parking Ramp\700 Working Documents\740 Sheets\740.01 Civil\P012_1665555_CU107.dwg
LAYOUT NAME: UTILITY PLAN – AREA 24
PLOTTED: 04/15/2026 11:52am
USER: CameroS

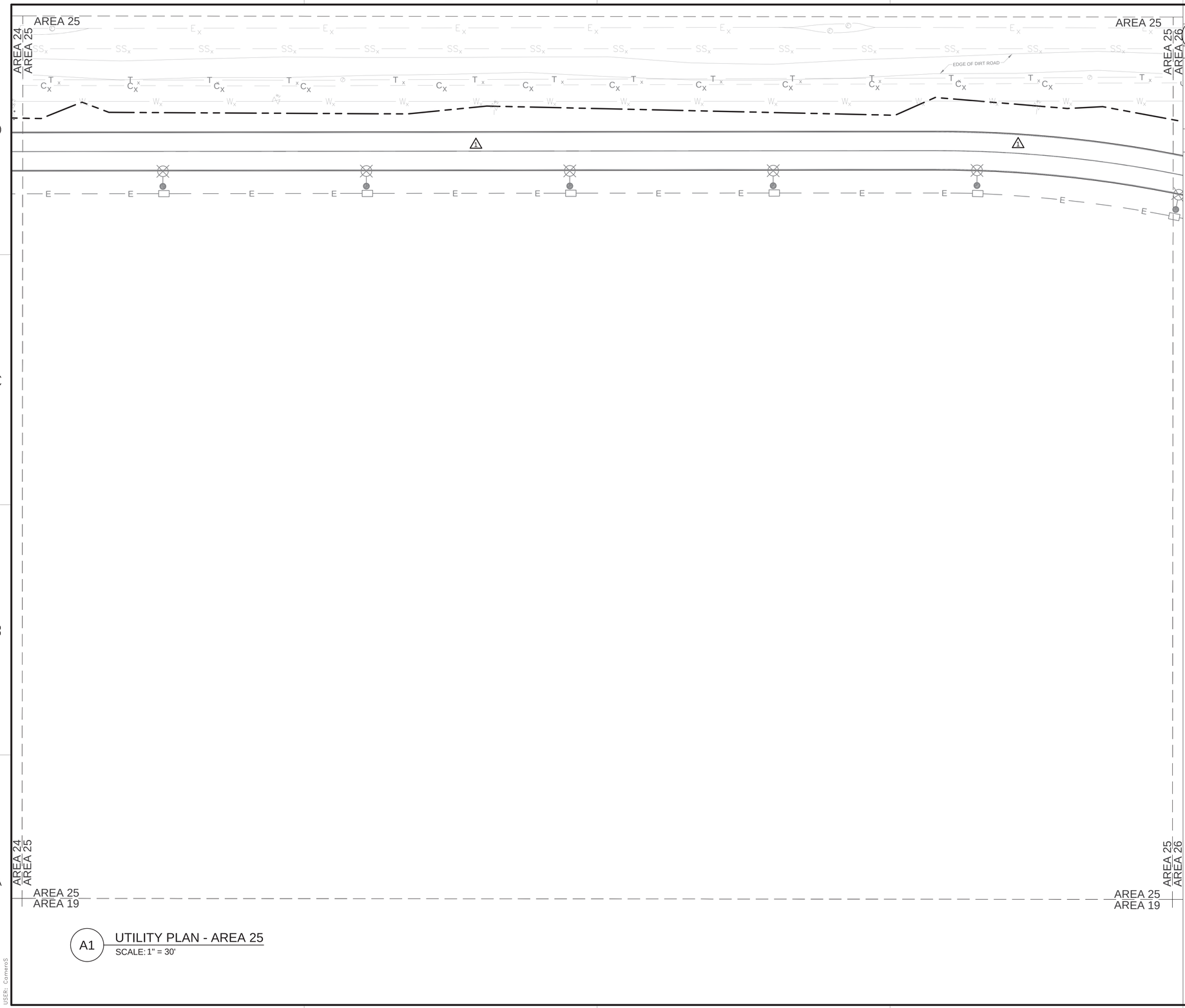

A1 UTILITY PLAN - AREA 25
SCALE: 1" = 30'

GENERAL NOTES

2

A	REFER TO SHEET ES101 - ES104 FOR SITE LIGHTING INFORMATION.
B	HORIZONTAL BENDS AND TEES REQUIRE THRUST BLOCKS

LEGEND

- LIMITS OF DISTURBANCE
- E — UNDERGROUND ELECTRIC
- T_x — EXISTING PHONE LINE
- W_x — EXISTING WATERLINE
- SS_x — EXISTING SANITARY SEWER
- E_x — EXISTING UNDERGROUND ELECTRIC
- C_x — EXISTING UNDERGROUND COMM. 1
- EXISTING COMMUNICATION MANHOLE
- EXISTING ELECTRICAL MANHOLE
- EXISTING WATER VALVE

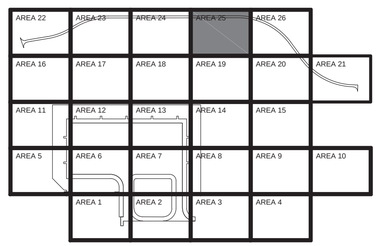

AREA 25
KEY PLAN

GRAPHIC SCALE
0 15' 30' 60'
SCALE: 1"=30'

NORTH ARROW
TRUE N

SYM	DESCRIPTION	DATE
2	AMEND.0003 - REVISED GENERAL NOTES	17-APR-26
1	AMEND.0002 - REVISED FHs	10-MAR-26

NAVFAC

STATE OF TEXAS
JENNIFER M. HAYNES
90167
LICENSED
PROFESSIONAL ENGINEER
4/16/2026
TEXAS REGISTERED ENGINEERING FIRM F-2966 SEAL

Jacobs / BURNS McDONNELL
JACOBS/B&M, A JOINT VENTURE
1100 NORTH GLEBE ROAD
SUITE 500
ARLINGTON, VA 22201

A/E Contract No. N62742-2D-0002
A/E Task Order No. N6274221F0315
JEG NO. 0343/0603
A/E INFO

APPROVED
FOR COMMANDER NAVFAC DATE 4/29/2026

ACTIVITY
AFIMSC APPROVAL PER NAVFAC SAT-TO CHECKLIST

SATISFACTORY TO DATE 31 DEC 2025

DES:	JMH	DRW:	SMC	REV:	ATM
PM/DM					KKK
BRANCH MANAGER					SMK
CHIEF ENG/ARCH					SMK
FIRE PROTECTION					RO

DEPARTMENT OF THE NAVY
NAVFAC PACIFIC
NAVAL FACILITIES ENGINEERING SYSTEMS COMMAND
NAVAL FACILITIES ENGINEERING SYSTEMS COMMAND – PACIFIC
JOINT REGION MARIANAS (JRM)
ANDERSEN AIR FORCE BASE
GUAM

FY24 AJJY183012 (P-012);
PDI: NORTH AIRCRAFT PARKING RAMP

UTILITY PLAN - AREA 25

SCALE: AS SHOWN
EPROJECTS NO.: 1665555
CONSTR CONTROL NO.
NAVFAC DRAWING NO. 17361870
SHEET 247 OF 377

CU108

REDESIGN FINAL SUBMITTAL

IF SHEET IS LESS THAN 22" X 34" REDUCED PRINT. USE GRAPHIC SCALES

FILE NAME: U:\BLDG\NAVFAC Pacific\D3430603 – P-012 North Aircraft Parking Ramp\700 Working Documents\740 Sheets\740.01 Civil\P012_1665555_CU108.dwg
LAYOUT NAME: UTILITY PLAN – AREA 25
PLOTTED: 04/15/2026 11:57am
USER: CamenoS

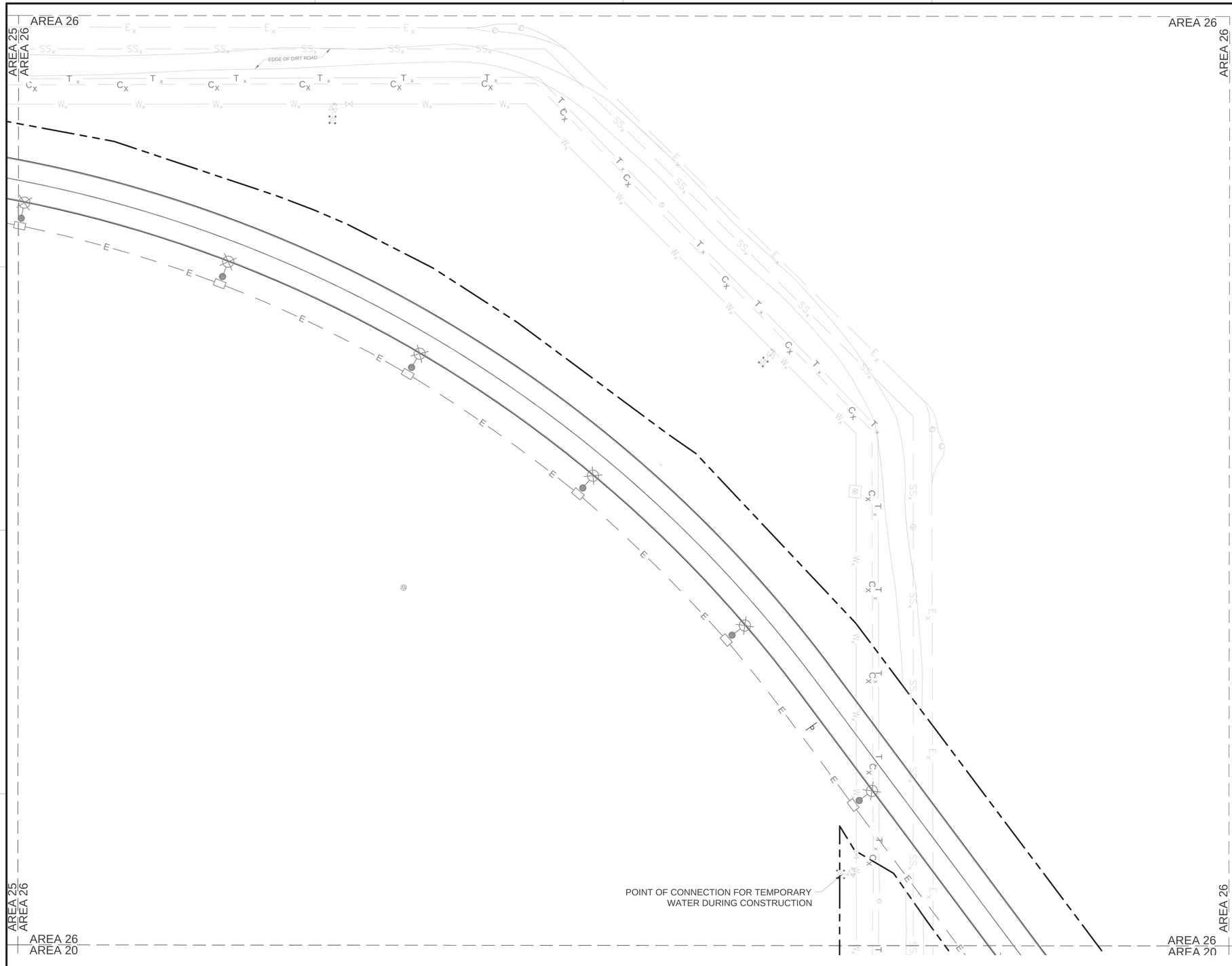

A1 UTILITY PLAN - AREA 26
SCALE: 1" = 30'

GENERAL NOTES

A	REFER TO SHEET ES101 - ES104 FOR SITE LIGHTING INFORMATION.
B	HORIZONTAL BENDS AND TEES REQUIRE THRUST BLOCKS

LEGEND

- LIMITS OF DISTURBANCE
- E — UNDERGROUND ELECTRIC
- T_x EXISTING PHONE LINE
- W_x EXISTING WATERLINE
- SS_x EXISTING SANITARY SEWER
- E_x EXISTING UNDERGROUND ELECTRIC
- C_x EXISTING UNDERGROUND COMM.
- EXISTING COMMUNICATION MANHOLE
- EXISTING ELECTRICAL MANHOLE
- EXISTING WATER VALVE
- EXISTING FIRE HYDRANT
- EXISTING WATER METER
- EXISTING SANITARY SEWER MANHOLE

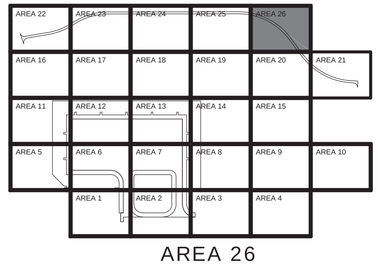

AREA 26
KEY PLAN

GRAPHIC SCALE
0 15' 30' 60'
SCALE: 1"=30'

NORTH ARROW
TRUE N

IF SHEET IS LESS THAN 22" X 34" REDUCED PRINT. USE GRAPHIC SCALES

SYM	DESCRIPTION	DATE
1	AMEND.0003 - REVISED GENERAL NOTES	17-APR-26

JENNIFER M. HAYNES
90167
LICENSED PROFESSIONAL ENGINEER
STATE OF TEXAS
4/16/2026
TEXAS REGISTERED ENGINEERING FIRM F-2966 SEAL

Jacobs / BURNS MCDONNELL
JACOBS/B&M, A JOINT VENTURE
1100 NORTH GLEBE ROAD
SUITE 500
ARLINGTON, VA 22201

A/E Contract No. N62742-2D-0002
A/E Task Order No. N6274221F0315
JEG NO. 034/38003
A/E INFO

APPROVED
FOR COMMANDER NAVFAC DATE 4/29/2026

ACTIVITY
AFIMSC APPROVAL PER NAVFAC SAT-TO CHECKLIST

SATISFACTORY TO DATE 31 DEC 2025

DES:	JMH	DRW:	SMC	REV:	ATM
PM/DM					KKK
BRANCH MANAGER					SMK
CHIEF ENG/ARCH					SMK
FIRE PROTECTION					RO

DEPARTMENT OF THE NAVY
NAVAL FACILITIES ENGINEERING SYSTEMS COMMAND
NAVFAC PACIFIC
NAVAL FACILITIES ENGINEERING SYSTEMS COMMAND – PACIFIC
JOINT REGION MARIANAS (JRM)
ANDERSEN AIR FORCE BASE
GUAM

FY24 AJJY183012 (P-012),
PDI: NORTH AIRCRAFT PARKING RAMP
UTILITY PLAN - AREA 26

SCALE: AS SHOWN
EPROJECTS NO.: 1665555
CONSTR CONTROL NO.
NAVFAC DRAWING NO. 17361871
SHEET 248 OF 377

CU109

REDESIGN FINAL SUBMITTAL

FILE NAME: U:\BLDG\NAVFAC Pacific\D3430603 – P-012 North Aircraft Parking Ramp\700 Working Documents\740 Sheets\740.01 Civil\P012_1665555_CU109.dwg
LAYOUT NAME: UTILITY PLAN – AREA 26
PLOTTED: 04/14/2026 9:29am
USER: CameroS

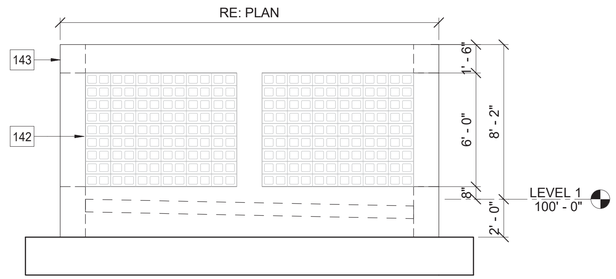

D1 EQUIPMENT YARD SIDE ELEVATION

SCALE 1/4" = 1'-0"

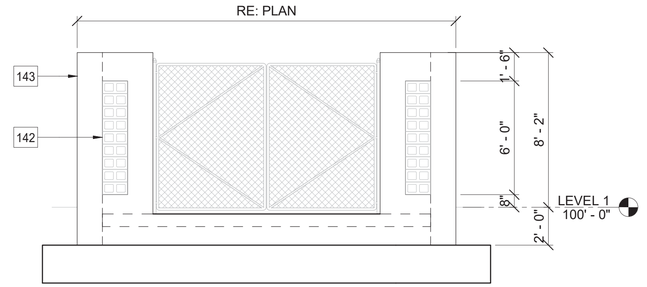

D3 EQUIPMENT YARD FRONT ELEVATION

SCALE 1/4" = 1'-0"

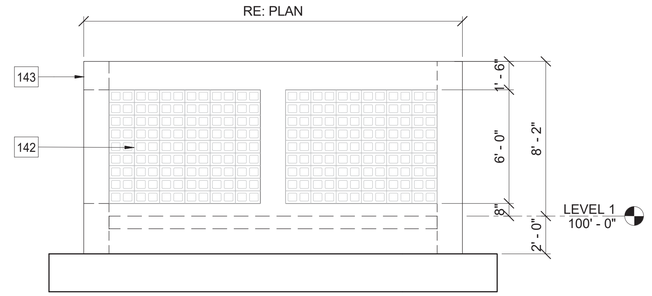

C3 EQUIPMENT YARD BACK ELEVATION

SCALE 1/4" = 1'-0"

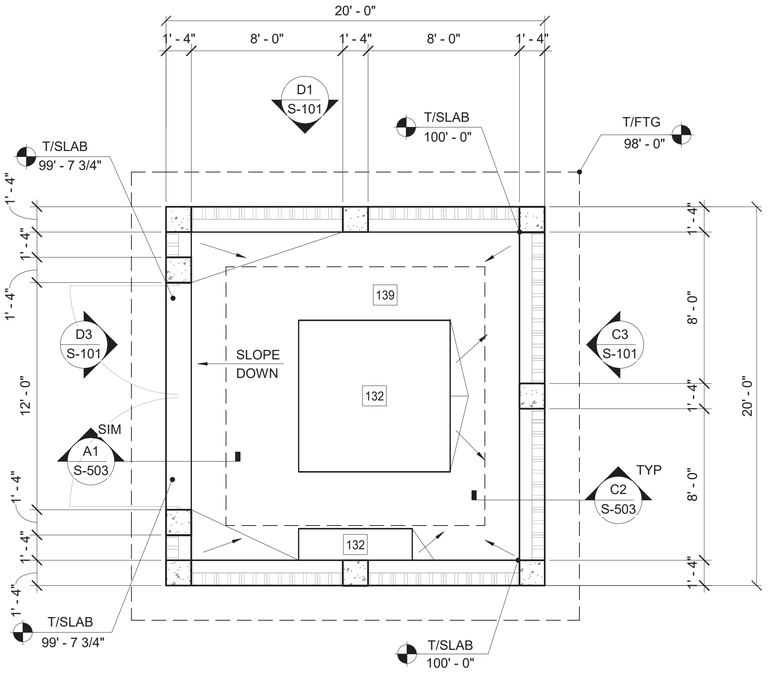

NOTES:
1. REFER TO CIVIL FOR LOCATION, ORIENTATION AND REFERENCE DATUM OF EQUIPMENT YARD

A1 EQUIPMENT YARD - FOUNDATION PLAN

SCALE 1/4" = 1'-0"

GENERAL NOTES - FOUNDATION PLAN

A	COORDINATE WITH CIVIL FOR EQUIPMENT YARD REFERENCE DATUM.
B	REFER TO SHEETS S-001 THROUGH S-002 FOR STRUCTURAL GENERAL NOTES.
C	REFER TO SHEETS S-501 THROUGH S-503 TYPICAL CONCRETE DETAILS.
D	REFER TO ARCHITECTURAL, MECHANICAL, & PLUMBING SHEETS FOR OPENINGS.
E	CENTER FOOTINGS UNDER WALL CENTER LINES UNLESS OTHERWISE NOTED
F	COORDINATE DOOR OPENING LOCATIONS WITH ARCHITECTURAL DRAWINGS.
G	CJ - DENOTES CONTROL/CONSTRUCTION JOINTS RE: C1/S-502

KEYNOTES

132	CONCRETE EQUIPMENT PAD RE: A3/S-501
139	8" THICK CONCRETE SLAB ON GRADE REINFORCED WITH #4 @ 12" ON CENTER, EACH WAY AT MID-DEPTH OF SLAB, OVER 10" AGGREGATE BASE OVER PREPARED SUBGRADE.
142	SIDE TURNED CMU BREEZEBLOCK
143	CAST IN PLACE CONCRETE WALL WITH FLUID APPLIED SILICONE ELASTOMERIC COATING, RE: ARCH

SYM	DESCRIPTION	DATE
1	AMEND.0003 - REMOVE BOLLARDS	17-APRIL-26

NAVFAC

STATE OF TEXAS
ALEX BANNEROT
91686
LICENSED PROFESSIONAL ENGINEER
16 APR 2026
TEXAS REGISTERED ENGINEERING FIRM F-2966 SEAL

Jacobs / BURNS McDONNELL
JACOBS/B&M, A JOINT VENTURE
1100 NORTH GLEBE ROAD
SUITE 500
ARLINGTON, VA 22201
A/E Contract No. N62742-20-D-0002
A/E Task Order No. N6274219T0151
JEG NO. 0340803 A/E INFO

APPROVED
FOR COMMANDER NAVFAC DATE 4/29/2026

ACTIVITY

SATISFACTORY TO DATE 31 DEC 2025

DES:	AB	DRW:	DO	REV:	AS
PM/DM					KKK
BRANCH MANAGER					SMK
CHIEF ENG/ARCH					SMK
FIRE PROTECTION					RO

DEPARTMENT OF THE NAVY
NAVFAC PACIFIC
NAVAL FACILITIES ENGINEERING SYSTEMS COMMAND
NAVAL FACILITIES ENGINEERING SYSTEMS COMMAND ~ PACIFIC
JOINT REGION MARIANAS (JRM)
ANDERSEN AIR FORCE BASE
GUAM

FY24 MCAF P-012/ AUY183012
NORTH AIRCRAFT PARKING RAMP

FOUNDATION PLANS

SCALE: AS SHOWN
EPROJECTS NO.: 1665555
CONSTR CONTROL NO.
NAVFAC DRAWING NO. 17361879
SHEET 256 OF 377

S-101

GRAPHIC SCALE
4 3 2 1 0 4 8
SCALE: 1/4"=1'-0"

NORTH ARROW
TRUE N

IF SHEET IS LESS THAN 22" X 34"
REDUCED PRINT. USE GRAPHIC SCALES

REDESIGN FINAL SUBMITTAL

FILE NAME: U:\BLDG\NAVFAC Pacific\D3430603 – P-012 North Aircraft Parking Ramp\700 Working Documents\730 Models R_20\730.03 Structural\Base\P012-1665555-S-3D.rvt
LAYOUT NAME: FOUNDATION PLANS
PLOTTED: 4/16/2026 9:07:44 AM
USER: DO

DEVELOPMENT LENGTH (L_{dh}) FOR UNCOATED HOOKED DEFORMED BARS IN TENSION (in)

BAR SIZE	GRADE 60 ksi f'c (psi)			
	4000	5000	6000	8000
#3	7	7	7	6
#4	11	11	10	9
#5	15	15	14	13
#6	20	19	19	16
#7	25	24	24	20
#8	30	29	29	25
#9	36	35	34	30
#10	43	42	41	35
#11	51	49	48	41
#14	66	64	63	54
#18	102	98	96	83

NOTES:

1. REINFORCING SPACING IS AT LEAST 3 BAR DIAMETERS AND LESS THAN 6 BAR DIAMETERS ON CENTER FOR DEVELOPMENT LENGTHS SHOWN. IF REINFORCING SPACING IS GREATER THAN 6 BAR DIAMETERS, DECREASE DEVELOPMENT LENGTH BY A FACTOR OF 0.625 ROUNDED TO THE NEAREST INCH. DO NOT USE HOOK REINFORCING WHERE SPACING IS LESS THAN 3 BAR DIAMETERS ON CENTER.

C1 TYPICAL DEVELOPMENT (EMBEDMENT) LENGTH FOR STANDARD END HOOKS

SCALE NTS

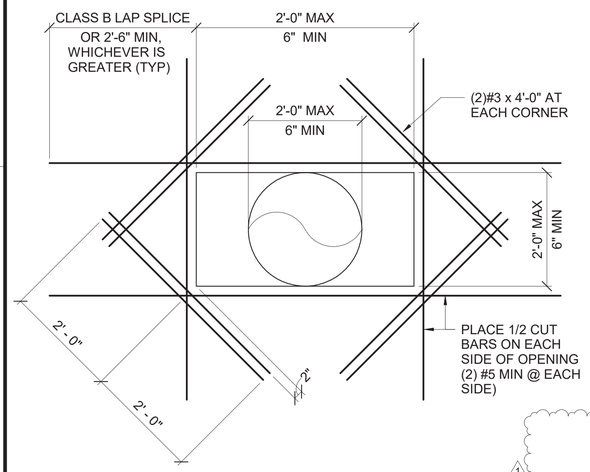

B1 TYPICAL PENETRATIONS IN SLAB-ON-GRADE OR WALL

SCALE NTS

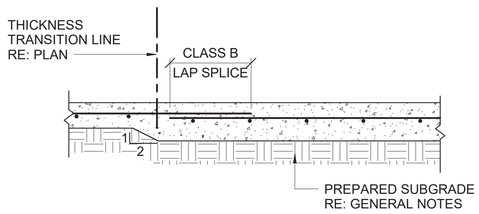

A1 TYPICAL SLAB ON GRADE THICKNESS TRANSITION

SCALE NTS

LAP SPLICE LENGTH (Lst) - REINFORCING STEEL STRENGTH, Fy) - = 60ksi (1,2,4,5,6,7)

BAR SIZE	C-C (8) SPACING (in)	f'c= 5000 psi COVER (in)				
		0.75	1.5	2	2.5	3
#3	2≤s<4	13	13	13	13	13
	4≤s<6	13	13	13	13	13
	6≤s	13	13	13	13	13
#4	2≤s<4	22	22	22	22	22
	4≤s<6	22	18	18	18	18
	6≤s	22	18	18	18	18
#5	2≤s<4	34	34	34	34	34
	4≤s<6	32	22	22	22	22
	6≤s	32	22	22	22	22
#6	2≤s<4	49	49	49	49	49
	4≤s<6	44	26	26	26	26
	6≤s	44	26	26	26	26
#7	2≤s<4	83	83	83	83	83
	4≤s<6	70	43	42	42	42
	6≤s	70	43	38	38	38
#8	2≤s<4	108	108	108	108	108
	4≤s<6	87	54	54	54	54
	6≤s	87	54	44	44	44
#9	2≤s<4	137	137	137	137	137
	4≤s<6	105	69	69	69	69
	6≤s	105	67	54	49	49
#10	2≤s<4	174	174	174	174	174
	4≤s<6	126	87	87	87	87
	6≤s	126	82	66	58	58
#11	2≤s<4	214	214	214	214	214
	4≤s<6	147	107	107	107	107
	6≤s	147	97	80	72	72

NOTES:

1. LAP SPLICE AND DEVELOPMENT LENGTHS SHOWN IN SCHEDULES ARE IN INCHES.
2. REINFORCING BARS ARE VERTICAL REINFORCING, HORIZONTAL REINFORCING, OR DIAGONAL REINFORCING WITH ANGLE GREATER THAN 45 DEGREES TO HORIZONTAL WITH MORE 12 INCHES OF CONCRETE CAST BELOW THE BARS. STANDARD HOOKS WITH SIDE COVER (NORMAL TO PLANE OF HOOK) ≥ 2.5" AND COVER ON BAR EXTENSION BEYOND HOOK ≥ 2".
3. DEVELOPMENT LENGTH SHOWN IS BASED ON 2" CONCRETE COVER. FOR REINFORCING WITH A DIFFERENT CONCRETE COVER, DETERMINE SPLICE LENGTH BY DECREASING LAP SPLICE LENGTH BY A FACTOR OF 0.77 ROUNDED UP TO THE NEAREST INCH. MINIMUM LAP SPLICE LENGTH = 12".
4. WHERE LESS THAN 12" OF FRESH CONCRETE IS PLACED BELOW HORIZONTAL REINFORCEMENT, DECREASE LAP SPLICE LENGTHS IN TABLE BY A FACTOR OF 0.77 ROUNDED UP TO THE NEAREST INCH. MINIMUM LAP SPLICE LENGTH = 12".
5. UNLESS NOTED OTHERWISE, LAP SPLICES IN CONCRETE BEAMS, SLABS, AND WALLS MUST BE TENSION LAP SPLICES. LAP SPLICES IN COLUMNS MUST BE TENSION LAP SPLICES. UNLESS NOTED OTHERWISE, TENSION LAP SPLICES MUST BE CLASS-B.
6. LAP SPLICES FOR BARS LARGER THAN No. 11 ARE NOT PERMITTED. PROVIDE MECHANICAL COUPLER IN ACCORDANCE WITH SPECIFICATION SECTION 03 30 00 CAST-IN-PLACE CONCRETE FOR #14 AND #18 REINFORCING BARS.
7. IF BARS OF DIFFERENT SIZES ARE LAP SPLICED, SPLICE LENGTH MUST BE THE LARGER L_d OF THE LARGER BAR OR L_{st} OF THE SMALLER BAR.
8. C-C INDICATES CENTER-TO-CENTER.

C3 TENSION DEVELOPMENT LENGTH

SCALE NTS

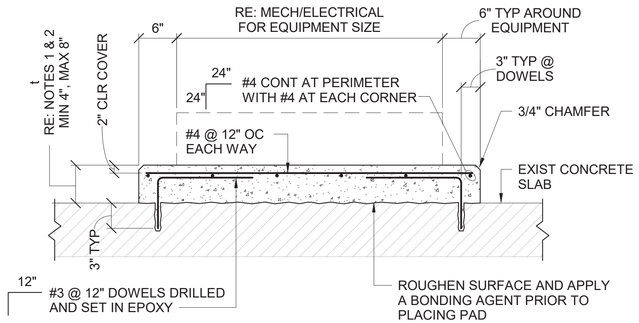

NOTES:

1. CONFIRM REQUIRED SIZE AND LOCATION OF HOUSEKEEPING PADS WITH EQUIPMENT MANUFACTURER'S PRIOR TO PLACEMENT OF CONCRETE. PROVIDE PADS, WHETHER SHOWN ON STRUCTURAL DRAWINGS OR NOT.
2. WHERE REQUIRED, COORDINATE HOUSEKEEPING PAD WITH ARCHITECTURAL, MECHANICAL, PLUMBING AND FIRE PROTECTION SO PENETRATIONS ARE PLACED BEFORE CONCRETE IS POURED.

A3 SECTION AT HOUSEKEEPING PAD

SCALE NTS

TENSION BAR DEVELOPMENT LENGTH (Ld) - REINFORCING STEEL STRENGTH, Fy = 60 ksi (1,2,3)

BAR SIZE	C-C (8) SPACING (in)	f'c (psi) 5000
#3	2≤s<4	12
	4≤s<6	12
	6≤s	12
#4	2≤s<4	17
	4≤s<6	14
	6≤s	14
#5	2≤s<4	26
	4≤s<6	17
	6≤s	17
#6	2≤s<4	38
	4≤s<6	20
	6≤s	20
#7	2≤s<4	64
	4≤s<6	32
	6≤s	29
#8	2≤s<4	83
	4≤s<6	42
	6≤s	34
#9	2≤s<4	106
	4≤s<6	53
	6≤s	42
#10	2≤s<4	134
	4≤s<6	67
	6≤s	51
#11	2≤s<4	165
	4≤s<6	83
	6≤s	61
#14	2≤s<4	238
	4≤s<6	119
	6≤s	84
#18	2≤s<4	422
	4≤s<6	211
	6≤s	141

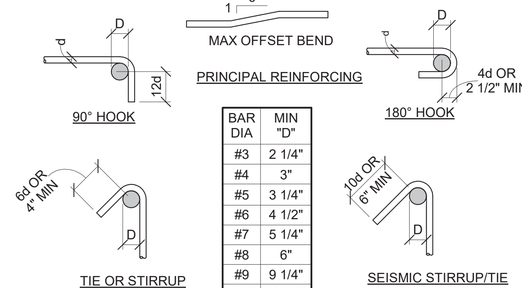

BAR DIA	MIN "D"
#3	2 1/4"
#4	3"
#5	3 1/4"
#6	4 1/2"
#7	5 1/4"
#8	6"
#9	9 1/4"
#10	10 1/4"
#11	11 1/2"

DETAIL NOTES:

1. MALE BENDS COLD.
2. BEND-TEST AND APPROVE #14 AND #18 BARS PRIOR TO BENDING.
3. FOR "D" ETC SEE CRSI HANDBOOK GOVERNING EDITION.

A4 BAR BENDS

SCALE NTS

SYM	DESCRIPTION	DATE
1	AMEND.0003 - REMOVE BOLLARDS	17-APRIL-26

NAVFAC

STATE OF TEXAS
ALEX BANNEROT
91686
LICENSED PROFESSIONAL ENGINEER
16 APR 2026
TEXAS REGISTERED ENGINEERING FIRM F-2966 SEAL

Jacobs / BURNS MCDONNELL
JACOBS/B&M, A JOINT VENTURE
1100 NORTH GLEBE ROAD
SUITE 500
ARLINGTON, VA 22201
A/E Contract No. N6743-20-D-0002
A/E Task Order No. N6743219F0315
JEG NO. D3430603
A/E INFO

APPROVED
FOR COMMANDER NAVFAC DATE 4/29/2026

ACTIVITY
SATISFACTORY TO DATE 31 DEC 2025

DES:	AB	DRW:	DO	REV:	AS
PM/DM					KKK
BRANCH MANAGER					SMK
CHIEF ENG/ARCH					SMK
FIRE PROTECTION					RO

DEPARTMENT OF THE NAVY
NAVFAC PACIFIC
NAVAL FACILITIES ENGINEERING SYSTEMS COMMAND
NAVAL FACILITIES ENGINEERING SYSTEMS COMMAND ~ PACIFIC
JOINT REGION MARIANAS (JRM)
ANDERSEN AIR FORCE BASE
GUAM

FY24 MCAF P-012/ AUY183012
NORTH AIRCRAFT PARKING RAMP

TYPICAL CONCRETE DETAILS

SCALE: AS SHOWN
EPROJECTS NO.: 1665555
CONSTR CONTROL NO.
NAVFAC DRAWING NO. 17361880
SHEET 257 OF 377

S-501

REDESIGN FINAL SUBMITTAL

IF SHEET IS LESS THAN 22" X 34" REDUCED PRINT. USE GRAPHIC SCALES

FILE NAME: U:\BLDG\NAVFAC Pacific\D3430603 – P-012 North Aircraft Parking Ramp\700 Working Documents\730 Models R_20\730.03 Structural\Base\P012-1665555-S-3D.rvt
LAYOUT NAME: TYPICAL CONCRETE DETAILS
PLOTTED: 4/16/2026 9:07:44 AM
USER: DO

MATCHLINE, SEE ES101

(TYP) 006

HML1

A4
ES504

HIGH MAST LIGHT (TYP)

HML2

005

A1
ES201

HML3

RACK-MOUNTED PANEL
RL-1 WITHIN TYPHOON
ENCLOSURE

003 TX-N-APRON

004

MH-94-24-2

T-NB44-6

25KVA

SW-94-11-1

MH-16-13

MH-16-12

SW-16-11A

SW-16-11

MH-16-11

001 002

MH-16-9

MH-16-9A

T-Fire
75KVA

MATCHLINE, SEE ES104

A1 ELECTRICAL SITE PLAN 3

SCALE 1" = 80'

AREA KEY MAP

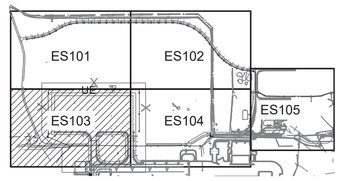

GENERAL NOTES - SITE PLANS

A. SEE SHEETS E-001 & E-002 FOR ABBREVIATIONS, LEGENDS AND GENERAL NOTES.

B. NOT ALL UTILITIES ARE SHOWN. LOCATE UTILITIES PRIOR TO START OF WORK.

C. SPARE CONDUITS MUST BE PROVIDED WITH A PULL ROPE.

KEYED NOTES

001. PROVIDE 1-6" CONDUIT WITH 3-500 KCMIL, CU, 15 KV CABLE FROM EXISTING SWITCH ST16-5 TO EXISTING SWITCH SW-16-11, 1-6" SPARE CONDUIT, 1-#4/0 COUNTERPOISE GROUND FOR FEEDER P-90.

002. PROVIDE 1-6" CONDUIT WITH 3-500 KCMIL, CU, 15 KV CABLE FROM EXISTING SWITCH ST16-6 TO EXISTING SWITCH SW-16-11; 1-6" SPARE CONDUIT, 1-#4/0 COUNTERPOISE GROUND FOR FEEDER P-94.

003. PROVIDE 75KVA 13.8KV-480/277V PADMOUNT TRANSFORMER, LOCATED WITHIN TYPHOON ENCLOSURE. REFER TO ARCHITECTURAL PLANS FOR ENLARGED PLANS. KTR MUST COORDINATE WITH TRANSFORMER PROCURED TO ENSURE HOOK STICK CLEARANCE IS PROVIDED IN FRONT OF THE TRANSFORMER. UTILITY TO PROVIDE KILOWATT METER WITHIN ENCLOSURE.

004. PROVIDE 1-5" CONDUIT WITH 3-#4/0 AWG CU, 15KV CABLE AND 1-#4/0 GROUND FROM EXISTING SWITCH TO 75KV TRANSFORMER. 1-5" SPARE CONDUIT.

005. PROVIDE 1-2" CONDUIT WITH 2-#8AWG AND 1-#10GND FOR HIGH MAST LIGHTS.

006. HIGH MAST LIGHT POLE MUST HAVE A REMOTE DRIVER CABINET MOUNTED TO POLE. HEIGHT TO THE TOP OF THE CABINET MUST NOT EXCEED 6 FEET. CABINET MUST FACE TOWARD THE APRON (PLAN-EAST).

GRAPHIC SCALE

0 40' 80' 160'

SCALE: 1"=80'

NORTH ARROW

TRUE N

IF SHEET IS LESS THAN 22" X 34" REDUCED PRINT. USE GRAPHIC SCALES

1	AMENDMENT 003 - NOTE CHANGED	16-APR-2026

NAVFAC

STATE OF MISSOURI
STEVEN D STRATTON
NUMBER PE-2009024920
PROFESSIONAL ENGINEER
4/16/2026
SEAL

Jacobs / BURNS MCDONNELL
JACOBS/B&M, A JOINT VENTURE
1100 NORTH GLEBE ROAD
SUITE 500
ARLINGTON, VA 22201

A/E Contract No. N62742-20-D-0002
A/E Task Order No. N6274221F0315
JEG NO. 03430693
A/E INFO

APPROVED
FOR COMMANDER NAVFAC DATE
SIGNATURE

ACTIVITY
AFI/MSC APPROVAL PER NAVFAC SAT-TO CHECKLIST

SATISFACTORY TO DATE 31 DEC 2025

DES:	DSB	DRW:	BDP	REV:	SDS
PM/DM					KKK
BRANCH MANAGER					SMK
CHIEF ENG/ARCH					SMK
FIRE PROTECTION					RO

DEPARTMENT OF THE NAVY
NAVFAC PACIFIC
NAVAL FACILITIES ENGINEERING SYSTEMS COMMAND
NAVAL FACILITIES ENGINEERING SYSTEMS COMMAND ~ PACIFIC
JOINT REGION MARIANAS (JRM)
ANDERSEN AIR FORCE BASE
GUAM

FY24 AUY183012 (P-012),
PDI: NORTH AIRCRAFT PARKING RAMP

ELECTRICAL SITE PLAN 3

SCALE:	AS SHOWN
EPROJECTS NO.:	1665555
CONSTR CONTROL NO.	
NAVFAC DRAWING NO.	17361892
SHEET	269 OF 377

ES103

REDESIGN FINAL SUBMITTAL

AMENDMENT 002 - MH IDS CHANGED 10-MAR-2026
FILE NAME: \\bmcd.burnsmcd.com\dfs\Clients\ANF\USNavy\Pac\133097_GuamP012NAR\Design\Elec\Sheets\P012_1665555_ES101-ES104.dwg
LAYOUT NAME: ES103
PLOTTED: 04/15/2026 3:07pm
USER: bdpinkley

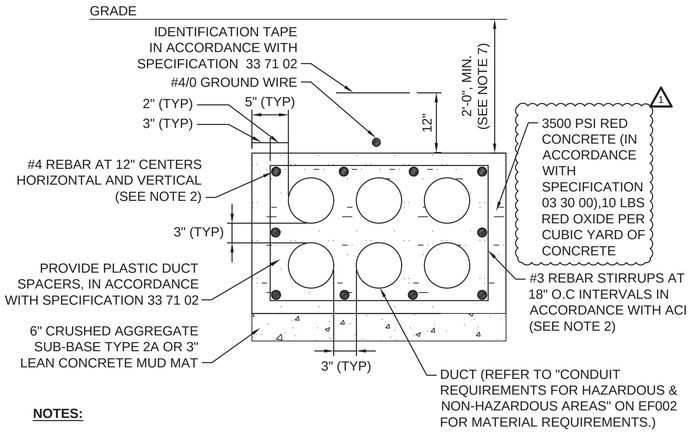

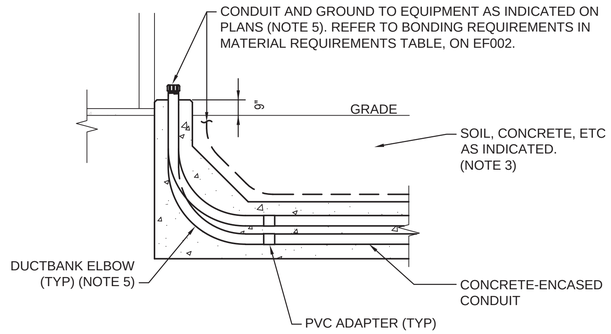

NOTES:

1. PROVIDE SIZE AND NUMBER OF CONDUITS AS INDICATED ON PLAN VIEWS OR ON THE DUCTBANK SECTIONS. MAINTAIN 5 INCHES OF CONCRETE AROUND THE OUTSIDE CONDUITS AND 3 INCHES BETWEEN CONDUITS.
2. REBAR AND TIE REINFORCEMENT REQUIRED UNDER ROADWAYS AND PAVED ROADS. EXTEND REINFORCEMENT 5' BEYOND THE EDGES OF ROADWAYS AND PAVED ROADS.
3. EXCAVATION, BACKFILL, AND COMPACTION IN ACCORDANCE WITH SPECIFICATION 33 71 02.
4. BOND THE DUCTBANK GROUND CABLE TO THE GROUND COUNTERPOISE.
5. REFER TO "CONDUIT REQUIREMENTS FOR HAZARDOUS & NON-HAZARDOUS AREAS" ON EF002 FOR MATERIAL AND INSTALLATION REQUIREMENTS WHEN STUBBING UP IN HAZARDOUS AND NON-HAZARDOUS AREAS. REFER TO SHEET EF002 FOR CONDUIT LABELING REQUIREMENTS. REFER TO SPEC 33 71 02 FOR BENDING RADIUS REQUIREMENTS.
6. PROVIDE FOUR FABRIC INNERDUCTS FOR 4-INCH COMMUNICATION CONDUITS.
7. OTHER BURIAL & SEPARATION REQUIREMENTS:
   - 36" BURIAL DEPTH FOR UTILITY PRIMARY CONDUITS
   - 12" MINIMUM VERTICAL SEPARATION WHEN UNDER PIPING OR OTHER UTILITIES.
   - 6" MINIMUM HORIZONTAL SEPARATION BETWEEN 'P', 'I/IS', 'C', AND 'T' DUCTBANKS.

C1 CONCRETE ENCASED DUCTBANK CONSTRUCTION - SECTION AND PROFILE

SCALE: NTS

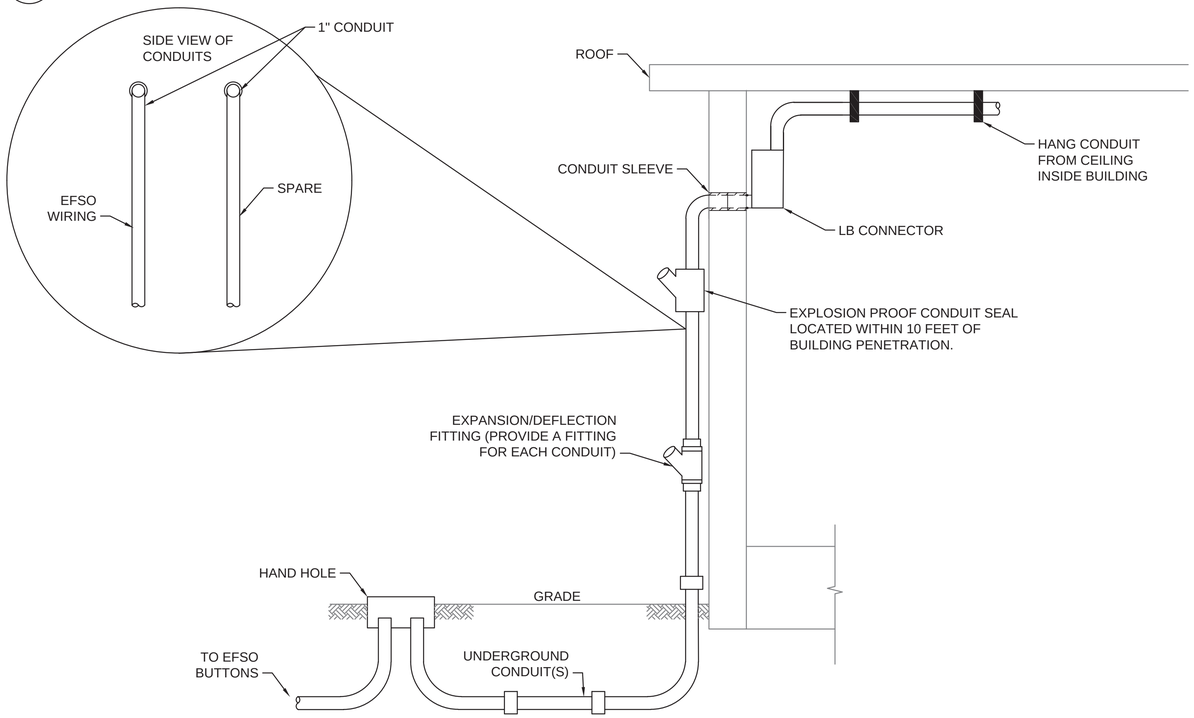

A1 UNDERGROUND CONDUIT BUILDING ENTRY DETAIL

SCALE: NTS

04/16/2026	
1	AMEND.0003

NAVFAC

TIM RENSHAW LICENSED 25719 KANSAS PROFESSIONAL ENGINEER

16 APRIL 2026

TEXAS REGISTERED ENGINEERING FIRM F-2966 SEAL

Jacobs / BURNS McDONNELL

JACOBS/B&M, A JOINT VENTURE
1100 NORTH GLEBE ROAD
SUITE 500
ARLINGTON, VA 22201

A/E Contract No. N62742-20-D-0002
A/E Task Order No. N6274221F0315
JEG NO. 024306003 A/E INFO

APPROVED

FOR COMMANDER NAVFAC DATE 4/29/2026

ACTIVITY
AFIMSC APPROVAL PER NAVFAC SAT-TO CHECKLIST

SATISFACTORY TO DATE 31 DEC 2025

DES: TSR	DRW: JTL	REV: DAB
PM/DM		KKK
BRANCH MANAGER		SMK
CHIEF ENG/ARCH		SMK
FIRE PROTECTION		RO

DEPARTMENT OF THE NAVY
NAVFAC PACIFIC
NAVAL FACILITIES ENGINEERING SYSTEMS COMMAND
NAVAL FACILITIES ENGINEERING SYSTEMS COMMAND – PACIFIC
JOINT REGION MARIANAS (JRM)
ANDERSEN AIR FORCE BASE
GUAM

FY24 AJY183012 (P-012),
PDI: NORTH AIRCRAFT PARKING RAMP

ELECTRICAL SITE DETIALS - DUCT BANKS

SCALE:	AS SHOWN
EPROJECTS NO.:	1665555
CONSTR CONTROL NO.	
NAVFAC DRAWING NO.	17361994
SHEET	373 OF 377

EF504

REDESIGN FINAL SUBMITTAL

IF SHEET IS LESS THAN 22" X 34" REDUCED PRINT. USE GRAPHIC SCALES

FILE NAME: \\bmcd\dfs\Clients\ANF\USNavy\Pac\133097_GuamP012NAR\Design\Elec\Sheets\P012_1665555_EF504.dwg
LAYOUT NAME: Layout1
PLOTTED: 04/16/2026 12:39pm
USER: ltewis

GENERAL NOTES:

A.	PROVIDE #3 REBAR CAGE IN DUCTBANK WHERE THE DUCTBANK IS INSTATED UNDER ROADWAYS.

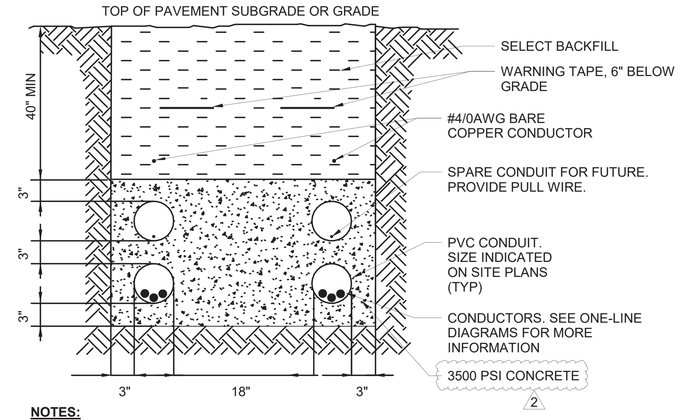

NOTES:

1. USE PLASTIC CONDUIT SPACERS AT 5'-0" OC.
2. THE #4/0 BARE COPPER CONDUCTOR SHOWN ABOVE THE CONCRETE ENCASED DUCTBANK IS IN ADDITION TO THE GROUND CONDUCTOR INDICATED ON THE ONE-LINE DIAGRAM SHOWN ON DRAWING EP601.

1

C4 2-WAY CONCRETE ENCASED DUCTBANK

SCALE:NTS

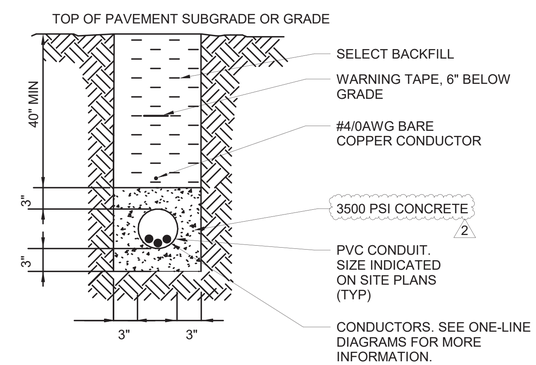

NOTES:

1. USE PLASTIC CONDUIT SPACERS AT 5'-0" OC.
2. THE #4/0 BARE COPPER CONDUCTOR SHOWN ABOVE THE CONCRETE ENCASED DUCTBANK IS IN ADDITION TO THE GROUND CONDUCTOR INDICATED ON THE ONE-LINE DIAGRAM SHOWN ON DRAWING EP601.

1

A4 1-WAY CONCRETE ENCASED DUCTBANK

SCALE:NTS

SYM	DESCRIPTION	DATE
2	AMEND.003 - CONC. PSI INCREASE	24-APR-26
1	UPDATE GROUND REQ.	10-MAR-26

NAVFAC

STATE OF MISSOURI
STEVEN D. STRATTON
NUMBER
PE-2006024920
PROFESSIONAL ENGINEER
04/24/2024
SEAL

Jacobs / BURNS McDONNELL

JACOBS/B&M, A JOINT VENTURE
1100 NORTH GLEBE ROAD
SUITE 500
ARLINGTON, VA 22201
A/E Contract No. N62742-20-D-0002
A/E Task Order No. N62742-21F5319
JEG NO. D3430603
A/E INFO

APPROVED
FOR COMMANDER NAVFAC DATE 4/29/2026

ACTIVITY
AFIMSC APPROVAL PER NAVFAC SAT-TO CHECKLIST

SATISFACTORY TO DATE 31 DEC 2025

DES: DSB	DRW: BDP	REV: SDS
PM/DM		KKK
BRANCH MANAGER		SMK
CHIEF ENG/ARCH		SMK
FIRE PROTECTION		RO

DEPARTMENT OF THE NAVY
NAVAL FACILITIES ENGINEERING SYSTEMS COMMAND
NAVAL FACILITIES ENGINEERING SYSTEMS COMMAND ~ PACIFIC
NAVFAC PACIFIC
JOINT REGION MARIANAS (JRM)
ANDERSEN AIR FORCE BASE
GUAM

FY24 AJJY183012 (P-012),
PDI: NORTH AIRCRAFT PARKING RAMP

ELECTRICAL SITE DETAILS

SCALE: AS SHOWN
EPROJECTS NO.: 1665555
CONSTR CONTROL NO.
NAVFAC DRAWING NO. 17361899
SHEET 276 OF 377

ES504

REDESIGN FINAL SUBMITTAL

IF SHEET IS LESS THAN 22" X 34" REDUCED PRINT. USE GRAPHIC SCALES

FILE NAME: C:\Revit_Projects\133097_E_Central_bdpinkley@burnsmcd.com.rvt
LAYOUT NAME: ELECTRICAL SITE DETAILS
PLOTTED: 4/23/2026 4:24:54 PM
USER: BDP