REQUEST FOR QUOTATION (THIS IS NOT AN ORDER)	THIS RFQ ☐ IS ☒ IS NOT A SMALL BUSINESS SET-ASIDE	Page 1

1. REQUEST NO.	2. DATE ISSUED	3. REQUISITION/PURCHASE REQUEST NO.	4. CERT. FOR NAT. DEF. UNDER BDSA REG. 2 AND/OR DMS REG.1 ☐	RATING
SPRTA1-26-Q-0364	**3 JUN 2026**	**FD20302601415**		**DO: A1**

5a. ISSUED BY	6. DELIVERY BY *(Date)*
CODE: **SPRTA1** **DLA WEAPONS SUPPORT AT OKLAHOMA CIT** **DLR PROCUREMENT OPERATIONS (AO)** **3001 STAFF DRIVE** **TINKER AFB OK 73145-3070** **BUYER:** James Maynard james.maynard.6@us.af.mil Phone: (730) 321- 2262 Fax: (000	**SEE SCHEDULE** **SCD:B**

5b. FOR INFORMATION CALL *(NO COLLECT CALLS)*			7. DELIVERY
NAME **James Maynard**	TELEPHONE NUMBER AREA CODE **(730)**	NUMBER **321 -2262**	☐ FOB DESTINATION ☒ OTHER *(See Schedule)*

8. TO			9. DESTINATION	
a. NAME	b. COMPANY		a. NAME OF CONSIGNEE	
c. STREET ADDRESS			b. STREET ADDRESS	
			c. CITY	
d. CITY	e. STATE	f. ZIP CODE	d. STATE	e. ZIP CODE

10. PLEASE FURNISH QUOTATIONS TO THE ISSUING OFFICE IN BLOCK 5A ON OR BEFORE CLOSE OF BUSINESS *(Date)*	IMPORTANT: This is a request for information, and quotations furnished are not offers. If you are unable to quote, please so indicate on this form and return it to the address in Block 5A. This request does not commit the Government to pay any costs incurred in the preparation of the submission of this quotation or to contract for supplies or services. Supplies are of domestic origin unless otherwise indicated by quoter. Any representations and/or certifications attached to this Request for Quotations must be completed by the quoter.
6 JUL 2026	

11. SCHEDULE *(Include applicable Federal, State and local taxes)*

ITEM NO. (a)	SUPPLIES/SERVICES (b)	QUANTITY (c)	UNIT (d)	UNIT PRICE (e)	AMOUNT (f)
	SEE SCHEDULE **FMS REQUIREMENT** **Subject to the terms and conditions stated herein, the Contractor agrees to hold its offered prices firm for 120 days.** NAICS CODE: **336413** SIZE STD: **1,250** Early or partial delivery is acceptable at no additional costs to the Government. COMPETITION EXPECTED.				

12. DISCOUNT FOR PROMPT PAYMENT ☐	a. 10 CALENDAR DAYS (%)	b. 20 CALENDAR DAYS (%)	c. 30 CALENDAR DAYS (%)	d. CALENDAR DAYS	
				NUMBER	PERCENTAGE

NOTE: Additional provisions and representations ☒ are ☐ are not attached.

13. NAME AND ADDRESS OF QUOTER			14. SIGNATURE OF PERSON AUTHORIZED TO SIGN QUOTATION	15. DATE OF QUOTATION
a. NAME OF QUOTER CAGE:				
b. STREET ADDRESS			16. SIGNER	
c. COUNTY			a. NAME *(Type or print)*	b. TELEPHONE AREA CODE
d. CITY	e. STATE		c. TITLE *(Type or print)*	NUMBER

FOLD FOLD

SOLICITATION NO. SPRTA126Q0364
DUE: 6 -JUL -2026

FROM:

AFFIX STAMP HERE

TO:

ATTN: James Maynard
DLA WEAPONS SUPPORT AT OKLAHOMA CIT
DLR PROCUREMENT OPERATIONS (AO)
3001 STAFF DRIVE
TINKER AFB OK 73145-3070

PART I - THE SCHEDULE
SECTION B
SUPPLIES OR SERVICES AND PRICES/COSTS

New Manufactured Materiel

Item No.
0001

Firm Fixed Price

Quantity	U/I	Unit Price	Amount
1	EA		

CLIN	ACRN	ACRN Total
0001	AA	

GROUP		STOCK NO	P/N	CAGE
Group 001	Alternate	1650-00-784-9692	374455-3	98897

NSN: 1650-01-134-4415
SERVOMECHANISM, HYDR
It applies hydraulic power to actuate ailerons that provide lateral control of the aitcraft.
steel, aluminum, rubber

Manufacturer	Part Number
70236	374455-7
98897	374455-7

Associated Document(s)	Line Item(s)
FD20302601415	0001

Priority: E

Limitations of Liability: Other Than High Value Item

Inspection: Origin
Acceptance: Origin
Inspection/Acceptance Report: Receiving Report Required
Quality Assurance: Higher Level Contract Quality Requirements
The Contractor shall comply with the standard(s) listed below. (if more than one, check the appropriate standard.)

Title	Number	Date	Tailoring
ISO	9001-2015	2008	Equivalent or Newer

Applicability: None ;

Foreign Military Sales :FMS Case:EC-D-SAA
Buy American Act/Balance of Payments Program
IUID Required: Yes

☐ **Transportation From Continental United States CONUS (CONUS) Sources**

TYPE / SHIP TO CODE	F.O.B.
* DEC005	ORIGIN

Class I ODS Substance	Application/Use	Quantity
None	None	None

Type / Ship To	PACRN	Mark For

New Manufactured Materiel

	* DEC005		PAA	DECP00	
	Type / Ship To	**Quantity (U/I)**	**On or Before**	**Req No / Pri**	
Required Delivery					
	* DEC005	1 EA	23 FEB 2028	DECP5460420040	/ PRI: 3
Proposed Delivery					
	* DEC005	1 EA			

TAC:DFMS

SHIP TO (FOREIGN MILITARY SALES)

TYPE/CODE: * DEC005
SUPPLEMENTAL ADDRESS CODE: DA5SAA
FMS CASE CODE/LOA: EC-D-SAA/002
MAPAC SHIP TO CODE: DEC005
MAPAC MARK FOR: DECP00
REQUISITION NUMBER: (See Individual Line Item)
REQUISITION PRIORITY: (See Individual Line Item)
AWARD NUMBER:

PART I - THE SCHEDULE
SECTION E
INSPECTION AND ACCEPTANCE

52.246-2 **INSPECTION OF SUPPLIES--FIXED-PRICE** (AUG 1996)
(IAW FAR 46.302)

52.246-11 **HIGHER-LEVEL CONTRACT QUALITY REQUIREMENT** (DEC 2014)
(IAW FAR 46.311, DFARS 246.202-4(1))
(a) The Contractor shall comply with the higher-level quality standard(s) listed below. [*If more than one standard is listed, the offeror shall indicate its selection by checking the appropriate block.*]*

	Title	Number	Date	Tailoring
***See Individual Line Item Schedule**				

52.246-16 **RESPONSIBILITY FOR SUPPLIES** (APR 1984)
(IAW FAR 46.316)

INSPECTION AND ACCEPTANCE (SEP 1999)
(IAW FAR 46.401(b), FAR 46.503)

Government Contract Quality Assurance Inspection and Acceptance will be at (Final): **[CONTRACTOR FILL-IN]**
Item No(s): **See schedule for items with the following code(s) listed below :**

Inspection Code and Address:

PART I - THE SCHEDULE
SECTION F
DELIVERIES OR PERFORMANCE

52.242-17 **GOVERNMENT DELAY OF WORK** (APR 1984)
(IAW FAR 42.1305(c))

52.247-30 **F.O.B. ORIGIN, CONTRACTOR'S FACILITY** (FEB 2006)
(IAW FAR 47.303-2(c))

52.247-65 **F.O.B. ORIGIN, PREPAID FREIGHT--SMALL PACKAGE SHIPMENTS** (JAN 1991)
(IAW FAR 47.303-17(f))

F.O.B. ORIGIN (OCT 1993)
(IAW FAR 47.305(b))

Any supply item applicable to this document shall be delivered F.O.B. at:

F.O.B. Address: **[CONTRACTOR FILL-IN]**

PART I - THE SCHEDULE
SECTION G
CONTRACT ADMINISTRATION DATA

252.232-7006 **WIDE AREA WORKFLOW PAYMENT INSTRUCTIONS** (JAN 2023)
(IAW DFARS 232.7004(b), PGI 232.7004(b)(1), DFARS 212.301(f)(liii))

(a) *Definitions.* As used in this clause—
"Department of Defense Activity Address Code (DoDAAC)" is a six position code that uniquely identifies a unit, activity, or organization.
"Document type" means the type of payment request or receiving report available for creation in Wide Area WorkFlow (WAWF).
"Local processing office (LPO)" is the office responsible for payment certification when payment certification is done external to the entitlement system.

(b) *Electronic invoicing*. The WAWF system is the method to electronically process vendor payment requests and receiving reports, as authorized by DFARS 252.232-7003, Electronic Submission of Payment Requests and Receiving Reports.

(c) *WAWF access*. To access WAWF, the Contractor shall—

(1) Have a designated electronic business point of contact in the Central Contractor Registration at https://www.acquisition.gov ; and

(2) Be registered to use WAWF at https://wawf.eb.mil/ following the step-by-step procedures for self-registration available at this web site.

(d) *WAWF training*. The Contractor should follow the training instructions of the WAWF Web-Based Training Course and use the Practice Training Site before submitting payment requests through WAWF. Both can be accessed by selecting the "Web Based Training" link on the WAWF home page at https://wawf.eb.mil/ .

(e) *WAWF methods of document submission*. Document submissions may be via web entry, Electronic Data Interchange, or File Transfer Protocol.

(f) *WAWF payment instructions*. The Contractor must use the following information when submitting payment requests and receiving reports in WAWF for this contract/order:

(1) *Document type*. The Contractor shall use the following document type(s).

SEE DFARS CLAUSE 252.232-7003 (b)

(2) *Inspection/acceptance location*. The Contractor shall select the following inspection/acceptance location(s) in WAWF, as specified by the contracting officer.

SEE SCHEDULE, SECTION B

(3) *Document routing*. The Contractor shall use the information in the Routing Data Table below only to fill in applicable fields in WAWF when creating payment requests and receiving reports in the system.

Routing Data Table*

Field Name in WAWF	*Data to be entered in WAWF*
Pay Official DoDAAC	*SEE FRONT PAGE OF SOLICITATION*
Issue By DoDAAC	*SEE FRONT PAGE OF SOLICITATION*
Admin DoDAAC	*SEE FRONT PAGE OF SOLICITATION*
Inspect By DoDAAC	*SEE SCHEDULE SECTION B*
Ship To Code	*SEE SCHEDULE SECTION B*
Ship From Code	*SEE SCHEDULE SECTION B*
Mark For Code	*SEE SCHEDULE SECTION B*
Service Approver (DoDAAC)	*N/A*
Service Acceptor (DoDAAC)	*N/A*
Accept at Other DoDAAC	*SEE SCHEDULE SECTION E*
LPO DoDAAC	*N/A*
DCAA Auditor DoDAAC	*CONTACT LOCAL DCMA OFFICE*
Other DoDAAC(s)	*N/A*

(4) *Payment request and supporting documentation.* The Contractor shall ensure a payment request includes appropriate contract line item and subline item descriptions of the work performed or supplies delivered, unit price/cost per unit, fee (if applicable), and all relevant back-up documentation, as defined in DFARS Appendix F, (*e.g*. timesheets) in support of each payment request.

(5) *WAWF email notifications*. The Contractor shall enter the e-mail address identified below in the "Send Additional Email Notifications" field of WAWF once a document is submitted in the system.

SEE FRONT PAGE OF SOLICITATION

(g) *WAWF point of contact.*

(1) The Contractor may obtain clarification regarding invoicing in WAWF from the following contracting activity's WAWF point of contact.

CONTACT LOCAL DCMA OFFICE

(2) For technical WAWF help, contact the WAWF helpdesk at 866-618-5988.

(The above Clause/Provision has been modified.)

ACCOUNTING AND APPROPRIATION DATA (AUG 1998)

ACRN	Accounting and Appropriation Chargeable Funds Citation	Amount Chargeable
AA	9711X8242 0002 4F X LC 5W CSAAEC 000000 00000 002000 503000 F03000	$0.00
PSR: 844136 FSR: 110300 DSR: 071828 CIN: F3YTBK6069A0010000AA		
	ACRN TOTAL	**$ 0.00**

PART II - CONTRACT CLAUSES
SECTION I
CONTRACT CLAUSES

5352.201-9101 **OMBUDSMAN** (JUN 2023)
(IAW DAFFARS 5301.9103)

(a) An ombudsman has been appointed to hear and facilitate the resolution of concerns from offerors, potential offerors, and others for this acquisition. When requested, the ombudsman will maintain strict confidentiality as to the source of the concern. The existence of the ombudsman does not affect the authority of the program manager, contracting officer, or source selection official. Further, the ombudsman does not participate in the evaluation of proposals, the source selection process, or the adjudication of protests or formal contract disputes. The ombudsman may refer the interested party to another official who can resolve the concern.

(b) Before consulting with an ombudsman, interested parties must first address their concerns, issues, disagreements, and/or recommendations to the contracting officer for resolution. Consulting an ombudsman does not alter or postpone the timelines for any other processes (e.g., agency level bid protests, GAO bid protests, requests for debriefings, employee-employer actions, contests of OMB Circular A-76 competition performance decisions).

(c) The Competition Advocate (CA) at each contracting activity/office (as defined in DLAD 2.101) shall act as the ombudsman and attempt to resolve contractor complaints. DLA AVIATION – AOCA's CA/ombudsman can be reached at 385-591-1672, facsimile (405) 734-8129. Complaints which cannot be so resolved shall be forwarded to the HQ through J-72 for resolution by the DLA competition advocate. Each activity is responsible for developing procedures for executing the duties and responsibilities of its local ombudsman.

(d) The ombudsman has no authority to render a decision that binds the agency.

(e) Do not contact the ombudsman to request copies of the solicitation, verify offer due date, or clarify technical requirements. Such inquiries shall be directed to the contracting officer.
(The above Clause/Provision has been modified.)

52.203-19	**PROHIBITION ON REQUIRING CERTAIN INTERNAL CONFIDENTIALITY AGREEMENTS OR STATEMENTS** (JAN 2017) (IAW FAR 3.909-3 (b))
252.203-7000	**REQUIREMENTS RELATING TO COMPENSATION OF FORMER DOD OFFICIALS** (SEP 2011) (IAW DFARS 203.171-4(a), DFARS 212.301(f)(ii))
252.203-7002	**REQUIREMENT TO INFORM EMPLOYEES OF WHISTLEBLOWER RIGHTS** (DEC 2022) (IAW DFARS 203.970)
52.204-10	**REPORTING EXECUTIVE COMPENSATION AND FIRST-TIER SUBCONTRACT AWARDS** (JUN 2020) (IAW FAR 4.1403(a))
52.204-13	**SYSTEM FOR AWARD MANAGEMENT MAINTENANCE** (OCT 2018) (IAW FAR 4.1105(b))
52.204-18	**COMMERCIAL AND GOVERNMENT ENTITY CODE MAINTENANCE** (AUG 2020) (IAW FAR 4.1804(c), FAR 12.301(d))
52.204-19	**INCORPORATION BY REFERENCE OF REPRESENTATIONS AND CERTIFICATIONS** (DEC 2014) (IAW FAR 4.1202(b))
52.204-21	**BASIC SAFEGUARDING OF COVERED CONTRACTOR INFORMATION SYSTEMS** (NOV 2021) (IAW FAR 4.1903)
52.204-23	**PROHIBITION ON CONTRACTING FOR HARDWARE, SOFTWARE, AND SERVICES DEVELOPED OR PROVIDED BY KASPERSKY LAB COVERED ENTITIES** (DEC 2023) (IAW FAR 4.2004)
52.204-25	**PROHIBITION ON CONTRACTING FOR CERTAIN TELECOMMUNICATIONS AND VIDEO SURVEILLANCE SERVICES OR EQUIPMENT** (NOV 2021) (IAW 4.2105(b))
52.204-27	**PROHIBITION ON A BYTEDANCE COVERED APPLICATION** (JUN 2023) (IAW FAR 4.2203)
52.204-30	**FEDERAL ACQUISITION SUPPLY CHAIN SECURITY ACT ORDERS- PROHIBITION** (DEC 2023) (IAW FAR 4.2306(c))
252.204-7003	**CONTROL OF GOVERNMENT PERSONNEL WORK PRODUCT** (APR 1992) (IAW DFARS 204.404-70(b))
252.204-7012	**SAFEGUARDING COVERED DEFENSE INFORMATION AND CYBER INCIDENT REPORTING DEVIATION 2024-O0013, REVISION 1** (MAY 2024) (IAW Class Deviation 2024-O0013 Rev. 1)
252.204-7015	**NOTICE OF AUTHORIZED DISCLOSURE OF INFORMATION FOR LITIGATION SUPPORT** (JAN 2023) (IAW DFARS 204.7403(b), DFARS 212.301(f)(i)(F))
252.204-7018	**PROHIBITION ON THE ACQUISITION OF COVERED DEFENSE TELECOMMUNICATIONS EQUIPMENT OR SERVICES** (JAN 2023) (IAW DFARS 204.2105(c))
252.204-7020	**NIST SP 800-171 DOD ASSESSMENT REQUIREMENTS** (NOV 2023) (IAW DFARS 204.7304(e))

252.204-7021 CONTRACTOR COMPLIANCE WITH THE CYBERSECURITY MATURITY MODEL CERTIFICATION LEVEL REQUIREMENTS (NOV 2025)
(IAW DFARS 204.7504(a))

(a) *Definitions*. As used in this clause—

"Controlled unclassified information" means information the Government creates or possesses, or information an entity creates or possesses for or on behalf of the Government, that a law, regulation, or Governmentwide policy requires or permits an agency to handle using safeguarding or dissemination controls (32 CFR 2002.4(h)).
"Current" means—
(1) With regard to Conditional Cybersecurity Maturity Model Certification (CMMC) Status—
(i) Not older than 180 days for Conditional Level 2 (Self) assessments and Conditional Level 2 (certified third-party assessment organization (C3PAO)) assessments, with—
(A) No changes in compliance with the requirements at 32 CFR part 170 since the Conditional CMMC Status date (see 32 CFR 170.16 and 170.17); and
(B) A corresponding affirmation of continuous compliance by an affirming official (see 32 CFR 170.4); and
(ii) Not older than 180 days for Conditional Level 3 (Defense Industrial Base Cybersecurity Assessment Center (DIBCAC)) assessments, with—
(A) No changes in compliance with the requirements at 32 CFR part 170 since the Conditional CMMC Status date (see 32 CFR 170.18); and
(B) A corresponding affirmation of continuous compliance by an affirming official;
(2) With regard to Final CMMC Status—
(i) Not older than 1 year for Final Level 1 (Self), with—
(A) No changes in compliance with the requirements at 32 CFR part 170 since the Final CMMC Status date (see 32 CFR 170.15); and
(B) A corresponding affirmation of continuous compliance, not older than 1 year, by an affirming official;
(ii) Not older than 3 years for Final Level 2 (Self) assessments and Final Level 2 (C3PAO) assessments, with—
(A) No changes in compliance with the requirements at 32 CFR part 170 since the Final CMMC Status date (see 32 CFR 170.16 and 170.17); and
(B) A corresponding affirmation of continuous compliance, not older than 1 year, by an affirming official; and
(iii) Not older than 3 years for Final Level 3 (DIBCAC) assessments, with—
(A) No changes in compliance with the requirements at 32 CFR part 170 since the Final CMMC Status date (see 32 CFR 170.18); and
(B) A corresponding affirmation of continuous compliance, not older than 1 year, by an affirming official; and
(3) With regard to affirmation of continuous compliance (32 CFR 170.22), not older than 1 year with no changes in compliance with the requirements at 32 CFR part 170.
"Cybersecurity Maturity Model Certification (CMMC) status" means the result of meeting or exceeding the minimum required score for the corresponding assessment. The potential statuses are as follows:
(1) Final Level 1 (Self).
(2) Conditional Level 2 (Self).
(3) Final Level 2 (Self).
(4) Conditional Level 2 (C3PAO).
(5) Final Level 2 (C3PAO).
(6) Conditional Level 3 (DIBCAC).
(7) Final Level 3 (DIBCAC).
"Cybersecurity Maturity Model Certification unique identifier (CMMC UID)" means 10 alpha-numeric characters assigned to each CMMC assessment and reflected in the Supplier Performance Risk System (SPRS) for each contractor information system.
"Federal contract information (FCI)" means information, not intended for public release, that is provided by or generated for the Government under a contract to develop or deliver a product or service to the Government. It does not include information provided by the Government to the public, such as on public websites, or simple transactional information, such as information necessary to process payments.
"Plan of action and milestones" means a document that identifies tasks to be accomplished. It details resources required to accomplish the elements of the plan, any milestones in meeting the tasks, and scheduled completion dates for the milestones, as defined in National Institute of Standards and Technology Special Publication 800-115 (32 CFR 170.21).

(b) *Framework*. The Cybersecurity Maturity Model Certification (CMMC) is a framework for assessing a contractor's compliance with applicable information security protections (see 32 CFR part 170).

(c) *Duplication*. The CMMC assessments will not duplicate efforts from any other comparable DoD assessment, except for rare circumstances when a reassessment may be necessary, for example, when there are indications of issues with cybersecurity and/or compliance with CMMC requirements.

(d) *Requirements*. The Contractor shall—

(1)(i) Have and maintain for the duration of the contract a current CMMC status at the following CMMC level, or higher: _____ *Contracting Officer insert: CMMC Level 1 (Self); CMMC Level 2 (Self); CMMC Level 2 (C3PAO); or CMMC Level 3 (DIBCAC)* for all information systems used in performance of the contract, task order, or delivery order that process, store, or transmit FCI or CUI; and

(ii) Consult 32 CFR 170.23 related to the flowdown of the CMMC requirements, and flow down the correct CMMC level to subcontracts and other contractual instruments;

(2) Only process, store, or transmit FCI or CUI on contractor information systems that have a CMMC status at the CMMC level required in paragraph (d)(1) of this clause, or higher;

(3) Complete on an annual basis, and maintain as current, an affirmation, by the affirming official (see 32 CFR 170.4), of continuous compliance with the requirements associated with the CMMC level required in paragraph (d)(1) of this clause in the Supplier Performance Risk System (SPRS) (*https://piee.eb.mil*) for each CMMC UID applicable to each of the contractor information systems that process, store, or transmit FCI or CUI and that are used in performance of the contract;

(4) Ensure all subcontractors and suppliers complete prior to subcontract award, and maintain on an annual basis, an affirmation, by the affirming official (see 32 CFR 170.4), of continuous compliance with the requirements associated with the CMMC level required for the subcontract or other contractual instrument for each of the subcontractor information systems that process, store, or transmit FCI or CUI and that are used in performance of the subcontract; and

(5) If the Contractor has a CMMC Status of Conditional, successfully close out a valid plan of action and milestones (32 CFR 170.21) to achieve a CMMC Status of Final.

(e) *Reporting*. The Contractor shall—

(1) Submit to the Contracting Officer—

(i) The CMMC UID(s) issued by SPRS for contractor information systems that will process, store, or transmit FCI or CUI during performance of the contract; and

(ii) Any changes in the CMMC UIDs generated in SPRS throughout the life of the contract, task order, or delivery order, if applicable;

(2) Enter into SPRS the results of a current self-assessment for each CMMC UID, not covered by a C3PAO assessment or DIBCAC assessment, applicable to each of the contractor information systems that process, store, or transmit FCI or CUI and that are used in performance of the contract; and

(3) Complete in SPRS on an annual basis and maintain as current an affirmation of continuous compliance by the affirming official (see 32 CFR 170.4) for each self-assessment, C3PAO assessment, or DIBCAC assessment required under the contract in SPRS.

(f) *Subcontracts*. The Contractor shall—

(1) Insert the substance of this clause, including this paragraph (f) and excluding paragraph (e)(1), in subcontracts and other contractual instruments, including those for the acquisition of commercial products or commercial services, excluding commercially available off-the-shelf items, if the subcontract or other contractual instrument will contain a requirement to process, store, or transmit FCI or CUI; and

(2) Prior to awarding a subcontract or other contractual instrument, ensure that the subcontractor has a current CMMC certificate or current CMMC status at the CMMC level that is appropriate for the information that is being flowed down to the subcontractor based on the requirements at 32 CFR 170.23.

252.204-7022 EXPEDITING CONTRACT CLOSEOUT (MAY 2021)
(IAW DFARS 204.804-70)

(a) At the conclusion of all applicable closeout requirements of Federal Acquisition Regulation 4.804, the Government and Contractor shall mutually agree on the residual dollar amount remaining on the contract. Both the Government and Contractor agree to waive payment of any residual dollar amount of $1,000 or less to which either party may be entitled at the time of contract closeout.

(b) A residual dollar amount includes all money owed to either party at the end of the contract and as a result of the contract, excluding amounts connected in any way with taxation or a violation of law or regulation.

(c) For purposes of determining residual dollar amounts, offsets (e.g., across multiple contracts or orders) may be considered only to the extent permitted by law.

52.209-10 **PROHIBITION ON CONTRACTING WITH INVERTED DOMESTIC CORPORATIONS** (NOV 2015)
(IAW FAR 9.108-5(b))

52.211-5 **MATERIAL REQUIREMENTS** (AUG 2000)
(IAW FAR 11.302)

52.211-15 **DEFENSE PRIORITY AND ALLOCATION REQUIREMENTS** (APR 2008)
(IAW FAR 11.604(b))
This is a rated order certified for national defense, emergency preparedness, and energy program use, and the Contractor shall follow all the requirements of the Defense Priorities and Allocations System regulation (15 CFR 700).

252.211-7003 **ITEM UNIQUE IDENTIFICATION AND VALUATION** (JAN 2023)
(IAW DFARS 211.274-5(a), DFARS 212.301(f)(xii))
(a) *Definitions*. As used in this clause—

"DoD recognized unique identification equivalent" means a unique identification method that is in commercial use and has been recognized by DoD. All DoD recognized unique identification equivalents are listed at https://www.acq.osd.mil/asda/dpc/ce/ds/unique-id.html.
"Unique item identifier type" means a designator to indicate which method of uniquely identifying a part has been used. The current list of accepted unique item identifier types is maintained at https://www.acq.osd.mil/asda/dpc/ce/ds/unique-id.html.

(c) *Unique item identifier.*
(1) The Contractor shall provide a unique item identifier for the following:
(i) Delivered items for which the Government's unit acquisition cost is $5,000 or more, except for the following line items:

Contract Line, Subline, or Exhibit Line Item Number	Item Description
	See Schedule as Applicable

(ii) Items for which the Government's unit acquisition cost is less than $5,000 that are identified in the Schedule or the following table:

Contract Line, Subline, or Exhibit Line Item Number	Item Description
*Items less than $5000, which require UID, will be specifically identified in the schedule.	See Schedule as Applicable

(iii) Subassemblies, components, and parts embedded within delivered items, items with warranty requirements, DoD serially managed reparables and DoD serially managed nonreparables as specified in Attachment Number _____(or See Schedule as Applicable).
(iv) Any item of special tooling or special test equipment as defined in FAR 2.101 that have been designated for preservation and storage for a Major Defense Acquisition Program as specified in Attachment Number _____(or See Schedule as Applicable).
(v) Any item not included in paragraphs (c)(1)(i), (ii), (iii), or (iv) of this clause for which the contractor creates and marks a unique item identifier for traceability.

(f) The Contractor shall submit the information required by paragraphs (d) and (e) of this clause as follows:

(1) End items shall be reported using the receiving report capability in Wide Area WorkFlow (WAWF) in accordance with the clause at 252.232-7003. If WAWF is not required by this contract, and the contractor is not using WAWF, follow the procedures at http://dodprocurementtoolbox.com/site/uidregistry/ .

(2) Embedded items shall be reported by one of the following methods—

(i) Use of the embedded items capability in WAWF;

(ii) Direct data submission to the IUID Registry following the procedures and formats at http://dodprocurementtoolbox.com/site/uidregistry/; or

(iii) Via WAWF as a deliverable attachment for exhibit line item number _____, Unique Item Identifier Report for Embedded Items, Contract Data Requirements List, DD Form 1423.

52.213-4 **TERMS AND CONDITIONS--SIMPLIFIED ACQUISITIONS (OTHER THAN COMMERCIAL PRODUCTS AND COMMERCIAL SERVICES) (DEVIATION 2025-O0003 and 2025-O0004)** (MAR 2025)
(IAW FAR 13.302-5(d))

52.215-8 **ORDER OF PRECEDENCE--UNIFORM CONTRACT FORMAT** (OCT 1997)
(IAW FAR 15.209(h))

52.219-28 **POSTAWARD SMALL BUSINESS PROGRAM REREPRESENTATION** (JAN 2025)
(IAW FAR 19.309(c)(1))

(h) If the Contractor does not have representations and certifications in SAM, or does not have a representation in SAM for the NAICS code applicable to this contract, the Contractor is required to complete the following rerepresentation and submit it to the contracting office, along with the contract number and the date on which the rerepresentation was completed:

(1) The Contractor represents that it **[ ]** is, **[ ]** is not a small business concern under NAICS Code _____ assigned to contract number _____.

(2) *[Complete only if the Contractor represented itself as a small business concern in paragraph (h)(1) of this clause.]*
The Contractor represents that it **[ ]** is, **[ ]** is not, a small disadvantaged business concern as defined in 13 CFR 124.1002.

(3) *[Complete only if the Contractor represented itself as a small business concern in paragraph (h)(1) of this clause.]*
The Contractor represents that it **[ ]** is, **[ ]** is not a women-owned small business concern.

(4) Women-owned small business (WOSB) joint venture eligible under the WOSB Program. The Contractor represents that it **[ ]** is, **[ ]** is not a joint venture that complies with the requirements of 13 CFR 127.506(a) through (c). [The Contractor shall enter the name and unique entity identifier of each party to the joint venture: _____.]

(5) Economically disadvantaged women-owned small business (EDWOSB) joint venture. The Contractor represents that it **[ ]** is, **[ ]** is not a joint venture that complies with the requirements of 13 CFR 127.506(a) and through (c). [The Contractor shall enter the name and unique entity identifier of each party to the joint venture: _____.]

(6) *[Complete only if the Contractor represented itself as a small business concern in paragraph (h)(1) of this clause.]*
The Contractor represents that it **[ ]** is, **[ ]** is not a veteran-owned small business concern.

(7) *[Complete only if the Contractor represented itself as a veteran-owned small business concern in paragraph (h)(6) of this clause.]*
The Contractor represents that it **[ ]** is, **[ ]** is not a service-disabled veteran-owned small business concern.

(8) *[Complete only if the Contractor represented itself as a small business concern in paragraph (h)(1) of this clause.]*
The Contractor represents that—

(i) It **[ ]** is, **[ ]** is not a HUBZone small business concern listed, on the date of this representation, on the List of Qualified HUBZone Small Business Concerns maintained by the Small Business Administration, and no material changes in ownership and control, principal office, or HUBZone employee percentage have occurred since it was certified in accordance with 13 CFR part 126; and

(ii) It **[ ]** is, **[ ]** is not a HUBZone joint venture that complies with the requirements of 13 CFR part 126, and the representation in paragraph (h)(8)(i) of this clause is accurate for each HUBZone small business concern participating in the HUBZone joint venture.
[The Contractor shall enter the names of each of the HUBZone small business concerns participating in the HUBZone joint venture: _____.]
Each HUBZone small business concern participating in the HUBZone joint venture shall submit a separate signed copy of the HUBZone representation.

[Contractor to sign and date and insert authorized signer's name and title.]

52.222-35 **EQUAL OPPORTUNITY FOR VETERANS** (JUN 2020)
(IAW FAR 22.1310(a)(1), DFARS 222.1310(a)(1))

(a) *Definitions*. As used in this clause--
"Active duty wartime or campaign badge veteran," "Armed Forces service medal veteran," "disabled veteran," "protected veteran," "qualified disabled veteran,' and "recently separated veteran" have the meanings given at Federal Acquisition Regulation (FAR) 22.1301.

(b) *Equal opportunity clause*. The Contractor shall abide by the requirements of the equal opportunity clause at 41 CFR 60-300.5(a), as of March 24, 2014. This clause prohibits discrimination against qualified protected veterans, and requires affirmative action by the Contractor to employ and advance in employment qualified protected veterans.

(c) Subcontracts. The Contractor shall insert the terms of this clause in subcontracts valued at or above the threshold specified in FAR 22.1303(a) on the date of subcontract award, unless exempted by rules, regulations, or orders of the Secretary of Labor. The Contractor shall act as specified by the Director, Office of Federal Contract Compliance Programs, to enforce the terms, including action for noncompliance. Such necessary changes in language may be made as shall be appropriate of identify properly the parties and their undertakings.

52.222-37 **EMPLOYMENT REPORTS ON VETERANS** (JUN 2020)
(IAW FAR 22.1310(b))

52.222-54 **EMPLOYMENT ELIGIBILITY VERIFICATION** (JAN 2025)
(IAW FAR 22.1803)

(c) *Web site*. Information on registration for and use of the E-Verify program can be obtained via the Internet at the Department of Homeland Security Web site: *https://www.e-Verify.gov* .

52.223-23 **SUSTAINABLE PRODUCTS AND SERVICES (DEVIATION 2025-O0004)** (MAR 2025)
(IAW 23.109(a))

252.223-7008 **PROHIBITION OF HEXAVALENT CHROMIUM** (JAN 2023)
(IAW DFARS 223.7306, DFARS 212.301(f)(xxi))

252.223-7009 **PROHIBITION OF PROCUREMENT OF FLUORINATED AQUEOUS FILM-FORMING FOAM FIRE-FIGHTING AGENT FOR USE ON MILITARY INSTALLATIONS** (MAR 2024)
(IAW DFARS 223.7404)

52.224-3 **PRIVACY TRAINING** (JAN 2017)
(IAW FAR 24.302(a))

252.225-7001 **BUY AMERICAN AND BALANCE OF PAYMENTS PROGRAM--BASIC** (FEB 2024)
(IAW DFARS 225.1101(2)(i) and (2)(ii))

252.225-7002 **QUALIFYING COUNTRY SOURCES AS SUBCONTRACTORS** (MAR 2022)
(IAW DFARS 225.1101(3))

252.225-7027 **RESTRICTION ON CONTINGENT FEES FOR FOREIGN MILITARY SALES** (APR 2003)
(IAW DFARS 225.7307(a))

(b) (1) For sales to the Government(s) of Australia, Taiwan, Egypt, Greece, Israel, Japan, Jordan, Republic of Korea, Kuwait, Pakistan, Philippines, Saudi Arabia, Turkey, Thailand, or Venezuela (Air Force), contingent fees in any amount.

252.225-7028 **EXCLUSIONARY POLICIES AND PRACTICES OF FOREIGN GOVERNMENTS** (APR 2003)
(IAW DFARS 225.7300, DFARS 225.7307(b))

252.225-7048 **EXPORT-CONTROLLED ITEMS** (JUN 2013)
(IAW DFARS 225.7901-4)

252.225-7972 **PROHIBITION ON THE PROCUREMENT OF FOREIGN-MADE UNMANNED AIRCRAFT SYSTEMS (AUG 2024) (DEVIATION 2024-O0014)** (AUG 2024)
(IAW Deviation 2024-O0014)

(a) *Definition.* As used in this clause—

Covered foreign country means any of the following:

(1) The People's Republic of China.

(2) The Russian Federation.

(3) The Islamic Republic of Iran.

(4) The Democratic People's Republic of Korea.

(b) *Prohibition*. In accordance with section 848 of the National Defense Authorization Act (NDAA) for Fiscal Year (FY) 2020 and section 817 of the NDAA for FY 2023, the Contractor shall not—

(1) Provide or use an unmanned aircraft system (UAS), or any related services or equipment, that—

(i) Is manufactured in a covered foreign country, or by an entity domiciled in a covered foreign country;

(ii) Uses flight controllers, radios, data transmission devices, cameras, or gimbals manufactured in a covered foreign country, or by an entity domiciled in a covered foreign country;

(iii) Uses a ground control system or operating software developed in a covered foreign country, or by an entity domiciled in a covered foreign country; or

(iv) Uses network connectivity or data storage located in, or administered by an entity domiciled in, a covered foreign country;

(2) Provide or use a system for the detection or identification of a UAS, or any related services or equipment, that is manufactured in a covered foreign country or by an entity domiciled in a covered foreign country; or

(3) On or after October 1, 2024, be an entity that operates equipment, as determined by the Secretary of Defense, from—

(i) Da-Jiang Innovations, or any subsidiary or affiliate of Da-Jiang Innovations;

(ii) Any entity that produces or provides unmanned aircraft systems and is included on the Consolidated Screening List maintained by the International Trade Administration of the Department of Commerce (*https://www.trade.gov/consolidated-screening-list*); or

(iii) Any entity that produces or provides unmanned aircraft systems and—

(A) Is domiciled in a covered foreign country; or

(B) Is subject to unmitigated foreign ownership, control, or influence by a covered foreign country, as determined by the Secretary of Defense in accordance with the National Industrial Security Program.

(c) *Subcontracts*. The Contractor shall insert the substance of this clause, including this paragraph (c), in all subcontracts or other contractual instruments, including subcontracts for the acquisition of commercial products and commercial services.

(End of clause)

52.226-8 **ENCOURAGING CONTRACTOR POLICIES TO BAN TEXT MESSAGING WHILE DRIVING** (MAY 2024)
(IAW FAR 26.605)

52.232-23 **ASSIGNMENT OF CLAIMS** (MAY 2014)
(IAW FAR 32.806(a)(1))

52.232-39 **UNENFORCEABILITY OF UNAUTHORIZED OBLIGATIONS** (JUN 2013)
(IAW FAR 32.706-3)

52.232-40 **PROVIDING ACCELERATED PAYMENTS TO SMALL BUSINESS SUBCONTRACTORS** (MAR 2023)
(IAW FAR 32.009-2)

252.232-7003 **ELECTRONIC SUBMISSION OF PAYMENT REQUESTS AND RECEIVING REPORTS** (DEC 2018)
(IAW DFARS 232.7004(a))

(a) Definitions. As used in this clause—
"Contract financing payment" means an authorized Government disbursement of monies to a contractor prior to acceptance of supplies or services by the Government.

(1) Contract financing payments include—
(i) Advance payments;
(ii) Performance-based payments;
(iii) Commercial advance and interim payments;
(iv) Progress payments based on cost under the clause at Federal Acquisition Regulation (FAR) 52.232-16, Progress Payments;
(v) Progress payments based on a percentage or stage of completion (see FAR 32.102(e)), except those made under the clause at FAR 52.232-5, Payments Under Fixed-Price Construction Contracts, or the clause at FAR 52.232-10, Payments Under Fixed-Price Architect-Engineer Contracts; and
(vi) Interim payments under a cost reimbursement contract, except for a cost reimbursement contract for services when Alternate I of the clause at FAR 52.232-25, Prompt Payment, is used.

(2) Contract financing payments do not include—
(i) Invoice payments;
(ii) Payments for partial deliveries; or
(iii) Lease and rental payments.

"Electronic form" means any automated system that transmits information electronically from the initiating system to affected systems.

"Invoice payment" means a Government disbursement of monies to a contractor under a contract or other authorization for supplies or services accepted by the Government.

(1) Invoice payments include—
(i) Payments for partial deliveries that have been accepted by the Government;
(ii) Final cost or fee payments where amounts owed have been settled between the Government and the contractor;
(iii) For purposes of subpart 32.9 only, all payments made under the clause at 52.232-5, Payments Under Fixed-Price Construction Contracts, and the clause at 52.232-10, Payments Under Fixed-Price Architect-Engineer Contracts; and
(iv) Interim payments under a cost-reimbursement contract for services when Alternate I of the clause at 52.232-25, Prompt Payment, is used.

(2) Invoice payments do not include contract financing payments.

"Payment request" means any request for contract financing payment or invoice payment submitted by the Contractor under this contract or task or delivery order.

"Receiving report" means the data prepared in the manner and to the extent required by Appendix F, Material Inspection and Receiving Report, of the Defense Federal Acquisition Regulation Supplement.

(b) Except as provided in paragraph (d) of this clause, the Contractor shall submit payment requests and receiving reports in electronic form using Wide Area WorkFlow (WAWF). The Contractor shall prepare and furnish to the Government a receiving report at the time of each delivery of supplies or services under this contract or task or delivery order.

(c) Submit payment requests and receiving reports to WAWF in one of the following electronic formats:
(1) Electronic Data Interchange.
(2) Secure File Transfer Protocol.
(3) Direct input through the WAWF website.

(d) The Contractor may submit a payment request and receiving report using methods other than WAWF only when—
(1) The Contractor has requested permission in writing to do so, and the Contracting Officer has provided instructions for a temporary alternative method of submission of payment requests and receiving reports in the contract administration data section of this contract or task or delivery order;
(2) DoD makes payment for commercial transportation services provided under a Government rate tender or a contract for transportation services using a DoD-approved electronic third party payment system or other exempted vendor payment/invoicing system (e.g., PowerTrack, Transportation Financial Management System, and Cargo and Billing System);
(3) DoD makes payment on a contract or task or delivery order for rendered health care services using the TRICARE Encounter Data System; or
(4) The Governmentwide commercial purchase card is used as the method of payment, in which case submission of only the receiving report in WAWF is required.

(e) Information regarding WAWF is available at https://wawf.eb.mil/.

(f) In addition to the requirements of this clause, the Contractor shall meet the requirements of the appropriate payment clauses in this contract when submitting payment requests.

252.232-7004 **DOD PROGRESS PAYMENT RATES (DEVIATION 2020-O0010, Revision 2)** (MAR 2020)
(IAW Deviation 2020-O0010, Revision 2)

252.232-7010 **LEVIES ON CONTRACT PAYMENTS** (DEC 2006)
(IAW DFARS 232.7102)

52.233-9001 **DISPUTES: AGREEMENT TO USE ALTERNATE DISPUTE RESOLUTION (ADR) (DLAD)** (DEC 2016)
(IAW DLADFARS 33.214)
(c) **If you wish to opt out of this clause, check here [ ].** Alternate wording may be negotiated with the contracting officer.

52.240-1 **PROHIBITION ON UNMANNED AIRCRAFT SYSTEMS MANUFACTURED OR ASSEMBLED BY AMERICAN SECURITY DRONE ACT-COVERED FOREIGN ENTITIES** (NOV 2024)
(IAW FAR 40.202-8)

52.243-1 **CHANGES--FIXED-PRICE** (AUG 1987)
(IAW FAR 43.205(a)(1))

252.243-7001 **PRICING OF CONTRACT MODIFICATIONS** (DEC 1991)
(IAW DFARS 243.205-70)

252.244-7000 **SUBCONTRACTS FOR COMMERCIAL ITEMS AND COMMERCIAL COMPONENTS (DOD CONTRACTS)** (NOV 2023)
(IAW DFARS 244.403)

252.246-7007 **CONTRACTOR COUNTERFEIT ELECTRONIC PART DETECTION AND AVOIDANCE SYSTEM** (JAN 2023)
(IAW DFARS 246.870-3(a))

252.246-7008 **SOURCES OF ELECTRONIC PARTS** (JAN 2023)
(IAW DFARS 246-870-3(b))

52.247-1 **COMMERCIAL BILL OF LADING NOTATIONS** (FEB 2006)
(IAW FAR 47.104-4(a), FAR 47.104-4(b))

252.247-7023 **TRANSPORTATION OF SUPPLIES BY SEA--BASIC** (OCT 2024)
(IAW DFARS 247.574(a) and (a)(1))

252.247-7028 **APPLICATION FOR U.S. GOVERNMENT SHIPPING DOCUMENTATION/INSTRUCTIONS** (JUN 2012)
(IAW DFARS 247.207)

52.249-1 **TERMINATION FOR CONVENIENCE OF THE GOVERNMENT (FIXED-PRICE) (SHORT FORM)** (APR 1984)
(IAW FAR 49.502(a)(1))

PART III - LIST OF DOCUMENTS, EXHIBITS, AND OTHER ATTACHMENTS
SECTION J
LIST OF ATTACHMENTS

Form Number	Description/File Name	Date	Number of Pages
DD FORM 1653	Transportation Data	05MAR2026	1
AFMC 158	Packaging Requirements	05MAR2026	1
DD FORM 2169	Special Packaging Instruction		5

PART IV - REPRESENTATIONS AND INSTRUCTIONS
SECTION K
REPRESENTATIONS, CERTIFICATIONS, AND OTHER STATEMENTS
OF OFFERORS OR RESPONDENTS

252.203-7005 **REPRESENTATION RELATING TO COMPENSATION OF FORMER DOD OFFICIALS** (SEP 2022)
(IAW DFARS 203.171-4(b))

52.204-8 **ANNUAL REPRESENTATIONS AND CERTIFICATIONS (DEVIATION 2025-O0003 and 2025-O0004)** (MAR 2025)
(IAW FAR 4.1202(a))

(a)(1) The North American Industry Classification System (NAICS) code for this acquisition is **336413** .

(2) The small business size standard is **1,250**.

(3) The small business size standard for a concern that submits an offer, other than on a construction or service acquisition, but proposes to furnish an end item that it did not itself manufacture, process, or produce is 500 employees if the acquisition—

(i) Is set aside for small business and has a value above the simplified acquisition threshold;

(ii) Uses the HUBZone price evaluation preference regardless of dollar value, unless the offeror waives the price evaluation preference; or

(iii) Is an 8(a), HUBZone, service-disabled veteran-owned, economically disadvantaged women-owned, or women-owned small business set-aside or sole-source award regardless of dollar value.

(b)(1) If the provision at 52.204-7, System for Award Management, is included in this solicitation, paragraph (d) of this provision applies.

(2) If the provision at 52.204–7, System for Award Management, is not included in this solicitation, and the Offeror has an active registration in the System for Award Management (SAM), the Offeror may choose to use paragraph (d) of this provision instead of completing the corresponding individual representations and certifications in the solicitation. The Offeror shall indicate which option applies by checking one of the following boxes:

[ ] (i) Paragraph (d) applies.

[ ] (ii) Paragraph (d) does not apply and the offeror has completed the individual representations and certifications in the solicitation.

(c)(1) The following representations or certifications in SAM are applicable to this solicitation as indicated:

(i) 52.203-2, Certificate of Independent Price Determination. This provision applies to solicitations when a firm-fixed-price contract or fixed-price contract with economic price adjustment is contemplated, unless—

(A) The acquisition is to be made under the simplified acquisition procedures in Part 13;

(B) The solicitation is a request for technical proposals under two-step sealed bidding procedures; or

(C) The solicitation is for utility services for which rates are set by law or regulation.

(ii) 52.203-11, Certification and Disclosure Regarding Payments to Influence Certain Federal Transactions. This provision applies to solicitations expected to exceed $200,000.

(iii) 52.203-18, Prohibition on Contracting with Entities that Require Certain Internal Confidentiality Agreements or Statements—Representation. This provision applies to all solicitations.

(iv) 52.204-3, Taxpayer Identification. This provision applies to solicitations that do not include the provision at 52.204-7, System for Award Management.

(v) 52.204-5, Women-Owned Business (Other Than Small Business). This provision applies to solicitations that—

(A) Are not set aside for small business concerns;

(B) Exceed the simplified acquisition threshold; and

(C) Are for contracts that will be performed in the United States or its outlying areas.

(vi) 52.204–26, Covered Telecommunications Equipment or Services—Representation. This provision applies to all solicitations.

(vii) 52.209-2, Prohibition on Contracting with Inverted Domestic Corporations—Representation.

(viii) 52.209-5, Certification Regarding Responsibility Matters. This provision applies to solicitations where the contract value is expected to exceed the simplified acquisition threshold.

(ix) 52.209-11, Representation by Corporations Regarding Delinquent Tax Liability or a Felony Conviction under any Federal Law. This provision applies to all solicitations.
(x) 52.214-14, Place of Performance--Sealed Bidding. This provision applies to invitations for bids except those in which the place of performance is specified by the Government.
(xi) 52.215-6, Place of Performance. This provision applies to solicitations unless the place of performance is specified by the Government.
(xii) 52.219–1, Small Business Program Representations (Basic, Alternates I, and II). This provision applies to solicitations when the contract is for supplies to be delivered or services to be performed in the United States or its outlying areas, or
when the contracting officer has applied part 19 in accordance with 19.000(b)(1)(ii).

(A) The basic provision applies when the solicitations are issued by other than DoD, NASA, and the Coast Guard.
(B) The provision with its Alternate I applies to solicitations issued by DoD, NASA, or the Coast Guard.
(C) The provision with its Alternate II applies to solicitations that will result in a multiple-award contract with more than one NAICS code assigned.

(xiii) 52.219–2, Equal Low Bids. This provision applies to solicitations when contracting by sealed bidding and the contract is for supplies to be delivered or services to be performed in the United States or its outlying areas, or when the contracting officer has applied part 19 in accordance with 19.000(b)(1)(ii).
(xiv) [Reserved]
(xv) [Reserved]
(xvi) 52.222-38, Compliance with Veterans' Employment Reporting Requirements. This provision applies to solicitations when it is anticipated the contract award will exceed the simplified acquisition threshold and the contract is not for acquisition of commercial products or commercial services.
(xvii) 52.223-1, Biobased Product Certification. This provision applies to solicitations that require the delivery or specify the use of biobased products in USDA-designated product categories; or include the clause at 52.223-2, Reporting of Biobased Products Under Service and Construction Contracts.
(xviii) 52.223-4, Recovered Material Certification. This provision applies to solicitations that are for, or specify the use of, EPA- designated items.
(xix) [Reserved]
(xx) 52.225-2, Buy American Certificate. This provision applies to solicitations containing the clause at 52.225-1.
(xxi) (xii) 52.225-4, Buy American-Free Trade Agreements-Israeli Trade Act Certificate. (Basic, Alternates II and III.) This provision applies to solicitations containing the clause at 52.225–3.

(A) If the acquisition value is less than $50,000, the basic provision applies.
(B) If the acquisition value is $50,000 or more but is less than $100,000, the provision with its Alternate II applies.
(C) If the acquisition value is $100,000 or more but is less than $102,280, the provision with its Alternate III applies.

(xxii) 52.225-6, Trade Agreements Certificate. This provision applies to solicitations containing the clause at 52.225-5.
(xxiii) 52.225-20, Prohibition on Conducting Restricted Business Operations in Sudan--Certification. This provision applies to all solicitations.
(xxiv) 52.225-25, Prohibition on Contracting with Entities Engaging in Certain Activities or Transaction Relating to Iran—Representation and Certifications. This provision applies to all solicitations.
(xxv) 52.226-2, Historically Black College or University and Minority Institution Representation. This provision applies to solicitations for research, studies, supplies, or services of the type normally acquired from higher educational institutions.

(2) The following representations or certifications are applicable as indicated by the Contracting Officer:
[Contracting Officer check as appropriate.]

X (i) 52.204-17, Ownership or Control of Offeror.
X (ii) 52.204-20, Predecessor of Offeror.
X (iii) 52.222-18, Certification Regarding Knowledge of Child Labor for Listed End Products.
(see note) (iv) 52.222-48, Exemption from Application of the Service Contract Labor Standards to Contracts for Maintenance, Calibration, or Repair of Certain Equipment -- Certification.). **(Note: If this clause is applicable it will be listed in the appropriate clause section of this document.**)
___ (v) 52.222-52 Exemption from Application of the Service Contract Labor Standards to Contracts for Certain Services--Certification.

(vi) 52.227-6, Royalty Information.
___(A) Basic.
___ (B) Alternate I.
___(vii) 52.227-15, Representation of Limited Rights Data and Restricted Computer Software.

(d) The Offeror has completed the annual representations and certifications electronically in SAM accessed through https://www.sam.gov. After reviewing the SAM information, the Offeror verifies by submission of the offer that the representations and certifications currently posted electronically that apply to this solicitation as indicated in paragraph (c) of this provision have been entered or updated within the last 12 months, are current, accurate, complete, and applicable to this solicitation (including the business size standard applicable to the NAICS code referenced for this solicitation), as of the date of this offer and are incorporated in this offer by reference (see FAR 4.1201); except for the changes identified below [offeror to insert changes, identifying change by clause number, title, date]. These amended representation(s) and/or certification(s) are also incorporated in this offer and are current, accurate, and complete as of the date of this offer.

FAR Clause #	Title	Date	Change

Any changes provided by the offeror are applicable to this solicitation only, and do not result in an update to the representations and certifications posted on SAM.

52.204-29 **FEDERAL ACQUISITION SUPPLY CHAIN SECURITY ACT ORDERS - REPRESENTATION AND DISCLOSURES** (DEC 2023)
(IAW FAR 4.2306(b))

252.204-7007 **ALTERNATE A, ANNUAL REPRESENTATIONS AND CERTIFICATIONS** (OCT 2025)
(IAW DFARS 204.1202)

Substitute the following paragraphs (b), (d), and (e) for paragraphs (b) and (d) of the provision at FAR 52.204-8:

(b)(1) If the provision at FAR 52.204-7, System for Award Management, is included in this solicitation, paragraph (e) of this provision applies.

(2) If the provision at FAR 52.204-7, System for Award Management, is not included in this solicitation, and the Offeror has an active registration in the System for Award Management (SAM), the Offeror may choose to use paragraph (e) of this provision instead of completing the corresponding individual representations and certifications in the solicitation. The Offeror shall indicate which option applies by checking one of the following boxes:

___ (i) Paragraph (e) applies.

___ (ii) Paragraph (e) does not apply and the Offeror has completed the individual representations and certifications in the solicitation.

(d) (1) The following representations or certifications in the SAM database are applicable to this solicitation as indicated:
(i) 252.204–7016, Covered Defense Telecommunications Equipment or Services—Representation. Applies to all solicitations.
(ii) 252.216-7008, Economic Price Adjustment--Wage Rates or Material Prices Controlled by a Foreign Government--Representation. Applies to solicitations for fixed-price supply and service contracts when the contract is to be performed wholly or in part in a foreign country, and a foreign government controls wage rates or material prices and may during contract performance impose a mandatory change in wages or prices of materials.
(iii) 252.225-7042, Authorization to Perform. Applies to all solicitations when performance will be wholly or in part in a foreign country.
(iv) 252.225-7049, Prohibition on Acquisition of Certain Foreign Commercial Satellite Services—Representation. Applies to solicitations for the acquisition of commercial satellite services.
(v) 252.225-7050, Disclosure of Ownership or Control by the Government of a Country that is a State Sponsor of Terrorism. Applies to all solicitations expected to result in contracts of $200,000 or more.
(vi) 252.229-7012, Tax Exemptions (Italy)--Representation. Applies to solicitations when contract performance will be in Italy.
(vii) 252.229-7013, Tax Exemptions (Spain)--Representation. Applies to solicitations when contract performance will be in Spain.

(2) The following representations or certifications in SAM are applicable to this solicitation as indicated by the Contracting Officer; **[*Contracting Officer check as appropriate.*]**

_____ (i) 252.209-7002, Disclosure of Ownership or Control by a Foreign Government.
_X_____ (ii) 252.225-7000, Buy American —Balance of Payments Program Certificate.
_____ (iii) 252.225-7020, Trade Agreements Certificate.
_____ Use with Alternate I
_____ (iv) 252.225-7031, Secondary Arab Boycott of Israel.
_____ (v) 252.225-7035, Buy American —Free Trade Agreements—Balance of Payments Program Certificate.
_____ Use with Alternate I.
_____ Use with Alternate II.
_____ Use with Alternate III.
_____ Use with Alternate IV.
_____ Use with Alternate V.
_____ (vi) 252.226-7002, Representation for Demonstration Project for Contractors Employing Persons with Disabilities.
_____ (vii) 252.232–7015, Performance-Based Payments—Representation.

(e) The Offeror has completed the annual representations and certifications electronically via the SAM website at https://www.sam.gov. After reviewing the SAM database information, the Offeror verifies by submission of the offer that the representations and certifications currently posted electronically that apply to this solicitation as indicated in FAR 52.204–8(c) and paragraph (d) of this provision have been entered or updated within the last 12 months, are current, accurate, complete, and applicable to this solicitation (including the business size standard applicable to the NAICS code referenced for this
solicitation), as of the date of this offer, and are incorporated in this offer by reference (see FAR 4.1201); except for the changes identified below [Offeror to insert changes, identifying change by provision number, title, date]. These amended representation(s) and/or certification(s) are also incorporated in this offer and are current, accurate, and complete as of the date of this offer.

FAR/DFARS Provision No.	Title	Date	Change

Any changes provided by the Offeror are applicable to this solicitation only, and do not result in an update to the representations and certifications located in the SAM database.

252.204-7008 **COMPLIANCE WITH SAFEGUARDING COVERED DEFENSE INFORMATION CONTROLS** (OCT 2016)
(IAW DFARS 204.7304(a))

252.204-7016 **COVERED DEFENSE TELECOMMUNICATIONS EQUIPMENT OR SERVICES -- REPRESENTATION** (DEC 2019)
(IAW 204.2105(a))

(a) Definitions. As used in this provision, covered defense telecommunications equipment or services has the meaning provided in the clause 252.204–7018, Prohibition on the Acquisition of Covered Defense Telecommunications Equipment or Services.
(b) Procedures. The Offeror shall review the list of excluded parties in the System for Award Management (SAM) (https:// www.sam.gov) for entities excluded from receiving federal awards for ''covered defense telecommunications equipment or services''.
(c) Representation. The Offeror represents that it [ ] does, [ ] does not provide covered defense telecommunications equipment or services as a part of its offered products or services to the Government in the performance of any contract, subcontract, or other contractual instrument.

252.204-7017 **PROHIBITION ON THE ACQUISITION OF COVERED DEFENSE TELECOMMUNICATIONS EQUIPMENT OR SERVICES--REPRESENTATION** (MAY 2021)
(IAW DFARS 204.2105(b))

The Offeror is not required to complete the representation in this provision if the Offeror has represented in the provision at 252.204–7016, Covered Defense Telecommunications Equipment or Services—Representation, that it ''does not provide covered defense telecommunications equipment or services as a part of its offered products or services to the Government in the performance of any contract, subcontract, or other contractual instrument.''

(a) Definitions. Covered defense telecommunications equipment or services, covered mission, critical technology, and substantial or essential component, as used in this provision, have the meanings given in the 252.204–7018 clause, Prohibition on the Acquisition of Covered Defense Telecommunications Equipment or Services, of this solicitation.

(b) Prohibition. Section 1656 of the National Defense Authorization Act for Fiscal Year 2018 (Pub. L. 115–91) prohibits agencies from procuring or obtaining, or extending or renewing a contract to procure or obtain, any equipment, system, or service to carry out covered missions that uses covered defense telecommunications equipment or services as a substantial or essential component of any system, or as critical technology as part of any system.

(c) Procedures. The Offeror shall review the list of excluded parties in the System for Award Management (SAM) at https:// www.sam.gov for entities that are excluded when providing any equipment, system, or service to carry out covered missions that uses covered defense telecommunications equipment or services as a substantial or essential component of any system, or as critical technology as part of any system, unless a waiver is granted.

(d) Representation. If in its annual representations and certifications in SAM the Offeror has represented in paragraph (c) of the provision at 252.204–7016, Covered Defense Telecommunications Equipment or Services—Representation, that it ''does'' provide covered defense telecommunications equipment or services as a part of its offered products or services to the Government in the performance of any contract, subcontract, or other contractual instrument, then the Offeror shall complete the following additional representation:

The Offeror represents that it [ ] will [ ] will not provide covered defense telecommunications equipment or services as a part of its offered products or services to DoD in the performance of any award resulting from this solicitation.

(e) Disclosures. If the Offeror has represented in paragraph (d) of this provision that it ''will provide covered defense telecommunications equipment or services,'' the Offeror shall provide the following information as part of the offer:

(1) A description of all covered defense telecommunications equipment and services offered (include brand or manufacturer; product, such as model number, original equipment manufacturer (OEM) number, manufacturer part number, or wholesaler number; and item description, as applicable).

(2) An explanation of the proposed use of covered defense telecommunications equipment and services and any factors relevant to determining if such use would be permissible under the prohibition referenced in paragraph (b) of this provision.

(3) For services, the entity providing the covered defense telecommunications services (include entity name, unique entity identifier, and Commercial and Government Entity (CAGE) code, if known).

(4) For equipment, the entity that produced or provided the covered defense telecommunications equipment (include entity name, unique entity identifier, CAGE code, and whether the entity was the OEM or a distributor, if known).

252.204-7019 **NOTICE OF NIST SP 800-171 DOD ASSESSMENT REQUIREMENTS** (NOV 2023)
(IAW DFARS 204.7304(d))

(a) *Definitions.*

"Basic Assessment", "Medium Assessment", and "High Assessment" have the meaning given in the clause 252.204-7020, NIST SP 800-171 DoD Assessments.

"Covered contractor information system" has the meaning given in the clause 252.204-7012, Safeguarding Covered Defense Information and Cyber Incident Reporting, of this solicitation.

(b) *Requirement.* In order to be considered for award, if the Offeror is required to implement NIST SP 800-171, the Offeror shall have a current assessment (i.e., not more than 3 years old unless a lesser time is specified in the solicitation) (see 252.204-7020) for each covered contractor information system that is relevant to the offer, contract, task order, or delivery order. The Basic, Medium, and High NIST SP 800-171 DoD Assessments are described in the NIST SP 800-171 DoD Assessment Methodology located at

https://www.acq.osd.mil/asda/dpc/cp/cyber/docs/safeguarding/NIST-SP-800-171-Assessment-Methodology-Version-1.2.1-6.24.2020.pdf

(c) *Procedures.*

(1) The Offeror shall verify that summary level scores of a current NIST SP 800-171 DoD Assessment (i.e., not more than 3 years old unless a lesser time is specified in the solicitation) are posted in the Supplier Performance Risk System (SPRS) (https://www.sprs.csd.disa.mil/) for all covered contractor information systems relevant to the offer.

(2) If the Offeror does not have summary level scores of a current NIST SP 800-171 DoD Assessment (i.e., not more than 3 years old unless a lesser time is specified in the solicitation) posted in SPRS, the Offeror may conduct and submit a Basic Assessment to webptsmh@navy.mil for posting to SPRS in the format identified in paragraph (d) of this provision.

(d) *Summary level scores.* Summary level scores for all assessments will be posted 30 days post-assessment in SPRS to provide DoD Components visibility into the summary level scores of strategic assessments.

(1) *Basic Assessments.* An Offeror may follow the procedures in paragraph (c)(2) of this provision for posting Basic Assessments to SPRS.

(i) The email shall include the following information:

(A) Cybersecurity standard assessed (e.g., NIST SP 800-171 Rev 1).

(B) Organization conducting the assessment (e.g., Contractor self-assessment).

(C) For each system security plan (security requirement 3.12.4) supporting the performance of a DoD contract—

(*1*) All industry Commercial and Government Entity (CAGE) code(s) associated with the information system(s) addressed by the system security plan; and

(*2*) A brief description of the system security plan architecture, if more than one plan exists.

(D) Date the assessment was completed.

(E) Summary level score (e.g., 95 out of 110, NOT the individual value for each requirement).

(F) Date that all requirements are expected to be implemented (i.e., a score of 110 is expected to be achieved) based on information gathered from associated plan(s) of action developed in accordance with NIST SP 800-171.

(ii) If multiple system security plans are addressed in the email described at paragraph (d)(1)(i) of this section, the Offeror shall use the following format for the report:

System Security Plan	CAGE Codes supported by this plan	Brief description of the plan architecture	Date of assessment	Total Score	Date score of 110 will achieved

(2) *Medium and High Assessments.* DoD will post the following Medium and/or High Assessment summary level scores to SPRS for each system assessed:

(i) The standard assessed (e.g., NIST SP 800-171 Rev 1).

(ii) Organization conducting the assessment, e.g., DCMA, or a specific organization (identified by Department of Defense Activity Address Code (DoDAAC)).

(iii) All industry CAGE code(s) associated with the information system(s) addressed by the system security plan.

(iv) A brief description of the system security plan architecture, if more than one system security plan exists.

(v) Date and level of the assessment, i.e., medium or high.

(vi) Summary level score (e.g., 105 out of 110, not the individual value assigned for each requirement).

(vii) Date that all requirements are expected to be implemented (i.e., a score of 110 is expected to be achieved) based on information gathered from associated plan(s) of action developed in accordance with NIST SP 800-171.

(3) *Accessibility*.

(i) Assessment summary level scores posted in SPRS are available to DoD personnel, and are protected, in accordance with the standards set forth in DoD Instruction 5000.79, Defense-wide Sharing and Use of Supplier and Product Performance Information (PI).

(ii) Authorized representatives of the Offeror for which the assessment was conducted may access SPRS to view their own summary level scores, in accordance with the SPRS Software User's Guide for Awardees/Contractors available at https://www.sprs.csd.disa.mil/pdf/SPRS_Awardee.pdf.

(iii) A High NIST SP 800-171 DoD Assessment may result in documentation in addition to that listed in this section. DoD will retain and protect any such documentation as "Controlled Unclassified Information (CUI)" and intended for internal DoD use only. The information will be protected against unauthorized use and release, including through the exercise of applicable exemptions under the Freedom of Information Act (e.g., Exemption 4 covers trade secrets and commercial or financial information obtained from a contractor that is privileged or confidential).

52.207-4 **ECONOMIC PURCHASE QUANTITY--SUPPLIES** (AUG 1987)
(IAW FAR 7.203)

(a) Offerors are invited to state an opinion on whether the quantity(ies) of supplies on which bids, proposals or quotes are requested in this solicitation is (are) economically advantageous to the Government.

_____
_____
_____
_____
_____

(b) Each offeror who believes that acquisitions in different quantities would be more advantageous is invited to recommend an economic purchase quantity. If different quantities are recommended, a total and a unit price must be quoted for applicable items. An economic purchase quantity is that quantity at which a significant price break occurs. If there are significant price breaks at different quantity points, this information is desired as well.

OFFEROR RECOMMENDATIONS

ITEM	QUANTITY	QUOTATION	PRICE TOTAL

(c) The information requested in this provision is being solicited to avoid acquisitions in disadvantageous quantities and to assist the Government in developing a data base for future acquisitions of these items. However, the Government reserves the right to amend or cancel the solicitation and re-solicit with respect to any individual item in the event quotations received and the Government's requirements indicate that different quantities should be acquired.

52.209-11 REPRESENTATION BY CORPORATIONS REGARDING DELINQUENT TAX LIABILITY OR A FELONY CONVICTION UNDER ANY FEDERAL LAW (FEB 2016)
(IAW FAR 9.104-7(d))

(b) The Offeror represents that—

(1) It **is [ ] is not [ ]** a corporation that has any unpaid Federal tax liability that has been assessed, for which all judicial and administrative remedies have been exhausted or have lapsed, and that is not being paid in a timely manner pursuant to an agreement with the authority responsible for collecting the tax liability; and

(2) It **is [ ] is not [ ]** a corporation that was convicted of a felony criminal violation under a Federal law within the preceding 24 months.

252.209-7011 REPRESENTATION FOR RESTRICTION ON THE USE OF CERTAIN INSTITUTIONS OF HIGHER EDUCATION (AUG 2025)
(IAW DFARS 209.170-4)

THE FOLLOWING IS FILL-IN DATA FOR PROVISION 52.204-8 PARA (c)(2)(iii):

52.222-18 CERTIFICATION REGARDING KNOWLEDGE OF CHILD LABOR FOR LISTED END PRODUCTS (FEB 2021)

(b) *Listed end products*. The following end product(s) being acquired under this solicitation is (are) included in the List of Products Requiring Contractor Certification as to Forced or Indentured Child Labor, identified by their country of origin. There is a reasonable basis to believe that listed end products from the listed countries of origin may have been mined, produced, or manufactured by forced or indentured child labor.

Listed end product	Listed countries of origin
_____	_____
_____	_____
_____	_____

(c) *Certification*. The Government will not make award to an offeror unless the offeror, by checking the appropriate block, certifies to either paragraph (c)(1) or paragraph (c)(2) of this provision.

[ ] (1) The offeror will not supply any end product listed in paragraph (b) of this provision that was mined, produced, or manufactured in a corresponding country as listed for that end product.

[ ] (2) The offeror may supply an end product listed in paragraph (b) of this provision that was mined, produced, or manufactured in the corresponding country as listed for that product. The offeror certifies that it has made a good faith effort to determine whether forced or indentured child labor was used to mine, produce, or manufacture such end product. On the basis of those efforts, the offeror certifies that it is not aware of any such use of child labor.

52.222-38 **COMPLIANCE WITH VETERANS' EMPLOYMENT REPORTING REQUIREMENTS** (FEB 2016)
(IAW FAR 22.1310(c))

52.223-22 **PUBLIC DISCLOSURE OF GREENHOUSE GAS EMISSIONS AND REDUCTION GOALS--REPRESENTATION** (DEC 2016)
(IAW FAR 23.502)

(a) This representation shall be completed if the Offeror received $7.5 million or more in Federal contract awards in the prior Federal fiscal year. The representation is optional if the Offeror received less than $7.5 million in Federal contract awards in the prior Federal fiscal year.

(b) Representation. [*Offeror is to check applicable blocks in paragraphs (b)(1) and (2)*.]

(1) The Offeror (itself or through its immediate owner or highest-level owner) **[ ] does, [ ] does not** publicly disclose greenhouse gas emissions, i.e., make available on a publicly accessible Web site the results of a greenhouse gas inventory, performed in accordance with an accounting standard with publicly available and consistently applied criteria, such as the Greenhouse Gas Protocol Corporate Standard.

(2) The Offeror (itself or through its immediate owner or highest-level owner) **[ ] does, [ ] does not** publicly disclose a quantitative greenhouse gas emissions reduction goal, i.e., make available on a publicly available Web site a target to reduce absolute emissions or emissions intensity by a specific quantity or percentage.

(3) A publicly accessible Web site includes the Offeror's own Web site or a recognized, third-party greenhouse gas emissions reporting program.

(c) If the Offeror checked “does” in paragraphs (b)(1) or (b)(2) of this provision, respectively, the Offeror shall provide the publicly accessible Web site(s) where greenhouse gas emissions and/or reduction goals are reported:_____.

52.225-18 **PLACE OF MANUFACTURE** (AUG 2018)
(IAW FAR 25.1101(f))

(a) *Definitions*. As used in this provision—

“Manufactured end product” means any end product and service codes (PSCs) 1000-9999, except—

(1) PSC 5510, Lumber and Related Basic Wood Materials;
(2) Product Service Group (PSG) 87, Agricultural Supplies;
(3) PSG 88, Live Animals;
(4) PSG 89, Subsistence;
(5) PSC 9410, Crude Grades of Plant Materials;
(6) PSC 9430, Miscellaneous Crude Animal Products, Inedible;
(7) PSC 9440, Miscellaneous Crude Agricultural and Forestry Products;
(8) PSC 9610, Ores;
(9) PSC 9620, Minerals, Natural and Synthetic; and
(10) PSC 9630, Additive Metal Materials.

“Place of manufacture” means the place where an end product is assembled out of components, or otherwise made or processed from raw materials into the finished product that is to be provided to the Government. If a product is disassembled and reassembled, the place of reassembly is not the place of manufacture.

(b) For statistical purposes only, the offeror shall indicate whether the place of manufacture of the end products it expects to provide in response to this solicitation is predominantly—

(1) **[ ] In the United States** (Check this box if the total anticipated price of offered end products manufactured in the United States exceeds the total anticipated price of offered end products manufactured outside the United States); or
(2) **[ ] Outside the United States**.

252.239-7098 **PROHIBITION ON CONTRACTING TO MAINTAIN OR ESTABLISH A COMPUTER NETWORK UNLESS SUCH NETWORK IS DESIGNED TO BLOCK ACCESS TO CERTAIN WEBSITES--REPRESENTATION (DEVIATION 2021-O0003)** (APR 2021)
(IAW Deviation 2021-O0003)

(a) In accordance with section 8116 of Division C of the Consolidated Appropriations Act, 2021 (Pub. L. 116-260), or any other Act that extends to fiscal year 2021 funds the same prohibitions, none of the funds appropriated (or otherwise made available) by this or any other Act for DoD may be used to enter into a contract to maintain or establish a computer network unless such network is designed to block access to pornography websites. This prohibition does not limit the use of funds necessary for any Federal, State, tribal, or local law enforcement agency or any other entity carrying out criminal investigations, prosecution, or adjudication activities, or for any activity necessary for the national defense, including intelligence activities.

(b*) Representation*. By submission of its offer, the Offeror represents that it is not providing as part of its offer a proposal to maintain or establish a computer network unless such network is designed to block access to pornography websites.

PART IV - REPRESENTATIONS AND INSTRUCTIONS
SECTION L
INSTRUCTIONS, CONDITIONS, AND NOTICES TO OFFERORS OR RESPONDENTS

52.204-7 **SYSTEM FOR AWARD MANAGEMENT** (NOV 2024)
(IAW FAR 4.1105(a)(1))

52.204-16 **COMMERCIAL AND GOVERNMENT ENTITY CODE REPORTING** (AUG 2020)
(IAW FAR 4.1804(a), FAR 12.301(d))

52.204-22 **ALTERNATIVE LINE ITEM PROPOSAL** (JAN 2017)
(IAW FAR 4.1008)

52.204-24 **REPRESENTATION REGARDING CERTAIN TELECOMMUNICATIONS AND VIDEO SURVEILLANCE SERVICES OR EQUIPMENT** (NOV 2021)
(IAW FAR 4.2105(a))

The Offeror shall not complete the representation at paragraph (d)(1) of this provision if the Offeror has represented that it ''does not provide covered telecommunications equipment or services as a part of its offered products or services to the Government in the performance of any contract, subcontract, or other contractual instrument'' in paragraph (c)(1) in the provision at 52.204–26, Covered Telecommunications Equipment or Services—Representation, or in paragraph (v)(2)(i) of the provision at 52.212–3, Offeror Representations and Certifications–Commercial Products and Commercial Services. The Offeror shall not complete the representation in paragraph (d)(2) of this provision if the Offeror has represented that it ''does not use covered telecommunications equipment or services, or any equipment, system, or service that uses covered telecommunications equipment or services'' in paragraph (c)(2) of the provision at 52.204–26, or in paragraph (v)(2)(ii) of the provision at 52.212–3.

(a) *Definitions.* As used in this provision-

Backhaul, covered telecommunications equipment or services, critical technology, interconnection arrangements, reasonable inquiry, roaming, and *substantial or essential component* have the meanings provided in the clause 52.204-25, Prohibition on Contracting for Certain Telecommunications and Video Surveillance Services or Equipment.

(b) *Prohibition.* (1) Section 889(a)(1)(A) of the John S. McCain National Defense Authorization Act for Fiscal Year 2019 (Pub. L. 115-232) prohibits the head of an executive agency on or after August 13, 2019, from procuring or obtaining, or extending or renewing a contract to procure or obtain, any equipment, system, or service that uses covered telecommunications equipment or services as a substantial or essential component of any system, or as critical technology as part of any system. Nothing in the prohibition shall be construed to—

(i) Prohibit the head of an executive agency from procuring with an entity to provide a service that connects to the facilities of a third-party, such as backhaul, roaming, or interconnection arrangements; or

(ii) Cover telecommunications equipment that cannot route or redirect user data traffic or cannot permit visibility into any user data or packets that such equipment transmits or otherwise handles.

(2) Section 889(a)(1)(B) of the John S. McCain National Defense Authorization Act for Fiscal Year 2019 (Pub. L. 115-232) prohibits the head of an executive agency on or after August 13, 2020, from entering into a contract or extending or renewing a contract with an entity that uses any equipment, system, or service that uses covered telecommunications equipment or services as a substantial or essential component of any system, or as critical technology as part of any system. This prohibition applies to the use of covered telecommunications equipment or services, regardless of whether that use is in performance of work under a Federal contract. Nothing in the prohibition shall be construed to—

(i) Prohibit the head of an executive agency from procuring with an entity to provide a service that connects to the facilities of a third-party, such as backhaul, roaming, or interconnection arrangements; or

(ii) Cover telecommunications equipment that cannot route or redirect user data traffic or cannot permit visibility into any user data or packets that such equipment transmits or otherwise handles.

(c) *Procedures.* The Offeror shall review the list of excluded parties in the System for Award Management (SAM) (*https://www.sam.gov*) for entities excluded from receiving federal awards for "covered telecommunications equipment or services."

(d) *Representations.* The Offeror represents that—

(1) It [ ] will, [ ] will not provide covered telecommunications equipment or services to the Government in the performance of any contract, subcontract or other contractual instrument resulting from this solicitation. The Offeror shall provide the additional disclosure information required at paragraph (e)(1) of this section if the Offeror responds "will" in paragraph (d)(1) of this section; and

(2) After conducting a reasonable inquiry, for purposes of this representation, the Offeror represents that—

It [ ] does, [ ] does not use covered telecommunications equipment or services, or use any equipment, system, or service that uses covered telecommunications equipment or services. The Offeror shall provide the additional disclosure information required at paragraph (e)(2) of this section if the Offeror responds "does" in paragraph (d)(2) of this section.

(e) *Disclosures.* (1) Disclosure for the representation in paragraph (d)(1) of this provision. If the Offeror has responded "will" in the representation in paragraph (d)(1) of this provision, the Offeror shall provide the following information as part of the offer:

(i) For covered equipment—

(A) The entity that produced the covered telecommunications equipment (include entity name, unique entity identifier, CAGE code, and whether the entity was the original equipment manufacturer (OEM) or a distributor, if known);

(B) A description of all covered telecommunications equipment offered (include brand; model number, such as OEM number, manufacturer part number, or wholesaler number; and item description, as applicable); and

(C) Explanation of the proposed use of covered telecommunications equipment and any factors relevant to determining if such use would be permissible under the prohibition in paragraph (b)(1) of this provision.

(ii) For covered services—

(A) If the service is related to item maintenance: A description of all covered telecommunications services offered (include on the item being maintained: Brand; model number, such as OEM number, manufacturer part number, or wholesaler number; and item description, as applicable); or

(B) If not associated with maintenance, the Product Service Code (PSC) of the service being provided; and explanation of the proposed use of covered telecommunications services and any factors relevant to determining if such use would be permissible under the prohibition in paragraph (b)(1) of this provision.

(2) Disclosure for the representation in paragraph (d)(2) of this provision. If the Offeror has responded “does” in the representation in paragraph (d)(2) of this provision, the Offeror shall provide the following information as part of the offer:

(i) For covered equipment—

(A) The entity that produced the covered telecommunications equipment (include entity name, unique entity identifier, CAGE code, and whether the entity was the OEM or a distributor, if known);

(B) A description of all covered telecommunications equipment offered (include brand; model number, such as OEM number, manufacturer part number, or wholesaler number; and item description, as applicable); and

(C) Explanation of the proposed use of covered telecommunications equipment and any factors relevant to determining if such use would be permissible under the prohibition in paragraph (b)(2) of this provision.

(ii) For covered services—

(A) If the service is related to item maintenance: A description of all covered telecommunications services offered (include on the item being maintained: Brand; model number, such as OEM number, manufacturer part number, or wholesaler number; and item description, as applicable); or

(B) If not associated with maintenance, the PSC of the service being provided; and explanation of the proposed use of covered telecommunications services and any factors relevant to determining if such use would be permissible under the prohibition in paragraph (b)(2) of this provision.

(End of provision)

52.204-26 COVERED TELECOMMUNICATIONS EQUIPMENT OR SERVICES - REPRESENTATION (OCT 2020)
(IAW FAR 4.2105(c))

(a) *Definitions.* As used in this provision, “covered telecommunications equipment or services” and ‘‘reasonable inquiry’’ have the meaning provided in the clause 52.204-25, Prohibition on Contracting for Certain Telecommunications and Video Surveillance Services or Equipment.

(b) *Procedures.* The Offeror shall review the list of excluded parties in the System for Award Management (SAM) (https://www.sam.gov) for entities excluded from receiving federal awards for “covered telecommunications equipment or services”.

(c) *Representations.*

(1) The Offeror represents that it [ ] does, [ ] does not provide covered telecommunications equipment or services as a part of its offered products or services to the Government in the performance of any contract, subcontract, or other contractual instrument.

(2) After conducting a reasonable inquiry for purposes of this representation, the offeror represents that it [ ] does, [ ] does not use covered telecommunications equipment or services, or any equipment, system, or service that uses covered telecommunications equipment or services.

252.204-7024 NOTICE ON THE USE OF THE SUPPLIER PERFORMANCE RISK SYSTEM (MAR 2023)
(IAW DFARS 204.7604)

(a) *Definitions.* As used in this provision—

Item risk means the probability that a product, based on intended use, will introduce performance risk resulting in safety issues, mission degradation, or monetary loss.

Price risk means a measure of whether a proposed price for a product or service is consistent with historical prices paid for that item or service.

Supplier risk means the probability that an award may subject the procurement to the risk of unsuccessful performance or to supply chain risk (see Defense Federal Acquisition Regulation Supplement 239.7301).

(b) The Supplier Performance Risk System (SPRS), available at *https://piee.eb.mil/,* will be used in the evaluation of the Quoter or Offeror's performance. SPRS retrieves item, price, quality, delivery, and contractor information on contracts from Government reporting systems in order to develop risk assessments.

(c) The Contracting Officer will consider SPRS risk assessments during the evaluation of quotations or offers received in response to this solicitation as follows:

(1) Item risk will be considered to determine whether the procurement represents a high performance risk to the Government.
(2) Price risk will be considered in determining if a proposed price is consistent with historical prices paid for a product or a service or otherwise creates a risk to the Government.
(3) Supplier risk, including but not limited to quality and delivery, will be considered to assess the risk of unsuccessful performance and supply chain risk.

(d) SPRS risk assessments are generated daily. Quoters or Offerors are able to access their risk assessments by following the access instructions in the SPRS user's guide available at *https://www.sprs.csd.disa.mil/reference.htm.* Quoters and Offerors are granted access to SPRS for their own risk assessment classifications only. SPRS reporting procedures and risk assessment methodology are detailed in the SPRS user's guide. The method to challenge a rating generated by SPRS is also provided in the user's guide. SPRS evaluation criteria are available at *https://www.sprs.csd.disa.mil/pdf/SPRS_DataEvaluationCriteria.pdf.*

(e) The Contracting Officer may consider any other available and relevant information when evaluating a quotation or an offer.

52.211-14 **NOTICE OF PRIORITY RATING FOR NATIONAL DEFENSE, EMERGENCY PREPAREDNESS, AND ENERGY PROGRAM USE** (APR 2008)
(IAW FAR 11.604(a))

Note: DX or DO rating will be completed on cover page.

252.215-7013 **SUPPLIES AND SERVICES PROVIDED BY NONTRADITIONAL DEFENSE CONTRACTORS** (JAN 2023)
(IAW DFARS 215.408(6))

252.225-7973 **PROHIBITION ON THE PROCUREMENT OF FOREIGN-MADE UNMANNED AIRCRAFT SYSTEMS-REPRESENTATION (AUG 2024) (DEVIATION 2024-O0014)** (AUG 2024)
(IAW DEVIATION 2024-O0014)

(a) *Definition*. As used in this provision, "covered foreign country" has the meaning given in the 252.225-7972, Prohibition on the Procurement of Foreign-Made Unmanned Aircraft Systems (DEVIATION 2024-O0014), clause of this solicitation.

(b) *Prohibition*. Section 848 of the National Defense Authorization Act (NDAA) for Fiscal Year (FY) 2020 (Pub. L. 116-92) and section 817 of the NDAA for FY 2023 (Pub. L. 117-263) prohibit DoD from—

(1) Using or procuring an unmanned aircraft system (UAS), or any related services or equipment, that—

(i) Is manufactured in a covered foreign country, or by an entity domiciled in a covered foreign country;

(ii) Uses flight controllers, radios, data transmission devices, cameras, or gimbals manufactured in a covered foreign country, or by an entity domiciled in a covered foreign country;

(iii) Uses a ground control system or operating software developed in a covered foreign country, or by an entity domiciled in a covered foreign country; or

(iv) Uses network connectivity or data storage located in, or administered by an entity domiciled in, a covered foreign country;

(2) Using or procuring a system for the detection or identification of a UAS, or any related services or equipment, that is manufactured in a covered foreign country or by an entity domiciled in a covered foreign country; or

(3) On or after October 1, 2024, entering into or renewing a contract with an entity that operates, as determined by the Secretary of Defense, equipment from—

(i) Da-Jiang Innovations (or any subsidiary or affiliate of Da-Jiang Innovations);

(ii) Any entity that produces or provides unmanned aircraft systems and is included on the Consolidated Screening List maintained by the International Trade Administration of the Department of Commerce (*https://www.trade.gov/consolidated-screening-list*); or

(iii) Any entity that produces or provides unmanned aircraft systems and—

(A) Is domiciled in a covered foreign country; or

(B) Is subject to unmitigated foreign ownership, control, or influence by a covered foreign country, as determined by the Secretary of Defense in accordance with the National Industrial Security Program.

(c) *Representations*.

(1) By submission of its offer, the Offeror represents that—

(i) It will not provide or use a UAS, as described in paragraph (b)(1) of this provision, in the performance of any contract, subcontract, or other contractual instrument resulting from this solicitation; and

(ii) It will not provide or use a system for the detection or identification of a UAS, as described in paragraph (b)(2) of this provision, in the performance of any contract, subcontract, or other contractual instrument resulting from this solicitation.

(2) It is not an entity described in paragraph (b)(3) of this provision.

(End of provision)

52.247-46 **SHIPPING POINT(S) USED IN EVALUATION OF F.O.B. ORIGIN OFFERS** (APR 1984)
(IAW FAR 47.305-3(b)(4)(ii))

52.252-1 **SOLICITATION PROVISIONS INCORPORATED BY REFERENCE** (FEB 1998)
(IAW FAR 52.107(a))

This solicitation incorporated one or more solicitation provisions by reference, with the same force and effect as if they were given in full text. Upon request, the Contracting Officer will make their full text available.

The full text of a clause may be accessed electronically at this/these address(es): Regulations URLs: (Click on the appropriate regulation.)
https://acquisition.gov/browse/index/far
https://acquisition.gov/dfars
https://acquisition.gov/affars

NOTE: After selecting the appropriate regulation above, at the "Table of Contents" page conduct a search for the desired regulation reference, using your browser's **FIND** function. When located, click on the **regulation reference** (hyperlink).

PART IV - REPRESENTATIONS AND INSTRUCTIONS
SECTION M
EVALUATION FACTORS FOR AWARD

EVALUATION CRITERIA FOR AWARD (OCT 1997)
(IAW FAR 13.106-2(b), FAR 14.201-5(c), FAR 15.204-5(c))

For the purposes of award, offers will be evaluated based on the following factors, listed in descending order of importance:

Evaluation Factors	Order of Importance
Price or Cost	**01**
Technical	**02**

All evaluation factors other than cost or price, when combined, are **Significantly Less Important than Cost or Price** .

NOTICE FOR OPTIONS: Price will be evaluated by adding the extended prices for basic award and option quantities, if applicable.

52.247-47 **EVALUATION-F.O.B. ORIGIN** (JUN 2003)
(IAW FAR 47.305-3(f)(2))

(a) The Government normally uses _____*_____ methods of transportation by regulated common carrier for shipment within the contiguous United States.

* ITEM NO	MODE OF TRANSPORTATION
0001	Surface

TRANSPORTATION DATA FOR SOLICITATIONS

PURCHASE INSTRUMENT NUMBER: FD20302601415-00	**DATE INITIATED:** 05 MAR 2026
COMMODITY: See Continuation	**STOCK NUMBER:** See Continuation

F.O.B. TERMS RECOMMENDED AS BEST SUITED FOR THIS PROCUREMENT

[X] ORIGIN [ ] DESTINATION [ ] OTHER *(Specify)* [ ] DATA / FIRST ARTICLE F.O.B. DESTINATION

TRANSPORTATION PROVISIONS / CLAUSES	FAR CITATION
F.O.B. Origin	52.247-29
Clearance and Documentation Requirements	52.247-52
Freight Classification Description	52.247-53
Marking of Shipments	47.305-10
Evidence of Shipment FMS	352.225-U037U
Contact DCMA Transportation Contact DCMA Transportation on ALL "DCMA Administered" contracts prior to shipment for shipping instructions using the DCMA Shipment Instruction Request (SIR) eTool System, at http://www.dcma.mil <http://www.dcma.mil/> for ALL FOB: Origin, Foreign Military Sales (FMS), and FOB: Destination OCONUS/Export movements to obtain the appropriate DOD regulatory clearances, shipping documentation and instructions from your cognizant DCMA Transportation Office. If you are new to DCMA, and do not already have a SIR eTool account, you will first need to request an account via DCMA External Web Access Management (EWAM) application which can be accessed at http://www.dcma.mil. If you need additional assistance, email DCMA Transportation Group at: Transportation.Division@dcma.mil. Do not move any freight to a water or aerial port prior to contacting DCMA or it will become frustrated. Failure to contact the responsible DCMA may result in vendor incurring additional expenditures.	Vendor Transportation Instructions

TACRN:

AAA

TRANSPORTATION FUNDS INFORMATION:

Purchase Instrument Line LOA: 9711X8242.0002 4FX LC5W CSAAEC 000000 00000 002000 503000 F03000 FSR: 110300 PSR: 844136

First Destination Transportation Account Code: DFMS

Miscellaneous Obligation / Reimbursement Document:

Second Destination Transportation Account Code:

FMS LOA: 9711X8242.0002 4FX LC5W CSAAEC 000000 00000 0

Additional Funding Information:

ITEM / SHIP TO(s):

NSN / Pseudo NSN: 1650011344415

Requisition Number: DECP5460420040

Purchase Instrument Line Item Number: 0001

Supplemental Address: DA5SAA

Ship to (DoDAAC / MAPAC): DEC005

FMS Case: SAA

Mark For: DECP00

Ship To (Address):

WPOD:

APOD:

BBP / CCP:

RIC:

Ship To (Remarks): TAC:DFMS

EVALUATION OF PORT BID OR PROPOSAL:

SOLICITATION DATA NOTES:

OTHER TRANSPORTATION DATA:

NAME	ORGANIZATION / OFFICE SYMBOL	COMMERCIAL / DSN PHONE	SIGNATURE	DATE
Hogan, Darrick D	406 SCMS / GULAA	478-327-3489 / 497-3489	//SIGNED//Hogan, Darrick D	05 MAR 2026

PACKAGING REQUIREMENTS

PURCHASE INSTRUMENT NUMBER: FD20302601415-00	**VERSION:** 1
MIL-STD 129 REVISION: R	**MIL-STD 2073-1 REVISION:** E

THE FOLLOWING STATEMENT IS IN COMPLIANCE WITH THE UNITED NATIONS-IMPLEMENTED RESTRICTIONS ON WOOD PACKAGING MATERIAL (WPM). THIS REQUIREMENT IS SPECIFICALLY CONCERNED WITH INVASIVE SPECIES SUCH AS THE PINEWOOD NEMATODE. WPM IS DEFINED AS WOOD PALLETS, SKIDS, LOAD BOARDS, PALLET COLLARS, WOODEN BOXES, REELS, DUNNAGE, CRATES, FRAMES, AND CLEATS. THE STATEMENT BELOW CITES THE REQUIREMENTS IN DETAIL AND COVERS LUMBER FOR BUILDING CONTAINERS AND PALLETS USED FOR DELIVERIES RESULTING IN SHIPMENTS WORLDWIDE (DIRECT, OR THROUGH AIR LOGISTICS CENTERS (ALC), CONTAINER CONSOLIDATION POINTS (CCP), OR OTHER BASES). WOODEN LUMBER, WOODEN PALLET AND PACKAGING/CONTAINER STATEMENT:
ALL WOODEN LUMBER, WOODEN PALLET'S, AND WOODEN CONTAINERS PRODUCED ENTIRELY OR IN PART OF WOOD PACKING MATERIAL (WPM) SHALL BE CONSTRUCTED FROM DEBARKED WOOD IN ADDITION TO THE APPLICATION OF HEAT-TREATED (HT) MATERIAL (HT TO 56 DEGREES CENTIGRADE OR 133 DEGREES FAHRENHEIT FOR 30 MINUTES). CERTIFICATION/MARKING IS REQUIRED BY AN ACCREDITED AGENCY RECOGNIZED BY THE AMERICAN LUMBER STANDARDS COMMITTEE (ALSC). FOR REFERENCE DOCUMENTATION, SEE LATEST REVISION OF "INTERNATIONAL STANDARDS FOR PHYTOSANITARY MEASURES" (ISPM)NO.15), "REGULATION OF WOOD PACKAGING MATERIAL IN INTERNATIONAL TRADE."

PACRN:	PACKAGING REQUIREMENT:	PRESERVATION LEVEL:	PACKAGING LEVEL:	SPI:	SPI REV:	SPI DATE:
AAA	MIL-STD-2073-1 / SPI	MIL	B	F007849692	B	20044 - 13 FEB 2020

ITEM(S):

1650011344415

CODED DATA:

QUP	ICQ	PRES METH	CD	PRES MTL	WRAP MTL	CUSH DUNN	CT	UNIT CONT	INT CONT	UCL	SPEC MKG	UNIT PACK WEIGHT	UNIT PACK LENGTH	UNIT PACK WIDTH	UNIT PACK DEPTH	UNIT PACK CUBE	OPI

ADDITIONAL PACKAGING AND CONTAINER MARKING REQUIREMENTS:

SUPPLEMENTAL PACKAGING INSTRUCTION TEXT:

VENDOR PACKAGING INSTRUCTIONS:

Military Packaging and Marking
Items shall be packaged in accordance with MIL-STD-2073-1, Standard Practice for Military Packaging. Shipping and storage markings shall be in accordance with MIL-STD-129, Standard Practice for Military Marking.

Shipping Container Marking
Shipping containers shall be marked meeting the following criteria: (a) MIL-STD-129, Standard Practice for Military Marking. (b) Additional marking and/or bar coding requirements exceeding those of MIL-STD-129 (e.g., unit serial numbers, original equipment manufacturers (OEM) name, or OEM model number, as specified on the AFMC Form 158.

ORGANIZATION / OFFICE SYMBOL:	PACKAGING SPECIALIST:	PHONE NUMBER:	SIGNATURE:	DATE:
406 SCMS / GULAA	Mallory, Aaron D	405-582-9768 / 852-9768	//SIGNED//Mallory, Aaron D	26064 - 05 MAR 2026

SPECIAL PACKAGING INSTRUCTION

CODE ID	SPI NO (TPO)
98748	F 00-784-9692
	SHEET 1 OF 5

PART OR DRAWING NO.	NATIONAL STOCK NO.	CURR REV
374455-3	1650-00-784-9692	B
ITEM NOMENCLATURE		ORIG DATE
BOOSTER ALERON		67342

ILL D. CHOI
PS G. VILLARMA
CHKR A. MALLORY
AUTH M. CONAUGHTY

U.S. AIR FORCE OKLAHOMA CITY ALC 8 APPROVED PACKAGING

PRESERVATION IAW MIL-STD-2073
SERVICEABLE METHOD: 53
UNSERVICEABLE METHOD: 10

QUP 001

ICQ N/A

CLEANING & DRYING IAW MIL-STD-2073

PRESERVATIVE N/A

MARKING IAW MIL-STD-129

SPECIAL MARKINGS:

A) SPI NO. F 00-784-9692
B) REUSABLE CONTAINER AND DUNNAGE DO NOT DESTROY.
C) NOT FOR OUTSIDE STORAGE.
D) CAUTION LIFT BY BASE ONLY. TO OPEN REMOVE BOTTOM LAG BOLTS

CLOSURE

LEVEL A: IAW ASTM-D 6256
LEVEL B: IAW ASTM-D 6256

PACKING AS SPECIFIED BELOW AND BILL OF MATERIALS

LEVEL	SPEC	TYPE	CL	STYLE	VRTY	GR	TR
A	ASTM-D 6256	II	2	A	N/A	N/A	N/A
B	ASTM-D 6256	I	1	A	N/A	N/A	N/A

	LEVEL A	LEVEL B
GROSS CU FT	16.0	16.0
GROSS WT LBS	162	162
DESIGN FRAGILITY G	N/A	N/A

CNTNR I.D.	LENGTH	WIDTH	DEPTH
LEVEL A:	53 1/4	22	15 1/2
LEVEL B:	53 1/4	22	15 1/2

CNTNR O.D.	LENGTH	WIDTH	DEPTH
LEVEL A:	55 1/4	24 1/2	20 1/2
LEVEL B:	55 1/4	24 1/2	20 1/2
ITEM DIM	47	13	18 1/2
ITEM WT LBS	50 LBS		

REVISIONS		
LTR	DESCRIPTION	DATE
A	REVISED & REDRAWN	00243
B	CORRECTED P/N (2) DIM. UPDATED SPECS. AND ADDED WOOD & DIST STMT.	20044

PART NO.	QTY.	NOMENCLATURE OR DESCRIPTION	SIZE (INCHES UNLESS SPECIFIED) TOLERANCES ON FRAC. ± 1/8, DECIMAL ± .10, ANGLES ± 1°	MATERIAL SPECIFICATION
6	4	CARRIAGE BOLT	1/4 DIA. X 4 W/NUT & WASHER	ASME B18.5, B18.2.2, B18.21.1
5	2	HEADERS	2 X 2 X 22	ASTM-D 6199
4	1	FLOOR	53 1/4 X 22 X 1/2	A-A-55057 4
3	2	SKID	2 X 4 X 55 1/4	ASTM-D 6199
2	6	RUBBING STRIP	2 X 4 X 10	ASTM-D 6199
1	1	CONTAINER I.D.	53 1/4 X 22 X 15 1/2	SEE LEVEL OF PACK

ALL WOODEN PALLETS AND WOOD CONTAINERS PRODUCED OF NON-MANUFACTURED WOOD SHALL BE CONSTRUCTED FROM HEAT TREATED (HT TO 56° C ,CORE TEMPERATURE, FOR 30 MIN.) MATERIAL AND CERTIFIED BY AN ACCREDITED AGENCY RECOGNIZED BY THE AMERICAN LUMBER STANDARDS COMMITTEE (ALSC) IN ACCORDANCE WITH NON-MANUFACTURED WOOD PACKING POLICY AND NON-MANUFACTURED WOOD PACKING ENFORCEMENT REGULATIONS BOTH DATED MAY 30, 2001.

DISTRIBUTION STATEMENT D: DISTRIBUTION AUTHORIZED TO DEPARTMENT OF DEFENSE AND U.S. DOD CONTRACTORS ONLY, ADMINISTRATIVE OR OPERATIONAL USE, 04 APRIL 2018, OTHER REQUESTS FOR THIS DOCUMENT SHALL BE REFERRED TO 406 SCMS/GULAA (PACKAGING DIVISION), TINKER AFB, OK 73145

SPECIAL PACKAGING INSTRUCTION	CODE ID 98748	SPI NO (TPO) F 00-784-9692
ITEM NOMENCLATURE BOOSTER ALERON		SHEET 2 OF 5

PART NO.	QTY.	NOMENCLATURE OR DESCRIPTION	SIZE (INCHES UNLESS SPECIFIED) TOLERANCES ON FRAC. ± 1/8, DECIMAL ± .10, ANGLES ± 1°.	MATERIAL SPECIFICATION
7	A/R	BAG	SIZE AS REQUIRED	MIL-PRF-131 4
8	A/R	BARRIER	SIZE AS REQUIRED	MIL-PRF-121 2 4
9	2	ANGLE	1 1/2 X 2 1/4 X .074 X 24	MIL-S-21041 SLOTTED STEEL
10	3	ANGLE	1 1/2 X 2 1/4 X .074 X 18	MIL-S-21041 SLOTTED STEEL
11	1	ANGLE	1 1/2 X 3 X .104 X 6	MIL-S-21041 SLOTTED STEEL
12	1	ANGLE	1 1/2 X 2 1/4 X .074 X 3	MIL-S-21041 SLOTTED STEEL
13	1	ANGLE	1 1/2 X 2 1/4 X .074 X 1 1/2	MIL-S-21041 SLOTTED STEEL
14	1	BLOCK	5/8 X 1 1/2 X 1 1/2	A-A-55057 2
15	1	MACHINE BOLT	3/8 DIA. X 4 W/WASHER & NUT	ASME B18.2.1, B18.2.2, B18.21.1 2
16	1	MACHINE BOLT	1/2 DIA. X 1 1/2 W/WASHER & NUT	ASME B18.2.1, B18.2.2, B18.21.1 2
17	1	MACHINE BOLT	3/8 DIA. X 1 1/2 W/WASHER & NUT	ASME B18.2.1, B18.2.2, B18.21.1 2
18	4	CARRIAGE BOLT	5/16 DIA. X 2 1/2 W/WASHER & NUT	ASME B18.5, B18.2.2, B18.21.1 4
19	A/R	CUSHION	SIZE AS REQUIRED	PPP-C-1797 4
20	48	DESICCANT	UNITS	MIL-D-3464 OR EQUAL

TABLE ONE	
NSN	PART NUMBER
1650-01-134-4415	374455-7

NOTES:

1) CAP & PLUG IAW NAS 847.
2) PLACE BARRIER (8) BETWEEN ITEM & BLOCK (14), SECURE TO MOUNTING FRAME W/BOLTS (15)(16) & (17).
3) CENTER MOUNT ITEM ON BASE TO ALLOW MAXIMUM CLEARANCE ON ALL SIDES AND DRILL 5/16 HOLES THROUGH (FRAME) BASE & SKIDS, FOUR PLACES.
4) PLACE BAG (7) & BARRIER (8) BETWEEN FLOOR & MOUNTING FRAME. PAD ALL SHARP EDGES & CORNERS W/CUSHION (19) & SECURE TO BASE W/BOLTS.
5) SLOTTED ANGLE, IT MAY BE REQUIRED TO REAM HOLES TO ACCOMMODATE BOLTS (15)(16) & (17).

SPECIAL PACKAGING INSTRUCTION	CODE ID 98748	SPI NO (TPO) F 00-784-9692
ITEM NOMENCLATURE BOOSTER ALERON		SHEET 3 OF 5

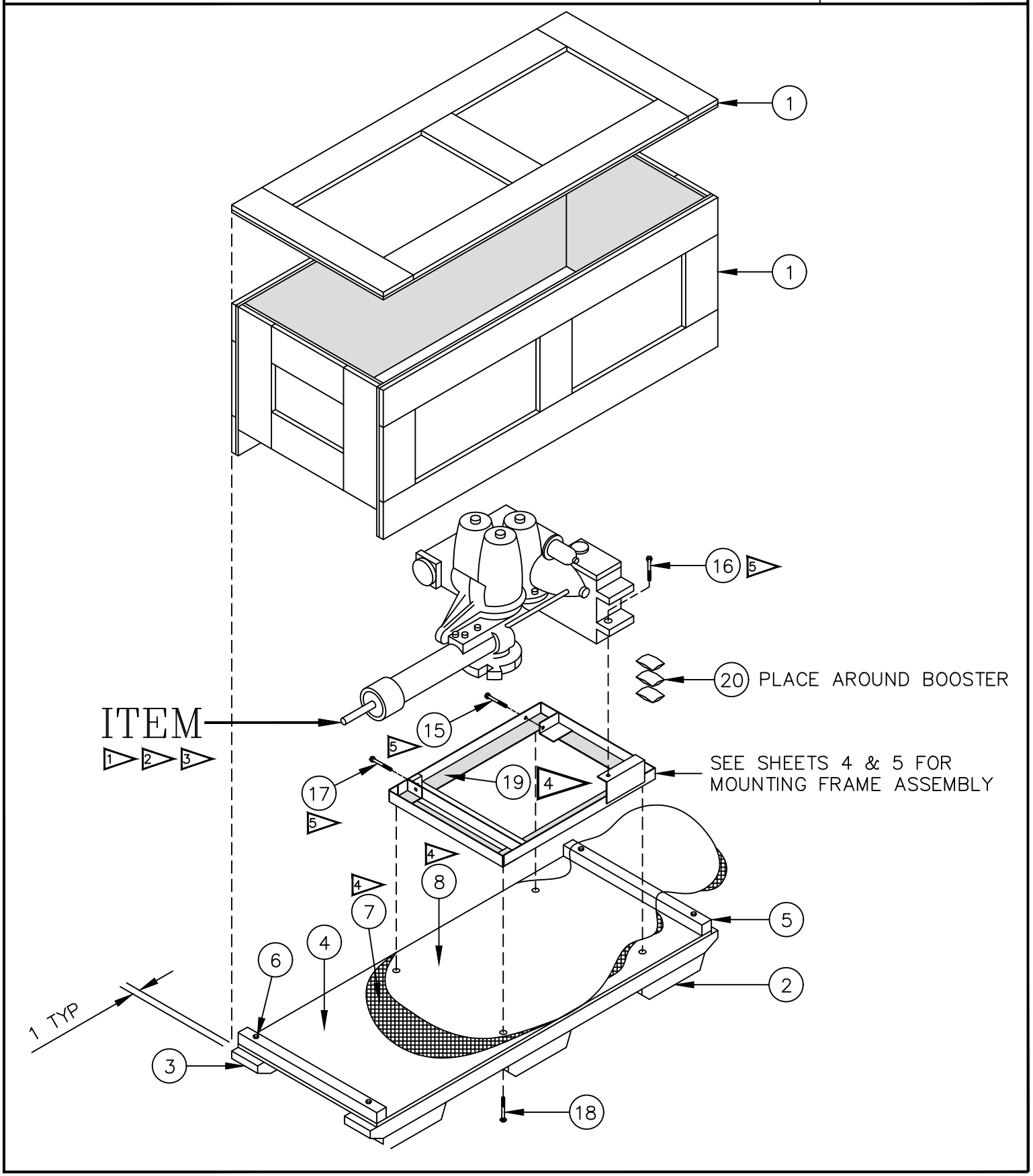

SPECIAL PACKAGING INSTRUCTION	CODE ID 98748	SPI NO (TPO) F 00-784-9692
ITEM NOMENCLATURE BOOSTER ALERON		SHEET 4 OF 5

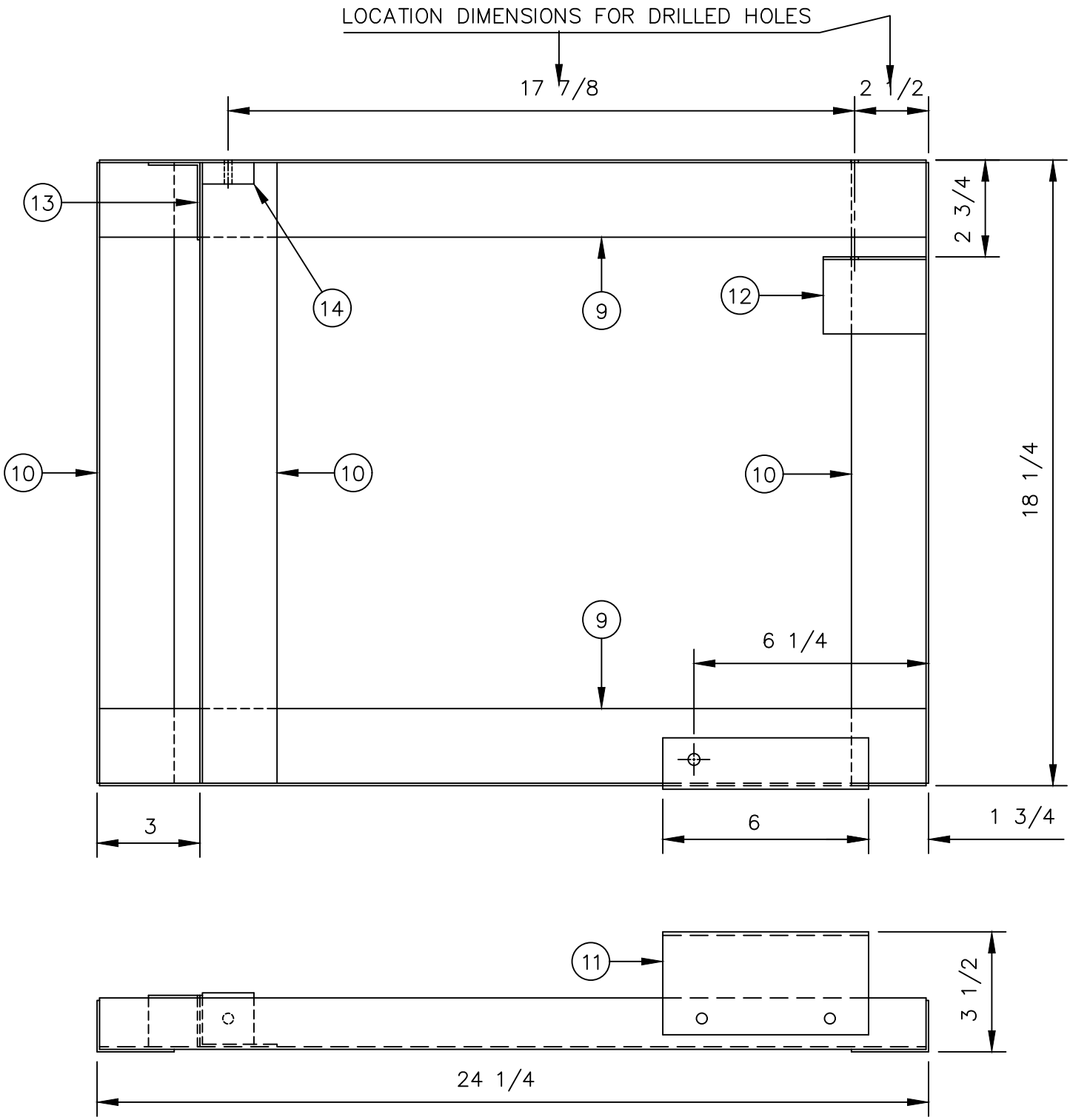

MOUNTING FRAME ASSEMBLY

SPECIAL PACKAGING INSTRUCTION	CODE ID 98748	SPI NO (TPO) F 00-784-9692
ITEM NOMENCLATURE BOOSTER ALERON		SHEET 5 OF 5

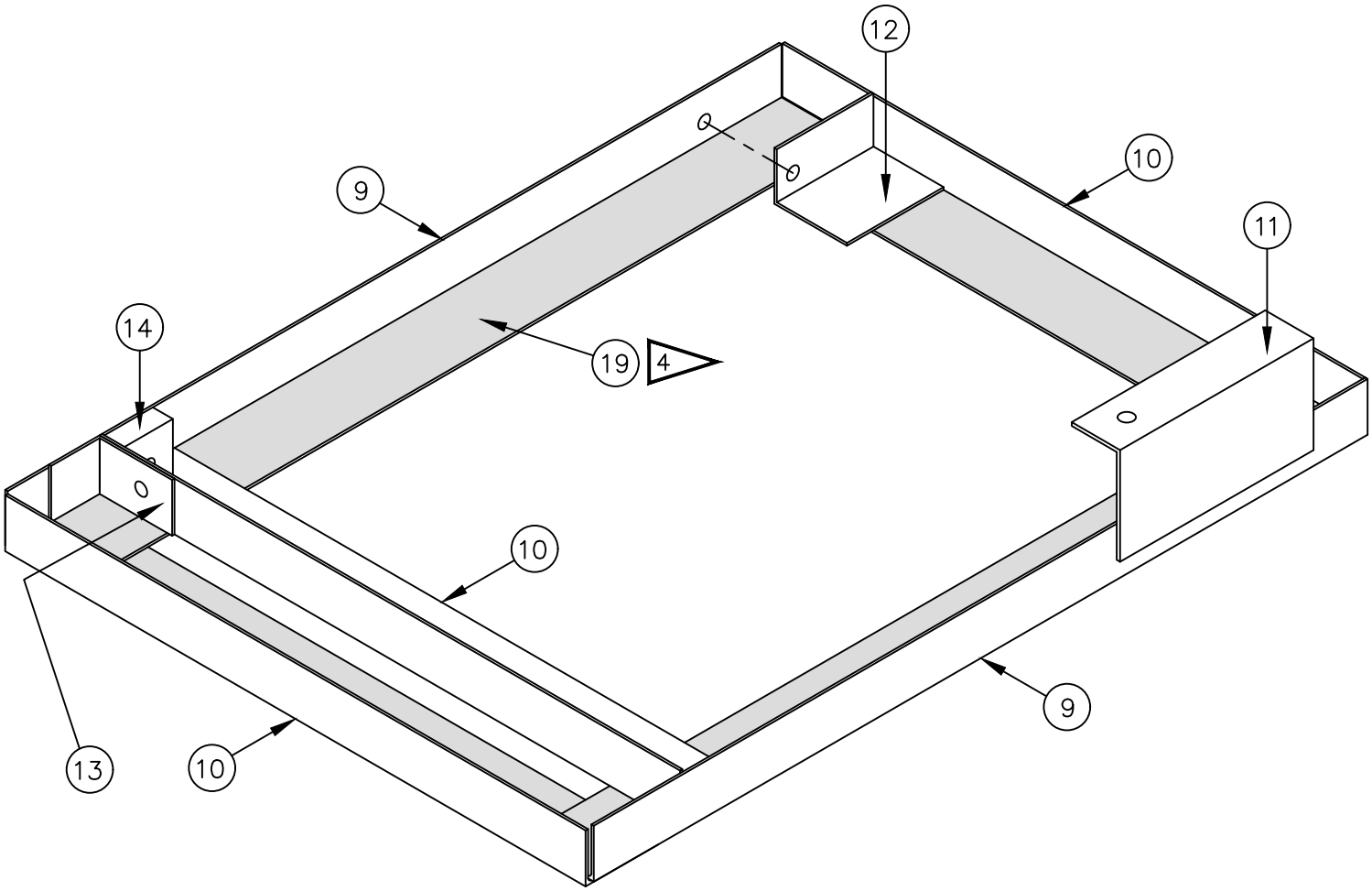

MOUNTING FRAME ASSEMBLY