NORTH CAROLINA AIR NATIONAL GUARD
145TH FIGHTER WING

ANG PROJECT NUMBER: FJRP229030
AECOM PROJECT NUMBER: 60637899

NEW SECURITY FORCES BUILDING

CHARLOTTE, NC

B-3 SUBMITTAL - FINAL

30 MAY 2025

Optional Line Item (OLI):

#1 - Pedestrian Bridge
#2 - Folding Partition in the Training Rooms
#3 - Millwork Lockers

AECOM

PROJECT
NEW SECURITY FORCES BUILDING
PAYNE BLVD.
CHARLOTTE, NORTH CAROLINA 28208

CLIENT
NORTH CAROLINA AIR NATIONAL GUARD - 145TH AIRLIFT WING
145th AIRLIFT WING
4930 MINUTEMAN WAY
CHARLOTTE, NORTH CAROLINA 28208

ARCHITECT/DESIGNER
AECOM
277 W NATIONWIDE BLVD
COLUMBUS, OH 43215
614-464-4500

http://www.aecom.com

CONSULTANTS

REGISTRATION

STATE OF OHIO
MARTY SEESE
1817301
REGISTERED ARCHITECT
5/30/2025

KEY PLAN

ISSUE/REVISION

I/R	DATE	DESCRIPTION
	5/30/2025	B-3 SUBMITTAL - FINAL

PROJECT NUMBER
60637899
FJRP229030

SHEET TITLE
COVER SHEET

SHEET NUMBER
G000

The drawing has been prepared for the use of AECOM's client and may not be used, reproduced or relied upon by third parties, except as agreed by AECOM and its client, as required by law or use by governmental reviewing agencies. AECOM accepts no responsibility, and denies any liability whatsoever, to any party that modifies this drawing without AECOM's express written consent. Do not scale this document. All measurements must be obtained from the stated dimensions.

©2023 AECOM Corporation

Project Management Initials: MR Designer: SW Checked: YH Approved: MS ARCH E1 30"x42"

Last Plotted: 5/23/2025 12:13:33 PM
Filename: BM 360-BP-ABER (USA) 60637899-SFNCANG145R637899_SF-NC ANG_R21_A.rvt

Printed on ___% Post-Consumer Recycled Content Paper

ABBREVIATIONS

AAF	ABOVE ACCESS FLOOR
ABUT	ABUTMENT
ACST	ACOUSTICAL
ACT	ACOUSTICAL CEILING TILE
ADA	AMERICANS WITH DISABILITIES ACT
ADJ	ADJACENT
ADJT	ADJUST (ADJUSTABLE)
AF	ACCESS FLOOR
AFF	ABOVE FINISH FLOOR
AHU	AIR HANDLING UNIT
ALT	ALTERNATE
ALUM	ALUMINUM
ANOD	ANODIZE (ANODIZED)
ANSI	AMERICAN NATIONAL STANDARDS INSTITUTE
AP	ACCESS PANEL
APPROX	APPROXIMATE
ARCH	ARCHITECTURAL
ASTM	AMERICAN SOCIETY FOR TESTING AND MATERIALS
ATTEN	ATTENUATION
AUX	AUXILIARY
AWP	ACOUSTICAL WALL PANEL
B/	BOTTOM OF
BD	BOARD
BF	BOTH FACES
BLDG	BUILDING
BLK	BLOCK
BLKG	BLOCKING
BOD	BASIS OF DESIGN
BOT	BOTTOM
BRDG	BRIDGING
BRG	BEARING
BRKT	BRACKET
BSMT	BASEMENT
BTWN / B/N	BETWEEN
C/C	CENTER TO CENTER
CAB	CABINET
CERT	CERTIFIED
CFCI	CONTRACTOR FURNISHED CONTRACTOR INSTALLED
CFOI	CONTRACTOR FURNISHED OWNER INSTALLED
CG	CORNER GUARD
CIP	CAST IN PLACE
CJ	CONTROL JOINT
CL	CENTERLINE
CLG	CEILING
CLR	CLEAR
CM	CENTIMETER
CMU	CONCRETE MASONRY UNIT
CNTR	COUNTER
CO	CLEAN OUT
COL	COLUMN
COMPR	COMPRESSIBLE
CONC	CONCRETE
CONN	CONNECTOR
CONST	CONSTRUCTION
CONT	CONTINUOUS
CONTR	CONTRACTOR
COORD	COORDINATE
CORR	CORRIDOR
CPT	CARPET TILE
CR	CARD READER
CSK	COUNTERSINK
CSWK	CASEWORK
CT	CERAMIC TILE
CTR	CENTER
CW	CURTAINWALL
DAT	DATUM
DB	DOOR BASE CABINET
DBL	DOUBLE
DD	DOOR/DRAWER BASE CABINET
DEG	DEGREE
DEMO	DEMOLITION
DET	DETAIL
DFB	DRAWER/FILE BASE CABINET
DIA	DIAMETER
DIAG	DIAGONAL
DIFF	DIFFUSER
DIM	DIMENSION
DISPEN	DISPENSER
DKG	DECKING
DL	DEAD LOAD
DN	DOWN
DO	DOOR/OPEN BASE CABINET
DR	DOOR
DS	DOWN SPOUT
DW	DISHWASHER
DWG	DRAWING
DWR	DRAWER
E	EAST
EA	EACH
EF	EACH FACE
EHD	ELECTRIC HAND DRYER
EIFS	EXTERIOR INSULATION FINISH SYSTEM
EJ	EXPANSION JOINT
EL	ELEVATION
ELEC	ELECTRICAL
ELEV	ELEVATOR
ENCL	ENCLOSURE
ENG	ENGINEER
EOD	EDGE OF DECK
EOS	EDGE OF SLAB
EPT	EPOXY PAINT
EQ	EQUAL
EQUIP	EQUIPMENT
ES	EACH SIDE
EW	EACH WAY
EWC	ELECTRIC WATER COOLER
EXG	EXISTING
EXP	EXPOSED
EXP STR	EXPOSED TO STRUCTURE
EXT	EXTERIOR
F	FILLER PIECE (3/4" MIN - 2 1/2" MAX)
F/	FACE OF
F/F	FACE TO FACE
F/M	FACE OF MULLION
FACT	FACTORY
FD	FLOOR DRAIN
FDC	FIRE DEPARTMENT CONNECTION
FE	FIRE EXTINGUISHER
FEC	FIRE EXTINGUISHER CABINET
FF	FINISH FACE
FIN	FINISH
FIXT	FIXTURE
FL	FLOOR
FLUOR	FLUORESCENT
FNDN	FOUNDATION
FRP	FIBERGLASS REINFORCED PLASTIC
FRT	FIRE RESISTANT TREATED
FT	FEET / FOOT
FTG	FOOTING
FURN	FURNITURE
FUT	FUTURE

ABBREVIATIONS

GA	GAUGE
GAL	GALLON
GALV	GALVANIZED
GB	GRAB BAR
GEN	GENERAL
GFCI	GOVERNMENT FURNISHED CONTRACTOR INSTALLED
GFGI	GOVERNMENT FURNISHED GOVERNMENT INSTALLED
GLAZ	GLAZING
GYP	GYPSUM
GYP BD	GYPSUM BOARD
HDR	HEADER
HDW	HARDWARE
HM	HOLLOW METAL
HORIZ	HORIZONTAL
HP	HIGH POINT
HPL	HIGH PRESSURE LAMINATE
HR	HOUR
HT	HEIGHT
HVAC	HEATING-VENTILATING-AIR CONDITIONING
ID	INSIDE DIAMETER
IN	INCH(ES)
INCL	INCLUDE(ED)(ING)
INSUL	INSULATED
INT	INTERIOR
JAN	JANITOR
JST	JOIST
JT	JOINT
KO	KNOCKOUT
LAM	LAMINATE(D)
LAV	LAVATORY
LB	POUND
LEVPL	LEVELING PLATE
LF	LINEAR FOOT (FEET)
LKR	LOCKER
LL	LIVE LOAD
LOC	LOCATION
LONG	LONGITUDINAL
LP	LOW POINT
LTG	LIGHTING
LVL	LEVEL
LVR	LOUVER
M	METER (METRIC MEASURE)
MAS	MASONRY
MATL	MATERIAL
MAX	MAXIMUM
MB	MARKER BOARD
MC	MICROWAVE CABINET
MDF	MEDIUM DENSITY FIBERBOARD
MECH	MECHANICAL
MEZZ	MEZZANINE
MF	MOBILE DRAWER/FILE CABINET
MFR	MANUFACTURER
MHO	MAGNETIC HOLD OPEN
MID	MIDDLE
MIN	MINIMUM
MISC	MISCELLANEOUS
MM	MILLIMETER
MO	MASONRY OPENING
MRT	MOISTURE/MILDEW RESISTANT TREATED
MTL	METAL
MTR	METER (UTILITIES)
N	NORTH
N/A	NOT APPLICABLE
NIC	NOT IN CONTRACT
NOM	NOMINAL
NTS	NOT TO SCALE
O/O	OUT TO OUT
OC	ON CENTER
OD	OUTSIDE DIAMETER
OFC	OPEN FACE CABINET
OFD	OVERFLOW DRAIN
OHC	OVERHEAD COILING DOOR
OHD	OVERHEAD
OHS	OPEN CABINET W/ HORIZONTAL SLOTS
OPNG	OPENING
OPP	OPPOSITE
OSC	OPEN SINK CABINET
OVS	OPEN CABINET W/ VERTICAL SLOTS
P/L	PROPERTY LINE
PC	PRECAST CONCRETE
PCF	POUNDS PER CUBIC FOOT
PERIM	PERIMETER
PL	PLATE
PLAM	PLASTIC LAMINATE
PLAS	PLASTIC
PLMB	PLUMBING
PLSTR	PLASTER
PLY	PLYWOOD
PNL	PANEL
POL	POLISHED
PREFAB	PREFABRICATED
PREFIN	PREFINISHED
PROJ	PROJECTION
PROP	PROPERTY
PRTBD	PARTICAL BOARD
PSF	POUNDS PER SQUARE FOOT
PSI	POUNDS PER SQUARE INCH
PT	POINT
PTN	PARTITION (WALL)
PVC	POLYVINYL CHLORIDE
PYC	POLYURETHANE COATING
QT	QUARRY TILE
QTY	QUANTITY
R	RISER
RAD	RADIUS
RB	RUBBER BASE
RCP	REFLECTED CEILING PLAN
RD	ROOF DRAIN
REBAR	REINFORCING BAR
RECT	RECTANGULAR
REF	REFERENCE
REINF	REINFORCE(ING)
REQ	REQUIRE(D)
RESIN	RESINOUS
REV	REVISE (REVISION)
RM	ROOM
RND	ROUND
RO	ROUGH OPENING

ABBREVIATIONS

S	SOUTH
SB	SCUPPER BOX
SBC	SINK BASE CABINET
SC	SEALED CONCRETE
SCHED	SCHEDULE
SD	SOAP DISPENSER
SDC	SLIDING DOOR CABINET
SECT	SECTION
SF	SQUARE FOOT (FEET)
SHT	SHEET
SI	SQUARE INCH(ES)
SIM	SIMILAR
SLD	SOLID SURFACE
SLV	SLEEVE
SOG	SLAB ON GRADE
SPEC	SPECIFICATION(S)
SPKR	SPEAKER
SQ	SQUARE
SS/EE	SAFETY SHOWER / EMERGENCY EYEWASH
ST STL	STAINLESS STEEL
STD	STANDARD
STIFF	STIFFEN(ER)
STL	STEEL
STOR	STORAGE
STRUCT	STRUCTURE(AL)
SUSP	SUSPENDED
SYM	SYMMETRICAL
T	TREAD
T&B	TOP AND BOTTOM
T&G	TONGUE AND GROOVE
T/	TOP OF
T/M	TOP OF MULLION
TBD	TO BE DETERMINED
TEMP	TEMPERATURE
TERM	TERMINATION
TLT	TOILET
TPO	THERMPLASTIC POLYOLEFIN
TPTN	TOILET PARTITION
TV	TELEVISION
TYP	TYPICAL
UL	UNDERWRITERS LABORATORY
UON	UNLESS OTHERWISE NOTED
VCT	VINYL COMPOSITE TILE
VERT	VERTICAL
VIF	VERIFY IN FIELD
VNR	VENEER
VPR	VAPOR
W	WEST
W/	WITH
W/O	WITHOUT
WC	WATER CLOSET
WD	WOOD
WL	WIND LOAD
WP	WALL PROTECTION
WWF	WELDED WIRE FABRIC
WWM	WELDED WIRE MESH
YD	YARD
YR	YEAR

PROJECT LOCATION

SYMBOLOGY LEGEND

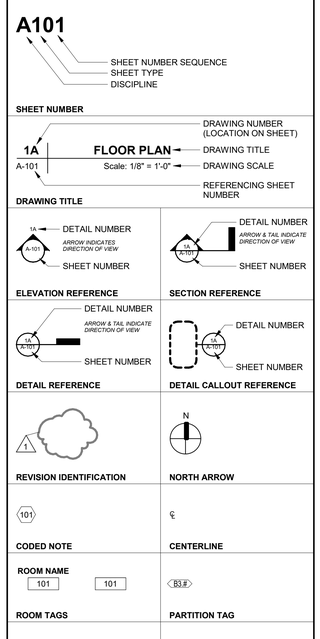

DRAWING INDEX

NUMBER	NAME
GENERAL	
G000	COVER SHEET
G001	ABBREVIATIONS, LEGENDS, & SHEET INDEX
G002	CODE INFORMATION
G101	LIFE-SAFETY PLANS
CIVIL	
C001	DEMOLITION PLAN
C002	EROSION CONTROL PLAN
C003	SESC DETAILS
C101	SITE LAYOUT PLAN
C102	LANDSCAPE PLAN
C201	UTILITY PLAN
C301	GRADING AND DRAINAGE PLAN
C501	DETAILS
C502	DETAILS
STRUCTURE	
S001	ABBREVIATIONS, LEGENDS, & SYMBOLS
S002	GENERAL NOTES
S003	GENERAL NOTES
S007	TYPICAL DETAILS
S008	TYPICAL DETAILS
S009	TYPICAL DETAILS
S010	TYPICAL DETAILS
S011	TYPICAL DETAILS
S101	STRUCTURAL FOUNDATION PLAN
S102	STRUCTURAL SECOND FLOOR FRAMING PLAN
S103	STRUCTURAL ROOF FRAMING PLAN
S200	STRUCTURAL ELEVATIONS
S201	STRUCTURAL ELEVATIONS
S300	STRUCTURAL DETAILS
S301	STRUCTURAL DETAILS
S302	STRUCTURAL DETAILS
S303	STRUCTURAL DETAILS
S304	STRUCTURAL DETAILS
S305	STRUCTURAL DETAILS
ARCHITECTURE	
A101	FLOOR PLAN - LEVEL 1
A102	FLOOR PLAN - LEVEL 2
A103	ROOF PLAN
A150	REFLECTED CEILING PLAN - LEVEL 1
A151	REFLECTED CEILING PLAN - LEVEL 2
A200	EXTERIOR PERSPECTIVES
A201	EXTERIOR ELEVATIONS
A220	ENLARGED EXTERIOR ELEVATIONS
A240	CURTAINWALL / WINDOW ELEVATIONS
A300	BUILDING SECTIONS
A320	WALL SECTIONS
A321	WALL SECTIONS
A400	ENLARGED FLOOR PLANS
A420	ENLARGED REFLECTED CEILING PLANS
A500	EXTERIOR PLAN DETAILS
A501	EXTERIOR PLAN DETAILS
A502	EXTERIOR PLAN DETAILS
A520	EXTERIOR SECTION DETAILS
A521	EXTERIOR SECTION DETAILS
A530	ROOF DETAILS
A600	TYPICAL MOUNTING HEIGHTS
A601	INTERIOR ELEVATIONS
A602	INTERIOR ELEVATIONS
A610	SIGNAGE
A611	SIGNAGE
A630	INTERIOR CEILING DETAILS
A640	INTERIOR MILLWORK ELEVATIONS AND DETAILS
A670	PARTITION TYPE SCHEDULE, NOTES AND DETAILS
A680	DOOR SCHEDULE
A700	ENLARGED STAIR PLANS AND SECTIONS - STAIR 01
A701	ENLARGED ELEVATOR PLANS WALL SECTIONS - ELEV 01
A702	TYPICAL STAIR DETAILS
A800	FINISH LEGENDS AND SCHEDULES
A900	OLI #1 - PEDESTRIAN BRIDGE

DRAWING INDEX

NUMBER	NAME
FIRE PROTECTION	
FA001	FIRE ALARM SYMBOLS, LEGEND, ABBREVIATIONS AND NOTES
FA101	FIRST FLOOR PLAN - FIRE ALARM
FA201	SECOND FLOOR PLAN - FIRE ALARM
FA501	FIRE ALARM DETAILS
FA502	FIRE ALARM DETAILS
FA503	FIRE ALARM DETAILS
FX001	FIRE SUPPRESSION SYMBOLS, LEGEND, ABBREVIATIONS AND NOTES
FX101	FIRST FLOOR PLAN - FIRE SUPPRESSION
FX201	SECOND FLOOR PLAN - FIRE SUPPRESSION
FX501	FIRE SUPPRESSION DETAILS
FX801	FIRE EXTINGUISHER LAYOUT
PLUMBING	
P001	GENERAL INFO - PLUMBING
P100	UNDERGROUND PLUMBING PLAN
P101	FIRST FLOOR PLUMBING PLAN
P102	SECOND FLOOR PLUMBING PLAN
P103	ROOF PLUMBING PLAN
P301	PLUMBING ENLARGED PLANS
P601	PLUMBING DETAILS
P602	PLUMBING DETAILS
P701	PLUMBING SCHEDULES
P801	PLUMBING STACK DIAGRAM
P802	DOMESTIC RISER DIAGRAM
MECHANICAL	
M001	GENERAL INFORMATION - HVAC
M002	HVAC ZONING PLANS
M101	FIRST FLOOR HVAC DUCTWORK PLAN
M102	SECOND FLOOR HVAC DUCTWORK PLAN
M401	HVAC SECTIONS
M601	HVAC DETAILS
M602	HVAC DETAILS
M701	HVAC SCHEDULES
M801	HVAC SEQUENCE OF OPERATIONS
M802	HVAC SEQUENCE OF OPERATIONS
ELECTRICAL	
E001	ABBREVIATIONS, LEGENDS & GENERAL NOTES - ELECTRICAL
E090	GROUNDING AND LIGHTNING PROTECTION PLANS
E100	ELECTRICAL SITE PLAN
E101	POWER PLAN - LEVEL 1
E102	POWER PLAN - LEVEL 2
E201	LIGHTING PLAN - LEVEL 1
E202	LIGHTING PLAN - LEVEL 2
E203	PHOTOMETRIC CALCULATIONS
E501	ELECTRICAL DETAILS
E502	ELECTRICAL DETAILS
E503	ELECTRICAL DETAILS
E601	ELECTRICAL ONE-LINE DIAGRAM
E701	ELECTRICAL SCHEDULES
E702	ELECTRICAL PANEL SCHEDULES
TELECOM	
T001	TELECOMMUNICATIONS LEGEND. ABBREVIATIONS AND SYMBOLS
T101	TELECOMMUNICATIONS FIRST FLOOR PLAN
T102	TELECOMMUNICATIONS SECOND FLOOR PLAN
T201	TELECOMMUNICATIONS SITE PLAN
T301	ENLARGED COMMUNICATIONS ROOM FLOOR PLAN
T501	TELECOMMUNICATIONS DETAILS
T502	TELECOMMUNICATIONS DETAILS
T601	TECHNOLOGY RISER DIAGRAMS

GENERAL NOTES

1. THE CONSTRUCTION DRAWINGS ILLUSTRATE THE DESIGN INTENT OF THE WORK. THEY INDICATE LOCATION, DIMENSIONS AND TYPICAL DETAILS. THE ARCHITECTURAL DRAWINGS ARE PART OF A LARGER SET OF DRAWINGS WHICH, WHEN COMPLETE, CONSIST OF ALL DRAWINGS LISTED BY THE INDEX OF DRAWINGS AND THE PROJECT SPECIFICATIONS. CONSEQUENTLY, THE WORK DESCRIBED BY THE DRAWINGS OF ANY ONE DISCIPLINE MAY AFFECT THE WORK DESCRIBED ON THE DRAWINGS OF ANOTHER DISCIPLINE, AND MAY REQUIRE REFERENCE TO THE DRAWINGS OF ANOTHER DISCIPLINE. THEREFORE, PARTIAL SETS OF DRAWINGS ARE INCOMPLETE AND SHALL NOT BE DISTRIBUTED OR UTILIZED BY ANYONE.
2. ALL WORK SHALL CONFORM TO THE REQUIREMENTS OF ALL APPLICABLE STATE AND/OR LOCAL CODES, LAWS, AMENDMENTS, ORDINANCES, INCLUDING ALL CODES LISTED IN THE APPLICABLE CODES SECTION.
3. DO NOT SCALE DRAWINGS.
4. FIELD VERIFY ALL DIMENSIONS PRIOR TO START OF WORK.
5. CONTACT THE ARCHITECT FOR DETERMINING A REQUIRED DIMENSION THAT CANNOT BE OBTAINED BASED ON DRAWING INFORMATION, BEFORE PROCEEDING WITH THE WORK.
6. WHERE DISCREPANCIES OCCUR BETWEEN FLOOR PLANS, DETAILS, AND LARGE SCALE PLANS, OR WHERE DISCREPANCIES OCCUR BETWEEN ARCHITECTURAL DRAWINGS AND ENGINEERING DRAWINGS, CONTACT THE ARCHITECT FOR CLARIFICATION BEFORE PROCEEDING WITH THE WORK.
7. CONSTUCTION JOINTS ARE LOCATED AT THE EXTERIOR STAIR AND BRIDGE. SEE DRAWINGS FOR MORE INFORMATION.
8. THE CONTRACTOR SHALL INSTALL OWNER FURNISHED EQUIPMENT IDENTIFIED AS "GFCI" IN THE EQUIPMENT SCHEDULES.
9. THE OWNER IS INSTALLING OWNER FURNISHED EQUIPMENT IDENTIFIED AS "GFGI" IN THE EQUIPMENT SCHEDULES.
10. THE CONTRACTOR SHALL FURNISH AND INSTALL EQUIPMENT IDENTIFIED AS "CFCI" IN THE EQUIPMENT SCHEDULES.
11. REFERENCE THE DRAWING SERIES LEGEND FOR INFORMATION CONTAINED IN EACH ARCHITECTURAL DRAWING SERIES.
12. THE RELATIVE DESIGN REFERENCE ELEVATION OF +0'-0", AS INDICATED ON THE DRAWINGS, CORRESPONDS TO THE FINISH FLOOR ELEVATION OF THE FLOOR IN QUESTION.

AECOM

PROJECT

NEW SECURITY FORCES BUILDING

PAYNE BLVD.
CHARLOTTE, NORTH CAROLINA 28208

CLIENT

NORTH CAROLINA AIR NATIONAL GUARD - 145TH AIRLIFT WING

145th AIRLIFT WING
4930 MINUTEMAN WAY
CHARLOTTE, NORTH CAROLINA 28208

ARCHITECT/DESIGNER

AECOM

277 W NATIONWIDE BLVD
COLUMBUS, OH 43215
614-464-4500

http://www.aecom.com

CONSULTANTS

REGISTRATION

KEY PLAN

ISSUE/REVISION

I/R	DATE	DESCRIPTION
	5/30/2025	B-3 SUBMITTAL - FINAL

PROJECT NUMBER

60637899
FJRP229030

SHEET TITLE

ABBREVIATIONS, LEGENDS, & SHEET INDEX

SHEET NUMBER

G001

This drawing has been prepared for the use of AECOM's client and may not be used, reproduced or relied upon by third parties, except as agreed by AECOM and its client, as required by law or for use by governmental reviewing agencies. AECOM accepts no responsibility, and denies any liability whatsoever to any party that modifies this drawing without AECOM's express written consent. Do not scale this document. All measurements must be obtained from the stated dimensions.

Project Management Initials: MR Designer: Designer Checked: Checker Approved: Approver/ARCH E1 30"x42"
Last Plotted: 5/23/2025 12:13:32 PM
Filename: BIM 360://SP-AABER-USA/ 60637899-SFNCANG/145060637899_SF-NC ANG_R21_A.rvt

Printed on ___% Post-Consumer Recycled Content Paper
©2023 AECOM Corporation

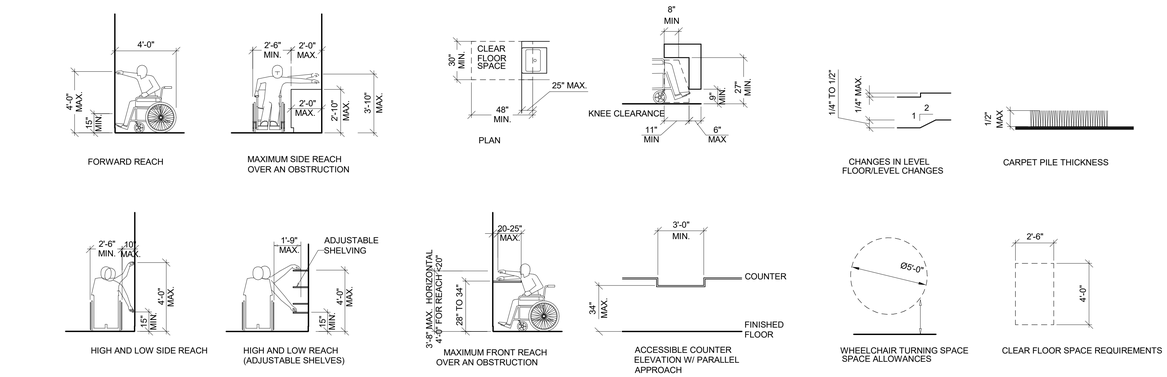

4 **ABA REACH CLEARANCES**

Scale: 1/4" = 1'-0"

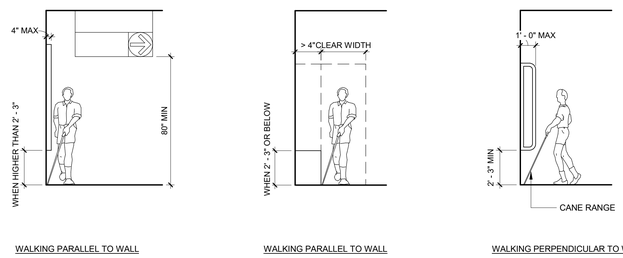

3 **ABA WALKING CLEARANCES**

Scale: 1/4" = 1'-0"

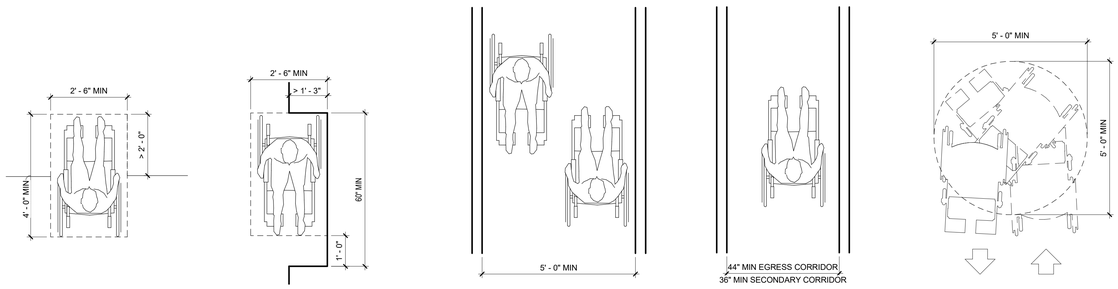

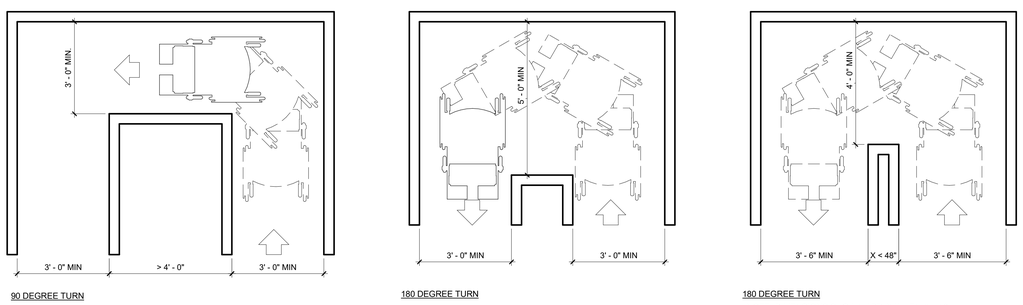

2 **ABA WHEELCHAIR CLEARANCES**

Scale: 1/2" = 1'-0"

1	**Department of Defense – Unified Facilities Criteria (UFC) that directly relate to the project.**	
	a.	UFC 1-200-01 DoD Building Code, with Change 3, 26 February 2024
	b.	UFC 1-200-02 High Performance and Sustainable Building Requirements, with Change 2, 01 June 2022
	c.	UFC 3-101-01 Architecture, with Change 4, 08 January 2024
	d.	UFC 3-110-03 Roofing, with Change 5, 12 June 2020
	e.	UFC 3-120-01 Design: Sign Standards, with Change 4, 1 February 2023
	f.	UFC 3-120-10 Interior Design, with Change 2, 15 June 2021
	g.	UFC 3-490-06 Elevators, with change 1, 13 January 2021
	h.	UFC 3-301-01 Structural Engineering, 11 April 2023
	i.	UFC 3-400-02 Engineering Weather Data, 20 September 2018
	j.	UFC 3-401-01 Mechanical Engineering, with Change 1, 01 October 2015
	k.	UFC 3-410-01 Heating, Ventilating, and Air Conditioning Systems, with Change 8 , 21 July 2021
	l.	UFC 3-410-02 Direct Digital Control for HVAC and Other Building Control Systems, with Change 2, 12 April 2021
	m.	UFC 3-420-01 Plumbing Systems, 01 April 2021
	n.	UFC 3-470-01 Utility Monitoring and Control Systems, 12 January 2018
	o.	UFC 3-490-06 Elevators, with Change 1, 13 January 2021
	p.	UFC 3-501-01 Electrical Engineering, with Change 1, 01 November 2019
	q.	UFC 3-520-01 Interior Electrical Systems, with Change 2, 12 April 2021
	r.	UFC 3-530-01 Interior and Exterior Lighting Systems, 09 February 2023
	s.	UFC 3-550-01 Exterior Electrical Power Distribution, with Change 3, 01 November 2019
	t.	UFC 3-575-01 Lightning and Static Electricity Protection Systems, 01 October 2021
	u.	UFC 3-580-01 Telecommunications Building Cabling Systems Planning and Design, with Change 1, 01 June 2016
	v.	UFC 3-600-01 Fire Protection Engineering for Facilities, with Change 6, 06 May 2021
	w.	UFC 4-010-01 DoD Minimum Antiterrorism Standards for Buildings, with Change 2, 30 July 2022
	x.	UFC 4-021-01 Design and O&M: Mass Notification Systems, with Change 1, January 2010
	y.	In addition to the "Core UFC" requirements, comply with other UFC requirements as applicable to the system, structure, or facility type defined in the scope of the construction project
2	**International Codes**	
	a.	International Building Code (IBC) – 2021 Edition
	b.	International Mechanical Code (IMC) – 2021 Edition
	c.	International Plumbing Code (IPC) – 2021 Edition
3	**National Fire Protection Association – National Fire Codes**	
	a.	NFPA 1 , Fire Code, 2021 Edition
	b.	NFPA 10, Standard for Portable Fire Extinguishers, 2022 Edition
	c.	NFPA 13, Standard for the Installation of Sprinkler Systems, 2022 Edition
	d.	NFPA 24, Standard for the Installation of Private services Mains and Their Appurtenances, 2022 Edition
	e.	NFPA 70, National Electric Code, 2020 Edition
	f.	NFPA 72, National Fire Alarm and Signaling Code, 2022 Edition
	g.	NFPA 101, Life Safety Code, 2021 Edition
	h.	NFPA 220, Standard on Types of Building Construction, 2021 Edition
4	**Architectural Barriers Act (ABA) Accessibility Standard for Department of Defense Facilities , 2015**	

NC ANG 145 NEW SECURITY FORCES BUILDING CHARLOTTE, NC

Code Item	Code Reference	Code Requirement
Use Group	IBC Section 304 (Non Separated Mixed Use)	B, Business S-1, Moderate Hazard Storage
	NFPA 101	Chapter 38, New Business Occupancies Chapter 42, Storage Occupancies (Ordinary Hazard)
Classification		
Type of Construction	IBC Table 601 & 705.5 NFPA 220 Table 4.1.1	IIB Noncombustible Type II (000)
Allowable Height and Number of Stories	IBC Section 504 IBC Table 504.3 & 504.4	4 stories, 75 feet
Allowable Area	IBC Section 506, 508.3.2 IBC Table 506.2	Building Type = 5M 52,500SF/Floor (Non-Separated Mixed Use most stringent applies: based on S-1)
Actual Height and Area		**2 stories, 32'-4" / 9,530 GSF**
Fire Ratings		
Fire Rating of Exterior Walls	IBC Table 705.5 NFPA 220, Table 4.1.1	0-HR / Non Bearing
Fire Rating of Exterior Walls	IBC Table 601	0-HR / Bearing
Primary Structural Frame	IBC Table 601	0-HR
Bearing Walls – Exterior	IBC Table 601	0-HR
Bearing Wall – Interior	IBC Table 601	0-HR
Non Bearing – Exterior	IBC Table 705	0-HR > 30'
Non Bearing – Interior	IBC Table 601	0-HR
Floor Construction	IBC Table 601	0-HR
Roof Construction	IBC Table 601	0-HR
Fire Separation Distance	IBC Table 705	0-HR > 30'
Occupancy Separation	IBC Section 508.3 IBC Table 508.4	Non- Separated Occupancies-B/S-1 No Separation Requirement
Vertical Separation of Openings in Exterior Wall	IBC Section 705.8.5 NFPA	Not required w/ automatic sprinkler system N/A
Occupant Load	NFPA 101 Table 7.3.1.2 UFC 3-600-1, Table 10-1	Occupant Load Factors by use Supplemental Occupant Load Factors
Fire Protection Systems (A.S.S.)	UFC 3-600-1, Section 9-7.2.1.2	Required
Fire Alarm - Detection System	IBC Section 907 UFC 3-600-1, Section 9-18 NFPA 38.3.4.1	Required
Corridor Fire Resistance Rating	NFPA 101, 38.3.6.1	Exception 3: 0-HR w/A.S.S.
Dead End Corridor	NFPA 101, 38.2.5.2.1	50 FT w/A.S.S.
Minimum Number of Means of egress from a room or area	NFPA 101, 38.2.4	1-500 Occupants-2 exits required (With exceptions for special conditions) 1 in low hazard storage occupancies.
Minimum Corridor Width	NFPA 101, 38.2.3.2	44 inches if serving occ. load > 50
Max. Exit Access Travel Distance	NFPA 101, 38.2.6.3 IBC Table 1017.2	300 FT w/A.S.S.
Common Path of Travel	NFPA 101, 38.2.5.3.1	100 FT w/A.S.S.
Min. Ceiling Height Means of Egress	NFPA 101, 7.1.5	7'-6" min.
Protection of Exits	NFPA 101, 7.1.3.2.1	1-HR rated enclosure < 4 stories
Protection of Vertical Openings	NFPA 101, 8.6.5(2)	1-HR fire barriers (<3 stories)
Protection from Hazards	NFPA 101	Smoke Partition w/A.S.S /, Doors to be self closing

Plumbing Fixture Counts (Per UFC 3-420-01, change 12, 01 April 2021)
With Note D

Water Closet Allowances (From Table 403-1)		Required
Number of Employees		
100 Staff Members Max	1 per 20 persons up to 100	5
	Total Provided	7, (with an additional (4) urinals)

Lavatory Allowances (From Table 403-2)		
Number of Employees		Required
100 Staff Members Max	1 per 20 persons up to 100	5
		8
	Total Provided	

Drinking Fountains Per UFC 403.1.3		Required
100 Staff Members Max	1 per 100 persons	1
	Total Provided	2

Service Sink Per UFC 403.1.3		Required
100 Staff Members Max	1 required	1
	Total Provided	1

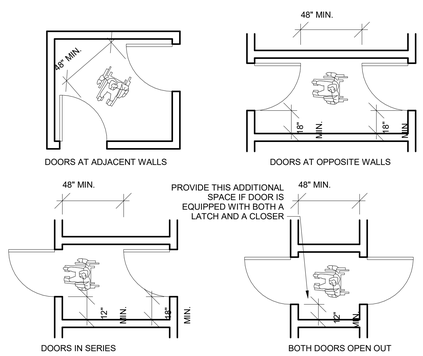

1 **ABA DOOR CLEARANCES**

Scale: 1/2" = 1'-0"

Project Management Initials: MR Designer: Designer Checker: Checker Approved: Approver/ARCH E1 30"x42"

Last Plotted: 5/23/2025 12:13:32 PM
Filename: BM-300-ISP-ABER-(GSA) 60637899-SFNCANG145#60637899_SF-NC ANG_R21_A.rvt

Printed on ___% Post-Consumer Recycled Content Paper

This drawing has been prepared for the use of AECOM's client and may not be used, reproduced or relied upon by third parties, except as agreed by AECOM and its client, as required by law or for use by governmental reviewing agencies. AECOM accepts no responsibility, and denies any liability whatsoever, to any party that modifies this drawing without AECOM's express written consent. Do not scale this document. All measurements must be obtained from the stated dimensions.

AECOM

PROJECT

NEW SECURITY FORCES BUILDING

PAYNE BLVD.
CHARLOTTE, NORTH CAROLINA 28208

CLIENT

NORTH CAROLINA AIR NATIONAL GUARD - 145TH AIRLIFT WING

145th AIRLIFT WING
4930 MINUTEMAN WAY
CHARLOTTE, NORTH CAROLINA 28208

ARCHITECT/DESIGNER

AECOM

277 W NATIONWIDE BLVD
COLUMBUS, OH 43215
614-464-4500

http://www.aecom.com

CONSULTANTS

REGISTRATION

KEY PLAN

ISSUE/REVISION

I/R	DATE	DESCRIPTION
	5/30/2025	B-3 SUBMITTAL - FINAL

PROJECT NUMBER

60637899
FJRP229030

SHEET TITLE

CODE INFORMATION

SHEET NUMBER

G002

©2023 AECOM Corporation

SECOND FLOOR OCCUPANCY TABLE

ROOM / SPACE			OCCUPANT LOAD FACTOR	OCCUPANCY COUNT	USE TYPE
NUMBER	NAME	AREA			
200	CONF. ROOM	309 SF	15 NET	21	ASSEMBLY
201	COMMANDER	130 SF	150 GROSS	1	BUSINESS
202	EXECUTIVE OFFICER	81 SF	150 GROSS	1	BUSINESS
203	FIRST SERGEANT	76 SF	150 GROSS	1	BUSINESS
204	SECURITY MGR/INVEST S2	78 SF	150 GROSS	1	BUSINESS
205	SECURITY FORCES MGR	78 SF	150 GROSS	1	BUSINESS
206	UNISEX TOILET	69 SF	150 GROSS	1	BUSINESS
207	COFFEE	26 SF	150 GROSS	1	BUSINESS
208	PRINT/COPY/ ELEV.EQ.RM.	49 SF	150 GROSS	1	BUSINESS
209	FLIGHT CHIEFS	191 SF	150 GROSS	2	BUSINESS
210	VEST	89 SF	150 GROSS	1	BUSINESS
211	QC/STAN/ EVAL/ TESTING	99 SF	150 GROSS	1	BUSINESS
213	COMMANDER SUPPORT STAFF	116 SF	150 GROSS	1	BUSINESS
214	HOTELING STATIONS	231 SF	150 GROSS	2	BUSINESS
215	HOTELING STATIONS	116 SF	150 GROSS	1	BUSINESS
216	SUPPLY MOBILITY MANAGEMENT	64 SF	150 GROSS	1	BUSINESS
217	OPERATIONS SUPERVISOR	67 SF	150 GROSS	1	BUSINESS
218	S5	66 SF	150 GROSS	1	BUSINESS
219	HOTELING STATION	68 SF	150 GROSS	1	BUSINESS
220	TRAINING MANAGER	79 SF	150 GROSS	1	BUSINESS
221	PROGRAM MANAGER	82 SF	150 GROSS	1	BUSINESS
222	CORR	1,052 SF	150 GROSS	8	BUSINESS

TOTAL OCCUPANT LOAD ON THE SECOND FLOOR: 51

FIRST FLOOR OCCUPANCY TABLE

ROOM / SPACE			OCCUPANT LOAD FACTOR	OCCUPANCY COUNT	USE TYPE
NUMBER	NAME	AREA			
100	VEST	89 SF	150 GROSS	1	BUSINESS
101	ID ENTRY	202 SF	150 GROSS	2	BUSINESS
102A	ACTIVE TRAINING	601 SF	15 NET	40	ASSEMBLY
102B	TRAINING	589 SF	15 NET	40	ASSEMBLY
103	PASS ID	174 SF	150 GROSS	2	BUSINESS
104	PPE STO/WEAPONS CLEANING	132 SF	300 GROSS	1	STORAGE
105	ELEC ROOM	86 SF	300 GROSS	1	STORAGE
106	BREAK	96 SF	150 GROSS	1	BUSINESS
107	MECH ROOM	111 SF	300 GROSS	1	STORAGE
109	HOUSE KEEPING	51 SF	300 GROSS	1	STORAGE
110	MENS	307 SF	150 GROSS	3	BUSINESS
111	WOMENS	221 SF	150 GROSS	2	BUSINESS
112	WEAPONS VAULT	427 SF	300 GROSS	2	STORAGE
113	LOCKERS	145 SF	150 GROSS	1	BUSINESS
114	COMMUNICATIONS ROOM	142 SF	300 GROSS	1	STORAGE
115	BDOC	319 SF	150 GROSS	3	BUSINESS
115A	UNISEX TOILET	65 SF	150 GROSS	1	BUSINESS
116	CORR	880 SF	150 GROSS	6	BUSINESS

TOTAL OCCUPANT LOAD ON THE FIRST FLOOR: 109

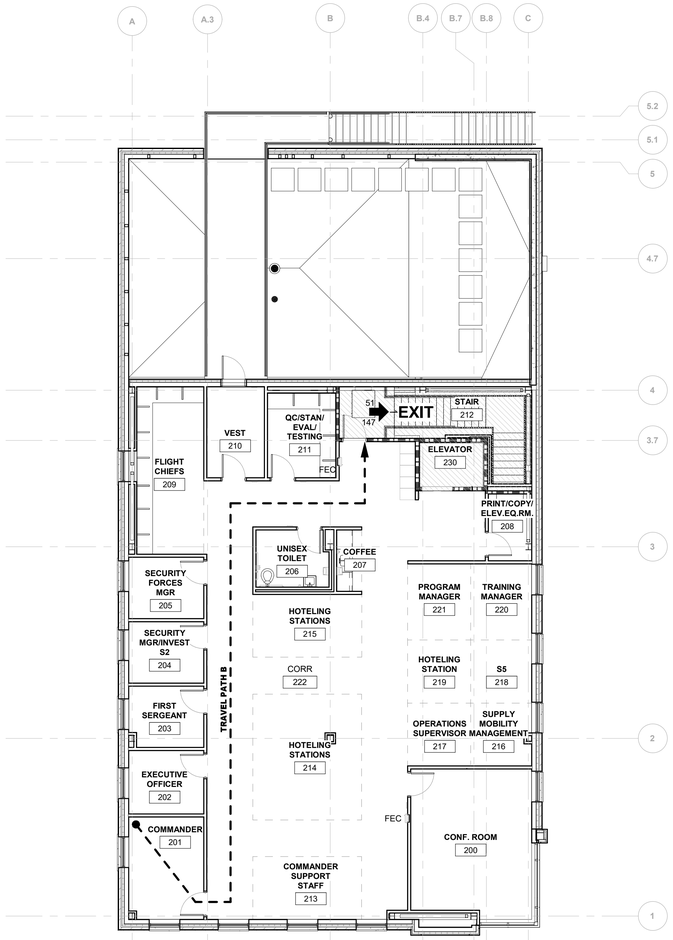

2 A201 **SECOND FLOOR - LIFE SAFETY PLAN**
Scale: 1/8" = 1'-0"

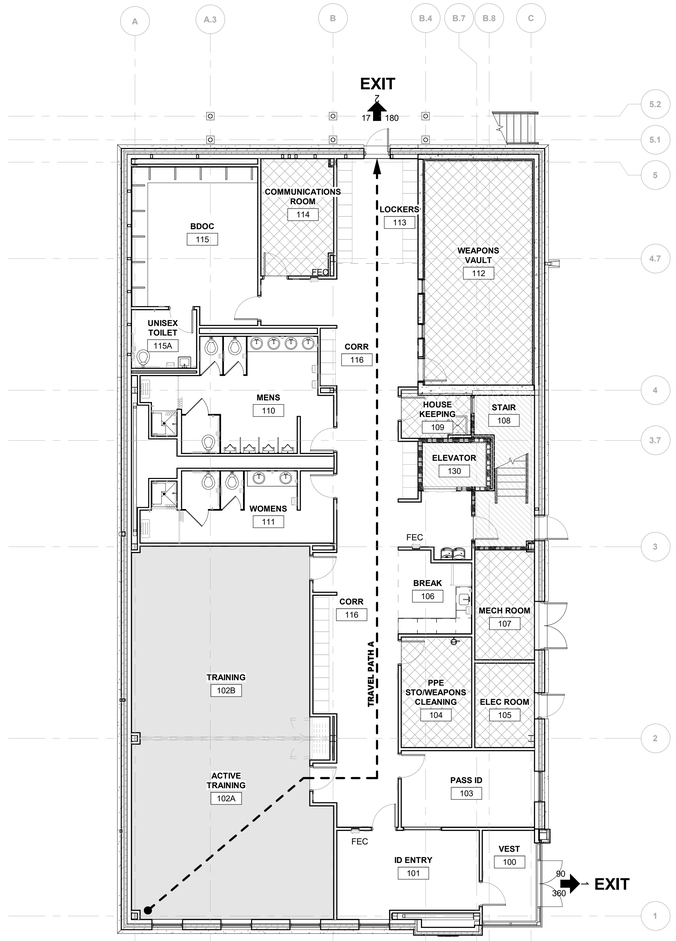

1 A201 **FIRST FLOOR - LIFE SAFETY PLAN**
Scale: 1/8" = 1'-0"

P.O.T. GROUND FLOOR

DESCRIPTION	DISTANCE
TRAVEL PATH A	117' - 0 101/256"
TRAVEL PATH B	94' - 10"

OCCUPANCY LEGEND

	A-3	ASSEMBLY
	B	BUSINESS
	S-1	STORAGE

LIFE SAFETY LEGEND

BASED ON 2021 IBC

FIRE PARTITIONS (IBC 708)

1 HR RATED BARRIER

FE FIRE EXTINGUISHER, WALL MOUNTED BRACKET

FEC FIRE EXTINGUISHER CABINET

XX 1 XX — ACTUAL LOAD / ALLOWABLE CAPACITY

N

AECOM

PROJECT

NEW SECURITY FORCES BUILDING

PAYNE BLVD.
CHARLOTTE, NORTH CAROLINA 28208

CLIENT

NORTH CAROLINA AIR NATIONAL GUARD - 145TH AIRLIFT WING

145th AIRLIFT WING
4930 MINUTEMAN WAY
CHARLOTTE, NORTH CAROLINA 28208

ARCHITECT/DESIGNER

AECOM

277 W NATIONWIDE BLVD
COLUMBUS, OH 43215
614-464-4500

http://www.aecom.com

CONSULTANTS

REGISTRATION

STATE OF OHIO
MARTY SIEBSE
1817301
REGISTERED ARCHITECT
5/30/2025

KEY PLAN

8 6 4 2 0 8 16
SCALE: 1/8"=1'-0"

ISSUE/REVISION

I/R	DATE	DESCRIPTION
	5/30/2025	B-3 SUBMITTAL - FINAL

PROJECT NUMBER

60637899
FJRP229030

SHEET TITLE

LIFE-SAFETY PLANS

SHEET NUMBER

G101

This drawing has been prepared for the use of AECOM's client and may not be used, reproduced or relied upon by third parties, except as agreed by AECOM and its client, as required by law or for use by governmental reviewing agencies. AECOM accepts no responsibility, and denies any liability whatsoever, to any party that modifies this drawing without AECOM's express written consent. Do not scale this document. All measurements must be obtained from the stated dimensions.

©2023 AECOM Corporation

Project Management Initials: MR Designer: Designer Checker: Checker Approved: ApproverARCH E1 30"x42"
Last Plotted: 5/30/2025 12:13:34 PM
Filename: BM 060-060-P-RAEDY-(USA) (60637899-SFNCANG145thWG37899_SF-NC-ANG_R21_A.rvt
Printed on ___% Post-Consumer Recycled Content Paper

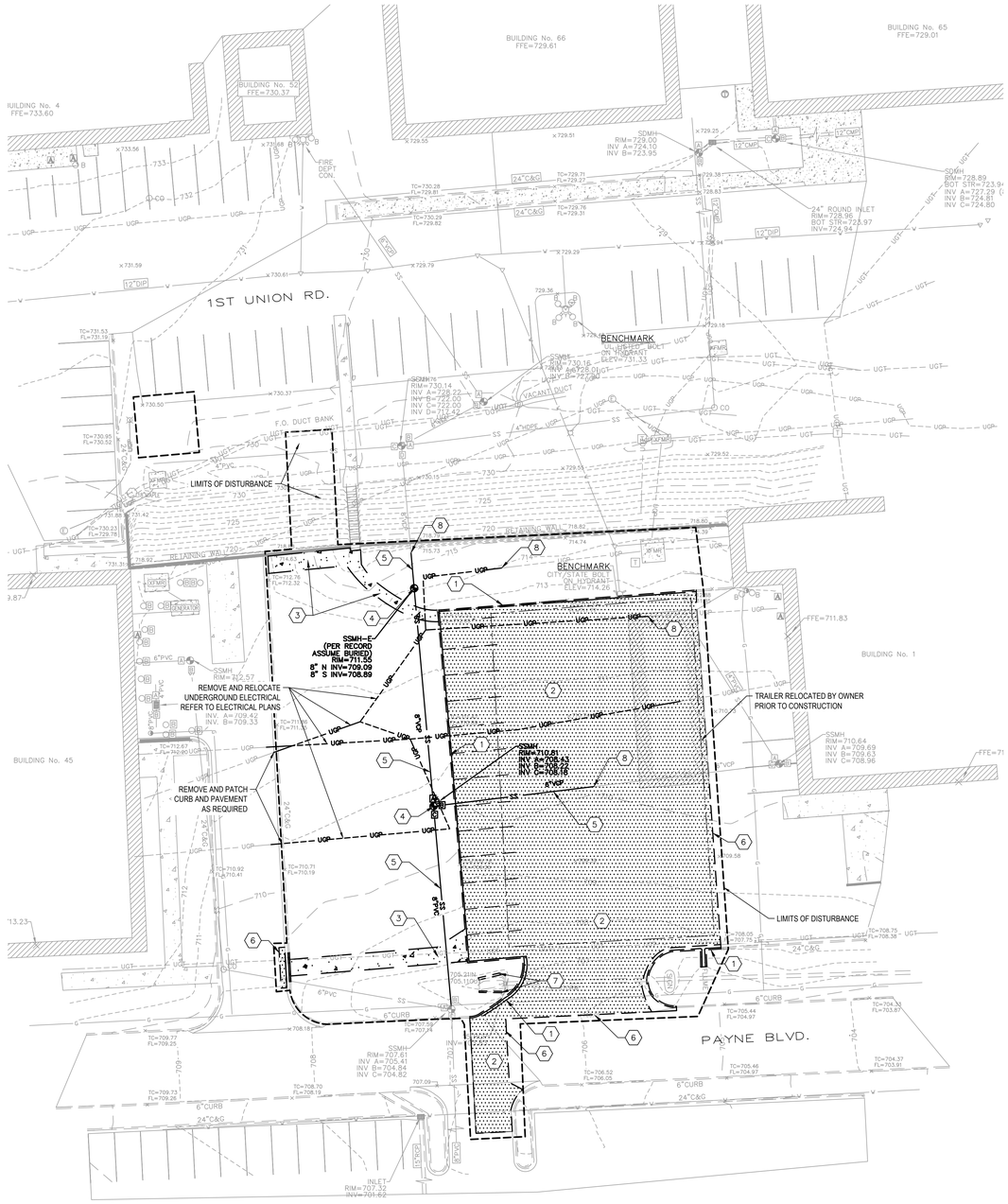

SITE REMOVAL NOTES

1. CONTRACTOR SHALL VERIFY EXISTING CONDITIONS PRIOR TO CONSTRUCTION. ANY DISCREPANCIES FOUND ARE TO BE BROUGHT TO THE ENGINEER'S ATTENTION PRIOR TO COMMENCEMENT OR CONTINUATION OF CONSTRUCTION ACTIVITIES.
2. CONTRACTOR SHALL COMPLY WITH ALL APPLICABLE DIVISION OF INDUSTRIAL REGULATIONS (OSHA) SAFETY STANDARDS. IF REQUESTED BY THE INSPECTOR, THE CONTRACTOR SHALL PROVIDE PROOF OF A PERMIT FROM SAID DIVISION.
3. CONTRACTOR SHALL NOTIFY THE CONTRACTING OFFICER AND/OR CONTRACTING OFFICER REPRESENTATIVE 48 HOURS PRIOR TO COMMENCING CONSTRUCTION AND 24 HOURS IN ADVANCE OF SPECIFIC INSPECTION NEEDS DURING THE COURSE OF THE WORK. ALL WORK SHALL BE PERFORMED DURING NORMAL WORKING HOURS. WHERE OVERTIME INSPECTION IS NEEDED, SUBJECT TO THE AVAILABILITY OF AN INSPECTOR, AND APPROVED BY THE ENGINEER, THE CONTRACTOR WILL BE BILLED FOR SAID INSPECTION SERVICES AS PROVIDED IN THE MOST RECENTLY ADOPTED RESOLUTION WHICH ESTABLISHES THE FEES FOR SUCH SERVICES.
4. UTILITY LOCATIONS AND DEPTHS SHOWN HEREON HAVE BEEN PLOTTED IN ACCORDANCE WITH DATA FURNISHED BY THE UTILITY COMPANIES, THE MUNICIPALITIES, AND A SITE SURVEY. ANY DISCREPANCIES DISCOVERED IN THE FIELD DURING CONSTRUCTION THAT HAVE AN IMPACT ON THE DESIGN INTENT ARE TO BE BROUGHT TO THE ATTENTION OF THE ENGINEER.
5. THE CONTRACTOR SHALL BE RESPONSIBLE FOR PROTECTING ALL PUBLIC AND PRIVATE PROPERTY INSOFAR AS IT MAY BE AFFECTED BY THESE OPERATIONS. ALL COSTS FOR PROTECTING, REMOVING, AND RESTORING EXISTING IMPROVEMENTS SHALL BE BORNE, SOLELY, BY THE CONTRACTOR.
6. CONSTRUCTION WORK ZONE TRAFFIC SIGNS AND STRIPING SHALL BE FURNISHED, INSTALLED, AND MAINTAINED IN ACCORDANCE WITH APPLICABLE REGULATORY AGENCIES HAVING JURISDICTION. A TRAFFIC CONTROL PLAN, PREPARED BY THE CONTRACTOR, MAY BE REQUIRED BY THE CONTRACTING OFFICER AND/OR CONTRACTING OFFICER REPRESENTATIVE. "CONSTRUCTION AHEAD" WARNING SIGNS ARE TO BE INSTALLED ALONG ADJACENT DRIVEWAYS OR ROADS. FLASHERS WITH CAUTION TAPE ARE TO BE INSTALLED WHERE ANY CONSTRUCTION ACTIVITY CROSSES A SIDEWALK OR PEDESTRIANS PATH IN ACCORDANCE WITH THE SPECIFICATIONS AND ANY/ALL LOCAL REGULATIONS.
7. NO STOPPING, PARKING, OR STORING OF CONSTRUCTION MATERIALS IN THE PUBLIC STREETS OR ANY DRIVEWAY.
8. CONTRACTOR SHALL CONTACT NC811 AT 1-800-632-4949, AT LEAST 3 WORKING DAYS PRIOR TO THE COMMENCEMENT OF CONSTRUCTION ACTIVITIES TO SCHEDULE THE MARKING OF EXISTING UTILITY LOCATIONS. CONTRACTOR RESPONSIBLE FOR LOCATE PRIVATE UTILITIES LINES.
9. CONTRACTOR SHALL REMOVE, ABANDON IN PLACE, ADJUST OR RECONSTRUCT EXISTING UNDERGROUND PUBLIC & PRIVATE INFRASTRUCTURE INCLUDING WATER MAIN, SANITARY SEWER AND STORM SEWER WITHIN THE PROJECT AREA.
10. EXISTING BELOW GROUND UTILITIES TO REMAIN SHALL BE LOCATED BY THE CONTRACTOR, INCLUDING HAND EXCAVATION AND OTHER MEANS NECESSARY, PRIOR TO CONSTRUCTION.
11. UTILITY STRUCTURES WITHIN REMOVAL BOUNDARY TO REMAIN SHALL BE RAISED OR LOWERED TO MATCH FINISHED GRADE. REFER TO SHEET C301 FOR GRADES. THIS INCLUDES, BUT IS NOT LIMITED TO, SANITARY, STORM, WATER, ELECTRICAL, TELECOM STRUCTURES, GATE VALVE BOXES, & HAND HOLES.
12. ELECTRICAL & TELECOM UTILITIES SERVICING ITEMS TO REMAIN SHALL BE FIELD VERIFIED & RELOCATED, AS NECESSARY, PRIOR TO DEMOLITION SUCH THAT THE OWNER DOES NOT EXPERIENCE ANY "OUTAGES" OR "FAILURES" WITH THEIR INTERNAL ELECTRICAL, TELEPHONE, SECURITY OR COMPUTER SYSTEMS. DAMAGE TO ANY OF THESE UNDERGROUND UTILITIES OR ELECTRICAL SYSTEMS SHALL RESULT IN THE CONTRACTOR HAVING TO MAKE THE NECESSARY REPAIRS TO THE OWNER'S SATISFACTION & AT NO COST TO THE OWNER.
13. COORDINATE ALL ELECTRICAL, GAS, AND TELECOM UTILITY REMOVAL/RELOCATION WITH APPROPRIATE UTILITY COMPANY.
14. UNDERGROUND SERVICE UTILITIES SHOWN TO BE REMOVED SHALL BE DONE SO ENTIRELY WITH THE REMAINING PORTIONS TO BE CAPPED/BULKHEADED (WHEN APPLICABLE) PER CITY/MUNICIPAL/UTILITY COMPANY STANDARDS.
15. CONCRETE WALKS & CURB & GUTTER SHOWN TO BE REMOVED SHALL BE DONE SO TO FULL DEPTH & SHALL BE SAWCUT AT THE NEAREST EXISTING JOINT.
16. CONCRETE & BITUMINOUS PAVEMENT AREAS SHOWN TO BE REMOVED SHALL BE DONE SO TO FULL DEPTH & SHALL BE SAWCUT ALONG THE REMOVAL BOUNDARY UNLESS OTHERWISE NOTED.
17. EXISTING TRAFFIC SIGNS ARE NOT TO BE REMOVED WITHOUT PRIOR NOTIFICATION AND APPROVAL OF THE CONTRACTING OFFICER OR CONTRACTING OFFICER'S REPRESENTATIVE. ANY SIGNS DAMAGED DURING CONSTRUCTION ACTIVITY SHALL BE REPLACED TO THE GOVERNMENT'S SATISFACTION, AT THE CONTRACTOR'S EXPENSE.
18. CONTRACTOR SHALL PROVIDE TRAFFIC CONTROL MEASURES AND PEDESTRIAN DETOUR SIGNAGE.
19. CONTRACTOR SHALL PROVIDE TEMPORARY SANITARY SEWER BYPASS DURING REMOVAL OF SANITARY SEWER AND CONSTRUCTION OF NEW SANITARY SEWER. SEE SANITARY SEWER LAYOUT ON UTILITY PLAN SHEET.

REMOVAL LEGEND

- CURB AND GUTTER REMOVAL
- ASPHALT PAVEMENT REMOVAL
- CONCRETE PAVEMENT REMOVAL
- LIMITS OF DISTURBANCE
- SANITARY SEWER REMOVAL
- UGP — UNDERGROUND POWER REMOVAL, REFER TO ELECTRICAL PLANS
- SANITARY MANHOLE REMOVAL
- LAYDOWN AREA

CODED NOTES

1. REMOVE CURB & GUTTER INCLUDING UNDERLYING BASE
2. FULL DEPTH ASPHALT PAVEMENT REMOVAL INCLUDING UNDERLYING BASE
3. CONCRETE SIDEWALK REMOVAL INCLUDING UNDERLYING BASE
4. REMOVE SANITARY SEWER MANHOLE
5. REMOVE SANITARY SEWER PIPE
6. SAWCUT PAVEMENT FULL DEPTH
7. REMOVE CONCRETE WINGWALL AS NEEDED TO INSTALL WATER MAIN
8. TEMPORARY PROTECT AND/OR PLUG EXISTING UTILITY LINE.

Know what's below. Call before you dig.

0 20 40 60
SCALE: 1"=20'

N

AECOM

PROJECT

NEW SECURITY FORCES BUILDING
PAYNE BLVD
CHARLOTTE, NORTH CAROLINA 28208

CLIENT

NORTH CAROLINA AIR NATIONAL GUARD-145TH AIRLIFT WING
145th AIRLIFT WING
4930 MINUTEMAN WAY
CHARLOTTE, NORTH CAROLINA 28208

CONSULTANT

AECOM
277 W NATIONWIDE BLVD
COLUMBUS, OHIO 43215
614-464-4500
http://www.aecom.com

CONSULTANTS

REGISTRATION

STATE OF MICHIGAN
JOSE CARLOS HERNANDEZ
CIVIL
No. 6201310139
LICENSED PROFESSIONAL ENGINEER
05/30/2025

KEY PLAN

ISSUE/REVISION

I/R	DATE	DESCRIPTION
	05/30/25	B-3 SUBMITTAL - FINAL

PROJECT NUMBER
60637899
FJRP229030

SHEET TITLE
DEMOLITION PLAN

SHEET NUMBER
C001

©2016 AECOM Corporation

08-ARCHITECTURE-A300-BUILDING SECTIONS ARCH E1 30"X42"
Project Management Initials: Designer: MCL Checked: GHF Approved: JRO
Last Plotted: 10/13/2025 11:42:45 AM
Filename: c:\users\michael.clodfelter\appdata\local\temp\aw - awscontrgeneral - 60637899-af no eng 145rj900_civil_jrp919_cad\civil\c-sheets\c001 demolition plan.dwg
Printed on ___% Post-Consumer Recycled Content Paper

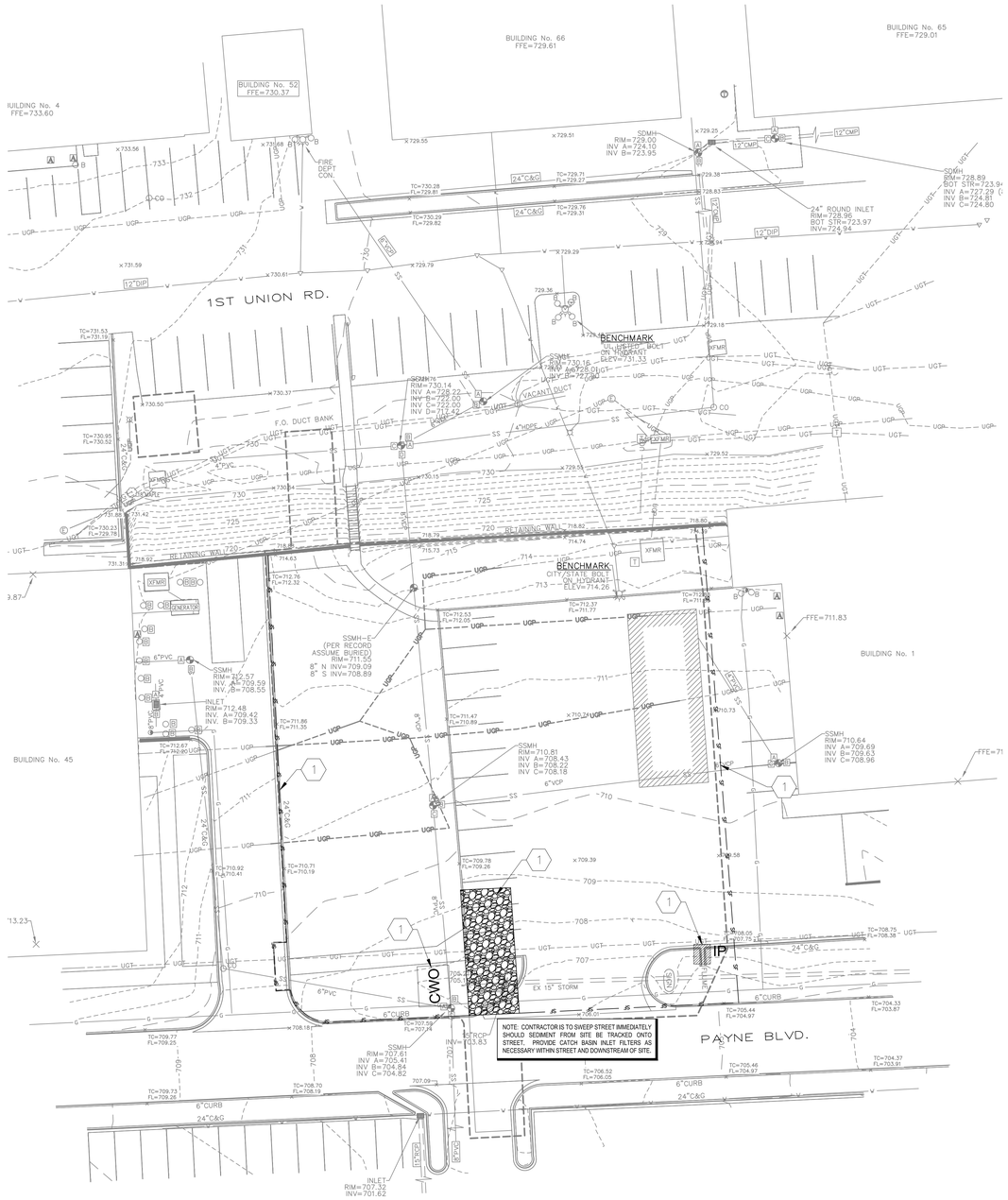

SITE LAYOUT NOTES

1. IT IS THE CONTRACTOR'S RESPONSIBILITY TO OBTAIN THE SOIL EROSION PERMIT FROM THE PROPER GOVERNING AUTHORITY.
2. THE CONTRACTING OFFICER AND/OR CONTRACTING OFFICER REPRESENTATIVE SHALL INSPECT THE SOIL EROSION/SEDIMENT CONTROL DEVICES ONCE EACH WEEK AND/OR WITHIN 24 HOURS OF A PRECIPITATION EVENT WHICH RESULTS IN A STORM DISCHARGE FROM THE SITE.
3. ALL DISTURBED NON-PAVEMENT AREAS MUST BE RESTORED WITH TOPSOIL, SEED, FERTILIZER, AND MULCH UNLESS SODDED. (SEE LANDSCAPE PLAN)
4. ALL SLOPES STEEPER THAN 1V:4H SHALL USE AN EROSION CONTROL BLANKET ACCORDING THE SLOPE. UNLESS INDICATED OTHERWISE ON PLANS.
5. SEEDING SHOULD BE PREPARED ACCORDING TO THE MANUFACTURER'S RECOMMENDATIONS. THE CONTRACTOR / INSPECTOR SHALL INSPECT THE AREA AFTER SEEDING IS COMPLETED. AREAS THAT ARE BARE OR NOT MULCHED PROPERLY WILL NEED TO BE SPOT SEEDED AND/OR RE-MULCHED.
6. SILT FENCE SHOULD BE TRENCHED IN, BACKFILLED, AND STAPLED OR STAKED ACCORDING TO THE MANUFACTURER'S SPECIFICATIONS. MAINTENANCE INCLUDES THE REMOVAL OF BUILT-UP SEDIMENT WHEN THE SEDIMENT ACCUMULATES TO 1/3 TO 1/2 THE HEIGHT OF THE FENCE. CONTRACTOR SHALL REMOVE, REPLACE, RETRENCH, OR REBACKFILL THE FENCE IF IT FAILS. CONTRACTOR SHALL REINSTALL IF ANY PORTION OF THE FENCING IS DAMAGED BY CONSTRUCTION MACHINERY.
7. INLET FILTERS SHALL BE SILT SACKS, DANDY BAGS, OR APPROVED EQUAL. INLET FILTERS SHALL BE INSPECTED FOR BUILDUP OF SILT AND OTHER DEBRIS. THIS IS EVIDENT IF STRUCTURE IS CAUSING FLOODING. MAINTENANCE SHALL CONSIST OF REMOVING OF SEDIMENTS OR REPLACING FILTER AS NECESSARY.
8. SOIL EROSION CONTROL METHODS SHOWN ARE A GUIDELINE AND DO NOT RELIEVE THE CONTRACTOR FROM ADDITIONAL METHODS THAT MAY BE REQUIRED BY THE SOIL EROSION CONTROL PERMIT.
9. THE CONTRACTING OFFICER AND/OR CONTRACTING OFFICER REPRESENTATIVE WILL ENGAGE A CERTIFIED STORM WATER OPERATOR IN ACCORDANCE WITH EPA PHASE II RULES TO MEET REQUIREMENTS OF THE PERMIT. THIS OPERATOR WILL INSPECT THE JOB SITE AS REQUIRED BY RULE, NOTIFY JOB SITE SUPERINTENDENT OF ANY DEFICIENCIES, AND ENTER FINDINGS IN THE JOB SITE INSPECTION JOB BOOK.
10. TOTAL DISTURBED AREA = 0.68 ACRES.

CODED NOTES

1. REFER TO DETAILS ON SHEETS C-003.

PROPOSED SITE LEGEND

IP	INLET PROTECTION
CWO	CONCRETE WASHOUT
SF	SILT FENCE
	LIMITS OF DISTURBANCE
	STABILIZED CONSTRUCTION ENTRANCE SEE DETAIL SHEET CE501

Know what's below. Call before you dig.

0 20 40 60
SCALE: 1"=20'

N

AECOM

PROJECT

NEW SECURITY FORCES BUILDING
PAYNE BLVD
CHARLOTTE, NORTH CAROLINA 28208

CLIENT

NORTH CAROLINA AIR NATIONAL GUARD-145TH AIRLIFT WING
145th AIRLIFT WING
4930 MINUTEMAN WAY
CHARLOTTE, NORTH CAROLINA 28208

CONSULTANT

AECOM
277 W NATIONWIDE BLVD
COLUMBUS, OHIO 43215
614-464-4500
http://www.aecom.com

CONSULTANTS

REGISTRATION

STATE OF MICHIGAN
JOSE CARLOS HERNANDEZ
CIVIL
No. 6201310139
LICENSED PROFESSIONAL ENGINEER
05/30/2025

KEY PLAN

ISSUE/REVISION

I/R	DATE	DESCRIPTION
	05/30/25	B-3 SUBMITTAL - FINAL

PROJECT NUMBER
60637899
FJRP229030

SHEET TITLE
EROSION CONTROL PLAN

SHEET NUMBER
C002

©2016 AECOM Corporation

08-ARCHITECTURE-A300-BUILDING SECTIONS ARCH E1 30"X42"
Project Management Initials: Designer: MCL Checked: GHF Approved: JRO
Last Plotted: 10/13/2025 11:42:49 AM
Filename: J:\60637899-nc-ang 145th\00_cad_grid\10_cad\civil\c-sheets\c002 erosion control plan.dwg

Printed on ___% Post-Consumer Recycled Content Paper

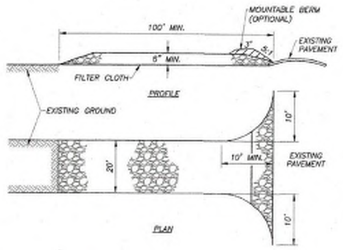

STABILIZED CONSTRUCTION ENTRANCE
NO SCALE

1. STONE SIZE – USE 2" STONE, OR RECLAIMED OR RECYCLED CONCRETE EQUIVALENT. ITEM 304 SHALL NOT BE ADDED TO THE STONE.
2. LENGTH – ONE HUNDRED (100) FEET MINIMUM.
3. THICKNESS – NOT LESS THAN SIX (6) INCHES.
4. WIDTH – TWENTY (20) FEET MINIMUM, BUT NOT LESS THAN THE FULL WIDTH AT POINTS WHERE INGRESS OR EGRESS OCCURS.
5. FILTER CLOTH – WILL BE PLACED OVER ENTIRE AREA PRIOR TO PLACING OF STONE.
6. SURFACE WATER – ALL SURFACE WATER FLOWING OR DIVERTED TOWARD CONSTRUCTION ENTRANCES SHALL BE PIPED ACROSS THE ENTRANCE. IF PIPING IS IMPRACTICAL, A MOUNTABLE BERM WITH 5:1 SLOPES WILL BE PERMITTED. COST OF PIPE SHALL BE INCLUDED IN THE PRICE BID FOR THE STABILIZED CONSTRUCTION ENTRANCE.
7. MAINTENANCE – THE ENTRANCE SHALL BE MAINTAINED IN A CONDITION WHICH WILL PREVENT TRACKING OR FLOWING OF SEDIMENT ONTO PUBLIC RIGHT-OF-WAY. THIS MAY REQUIRE PERIODIC TOP DRESSING WITH ADDITIONAL STONE AS CONDITIONS DEMAND AND REPAIR AND/OR CLEANOUT OF ANY MEASURES USED TO TRAP SEDIMENT. ALL SEDIMENT SPILLED, DROPPED, WASHED OR TRACKED ONTO PUBLIC RIGHTS-OF-WAY MUST BE REMOVED IMMEDIATELY.
8. WASHING – WHEELS SHALL BE CLEANED TO REMOVE SEDIMENT PRIOR TO ENTRANCE ONTO PUBLIC RIGHT-OF-WAYS. WHEN WASHING IS REQUIRED, IT SHALL BE DONE ON AN AREA STABILIZED WITH STONE AND WHICH DRAINS INTO AN APPROVED SEDIMENT TRAPPING DEVICE. MANNED WHEEL WASH STATIONS MAY BE REQUIRED.
9. PERIODIC INSPECTION AND NEEDED MAINTENANCE SHALL BE PROVIDED AFTER EACH RAIN. VACUUM STREET SWEEPING FOR THE PUBLIC STREETS TO BE PERFORMED ROUTINELY AND WHEN REQUIRED BY THE CITY ENGINEER.

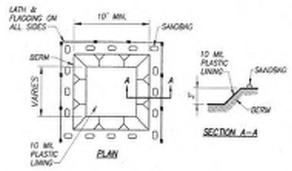

TEMPORARY CONCRETE WASHOUT FACILITY (TYPE BELOW GRADE) SHOULD BE CONSTRUCTED AS SHOWN ON THE DETAIL, WITH A RECOMMENDED MINIMUM LENGTH AND MINIMUM WIDTH OF 10 FEET. THE QUANTITY AND VOLUME SHOULD BE SUFFICIENT TO CONTAIN ALL LIQUID AND CONCRETE WASTE GENERATED BY WASHOUT OPERATIONS.

LATH AND FLAGGING SHOULD BE COMMERCIAL TYPE.

PLASTIC LINING MATERIAL SHOULD BE A MINIMUM OF 10 MIL POLYETHYLENE SHEETING AND SHOULD BE FREE OF HOLES, TEARS, OR OTHER DEFECTS THAT COMPROMISE THE IMPERMEABILITY OF THE MATERIAL.

COORDINATE LOCATION IN THE FIELD WITH PROJECT MANAGER.

TEMPORARY CONCRETE WASHOUT FACILITY
(TYPE BELOW GRADE)
NO SCALE

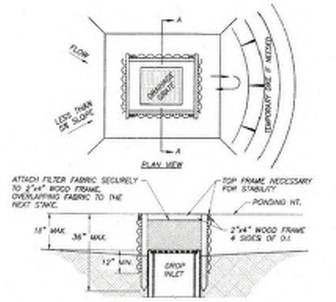

NOTES:
1. DROP INLET SEDIMENT BARRIERS ARE TO BE USED FOR SMALL, NEARLY LEVEL DRAINAGE AREAS. (LESS THAN 5%)
2. USE 2"x4" WOOD OR EQUIVALENT METAL STAKES, 3' MIN. LENGTH.
3. INSTALL 2"x4" WOOD TOP FRAME TO INSURE STABILITY.
4. THE TOP OF THE FRAME (PONDING HEIGHT) MUST BE WELL BELOW THE GROUND ELEVATION DOWN SLOPE TO PREVENT RUNOFF FROM BYPASSING INLET. A TEMPORARY DIKE MAY BE NECESSARY ON THE DOWN SLOPE SIDE OF THE STRUCTURE.

SILT FENCE DROP INLET SEDIMENT BARRIER
ALTERNATE CATCH BASIN PROTECTION

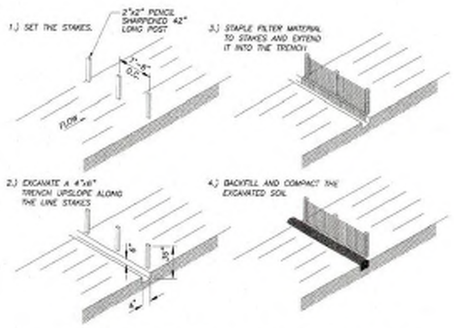

1. UPPER BANK ABOVE NORMAL WATER ELEVATION SHOULD BE STABILIZED QUICKLY WITH STRAW BLANKETS, JUTE MATTING OR SIMILAR GEOTEXTILE.

2. THE USE OF STRAW WATTLES HAS PROVEN TO BE VERSATILE AND EFFECTIVE ESC BMP. ESPECIALLY IN RESIDENTIAL SETTINGS. STRAW WATTLES MAY BE SUBSTITUTED FOR SILT FENCE IN LINEAR INSTALLATIONS.

FABRIC FILTER BARRIER
NO SCALE

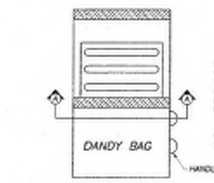

INSTALLATION: STAND GRATE ON END. PLACE DANDY BAG OVER GRATE. FLIP GRATE OVER SO THAT OPEN END IS UP. PULL UP SLACK. TUCK FLAP IN. BE SURE END OF GRATE IS COMPLETELY COVERED BY FLAP OR DANDY BAG WILL NOT FIT PROPERLY. HOLDING HANDLES, CAREFULLY PLACE DANDY BAG WITH GRATE INSERTED INTO CATCH BASIN FRAME SO THAT RED DOT ON THE TOP OF DANDY BAG IS VISIBLE.

MAINTENANCE: AFTER SILT HAS DRIED, REMOVE IT FROM THE SURFACE OF DANDY BAG WITH BROOM.

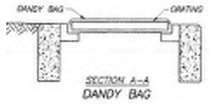

CATCH BASIN PROTECTION
NO SCALE

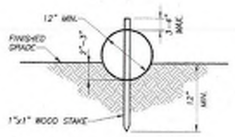

FILTER SOCK DETAIL
NO SCALE

MATERIAL:
COMPOST USED FOR FILTER SOCKS SHALL BE WEED, PATHOGEN, AND INSECT FREE AND FREE OF ANY REFUSE, CONTAMINANTS OR OTHER MATERIALS TOXIC TO PLANT GROWTH. THEY SHALL BE DERIVED FROM A WELL-DECOMPOSED SOURCE OF ORGANIC MATTER AND CONSIST OF A PARTICLES FANGING FROM 3/8" TO 2"

FILTER SOCKS SHALL BE 3 OR 5 MIL CONTINUOUS, TUBULAR, HDPE 3/8" KNITTED MESH NETTING MATERIAL, FILLED WITH COMPOST PASSING THE ABOVE SPECIFICATION FOR COMPOST PRODUCTS.

PREPARATION:
PROPER SITE PREPARATION IS ESSENTIAL TO ENSURE COMPLETE CONTACT OF THE SEDIMENT RETENTION DEVICE WITH THE SOIL.

REMOVE ALL ROCKS, CLODS, VEGETATION OR OTHER OBSTRUCTIONS SO THAT THE INSTALLED FILTER SOCK WILL HAVE DIRECT CONTACT WITH THE SOIL.

A SMALL TRENCH 2-3 INCHES IN DEPTH SHOULD BE EXCAVATED ON THE SLOPE CONTOUR AND PERPENDICULAR TO WATER FLOW. SOIL FROM THE EXCAVATION SHOULD BE PLACED DOWN-SLOPE NEXT TO THE TRENCH.

INSTALLATION:
FILTER SOCKS WILL BE PLACED ON A LEVEL LINE ACROSS SLOPES, GENERALLY PARALLEL TO THE BASE OF SLOPE OR OTHER AFFECTED AREA. ON SLOPES APPROACHING 2:1, ADDITIONAL SOCKS SHALL BE PROVIDED AT THE TOP AND AS NEEDED MID SLOPE.

FILTER SOCKS ARE NOT TO BE USED IN CONCENTRATED FLOW SITUATION OR IN RUN-OFF CHANNELS

WOODEN STAKES SHOULD BE USED TO FASTEN THE FILTER SOCK TO THE SOIL.

WOODEN STAKES SHOULD BE PLACED 6" FROM THE FILTER SOCK END ANGLED TOWARD THE ADJACENT FILTER SOCK AND SPACED AT 4 FEET CENTERS LEAVING LESS THAN 3-4 INCHES OF STAKE EXPOSED ABOVE THE FILTER SOCK.

TERMINAL ENDS OF FILTER SOCK SHOULD BE DOG LEGGED UP SLOPE TO ENSURE CONTAINMENT AND PREVENT CHANNELING OF SEDIMENTATION.

BACKFILL THE UPSLOPE LENGTH OF THE FILTER SOCK WITH THE EXCAVATED SOIL AND COMPACT.

CARE SHALL BE TAKEN DURING INSTALLATION SO AS TO AVOID DAMAGE OCCURRING TO THE FILTER SOCK AS A RESULT OF THE INSTALLATION PROCESS. SHOULD THE FILTER SOCK BE DAMAGED DURING INSTALLATION, A WOODEN STAKE SHALL BE PLACED EITHER SIDE OF THE DAMAGED AREA TERMINATING THE LOG SEGMENT.

FIELD MONITORING SHALL BE PERFORMED TO VERIFY THAT PLACEMENT DOES NOT DAMAGE THE FILTER SOCK.

WATTLES TO BE PLACED ALONG PERIMETER OF THE SITE CONSISTING OF A CONCRETE SURFACE, SHALL BE SECURELY PLACED TO ENSURE RUNOFF CANNOT FLOW UNDER THE WATTLE.

FILTER SOCKS SHALL BE REMOVED AFTER PERMANENT VEGETATION IS FULLY ESTABLISHED AND THE SITE IS FULLY STABILIZED

AECOM

PROJECT

NEW SECURITY FORCES BUILDING
PAYNE BLVD
CHARLOTTE, NORTH CAROLINA 28208

CLIENT

NORTH CAROLINA AIR NATIONAL GUARD-145TH AIRLIFT WING
145th AIRLIFT WING
4930 MINUTEMAN WAY
CHARLOTTE, NORTH CAROLINA 28208

CONSULTANT

AECOM
277 W NATIONWIDE BLVD
COLUMBUS, OHIO 43215
614-464-4500
http://www.aecom.com

CONSULTANTS

REGISTRATION

STATE OF MICHIGAN
JOSE CARLOS HERNANDEZ
CIVIL
No. 6201310139
LICENSED PROFESSIONAL ENGINEER
05/30/2025

KEY PLAN

ISSUE/REVISION

I/R	DATE	DESCRIPTION
	05/30/25	B-3 SUBMITTAL - FINAL

PROJECT NUMBER
60637899
FJRP229030

SHEET TITLE
SESC DETAILS

SHEET NUMBER
C003

©2016 AECOM Corporation

Last Plotted: 10/13/2025 11:42:53 AM
Filename: C:\aecomhernandezcorp\aecomcollective - aecomhgeneral - 60637899-af nc org 145180_cad_grp\10_cad\civil\c-sheets\c-003 sesc details.dwg

Printed on ____% Post-Consumer Recycled Content Paper

08-ARCHITECTURE-A300-BUILDING SECTIONS
Project Management Initials:
Designer: MCL
Checked: GHF
Approved: JRO
ARCH E1 30"X42"

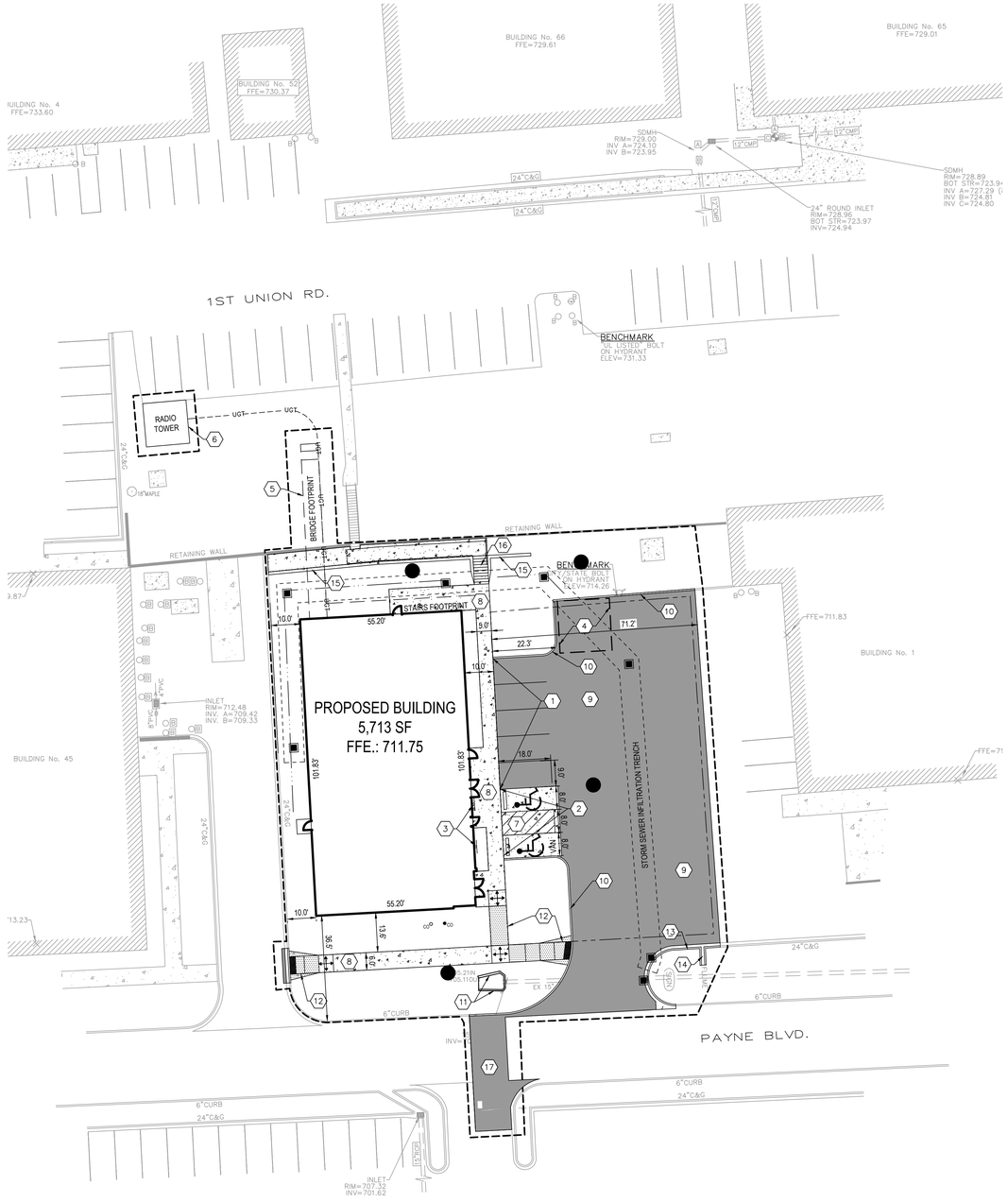

SITE LAYOUT NOTES

1. SEE ELECTRICAL PLANS FOR LOCATION AND DETAILS ON SITE LIGHTING & ELECTRICAL FEATURES.
2. SEE ARCHITECTURAL PLANS FOR CONCRETE STOOP CONNECTION DETAILS.
3. SEE ARCHITECTURAL FOUNDATION PLAN FOR DETAILING OF BUILDING AND EXACT BUILDING DIMENSIONS.
4. COORDINATE WITH IRRIGATION AND ELECTRICAL CONTRACTOR FOR SIZE AND PLACEMENT OF ALL SLEEVES PRIOR TO PAVING, CONCRETE AND LANDSCAPE WORK.
5. CONCRETE GUTTER PAN SHALL TIP IN THE SAME DIRECTION AS THE ADJACENT PAVEMENT.
6. SMOOTH, GRADUAL FLOW LINE TRANSITIONS SHALL BE CONSTRUCTED BETWEEN STANDARD GUTTER PAN AND INVERTED GUTTER PAN AND MAINTAIN DRAINAGE.
7. ALL DIMENSIONS SHOWN TO CONCRETE CURB & GUTTER ARE TO FRONT/FACE OF CURB UNLESS NOTED OTHERWISE. BC = BACK OF CURB, FC = FACE OF CURB, EOP = EDGE OF PAVEMENT
8. THE LAST THREE FEET OF ALL CURBS SHALL BE DUBBED DOWN UNLESS NOTED OTHERWISE.
9. ALL NCDOT REFERENCES ARE TO THE 2018 EDITION OF STANDARD SPECIFICATIONS FOR ALL CURB/GUTTER, PAVEMENT, ETC. THE AUTHORITY HAVING JURISDICTION FOR ALL CONSTRUCTION ON BASE IS THE CONTRACTING OFFICER OR CONTRACTING OFFICER'S REPRESENTATIVE.
12. CONTRACTOR IS RESPONSIBLE TO COORDINATE ALL SITE UTILITY CONNECTIONS AND INSPECTIONS WITH THE PROPER JURISDICTION AND PAY ALL ASSOCIATED FEES.
13. THE CONTRACTOR SHALL FIELD VERIFY LOCATION AND ELEVATION OF EXISTING WATER, SANITARY SEWER, AND STORM SEWER CROSSINGS AND CONNECTION POINTS PRIOR TO CONSTRUCTION. CONTACT ENGINEER WITH ANY DISCREPANCIES.
14. ALL PAVEMENT MARKINGS SHALL BE 4" WIDE. STANDARD PARKING SPACES SHALL BE MARKED IN WHITE AND BARRIER FREE SPACES IN BLUE. EACH BARRIER FREE SPACE SHALL BE PROVIDED WITH A PAINTED PAVEMENT SYMBOL, A PRECAST CONCRETE BUMPER BLOCK, AND A SIGN PER THE MANUAL OF UNIFORM TRAFFIC CONTROLS.

CODED NOTES

1.	CONCRETE TURNED DOWN SIDEWALK	DETAIL #1C / C-501
2.	SIDEWALK FLUSH TURN DOWN EDGE	DETAIL #2C / C-501
3.	BUILDING MOUNTED ACCESSIBLE PARKING SIGN	DETAIL #1A / C-502
4.	PREFABRICATED CAR PORT FOR TWO VEHICLES	
5.	PREFABRICATED PEDESTRIAN BRIDGE WITH EXTERIOR STAIRS, REFER TO STRUCTURAL PLANS	
6.	ROHN SSV SELF-SUPPORTING TOWER, SECTIONS 1WB AND 2W AS BASIS OF DESIGN. FOUNDATIONS TO BE DESIGNED BY THE MANUFACTURER AND COORDINATED WITH THE GEOTECHNICAL AND STRUCTURAL ENGINEER.	
7.	CONCRETE PAVEMENT STANDARD DUTY	DETAIL #1D / C-501
8.	CONCRETE SIDEWALK	DETAIL #1A / C-501
9.	ASPHALT PAVEMENT STANDARD DUTY	DETAIL #1B / C-501
10.	CONCRETE CURB	DETAIL #3D / C-501
11.	CONCRETE WINGWALL, CAST IN PLACE (REPLACE IN KIND)	
12.	SIDEWALK CURB RAMP	DETAIL #848.05 / C-501
13.	CONCRETE CURB AND GUTTER	DETAIL #2A / C-501
14.	CONCRETE SPILLWAY	DETAIL #4C / C-501
15.	SEGMENTAL BLOCK RETAINING WALL WITH HANDRAIL OR EQUAL	DETAIL #4A / C-502
16.	CONCRETE STAIRS WITH HANDRAILS	DETAIL #3C / C-501
17.	ASPHALT PAVEMENT HEAVY DUTY	DETAIL #2B / C-501

PROPOSED SITE LEGEND

- ASPHALT PAVEMENT
- CONCRETE PAVEMENT
- CATCH BASIN
- SANITARY MANHOLE
- STORM MANHOLE
- SIDEWALK CURB RAMP
- CURB & GUTTER
- CURB
- BUILDING MOUNTED ACCESSIBLE PARKING SIGN
- CO UTILITY SYSTEM INLINE CLEANOUT
- LIMITS OF DISTURBANCE
- LIMITS OF STORM SEWER INFILTRATION TRENCH
- VEGETATED SWALE
- LAYDOWN AREA

Know what's below. Call before you dig.

0 20 40 60
SCALE: 1"=20'

N

AECOM

PROJECT

NEW SECURITY FORCES BUILDING
PAYNE BLVD
CHARLOTTE, NORTH CAROLINA 28208

CLIENT

NORTH CAROLINA AIR NATIONAL GUARD-145TH AIRLIFT WING
145th AIRLIFT WING
4930 MINUTEMAN WAY
CHARLOTTE, NORTH CAROLINA 28208

CONSULTANT

AECOM
277 W NATIONWIDE BLVD
COLUMBUS, OHIO 43215
614-464-4500
http://www.aecom.com

CONSULTANTS

REGISTRATION

STATE OF MICHIGAN
JOSE CARLOS HERNANDEZ
CIVIL
No. 6201310139
LICENSED PROFESSIONAL ENGINEER
05/30/2025

KEY PLAN

ISSUE/REVISION

I/R	DATE	DESCRIPTION
	05/30/25	B-3 SUBMITTAL - FINAL

PROJECT NUMBER
60637899
FJRP229030

SHEET TITLE
SITE LAYOUT PLAN

SHEET NUMBER
C101

Last Plotted: 10/13/2025 11:42:57 AM
Filename: c:\users\hernandezcarlos\appdata\local\temp\acpublish_60637899\d-nc-wng 145900_cad_grid\10_cad\civil\c-sheets\c101 site layout plan.dwg
Printed on ___% Post-Consumer Recycled Content Paper
©2016 AECOM Corporation

08-ARCHITECTURE-A300-BUILDING SECTIONS
Project Management Initials: Designer: MCL Checked: GHF Approved: JRO ARCH E1 30"x42"

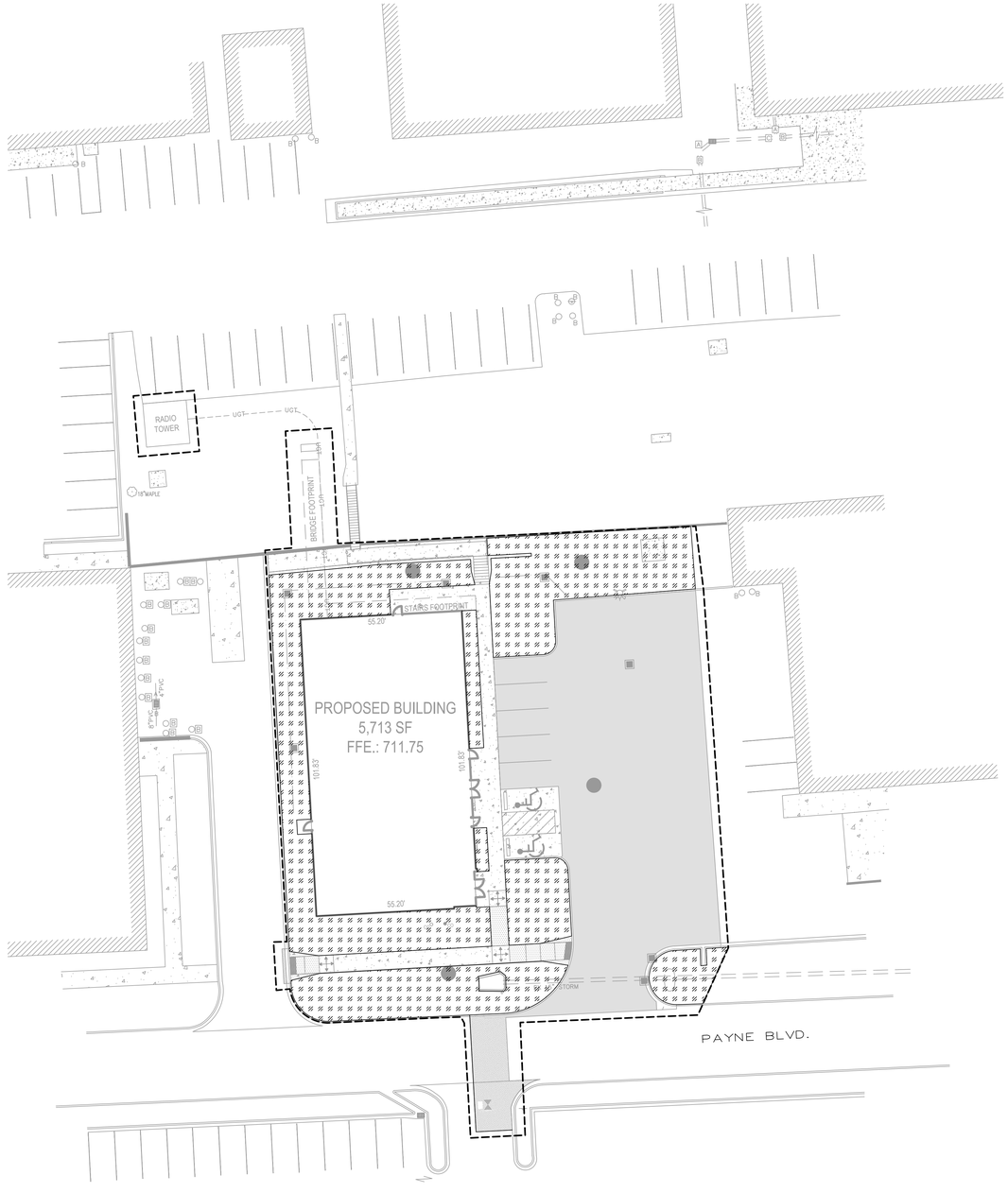

PROPOSED SITE LEGEND

	ASPHALT PAVEMENT
	CONCRETE PAVEMENT
	SURFACE STRUCTURES
	SIDEWALK CURB RAMP
	CURB & GUTTER
	CURB
	BUILDING MOUNTED ACCESSIBLE PARKING SIGN
	LIMITS OF DISTURBANCE
	VEGETATED SWALE
	LAWN, 4" MIN. OF TOPSOIL
	OSTRYA VIRGINIANA
LM	LIRIOPE MUSCARI
SH	SPOROBOLUS HETEROLEPIS

Know what's **below.**
Call before you dig.

0 20 40 60
SCALE: 1"=20'

N

AECOM

PROJECT

NEW SECURITY FORCES BUILDING
PAYNE BLVD
CHARLOTTE, NORTH CAROLINA 28208

CLIENT

NORTH CAROLINA AIR NATIONAL GUARD-145TH AIRLIFT WING
145th AIRLIFT WING
4930 MINUTEMAN WAY
CHARLOTTE, NORTH CAROLINA 28208

CONSULTANT

AECOM
277 W NATIONWIDE BLVD
COLUMBUS, OHIO 43215
614-464-4500
http://www.aecom.com

CONSULTANTS

REGISTRATION

STATE OF MICHIGAN
JOSE CARLOS HERNANDEZ
CIVIL
No. 6201310139
LICENSED PROFESSIONAL ENGINEER
05/30/2025

KEY PLAN

ISSUE/REVISION

I/R	DATE	DESCRIPTION
	05/30/25	B-3 SUBMITTAL - FINAL

PROJECT NUMBER
60637899
FJRP229030

SHEET TITLE
LANDSCAPING PLAN

SHEET NUMBER
C102

Last Plotted: 10/13/2025 11:43:02 AM
Filename: c:\users\hernandezcarlos\appdata\local\temp\acecontextdrive - aecomlgeneral - 60637899-af hc eng 145900_cad_grid\10_cad\civil\c-sheets\c102 landscaping plan.dwg

Printed on ___% Post-Consumer Recycled Content Paper

©2016 AECOM Corporation

08-ARCHITECTURE-A300-BUILDING SECTIONS
Project Management Initials: Designer: MCL Checked: GHF Approved: JRO ARCH E1 30"X42"

UTILITY CROSSING TABLE

(A) PROPOSED 2" ELECTRIC TO CROSS OVER
PROPOSED 12" STRM
GRADE EL: 711.00'
ELECTRIC BOT 707.50'
STRM TOP: 706.50'
CLEARANCE: 1.00'

(B) PROPOSED 8" SSWR TO CROSS OVER
PROPOSED 12" STRM
GRADE EL: 711.00'
SSWR BOT: 709.02'
STRM TOP: 706.14'
CLEARANCE: 2.88'

(C) EXISTING 6" SSWR TO CROSS OVER
PROPOSED 12" STRM
GRADE EL: 710.10'
SSWR BOT: 708.54'
STRM TOP: 705.67'
CLEARANCE: 2.87'

(D) PROPOSED 2" ELECTRIC TO CROSS OVER
PROPOSED 6" WATR
GRADE EL: 711.15'
ELECTRIC BOT 707.98'
WATR TOP: 706.90'
CLEARANCE: 1.08'

(E) PROPOSED 8" SSWR TO CROSS OVER
PROPOSED 6" WATR
GRADE EL: 711.22'
SSWR BOT: 706.69'
WATR TOP: 705.10'
CLEARANCE: 1.59'

(F) PROPOSED 6" STRM TO CROSS OVER
PROPOSED 8" SSWR
GRADE EL: 710.00'
STRM BOT: 707.47'
SSWR TOP: 705.91'
CLEARANCE: 1.56'

(G) PROP.6" STRM TO CROSS OVER
PROP.8" SSWR
GRADE EL: 710.00'
STRM BOT: 706.97'
SSWR TOP: 705.96'
CLEARANCE: 1.01'

(H) PROPOSED 6" STRM TO CROSS OVER
PROPOSED 6" WATR
GRADE EL: 710.60'
STRM BOT: 706.01'
WATR TOP: 704.10'
CLEARANCE: 1.91'

(I) PROPOSED 6" WATR TO CROSS OVER
EXISTING 6" GAS
GRADE EL: 707.10'
WATR BOT: 703.53'
GAS TOP: 701.00'
CLEARANCE: 2.52'

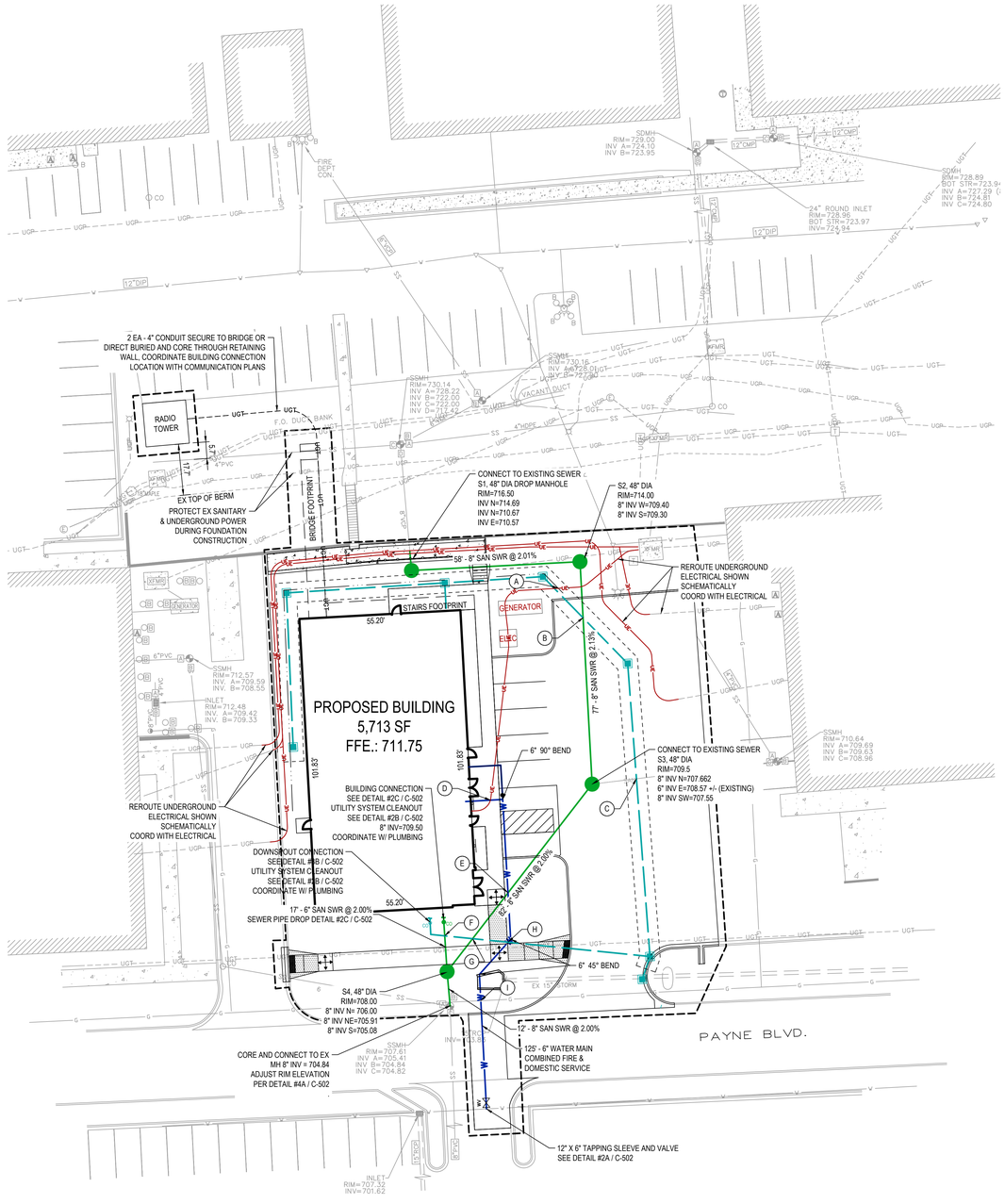

SITE UTILITY NOTES

1. PRIOR TO PROCEEDING WITH UTILITY CONSTRUCTION, CONTRACTOR SHALL UNCOVER ALL EXISTING UTILITIES TO REMAIN AND REPORT TOP OF PIPE ELEVATION TO OWNER AND ENGINEER.
2. CONTRACTOR SHALL ADJUST ALL UNDERGROUND STRUCTURES AND CORRESPONDING SURFACE FEATURES TO PROPOSED GRADES IN ACCORDANCE WITH THE SPECIFICATIONS.
3. COMMUNICATIONS & ELECTRICAL CONDUITS, PLACEMENT OF ELECTRICAL LIGHT POLES, AND LOCATION OF COMMUNICATION & ELECTRICAL SURFACE FEATURES ARE SHOWN FOR REFERENCE ONLY. CONTRACTOR SHALL COORDINATE THESE UTILITIES WITH ELECTRICAL DRAWINGS.
4. CONTRACTOR SHALL COORDINATE PLACEMENT OF ALL ELECTRICAL/ COMMUNICATION AND IRRIGATION CONDUITS & HAND HOLES AS SHOWN ON ELECTRICAL AND IRRIGATION DRAWINGS.
5. CONTRACTOR SHALL REFER TO PLUMBING DRAWINGS FOR BUILDING CONNECTIONS.
6. ALL PERFORATED STORM PIPE, STORM UNDERDRAIN, BELL AND SPIGOT ENDS AS CALLED OUT ON THE PLANS SHALL COMPLY WITH ASTM F2306 AND ASTM F2648.
7. ALL MANHOLE STRUCTURE JOINTS WITH PIPES SHALL HAVE MANHOLE WATERSTOP CONSISTING OF A CONNECTOR CONFORMING TO ASTM C923.
8. ALL BUILDING FOOTING UNDERDRAINS SHALL BE RIGID, PERFORATED PVC PIPE.
9. MANHOLE NORTHING AND EASTING IDENTIFIES CENTERLINE OF PIPE AND MANHOLE STRUCTURE. CONTRACTOR SHALL ASSURE THAT MANHOLES WITH ECCENTRIC CONES ARE ADJUSTED AS NECESSARY TO ASSURE THAT THE CASTING IS INSTALLED PER PLAN.
10. FOR STORM CATCH BASINS (CB), REFER TO DETAILS 1A/C502.
11. FOR STORM MANHOLES (MH), REFER TO DETAIL 1B/C502.
12. STORM MANHOLE CASTINGS SHALL BE AS FOLLOWS:
    - STORM MANHOLE CASTINGS AND COVERS SHALL BE EJIW #1040 WITH TYPE "A" SOLID COVER LABELED "STORM".
    - STORM CATCH BASIN CASTINGS AND GRATES IN 6" BARRIER CURB AND GUTTER (PUBLIC STREETS) SHALL BE EJIW #7045 FRAME WITH TYPE M1 GRATE AND T1 BACK.
    - STORM CATCH BASIN CASTINGS AND GRATES IN PAVED SUMP AREAS SHALL BE EJIW #1040 WITH TYPE "M" FLAT GRATE LABELED "STORM".
    - STORM CATCH BASIN CASTINGS AND GRATES IN LANDSCAPED SUMP AREAS SHALL BE EJIW #1000 WITH TYPE "M" GRATE.
16. CONTRACTOR SHALL CLEAN ALL ON-SITE STORM DRAIN PIPE & BASINS PRIOR TO CLOSE OF CONSTRUCTION WITHIN LIMITS OF DISTURBANCE.
17. FOR ALL WATERMAIN VALVES AND VALVE BOXES REFER TO DETAIL 2A/C502, TYPICAL VALVE BOX INSTALLATION.
18. CONTRACTOR WILL FURNISH TAPPING SLEEVE , WITH A FULL-OPEN DOUBLE DISC GATE TAPPING VALVE AND BOX. THE CONTRACTOR WILL INSTALL AND PRESSURE TEST THE SLEEVE.
19. CONTRACTOR SHALL COORDINATE WITH CONTRACTING OFFICER OR CONTRACTING OFFICER'S REPRESENTATIVE PRIOR TO SHUT-DOWN OF ANY WATER LINE.
20. FOR ALL UTILITY CROSSING, 10 FEET OF NO JOINT IN ANY DIRECTION IS REQUIRED.
21. TRENCHING FOR PROPOSED UNDERGROUND UTILITIES SEE DETAILS 3C AND 3D ON SHEET C-502.

PROPOSED UTILITY LEGEND

- WATER LINE
- SANITARY SEWER LINE
- ELECTRIC LINE
- STORM LINE (WITH 6" PERFORATED UNDERDRAIN UNDER PAVEMENT)
- VEGETATED SWALE
- PROPOSED PIV

Know what's below. Call before you dig.

0 20 40 60
SCALE: 1"=20'
N

AECOM

PROJECT

NEW SECURITY FORCES BUILDING
PAYNE BLVD
CHARLOTTE, NORTH CAROLINA 28208

CLIENT

NORTH CAROLINA AIR NATIONAL GUARD-145TH AIRLIFT WING
145th AIRLIFT WING
4930 MINUTEMAN WAY
CHARLOTTE, NORTH CAROLINA 28208

CONSULTANT

AECOM
277 W NATIONWIDE BLVD
COLUMBUS, OHIO 43215
614-464-4500
http://www.aecom.com

CONSULTANTS

REGISTRATION

STATE OF MICHIGAN
JOSE CARLOS HERNANDEZ
CIVIL
No. 6201310139
LICENSED PROFESSIONAL ENGINEER
05/30/2025

KEY PLAN

ISSUE/REVISION

I/R	DATE	DESCRIPTION
	05/30/25	B-3 SUBMITTAL - FINAL

PROJECT NUMBER
60637899
FJRP229030

SHEET TITLE
UTILITY PLAN

SHEET NUMBER
C201

©2016 AECOM Corporation

Last Plotted: 10/13/2025 11:43:06 AM
Filename: C:\Users\michael.lebo\dir\gaecom\acwin\ae - aecom\general - 60637899-af nc ang 145\900_cad_grid\10_cad\civil\c-sheets\c201 utility plan.dwg

Printed on ___% Post-Consumer Recycled Content Paper

08-ARCHITECTURE-A300-BUILDING SECTIONS ARCH E1 30"X42"
Project Management Initials: Designer: MCL Checked: GHF Approved: JRO

ADA SPACES ENLARGED

Scale: 1" = 5'

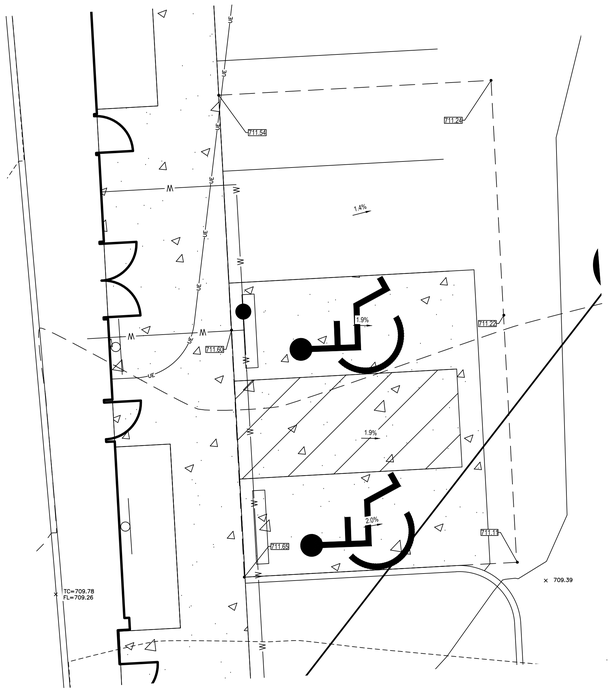

Know what's **below.**
Call before you dig.

SCALE: 1"=5'

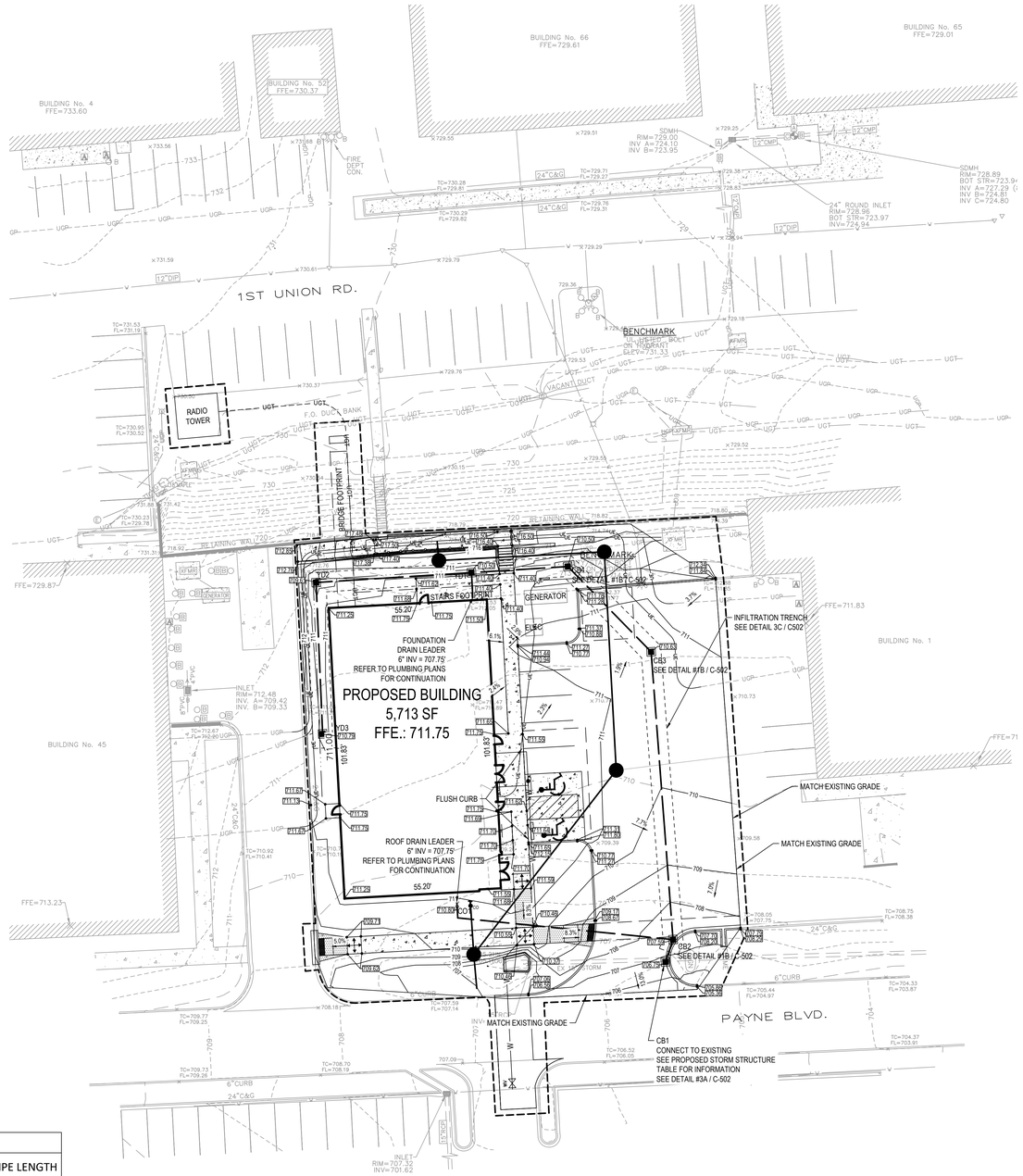

SITE GRADING NOTES

1. ALL SOIL EROSION AND SILT MUST BE CONTROLLED AND CONTAINED ON SITE AND DURING ALL PHASES OF CONSTRUCTION.
2. ALL EARTHWORK AND PAVING OPERATIONS SHALL COMPLY WITH CURRENT NCDOT STANDARDS AND PROJECT SPECIFICATIONS FOR CONSTRUCTION.
3. FROZEN MATERIAL SHALL NOT BE USED AS FILL. FILL SHALL NOT BE PLACED ON FROZEN GROUND.
4. ALL PROPOSED ELEVATIONS WITHIN PAVED AREAS REPRESENT FINISHED GRADE.
5. REFER TO DETAIL SHEETS FOR "POINT OF GRADE" ON CURB & GUTTER.
6. STORM DRAIN RIM ELEVATIONS ARE SHOWN TO FINISHED GRADE. PAVING CONTRACTOR WILL BE RESPONSIBLE FOR ADJUSTING CASTING TO FINISHED PAVEMENT GRADE.
7. ALL EXISTING MANHOLES, GRATES AND UTILITIES CASTINGS TO BE ADJUSTED TO FINISHED GRADE.
8. EXCAVATE TO THE DEPTH OF THE FINAL SUBGRADE ELEVATION TO ALLOW FOR GRADE CHANGES & PLACEMENT OF THE RECOMMENDED PAVEMENT SYSTEM.
9. FINAL SUBGRADE SHALL BE PROOF-ROLLED USING A FULLY LOADED TANDEM TRUCK UNDER THE OBSERVATION OF A GEOTECHNICAL/PAVEMENT ENGINEER. LOOSE OR YIELDING AREAS THAT CANNOT BE MECHANICALLY STABILIZED SHALL BE REMOVED & REPLACED WITH ENGINEERED FILL OR AS DICTATED BY GEOTECHNICAL RECOMMENDATIONS.
10. AGGREGATE BASE, SAND SUBBASE SHALL BE COMPACTED TO A MINIMUM OF 95% OF THE MAXIMUM MODIFIED PROCTOR DRY DENSITY. AGGREGATE BASE, SAND SUBBASE AND SUBGRADE COMPACTION SHALL EXTEND A MINIMUM OF 12" BEYOND THE PAVED EDGE/BACK OF CURB.
11. ALL SUBMITTALS WILL BE SUBMITTED TO AND REVIEWED BY CONTRACTING OFFICER OR CONTRACTING OFFICER'S REPRESENTATIVE.
12. REFER TO SPECIFICATIONS AND LANDSCAPE PLANS FOR SEED TYPES THROUGHOUT THE PROJECT.
13. REFER TO LANDSCAPE PLANS FOR DETAILS OF STAIRS AND SEGMENTAL UNIT RETAINING WALLS.
14. REFER TO LANDSCAPE PLANS FOR PLANTINGS AND PLANTING BED PERIMETERS.
15. REFER TO LANDSCAPE PLANS FOR LOCATIONS AND DETAILS OF SITE AMENITIES.
16. TRENCHING FOR PROPOSED UNDERGROUND UTILITIES SEE DETAILS 3C AND 3D ON SHEET C-502.

LEGEND

PROPOSED CONCRETE SIDEWALK

VEGETATED SWALE

PROPOSED STORM STRUCTURE TABLE

STRUCTURE NAME	TYPE	SIZE	RIM ELEV.	CONNECTION STRUCTURE	INVERTS	PIPE SIZE	PIPE SLOPE	PIPE LENGTH
YD3	YARD DRAIN	48" DIA	710.7800	YD2 DOWNSTREAM	N (OUT): 710.78	12"	1.00%	54 LF
YD2	YARD DRAIN	48" DIA	709.6100	YD3 UPSTREAM	S (IN): 706.24			
				YD1 DOWNSTREAM	E (OUT): 706.24	12"	1.00%	55 LF
YD1	YARD DRAIN	48" DIA	710.3100	YD2 UPSTREAM	W (IN): 705.69			
				BUILDING UPSTREAM	S (IN): 706.29	12"	1.00%	9 LF
				CB4 DOWNSTREAM	E (OUT): 705.69	12"	1.00%	34 LF
CB4	CATCH BASIN	48" DIA	712.5600	YD1 UPSTREAM	W (IN): 705.35			
				CB3 DOWNSTREAM	SE (OUT): 705.35	12"	1.00%	42 LF
CB3	CATCH BASIN	48" DIA	710.6300	CB4 UPSTREAM	NW (IN) 704.93			
				CB2 DOWNSTREAM	S (OUT): 704.93	12"	1.00%	102 LF
CB2	CATCH BASIN	48" DIA	707.5900	CB3 UPSTREAM	N (IN): 703.91			
				CO1 UPSTREAM	W (IN): 705.18	6"	1.72%	100 LF
				CB1 DOWNSTREAM	SW (OUT): 703.91	12"	1.00%	9 LF
CB1	CATCH BASIN	48" DIA	706.7200	CB2 UPSTREAM	NE (IN): 703.83			

Know what's **below.**
Call before you dig.

SCALE: 1"=20'

AECOM

PROJECT

NEW SECURITY FORCES BUILDING
PAYNE BLVD
CHARLOTTE, NORTH CAROLINA 28208

CLIENT

NORTH CAROLINA AIR NATIONAL GUARD-145TH AIRLIFT WING
145th AIRLIFT WING
4930 MINUTEMAN WAY
CHARLOTTE, NORTH CAROLINA 28208

CONSULTANT

AECOM
277 W NATIONWIDE BLVD
COLUMBUS, OHIO 43215
614-464-4500
http://www.aecom.com

CONSULTANTS

REGISTRATION

STATE OF MICHIGAN
JOSE CARLOS HERNANDEZ CIVIL
No. 6201310139
LICENSED PROFESSIONAL ENGINEER
05/30/2025

KEY PLAN

ISSUE/REVISION

I/R	DATE	DESCRIPTION
	05/30/25	B-3 SUBMITTAL - FINAL

PROJECT NUMBER
60637899
FJRP229030

SHEET TITLE
GRADING AND DRAINAGE PLAN

SHEET NUMBER
C301

©2016 AECOM Corporation

Last Plotted: 10/13/2025 11:43:13 AM
Filename: J:\60637899\cad\dwg\arch\civil\sheets\c301 grading and drainage plan.dwg

Printed on ___% Post-Consumer Recycled Content Paper

08-ARCHITECTURE-A300-BUILDING SECTIONS
Project Management Initials:
Designer: MCL Checked: GHF Approved: JRO ARCH E1 30"X42"

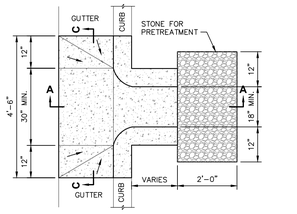

DETAIL A
INLET WITH WINGWALLS AND STONE SPLASH PAD

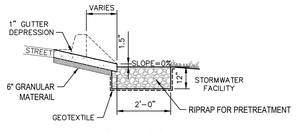

SECTION A-A

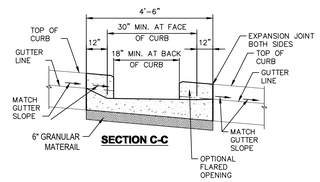

4C | CURB AND GUTTER CONCRETE SPILLWAY
Scale: N.T.S.

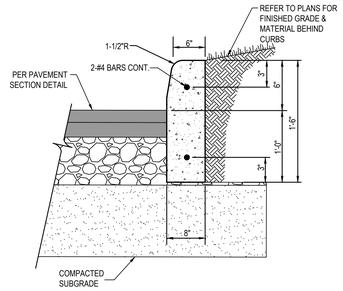

3D | STRAIGHT CONCRETE CURB
Scale: N.T.S.

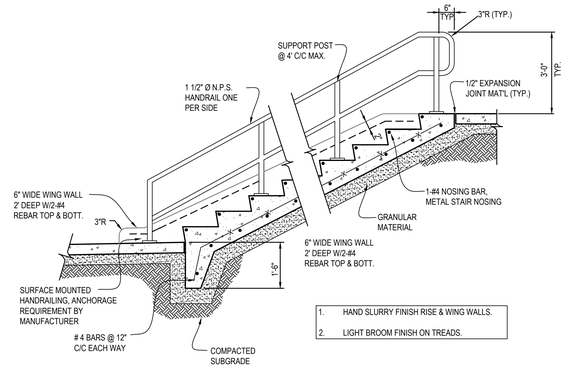

3C | CONCRETE STAIRS WITH HANDRAIL AND WINGWALLS
Scale: N.T.S.

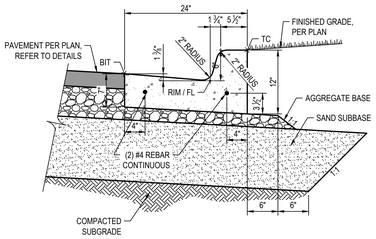

2A | CONCRETE CURB & GUTTER
Scale: N.T.S.

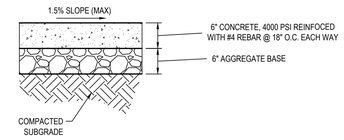

1D | CONCRETE PAVEMENT STANDARD DUTY
Scale: N.T.S.

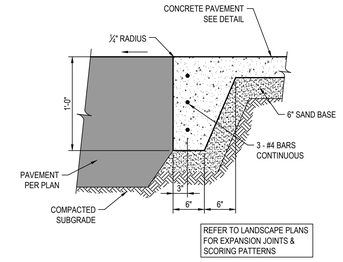

2C | CONCRETE FLUSH TURNED DOWN SIDEWALK
Scale: N.T.S.

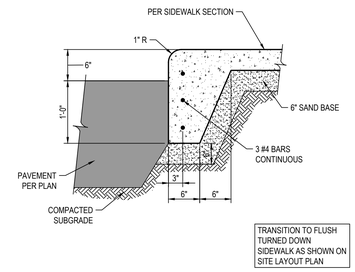

1C | CONCRETE TURNED DOWN SIDEWALK
Scale: N.T.S.

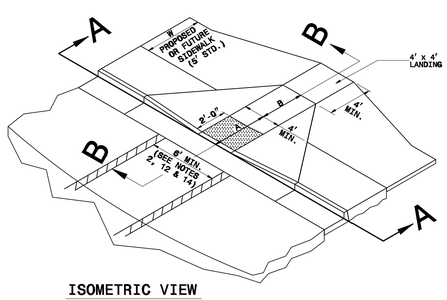

ISOMETRIC VIEW

PAY LIMITS FOR CURB RAMP

NOTES:
1. DETECTABLE WARNING DOMES WILL COVER 2'-0" LENGTH AND FULL WIDTH OF THE RAMP FLOOR AS SHOWN ON THE DETAILS.
2. DETECTABLE WARNING DOMES WILL CONTRAST VISIBILITY WITH ADJOINING SURFACE, EITHER LIGHT-ON-DARK, OR DARK-ON-LIGHT SEQUENCE COVERING THE ENTIRE RAMP.

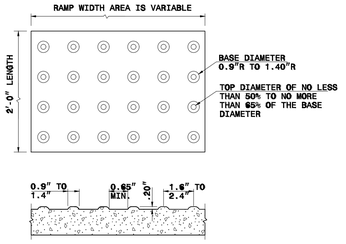

DETECTABLE WARNING DOMES

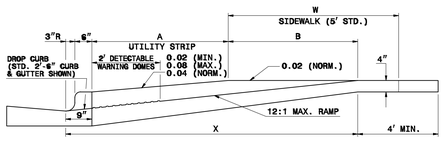

SECTION B-B

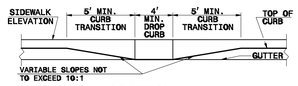

SECTION A-A

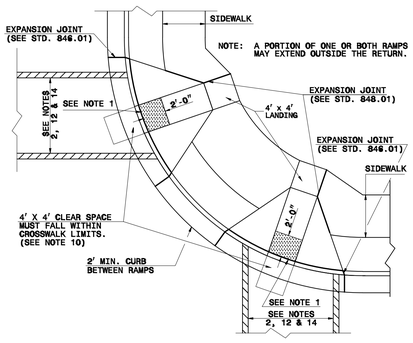

PLAN VIEW
DUAL RAMPS
ANY RADII
(4' MIN. FLOOR WIDTH)

W	A	W+A+9"	X	B
5'	0.0'	5.8'	5.8'	5.0'*
6'	0.0'	6.8'	6.8'	6.0'**
7'	0.0'	7.8'	7.3'	6.5'**
8'	0.0'	8.8'	7.3'	6.5'**
5'	2.0'	7.8'	7.8'	5.0'
5'	2.5'	8.3'	8.1'	4.8'
5'	3.0'	8.8'	8.3'	4.4'
5'	3.5'	9.3'	8.4'	4.1'
5'	4.0'	9.8'	8.5'	3.8'
5'	4.5'	10.3'	8.7'	3.4'
5'	5.0'	10.8'	8.9'	3.1'

B = X-(A+9")
B = DISTANCE FROM FRONT EDGE OF SIDEWALK TO BACK POINT OF 12:1 (8.33%) SLOPE.
* BACK OF SIDEWALK DROP REQUIRED FOR ALL SIDEWALK SLOPES.
** BACK OF SIDEWALK DROP REQUIRED FOR SIDEWALK SLOPES 0.04.

STATE OF NORTH CAROLINA
DEPT. OF TRANSPORTATION
DIVISION OF HIGHWAYS
RALEIGH, N.C.

1-18

ROADWAY STANDARD DRAWING FOR
CURB RAMP
PROPOSED CURB AND GUTTER

SHEET 1 OF 3
848.05

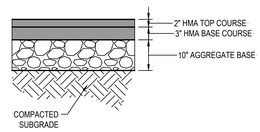

2B | HOT MIX ASPHALT (HMA) PAVEMENT HEAVY DUTY
Scale: N.T.S.

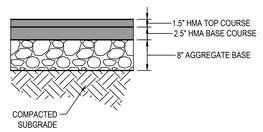

1B | HOT MIX ASPHALT (HMA) STANDARD DUTY
Scale: N.T.S.

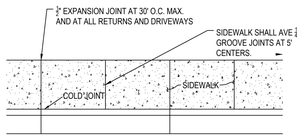

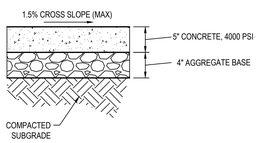

1A | CONCRETE SIDEWALK
Scale: N.T.S.

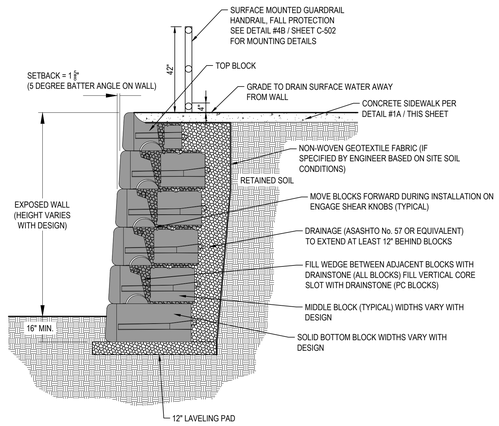

4A | SEGMENTAL BLOCK GRAVITY WALL

AECOM

PROJECT
NEW SECURITY FORCES BUILDING
PAYNE BLVD
CHARLOTTE, NORTH CAROLINA 28208

CLIENT
NORTH CAROLINA AIR NATIONAL GUARD-145TH AIRLIFT WING
145th AIRLIFT WING
4930 MINUTEMAN WAY
CHARLOTTE, NORTH CAROLINA 28208

CONSULTANT
AECOM
277 W NATIONWIDE BLVD
COLUMBUS, OHIO 43215
614-464-4500
http://www.aecom.com

CONSULTANTS

REGISTRATION
STATE OF MICHIGAN
JOSE CARLOS HERNANDEZ
CIVIL
No. 6201310139
LICENSED PROFESSIONAL ENGINEER
05/30/2025

KEY PLAN

ISSUE/REVISION

I/R	DATE	DESCRIPTION
	05/30/25	B-3 SUBMITTAL - FINAL

PROJECT NUMBER
60637899
FJRP229030

SHEET TITLE
DETAILS

SHEET NUMBER
C501

©2016 AECOM Corporation

Last Protect: 10/13/2025 11:43:16 AM
Filename: C:\aecom\workdir\ghf\acdwnfrw - aecomlgencal - 60637899-sf nc.wrg 145\900_cad_grp\10_cad\civil\b-sheets\c501 details.dwg

Printed on % Post-Consumer Recycled Content Paper

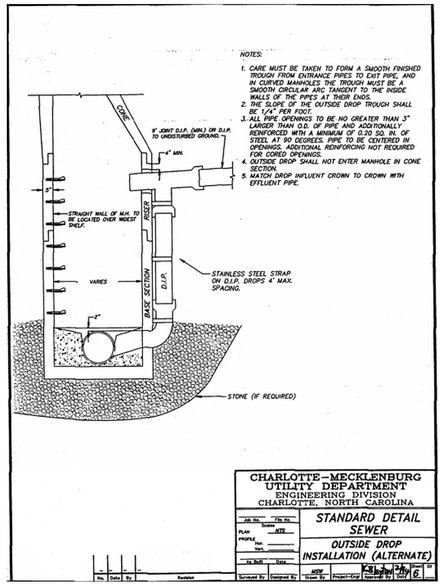

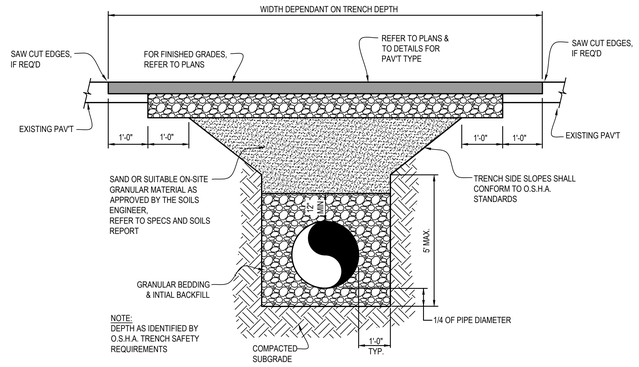

1.- SEE UTILITY CROSSING TABLE ON SHEET C-201 FOR REQUIRED DEPTHS.

3D | TYPICAL UTILITY PIPING TRENCH

Scale: N.T.S.

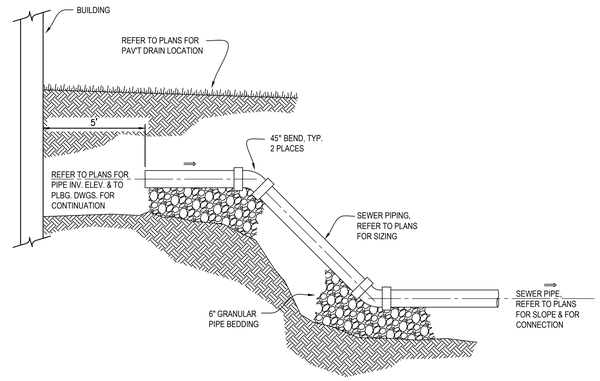

2C | UTILITY PIPE CONNECTION TO BUILDING

Scale: N.T.S.

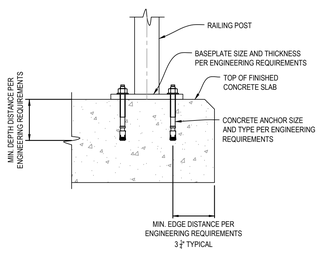

4B | HANDRAIL MOUNTING DETAIL

Scale: N.T.S.

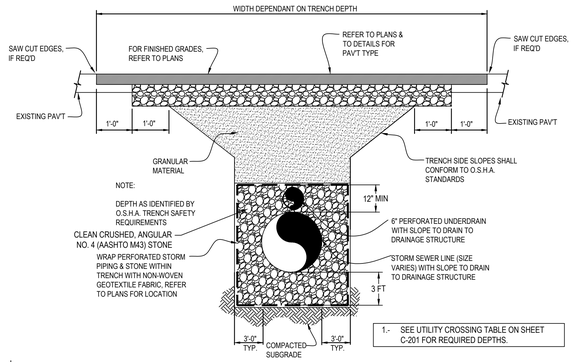

1.- SEE UTILITY CROSSING TABLE ON SHEET C-201 FOR REQUIRED DEPTHS.

3C | STORM SEWER INFILTRATION TRENCH

Scale: N.T.S.

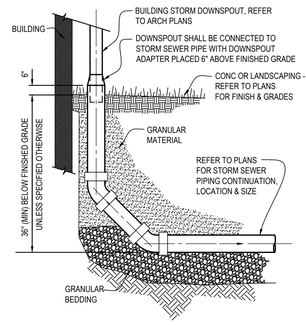

3B | STORM SYSTEM DOWNSPOUT CONNECTION

Scale: N.T.S.

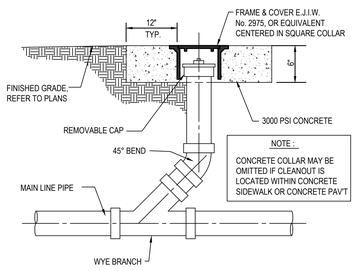

NOTE :-
CONCRETE COLLAR MAY BE OMITTED IF CLEANOUT IS LOCATED WITHIN CONCRETE SIDEWALK OR CONCRETE PAV'T

2B | UTILITY SYSTEM IN-LINE CLEANOUT

Scale: N.T.S.

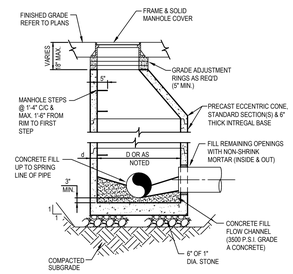

PIPE SIZE	D	d
8" TO 18"	4'-0"	4"
21" TO 24"	5'-0"	5"
27" TO 36"	6'-0"	6"
42" & LARGER	SEE DWG	

FRAME & COVER TABLE:

STRUCTURE TYPE	FRAME & SOLID COVER	LETTER ON COVER
STORM	EJIW #1040 TYPE A, OR	S
SANITARY	NEENAH #R-1764, OR	S
WATER	APPROVED EQUAL	W

1B | STORM SYSTEM MANHOLE

Scale: N.T.S.

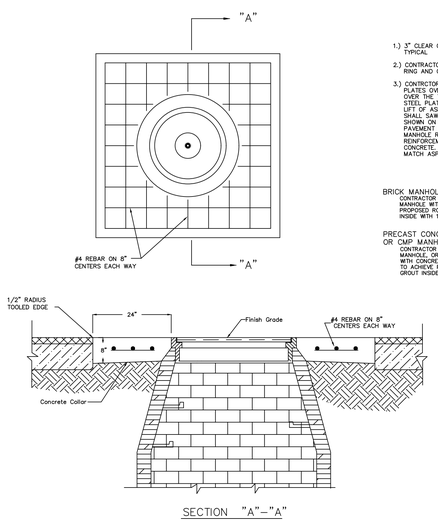

NOTES:

1.) 3" CLEAR COVER ON REINFORCEMENT TYPICAL.

2.) CONTRACTOR SHALL SUPPLY NEW RING AND COVER.

3.) CONTRCTOR SHALL PLACE 1/2" STEEL PLATES OVER MANHOLES AND PAVE OVER THE TOP OF MANHOLE AND STEEL PLATE. UPON PLACEMENT OF FINAL LIFT OF ASPHALT PAVEMENT THE CONTRACTOR SHALL SAWCUT ALONG THE DIMENSIONS SHOWN ON THE PLAN VIEW. REMOVE PAVEMENT INSIDE SAWCUT AREA, ADJUST MANHOLE RING TO GRADE, PLACE REINFORCEMENT STEEL, PLACE, AND FINISH CONCRETE. FINISHED CONCRETE SURFACE TO MATCH ASPHALT AT ALL SAWCUTS.

BRICK MANHOLES:
CONTRACTOR SHALL ADJUST EXISTING BRICK MANHOLE WITH BRICK AS REQUIRED TO ACHIEVE PROPOSED ROADWAY ELEVATION, AND GROUT INSIDE WITH 1/2" OF MORTAR.

PRECAST CONCRETE MANHOLE OR CMP MANHOLE:
CONTRACTOR SHALL ADJUST EXISTING PRECAST MANHOLE, OR CORRAGATED METAL PIPE MANHOLE WITH CONCRETE ADJUSTMENT RINGS, AS REQUIRED TO ACHIEVE PROPOSED ROADWAY ELEVATION, AND GROUT INSIDE WITH 1/2" OF MORTAR.

4A | TYPICAL MANHOLE ADJUSTMENT DETAIL

Scale: N.T.S.

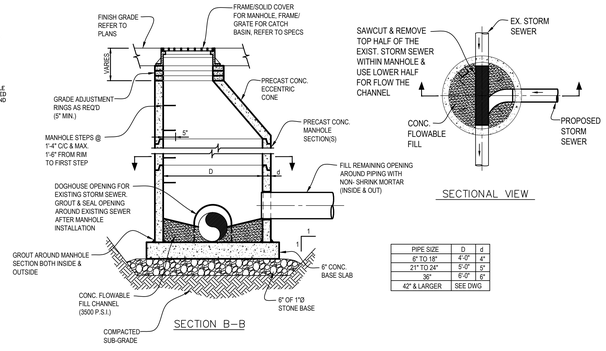

PIPE SIZE	D	d
8" TO 18"	4'-0"	4"
21" TO 24"	5'-0"	5"
36"	6'-0"	6"
42" & LARGER	SEE DWG	

3A | STORM SYSTEM DOGHOUSE STRUCTURE OVER EXISTING SEWER

Scale: N.T.S.

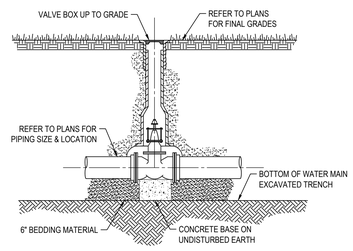

2A | WATER SYSTEM VALVE WITH VALVE BOX

Scale: N.T.S.

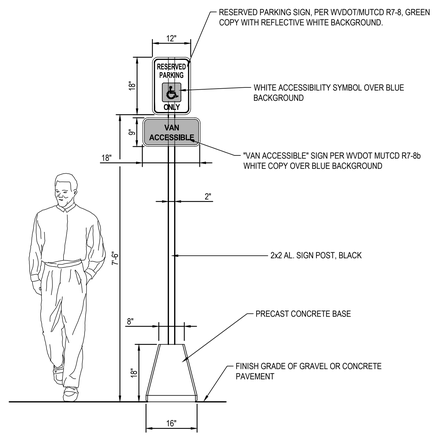

1A | ACCESSIBLE PARKING SIGN WITH PRECAST CONCRETE BASE

Scale: N.T.S.

AECOM

PROJECT

NEW SECURITY FORCES BUILDING
PAYNE BLVD
CHARLOTTE, NORTH CAROLINA 28208

CLIENT

NORTH CAROLINA AIR NATIONAL GUARD-145TH AIRLIFT WING
145th AIRLIFT WING
4930 MINUTEMAN WAY
CHARLOTTE, NORTH CAROLINA 28208

CONSULTANT

AECOM
277 W NATIONWIDE BLVD
COLUMBUS, OHIO 43215
614-464-4500
http://www.aecom.com

CONSULTANTS

REGISTRATION

STATE OF MICHIGAN
JOSE CARLOS HERNANDEZ
CIVIL
No. 6201310139
LICENSED PROFESSIONAL ENGINEER
05/30/2025

KEY PLAN

ISSUE/REVISION

I/R	DATE	DESCRIPTION
	05/30/25	B-3 SUBMITTAL - FINAL

PROJECT NUMBER
60637899
FJRP229030

SHEET TITLE
DETAILS

SHEET NUMBER
C502

Last Plotted: 10/13/2025 11:43:21 AM
Filename: C:\aecomtemp\acadcontent\acecondrive - aecomingeneral - 60637899-ef nc eng 145900_cad_grid10_cad\cnfc-sheets\d301 details.dwg
Printed on ___% Post-Consumer Recycled Content Paper
©2016 AECOM Corporation

ABBREVIATIONS

A

&	AND
@	AT
A/E	ARCHITECT/ENGINEER
AB	ANCHOR BOLT(S)
ABBRV	ABBREVIATION(S)
ABV	ABOVE
ADD'L	ADDITIONAL
ADJ	ADJACENT, ADJUST(ABLE)
AFF	ABOVE FINISHED FLOOR
AFG	ABOVE FINISHED GRADE
AGGR	AGGREGATE
ANCH	ANCHOR(S)
ALT	ALTERNATE(S)(ING)
AL	ALUMINUM
APPROX	APPROXIMATE(LY)
ARCH	ARCHITECT(URAL)
ASPH	ASPHALT
AVG	AVERAGE(S)

B

℄	BUILDING LINE
B/	BOTTOM OF, BELOW
BAL	BALANCE
BC	BOTTOM CHORD
BF	BOTH FACES, BELOW FLOOR
BITUM	BITUMINOUS
BL	BOTTOM LAYER
BLDG	BUILDING
BLK	BLOCK
BLKG	BLOCKING
BM	BEAM
BP	BEARING PLATE
BOT	BOTTOM
B PL	BASEPLATE
BRDG	BRIDGING
BRG	BEARING
BRKT	BRACKET
BSMT	BASEMENT
BT	BENT
BTWN	BETWEEN

C

℄, CL	CENTER LINE
C/C	CENTER TO CENTER
CAIS	CAISSON
CANT	CANTILEVER(ED)
CAP	CAPACITY
CCW	COUNTER CLOCKWISE
CEM	CEMENT
CFS	COLD FORMED STEEL
CGS	CENTER GRAVITY OF STEEL
CIP	CAST IN PLACE
CJ	CONTROL/CONTRACTION JOINT
CLG	CEILING
CLR	CLEAR
CM	CONSTRUCTION MANAGER
CMU	CONCRETE MASONRY UNIT
COL	COLUMN
COMP	COMPRESSION
CPRS	COMPRESSIBLE
CONC	CONCRETE
CONN	CONNECTION
CONSTR	CONSTRUCTION
CONT	CONTINUE(OUS)(ATION)
CONTR	CONTRACTOR(S)
COORD	COORDINATE(S)
CSNK	COUNTERSINK(SUNK)
CTR	CENTER

D

DBL	DOUBLE
DEG, °	DEGREE(S)
DEPR	DEPRESSION
DET	DETAIL(S)
DIA, Ø	DIAMETER
DIAG	DIAGONAL
DIAPH	DIAPHRAGM
DIM	DIMENSION(S)
DK	DECK(S)
DL	DEAD LOAD
DN	DOWN
do	DITTO
DP	DEEP
DWG	DRAWING(S)
DWL	DOWEL(S)

E

E	EAST
(E)	EXISTING
EA	EACH
EE	EACH END
EF	EACH FACE
EJ	EXPANSION JOINT(S)
EL	ELEVATION(S)
ELEC	ELECTRIC(AL)
ELEV	ELEVATOR(S)
EMBED	EMBEDDED, EMBEDMENT
ENCL	ENCLOSE(S)(D)(URE)
ENG	ENGINEER(S)(ING)
EOD	EDGE OF DECK
EOS	EDGE OF SLAB
EQ	EQUAL(S)
EQUIP	EQUIPMENT
ES	EACH SIDE
EW	EACH WAY
EWB	EACH WAY BOTTOM
EWT	EACH WAY TOP
EWTB	EACH WAY TOP AND BOTTOM
EXC	EXCAVATE(ION)
EXP	EXPANSION
EXT	EXTERIOR

F

F/F	FACE TO FACE
FD	FLOOR DRAIN(S)
FDN	FOUNDATION(S)
FF	FAR FACE
FIN	FINISH(ED)(ES)(ING)
FL	FULL LENGTH
FLEX	FLEXIBLE
FLG	FLANGE(S)
FLR	FLOOR(S)
FOS	FACTOR OF SAFETY
FP	FULL PENETRATION
FR	FRAME(D)(S)
FT	FOOT, FEET
FTG	FOOTING(S)
FURN	FURNISH(ED)(ES)
FUT	FUTURE

G

GA	GAGE, GAUGE
GALV	GALVANIZE(D)(S)
GB	GRADE BEAM
GC	GENERAL CONTRACTOR
GEN	GENERAL
GR	GRADE
GRD	GROUND

H

HC	HOLLOW CORE
HD	HEADED
HDG	HOT-DIPPED GALVANIZED
HDR	HEADER
HT	HEIGHT
HK	HOOK
HORIZ	HORIZONTAL
HP	HIGH POINT
HVAC	HEATING/VENTILATING/AIR CONDITIONING

I

ID	INSIDE DIAMETER
IF	INSIDE FACE
IJ	ISOLATION JOINT
IN	INCH(ES)
INCL	INCLUDE(ED)(ING)
INFO	INFORMATION
INSUL	INSULATION
INT	INTERIOR(S)
INV	INVERT

J

JST	JOIST
JT	JOINT

K

K	KIPS
K/F	KIPS PER FOOT
KSF	KIPS PER SQUARE FOOT
KO	KNOCKOUT

L

L	ANGLE
LB	POUND(S)
LEV	LEVEL(ING)
LG	LONG, LENGTH
LL	LIVE LOAD
LLH	LONG LEG HORIZONTAL
LLV	LONG LEG VERTICAL
LOC	LOCATION
LONG	LONGITUDINAL
LP	LOW POINT
LSH	LONG SIDE HORIZONTAL
LT	LEFT
LW	LONG WAY
LWB	LONG WAY BOTTOM
LWGT	LIGHTWEIGHT
LWT	LONG WAY TOP
LWTB	LONG WAY TOP AND BOTTOM

M

MAS	MASONRY
MATL	MATERIAL
MAX	MAXIMUM
MECH	MECHANICAL
MEZZ	MEZZANINE
MFR	MANUFACTURER
MIN	MINIMUM
MISC	MISCELLANEOUS
MK	MARK
MO	MASONRY OPENING
MTL	METAL

N

#, NO.	NUMBER
N	NORTH
(N)	NEW
N/A	NOT APPLICABLE
NF	NEAR FACE
NOM	NOMINAL
NS	NEAR SIDE
NTS	NOT TO SCALE

O

O/O	OUT TO OUT
OA	OVERALL
OC	ON CENTER
OD	OUTSIDE DIAMETER
OF	OUTSIDE FACE
OGL	ON GAGE LINE
OH	OVERHEAD
OPNG	OPENING
OPP	OPPOSITE
OPP HD	OPPOSITE HAND
OSL	OUTSTANDING LEG
OZ	OUNCE

P

#	POUND
PAR	PARALLEL
PC	PRECAST CONCRETE
PE	PROFESSIONAL ENGINEER
PERIM	PERIMETER
PERP	PERPENDICULAR
PL, ℘	PLATE
PLMB	PLUMBING
PLYW	PLYWOOD
PREFAB	PREFABRICATED
PROP	PROPERTY
PSF	POUNDS PER SQ FT
PSI	POUNDS PER SQ IN
PT	POINT
P/T, PTEN	POST-TENSION
PTFE	POLYTETRAFLUOROETHYLENE

Q

QTY	QUANTITY

R

R	RISER
RAD	RADIUS
RD	ROOF DRAIN
RE	RIGHT END
REBAR	REINFORCING BAR
RECT	RECTANGULAR
REF	REFERENCE(D)(S)
REINF	REINFORCING
REL	RELOCATE
REQ'D	REQUIRED
REV	REVISE(D)(ION)
RM	ROOM
RMV	REMOVE
RND	ROUND

S

SC	SLIP CRITICAL
SCHED	SCHEDULE
SCW	SHALL CONFORM WITH
SEC	SECOND
SECT	SECTION
SHT	SHEET
SIM	SIMILAR
SJI	STEEL JOIST INSTITUTE
SL	SLAB
SLV	SLEEVE
SOG	SLAB ON GRADE
SPA	SPACE(S)(ING)
SPEC	SPECIFICATION
SQ	SQUARE
SST	STAINLESS STEEL
STA	STATION
STD	STANDARD
STIFF	STIFFEN(ER)
STIR	STIRRUP
STL	STEEL
STRUCT	STRUCTURE(AL)
SUP	SUPPORT
SUSP	SUSPENDED
SW	SHORT WAY, SWITCH
SWB	SHORT WAY BOTTOM
SWT	SHORT WAY TOP
SWTB	SHORT WAY TOP AND BOTTOM
SYM	SYMMETRICAL

T

T	TREAD
T & B	TOP & BOTTOM
T/	TOP OF
TC	TOP CHORD
TEMP	TEMPERATURE
TEN	TENSION
THK	THICK
THK'N	THICKEN(ED)
TL	TOP LAYER
TOL	TOLERANCE
TOT	TOTAL
TYP	TYPICAL

U

UNO	UNLESS NOTED OTHERWISE
UTIL	UTILITY(IES)

V

V	VENT
VB	VAPOR BARRIER
VERT	VERTICAL
VIF	VERIFY IN FIELD
VOL	VOLUME

W

W/	WITH
W/O	WITHOUT
WD	WOOD
WL	WIND LOAD
WPT	WORKPOINT
WS	WATERSTOP
WT	WEIGHT
WWF	WELDED WIRE FABRIC

X

X	EXTRA STRONG
XX	DOUBLE EXTRA STRONG

Y

YD	YARD

MATERIAL INDICATION

EARTH | GRAVEL | GROUT OR SAND | MASONRY | SOLID OR GROUTED SOLID MASONRY

GRAPHIC SYMBOLS

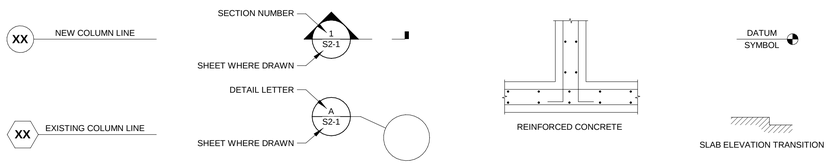

COMPONENTS & CLADDING DESIGN LOADS & CRITERIA

LRFD WIND LOADING (PSF) IN ACCORDANCE WITH IBC (2021), SECTION 1609

MINIMUM ROOF SURFACE PRESSURE (PSF)

AREA	10 sf	20 sf	50 sf	100 sf	200 sf	350 sf	500 sf	1000 sf
Negative Zone 1	-61.1	-57.1	-51.8	-47.7	-43.7	-40.4	-38.4	-38.4
Negative Zone 1'	-35.1	-35.1	-35.1	-35.1	-30.2	-26.3	-23.8	-18.9
Negative Zone 2	-80.6	-75.4	-68.6	-63.4	-58.2	-54.0	-51.4	-51.4
Negative Zone 3	-109.9	-99.5	-85.8	-75.4	-65.1	-56.7	-51.4	-51.4
Positive All Zones	16.0	16.0	16.0	16.0	16.0	16.0	16.0	16.0
Overhang Zone 1 & 1'	-55.3	-54.3	-53	-52	-43.6	-36.8	-32.5	-32.5
Overhang Zone 2	-74.8	-67.9	-58.7	-51.8	-44.9	-39.3	-35.8	-35.8
Overhang Zone 3	-104	-91.9	-75.9	-63.9	-51.8	-42.0	-35.8	-35.8

MINIMUM WALL SURFACE PRESSURE AT h

AREA	10 sf	20 sf	50 sf	100 sf	200 sf	350 sf	500 sf	1000 sf
Negative Zone 4	-38.0	-36.5	-34.4	-32.9	-31.3	-30.1	-29.3	-29.3
Negative Zone 5	-46.8	-43.7	-39.6	-36.5	-33.4	-30.9	-29.3	-29.3
Positive Zone 4 & 5	35.1	33.6	31.5	29.9	28.4	27.1	26.3	26.3

MINIMUM SCREEN WALL SURFACE PRESSURE

AREA	10 sf	20 sf	50 sf	100 sf	200 sf	350 sf	500 sf	1000 sf
CASE A - ROOF ZONE 2	96.6	90.3	82	75.8	69.5	64.5	61.3	61.3
CASE A - ROOF ZONE 3	96.6	90.3	82	75.8	69.5	64.5	61.3	61.3
CASE B - ROOF ZONE 2	-57.0	-54.1	-50.3	-47.4	-44.6	-42.2	-40.7	-40.7
CASE B - ROOF ZONE 3	-65.2	-60.8	-55.1	-50.8	-46.5	-43.0	-40.7	-40.7

MINIMUM HIGH ROOF PARAPET SURFACE PRESSURE

AREA	10 sf	20 sf	50 sf	100 sf	200 sf	350 sf	500 sf	1000 sf
CASE A - ROOF ZONE 2	105.5	98.7	89.7	82.8	76	70.5	66.9	66.9
CASE A - ROOF ZONE 3	135.2	123.1	107.1	95	82.9	73.2	66.9	66.9
CASE B - ROOF ZONE 2	-62.3	-59.2	-55	-51.8	-48.7	-46.1	-44.5	-44.5
CASE B - ROOF ZONE 3	-71.2	-66.5	-60.2	-55.5	-50.8	-47	-44.5	-44.5

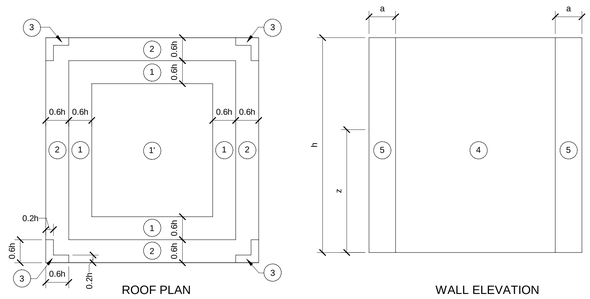

ROOF PLAN

WALL ELEVATION

NOTES:

a: 10 PERCENT OF LEAST HORIZONTAL DIMENSION, BUT NOT LESS THAN 3 FT.
h: MEAN ROOF HEIGHT, IN FEET, EXCEPT THAT EAVE HEIGHT SHALL BE USED FOR Ø ≤ 10°
z: HEIGHT ABOVE GROUND, IN FEET.

N

This drawing has been prepared for the use of AECOM's client and may not be used, reproduced or relied upon by third parties, except as agreed by AECOM and its client, as required by law or for use by governmental reviewing agencies. AECOM accepts no responsibility, and denies any liability whatsoever, to any party that modifies this drawing without AECOM's express written consent. Do not scale this document. All measurements must be obtained from the stated dimensions.

AECOM

PROJECT

NEW SECURITY FORCES BUILDING

PAYNE BLVD.
CHARLOTTE, NORTH CAROLINA 28208

CLIENT

NORTH CAROLINA AIR NATIONAL GUARD - 145TH AIRLIFT WING

145th AIRLIFT WING
4930 MINUTEMAN WAY
CHARLOTTE, NORTH CAROLINA 28208

ARCHITECT/DESIGNER

AECOM

277 W NATIONWIDE BLVD
COLUMBUS, OH 43215
614-464-4500

http://www.aecom.com

CONSULTANTS

REGISTRATION

STATE OF OHIO
ANDREW L KNAPKE
9E-66697
REGISTERED
PROFESSIONAL ENGINEER
5-30-25

ISSUE/REVISION

I/R	DATE	DESCRIPTION
	05/30/2025	B-3 SUBMITTAL - FINAL

PROJECT NUMBER

60637899
FJRP229030

SHEET TITLE

ABBREVIATIONS, LEGENDS, & SYMBOLS

SHEET NUMBER

S001

©2023 AECOM Corporation

ARCH E1 30"x42" Approved: AK Checked: PA Designer: AA Project Management Initials: MR

Last Plotted: 5/20/2025 4:19:49 PM
Filename: BM-300-BP-AABER (USA) 60637899-SPNCANGUARD60637899_SF-NC ANG_R21_S-H

Printed on ___% Post-Consumer Recycled Content Paper

ARCH E1 30"x42"
Approved: AK
Checked: PA
Designer: AA
Project Management Initials: MR

GENERAL CONDITIONS

1. GOVERNING BUILDING CODE: UFC 3-301-01 DATED 10/2/2023 AND INTERNATIONAL BUILDING CODE (IBC), 2021 EDITION.

2. COORDINATE WITH ALL DRAWINGS FOR PERTINENT INFORMATION RELATED TO THE STRUCTURAL WORK. ALL CHANGES TO THE STRUCTURAL SYSTEMS SHALL BE RE-DESIGNED BY A PROFESSIONAL ENGINEER AT NO COST TO THE OWNER OR A/E AND SUBMITTED TO THE CONTRACTING OFFICER FOR REVIEW. SUBMITTAL SHALL BE REVIEWED AND ACKNOWLEDGED IN WRITING BY THE CONTRACTING OFFICER BEFORE BEGINNING CONSTRUCTION.

3. EQUIPMENT FRAMING LOADS, OPENINGS AND STRUCTURE IN ANY WAY RELATED TO HVAC, PLUMBING, PROCESS, ELECTRICAL, ELEVATOR, OR ESCALATOR REQUIREMENTS ARE SHOWN FOR BIDDING PURPOSES ONLY. OBTAIN APPROVAL OF THE PERTINENT TRADES BEFORE PROCEEDING WITH SUCH PORTION OF THE WORK. EXCESS COST RELATED TO VARIATION IN THESE REQUIREMENTS SHALL BE BORNE BY THE APPROPRIATE CONTRACTOR.

4. IT IS SOLELY THE CONTRACTOR'S RESPONSIBILITY TO DETERMINE THE ERECTION PROCEDURE AND SEQUENCE TO ENSURE THE SAFETY OF THE BUILDING AND ITS COMPONENT PARTS DURING ERECTION. THIS INCLUDES, BUT IS NOT LIMITED TO, THE ADDITION OF WHATEVER TEMPORARY BRACING, GUYS OR TIE-DOWNS MAY BE NECESSARY.

5. THE STRUCTURE HAS BEEN DESIGNED FOR THE UNIFORM LOADS INDICATED IN ADDITION TO THE CONCENTRATED LOADS REQUIRED BY THE BUILDING CODE. THE STRUCTURAL DESIGN IS BASED SOLELY ON THE BUILDING IN ITS COMPLETED STATE. CONTRACTORS AND THEIR SUB-CONTRACTORS SHALL TAKE WHATEVER PRECAUTIONS ARE NECESSARY TO WITHSTAND ALL HORIZONTAL AND VERTICAL LOADINGS THAT MAY BE ENCOUNTERED DURING CONSTRUCTION PRIOR TO COMPLETION OF THE BUILDING. SUCH CONSTRUCTION LOADINGS INCLUDE (BUT ARE NOT LIMITED TO) LOADS FROM CRANES, LIFTS, DOLLIES, AND HOISTS. THE CONTRACTOR IS SOLELY RESPONSIBLE FOR THE EVALUATION OF THE IMPACT OF SUCH LOADS ON THE STRUCTURE AND PROVIDING TEMPORARY SHORING, BRACING, AND REINFORCEMENT AS REQUIRED.

6. SEE THE ARCHITECTURAL DRAWINGS FOR ALL DIMENSIONS NOT SHOWN ON THE STRUCTURAL DRAWINGS. ALL DIMENSIONS AND ELEVATIONS SHOWN ON THE STRUCTURAL DRAWINGS SHALL BE VERIFIED BY THE CONTRACTOR AND SHALL CONFORM TO THOSE SHOWN ON THE ARCHITECTURAL DRAWINGS. REPORT ALL DISCREPANCIES TO THE CONTRACTING OFFICER FOR RESOLUTION BEFORE PROCEEDING.

7. FIELD VERIFY ALL EXISTING DIMENSIONS WHICH AFFECT THE NEW CONSTRUCTION PRIOR TO FINAL DETAILING AND FABRICATION OF NEW STRUCTURAL ELEMENTS.

8. THE CONTRACTOR SHALL SUPPORT, BRACE AND SECURE EXISTING STRUCTURES AS REQUIRED. THE CONTRACTOR IS SOLELY RESPONSIBLE FOR THE SAFETY OF EXISTING STRUCTURES DURING CONSTRUCTION.

9. CONTRACTOR SHALL FURNISH, INSTALL, AND VERIFY SEISMIC BRACING, RESTRAINT, AND OTHER SEISMIC REQUIREMENTS FOR ALL DESIGNATED SEISMIC SYSTEMS (DSS) AND NON-STRUCTURAL COMPONENTS IN ACCORDANCE WITH IBC, ASCE 7, AND UFC 3-301-1. SEE SPECIAL INSPECTIONS, PART OF THE PROJECT SPECIFICATIONS, FOR MORE INFORMATION.

STRUCTURAL DESIGN LOADS

1. DESIGN LIVE LOADS (INCLUDING PARTITION LOAD):
   A. FIRST & SECOND FLOOR UNLESS NOTED OTHERWISE = 100 PSF
   B. SECOND FLOOR OUTDOOR MECH AREA = 100 PSF
   C. LIVE LOAD REDUCTION:
      a. LIVE LOAD REDUCTIONS ARE COMPUTED IN ACCORDANCE WITH THE BUILDING CODE.

1. DESIGN CONSTRUCTION LIVE LOAD:
   A. CONCRETE FLOORS ON METAL DECK = 20 PSF
      a. BULK DUMPING OF CONCRETE USING BUCKETS, CHUTES, OR HANDCARTS, OR THE USE OF MOTORIZED FINISHING EQUIPMENT MAY EXCEED THE ASSUMED LIVE LOAD. CONTRACTOR SHALL PROVIDE MEANS AND METHODS OF CONSTRUCTION THAT ENSURE THE CONSTRUCTION LIVE LOAD IS NOT EXCEEDED.

2. DESIGN ROOF LIVE LOAD:
   A. MINIMUM ROOF LIVE LOAD USED IN DESIGN = 25 PSF
   B. ROOF LIVE LOADS ARE NON-REDUCIBLE.

3. DESIGN SNOW LOAD AND SNOW DRIFTING SHALL CONFORM WITH THE BUILDING CODE. SNOW LOAD DESIGN PARAMETERS ARE AS FOLLOWS:
   A. GROUND SNOW LOAD (Pg) = 10 PSF
   B. SNOW EXPOSURE FACTOR (Ce) = 1.2
   C. SNOW THERMAL FACTOR (Ct) = 1.0
   D. SNOW LOAD IMPORTANCE FACTOR (Is) = 1.2
   E. BALANCED SNOW LOAD = 10.1 PSF
   F. RAIN ON SNOW SURCHARGE = 5.0 PSF
   G. MINIMUM SNOW LOAD FOR LOW SLOPE ROOFS (Pm) = 12.0 PSF
   H. ROOF SNOW LOAD:
      a. UNIFORM FLAT LOAD (BALANCED + RAIN SURCHARGE) = 15.1 PSF
      b. WHERE DRIFTING OCCURS = 12.0 PSF + DRIFTING

1. DESIGN DEAD LOADS:
   A. BUILDING COMPONENTS = SELFWEIGHT
   B. HUNG LOAD ALLOWANCE = 10 PSF (TYPICAL)

2. DESIGN RAIN LOADS:
   A. DESIGN RAINFALL INTENSITY = 6.58 IN/HR
   B. DESIGN RAIN LOAD = 21 PSF

3. WIND DESIGN SHALL CONFORM WITH THE BUILDING CODE. WIND DESIGN PARAMETERS ARE AS FOLLOWS:
   A. ULTIMATE DESIGN WIND SPEED (V_{ult}), (3 SECOND GUST) = 124 MPH
   B. NOMINAL DESIGN WIND SPEED (V_{asd}), 50-YR WIND = 86 MPH
   C. RISK CATEGORY = IV
   D. WIND EXPOSURE CATEGORY = EXPOSURE C
   E. INTERNAL PRESSURE COEFFICIENT = ±0.18
   F. SEE SCHEMATIC DRAWING AND TABLE ON SHEET S001 FOR COMPONENTS AND CLADDING LOAD CRITERIA IN ACCORDANCE WITH THE BUILDING CODE. ARCHITECTURAL AND STRUCTURAL COMPONENTS SHALL CONFORM WITH THE BUILDING CODE AND ASCE 7 FOR COMPONENTS AND CLADDING DESIGN FOR EXPOSURE C.

4. SEISMIC DESIGN SHALL CONFORM WITH SECTION 1613 OF THE BUILDING CODE. SEISMIC DESIGN PARAMETERS ARE AS FOLLOWS:
   A. SOIL SITE CLASS = D
   B. MAPPED SPECTRAL RESPONSE ACCELERATION:
      a. S_S = 20.30%
      b. S_1 = 8.30%
   C. DESIGN SPECTRAL RESPONSE ACCELERATION:
      a. S_{DS} = 21.60%
      b. S_{D1} = 13.20%
   D. BUILDING RISK CATEGORY = IV
   E. SEISMIC DESIGN CATEGORY = C
   F. SEISMIC RESPONSE COEFFICIENT (Cs) = 0.108
   G. BASIC SEISMIC FORCE RESISTING SYSTEM:
      a. LATERAL SYSTEM = STEEL SYSTEMS NOT SPECIFICALLY DETAILED FOR SEISMIC RESISTANCE & ORDINARY REINFORCED CONCRETE SHEAR WALLS.
      b. RESPONSE MODIFICATION FACTOR (R) = 3
      c. DEFLECTION AMPLIFICATION FACTOR (Cd) = 3
   H. DESIGN BASE SHEAR:
      a. NORTH-SOUTH = 105.0 KIPS
      b. EAST-WEST = 105.0 KIPS
   I. DESIGN BY EQUIVALENT LATERAL FORCE PROCEDURE
   J. ATTACHMENT OF ARCHITECTURAL, MECHANICAL, ELECTRICAL AND PROCESS SYSTEMS COMPONENTS TO COMPLY WITH THE BUILDING CODE AND ASCE 7.

5. LATERAL FORCE RESISTING SYSTEM DESCRIPTION:
   A. LATERAL FORCE RESISTANCE AND STABILITY OF THE BUILDING IN THE COMPLETED STRUCTURE IS PROVIDED BY VERTICAL STEEL BRACED FRAMES AND REINFORCED CONCRETE SHEAR WALLS IN EACH ORTHOGONAL DIRECTION (SEE PLAN SHEETS FOR LOCATIONS). THE COMPOSITE METAL DECK, CONCRETE TOPPING SLABS, AND METAL ROOF DECK SERVE AS HORIZONTAL DIAPHRAGMS THAT DISTRIBUTE LATERAL WIND AND SEISMIC FORCES HORIZONTALLY TO THE VERTICAL BRACED FRAMES AND REINFORCED CONCRETE SHEAR WALLS. BOTH THE BRACES AND SHEAR WALLS CARRY THE APPLIED LOADS TO THE BUILDING FOUNDATION.

FOUNDATIONS, EXCAVATION AND BACKFILL

1. FOUNDATIONS HAVE BEEN DESIGNED IN ACCORDANCE WITH THE SUBSURFACE INVESTIGATION REPORT BY 'PSI - INTERTEK' DATED MARCH 16, 2023. THE CONTRACTOR SHALL BECOME FAMILIAR WITH THE SURVEY AND THE SUBSURFACE INVESTIGATION REPORT PRIOR TO BIDDING AND BEFORE BEGINNING CONSTRUCTION.

2. THE SUBSURFACE INVESTIGATION IS FOR INFORMATIONAL PURPOSES ONLY AND SHALL NOT BE CONSIDERED PART OF THE CONTRACT DOCUMENTS. FURTHERMORE, NO WARRANTY IS MADE BY THE OWNER WITH REGARD TO COMPLETENESS AND ACCURACY OF THE SUBSURFACE INVESTIGATION DATA, SOIL TEST DATA, STATEMENTS AND INTERPRETATIONS GIVEN IN THE REPORT.

3. NOTIFY THECONTRACTING OFFICER AS SOON AS POSSIBLE OF ANY UNUSUAL SOIL CONDITIONS OR SOIL CONDITIONS AT VARIANCE WITH TEST BORINGS, SUCH AS UNEXPECTED SPRING OR SEEPAGE WATER, MATERIAL DIFFERING FROM TEST BORINGS OR SOIL OF QUESTIONABLE BEARING CAPACITY.

4. SET FOUNDATIONS AT THE ELEVATIONS SHOWN ON THE DRAWINGS ON FIRM SUBGRADE PREPARED PER THE EARTHWORK SPECIFICATIONS. VERIFY THAT EACH FOOTING PLACED IS BEARING ON MATERIAL WITH THE DESIGN BEARING CAPACITY. FOUNDATION DESIGN BEARING CAPACITY, PER THE SUBSURFACE INVESTIGATIVE REPORT = 2,000 PSF.

5. MINIMUM FROST DEPTH BELOW FINISHED GRADE = 18".

6. THE CONTRACTOR SHALL BE RESPONSIBLE FOR THE DESIGN, INSTALLATION AND FINAL CLEARANCE OF ALL REQUIRED NEEDLING, UNDERPINNING, SHORING OR BRACING OF EXISTING STRUCTURES.

7. BACKFILL BEHIND WALLS:
   A. BACKFILL AGAINST BOTH SIDES OF WALLS EQUALLY UNTIL THE LOWER ELEVATION IS ATTAINED.

8. BUILDING EXCAVATION AND COMPACTION:
   A. CARE SHALL BE TAKEN TO NOT DISTURB THE BOTTOM OF THE EXCAVATION. EXCAVATION TO FINAL GRADE SHALL NOT BE MADE UNTIL JUST PRIOR TO PLACING CONCRETE.
   B. PLACE BACKFILL AND FILL IN LIFTS OF 8" MAXIMUM LOOSE DEPTH. COMPACT EACH LIFT WITH A POWER VIBRATING COMPACTOR OR SIMILAR EQUIPMENT TO ENSURE MAXIMUM COMPACTION OF THE MATERIAL.
   C. FILL COMPACTION:
      a. COMPACT COHESIVE MATERIAL FILL TO 98% OF MAXIMUM DENSITY ACCORDING TO ASTM D698.
      b. COMPACT COHESIONLESS MATERIAL FILL FOR DRAINAGE TO 98% OF MAXIMUM DENSITY ACCORDING TO ASTM D-4253 AND D-4254.
   D. SETTLEMENT OR WASHING OUT THAT OCCURS IN GRADED OR BACKFILLED AREAS PRIOR TO ACCEPTANCE OF THE WORK SHALL BE REPAIRED AND GRADES RE-ESTABLISHED TO THE REQUIRED ELEVATIONS AND SLOPES.
   E. ENGINEERED FILL UNDER FOOTINGS AND FLOOR SLAB:
      a. SLAB ON GRADE: SLABS SHALL BE UNDERLAIN BY A MINIMUM OF 4 INCHES OF COMPACTED AGGREGATE BASE COURSE MATERIAL. EXPANSIVE PLASTIC SILT SOILS CURRENTLY PRESENT ON SITE SHALL BE REMOVED AND REPLACED WITH LOW PLASTICITY STRUCTURAL FILL TO A DEPTH OF TWO FEET BELOW THE SLAB. IT IS EXPECTED THAT THE SOIL UNDERNEATH THE ENTIRETY OF THE SLAB AREA WILL NEED TO BE EITHER FILLED WITH ENGINEERED FILL TO ACHIEVE THE REQUIRED FINISEHED FLOOR ELEVATION AND/OR OVEREXCAVATED TO REPLACE EXPANSIVE SOILS.
      b. COLUMN AND WALL FOUNDATIONS: DUE TO THE PRESENCE OF POTENTIALLY EXPANSIVE SOILS, INSPECTION OF ALL FOUNDATION EXCAVATIONS WILL BE REQUIRED TO DETERMINE IF THESE MATERIALS ARE PRESENT AT OR WITHIN TWO FEET OF THE BEARING ELEVATION. IT IS EXPECTED THAT EXPANSIVE SOILS WILL BE FOUND WITHIN TWO FEET OF THE BEARING LEVEL OF FOUNDATIONS AT AND TO THE WEST OF GRIDLINE B. THE EXPANSIVE SOILS SHOULD BE REMOVED AND REPLACED WITH LOW-PLASTICITY FILL TO A DEPTH OF TWO FEET BELOW THE FOOTING. THE REPLACEMENT MATERIAL SHOULD BE SILTY SAND, LOW PLASTICITY SILT, LEAN CLAY, NON-EXCAVATABLE FLOWABLE FILL OR LEAN CONCRETE. SEE SUBSURFACE INVESTIGATION REPORT FOR MORE INFORMATION.
      c. THE ABOVE SHALL BE TAKEN AS GUIDANCE FOR THE CONTRACTOR'S BASE BID. ACTUAL CONTRACT VALUE SHALL BE ADJUSTED BASED ON UNIT PRICES ESTABLISHED PER SPECIFICATIONS.

9. SEE CIVIL DRAWINGS FOR ADDITIONAL EARTHWORK REQUIREMENTS.

CAST-IN-PLACE CONCRETE

1. CAST-IN-PLACE CONCRETE WORK SHALL CONFORM TO THE PROJECT MANUAL AND LATEST AMERICAN CONCRETE INSTITUTE CODES AND STANDARDS, INCLUDING, BUT NOT LIMITED TO, ACI 117, ACI 301, ACI 315 AND ACI 318.

2. MATERIALS AND PRODUCTS:
   A. BAR REINFORCING STEEL: DOMESTIC DEFORMED BILLET STEEL CONFORMING TO ASTM A615, GRADE 60
   B. WELDED WIRE FABRIC: ASTM A-185, DELIVERED IN FLAT SHEETS
   C. CONCRETE:
      a. CONCRETE SHALL HAVE THE FOLLOWING MINIMUM COMPRESSIVE STRENGTHS AT 28 DAYS (f'c):
         - 4000 PSI FOR ALL CONCRETE UNLESS SPECIFICALLY NOTED OTHERWISE
         - 4000 PSI FOR FOOTINGS AND GRADE BEAMS NOT EXPOSED TO WEATHER
         - 5000 PSI FOR CONCRETE EXPOSED TO WEATHER
         - 1500 PSI FOR LEAN CONCRETE FILL
      b. PROVIDE ENTRAINED AIR IN CONCRETE EXPOSED TO WEATHER OR WATER

3. CONTRACTION AND CONSTRUCTION JOINTS:
   A. CONCRETE FOUNDATIONS, BEAMS, SLABS AND WALLS:
      a. BEAMS AND SLABS SHALL BE CAST MONOLITHICALLY, EXCEPT FOR REQUIRED CONTRACTION/CONSTRUCTION JOINTS SHOWN ON THE DRAWINGS.
      b. PROVIDE VERTICAL CONTRACTION/CONSTRUCTION JOINTS IN SLABS AND HORIZONTAL CONTRACTION/CONSTRUCTION JOINTS IN WALLS AS SHOWN ON THE DRAWINGS.
   B. CONSTRUCTION JOINTS:
      - WHERE CONSTRUCTION JOINTS ARE REQUIRED BUT ARE NOT INDICATED ON THE DRAWINGS, THEY SHALL BE LOCATED AT THE MID-SPAN OF BEAMS, SLABS AND WALLS.
      - AT LEAST 48 HOURS SHALL ELAPSE BETWEEN CASTING OF ADJOINING UNITS AT A CONSTRUCTION JOINT.
      - UNLESS NOTED OTHERWISE OR SHOWN ON THE DRAWINGS, PROVIDE A CONTINUOUS SHEAR KEY IN SLABS AND WALLS, AND A MINIMUM OF TWO (2) CONTINUOUS HORIZONTAL KEYS IN BEAMS AND EACH JOIST AT CONSTRUCTION JOINTS. THE MINIMUM KEY SIZE SHALL BE 1 1/2" DEEP X 1/3 THE DEPTH OR WIDTH OF THE MEMBER.
      - REINFORCEMENT SHALL BE CONTINUOUS ACROSS CONSTRUCTION JOINTS UNLESS DETAILED OTHERWISE ON THE DRAWINGS.
      - CONSTRUCTION JOINTS BELOW GRADE SHALL HAVE WATERSTOPS UNLESS BOTH SIDES OF THE JOINT ARE EXPOSED TO EARTH.
      - HARDENED CONCRETE OF CONSTRUCTION JOINTS SHALL BE THOROUGHLY COATED WITH A BONDING AGENT (SIKA ARMATEC 110 OR EQUAL).
      - JOINT LOCATIONS SHALL BE SUBMITTED WITH THE ASSOCIATED REINFORCING STEEL SHOP DRAWINGS AND ARE SUBJECT TO REVIEW BY THE CONTRACTING OFFICER.
      - CONTRACTOR SHALL SUBMIT ALTERNATE AND ADDITIONAL CONSTRUCTION JOINT LOCATIONS AND DETAILS TO THE CONTRACTING OFFICER FOR APPROVAL PRIOR TO CONSTRUCTION.
   d. REFERENCE ACI 302 FOR GUIDELINES AND ADDITIONAL INFORMATION.
   B. CONCRETE SLABS ON METAL DECK
      a. COMPOSITE CONCRETE SLABS ON STEEL DECK, SUPPORTED BY STEEL BEAMS AND GIRDERS
         - CONSTRUCTION JOINTS PERPENDICULAR TO GIRDERS SHALL BE PLACED MID-WAY BETWEEN BEAMS NEAREST TO THE COLUMN CENTERLINE
         - CONSTRUCTION JOINTS PARALLEL TO GIRDERS SHALL BE PLACED FOUR TO SIX FEET FROM THE GIRDER CENTERLINE. THE GIRDER CLOSEST TO THE CONSTRUCTION JOINT SHALL NOT BE INCLUDED IN THE POUR.

4. DOWELS IN FOOTINGS TO MATCH VERTICAL COLUMN AND WALL REINFORCING UNLESS SHOWN OTHERWISE.

5. COMPLY WITH THE ARCHITECTURAL DRAWINGS FOR LOCATION AND EXTENT OF SPECIAL FINISHES OR TREATMENTS TO EXPOSED CONCRETE.

6. PROVIDE 3/4" CHAMFERS ON EXPOSED CORNERS OF COLUMNS, BEAMS AND WALLS UNLESS OTHERWISE INDICATED ON THE ARCHITECTURAL DRAWINGS. MINIMUM CLEARANCES FOR REINFORCING STEEL SHALL CONFORM WITH THE TYPICAL REINFORCING BAR CLEARANCE TABLE.

CAST-IN-PLACE CONCRETE (CONTINUED)

7. CONCRETE SLABS PLACED ON UNSHORED STEEL FRAMING:
   A. CAST SLABS TO WITHIN ±3/8" OF THE SPECIFIED TOP OF SLAB ELEVATION.
   B. FLOOR THICKNESS TOLERANCE SHALL BE +1 1/4" AND -1/4".
   C. STEEL FRAMING IS DESIGNED TO HAVE A NET DOWNWARD DEFLECTION AFTER CONCRETE PLACEMENT (CAMBERED BEAMS ARE SOMEWHAT UNDERCAMBERED).
   D. CONTRACTOR WILL NOT BE PAID FOR ADDITIONAL CONCRETE REQUIRED DUE TO THE DEFLECTION OF UNSHORED FRAMING AND DECK.

8. EMBEDDED ITEMS, SLEEVES, SLAB DEPRESSIONS, OPENINGS, ETC:
   A. THE CONTRACTOR SHALL REVIEW ALL DRAWINGS FOR SIZE AND LOCATION OF EMBEDDED ITEMS, SLEEVES, SLAB DEPRESSIONS, OPENINGS, ETC. REQUIRED BY OTHER TRADES. RECONCILE THEIR EXACT SIZES AND LOCATIONS BEFORE PROCEEDING WITH THE WORK.
   B. ALL ITEMS SHALL BE FURNISHED AND INSTALLED PRIOR TO PLACEMENT OF CONCRETE.
   C. SECURE THE APPROVAL OF THE STRUCTURAL ENGINEER PRIOR TO PLACING OPENINGS NOT SHOWN ON THE STRUCTURAL DRAWINGS.
   D. DO NOT CORE DRILL THROUGH BEAMS, JOISTS, GIRDERS, AND WALLS.
   E. NO CONDUIT SHALL BE PLACED IN CONCRETE SLABS OR BEAMS UNLESS SPECIFICALLY SHOWN ON THE STRUCTURAL DRAWINGS.

9. REINFORCING:
   A. FURNISH (3) TONS OF #5 REINFORCING BARS DELIVERED TO THE JOB SITE IN STANDARD LENGTHS TO BE FABRICATED AND PLACED AS DIRECTED BY THE CONTRACTING OFFICER. UNUSED MATERIAL SHALL BE REMOVED AND CREDITED TO THE PROJECT.
   B. WHERE BAR LENGTHS ARE GIVEN ON THE DRAWINGS, THE LENGTH OF ANY HOOK, IF REQUIRED, IS NOT INCLUDED. USE STANDARD 90° BAR HOOK UNLESS NOTED OTHERWISE.
   C. UNLESS INDICATED OTHERWISE, WELDING OF REINFORCING IS NOT PERMITTED. WHERE WELDING IS INDICATED, PROVIDE ASTM A706 REINFORCING STEEL WITH E80XX OR BETTER WELDING ELECTRODES.
   D. MINIMUM REINFORCING:
      a. PROVIDE MACROFIBER IN ALL SLABS ON GRADE AT A DOSAGE RATE OF 3.0 TO 3.5 POUNDS PER CUBIC YARD, UNLESS NOTED OTHERWISE.
      b. PROVIDE 6X6-W1.4XW1.4 WELDED WIRE FABRIC IN ALL TOPPING SLABS, UNLESS NOTED OTHERWISE.
      c. PROVIDE REINFORCING IN CONCRETE WALLS AS FOLLOWS, UNLESS NOTED OTHERWISE:
         - 6" AND 8" THICK WALLS: #4 @ 12" HORIZONTAL AND #4 @ 18" VERTICAL MID-DEPTH OF WALL
         - 10" AND 12" THICK WALLS: #4 @ 16" HORIZONTAL EACH FACE AND #4 @ 18" VERTICAL EACH FACE
   E. LAP/SPLICE:
      a. REINFORCING BAR LAP SPLICES AND ANCHORAGE LENGTHS SHALL CONFORM WITH TABLE #1, "MINIMUM LAP SPLICE AND ANCHORAGE DIMENSION TABLE".
      b. LAP WELDED WIRE FABRIC 1 SPACE (2 CROSS WIRES) + 2" AT EDGES AND ENDS OF SHEETS.
      c. WHERE REINFORCING IS SHOWN THROUGH CONSTRUCTION JOINTS, MECHANICAL BAR SPLICE DEVICES MAY BE USED.
   F. REINFORCING BAR SUPPORT:
      a. DETAIL AND PROVIDE REINFORCING BARS AND SUPPORT REQUIRED FOR PROPER SUPPORT OF PRINCIPAL REINFORCING WHETHER OR NOT THEY ARE INDICATED ON THE DRAWINGS. MINIMUM BAR SIZE SHALL BE #4 AND MAXIMUM SPACING SHALL BE 36" ON CENTER FOR REINFORCING THAT SUPPORTS PRIMARY REINFORCING. DO NOT USE WELDED WIRE FABRIC FOR THE SUPPORT OF PRINCIPAL REINFORCING.
      b. PROVIDE A MINIMUM OF TWO (2) #4 TOP REINFORCING BARS IN BEAMS WHERE NO OTHER TOP BARS ARE AVAILABLE FOR SUPPORTING STIRRUPS. SPANDREL AND EDGE BEAMS SHALL HAVE A MINIMUM OF TWO (2) #4 TOP REINFORCING BARS AND CLOSED STIRRUPS CONTINUOUS ACROSS THE SPAN.
      c. PROVIDE CONCRETE CUBES OR SAND PLATED CHAIRS FOR THE SUPPORT OF REINFORCING ON GRADE.
      d. WELDED WIRE FABRIC SHALL BE CHAIRED TO ITS PROPER HEIGHT AND MAINTAINED AT THE PROPER LEVEL THROUGHOUT THE CONCRETE PLACING OPERATION. LIFTING OF WELDED WIRE FABRIC WITH A HOOK DURING CONCRETE PLACEMENT SHALL NOT BE PERMITTED.

TABLE 1A
MINIMUM LAP SPLICE AND ANCHORAGE DIMENSION TABLE

USE THIS TABLE FOR ASTM A615 GRADE 60-UNCOATED REINFORCING WHEN CONCRETE CLEAR COVER IS 1" OR MORE AND BAR CLEAR SPACING IS LESS THAN THREE (3) BAR DIAMETERS. IN ALL OTHER CASES USE TABLE #1B. IF CONCRETE CLEAR COVER IS LESS THAN 1", LAP AND ANCHORAGE LENGTHS SHALL BE CALCULATED PER ACI 318.

	(4000 PSI CONCRETE)					(3000 PSI CONCRETE)				
	TOP BARS		OTHER BARS				TOP BARS		OTHER BARS	
BAR SIZE	LAP	ANCH	LAP	ANCH	BAR SIZE	BAR SIZE	LAP	ANCH	LAP	ANCH
#3	20"	16"	16"	12"	#3	#3	23"	18"	18"	14"
#4	33"	25"	25"	19"	#4	#4	38"	29"	29"	22"
#5	47"	36"	36"	28"	#5	#5	54"	42"	42"	32"
#6	62"	48"	48"	37"	#6	#6	72"	55"	55"	43"
#7	99"	76"	76"	59"	#7	#7	114"	88"	88"	68"
#8	121"	93"	93"	72"	#8	#8	139"	107"	107"	83"
#9	136"	105"	105"	81"	#9	#9	157"	121"	121"	93"
#10	153"	118"	118"	91"	#10	#10	177"	136"	136"	105"
#11	(MC)	131"	131"	101"	#11	#11	(MC)	151"	151"	116"

TABLE 1B
MINIMUM LAP SPLICE AND ANCHORAGE DIMENSION TABLE

USE THIS TABLE FOR ASTM A615 GRADE 60-UNCOATED REINFORCING WHEN CONCRETE CLEAR COVER IS 1" OR MORE AND BAR CLEAR SPACING IS GREATER THAN OR EQUAL TO THREE (3) BAR DIAMETERS. IF CONCRETE CLEAR COVER IS LESS THAN 1", LAP AND ANCHORAGE LENGTHS SHALL BE CALCULATED PER ACI 318.

	(4000 PSI CONCRETE)					(3000 PSI CONCRETE)				
	TOP BARS		OTHER BARS				TOP BARS		OTHER BARS	
BAR SIZE	LAP	ANCH	LAP	ANCH	BAR SIZE	BAR SIZE	LAP	ANCH	LAP	ANCH
#3	18"	14"	16"	12"	#3	#3	21"	17"	17"	13"
#4	24"	19"	19"	15"	#4	#4	28"	22"	22"	17"
#5	31"	24"	24"	18"	#5	#5	35"	27"	27"	21"
#6	40"	31"	31"	24"	#6	#6	46"	35"	35"	27"
#7	65"	50"	50"	38"	#7	#7	74"	57"	57"	44"
#8	81"	62"	62"	48"	#8	#8	93"	72"	72"	55"
#9	99"	76"	76"	58"	#9	#9	113"	87"	87"	67"
#10	120"	92"	92"	71"	#10	#10	137"	106"	106"	82"
#11	(MC)	108"	108"	83"	#11	#11	(MC)	125"	(MC)	96"

TABLES 1A AND 1B NOTES:
A. FOR EPOXY COATED REINFORCING MULTIPLY THE TABLE VALUES ABOVE BY 1.31 FOR TOP BARS AND 1.5 FOR OTHER BARS.
B. FOR LIGHTWEIGHT CONCRETE MULTIPLY THE TABLE VALUES ABOVE BY 1.3.
C. FOR BUNDLED BARS MULTIPLY THE TABLE VALUES ABOVE BY: 1.2 (3 BAR BUNDLE), 1.33 (4 BAR BUNDLE).
D. (MC) DENOTES MECHANICAL COUPLER DEVELOPING 125% OF THE BAR YIELD STRENGTH. NO OTHER SPLICE WILL BE ACCEPTED.
E. WHEN LAPPING TWO DIFFERENT SIZE BARS, USE THE LAP DIMENSION OF THE SMALLER BAR OR THE ANCHORAGE DIMENSION OF THE LARGER BAR. USE WHICHEVER DIMENSION IS LARGER.
F. TOP BARS SHALL BE DEFINED AS BEAM AND SLAB HORIZONTAL REINFORCEMENT SO PLACED THAT MORE THAN 12" OF FRESH CONCRETE IS CAST IN THE MEMBER BELOW THE TOP REINFORCEMENT. HORIZONTAL REINFORCING IN WALLS SHALL BE CONSIDERED TOP BARS.

TABLE 2
TYPICAL REINFORCING BAR CLEARANCE TABLE

LOCATION	CLEARANCE
CONCRETE CAST AGAINST AND PERMANENTLY EXPOSED TO EARTH	3"
BEAM STIRRUPS	1 1/2"
COLUMNS AND PIERS (VERTICAL REINFORCING)	2"
COLUMN AND PIER TIES	1 1/2"
WALLS (INTERIOR FACE)	1"
WALLS (EXTERIOR FACE, #5 AND SMALLER)	1 1/2"
WALLS (EXTERIOR FACE, #6 AND LARGER)	2"
SURFACES EXPOSED TO LIQUIDS	2"
FRAMED SLABS (INTERIOR, INCLUDING STAIRS)	1"
FRAMED SLABS (EXTERIOR, INCLUDING STAIRS)	1 1/2"
SLABS ON GRADE (BOTTOM REINFORCING)	2"
SLABS ON GRADE (WELDED WIRE FABRIC)	1/3 SLAB THICKENED FROM TOP

STRUCTURAL STEEL

1. GOVERNING CODES:
   A. DETAIL, FABRICATE, AND ERECT STRUCTURAL STEEL IN ACCORDANCE WITH THE AISC STEEL CONSTRUCTION MANUAL, 15TH EDITION, AND ALL SPECIFICATIONS INCLUDED THEREIN.
   B. THE STRUCTURE WAS DESIGNED USING LRFD APPROACH PER THE 15TH EDITION OF THE AISC "STEEL CONSTRUCTION MANUAL".
   C. WELDED CONNECTIONS SHALL CONFORM TO THE AMERICAN WELDING SOCIETY, AWS D1.1, LATEST EDITION.
   D. BOLTED CONNECTIONS SHALL CONFORM TO THE REQUIREMENTS OF THE "SPECIFICATIONS FOR STRUCTURAL JOINTS USING HIGH STRENGTH BOLTS" AS APPROVED BY THE RESEARCH COUNCIL ON STRUCTURAL CONNECTIONS..

2. MATERIALS AND PRODUCTS:
   A. STRUCTURAL STEEL:
      a. ROLLED STEEL SHAPES UNLESS NOTED ON THE DRAWINGS: ASTM A992 (FY=50 KSI)
      b. ROLLED STEEL CHANNELS: ASTM A992 (Fy=50 KSI) OR ASTM A36 (FY=36 KSI)
      c. ROLLED STEEL PLATES AND BARS UP TO 4" THICK, AND ANGLES: ASTM A572 GRADE 50 (Fy=50 KSI)
      d. ROLLED STEEL PLATES AND BARS OVER 4" THICK, AND RODS: ASTM A36 (FY=36 KSI)
      e. ROUND HSS: ASTM A500, GRADE C (FY=50 KSI)
      f. RECTANGULAR HSS: ASTM A500, GRADE C (FY=50 KSI)
   B. BOLTS:
      a. ASTM F3125 CLASS 120 (GRADE A325 OR GRADE F1852), BEARING-TYPE BOLTS WITH THREADS INCLUDED IN THE SHEAR PLANE
      b. ALL BOLTS SHALL BE DOMESTICALLY PRODUCED.
   C. ANCHOR BOLTS:
      a. ASTM F-1554, GRADE 55 (WITH SUPPLEMENT S1), OR AS SPECIFIED ON THE DRAWINGS.
      b. PROVIDE HEAVY HEX NUT AND WASHER AT BOTH ENDS, UNO.
   D. WELDING ELECTRODES: E70 XX (LOW HYDROGEN) OR BETTER.
   E. PAINT AND PROTECTION:
      a. GALVANIZING:
         - STEEL EXPOSED TO WEATHER, EXPOSED TO EARTH, EXPOSED TO VIEW OUTSIDE THE BUILDING ENVELOPE, OR DENOTED ON THE DRAWINGS TO BE GALVANIZED SHALL BE HOT-DIPPED GALVANIZED AFTER FABRICATION.
         - ALL BRICK RELIEF ANGLES SHALL BE HOT-DIPPED GALVANIZED AFTER FABRICATION.
         - BOLTS FASTENING GALVANIZED MATERIAL SHALL BE MECHANICALLY GALVANIZED.
         - GALVANIZING SHALL BE REMOVED PER AWS D-19.0, "WELDING ZINC COATED STEEL", PRIOR TO FIELD WELDING. WELDS SHALL BE TOUCHED-UP WITH TWO COATS OF ZINC-RICH PAINT BRUSH APPLIED USING ZRC GALVANIZING COMPOUND OR EQUAL.
         - PROVIDE VENT/DRAINAGE HOLES IN HSS MEMBERS (MINIMUM 3/4 DIAMETER, BOTTOM SIDE OF HORIZONTAL MEMBERS, WITHIN 2" OF BASE FOR VERTICAL MEMBERS) PRIOR TO GALVANIZING.
      b. PAINT:
         - STEEL WITHIN UNCONDITIONED AREAS OUTSIDE THE BUILDING ENVELOPE (E.G. EXTERIOR SOFFITS, CANOPIES, ETC.) BUT NOT EXPOSED TO VIEW SHALL BE P

ARCH E1 30"x42" Approved: AK Checked: PA Designer: AA Project Management Initials: MR

STEEL JOISTS AND JOIST GIRDERS

1. STEEL JOISTS SHALL CONFORM TO THE REQUIREMENTS OF THE LATEST EDITION OF THE STEEL JOIST INSTITUTE (SJI) STANDARD SPECIFICATIONS, LOAD TABLES AND WEIGHT TABLES FOR STEEL JOISTS AND JOIST GIRDERS.

   A. THE STEEL JOIST MANUFACTURER SHALL BE A MEMBER OF THE STEEL JOIST INSTITUTE.

2. JOISTS AND JOIST GIRDERS SHALL BE DESIGNED FOR A MINIMUM NET UPLIFT LOAD EQUAL TO 20 PSF (SERVICE LEVEL)

3. VERIFY THE EXACT SIZE AND LOCATION OF ALL FLOOR AND ROOF OPENINGS PRIOR TO FABRICATION OF JOISTS AND HEADERS.

4. THE JOIST VENDOR SHALL PROVIDE HEADERS OF ADEQUATE STRENGTH FOR JOIST SUPPORT AT OPENINGS.

5. HANGERS TO SUPPORT MECHANICAL EQUIPMENT, ETC. SHALL BE SUPPORTED BY THE BOTTOM CHORD OF JOISTS AND SHALL BE LOCATED AT THE PANEL POINTS. PROVIDE JOIST STIFFENERS AS INDICATED IN DETAILS. HANGERS SHALL BE LOCATED AT THE CENTERLINE OF THE BOTTOM CHORD MEMBER.

6. TOP AND BOTTOM CHORDS OF JOISTS AND JOIST GIRDERS SHALL BE CONTINUOUS WITHOUT ANY SPLICES OF MATERIAL.

7. JOISTS AND JOIST GIRDERS SHALL BE ERECTED STRAIGHT. SWEEPS SHALL BE A MAXIMUM OF 1" MEASURED AT THE CENTER.

8. JOIST PANEL POINTS FOR THE FULL WIDTH OF EACH BAY SHALL LINE UP WITH EACH OTHER WITHIN A TOLERANCE OF +/- 1".

9. SUPPORT CONNECTIONS:
   A. WHERE COLUMNS ARE NOT FRAMED IN AT LEAST TWO DIRECTIONS WITH STRUCTURAL STEEL MEMBERS, A BAR JOIST WITH BOTTOM CHORD EXTENDED SHALL BE FIELD BOLTED TOP AND BOTTOM TO COLUMNS TO PROVIDE LATERAL STABILITY.
   B. WELD ALL STEEL JOISTS TO SUPPORTING STRUCTURAL STEEL MEMBERS AS SHOWN ON THE DRAWINGS AND ACCORDING TO SJI AND AWS D1.1, AS A MINIMUM.
   C. JOIST BEARING LENGTH:
      a. K SERIES JOISTS SHALL HAVE A MINIMUM LENGTH OF BEARING ON STEEL BEAMS OF 3".
      b. IF THIS MINIMUM BEARING CANNOT BE MET DUE TO MULTIPLE JOISTS BEARING ON THE SAME SUPPORT, THE JOIST PLACEMENT MUST BE STAGGERED TO ACHIEVE THE MINIMUM REQUIRED BEARING.

10. BRIDGING:
   A. JOIST BRIDGING SHALL BE FURNISHED AND INSTALLED TO MEET THE DESIGN AND SPACING REQUIREMENTS OF THE SJI STANDARD SPECIFICATIONS FOR STEEL JOISTS AND JOIST GIRDERS.
   B. PROVIDE HORIZONTAL BRIDGING FOR SHORT SPAN ROOF JOISTS.
   C. PROVIDE RIGID X-BRIDGING FOR ALL LH AND DLH SERIES JOISTS.
   D. ALL BRIDGING AND BRIDGING ANCHORS SHALL BE COMPLETELY INSTALLED BEFORE CONSTRUCTION LOADS ARE PLACED ON THE JOISTS.
   E. ENDS OF JOIST BRIDGING LINES SHALL BE ANCHORED TO MASONRY WALLS OR STEEL BEAMS.
   F. BRIDGING SHALL BE WELDED TO JOISTS IN SUCH A MANNER AS NOT TO IMPAIR THE STRUCTURAL INTEGRITY OF THE JOIST.
   G. RIGID X-BRACING AS SHOWN ON THE PLANS SHALL BE BOLTED OR WELDED AT THE INTERSECTION OF THE TWO BRIDGING MEMBERS BETWEEN JOISTS.

11. PAINT AND PROTECTION:
   A. JOISTS AND JOIST GIRDERS AND ACCESSORIES SHALL HAVE ONE SHOP COAT OF PAINT MEETING THE MINIMUM PERFORMANCE REQUIREMENTS OF THE LATEST SJI SPECIFICATIONS, UNLESS NOTED OTHERWISE.
   B. ASPHALT PAINT IS NOT ACCEPTABLE.

STEEL DECK

1. STEEL DECK FABRICATION AND ERECTION SHALL CONFORM TO THE LATEST STEEL DECK INSTITUTE SPECIFICATIONS.

2. PROVIDE DECK THAT HAS THE FOLLOWING PROPERTIES:
   A. ASTM A653 GR 40
   B. MINIMUM SECTION PROPERTIES:
      a. 1 1/2" ROOF DECK (20 GAGE): Ip=0.201in⁴/ft; Sp=0.234in³/ft; In=0.222in⁴/ft; Sn=0.247in³/ft
      b. 2" COMPOSITE FLOOR DECK (20 GAGE): Ip=0.409in⁴/ft; Sp=0.341in³/ft; In=0.406in⁴/ft; Sn=0.346in³/ft
   C. COMPOSITE FLOOR DECK SHALL HAVE AN ALLOWABLE SDI UNSHORED CLEAR SPAN OF NOT LESS THAN 9'-0" (2-SPAN CONDITION).
   D. PAINT AND PROTECTION:
      A. FLOOR DECK SHALL BE GALVANIZED (G-60), UNLESS NOTED OTHERWISE.
      B. ROOF DECK SHALL BE GALVANIZED (G-90), UNLESS NOTED OTHERWISE.

3. DECK SHALL INCLUDE ALL MISCELLANEOUS CLOSURE PIECES, CLOSURE PIECES, POUR STOPS, ROOF CURBS, DRAIN SUMP PANS, REINFORCING AROUND OPENINGS, ETC. REQUIRED TO MAKE A COMPLETE JOB. MISCELLANEOUS ITEMS SHALL BE GALVANIZED AND SHALL BE NO THINNER THAN 18 GAGE.

4. DUE ALLOWANCE SHALL BE MADE FOR DEFLECTION OF UNSHORED SLABS. NO ADDITIONAL PAYMENTS WILL BE MADE FOR EXTRA CONCRETE USED TO FINISH SURFACES TO REQUIRED ELEVATIONS.

5. STEEL DECK CROSS SECTIONS ARE ONLY REPRESENTED DIAGRAMMATICALLY ON THE DRAWINGS.

6. NO LOADS SHALL BE HUNG FROM STEEL ROOF DECK.

7. DECK ATTACHMENT:
   A. FLOOR DECK:
      a. PUDDLE WELD (3/4" DIAMETER MINIMUM) TO THE SUPPORTS AT 12" CENTERS MAXIMUM WITH THE FIRST AND LAST RIBS OF EACH SHEET WELDED TO THE SUPPORTS.
      b. SCREW SIDE LAPS WITH #10 SELF-TAPPING SCREWS AT 36" ON CENTER.
      c. HEADED STUDS IN COMPOSITE CONSTRUCTION MAY BE SUBSTITUTED FOR PUDDLE WELDS.
      d. MECHANICAL FASTENING IN LIEU OF WELDING PERMITTED WITH PRIOR APPROVAL FROM THE CONTRACTING OFFICER.
   B. ROOF DECK
      a. UNLESS NOTED OTHERWISE, MECHANICALLY FASTEN TO THE SUPPORTS AT 12" CENTERS MAXIMUM WITH THE FIRST AND LAST RIBS OF EACH SHEET FASTENED TO THE SUPPORTS.
      b. AT BRACED FRAMES, MOMENT FRAMES, BUILDING PERIMETER AND HIGH AND LOW ROOF STEP ELEVATIONS, PROVIDE FASTENERS AT 6" ON CENTER MAXIMUM.
      c. SPACE FASTENERS AT 6" CENTERS IN THE CORNER AND PERIMETER AREAS BASED ON ROOF AREA DEFINITIONS OF FM LOSS PREVENTION DATA SHEET 1-28.
      d. SCREW SIDE LAPS WITH #10 SELF-TAPPING SCREWS AT 36" ON CENTER.
      e. PUDDLE WELDS IN LIEU OF MECHANICAL FASTENERS MAY BE PERMITTED WITH PRIOR APPROVAL FROM THE CONTRACTING OFFICER.
   C. MECHANICAL FASTENERS INTO STEEL JOISTS AND FRAMING WITH TOP CHORD OR FLANGE THICKNESS BETWEEN 1/8" AND 3/8" SHALL BE HILTI X-HSN-24 (OR APPROVED EQUAL).
   D. MECHANICAL FASTENERS INTO STEEL FRAMING WITH FLANGE THICKNESS GREATER THAN 1/4" SHALL BE HILTI X-ENP-19 L15 (OR APPROVED EQUAL).

SHEAR CONNECTORS

1. SHEAR CONNECTOR WORK SHALL CONFORM TO THE LATEST SPECIFICATION FOR DESIGN OF LIGHT GAGE COLD-FORMED STEEL STRUCTURAL MEMBERS (AISI) SPECIFICATION FOR STRUCTURAL STEEL BUILDINGS (AISC) STRUCTURAL WELDING CODE - STEEL (AWS D1.1), AND STRUCTURAL WELDING CODE - SHEET STEEL (AWS D1.3).

2. FRAMED FLOOR CONSTRUCTION, IN GENERAL, CONSISTS OF CONCRETE CAST ON STEEL DECK AND COMPOSITE IN ACTION WITH THE STRUCTURAL STEEL BEAMS BY MEANS OF WELDED SHEAR CONNECTORS.

3. SHEAR CONNECTORS SHALL CONFORM TO ASTM A108, GRADES 1010, 1015, 1017, OR 1020. TYPICALLY, SHEAR CONNECTORS SHALL BE 3/4" DIAMETER HEADED STUDS X 4" LONG, UNLESS NOTED OTHERWISE.

4. SHEAR CONNECTORS SHALL BE WELDED WITH A STUD GUN. STICK WELDING OF SHEAR CONNECTORS IS NOT PERMITTED.

5. THE NUMBER OF SHEAR CONNECTORS REQUIRED PER BEAM IS INDICATED BY (32), ETC. ON THE DRAWINGS. WHERE NO SHEAR CONNECTORS ARE INDICATED FOR A BEAM WHICH SUPPORTS A CONCRETE SLAB, PROVIDE SHEAR CONNECTORS AT A SPACING OF 24" O.C. TYPICAL, AND AT 12" O.C. AT ALL BRACED FRAME BEAMS.

6. PROVIDE SHEAR CONNECTORS AT A MAXIMUM SPACING OF 12" OC FOR ALL BEAMS WITH A LENGTH GREATER THAN 30 FEET EVEN IF FEWER SHEAR CONNECTORS ARE SHOWN ON PLAN.

7. SHEAR CONNECTORS SHALL BE EQUALLY SPACED OVER THE LENGTH OF THE BEAM. WHERE THE NUMBER OF STEEL DECK CORRUGATIONS AVAILABLE IS LESS THAN THE NUMBER OF SHEAR CONNECTORS, USE PAIRS OF SHEAR CONNECTORS STARTING FROM EACH END OF BEAM AND CONTINUING TOWARD THE CENTER UNTIL IT IS POSSIBLE TO RETURN TO A SINGLE SHEAR CONNECTOR IN EACH CORRUGATION. SHEAR CONNECTORS SHALL BE SPACED NOT CLOSER THAN 4 AND 6 STUD DIAMETERS IN THE TRANSVERSE AND LONGITUDINAL DIRECTIONS, RESPECTIVELY.

8. HORIZONTAL CLEARANCE SHALL BE A MINIMUM OF 1" FROM THE EDGE OF ALL SHEAR CONNECTORS TO THE FACE OF CONCRETE, STEEL DECK RIB, OR SIMILAR ADJACENCY.

9. EDGE DISTANCE FROM THE CENTER OF A SHEAR CONNECTOR TO THE FLANGE OF A STRUCTURAL STEEL BEAM SHALL PREFERABLY BE 2", BUT IN NO CASE LESS THAN 1-1/4".

POST-INSTALLED ANCHORS

1. MATERIALS AND PRODUCTS:
   A. ADHESIVE ANCHORS INTO CONCRETE:
      a. ADHESIVE: HILTI RE 500 V3 SAFE SET (ICC ESR 3814) OR HILTI HY 200 SAFE-SET (ICC ESR 3187) (OR APPROVED EQUAL CONSIDERING LOAD RESISTANCE, IN-SERVICE AND INSTALLATION TEMPERATURE, CREEP, AND INSTALLATION REQUIREMENTS).
      b. ANCHOR RODS: HILTI HIT-Z ANCHOR RODS (OR APPROVED EQUAL) UNLESS NOTED OTHERWISE. ADHESIVE ANCHORS SHALL BE APPROVED FOR USE IN SEISMIC APPLICATIONS PER ACI 355.4 AND AC 308. CURRENT ICC-ESR SHALL BE SUBMITTED.
   B. ADHESIVE ANCHORS INTO HOLLOW OR GROUT-FILLED MASONRY:
      a. ADHESIVE: HILTI-HY 270 (OR APPROVED EQUAL). MANUFACTURER SHALL PROVIDE ON-SITE TRAINING PRIOR TO USE OF HY 270 EPOXY AND SUBMIT LETTER TO THE CONTRACTING OFFICER INDICATING COMPLETION OF TRAINING.
      b. ANCHOR RODS: HILTI MAS-E ANCHOR RODS (OR APPROVED EQUAL) UNLESS NOTED OTHERWISE. CURRENT ICC-ESR SHALL BE SUBMITTED.
   C. MECHANICAL ANCHORS INTO CONCRETE: HILTI KWIK BOLT TZ2 (ICC ESR 4266) (OR APPROVED EQUAL). MECHANICAL ANCHORS SHALL BE APPROVED FOR USE IN SEISMIC APPLICATIONS PER ACI 355.2 AND AC 193. CURRENT ICC-ESR SHALL BE SUBMITTED.
   D. ANCHORS IN EXTERIOR LOCATIONS OR IN LOCATIONS EXPOSED TO MOISTURE OR EARTH SHALL BE HOT DIP GALVANIZED OR STAINLESS STEEL UNLESS NOTED OTHERWISE. ZINC PLATED ANCHORS SHALL NOT BE USED IN THESE LOCATIONS.

2. ANCHORS SHALL BE INSTALLED BY QUALIFIED PERSONNEL IN ACCORDANCE WITH THE MANUFACTURER'S PRINTED INSTALLATION INSTRUCTIONS. INSTALLATION OF ADHESIVE ANCHORS SHALL BE PERFORMED BY PERSONNEL CERTIFIED BY ACI/CRSI AS AN ADHESIVE ANCHOR INSTALLER. ALL PERSONNEL INSTALLING ADHESIVE OR MECHANICAL ANCHORS SHALL BE TRAINED BY THE ANCHOR MANUFACTURER ON PROPER INSTALLATION TECHNIQUES. TRAINING DOCUMENTATION FROM THE MANUFACTURER SHALL BE AVAILABLE UPON REQUEST.

3. ADHESIVE ANCHORS:
   A. CONCRETE SHALL BE AT LEAST 21 DAYS OLD BEFORE INSTALLATION OF POST-INSTALLED ADHESIVE ANCHORS OCCURS.

4. MECHANICAL ANCHORS:
   A. CONCRETE SHALL HAVE REACHED THE SPECIFIED f'c STRENGTH PRIOR TO MECHANICAL ANCHOR INSTALLATION.
   B. MECHANICAL ANCHORS SHALL NOT BE USED FOR NON-VIBRATION ISOLATED EQUIPMENT RATED OVER 10 HORESEPOWER WITH RECIPROCATING OR ROTATING MECHANISMS; ANCHORS SHALL BE UNDERCUT ANCHORS.

5. HOLE INSTALLATION:
   A. HOLES FOR POST-INSTALLED ANCHORS SHALL BE MADE WITH A HAMMER DRILL (NOT CORED). ALL DUST AND WATER SHALL BE REMOVED FROM THE HOLE PRIOR TO ANCHOR INSTALLATION (SURFACE OF CONCRETE MAY BE MOIST, BUT STANDING WATER SHALL NOT BE PRESENT IN THE HOLE).
   B. WHEN INSTALLING DRILLED IN ANCHORS USE CARE AND CAUTION TO AVOID CUTTING OR DAMAGING THE EXISTING REINFORCING BARS. WHEN INSTALLING THEM INTO CONCRETE WITH STRESSING TENDONS (POST-TENSIONED OR PRE-TENSIONED), LOCATE THE TENDONS BY USING A NON-DESTRUCTIVE METHOD PRIOR TO INSTALLATION. EXERCISE EXTREME CAUTION AND CARE TO MAINTAIN AT LEAST 1" CLEAR BETWEEN THE TENDON AND THE EDGE OF THE ANCHOR.
   C. IT IS RECOMMENDED THAT 1/4" PILOT HOLES BE DRILLED TO CONFIRM THAT EXISTING REINFORCING BARS ARE NOT PRESENT AND THAT ALL HOLES BE DRILLED WITH A HAMMER DRILL AND CARBIDE DRILL BITS.
   D. ALL UNNECESSARY AND UNUSED HOLES SHALL BE COMPLETELY FILLED WITH NON-SHRINK EPOXY GROUT. CLOSELY MATCH THE COLOR OF THE GROUT WITH THE COLOR OF THE EXISTING SURFACES OR PAINT TO A MATCHING COLOR. REFER TO GROUT MANUFACTURER'S RECOMMENDATIONS FOR PAINT.
   E. HOLES IN CONNECTION PLATES SHALL BE NO MORE THAN 1/16" LARGER THAN THE BOLT DIAMETER.

6. EMBEDMENT LENGTH OF MECHANICAL OR ADHESIVE ANCHORS INTO SOLID (OR GROUTED) MASONRY OR CONCRETE SHALL BE AS FOLLOWS UNLESS NOTED OTHERWISE:
   A. 1/2" DIAMETER EXPANSION BOLTS - 3 1/4" EMBEDMENT
   B. 5/8" DIAMETER EXPANSION BOLTS - 4" EMBEDMENT
   C. 3/4" DIAMETER EXPANSION BOLTS - 4 3/4" EMBEDMENT
   D. 1/2" DIAMETER ADHESIVE ANCHORS - 4 1/2" EMBEDMENT
   E. 5/8" DIAMETER ADHESIVE ANCHORS - 5 1/2" EMBEDMENT
   F. 3/4" DIAMETER ADHESIVE ANCHORS - 6 1/2" EMBEDMENT

COLD-FORMED LIGHT GAGE STEEL FRAMING

1. GOVERNING CODES:
   A. DETAILING AND FABRICATION OF ALL COLD-FORMED STRUCTURAL MEMBERS SHALL CONFORM TO THE AISI SPECIFICATIONS FOR THE DESIGN OF COLD-FORMED STEEL STRUCTURAL MEMBERS, LATEST EDITION.

2. MATERIALS AND PRODUCTS:
   A. STRUCTURAL STUDS, JOISTS, BRIDGING AND ACCESSORIES:
      a. FORM STRUCTURAL MEMBERS FROM CORROSION-RESISTANT STEEL MEETING ASTM A1003, STRUCTURAL GRADE, TYPE H, AND G90 COATING.
   B. MINIMUM YIELD STRENGTH OF 50,000 PSI FOR 16 GAGE AND THICKER MATERIALS, AND 33,000 PSI FOR MATERIALS THINNER THAN 16 GAGE.

3. FRAMING DESIGN AND SUBMITTALS:
   A. CONTRACTOR IS RESPONSIBLE FOR THE FINAL DESIGN AND PERFORMANCE OF ALL COLD-FORMED LIGHT GAGE STEEL FRAMING.
   B. ALL SIZES, GAGES AND DESIGN REQUIREMENTS SHOWN ON THESE DRAWINGS ARE TO BE CONSIDERED MINIMUM REQUIREMENTS AND NOT FINAL REQUIREMENTS.
   C. PRIOR TO FABRICATION OF FRAMING, CONTRACTOR SHALL SUBMIT FABRICATION AND ERECTION DRAWINGS TO THE CONTRACTING OFFICER FOR APPROVAL.
   D. COMPLETE CALCULATIONS SHALL BE SUBMITTED WITH THE FABRICATION DRAWINGS FOR ALL METAL STUD FRAMING. CALCULATIONS SHALL BE SIGNED AND SEALED BY A REGISTERED ENGINEER.
   E. MINIMUM DESIGN REQUIREMENTS AND SECTION PROPERTIES:
      a. EXTERIOR WALLS:
         - GAGE = 18
         - DEPTH = 6" UNO
         - FLANGE = 1 5/8"
         - ALLOWABLE DEFLECTION UNDER 10-YEAR WIND=SPAN/600
      b. HEAVIER GAGE STUDS OR TIGHTER SPACING MAY BE REQUIRED AT CORNERS, LONGER SPANS, WALL OPENINGS, ETC. CRITERIA LISTED ABOVE IS A MINIMUM REQUIREMENT.
      c. MAXIMUM WALL STUD SPACING = 16" ON CENTER

4. PREFABRICATED PANELS:
   A. HANDLING AND LIFTING OF PREFABRICATED PANELS SHALL BE DONE IN SUCH A MANNER AS TO NOT CAUSE DISTORTION IN ANY MEMBER.
   B. TRACKS SHALL BE SECURELY ANCHORED TO THE SUPPORTING STRUCTURE.
   C. STUDS SHALL BE PLUMBED, ALIGNED AND SECURELY ATTACHED TO THE FLANGES OR WEBS OF BOTH UPPER AND LOWER TRACKS.
   D. JACK STUDS OR CRIPPLES SHALL BE INSTALLED BELOW WINDOW SILLS AND ABOVE WINDOW AND DOOR HEADS, AT FREE-STANDING RAILS AND ELSEWHERE TO FURNISH SUPPORT AND SHALL BE SECURELY ATTACHED TO SUPPORTING MEMBERS.

5. FRAMING BRACING AND CONNECTIONS:
   A. TEMPORARY BRACING SHALL BE PROVIDED UNTIL ERECTION IS COMPLETED.
   B. WALL STUD BRIDGING SHALL BE INSTALLED IN A MANNER AS TO PREVENT ROTATION AND ALSO IN A MANNER TO PROVIDE RESISTANCE TO BOTH MINOR AXIS BENDING AND ROTATION. WALL SHEATHING SHALL NOT BE CONSIDERED TO PROVIDE BRACING TO WALL STUDS.
   C. BRIDGING ROWS SHALL BE EQUALLY SPACED AT 4'-0" ON CENTER MAXIMUM, UNLESS APPROVED OTHERWISE.
   D. PROVIDE CONNECTIONS, BRACES, BRIDGING AND RUNNER TRACKS (MINIMUM 16 GAGE, BUT NOT LESS THAN GAGE OF SUPPORTED STUD) TO DEVELOP THE FULL CAPACITY OF THE MEMBERS.
   E. FASTEN COMPONENTS WITH SELF-DRILLING SCREWS OR BY WELDING. PROVIDE SCREWS AND WELDS OF SUFFICIENT SIZE TO ENSURE THE STRENGTH OF THE CONNECTION. TOUCH UP WELDS WITH ZINC-RICH PAINT.
   F. PROVIDE AND COORDINATE VERTICAL SLIP CONNECTIONS TO STRUCTURAL STEEL MEMBERS WHERE REQUIRED.

6. PROVIDE CLIPS, CONNECTIONS, STRAPPING FOR TEMPORARY LATERAL BRACING AND ALL ITEMS NECESSARY FOR COMPLETE INSTALLATION.

7. COORDINATE WITH ARCHITECTURAL AND STRUCTURAL DRAWINGS FOR ALL LIGHT GAGE FRAMING LOCATIONS AND REQUIREMENTS. COORDINATE LOCATIONS AND DESIGN FOR ALL WALL HUNG EQUIPMENT.

8. WALL OPENINGS:
   A. WINDOW AND DOOR HEADS SHALL BE FRAMED WITH JOIST SECTIONS SUFFICIENT TO CARRY THE WEIGHT OF THE WALL ABOVE AND TRANSFER WINDOW AND WALL LATERAL FORCES TO THE JAMBS.
   B. JAMB SECTIONS SHALL CONSIST OF HEAVIER GAGE STUDS, MULTIPLE STUDS OR BOTH AS REQUIRED TO PROVIDE LATERAL SUPPORT FOR WINDOW AND DOOR OPENINGS.

N

This drawing has been prepared for the use of AECOM's client and may not be used, reproduced or relied upon by third parties, except as agreed by AECOM and its client, as required by law or for use by governmental reviewing agencies. AECOM accepts no responsibility, and denies any liability whatsoever, to any party that modifies this drawing without AECOM's express written consent. Do not scale this document. All measurements must be obtained from the stated dimensions.

AECOM

PROJECT

NEW SECURITY FORCES BUILDING

PAYNE BLVD.
CHARLOTTE, NORTH CAROLINA 28208

CLIENT

NORTH CAROLINA AIR NATIONAL GUARD - 145TH AIRLIFT WING

145th AIRLIFT WING
4930 MINUTEMAN WAY
CHARLOTTE, NORTH CAROLINA 28208

ARCHITECT/DESIGNER

AECOM

277 W NATIONWIDE BLVD
COLUMBUS, OH 43215
614-464-4500

http://www.aecom.com

CONSULTANTS

REGISTRATION

STATE OF OHIO
ANDREW L KNAPKE
9E-66697
REGISTERED
PROFESSIONAL ENGINEER
5-30-25

ISSUE/REVISION

I/R	DATE	DESCRIPTION
	05/30/2025	B-3 SUBMITTAL - FINAL

PROJECT NUMBER

60637899
FJRP229030

SHEET TITLE

GENERAL NOTES

SHEET NUMBER

S003

©2023 AECOM Corporation

Last Plotted: 5/20/2025 4:16:50 PM
Filename: BM 36x18P-ARCH (USA) 60637899 SFNCANG145K60637899_SF-NC ANG_R31_S-H

Printed on ___% Post-Consumer Recycled Content Paper

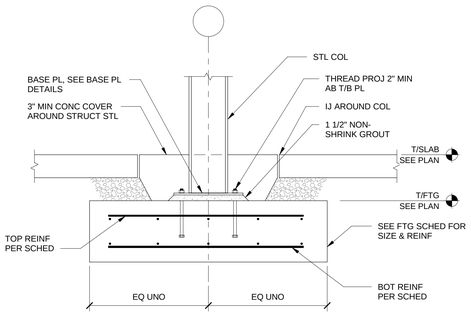

1 TYPICAL COLUMN FOOTING DETAIL
S007 Scale: 3/4" = 1'-0"

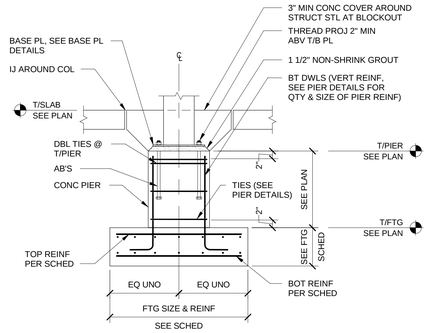

2 TYPICAL FOOTING AND PIER DETAIL
S007 Scale: 3/4" = 1'-0"

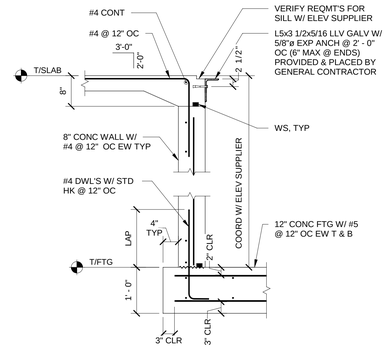

3 TYPICAL ELEVATOR PIT DETAIL
S007 Scale: 3/4" = 1'-0"

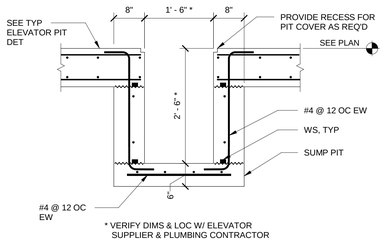

4 TYPICAL SUMP PIT DETAIL
S007 Scale: 3/4" = 1'-0"

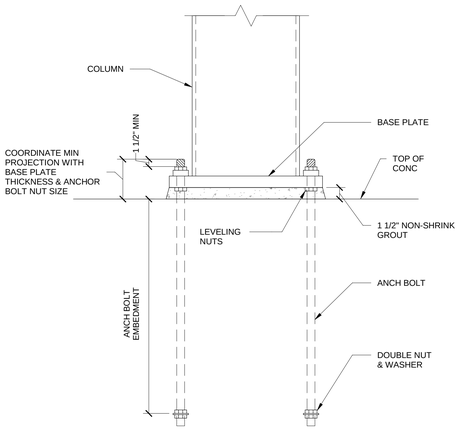

5 TYPICAL COLUMN BASE DETAIL
S007 Scale: 3" = 1'-0"

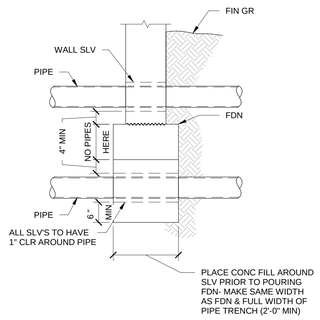

6 TYPICAL PIPE SLEEVE DETAIL
S007 Scale: 3/4" = 1'-0"

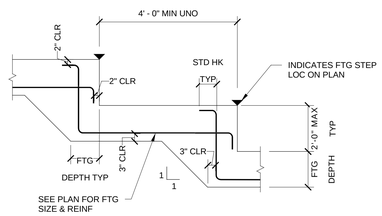

7 TYPICAL FOOTING STEP DETAIL
S007 Scale: 1/2" = 1'-0"

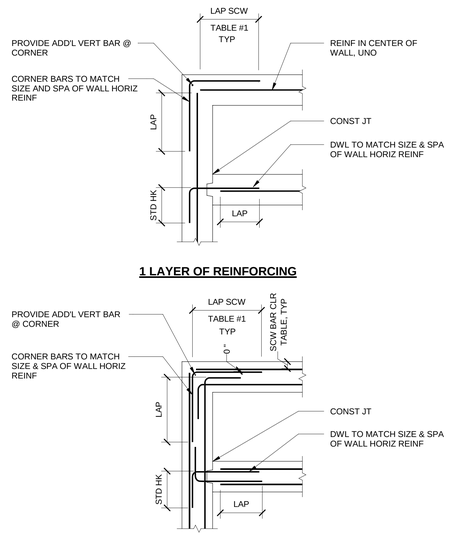

8 TYPICAL CONCRETE WALL CORNER DETAILS
S007 Scale: 3/4" = 1'-0"

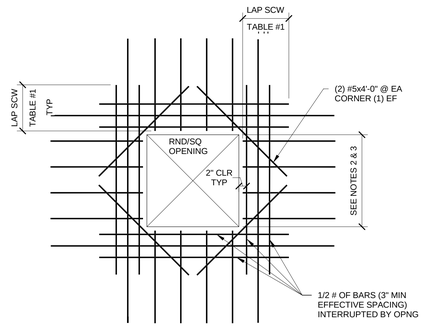

NOTES:
1. ALL HOLES & BLOCK OUTS IN THE FLOOR SLAB(S) & WALLS SHALL BE EITHER FORMED OR PROVIDED W/PIPE SLEEVES BEFORE POURING CONCRETE. HOLES SHALL NOT BE DRILLED OR CUT WITHOUT THE WRITTEN PERMISSION OF THE CONTRACTING OFFICER. DO NOT CUT THROUGH REINF BARS.
2. ADDITIONAL REINFORCEMENT NOT REQUIRED AT OPENINGS LESS THAN 10" IN WIDTH OR DIAMETER.
3. DO NOT CONSTRUCT AN OPENING THAT EXCEEDS 3'-0" IN WIDTH, LENGTH, OR DIAMETER UNLESS THE OPENING IS SPECIFICALLY SHOWN ON THE STRUCTURAL DRAWINGS.
4. TABLE #1 REFERS TO TABLES PART OF "CAST-IN-PLACE CONCRETE" GENERAL NOTES ON SHEET S002

9 TYPICAL CAST OPENING IN CONCRETE WALL/FLOOR
S007 Scale: 3/4" = 1'-0"

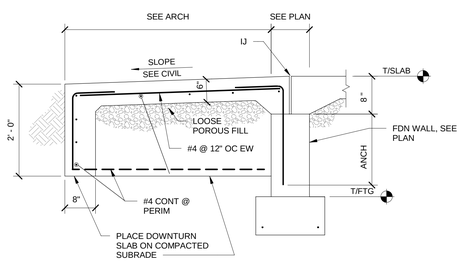

10 TYPICAL APRON/ENTRANCE
S007 Scale: 3/4" = 1'-0"

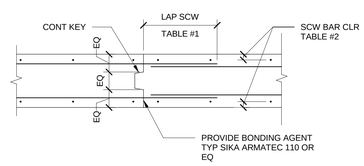

2 LAYERS OF REINFORCING

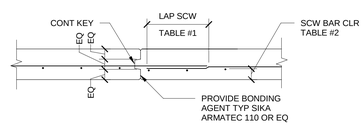

1 LAYER OF REINFORCING

NOTES:
1. LOCATE ALL CONSTRUCTION JOINTS ON SHOP DRAWINGS.
2. PROVIDE PVC WATERSTOPS IN ALL BELOW GRADE CONSTRUCTION JOINTS UNLESS BOTH SIDES OF THE JOINT ARE EXPOSED TO EARTH.

11 TYPICAL CONCRETE WALL CONSTRUCTION JOINT
S007 Scale: 3/4" = 1'-0"

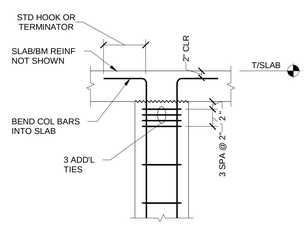

12 TYPICAL CONCRETE COLUMN DETAIL AT TOP LEVEL
S007 Scale: 3/4" = 1'-0"

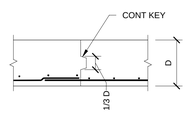

FOOTING

LOCATE ALL CONSTRUCTION JOINTS ON THE SHOP DRAWINGS

13 FOOTING - TYPICAL HORIZ CONSTRUCTION JOINT
S007 Scale: 3/4" = 1'-0"

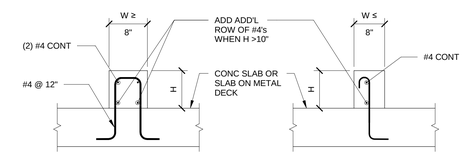

NOTE: SEE ARCH DWGS FOR LOCATION

NOTE: SEE ARCH DWGS FOR LOCATION

14 TYPICAL CURB DETAILS
S007 Scale: 3/4" = 1'-0"

N

This drawing has been prepared for the use of AECOM's client and may not be used, reproduced or relied upon by third parties, except as agreed by AECOM and its client, as required by law or for use by governmental reviewing agencies. AECOM accepts no responsibility, and denies any liability whatsoever, to any party that modifies this drawing without AECOM's express written consent. Do not scale this document. All measurements must be obtained from the stated dimensions.

AECOM

PROJECT
NEW SECURITY FORCES BUILDING
PAYNE BLVD.
CHARLOTTE, NORTH CAROLINA 28208

CLIENT
NORTH CAROLINA AIR NATIONAL GUARD - 145TH AIRLIFT WING
145th AIRLIFT WING
4930 MINUTEMAN WAY
CHARLOTTE, NORTH CAROLINA 28208

ARCHITECT/DESIGNER
AECOM
277 W NATIONWIDE BLVD
COLUMBUS, OH 43215
614-464-4500

http://www.aecom.com

CONSULTANTS

REGISTRATION

STATE OF OHIO ANDREW L. KNAPKE 9E-66697 REGISTERED PROFESSIONAL ENGINEER
5-30-25

ISSUE/REVISION

I/R	DATE	DESCRIPTION
	05/30/2025	B-3 SUBMITTAL - FINAL

PROJECT NUMBER
60637899
FJRP229030

SHEET TITLE
TYPICAL DETAILS

SHEET NUMBER
S007

©2023 AECOM Corporation

ARCH E1 30"x42" Approved: AK Checked: PA Designer: AA Project Management Initials: MR

Last Plotted: 5/20/2025 4:16:51 PM
Filename: BM 360/BP-AMER (USA) 60637899 SFNC/ANG/145th/60637899_SF-NC ANG_R31_S-r4

Printed on ___% Post-Consumer Recycled Content Paper

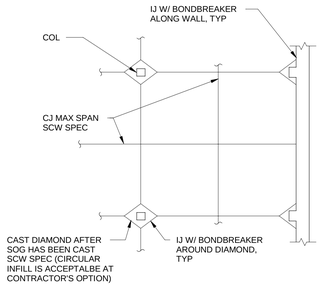

1 | TYPICAL SOG JOINT PATTERN
S008 | Scale: 3/4" = 1'-0"

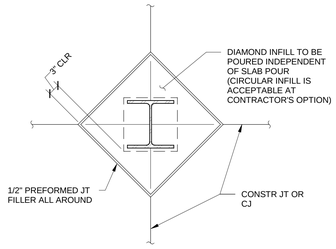

2 | TYPICAL SLAB BLOCKOUT AT COLUMN
S008 | Scale: 3/4" = 1'-0"

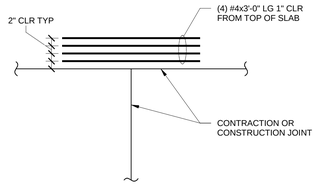

PLAN

3 | TYPICAL DISCONTINUOUS SOG JOINT DETAIL
S008 | Scale: 3/4" = 1'-0"

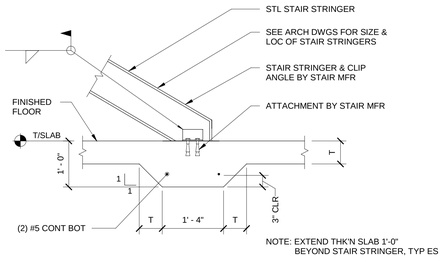

NOTE:
1. T= SLAB THK
2. DETAIL APPLICABLE TO STAIR POSTS SUPPORTED OFF SLAB ON GRADE.

4 | TYP THICKENED SLAB UNDER STAIR POST AND STRINGER
S008 | Scale: 3/4" = 1'-0"

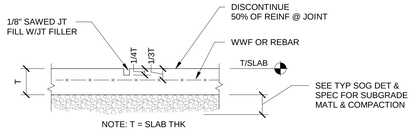

5 | TYPICAL REINFORCED SOG CONTRACTION JOINT
S008 | Scale: 3/4" = 1'-0"

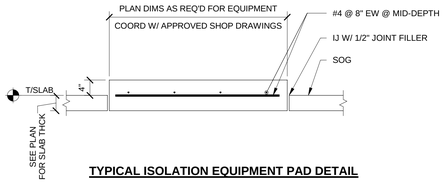

TYPICAL ISOLATION EQUIPMENT PAD DETAIL

6 | TYPICAL ISOLATION PAD DETAIL
S008 | Scale: 3/4" = 1'-0"

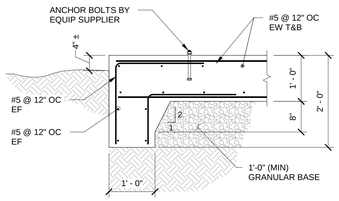

NOTE: PAD SIZE SHALL EXTEND 1'-6" MIN BEYOND THE EQUIPMENT LAYOUT, OR AS REQUIRED BY EQUIPMENT SUPPLIER.

7 | TYPICAL GENERATOR PAD
S008 | Scale: 3/4" = 1'-0"

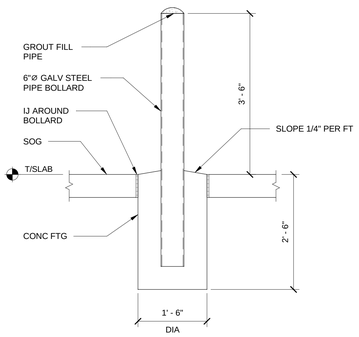

8 | TYPICAL BOLLARD DETAIL
S008 | Scale: 3/4" = 1'-0"

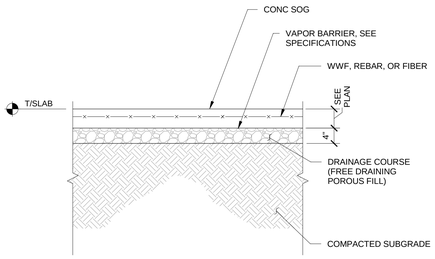

NOTES:
1. FOR SLABS ON GRADE PROVIDE MACRO FIBER AT A MINIMUM DOSAGE RATE OF 3.0 LBS PER CUBIC YARD AND AT A MAXIMUM DOSAGE RATE OF 3.5 LBS PER CUBIC YARD OF CONCRETE.
2. SUBGRADE SHALL BE PREPARED PER THE GEOTECHNICAL REPORT PRIOR TO SLAB PLACEMENT. UNSUITABLE SUBGRADE SHALL BE REMOVED AND REPLACED WITH AN ENGINEERED FILL OR ADEQUATE BORROW MATERIAL AND COMPACTED PER THE EARTHWORK SPECIFICATIONS AND GEOTECHNICAL REPORT RECOMMENDATIONS.
3. SEE GEOTECHNICAL REPORT FOR ADDITIONAL SUBGRADE PREPARATION REQUIREMENTS.
4. SLAB SHALL BE PLACED A MINIMUM OF 90 DAYS PRIOR TO INSTALLATION OF FLOOR FINISHES.
5. CURE SLAB WITH A MOISTURE RETAINING COVER, DO NOT WET CURE.

9 | TYPICAL SOG CONSTRUCTION
S008 | Scale: 3/4" = 1'-0"

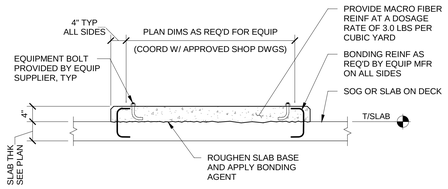

NOTES: COORDINATE SIZE, QUANTITY, & LOCATION OF EQUIPMENT BOLTS IF REQ'D & PAD W/EQUIPMENT SUPPLIER'S SHOP DWG SEE ARCH, MECH, ELEC, & PROCESS DWG FOR LOCATION OF EQUIPMENT PADS.

TYPICAL EQUIPMENT PAD

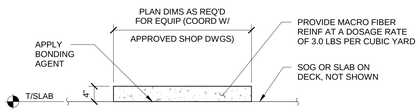

TYPICAL HOUSEKEEPING PAD

(DETAIL APPLIES WHERE POSITIVE CONNECTION IS NOT REQUIRED BETWEEN EQUIPMENT & PAD)

10 | TYPICAL EQUIPMENT PAD DETAILS
S008 | Scale: 3/4" = 1'-0"

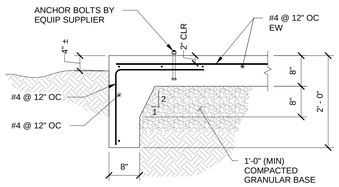

NOTE: PAD SIZE SHALL EXTEND 6" MIN BEYOND THE EQUIPMENT OR AS REQUIRED BY THE EQUIPMENT SUPPLIER.

11 | TYPICAL EQUIP PAD
S008 | Scale: 3/4" = 1'-0"

N

©2023 AECOM Corporation

This drawing has been prepared for the use of AECOM's client and may not be used, reproduced or relied upon by third parties, except as agreed by AECOM and its client, as required by law or for use by governmental reviewing agencies. AECOM accepts no responsibility, and denies any liability whatsoever, to any party that modifies this drawing without AECOM's express written consent. Do not scale this document. All measurements must be obtained from the stated dimensions.

AECOM

PROJECT
NEW SECURITY FORCES BUILDING
PAYNE BLVD.
CHARLOTTE, NORTH CAROLINA 28208

CLIENT
NORTH CAROLINA AIR NATIONAL GUARD - 145TH AIRLIFT WING
145th AIRLIFT WING
4930 MINUTEMAN WAY
CHARLOTTE, NORTH CAROLINA 28208

ARCHITECT/DESIGNER
AECOM
277 W NATIONWIDE BLVD
COLUMBUS, OH 43215
614-464-4500

http://www.aecom.com

CONSULTANTS

REGISTRATION

STATE OF OHIO
ANDREW L. KNAPKE
9E-66697
REGISTERED PROFESSIONAL ENGINEER
5-30-25

ISSUE/REVISION

I/R	DATE	DESCRIPTION
	05/30/2025	B-3 SUBMITTAL - FINAL

PROJECT NUMBER
60637899
FJRP229030

SHEET TITLE
TYPICAL DETAILS

SHEET NUMBER
S008

ARCH E1 30"x42" Approved: AK Checked: PA Designer: AA Project Management Initials: MR
Last Plotted: 5/20/2025 4:16:32 PM
Filename: BM_SOUTHP-AMER (USA) \\60637899-SFNCANG\145\60637899_SF-NC ANG_R21_S.rvt
Printed on ___% Post-Consumer Recycled Content Paper

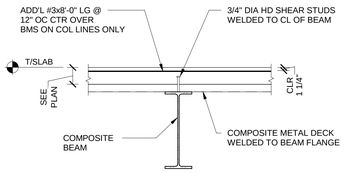

NOTES:

1. NUMBER OF SHEAR STUDS IS SHOWN ON PLANS.
2. SHEAR STUDS SHALL BE SPACED ACCORDING TO PLAN NOTES. MAXIMUM SPACING SHALL NOT EXCEED 24"
3. WHERE SHEAR STUD SPACING IS LESS THAN 4 1/2", INCREASE SPACING AS REQ'D & USE DOUBLE ROW OF STUDS LOCATED 1 3/8" IN FROM FLANGE EDGES.
4. FOR COMPOSITE BEAMS SMALLER THAN W12x19 WELD STUDS DIRECTLY ABOVE THE WEB TO AVOID DAMAGE TO FLANGE.

FOR ALL SLABS ON DECK PROVIDE MACRO FIBER AT 5.0 LB PER CUBIC YARD OF CONCRETE, COMPLIANT WITH ASTM C1116 TYPE III. FIBERS MUST ENHANCE DUCTILITY AND CONTROL SHRINKAGE CRACKING, WITH PERFORMANCE VERIFIED THROUGH ASTM C1609 TESTING. PROVIDE MANUFACTURER'S DATA AND CERTIFIED TEST REPORTS CONFIRMING COMPLIANCE. FOLLOW MANUFACTURER-RECOMMENDED MIXING AND PLACEMENT GUIDELINES. SEE CONCRETE SPECIFICATIONS FOR SLUMP REQUIREMENTS.

1 TYPICAL COMPOSITE BEAM AND SLAB
S009 Scale: 1/2" = 1'-0"

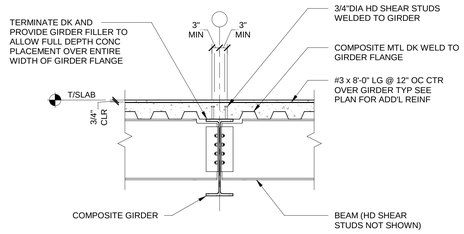

NOTE:
FOR ADDITIONAL INFORMATION SEE NOTES 1 THRU 4 OF THE TYPICAL COMPOSITE BEAM AND SLAB DETAIL

FOR ALL SLABS ON DECK PROVIDE MACRO FIBER AT 5.0 LB PER CUBIC YARD OF CONCRETE. COMPLIANT WITH ASTM C1116 TYPE III. FIBERS MUST ENHANCE DUCTILITY AND CONTROL SHRINKAGE CRACKING, WITH PERFORMANCE VERIFIED THROUGH ASTM C1609 TESTING. PROVIDE MANUFACTURER'S DATA AND CERTIFIED TEST REPORTS CONFIRMING COMPLIANCE. FOLLOW MANUFACTURER-RECOMMENDED MIXING AND PLACEMENT GUIDELINES. SEE CONCRETE SPECIFICATIONS FOR SLUMP REQUIREMENTS.

2 TYPICAL COMPOSITE GIRDER
S009 Scale: 1/2" = 1'-0"

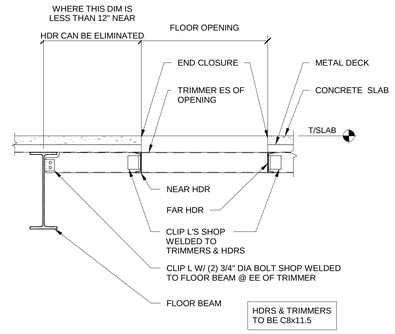

NOTES:
1. DETAIL APPLIES AT OPENINGS GREATER THAN 18" IN ANY DIRECTION, AND AT ALL ROOF DRAINS REGARDLESS OF SIZE.
2. COORDINATE LOCATION AND SIZE OF OPENINGS WITH ARCHITECTURAL DRAWINGS AND MECHANICAL & ELECTRICAL CONTRACTORS.

3 TYPICAL OPENING IN COMPOSITE SLAB
S009 Scale: 1/2" = 1'-0"

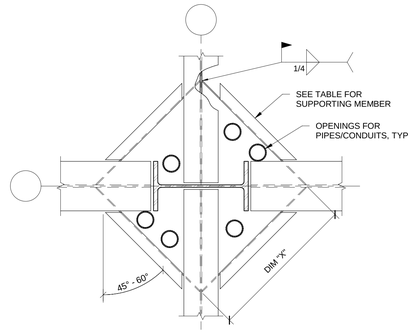

DIMENSION "X"	SUPPORTING MEMBER
5'-0" (MAXIMUM)	L5x3 1/2x1/4 LLV
9'-0" (MAXIMUM)	L6x4x1/2 LLV
OVER 9'-0"	C10x20
NOTE: PROVIDE ANGLE SUPPORTS FOR ALL METAL DECK RIBS AT COLUMNS WHEN COLUMN SIZE PREVENTS DECK FROM BEING SUPPORTED BY FRAMING MEMBER. USE DETAIL ABOVE AT COLUMNS WHERE OPENINGS OR PENETRATIONS OCCUR. USE L2 1/2x2 1/2x1/4 WELDED TO COLUMNS OR FRAMING MEMBERS FOR CONDITIONS WHERE NO OPENINGS OR PENETRATIONS OCCUR AND FOR IRREGULAR SHAPED CONDITIONS.	

INTERIOR COLUMN SHOWN
EXTERIOR COLUMN SIMILAR

4 TYPICAL DECK SUPPORT AT COLUMNS
S009 Scale: 3/4" = 1'-0"

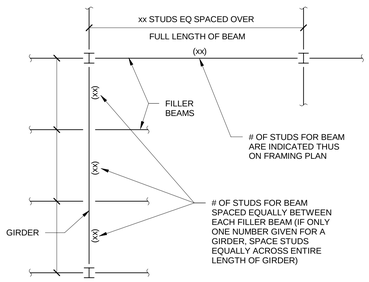

5 TYPICAL SHEAR STUD LAYOUT
S009 Scale: 1/2" = 1'-0"

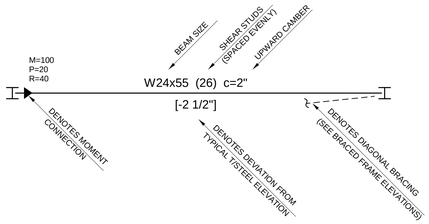

R=XX INDICATES FACTORED VERTICAL SHEAR IN KIPS
M=XX INDICATES FACTORED END MOMENT IN KIP-FEET
P=XX INDICATES FACTORED AXIAL LOAD AND JOINT TRANSFER FORCE IN KIPS

NOTE: IF FORCES NOT PROVIDED, DESIGN CONNECTIONS PER FORCES GIVEN IN GENERAL NOTES.

6 BEAM NOTATION LEGEND
S009 Scale: 3/4" = 1'-0"

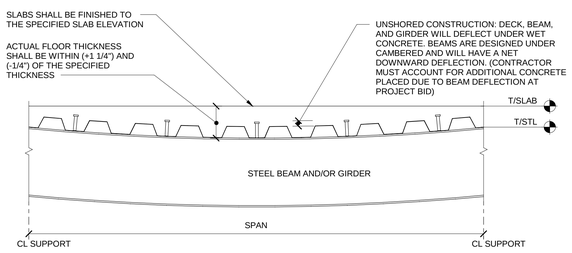

7 DEFLECTION UNDER WEIGHT OF WET CONCRETE
S009 Scale: 3/4" = 1'-0"

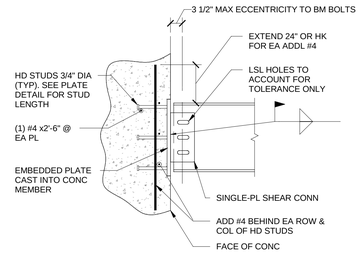

8 TYPICAL EMBEDDED CONN PLATE SECTION
S009 Scale: 3/4" = 1'-0"

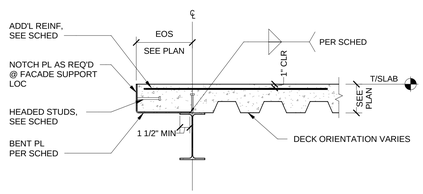

SLAB EDGE PLATE & REINFORCING SCHEDULE				
EOS	PLATE THICKNESS	STUDS OR DBAS	BENT PL WELD	ADD'L REINF
UP TO 1'-0"	1/4"	1/2"Ø x 0'-6" LG HEADED STUDS @ 12" OC	3/16 3-12	#3 x 3'-0" LG + 90° HK @ 12" OC
1'-0" TO 2'-0"	5/16"	1/2"Ø x 0'-6" LG HEADED STUDS @ 18" OC	3/16 3-12	#5 x 4'-0" LG + 90° HK @ 12" OC

CONTRACTOR'S OPTION: THE 5/16" BENT PLATE WITH STUDS AT 18" OC MAY BE USED FOR SMALLER EOS CONDITIONS IN LIEU OF THE THINNER PLATE AND STUDS AT 12" OC.

9 TYPICAL EXTERIOR SLAB EDGE LESS THAN 24"
S009 Scale: 3/4" = 1'-0"

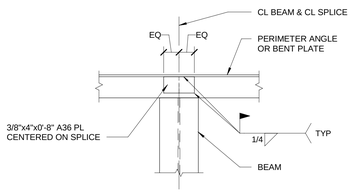

ENGINEER NOTE: COORD SPLICE PLATE AND WELD SIZE WITH DIAPHRAGM CHORD FORCE

10 TYPICAL PERIMETER ANGLE/BENT PLATE SPLICE
S009 Scale: 3/4" = 1'-0"

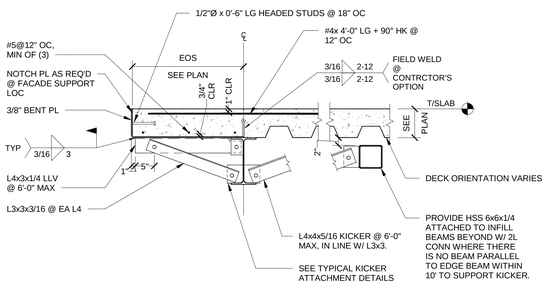

11 TYPICAL SLAB EDGE W/ EOS EQUAL OR GREATER THAN 24"
S009 Scale: 3/4" = 1'-0"

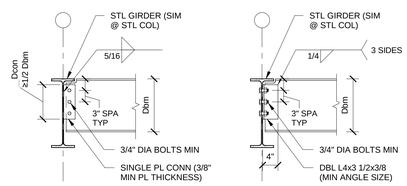

STD SINGLE PLATE **STD DOUBLT ANGLE**

NOTES:
1. REFERENCE ALL STRUCTURAL DRAWINGS FOR ADDITIONAL REQUIREMENTS REGARDING CONNECTIONS.
2. REFERENCE GENERAL NOTES & DRAWINGS FOR ADDITIONAL INFORMATION REGARDING CONNECTION DESIGN LOADS. THIS DETAIL REPRESENTS THE MINIMUM REQUIREMENTS. PROVIDE ADDITIONAL BOLTS OR LARGER PLATES, ANGLES, AND WELDS IF REQUIRED TO RESIST DESIGN LOADS.
3. ALL GIRDERS, PERIMETER BEAMS, BEAMS AT COLUMNS & BEAMS WHICH SUPPORT MECHANICAL UNITS AND THEIR SUPPORTING MEMBERS SHALL BE STANDARD DOUBLE ANGLE CONNECTIONS. USE OF SINGLE PLATE SHEAR CONNECTIONS MAY BE ALLOWED SUBJECT TO THE CONTRACTING OFFICER APPROVAL IN LOCATIONS WHERE DOUBLE ANGLE CONNECTIONS ARE NOT PRACTICAL. CONTRACTOR SHALL SUBMIT LOCATIONS WHERE SINGLE SHEAR PLATE CONNECTIONS ARE DEEMED NECESSARY TO THE CONTRACTING OFFICER FOR APPROVAL PRIOR TO SUBMITTING SHOP DRAWINGS.
4. MINIMUM NUMBER OF BOLTS FOR STANDARD SINGLE PLATE (SP) AND DOUBLE ANGLE (DA) CONNECTION ARE AS FOLLOWS:

BEAM	SP	DA
ALL W8	2 BOLTS	2 BOLTS
ALL W10	2 BOLTS	2 BOLTS
ALL W12	3 BOLTS	2 BOLTS
ALL W14	4 BOLTS	3 BOLTS
ALL W16	4 BOLTS	3 BOLTS
ALL W18	5 BOLTS	4 BOLTS
ALL W21	6 BOLTS	5 BOLTS
ALL W24	7 BOLTS	6 BOLTS
ALL W27	8 BOLTS	7 BOLTS
ALL W30	9 BOLTS	8 BOLTS
ALL W33	10 BOLTS	9 BOLTS

12 TYPICAL SHEAR CONNECTIONS
S009 Scale: 3/4" = 1'-0"

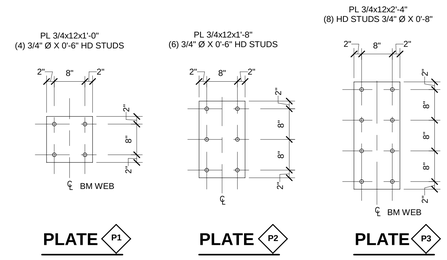

EMBEDDED PLATE CONNECTION SCHEDULE	
BEAM SIZE	***PLATE TYPE **H=12"
ALL W8	P1
ALL W10	P1
ALL W12	P2
ALL W14	P2
ALL W16	P2
ALL W18	P3
ALL W21	P3
ALL W24	P3

** H = MIN CONCRETE MEMBER THICKNESS
*** = TYPICAL PLATE UNO ON PLAN

13 TYPICAL EMBEDDED CONN PLATE DETAILS AND SCHEDULE
S009 Scale: 3/4" = 1'-0"

N

This drawing has been prepared for the use of AECOM's client and may not be used, reproduced or relied upon by third parties, except as agreed by AECOM and its client, as required by law or for use by governmental reviewing agencies. AECOM accepts no responsibility, and denies any liability whatsoever, to any party that modifies this drawing without AECOM's express written consent. Do not scale this document. All measurements must be obtained from the stated dimensions.

©2023 AECOM Corporation

AECOM

PROJECT
NEW SECURITY FORCES BUILDING
PAYNE BLVD.
CHARLOTTE, NORTH CAROLINA 28208

CLIENT
NORTH CAROLINA AIR NATIONAL GUARD - 145TH AIRLIFT WING
145th AIRLIFT WING
4930 MINUTEMAN WAY
CHARLOTTE, NORTH CAROLINA 28208

ARCHITECT/DESIGNER
AECOM
277 W NATIONWIDE BLVD
COLUMBUS, OH 43215
614-464-4500

http://www.aecom.com

CONSULTANTS

REGISTRATION

STATE OF OHIO
ANDREW L KNAPKE
9E-66697
REGISTERED PROFESSIONAL ENGINEER
5-30-25

ISSUE/REVISION

I/R	DATE	DESCRIPTION
	05/30/2025	B-3 SUBMITTAL - FINAL

PROJECT NUMBER
60637899
FJRP229030

SHEET TITLE
TYPICAL DETAILS

SHEET NUMBER
S009

ARCH E1 30"x42" Approved: AK Checked: PA Designer: AA Project Management Initials: MR
Last Plotted: 5/20/2025 4:16:53 PM
Filename: S:\M-360\FP-AAEDR (USA)\60637899-SFNCANG145th\60637899_SF-NC ANG_R21_S.rvt
Printed on ___% Post-Consumer Recycled Content Paper

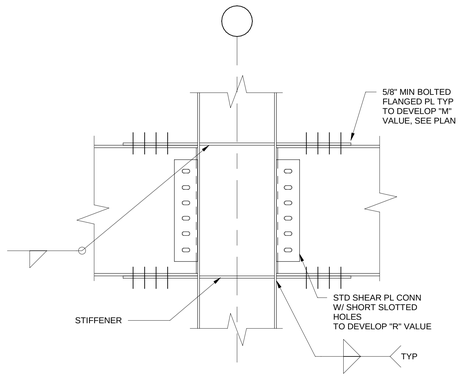

1 BEAM/COLUMN MOMENT CONNECTION
S010 Scale: NTS

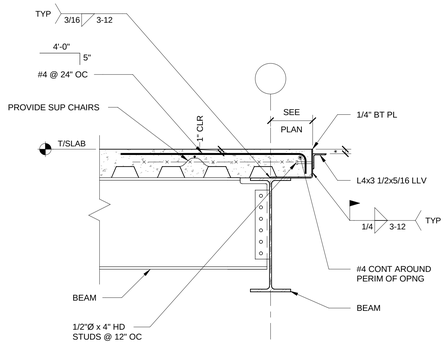

* - ELEVATOR SUPPLIER TO VERIFY SILL DETAIL AND DIMENSION.

NOTE: DECK MAY SPAN IN OPPOSITE DIRECTION.

2 TYPICAL ELEVATOR SILL DETAIL
S010 Scale: 3/4" = 1'-0"

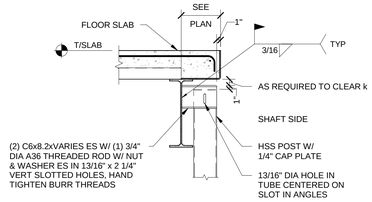

3 TYPICAL ELEVATOR RAIL TUBE DETAIL
S010 Scale: 3/4" = 1'-0"

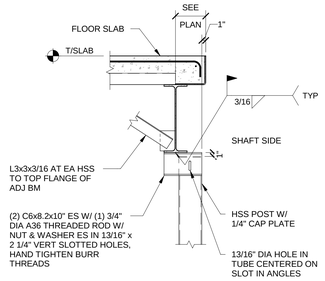

4 TYPICAL ELEVATOR RAIL TUBE DETAIL
S010 Scale: 3/4" = 1'-0"

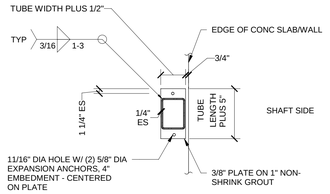

5 TYPICAL ELEVATOR RAIL TUBE DETAIL
S010 Scale: 3/4" = 1'-0"

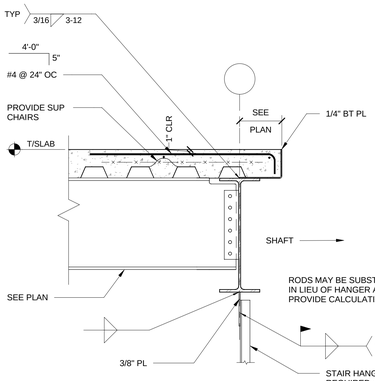

NOTE:
1. DECK MAY SPAN IN OPPOSITE DIRECTION.
2. STAIR HANGER TO BE CONCENTRIC WITH THE CENTERLINE OF THE SUPPORT BEAM. IF ECCENTRIC HANGERS ARE PROPOSED, OBTAIN APPROVAL OF THE CONTRACTING OFFICER. STAIR SUPPLIER/INSTALLER TO DESIGN AND INSTALL ADDITIONAL KICKERS TO TOP FLANGE OF ADJACENT BEAM TO SUPPORT THE ECCENTRIC LOAD.
3. CONNECT STAIR HANGERS AND STRINGERS TO STEEL BEAMS ONLY. CONNECTION TO SLAB OR DECK IS NOT PERMITTED.

6 TYPICAL STAIR HANGER DETAIL
S010 Scale: 3/4" = 1'-0"

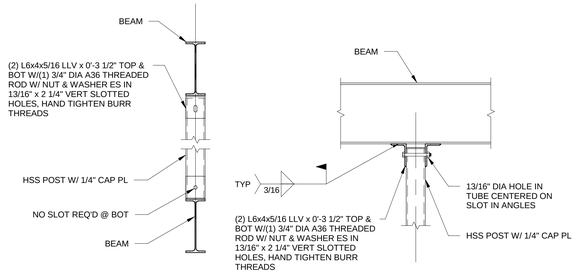

7 TYPICAL CONNECTIONS OF WF AND HSS IN ELEVATOR SHAFTS
S010 Scale: 3/4" = 1'-0"

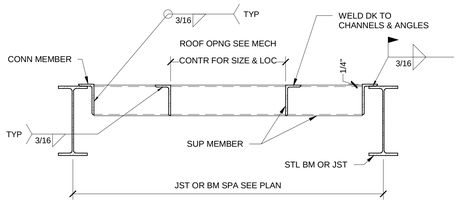

JOIST SPACING	LOAD	SUPPORTING MEMBER	CONNECTING MEMBER
MAX 6'-0"	MAX 300#	L3x3x1/4	L3x3x1/4x0'-6"
MAX 6'-0"	GREATER THAN 300# BUT MAX 1000#	L5x3x1/4 LLV	L5x3x1/4 LLV x 6"
GREATER THAN 6'-0"	MAX 1000#	L5x3x1/4 LLV	L5x3x1/4 LLV x 6"
GREATER THAN 6'-0"	GREATER THAN 1000# BUT MAX 2200#	C6x8.2	BENT PL 8x3x1/4 LLV x 8"

NOTES:
1. DETAIL APPLIES AT ROOF OPENINGS GREATER THAN 18" IN ANY DIRECTION AND AT ALL ROOF DRAINS (REGARDLESS OF ROOF DRAIN OPENING SIZE).
2. INDICATES ROOF OPENING ON PLAN (SEE ARCH AND MEP DRAWINGS FOR ADDITIONAL OPENINGS NOT SHOWN).
3. COORDINATE LOCATION & SIZE OF OPENINGS AND EQUIPMENT WITH ARCHITECTURAL DRAWINGS AND WITH MECHANICAL & ELECTRICAL CONTRACTORS.
4. PROVIDE JOIST REINFORCEMENT PER TYPICAL DETAIL IF SUPPORT REACTION OCCURS BETWEEN JOIST PANEL POINTS.
5. ALL WELDING TO JOISTS SHALL BE DONE WITH CARE SO AS NOT TO IMPAIR JOIST.

8 TYPICAL ROOF OPENING AND EQUIPMENT SUPPORT
S010 Scale: 3/4" = 1'-0"

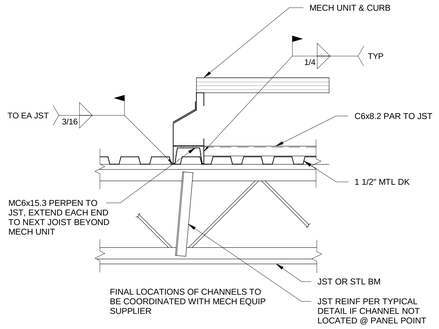

9 TYPICAL ROOF MOUNTED MECH OR OTHER MISC EQUIPMENT SUPPORT
S010 Scale: 1" = 1'-0"

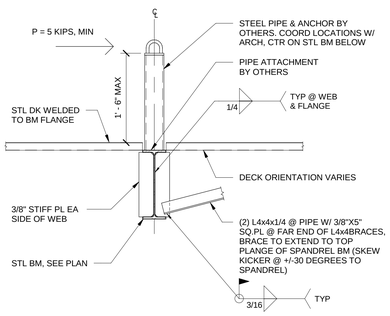

10 TYPICAL WINDOW WASHING TIE-OFF DETAIL
S010 Scale: 3/4" = 1'-0"

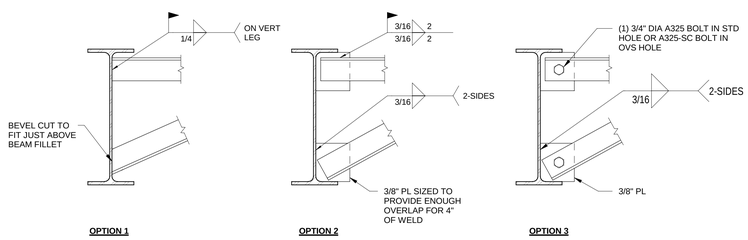

11 TYPICAL ANGLE KICKER CONNECTIONS
S010 Scale: 1 1/2" = 1'-0"

ARCH E1 30"x42" | Approved: AK | Checked: PA | Designer: AA | Project Management Initials: MR

Last Protect: 5/30/2025 4:16:54 PM
Filename: BM 60637899-SFNCANG145608378bk_SF-NC ANG_ER1_S-r4

Printed on ___% Post Consumer Recycled Content Paper

This drawing has been prepared for the use of AECOM's client and may not be used, reproduced or relied upon by third parties, except as agreed by AECOM and its client, as required by law or for uses by governmental reviewing agencies. AECOM accepts no responsibility, and denies any liability whatsoever, to any party that modifies this drawing without AECOM's express written consent. Do not scale this document. All measurements must be obtained from the stated dimensions.

AECOM

PROJECT
NEW SECURITY FORCES BUILDING
PAYNE BLVD.
CHARLOTTE, NORTH CAROLINA 28208

CLIENT
NORTH CAROLINA AIR NATIONAL GUARD - 145TH AIRLIFT WING
145th AIRLIFT WING
4930 MINUTEMAN WAY
CHARLOTTE, NORTH CAROLINA 28208

ARCHITECT/DESIGNER
AECOM
277 W NATIONWIDE BLVD
COLUMBUS, OH 43215
614-464-4500

http://www.aecom.com

CONSULTANTS

REGISTRATION

STATE OF OHIO
ANDREW L. KNAPKE
9E-66697
REGISTERED
PROFESSIONAL ENGINEER
5-30-25

ISSUE/REVISION

I/R	DATE	DESCRIPTION
	05/30/2025	B-3 SUBMITTAL - FINAL

PROJECT NUMBER
60637899
FJRP229030

SHEET TITLE
TYPICAL DETAILS

SHEET NUMBER
S010

N

©2023 AECOM Corporation

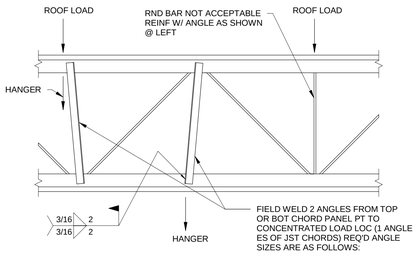

MODIFICATION IS TYP FOR ALL JST SUPPORTING LOAD FROM TOP OR BOT CHORD BTWN PANEL PTS, VERIFY LOC & # OF LOADS W/ ARCH, MECH, PLMB, & ELEC DWGS, ANGLES NOT REQ'D FOR CONCENTRATED LOADS LESS THAN 100 LBS

JOIST DEPTH	ANGLE SIZE
8" TO 24"	L1 1/2x1 1/2x3/16
26" TO 48"	L2x2x3/16
52" TO 72"	L3x3x1/4

1 TYPICAL JOIST MODIFICATION AT CONCENTRATED LOADS

S011 Scale: 3/4" = 1'-0"

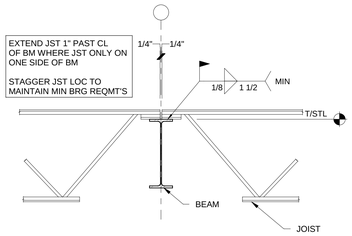

ENGINEER NOTE: CHECK UPLIFT CAPACITY OF WELD

2 TYPICAL JOIST ON STEEL BEAM

S011 Scale: 3/4" = 1'-0"

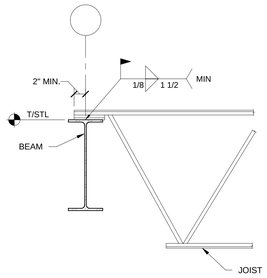

ENGINEER NOTE:
1. CHECK FOR TOP CHORD EXTEN REQUIREMENT
2. CHECK UPLIFT CAPACITY OF WELD

3 JOIST ON SPANDREL BEAM

S011 Scale: 3/4" = 1'-0"

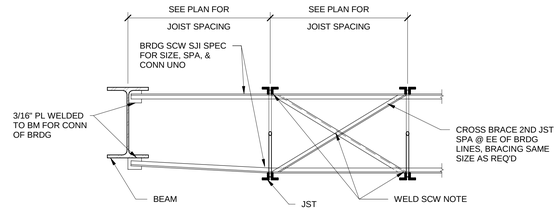

NOTE: ALL WELDING TO STEEL JOIST SHALL BE DONE SO AS NOT TO IMPAIR THE STRENGTH OF THE JOIST

4 TYPICAL JOIST BRIDGING-K SERIES

S011 Scale: 1" = 1'-0"

N

This drawing has been prepared for the use of AECOM's client and may not be used, reproduced or relied upon by third parties, except as agreed by AECOM and its client, as required by law or for use by governmental reviewing agencies. AECOM accepts no responsibility, and denies any liability whatsoever, to any party that modifies this drawing without AECOM's express written consent. Do not scale this document. All measurements must be obtained from the stated dimensions.

AECOM

PROJECT

NEW SECURITY FORCES BUILDING

PAYNE BLVD.
CHARLOTTE, NORTH CAROLINA 28208

CLIENT

NORTH CAROLINA AIR NATIONAL GUARD - 145TH AIRLIFT WING

145th AIRLIFT WING
4930 MINUTEMAN WAY
CHARLOTTE, NORTH CAROLINA 28208

ARCHITECT/DESIGNER

AECOM

277 W NATIONWIDE BLVD
COLUMBUS, OH 43215
614-464-4500

http://www.aecom.com

CONSULTANTS

REGISTRATION

STATE OF OHIO
ANDREW L KNAPKE
9E-66697
REGISTERED
PROFESSIONAL ENGINEER
5-30-25

ISSUE/REVISION

I/R	DATE	DESCRIPTION
	05/30/2025	B-3 SUBMITTAL - FINAL

PROJECT NUMBER

60637899
FJRP229030

SHEET TITLE

TYPICAL DETAILS

SHEET NUMBER

S011

©2023 AECOM Corporation

ARCH E1 30"x42" Approved: AK Checked: PA Designer: AA Project Management Initials: MR
Last Plotted: 5/29/2025 4:16:59 PM
Filename: 0M 3B0.0BP-AMER (USA) 60637899-SFNGCANGI145th60637899_SF-NC ANG_R31_S.rvt
Printed on ____% Post-Consumer Recycled Content Paper

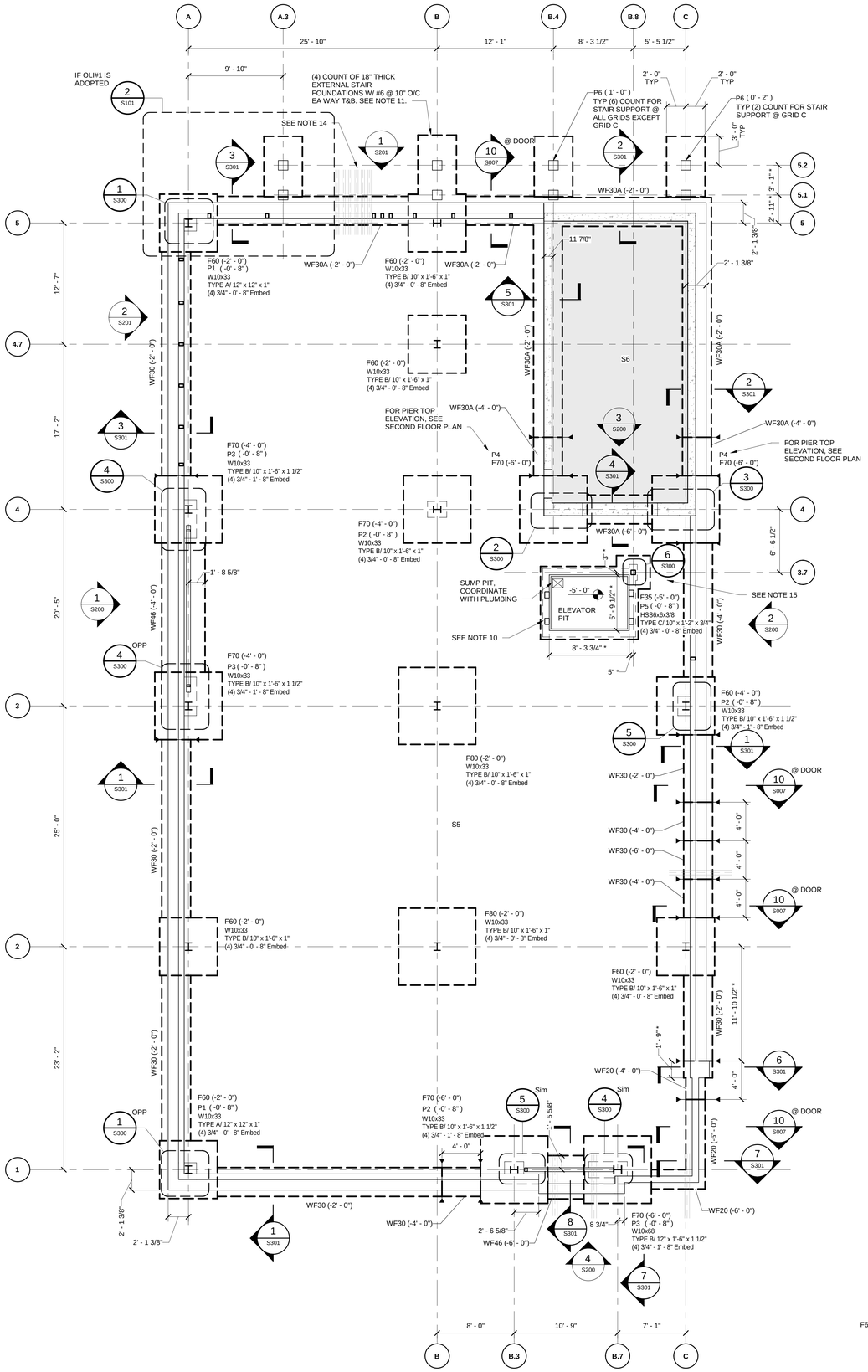

1 S101 **FOUNDATION PLAN**
Scale: 3/16" = 1'-0"

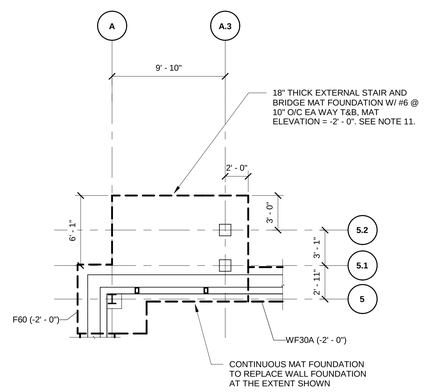

2 S101 **BRIDGE & STAIR FDN IF OL#1 IS ADOPTED**
Scale: 3/16" = 1'-0"

FOUNDATION PLAN LEGEND:

- INDICATES FOOTING STEP IN PLAN.
- INDICATES SLAB-ON-GRADE CONTROL/CONSTRUCTION JOINT.
- INDICATES STEP IN SLAB
- (XX'-X") INDICATES TOP OF FOOTING, PIER, GRADE BEAM, ETC. RELATIVE TO TOP OF SLAB ELEVATION NOTED IN PLAN NOTES.
- S# INDICATES SLAB-ON-GRADE & ROOF/FLOOR CONSTRUCTION.
- W## INDICATES WALL MARK ON PLAN. SEE SCHEDULE.
- F## INDICATES FOOTING ON PLAN. SEE SCHEDULE.
- WF## INDICATES WALL FOOTING ON PLAN. SEE SCHEDULE.
- P# INDICATES PIER. SEE PIER DETAILS.
- GB# INDICATES GRADE BEAM. SEE SECTION FOR DETAILS.
- INDICATES OPENING. COORDINATE SIZE AND LOCATION WITH MECHANICAL AND ARCHITECTURAL REQUIREMENTS AND DRAWINGS.
- INDICATES APPROXIMATE PIPE PENETRATION LOCATION IN FOUNDATION WALL. FOUNDATIONS ARE LOWERED TO ALLOW FOR PENETRATION WITHIN WALL. VERIFY EXACT LOCATION WITH CIVIL/PLUMBING AND WITH EXISTING SITE CONDITIONS PRIOR TO CASTING WALL. PROVIDE SLEEVES AS REQUIRED. DO NOT CORE DRILL. INFORM THE CONTRACTING OFFICER AND AWAIT DIRECTION IF PIPES CLASH WITH FOUNDATIONS OR OTHER STRUCTURAL MEMBERS, OR IF ADDITIONAL PIPES ARE REQUIRED.
- * INDICATES DIMENSION TO BE COORDINATED WITH OTHER DISCIPLINES AND/OR EQUIPMENT MANUFACTURER

COLUMN LABEL LEGEND:

INDICATES BASE PLATE TYPE, SEE 7 / S300
INDICATES COLUMN SIZE
[XXXXXX] TYPE X/ B x N x t
(#) #"- #" - ##
INDICATES BASE PLATE DIMENSIONS. "B" AND "N" AS DEFINED IN AND "t" REFERS 7 / S300 TO BASE PLATE THICKNESS.
INDICATES NUMBER OF ANCHORS
INDICATES ANCHOR DIA
INDICATES ANCHOR EMBEDMENT

FOUNDATION PLAN NOTES:

1. FLOOR CONSTRUCTION, UNO:
   A. SLABS ON GRADE LABELED AS S5 = 5" SLAB ON GRADE WITH 6x6-W2.9xW2.9 WWF
   B. SHADED FLOOR REGIONS LABELED AS S6 = 6" SLAB ON GRADE WITH #4 @ 9" OC TOP AND BOTTOM REINF EA WAY
   C. SEE TYPICAL SLAB-ON-GRADE CONSTRUCTION DETAIL FOR ADDITIONAL REQUIREMENTS.
2. TYPICAL ELEVATIONS, UNO:
   A. TOP OF SLAB-ON-GRADE ELEVATION = 0'-0" BASED ON USGS DATUM ELEVATION 711.75' = 0'-0".
   B. TOP OF FOUNDATION WALL ELEVATION = 0'-0" UNO.
3. ALL WALLS AND COLUMNS ARE CENTERED ON FOOTINGS UNO.
4. SEE GENERAL NOTES FOR DESIGN SOIL BEARING CAPACITY.
5. REINFORCING SHOWN ON PLAN IS IN ADDITION TO REINFORCING SHOWN IN SECTIONS, DETAILS, AND SCHEDULES.
6. SEE ARCHITECTURAL DRAWINGS FOR INTERIOR WALL DIMENSIONS.
7. VERIFY LOCATIONS OF COLUMNS, WALLS, OPENINGS, ETC. WITH ARCHITECTURAL DRAWINGS BEFORE PLACING FOUNDATIONS.
8. SLOPE SLABS TO FLOOR DRAINS, COORDINATE WITH ARCHITECTURAL AND PLUMBING DRAWINGS.
9. COORDINATE WITH ALL DRAWINGS FOR LOCATION OF OPENINGS, SLEEVES, AND UNDER FLOOR PIPES, CONDUITS, DRAINS, DEPRESSIONS, ETC.
10. (4) HSS 8x4x3/8 ELEVATOR VERTICAL RAIL SUPPORT ON FIRST AND SECOND FLOORS. SIZE, NUMBER, AND LOCATION ARE PRESUMPTIVE PENDING FINAL ELEVATOR SUPPLIER CONFIRMATION ON REQUIREMENTS. COORDINATE WITH SUPPLIER FOR SIZE AND LOCATION. SEE TYPICAL ELEVATOR DETAILS ON S010. TYPICAL DETAILS ARE SUBJECT TO ADJUSTMENT FOLLOWING SUPPLIER CONFIRMATION.
11. STAIR AND BRIDGE DESIGNERS SHALL PROVIDE CONTRACTING OFFICER WITH FINAL LOADS FOR FINAL FOUNDATION DESIGN VERIFICATION.
12. SEE CIVIL/ARCH FOR COMMUNICATIONS TOWER LOCATION. THE TOWER AND ITS FOUNDATIONS SHALL BE FULLY DESIGNED BY THE COMMUNICATIONS TOWER SUPPLIER. THE SUPPLIER SHALL BASE THEIR FOUNDATION DESIGN ON THE SUBSURFACE INVESTIGATION REPORT REFERENCED IN THE GENERAL NOTES. THE SUPPLIER SHALL PROVIDE COMPLETE DRAWINGS AND CALCULATIONS SEALED AND STAMPED BY A REGISTERED ENGINEER FOR THE CONTRACTING OFFICER'S REVIEW. THE EDGE OF THE FOUNDATION SHALL BE AT LEAST TEN FEET FROM HILL CREST. REFER TO SUBSURFACE INVESTIGATION REPORT FOR MORE INFORMATION.
13. SEE ARCH FOR EXACT LOCATION OF EXTERNAL STAIR. THE STAIR SHALL BE DESIGNED AND DETAILED BY THE STAIR SUPPLIER. THE SUPPLIER SHALL PROVIDE COMPLETE DRAWINGS AND CALCULATIONS SEALED AND STAMPED BY A REGISTERED ENGINEER FOR THE CONTRACTING OFFICER'S REVIEW. STAIR FOUNDATION AND ITS CONCRETE PIER LOCATION MAY BE ADJUSTED BY +/- 0' - 6" UPON CONTRACTING OFFICER'S APPROVAL. HOWEVER, FINAL FOUNDATION AND PIER LOCATIONS SHALL BE COORDINATED WITH MAIN BUILDING FOUNDATIONS PRIOR TO POURING MAIN BUILDING FOUNDATIONS. THE STAIR SHALL BE STRUCTURALLY INDEPENDENT FROM THE MAIN BUILDING WITH A MINIMUM OF TWO INCH EXPANSION JOINT SEPARATING THE STAIR LANDING FROM THE LOW ROOF.
14. PROVIDE AT LEAST 4" CLEAR GAP BETWEEN TELECOM CONDUITS AND AT LEAST ONE FOOT OF CONCRETE COVER IN WALL ABOVE THE CONDUITS. PROVIDE ADDITIONAL REINFORCEMENT AROUND THE WHOLE BLOCK OF CONCRETE WALL THAT WILL BE PENTRATED BY ALL THE CONDUITS AS PER 9 / S007
15. SUPPORT INTERNAL STAIR LOWER LANDING WITH VERTICAL POSTS. THE POSTS AND STRINGER ENDS AT GROUND FLOOR TO BE SUPPORTED BY THICKENED SLAB AS PER 4 / S008. TOP STRNGER TO BE SUPPORTED BY BEAMS ON SECOND FLOOR. SUBMIT METAL STAIR SYSTEM SHOP DRAWINGS AND CALCULATIONS, INCLUDING CONNECTIONS, FOR REVIEW. DRAWINGS AND CALCULATIONS MUST BE SEALED AND STAMPED BY A REGISTERED ENGINEER.
16. REFERENCES:
   A. ABBREVIATIONS - S001
   B. GENERAL STRUCTURAL NOTES - S002 & S003
   C. TYPICAL DETAILS - S007 THRU S011
   D. FOOTING SCHEDULE - S101
   E. PIER DETAILS - S300
   F. VERTICAL BRACING ELEVATIONS - S200
   G. COLUMN BASE PLATE DETAILS - S300

CONCRETE COLUMN & PIER SCHEDULE

MARK	SIZE	REINFORCING		REMARKS
		VERTICAL REINFORCING	TIES	
P1	1'-8" x 1'-8"	(12) #6	#4 @ 8" OC	
P2	2'-0" x 1'-8"	(12) #6	#4 @ 8" OC	HOOK BARS T&B
P3	4'-0" x 1'-8"	(22) #6	#4 @ 8" OC	HOOK BARS T&B
P4	4'-0" x 1'-4"	(20) #6	#4 @ 8" OC	HOOK BARS T&B
P5	1'-8" x 0'-10"	(6) #5	#4 @ 12" OC	
P6	1'-0" x 1'-0"	(4) #6	#4 @ 12" OC	HOOK BARS T&B

SPREAD FOOTING SCHEDULE

MARK	DIMENSIONS			REINFORCING	REMARKS
	WIDTH	LENGTH	THICKNESS		
F35	3' - 6"	3' - 6"	1' - 0"	(4) #6 EWB	
F60	6' - 0"	6' - 0"	1' - 6"	(6) #6 EWB	
F70	7' - 0"	7' - 0"	1' - 6"	(7) #6 EW T&B	
F80	8' - 0"	8' - 0"	1' - 6"	(8) #7 EWB	

WALL FOOTING SCHEDULE

MARK	DIMENSIONS		REINFORCING		REMARKS
	WIDTH	THICKNESS	LONGITUDINAL	TRANSVERSE	
WF20	2' - 0"	1' - 0"	(3) # 5 BOT	#4 @ 8" OC BOT	
WF30	3' - 0"	1' - 0"	(4) # 5 BOT	#4 @ 8" OC BOT	
WF30A	3' - 0"	1' - 0"	(4) # 5 T&B	#4 @8" OC T&B	
WF46	4' - 6"	1' - 0"	(6) #5 T&B	#4 @8" OC T&B	

This drawing has been prepared for the use of AECOM's client and may not be used, reproduced or relied upon by third parties, except as agreed by AECOM and its client, as required by law or for use by governmental reviewing agencies. AECOM accepts no responsibility, and denies any liability whatsoever, to any party that modifies this drawing without AECOM's express written consent. Do not scale this document. All measurements must be obtained from the stated dimensions.

AECOM

PROJECT
NEW SECURITY FORCES BUILDING
PAYNE BLVD.
CHARLOTTE, NORTH CAROLINA 28208

CLIENT
NORTH CAROLINA AIR NATIONAL GUARD - 145TH AIRLIFT WING
145th AIRLIFT WING
4930 MINUTEMAN WAY
CHARLOTTE, NORTH CAROLINA 28208

ARCHITECT/DESIGNER
AECOM
277 W NATIONWIDE BLVD
COLUMBUS, OH 43215
614-464-4500

http://www.aecom.com

CONSULTANTS

REGISTRATION

STATE OF OHIO
ANDREW L KNAPKE
9E-66697
REGISTERED
PROFESSIONAL ENGINEER
5-30-25

ISSUE/REVISION

I/R	DATE	DESCRIPTION
	05/30/2025	B-3 SUBMITTAL - FINAL

PROJECT NUMBER
60637899
FJRP229030

SHEET TITLE
STRUCTURAL FOUNDATION PLAN

SHEET NUMBER
S101

©2023 AECOM Corporation

ARCH E1 30"x42" Approved: AK Checked: PA Designer: AA Project Management Initials: MR

Last Plotted: 5/20/2025 4:16:56 PM
Filename: E:\M-360\ISP-AAEDR\CSA\ 60637899-SFNCANG145\60637899_SF-NC ANG_R23_S.rvt

Printed on ___% Post-Consumer Recycled Content Paper

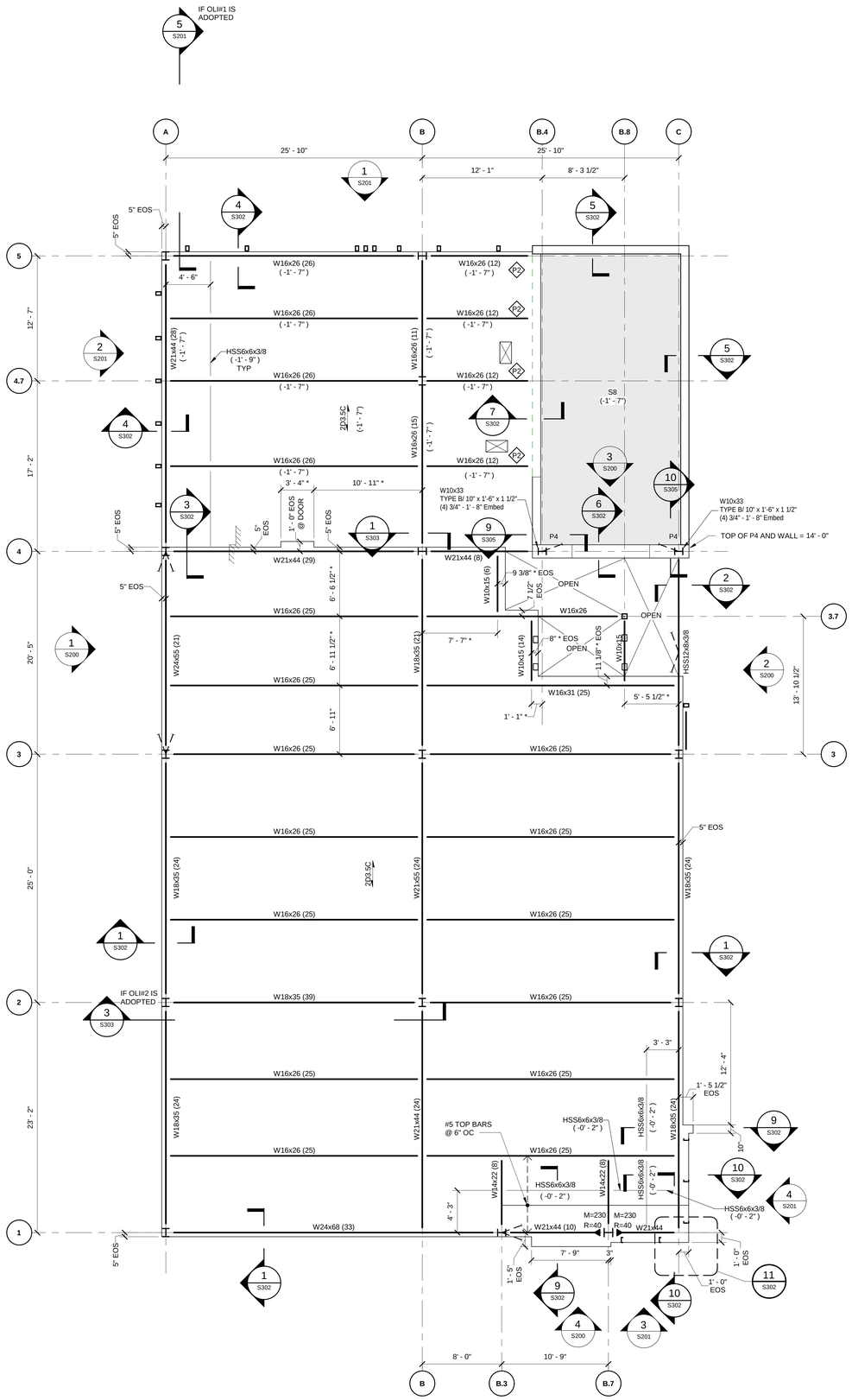

1 S102 — **SECOND FLOOR FRAMING PLAN**

Scale: 3/16" = 1'-0"

SECOND FLOOR STEEL FRAMING PLAN NOTES:

1. FLOOR CONSTRUCTION:
   A. FLOORS LABELED AS 2D3.5C = 3 1/2" CONCRETE SLAB WITH 4.5LB/CY SYNTHETIC MACRO-FIBER REINFORCING ON 2"x 20 GAGE GALVANIZED COMPOSITE STEEL DECK WELDED TO SUPPORT STEEL. TOTAL SLAB THICKNESS = 5 1/2".
   B. SHADED FLOOR REGIONS LABELED AS S8 ON PLAN INDICATE 8" THICK CONCRETE SLAB WITH #6 @ 8" OC TOP AND BOTTOM EA WAY REINF.
2. TYPICAL ELEVATIONS, UNO:
   A. TOP OF STEEL REFERENCE ELEVATION = 13' - 6 1/2" UNLESS NOTED THUS (± ##' - ##"), WHICH INDICATES CHANGE IN ELEVATION FROM TOP OF STEEL REFERENCE ELEVATION.
   B. TOP OF SLAB REFERENCE ELEVATION = 14' - 0" UNLESS NOTED THUS (± ##' - ##"), WHICH INDICATES CHANGE IN ELEVATION FROM TOP OF SLAB REFERENCE ELEVATION.
3. BEAMS ARE UNIFORMLY SPACED BETWEEN COLUMNS OR INTERSECTING GIRDERS UNO.
4. COORDINATE WITH ALL DRAWINGS FOR LOCATION OF OPENINGS, SLEEVES, AND UNDER FLOOR PIPES, CONDUITS, DRAINS, DEPRESSIONS, ETC.
5. CENTER OF MEP OPENINGS IN VAULT WALL SHALL BE PLACED AT MIDPOINT BETWEEN BEAMS. DO NOT CORE DRILL WALLS. SEE 9 / S007 FOR ALL OPENINGS IN WALL, INCLDING DOORS AND WINDOWS.
6. REFERENCES:
   A. ABBREVIATIONS - S001
   B. GENERAL STRUCTURAL NOTES - S002 & S003
   C. TYPICAL DETAILS - S007 THRU S011
   D. PIER DETAILS - S300
   E. VERTICAL BRACING ELEVATIONS - S200
   F. COLUMN BASE PLATE DETAILS - S300

FRAMING PLAN LEGEND:

- INDICATES STEP OR CHANGE IN SLAB ELEVATION. SEE SECTION.
- S# — INDICATES ROOF/FLOOR CONSTRUCTION. SEE SCHEDULE.
- INDICATES FRAMED OPENING. COORDINATE SIZE AND LOCATION WITH MECHANICAL AND ARCHITECTURAL REQUIREMENTS AND DRAWINGS.
- INDICATES MOMENT CONNECTION ON PLAN. MOMENT CONNECTION SYMBOLS WITH THE LETTER "NS" BESIDE IT INDICATES A MOMENT CONNECTION THAT DOES NOT REQUIRE COLUMN STIFFENER PLATES.
- INDICATES SLAB OR DECK SPAN DIRECTION.
- * — INDICATES DIMENSION TO BE COORDINATED WITH OTHER DISCIPLINES AND/OR EQUIPMENT MANUFACTURER.
- P#1 — INDICATES EMBED PLATE LABEL, SEE 13 / S009 SEE RELEVANT SECTIONS FOR EMBED PLATES NOT LABELED ON PLAN.

N

This drawing has been prepared for the use of AECOM's client and may not be used, reproduced or relied upon by third parties, except as agreed by AECOM and its client, as required by law or for use by governmental reviewing agencies. AECOM accepts no responsibility, and denies any liability whatsoever, to any party that modifies this drawing without AECOM's express written consent. Do not scale this document. All measurements must be obtained from the stated dimensions.

AECOM

PROJECT

NEW SECURITY FORCES BUILDING

PAYNE BLVD.
CHARLOTTE, NORTH CAROLINA 28208

CLIENT

NORTH CAROLINA AIR NATIONAL GUARD - 145TH AIRLIFT WING

145th AIRLIFT WING
4930 MINUTEMAN WAY
CHARLOTTE, NORTH CAROLINA 28208

ARCHITECT/DESIGNER

AECOM

277 W NATIONWIDE BLVD
COLUMBUS, OH 43215
614-464-4500

http://www.aecom.com

CONSULTANTS

REGISTRATION

STATE OF OHIO
ANDREW L KNAPKE
9E-66697
REGISTERED PROFESSIONAL ENGINEER
5-30-25

ISSUE/REVISION

I/R	DATE	DESCRIPTION
	05/30/2025	B-3 SUBMITTAL - FINAL

PROJECT NUMBER

60637899
FJRP229030

SHEET TITLE

STRUCTURAL SECOND FLOOR FRAMING PLAN

SHEET NUMBER

S102

©2023 AECOM Corporation

ARCH E1 30"x42" Approved: AK Checked: PA Designer: AA Project Management Initials: MR

Last Plotted: 5/20/2025 4:16:57 PM
Filename: BM 360/BP-AMER (USA) 60637899 SFNC/ANG/145#063789_SF-NC ANG_R31_S-H

Printed on ____% Post-Consumer Recycled Content Paper

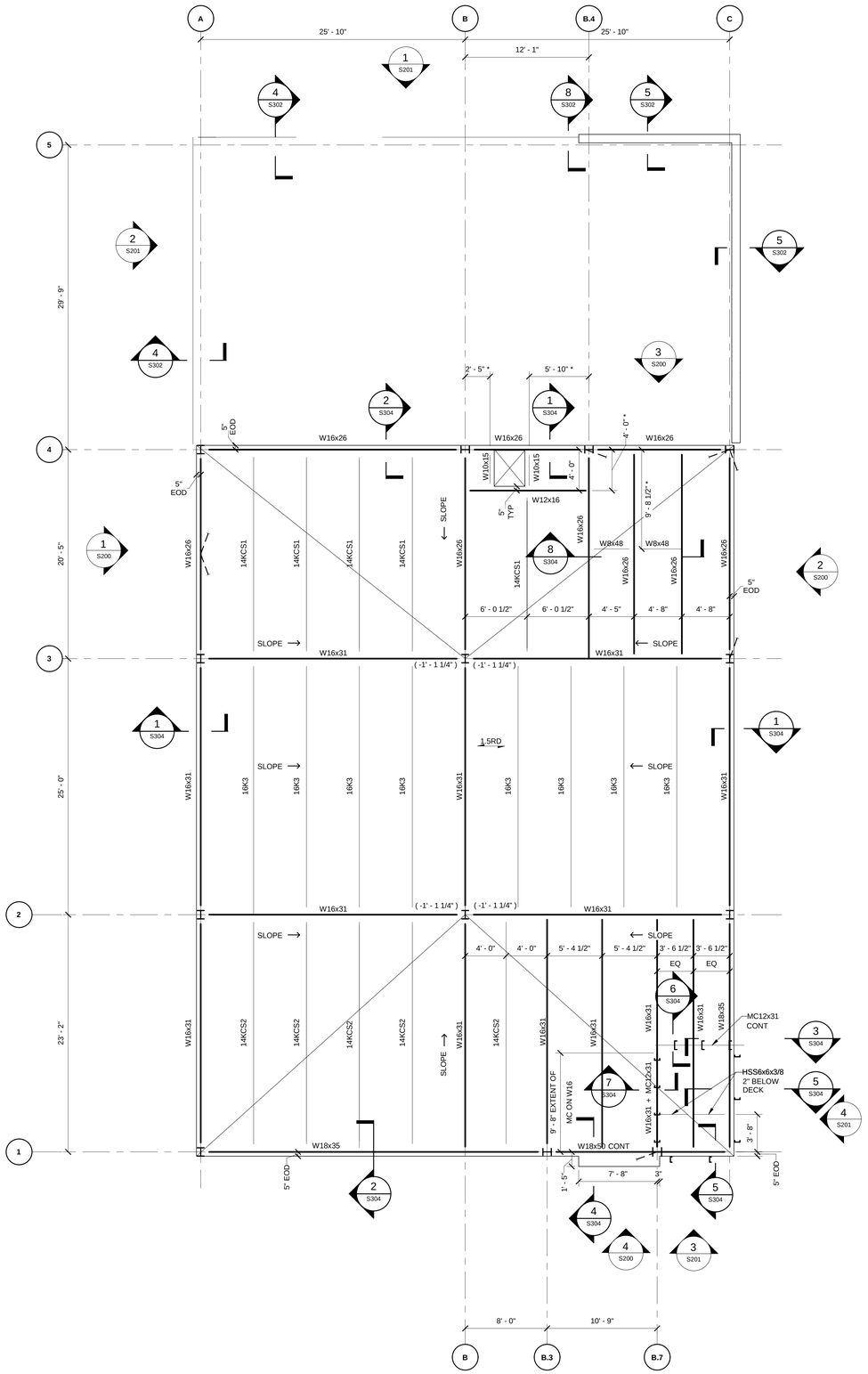

1 S103 **ROOF FRAMING PLAN**

Scale: 3/16" = 1'-0"

ROOF STEEL FRAMING PLAN NOTES:

1. ROOF CONSTRUCTION
   A. DECKS LABELED AS 1.5RD = 1 1/2" x 20 GAGE GALVANIZED METAL DECK.
2. TYPICAL ELEVATIONS
   A. TOP OF STEEL GIRDER REFERENCE ELEVATION = 28' - 2 1/2" UNLESS NOTED THUS (±), WHICH INDICATES CHANGE IN ELEVATION FROM TOP OF STEEL REFERENCE ELEVATION.
   B. TOP OF JOIST ELEVATION VARIES. TOP OF JOIST SEAT = +3 1/2" FROM SUPPORTING MEMBER.
   C. TOP OF BEAMS PARALLEL TO JOISTS ARE +3 1/2" HIGHER THAN SUPPORTING GIRDER ELEVATION.
   D. TOP OF STEEL DECK ELEVATION VARIES. SEE PLAN AND NOTES FOR TOP OF SUPPORTING MEMBER.
3. BEAMS ARE UNIFORMLY SPACED BETWEEN COLUMNS OR INTERSECTING GIRDERS UNO.
4. COORDINATE WITH ALL DRAWINGS FOR LOCATION OF OPENINGS, SLEEVES, AND UNDER FLOOR PIPES, CONDUITS, DRAINS, DEPRESSIONS, ETC.
5. REFERENCES:
   A. ABBREVIATIONS - S001
   B. GENERAL STRUCTURAL NOTES - S002 & S003
   C. TYPICAL DETAILS - S007 THRU S011
   D. VERTICAL BRACING ELEVATIONS - S200

FRAMING PLAN LEGEND:

	INDICATES STEP OR CHANGE IN SLAB ELEVATION. SEE SECTION.
S#	INDICATES ROOF/FLOOR CONSTRUCTION. SEE SCHEDULE.
	INDICATES FRAMED OPENING. COORDINATE SIZE AND LOCATION WITH MECHANICAL AND ARCHITECTURAL REQUIREMENTS AND DRAWINGS.
	INDICATES MOMENT CONNECTION ON PLAN. MOMENT CONNECTION SYMBOLS WITH THE LETTER "NS" BESIDE IT INDICATES A MOMENT CONNECTION THAT DOES NOT REQUIRE COLUMN STIFFENER PLATES.
	INDICATES SLAB OR DECK SPAN DIRECTION.
*	INDICATES DIMENSION TO BE COORDINATED WITH OTHER DISCIPLINES AND/OR EQUIPMENT MANUFACTURER.
EP#	INDICATES EMBED PLATE LABEL, SEE 13 / S009 SEE RELEVANT SECTIONS FOR EMBED PLATES NOT LABELED ON PLAN.

N

©2023 AECOM Corporation

AECOM

PROJECT

NEW SECURITY FORCES BUILDING

PAYNE BLVD.
CHARLOTTE, NORTH CAROLINA 28208

CLIENT

NORTH CAROLINA AIR NATIONAL GUARD - 145TH AIRLIFT WING

145th AIRLIFT WING
4930 MINUTEMAN WAY
CHARLOTTE, NORTH CAROLINA 28208

ARCHITECT/DESIGNER

AECOM

277 W NATIONWIDE BLVD
COLUMBUS, OH 43215
614-464-4500

http://www.aecom.com

CONSULTANTS

REGISTRATION

STATE OF OHIO
ANDREW L KNAPKE
9E-66697
REGISTERED PROFESSIONAL ENGINEER

5-30-25

ISSUE/REVISION

I/R	DATE	DESCRIPTION
	05/30/2025	B-3 SUBMITTAL - FINAL

PROJECT NUMBER

60637899
FJRP229030

SHEET TITLE

STRUCTURAL ROOF FRAMING PLAN

SHEET NUMBER

S103

This drawing has been prepared for the use of AECOM's client and may not be used, reproduced or relied upon by third parties, except as agreed by AECOM and its client, as required by law or for use by governmental reviewing agencies. AECOM accepts no responsibility, and denies any liability whatsoever, to any party that modifies this drawing without AECOM's express written consent. Do not scale this document. All measurements must be obtained from the stated dimensions.

ARCH E1 30"x42" Approved: AK Checked: PA Designer: AA Project Management Initials: MR

Last Plotted: 5/30/2025 4:16:58 PM
Filename: DIR 360/360-AMER\(USA)\60637899-SFNGCANG\145\60637899_SF-NC ANG_R31_S.rvt

Printed on ___% Post-Consumer Recycled Content Paper

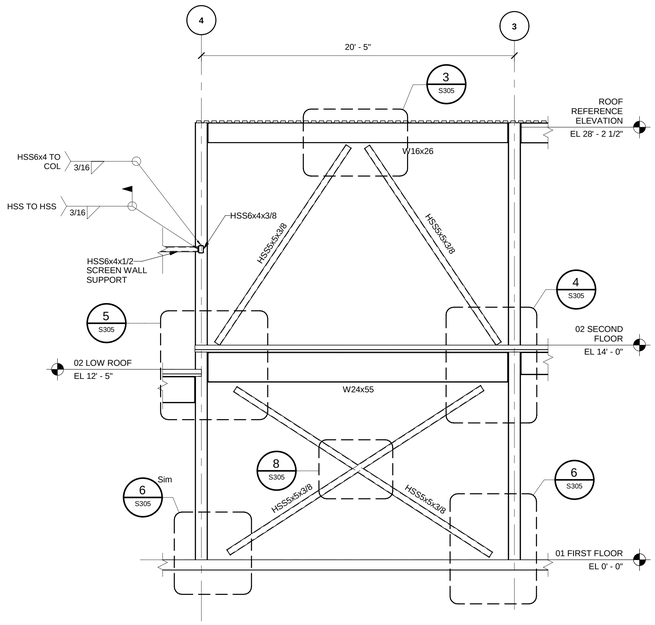

1 S200 **LINE A BRACED FRAME**
Scale: 1/4" = 1'-0"

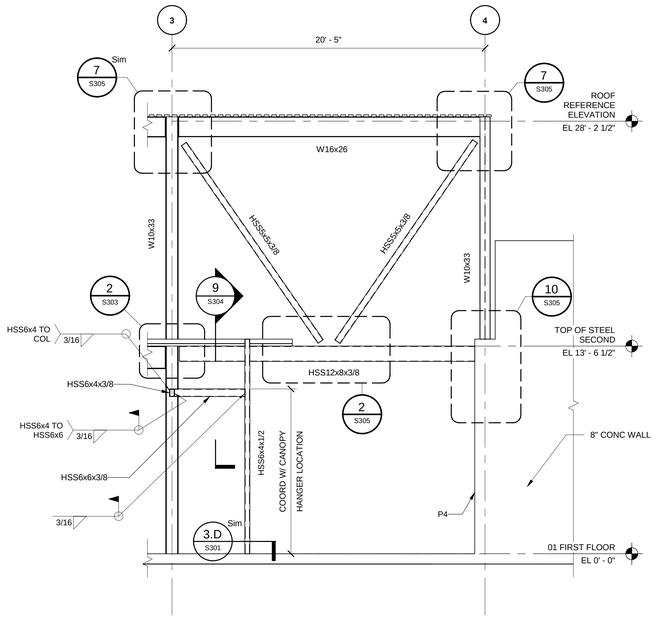

2 S200 **LINE C BRACED FRAME AND CANOPY SUPPORT**
Scale: 1/4" = 1'-0"

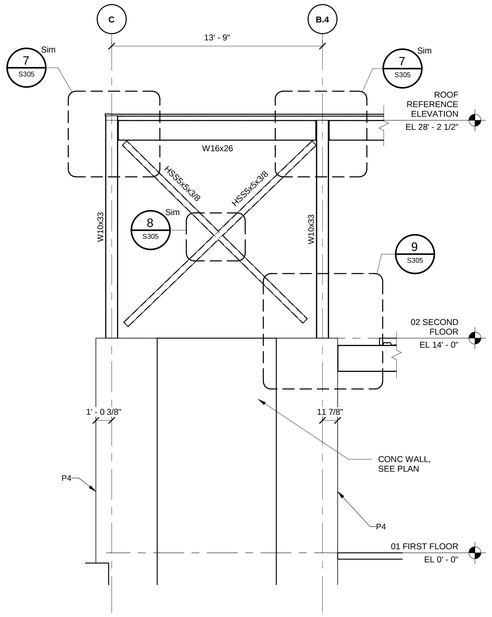

3 S200 **LINE 4 BRACED FRAME**
Scale: 1/4" = 1'-0"

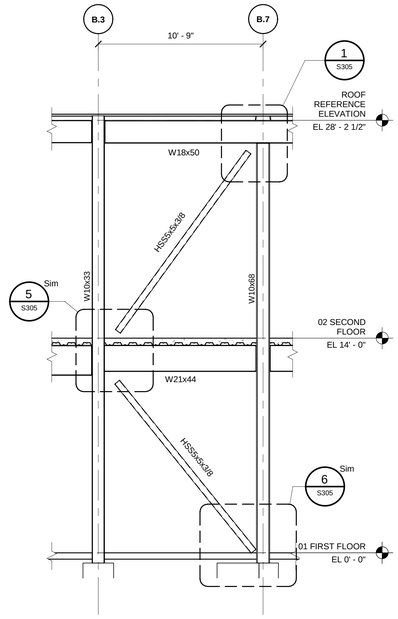

4 S200 **LINE 1 BRACED FRAME**
Scale: 1/4" = 1'-0"

BRACED FRAME NOTES:

1. CONNECTION DESIGN AND SUBMITTALS:
   A. PROVIDE PRETENSIONED JOINTS AT BRACE CONNECTIONS INDICATED TO BE BOLTED.
   B. PROVIDE ONE ERECTION BOLT(S) (MINIMUM) AT EACH END OF BRACES.
   C. PROVIDE FULL PENETRATION WELDS OF FLANGES FOR ALL BRACED FRAME COLUMN SPLICES.
2. BRACED FRAME GEOMETRY:
   A. TUBE SECTIONS SHALL BE ON COLUMN CENTERLINE. SLOT TUBE SECTIONS TO ACCOMMODATE GUSSET PLATES LOCATED ON COLUMN CENTERLINE.
   B. ALL FRAMING DETAILS SHALL BE CONFIGURED SUCH THAT CENTER OF GRAVITY FOR ALL MEMBERS INTERSECT AT A SINGLE, COMMON WORK POINT (I.E. NO CONNECTION ECCENTRICITY) UNLESS NOTED.
   C. ORIENT BRACE MEMBERS WITH STRONG AXIS VERTICAL, UNLESS NOTED.
3. MOST DETAILS SHOWN APPLY TO COLUMN MAJOR AXIS, SIMILAR DETAILS APPLY FOR MINOR AXIS CASE AND VICE VERSA.
4. SEE PLAN AND DETAILS FOR COLUMN BASE PLATES, ANCHOR BOLTS AND CAP PLATES.
5. SEE FRAMING PLANS FOR BEAM SIZES.

N

©2023 AECOM Corporation

This drawing has been prepared for the use of AECOM's client and may not be used, reproduced or relied upon by third parties, except as agreed by AECOM and its client, as required by law or for use by governmental reviewing agencies. AECOM accepts no responsibility, and denies any liability whatsoever, to any party that modifies this drawing without AECOM's express written consent. Do not scale this document. All measurements must be obtained from the stated dimensions.

AECOM

PROJECT
NEW SECURITY FORCES BUILDING
PAYNE BLVD.
CHARLOTTE, NORTH CAROLINA 28208

CLIENT
NORTH CAROLINA AIR NATIONAL GUARD - 145TH AIRLIFT WING
145th AIRLIFT WING
4930 MINUTEMAN WAY
CHARLOTTE, NORTH CAROLINA 28208

ARCHITECT/DESIGNER
AECOM
277 W NATIONWIDE BLVD
COLUMBUS, OH 43215
614-464-4500

http://www.aecom.com

CONSULTANTS

REGISTRATION

STATE OF OHIO
ANDREW L KNAPKE
9E-66697
REGISTERED PROFESSIONAL ENGINEER
5-30-25

ISSUE/REVISION

I/R	DATE	DESCRIPTION
	05/30/2025	B-3 SUBMITTAL - FINAL

PROJECT NUMBER
60637899
FJRP229030

SHEET TITLE
STRUCTURAL ELEVATIONS

SHEET NUMBER
S200

ARCH E1 30"x42" Approved: AK Checked: PA Designer: AA Project Management Initials: MR
Last Plotted: 5/30/2025 4:16:59 PM
Filename: 8A8-08BF-A8E2\(USA) 60637899-SFNCANG\145\60637899_SF-NC ANG_R31_S.rvt
Printed on ____% Post-Consumer Recycled Content Paper

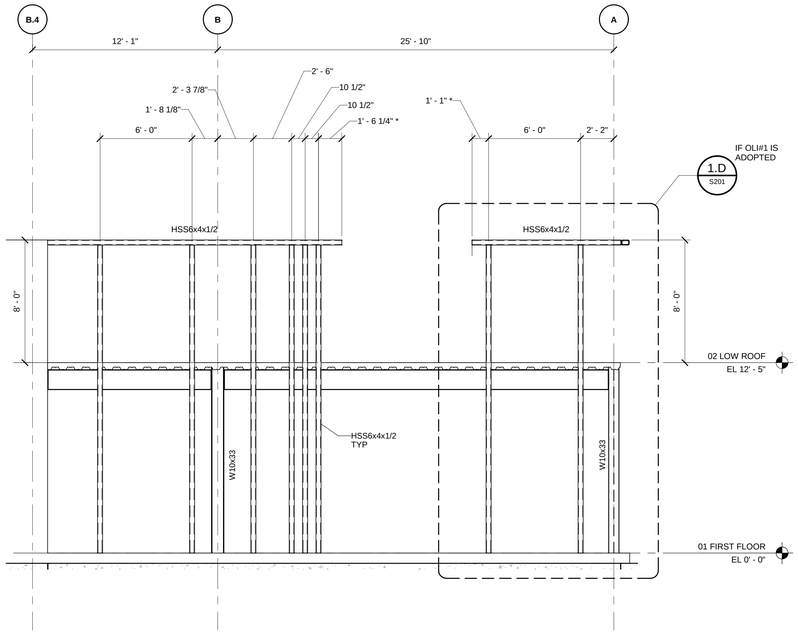

1 S201 **LINE 5 SCREEN WALL FRAMING**
Scale: 1/4" = 1'-0"

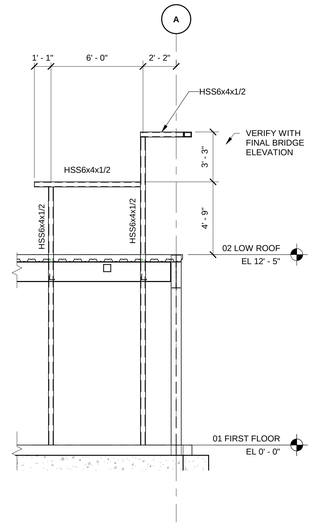

1.D S201 **LINE 5 SCREEN WALL FRAMING (OLI#1)**
Scale: 1/4" = 1'-0"

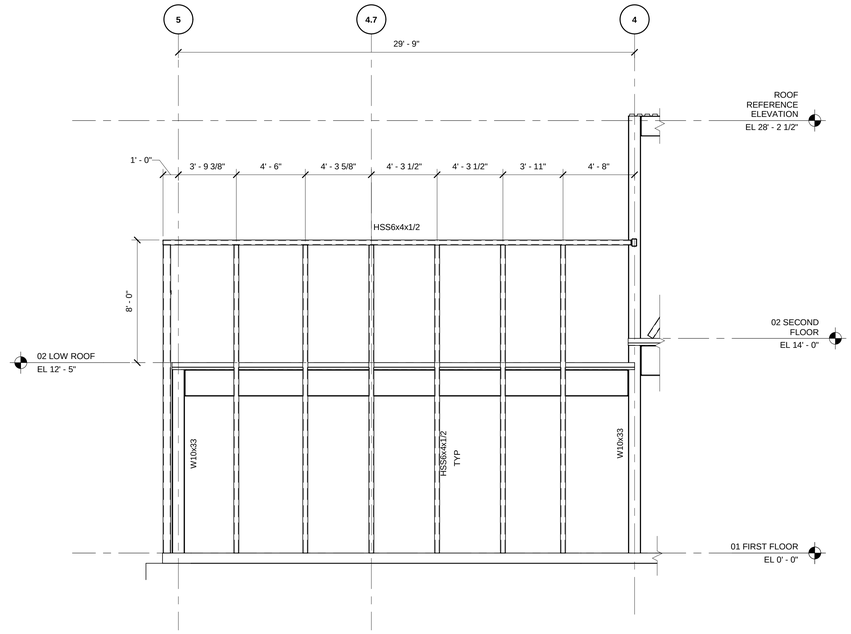

2 S201 **LINE A SCREEN WALL FRAMING**
Scale: 1/4" = 1'-0"

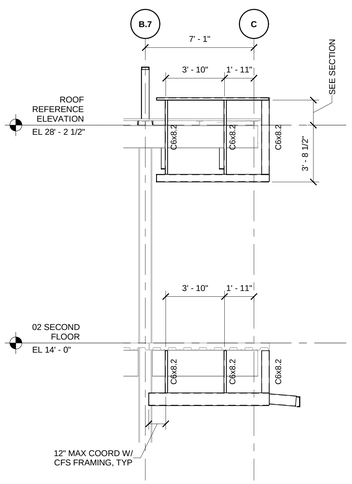

3 S201 **LINE 1 SECONDARY WALL FRAMING**
Scale: 1/4" = 1'-0"

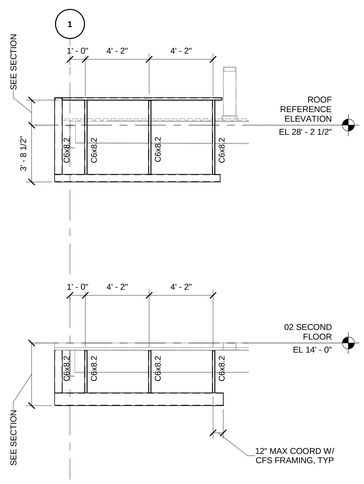

4 S201 **LINE C SECONDARY WALL FRAMING**
Scale: 1/4" = 1'-0"

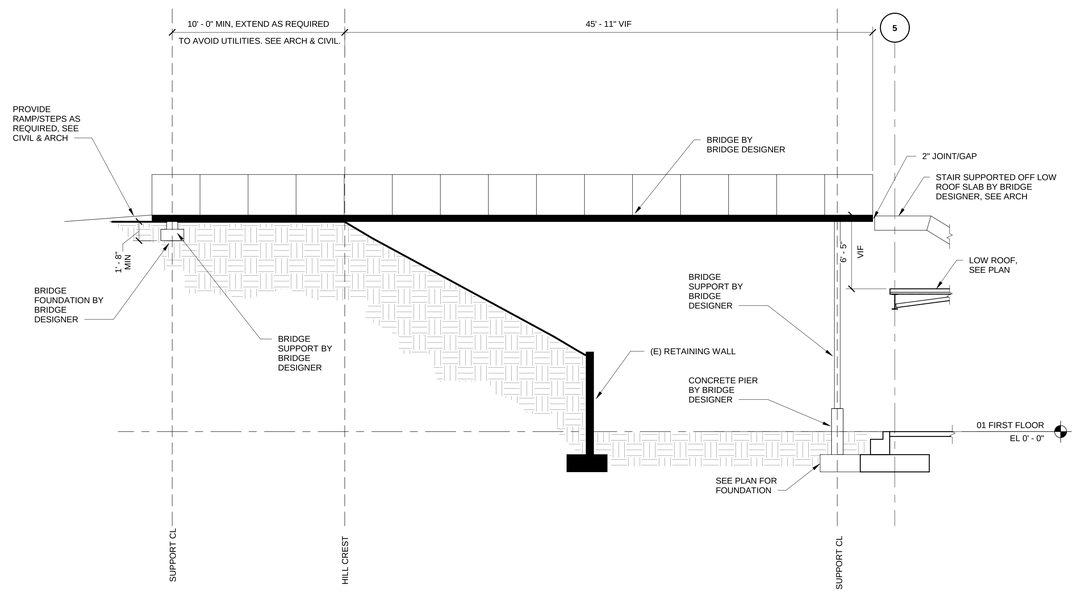

NOTES:

1. THE BRIDGE IS PART OF OPTIONAL LINE ITEM (OLI) #1.
2. THE COMPLETE DESIGN AND DETAILING OF THE BRIDGE SHALL BE THE RESPONSIBILITY OF THE CONTRACTOR. THE FOUNDATION UP HILL SHALL BE DESIGNED BY THE CONTRACTOR. THE FOUNDATION NEAR THE BUILDING IS SHOWN ON THE FOUNDATION PLANS. THE CONTRACTOR IS RESPONSIBLE FOR DESIGNING ANY CONCRETE PIERS REQUIRED. CONTRACTOR TO PROVIDE THE CONTRACTING OFFICER WITH REACTIONS ON PROVIDED FOUNDATION FOR FINAL VERIFICATION OF FOUNDATION DESIGN.
3. REFER TO ARCHITECTURE AND CIVIL DRAWINGS FOR MORE INFORMATION. REFER TO SUBSURFACE. INVESTIGATION REPORT REFERENCED IN GENERAL NOTES FOR GEOTECHNICAL INFORMATION.
4. SOIL UNDERCUT AT HILLTOP SHOULD EXTEND TO THE HILL SLOPE FACE TO PREVENT WATER FROM BEING TRAPPED BELOW FOUNDATIONS. SEE SUBSURFACE INVESTIGATION REPORT REGARDING REMOVAL AND REPLACEMENT OF SOILS FOR BRIDGE FOUNDATION AT HILLTOP.
5. SUBMIT DRAWINGS AND SUPPORTING CALCULATIONS, SIGNED AND SEALED BY A REGISTERED ENGINEER, SHOWING COMPLETE DESIGN AND DETAILING FOR THE CONTRACTING OFFICER'S REVIEW PRIOR TO ORDERING MATERIAL.
6. EXACT UTILITITY TYPES AND LOCATIONS ARE SHOWN FOR INFORMATIONAL PURPOSES ONLY AND MAY NOT BE EXHAUSTIVE OF ALL UTILIES PRESNT. THE CONTRACTOR SHALL VERIFY ALL UTILITIES IN FIELD PRIOR TO THE DESIGN AND CONSTRUCTION OF THE BRIDGE. INFORM THE CONTRACTING OFFICER OF ANY DISREPANCY OR POTENTIAL CLASH AND AWAIT DIRECTION.
7. EDGE OF BRIDGE SUPPORTS SHALL BE AT LEAST TWO FEET FROM THE EDGE OF ANY UTILITY LINE.

5 S201 **PEDESTRIAN BRIDGE ELEVATION (OLI #1)**
Scale: 3/16" = 1'-0"

N

This drawing has been prepared for the use of AECOM's client and may not be used, reproduced or relied upon by third parties, except as agreed by AECOM and its client, as required by law or for use by governmental reviewing agencies. AECOM accepts no responsibility, and denies any liability whatsoever, to any party that modifies this drawing without AECOM's express written consent. Do not scale this document. All measurements must be obtained from the stated dimensions.

AECOM

PROJECT

NEW SECURITY FORCES BUILDING

PAYNE BLVD.
CHARLOTTE, NORTH CAROLINA 28208

CLIENT

NORTH CAROLINA AIR NATIONAL GUARD - 145TH AIRLIFT WING

145th AIRLIFT WING
4930 MINUTEMAN WAY
CHARLOTTE, NORTH CAROLINA 28208

ARCHITECT/DESIGNER

AECOM

277 W NATIONWIDE BLVD
COLUMBUS, OH 43215
614-464-4500

http://www.aecom.com

CONSULTANTS

REGISTRATION

STATE OF OHIO
ANDREW L KNAPKE
9E-66697
REGISTERED PROFESSIONAL ENGINEER
5-30-25

ISSUE/REVISION

I/R	DATE	DESCRIPTION
	05/30/2025	B-3 SUBMITTAL - FINAL

PROJECT NUMBER

60637899
FJRP229030

SHEET TITLE

STRUCTURAL ELEVATIONS

SHEET NUMBER

S201

©2023 AECOM Corporation

ARCH E1 30"x42" Approved: AK Checked: PA Designer: AA Project Management Initials: MR

Last Plotted: 5/20/2025 4:17:00 PM
Filename: BM-300-ISP-AABER (OSA) 60637899-SFNCANG145/60637899_SF-NC ANG_R31_S.rvt

Printed on ___% Post-Consumer Recycled Content Paper

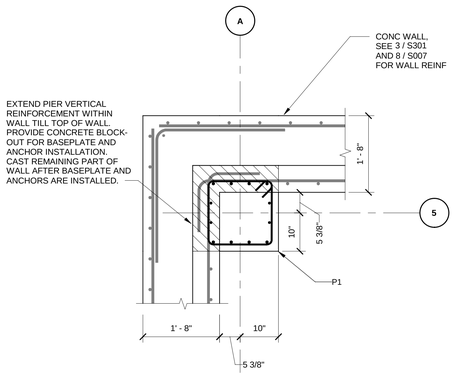

1 S300 — **DETAIL**
Scale: 3/4" = 1'-0"

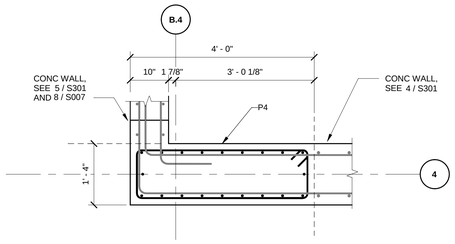

2 S300 — **DETAIL**
Scale: 3/4" = 1'-0"

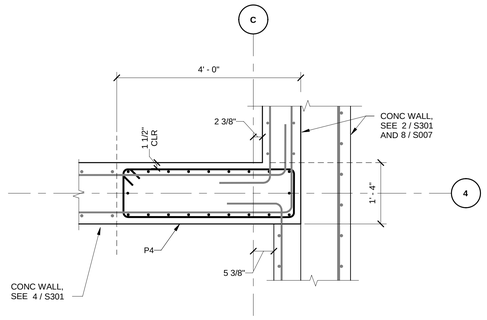

3 S300 — **DETAIL**
Scale: 3/4" = 1'-0"

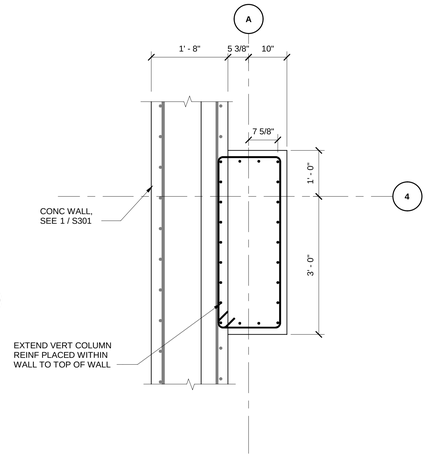

4 S300 — **DETAIL**
Scale: 3/4" = 1'-0"

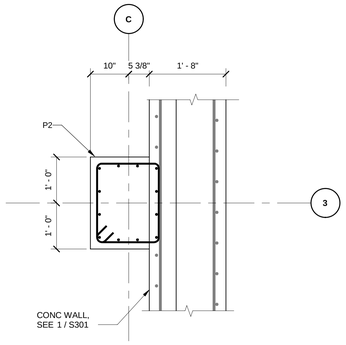

5 S300 — **DETAIL**
Scale: 3/4" = 1'-0"

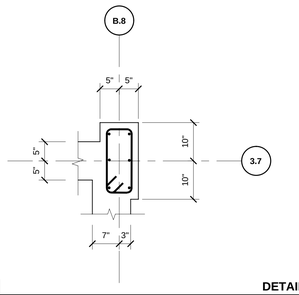

6 S300 — **DETAIL**
Scale: 3/4" = 1'-0"

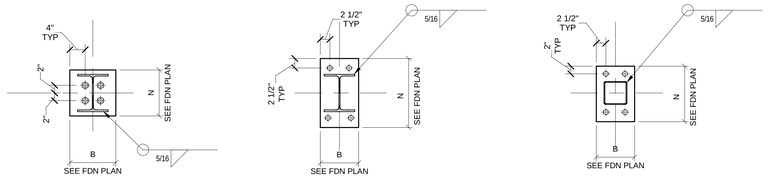

TYPE A **TYPE B** **TYPE C**

NOTES:

SEE FOUNDATION PLAN FOR BASE PLATE THICKNESS, ANCHOR ROD SIZE AND EMBEDMENT

BASEPLATE MATERIAL SHALL BE ASTM A36 UNO

7 S300 — **BASE PLATE DETAILS**
Scale: 3/4" = 1'-0"

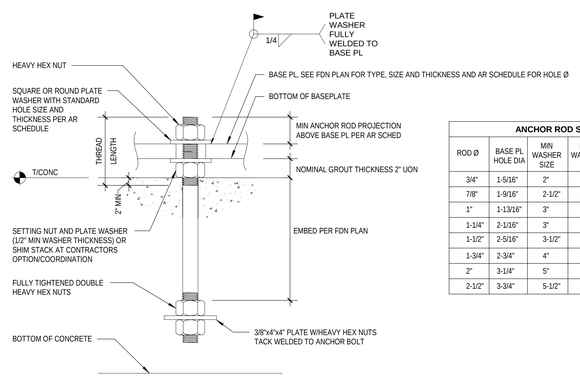

NOTE:
WELDED WASHERS NOT REQUIRED FOR TYPE 1 BASE PLATES

ANCHOR ROD SCHEDULE

ROD Ø	BASE PL HOLE DIA	MIN WASHER SIZE	MIN WASHER t	MIN PROJ ABOVE BASE PL	ASTM F1554 GRADE
3/4"	1-5/16"	2"	1/4"	3"	36
7/8"	1-9/16"	2-1/2"	5/16"	3"	36
1"	1-13/16"	3"	3/8"	3"	36
1-1/4"	2-1/16"	3"	1/2"	4"	36
1-1/2"	2-5/16"	3-1/2"	1/2"	4"	36
1-3/4"	2-3/4"	4"	3/4"	5"	55
2"	3-1/4"	5"	3/4"	5"	55
2-1/2"	3-3/4"	5-1/2"	1"	5"	55

8 S300 — **ANCHOR ROD DETAILS**
Scale: 3" = 1'-0"

N

This drawing has been prepared for the use of AECOM's client and may not be used, reproduced or relied upon by third parties, except as agreed by AECOM and its client, as required by law or for use by governmental reviewing agencies. AECOM accepts no responsibility, and denies any liability whatsoever, to any party that modifies this drawing without AECOM's express written consent. Do not scale this document. All measurements must be obtained from the stated dimensions.

AECOM

PROJECT
NEW SECURITY FORCES BUILDING
PAYNE BLVD.
CHARLOTTE, NORTH CAROLINA 28208

CLIENT
NORTH CAROLINA AIR NATIONAL GUARD - 145TH AIRLIFT WING
145th AIRLIFT WING
4930 MINUTEMAN WAY
CHARLOTTE, NORTH CAROLINA 28208

ARCHITECT/DESIGNER
AECOM
277 W NATIONWIDE BLVD
COLUMBUS, OH 43215
614-464-4500

http://www.aecom.com

CONSULTANTS

REGISTRATION

STATE OF OHIO
ANDREW L KNAPKE
9E-66697
REGISTERED
PROFESSIONAL ENGINEER
5-30-25

ISSUE/REVISION

I/R	DATE	DESCRIPTION
	05/30/2025	B-3 SUBMITTAL - FINAL

PROJECT NUMBER
60637899
FJRP229030

SHEET TITLE
STRUCTURAL DETAILS

SHEET NUMBER
S300

©2023 AECOM Corporation

ARCH E1 30"x42" Approved: AK Checked: PA Designer: AA Project Management Initials: MR

Last Plotted: 5/29/2025 4:17:00 PM
Filename: BM 360/BP-AA6JH (USA) \60637899-SFNCANG\145th\60637899_SF-NC ANG_R31_S-V4

Printed on: ____% Post-Consumer Recycled Content Paper

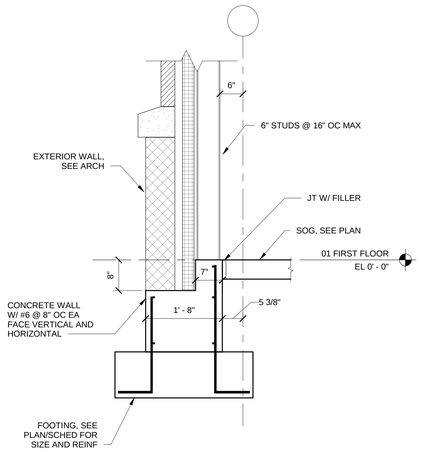

1 S301 — **SECTION**
Scale: 3/4" = 1'-0"

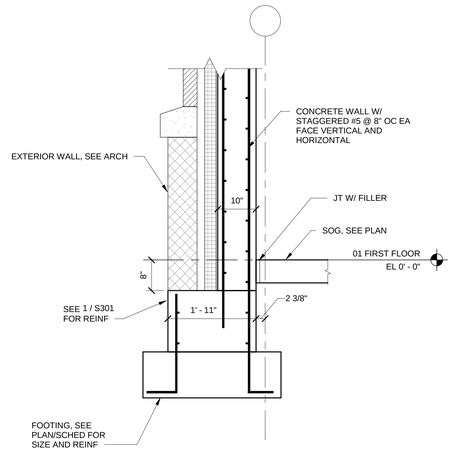

2 S301 — **SECTION**
Scale: 3/4" = 1'-0"

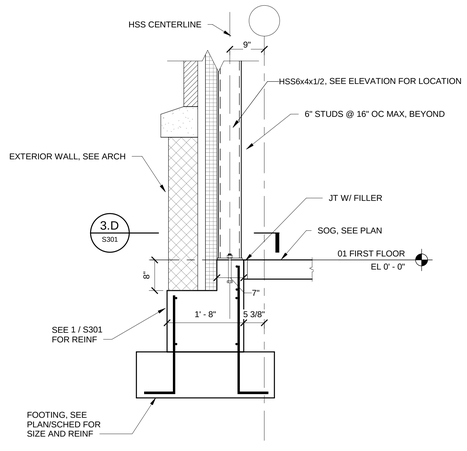

3 S301 — **SECTION**
Scale: 3/4" = 1'-0"

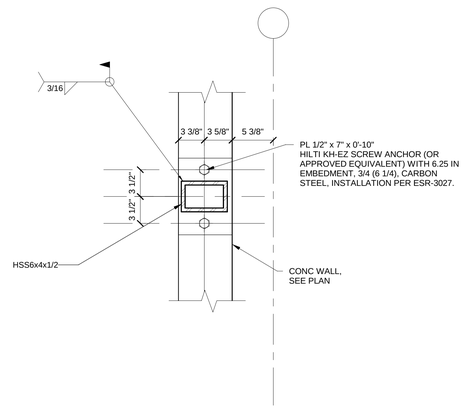

3.D S301 — **DETAIL**
Scale: 1 1/2" = 1'-0"

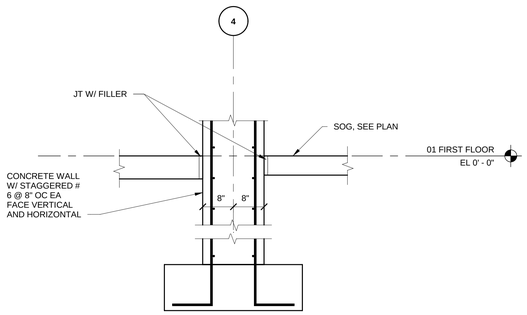

4 S301 — **SECTION**
Scale: 3/4" = 1'-0"

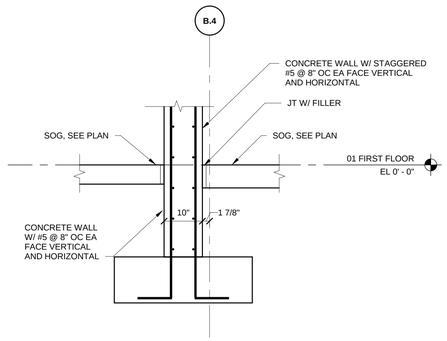

5 S301 — **SECTION**
Scale: 3/4" = 1'-0"

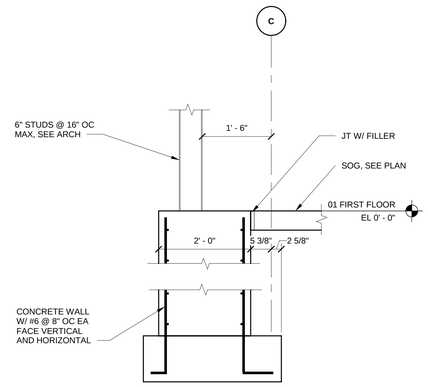

6 S301 — **SECTION**
Scale: 3/4" = 1'-0"

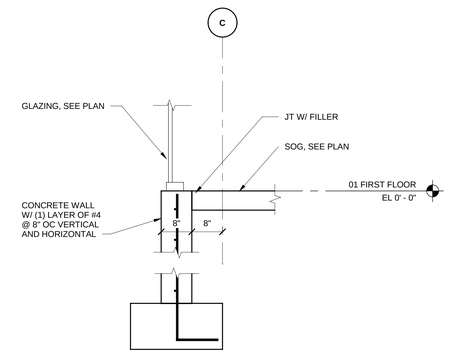

7 S301 — **SECTION**
Scale: 3/4" = 1'-0"

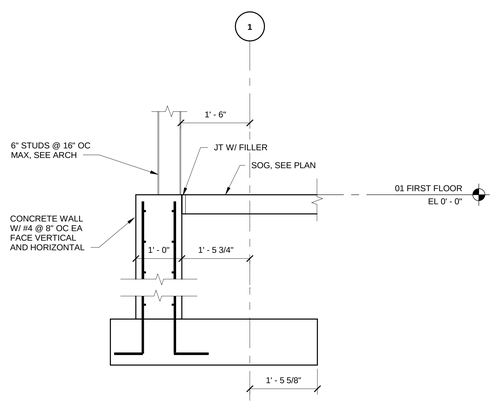

8 S301 — **SECTION**
Scale: 3/4" = 1'-0"

N

This drawing has been prepared for the use of AECOM's client and may not be used, reproduced or relied upon by third parties, except as agreed by AECOM and its client, as required by law or for use by governmental reviewing agencies. AECOM accepts no responsibility, and denies any liability whatsoever, to any party that modifies this drawing without AECOM's express written consent. Do not scale this document. All measurements must be obtained from the stated dimensions.

AECOM

PROJECT
NEW SECURITY FORCES BUILDING
PAYNE BLVD.
CHARLOTTE, NORTH CAROLINA 28208

CLIENT
NORTH CAROLINA AIR NATIONAL GUARD - 145TH AIRLIFT WING
145th AIRLIFT WING
4930 MINUTEMAN WAY
CHARLOTTE, NORTH CAROLINA 28208

ARCHITECT/DESIGNER
AECOM
277 W NATIONWIDE BLVD
COLUMBUS, OH 43215
614-464-4500

http://www.aecom.com

CONSULTANTS

REGISTRATION

STATE OF OHIO
ANDREW L. KNAPKE
9E-66697
REGISTERED PROFESSIONAL ENGINEER
5-30-25

ISSUE/REVISION

I/R	DATE	DESCRIPTION
	05/30/2025	B-3 SUBMITTAL - FINAL

PROJECT NUMBER
60637899
FJRP229030

SHEET TITLE
STRUCTURAL DETAILS

SHEET NUMBER
S301

©2023 AECOM Corporation

ARCH E1 30"x42" Approved: AK Checked: PA Designer: AA Project Management Initials: MR

Last Plotted: 5/20/2025 4:17:01 PM
Filename: BIM 360/FIP-AMER (CSA) 60637899-SFR/CAD/145/60637899_SF-NC ANG_R21_S.rvt

Printed on ___% Post-Consumer Recycled Content Paper

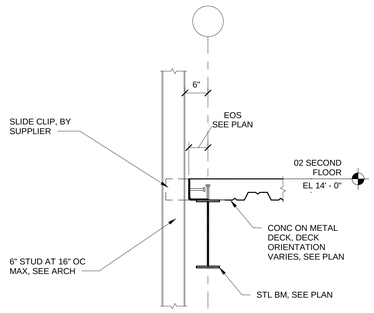

1 S302 — **SECTION** Scale: 3/4" = 1'-0"

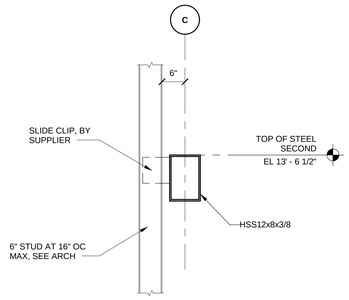

2 S302 — **SECTION** Scale: 3/4" = 1'-0"

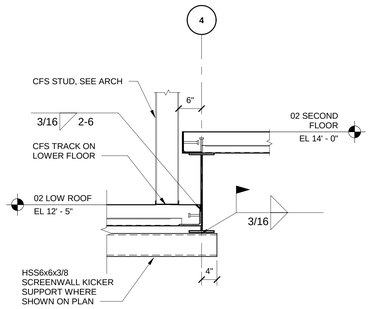

3 S302 — **SECTION** Scale: 3/4" = 1'-0"

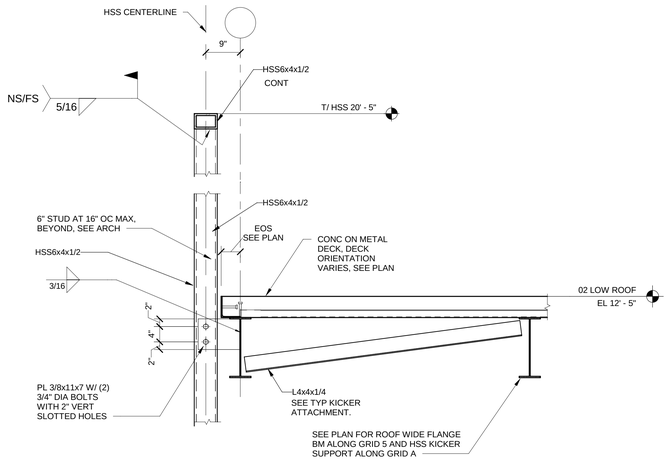

4 S302 — **SECTION** Scale: 3/4" = 1'-0"

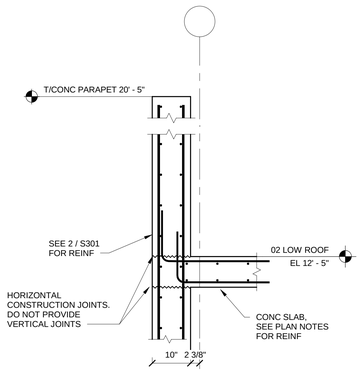

5 S302 — **SECTION** Scale: 3/4" = 1'-0"

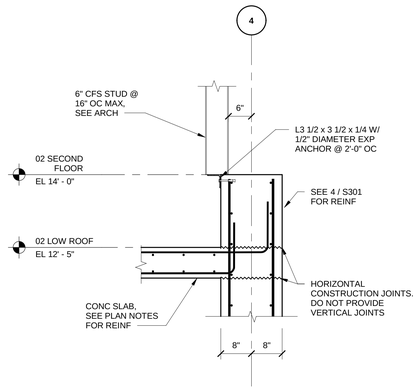

6 S302 — **SECTION** Scale: 3/4" = 1'-0"

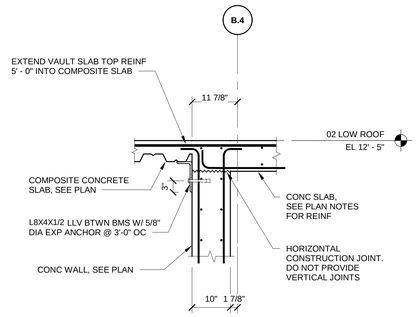

7 S302 — **SECTION** Scale: 3/4" = 1'-0"

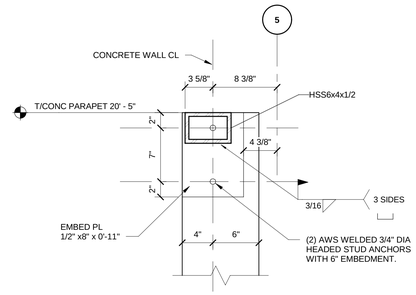

8 S302 — **SECTION** Scale: 1 1/2" = 1'-0"

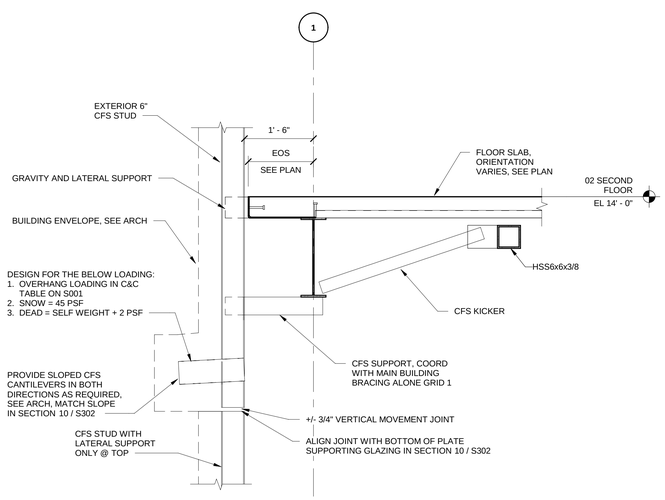

9 S302 — **SECTION** Scale: 3/4" = 1'-0"

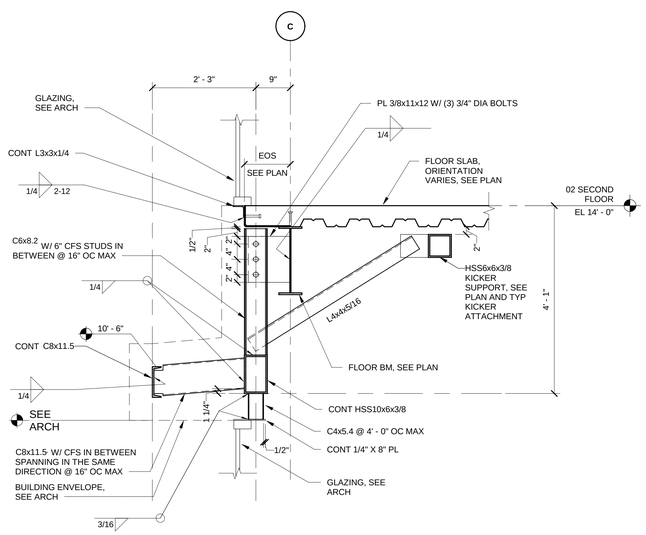

10 S302 — **SECTION** Scale: 3/4" = 1'-0"

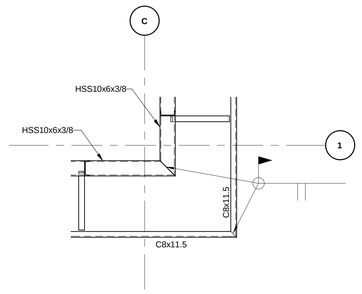

11 S302 — **DETAIL** Scale: 1/2" = 1'-0"

N

This drawing has been prepared for the use of AECOM's client and may not be used, reproduced or relied upon by third parties, except as agreed by AECOM and its client, as required by law or for use by governmental reviewing agencies. AECOM accepts no responsibility, and denies any liability whatsoever, to any party that modifies this drawing without AECOM's express written consent. Do not scale this document. All measurements must be obtained from the stated dimensions.

AECOM

PROJECT

NEW SECURITY FORCES BUILDING

PAYNE BLVD.
CHARLOTTE, NORTH CAROLINA 28208

CLIENT

NORTH CAROLINA AIR NATIONAL GUARD - 145TH AIRLIFT WING

145th AIRLIFT WING
4930 MINUTEMAN WAY
CHARLOTTE, NORTH CAROLINA 28208

ARCHITECT/DESIGNER

AECOM

277 W NATIONWIDE BLVD
COLUMBUS, OH 43215
614-464-4500

http://www.aecom.com

CONSULTANTS

REGISTRATION

STATE OF OHIO
ANDREW L. KNAPKE
9E-66697
REGISTERED PROFESSIONAL ENGINEER
5-30-25

ISSUE/REVISION

I/R	DATE	DESCRIPTION
	05/30/2025	B-3 SUBMITTAL - FINAL

PROJECT NUMBER

60637899
FJRP229030

SHEET TITLE

STRUCTURAL DETAILS

SHEET NUMBER

S302

©2023 AECOM Corporation

ARCH E1 30"x42" Approved: AK Checked: AA Designer: PA Project Management Initials: MR

Last Plotted: 5/20/2025 4:17:02 PM
Filename: BM-360-BP-A4EB (USA) 60637899-SP\NCANG\45\60637899_SF-NC ANG_R31_S-H

Printed on ___% Post-Consumer Recycled Content Paper

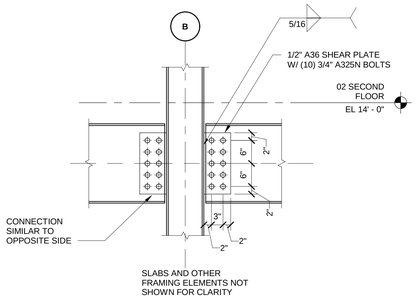

1 S303 — **SECTION**
Scale: 3/4" = 1'-0"

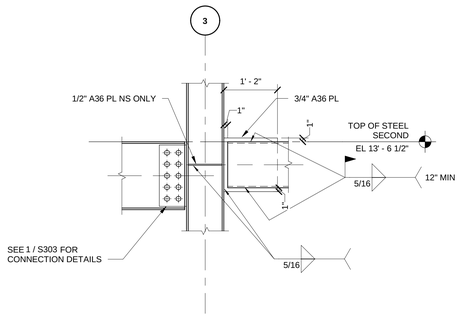

2 S303 — **SECTION**
Scale: 3/4" = 1'-0"

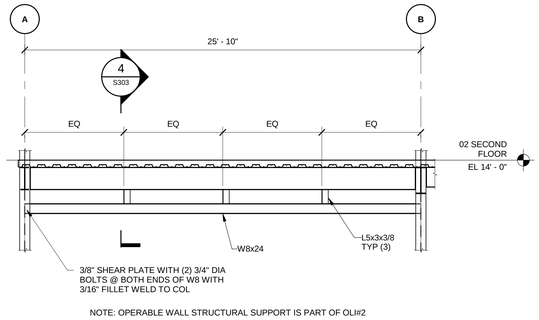

NOTE: OPERABLE WALL STRUCTURAL SUPPORT IS PART OF OLI#2

3 S303 — **OPERABLE WALL SUPPORT FRAMING**
Scale: 1/4" = 1'-0"

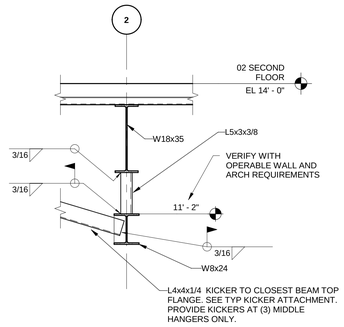

4 S303 — **SECTION**
Scale: 3/4" = 1'-0"

N

This drawing has been prepared for the use of AECOM's client and may not be used, reproduced or relied upon by third parties, except as agreed by AECOM and its client, as required by law or for use by governmental reviewing agencies. AECOM accepts no responsibility, and denies any liability whatsoever, to any party that modifies this drawing without AECOM's express written consent. Do not scale this document. All measurements must be obtained from the stated dimensions.

AECOM

PROJECT
NEW SECURITY FORCES BUILDING
PAYNE BLVD.
CHARLOTTE, NORTH CAROLINA 28208

CLIENT
NORTH CAROLINA AIR NATIONAL GUARD - 145TH AIRLIFT WING
145th AIRLIFT WING
4930 MINUTEMAN WAY
CHARLOTTE, NORTH CAROLINA 28208

ARCHITECT/DESIGNER
AECOM
277 W NATIONWIDE BLVD
COLUMBUS, OH 43215
614-464-4500

http://www.aecom.com

CONSULTANTS

REGISTRATION

STATE OF OHIO
ANDREW L KNAPKE
9E-66697
REGISTERED
PROFESSIONAL ENGINEER
5-30-25

ISSUE/REVISION

I/R	DATE	DESCRIPTION
	05/30/2025	B-3 SUBMITTAL - FINAL

PROJECT NUMBER
60637899
FJRP229030

SHEET TITLE
STRUCTURAL DETAILS

SHEET NUMBER
S303

©2023 AECOM Corporation

ARCH E1 30"x42" Approved: AK Checked: PA Designer: AA Project Management Initials: MR
Last Plotted: 5/29/2025 4:17:03 PM
Filename: 60637899-SFNCANGD145th60637899_SF-NC ANG_R31_S-H
Printed on ____% Post-Consumer Recycled Content Paper

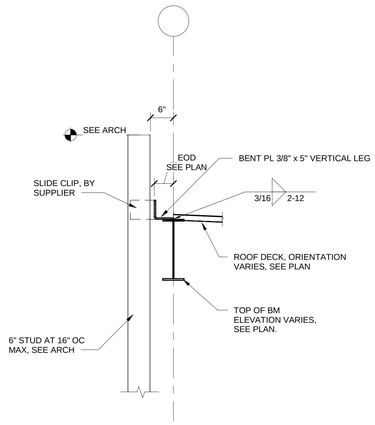

1 S304 — **SECTION**
Scale: 3/4" = 1'-0"

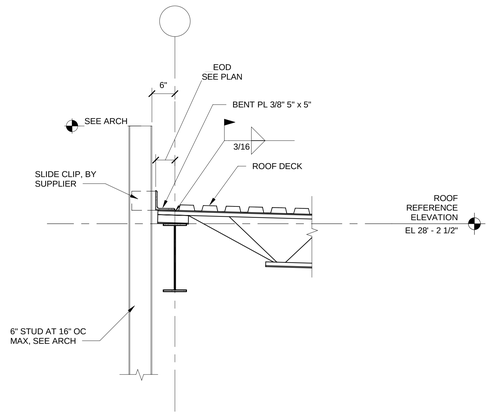

2 S304 — **SECTION**
Scale: 3/4" = 1'-0"

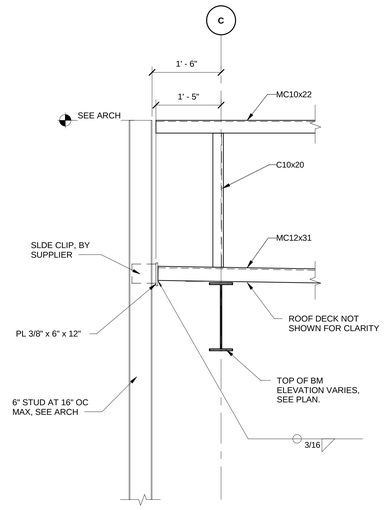

3 S304 — **SECTION**
Scale: 3/4" = 1'-0"

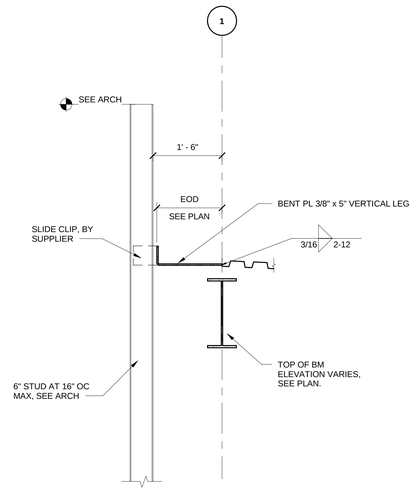

4 S304 — **SECTION**
Scale: 3/4" = 1'-0"

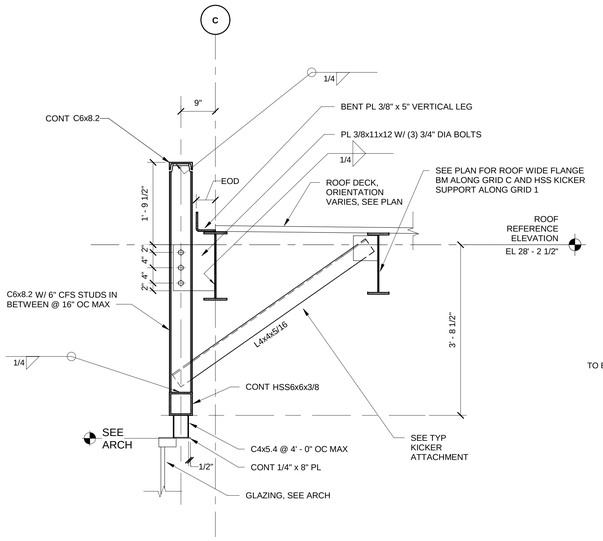

5 S304 — **SECTION**
Scale: 3/4" = 1'-0"

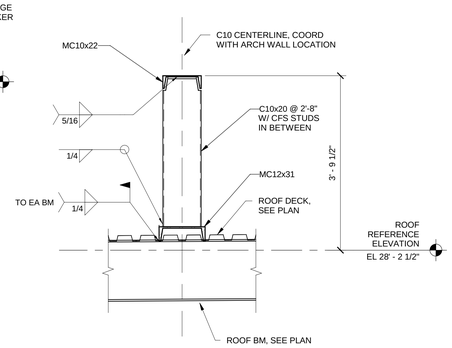

6 S304 — **SECTION**
Scale: 3/4" = 1'-0"

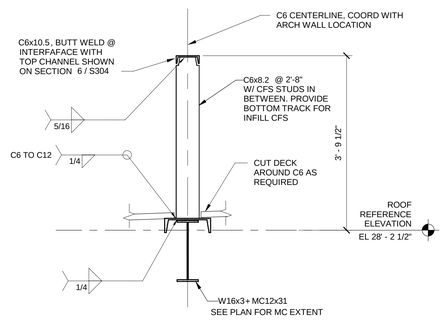

7 S304 — **SECTION**
Scale: 3/4" = 1'-0"

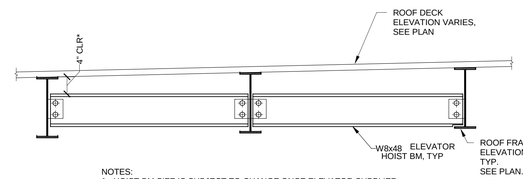

NOTES:
1. HOIST BM SIZE IS SUBJECT TO CHANGE ONCE ELEVATOR SUPPLIER PROVIDES FINAL LOADING ON BM
2. CLEARANCE SHOWN IS THE MINIMUM REQUIRED BETWEEN THE TOP OF HOIST BEAM AND THE BOTTOM OF THE DECK AT ANY LOCATION. HOIST BEAM SHALL NOT BE SLOPED. CLEARANCE DISTANCE IS SUBJECT TO FINAL ELEVATOR SUPPLIER REQUIREMENTS.

8 S304 — **SECTION**
Scale: 3/4" = 1'-0"

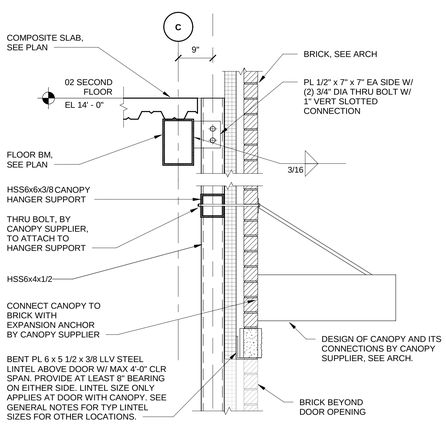

9 S304 — **SECTION**
Scale: 3/4" = 1'-0"

N

This drawing has been prepared for the use of AECOM's client and may not be used, reproduced or relied upon by third parties, except as agreed by AECOM and its client, as required by law or for use by governmental reviewing agencies. AECOM accepts no responsibility, and denies any liability whatsoever, to any party that modifies this drawing without AECOM's express written consent. Do not scale this document. All measurements must be obtained from the stated dimensions.

AECOM

PROJECT
NEW SECURITY FORCES BUILDING
PAYNE BLVD.
CHARLOTTE, NORTH CAROLINA 28208

CLIENT
NORTH CAROLINA AIR NATIONAL GUARD - 145TH AIRLIFT WING
145th AIRLIFT WING
4930 MINUTEMAN WAY
CHARLOTTE, NORTH CAROLINA 28208

ARCHITECT/DESIGNER
AECOM
277 W NATIONWIDE BLVD
COLUMBUS, OH 43215
614-464-4500

http://www.aecom.com

CONSULTANTS

REGISTRATION

STATE OF OHIO
ANDREW L. KNAPKE
9E-66697
REGISTERED
PROFESSIONAL ENGINEER
5-30-25

ISSUE/REVISION

I/R	DATE	DESCRIPTION
	05/30/2025	B-3 SUBMITTAL - FINAL

PROJECT NUMBER
60637899
FJRP229030

SHEET TITLE
STRUCTURAL DETAILS

SHEET NUMBER
S304

©2023 AECOM Corporation

ARCH E1 30"x42" Approved: AK Checked: PA Designer: AA Project Management Initials: MR

Last Plotted: 5/20/2025 4:17:04 PM
Filename: BIM 360/BP-AMER (USA) 60637899-SPACANG145#60637899_SF-NC ANG_R23_S-V4

Printed on ___% Post-Consumer Recycled Content Paper

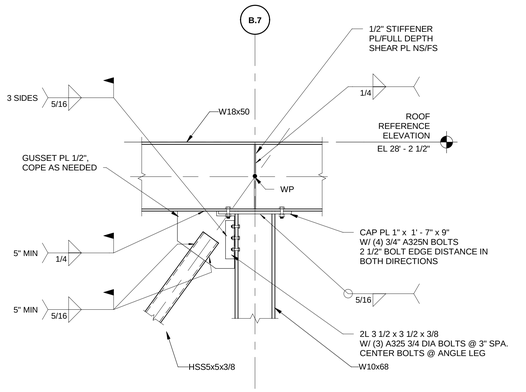

1 S305 **DETAIL**
Scale: 3/4" = 1'-0"

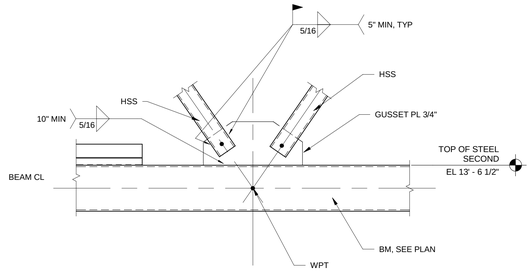

2 S305 **DETAIL**
Scale: 3/4" = 1'-0"

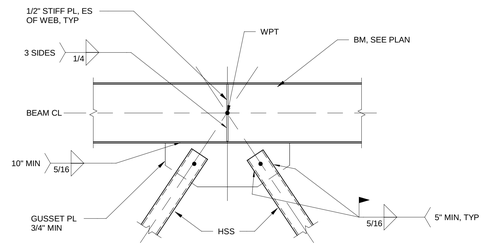

NOTE: DECK AND/OR CONC NOT SHOWN FOR CLARITY

3 S305 **DETAIL**
Scale: 3/4" = 1'-0"

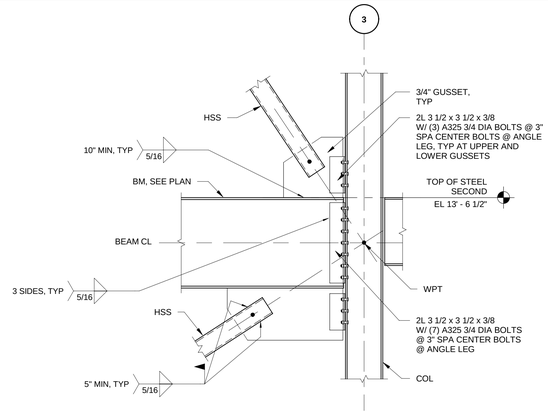

DECK AND/OR CONC NOT SHOWN FOR CLARITY

4 S305 **DETAIL**
Scale: 3/4" = 1'-0"

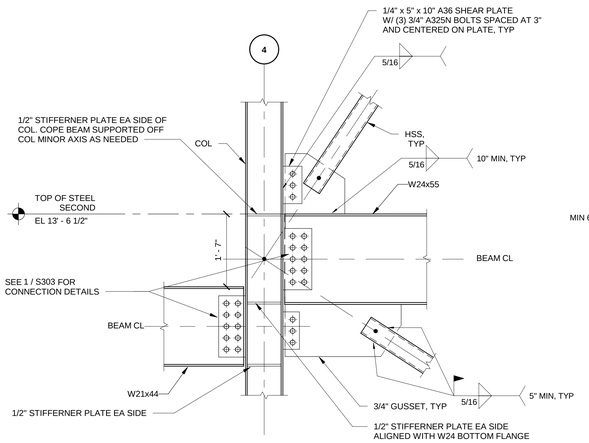

NOTES:
1. DECK AND/OR CONC NOT SHOWN FOR CLARITY

5 S305 **DETAIL**
Scale: 3/4" = 1'-0"

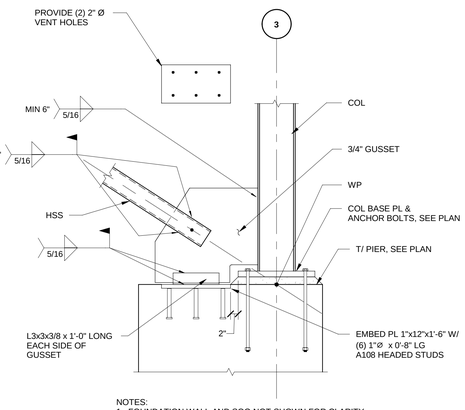

NOTES:
1. FOUNDATION WALL AND SOG NOT SHOWN FOR CLARITY

6 S305 **DETAIL**
Scale: 3/4" = 1'-0"

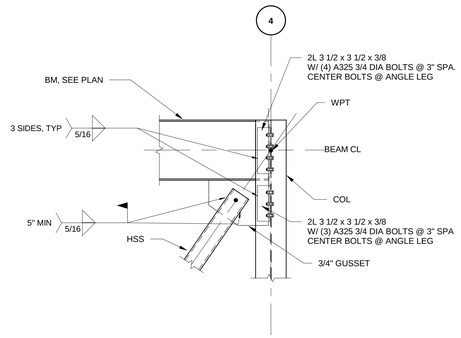

7 S305 **DETAIL**
Scale: 3/4" = 1'-0"

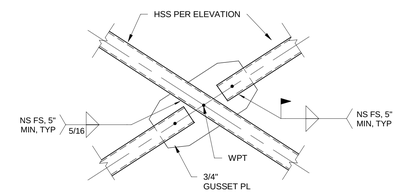

8 S305 **DETAIL**
Scale: 3/4" = 1'-0"

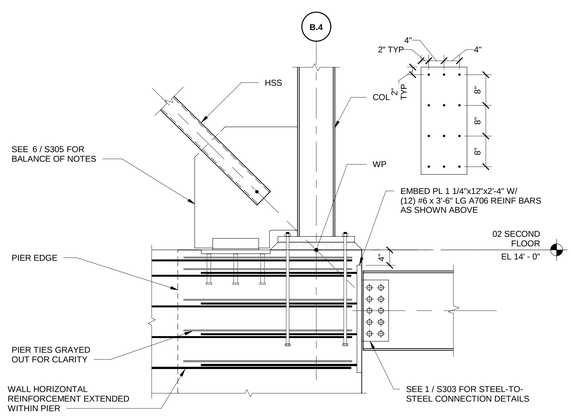

9 S305 **DETAIL**
Scale: 3/4" = 1'-0"

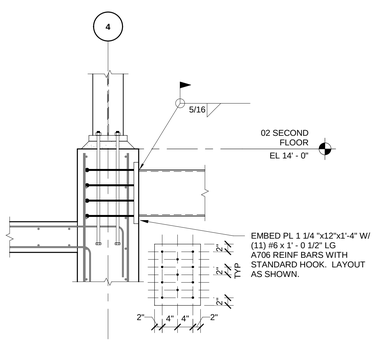

10 S305 **DETAIL**
Scale: 3/4" = 1'-0"

N

©2023 AECOM Corporation

This drawing has been prepared for the use of AECOM's client and may not be used, reproduced or relied upon by third parties, except as agreed by AECOM and its client, as required by law or for use by governmental reviewing agencies. AECOM accepts no responsibility, and denies any liability whatsoever, to any party that modifies this drawing without AECOM's express written consent. Do not scale this document. All measurements must be obtained from the stated dimensions.

AECOM

PROJECT
NEW SECURITY FORCES BUILDING
PAYNE BLVD.
CHARLOTTE, NORTH CAROLINA 28208

CLIENT
NORTH CAROLINA AIR NATIONAL GUARD - 145TH AIRLIFT WING
145th AIRLIFT WING
4930 MINUTEMAN WAY
CHARLOTTE, NORTH CAROLINA 28208

ARCHITECT/DESIGNER
AECOM
277 W NATIONWIDE BLVD
COLUMBUS, OH 43215
614-464-4500

http://www.aecom.com

CONSULTANTS

REGISTRATION

STATE OF OHIO
ANDREW L KNAPKE
9E-66697
REGISTERED PROFESSIONAL ENGINEER
5-30-25

ISSUE/REVISION

I/R	DATE	DESCRIPTION
	05/30/2025	B-3 SUBMITTAL - FINAL

PROJECT NUMBER
60637899
FJRP229030

SHEET TITLE
STRUCTURAL DETAILS

SHEET NUMBER
S305

ARCH E1 30"x42" Approved: AK Checked: PA Designer: AA Project Management Initials: MR

Last Plotted: 5/30/2025 4:17:05 PM
Filename: BM 300UFP-AMER (DGN) 60637899-SFNCANG145th60637899_SF-NC ANG_R21_S-r4

Printed on ___ % Post-Consumer Recycled Content Paper

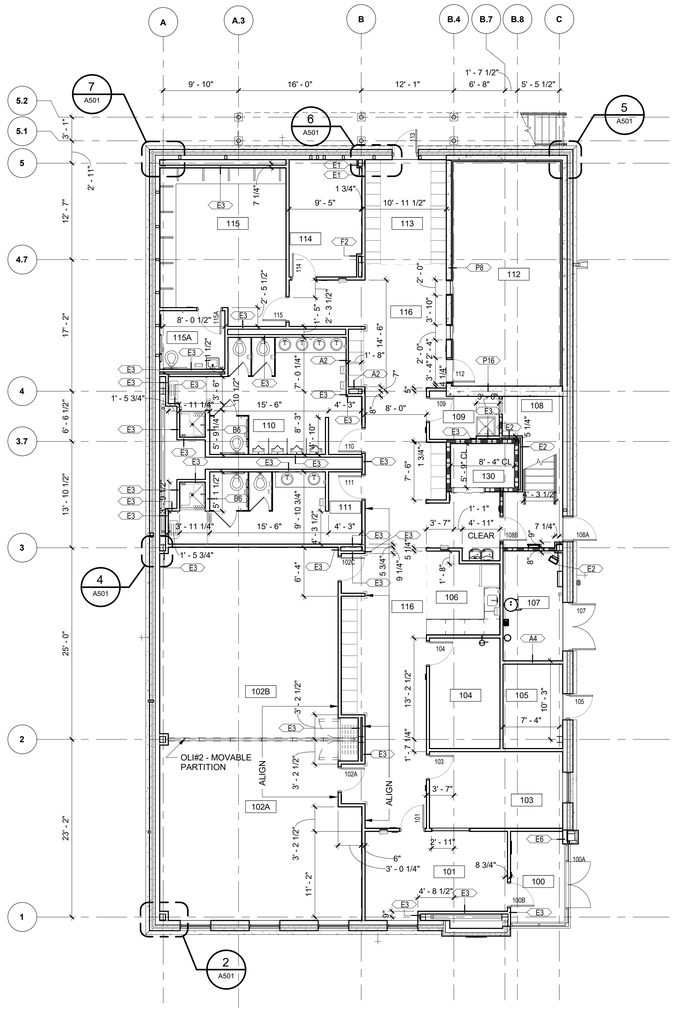

2 A201 **FIRST FLOOR DIMENSION PLAN**
Scale: 1/8" = 1'-0"

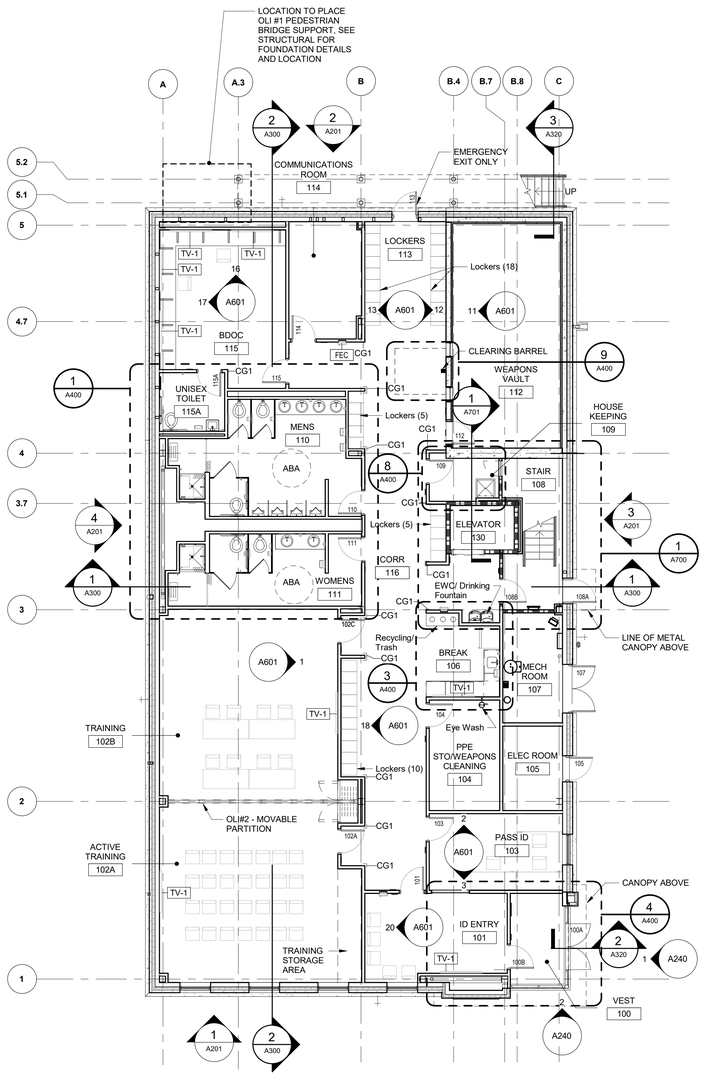

1 A201 **FIRST FLOOR PLAN**
Scale: 1/8" = 1'-0"

GENERAL NOTES - FLOOR PLAN

1. FOR GRAPHIC SYMBOLS ABBREVIATIONS SEE SHEET G001.
2. ALL DIMENSIONS MUST BE FIELD VERIFIED AND THE ARCHITECT MUST BE NOTIFIED OF ANY DISCREPANCIES BEFORE PROCEEDING WITH THE WORK. CONTACT THE ARCHITECT FOR DETERMINING A REQUIRED DIMENSION THAT IS NOT INDICATED ON THE DRAWINGS. DO NOT SCALE DRAWINGS.
3. REFER TO DIMENSION PLANS FOR PARTITION AND DIMENSION INFORMATION.
4. DIMENSION FROM ADJACENT WALL TO INSIDE FRAME OF DOOR JAMB TO BE 6" UON.
5. DIMENSIONS ARE TO GRID LINE, FINISH FACE, FACE OF CMU, UNO.
6. FURNITURE IS SHOWN AS HALF-TONE, FOR REFERENCE ONLY. FURNITURE IS NOT IN SCOPE OF THIS PROJECT.
7. EQUIPMENT / ACCESSORIES ARE SHOWN AS DASHED.
8. SEE CIVIL PLANS FOR GRADING, FINISHES, THICKNESS,
9. REINFORCING, CONTROL, AND EXPANSION JOINTS OF WALKS AND ALL HARDSCAPING PAVED AREAS.
10. ALL GYPSUM BOARD SHALL BE 5/8" THICK, UNO.
11. CONTRACTOR SHALL PROVIDE ALL FIRE-TREATED WOOD BLOCKING AS REQUIRED TO SUPPORT WALL MOUNTED ACCESSORIES INCLUDING BUT NOT LIMITED TO TOILET ROOM ACCESSORIES, DOOR STOPS, CABINETS, AND SHELVING.
12. ALTERNATES ARE INDICATED BY "OLI", OPTIONAL LINE ITEM.
13. ALL GYPSUM BOARD PARTITIONS SHALL BE TYPE [B3] UNLESS OTHERWISE NOTED.

FLOOR PLAN LEGED

- CMU WALL
- CONCRETE WALL
- STUD WALL
- 1 HR RATED FIRE PARTITION

FURNITURE SCHEDULE

MARK	DESCRIPTION	COMMENTS
PR-1	PROJECTOR SCREEN	GFCI
PS-1	PROJECTION SCREEN, CEILING MOUNTED	GFCI
TV-1	LARGE WALL MOUNTED TELEVISION	GFCI
TV-2	SMALL WALL MOUNTED TELEVISION	GFCI
WB-1	WHITEBOARD	GFCI

AECOM

PROJECT

NEW SECURITY FORCES BUILDING

PAYNE BLVD.
CHARLOTTE, NORTH CAROLINA 28208

CLIENT

NORTH CAROLINA AIR NATIONAL GUARD - 145TH AIRLIFT WING

145th AIRLIFT WING
4930 MINUTEMAN WAY
CHARLOTTE, NORTH CAROLINA 28208

ARCHITECT/DESIGNER

AECOM

277 W NATIONWIDE BLVD
COLUMBUS, OH 43215
614-464-4500

http://www.aecom.com

CONSULTANTS

REGISTRATION

STATE OF OHIO
MARTY SIEBE
1817301
REGISTERED ARCHITECT
5/30/2025

KEY PLAN

8 6 4 2 0 8 16
SCALE: 1/8"=1'-0"

ISSUE/REVISION

I/R	DATE	DESCRIPTION
	05/30/2025	B-3 SUBMITTAL - FINAL

PROJECT NUMBER

60637899
FJRP229030

SHEET TITLE

FLOOR PLAN - LEVEL 1

SHEET NUMBER

A101

This drawing has been prepared for the use of AECOM's client and may not be used, reproduced or relied upon by third parties, except as agreed by AECOM and its client, as required by law or for use by governmental reviewing agencies. AECOM accepts no responsibility, and denies any liability whatsoever, to any party that modifies this drawing without AECOM's express written consent. Do not scale this document. All measurements must be obtained from the stated dimensions.

©2023 AECOM Corporation

Project Management Initials: MR Designer: Designer Checker: Checker Approved: Approver ARCH E1 30"x42"
Last Plotted: 5/23/2025 12:12:00 PM
Filename: BM:360:SBP-AMER:USNA:60637899-SFNCANG145th563739_SF-NC ANG_R21_A.rvt
Printed on:____% Post-Consumer Recycled Content Paper

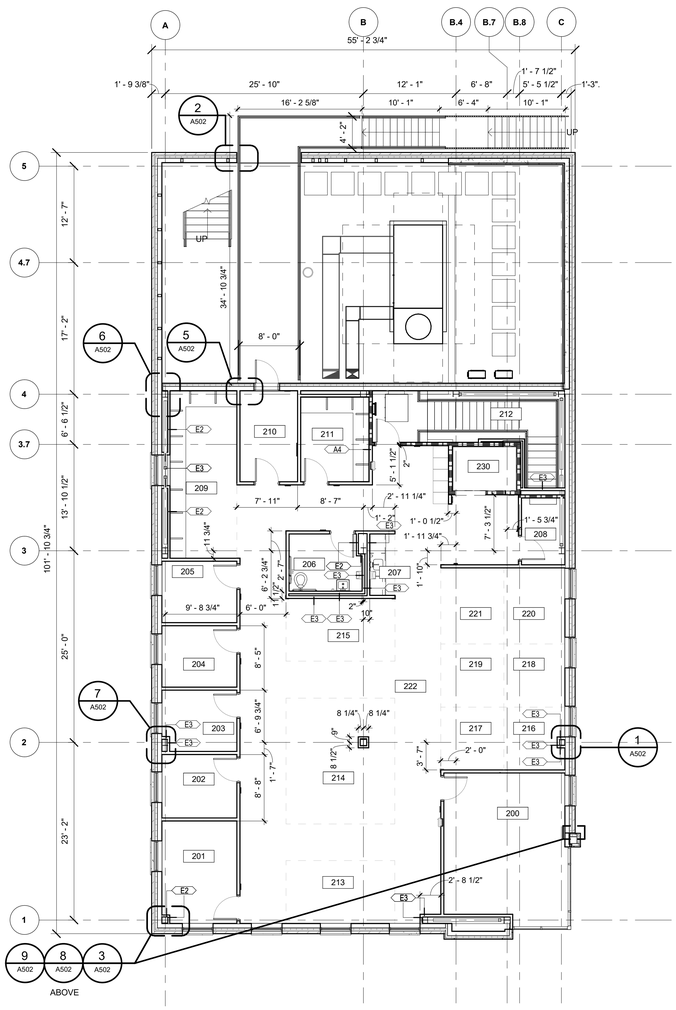

2 A201 **SECOND FLOOR DIMENSION PLAN**
Scale: 1/8" = 1'-0"

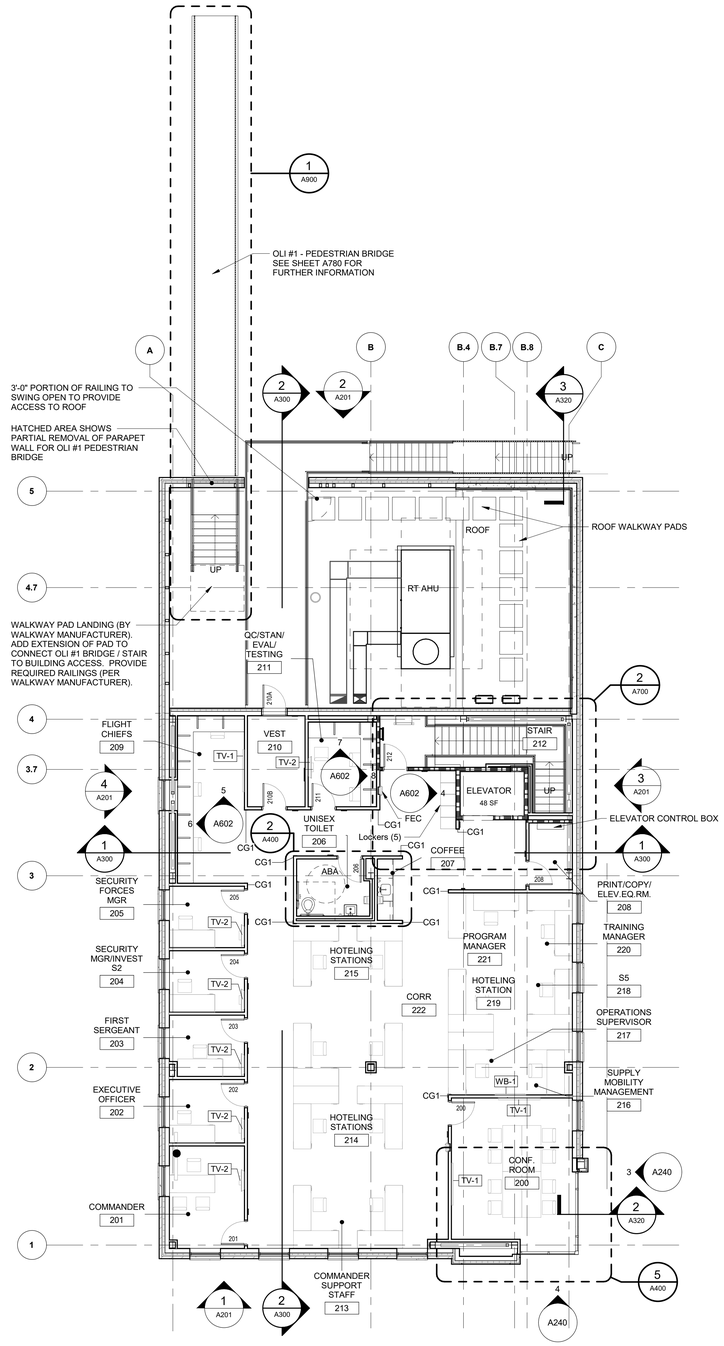

1 A201 **SECOND FLOOR PLAN**
Scale: 1/8" = 1'-0"

GENERAL NOTES - FLOOR PLAN

1. FOR GRAPHIC SYMBOLS ABBREVIATIONS SEE SHEET G001.
2. ALL DIMENSIONS MUST BE FIELD VERIFIED AND THE ARCHITECT MUST BE NOTIFIED OF ANY DISCREPANCIES BEFORE PROCEEDING WITH THE WORK. CONTACT THE ARCHITECT FOR DETERMINING A REQUIRED DIMENSION THAT IS NOT INDICATED ON THE DRAWINGS. DO NOT SCALE DRAWINGS.
3. REFER TO DIMENSION PLANS FOR PARTITION AND DIMENSION INFORMATION.
4. DIMENSION FROM ADJACENT WALL TO INSIDE FRAME OF DOOR JAMB TO BE 6" UON.
5. DIMENSIONS ARE TO GRID LINE, FINISH FACE, FACE OF CMU, UNO.
6. FURNITURE IS SHOWN AS HALF-TONE, FOR REFERENCE ONLY. FURNITURE IS NOT IN SCOPE OF THIS PROJECT.
7. EQUIPMENT / ACCESSORIES ARE SHOWN AS DASHED.
8. SEE CIVIL PLANS FOR GRADING, FINISHES, THICKNESS,
9. REINFORCING, CONTROL, AND EXPANSION JOINTS OF WALKS AND ALL HARDSCAPING PAVED AREAS.
10. ALL GYPSUM BOARD SHALL BE 5/8" THICK, UNO.
11. CONTRACTOR SHALL PROVIDE ALL FIRE-TREATED WOOD BLOCKING AS REQUIRED TO SUPPORT WALL MOUNTED ACCESSORIES INCLUDING BUT NOT LIMITED TO TOILET ROOM ACCESSORIES, DOOR STOPS, CABINETS, AND SHELVING.
12. ALTERNATES ARE INDICATED BY "OLI", OPTIONAL LINE ITEM.
13. ALL GYPSUM BOARD PARTITIONS SHALL BE TYPE [B3] UNLESS OTHERWISE NOTED.

FLOOR PLAN LEGED

- CMU WALL
- CONCRETE WALL
- STUD WALL
- 1 HR RATED FIRE PARTITION

FURNITURE SCHEDULE

MARK	DESCRIPTION	COMMENTS
PR-1	PROJECTOR SCREEN	GFCI
PS-1	PROJECTION SCREEN, CEILING MOUNTED	GFCI
TV-1	LARGE WALL MOUNTED TELEVISION	GFCI
TV-2	SMALL WALL MOUNTED TELEVISION	GFCI
WB-1	WHITEBOARD	GFCI

AECOM

PROJECT

NEW SECURITY FORCES BUILDING

PAYNE BLVD.
CHARLOTTE, NORTH CAROLINA 28208

CLIENT

NORTH CAROLINA AIR NATIONAL GUARD - 145TH AIRLIFT WING

145th AIRLIFT WING
4930 MINUTEMAN WAY
CHARLOTTE, NORTH CAROLINA 28208

ARCHITECT/DESIGNER

AECOM

277 W NATIONWIDE BLVD
COLUMBUS, OH 43215
614-464-4500

http://www.aecom.com

CONSULTANTS

REGISTRATION

STATE OF OHIO
MARTY SIEBE
1817301
REGISTERED ARCHITECT
5/30/2025

KEY PLAN

8 6 4 2 0 8 16
SCALE: 1/8"=1'-0"

ISSUE/REVISION

I/R	DATE	DESCRIPTION
	5/30/2025	B-3 SUBMITTAL - FINAL

PROJECT NUMBER

60637899
FJRP229030

SHEET TITLE

FLOOR PLAN - LEVEL 2

SHEET NUMBER

A102

N

The drawing has been prepared for the use of AECOM's client and may not be used, reproduced or relied upon by third parties, except as agreed by AECOM and its client, as required by law or for use by governmental reviewing agencies. AECOM accepts no responsibility, and denies any liability whatsoever, to any party that modifies this drawing without AECOM's express written consent. Do not scale this document. All measurements must be obtained from the stated dimensions.

©2023 AECOM Corporation

Project Management Initials: MR Designer: Designer Checker: Checker Approved: Approver ARCH E1 30"x42"
Last Plotted: 5/23/2025 12:12:01 PM
Filename: BM-300-BP-AMER (USA) 60637899-SFNCANG145th3383799_SF-NC ANG_R21_A.rvt
Printed on ___% Post-Consumer Recycled Content Paper

ROOF PLAN NOTES

1. ROOF SPOT ELEVATIONS, WHERE NOTED, ARE APPROXIMATE AND RELATIVE TO THE ROOF DATUM.
2. ROOF SLOPE TO BE 1/2" PER FOOT MIN.
3. DETAILS SHOWN ARE TYPICAL CONDITIONS AT VARYING LOCATIONS WITHIN THE PROJECT. MODIFICATIONS TO THESE DETAILS NECESSARY FOR ROOF SYSTEM MANUFACTURER'S WARRANTED ASSEMBLY SHALL TAKE PRECEDENCE. USE OF ALTERNATE DETAILS DUE TO THE PRECEDING STATEMENT SHALL NOT BE THE BASIS FOR ADDITIONAL COMPENSATION.
4. PROVIDE TAPERED ROOF INSULATION AT CRICKET LOCATIONS FOR POSITIVE DRAINAGE TOWARD ROOF DRAINS AND POSITIVE DRAINAGE AROUND ROOFTOP EQUIPMENT. FOR ALL ITEMS SHOWN OR NOT SHOWN ON ROOF PLAN.
5. THE ROOFTOP WALKWAY PAD LAYOUT IS APPROXIMATE. ADJUST LOCATIONS DURING CONSTRUCTION AS REQUIRED TO ACHIEVE DESIGN INTENT AND TO COORDINATE WITH INSTALLED LOCATIONS OF ALL ROOFTOP EQUIPMENT, PENETRATIONS, DRAINS, AND DRAINAGE PATTERNS.
6. ALL EXPOSED METAL FLASHING AND COUNTERFLASHING, EXPANSION JOINTS, GUTTERS, DOWNSPOUTS, SCUPPERS, AND ASSOCIATED ACCESSORIES, SHALL BE PREFINISHED METAL AS SPECIFIED. COLOR(S) SHALL BE AS SELECTED BY GOVERNMENT.
7. PROVIDE THE ROOF SYSTEM MANUFACTURER'S RECOMMENDED PREFABRICATED BOOTS, ACCESSORIES, CLAMPS AND RELATED MATERIALS AT ALL PENETRATIONS THROUGH THE ROOF (INCLUDING STRUCTURAL, MECHANICAL, PLUMBING, AND ELECTRICAL). REFER TO DISCIPLINE SPECIFIC SHEETS FOR SIZES AND QUANTITIES OF PENETRATIONS. VERIFY EXACT LOCATION IN FIELD. PROPERLY FLASH ALL SUCH PENETRATIONS TO ACHIEVE A WATER-TIGHT INSTALLATION.
8. AT ALL VENT PENETRATIONS THROUGH THE ROOF, OFFSET THE VENT BELOW THE ROOF A MINIMUM OF 18" FROM ANY OTHER ROOFTOP EQUIPMENT OR EXPANSION JOINT. COORDINATE ROUTING IN FIELD WITH PLUMBING CONTRACTOR.
9. ALL ROOFTOP EQUIPMENT REQUIRING SERVICE SHALL BE LOCATED MORE THAN 10 FEET FROM ROOF EDGES.
10. PROVIDE ALL NECESSARY ROOFING ACCESSORIES INCLUDING: REGLETS, BINDER BARS, FLASHING, COLLARS AND BOOTS, FASTENERS, ETC. FOR A COMPLETE WARRANTED ROOF SYSTEM INSULATION.

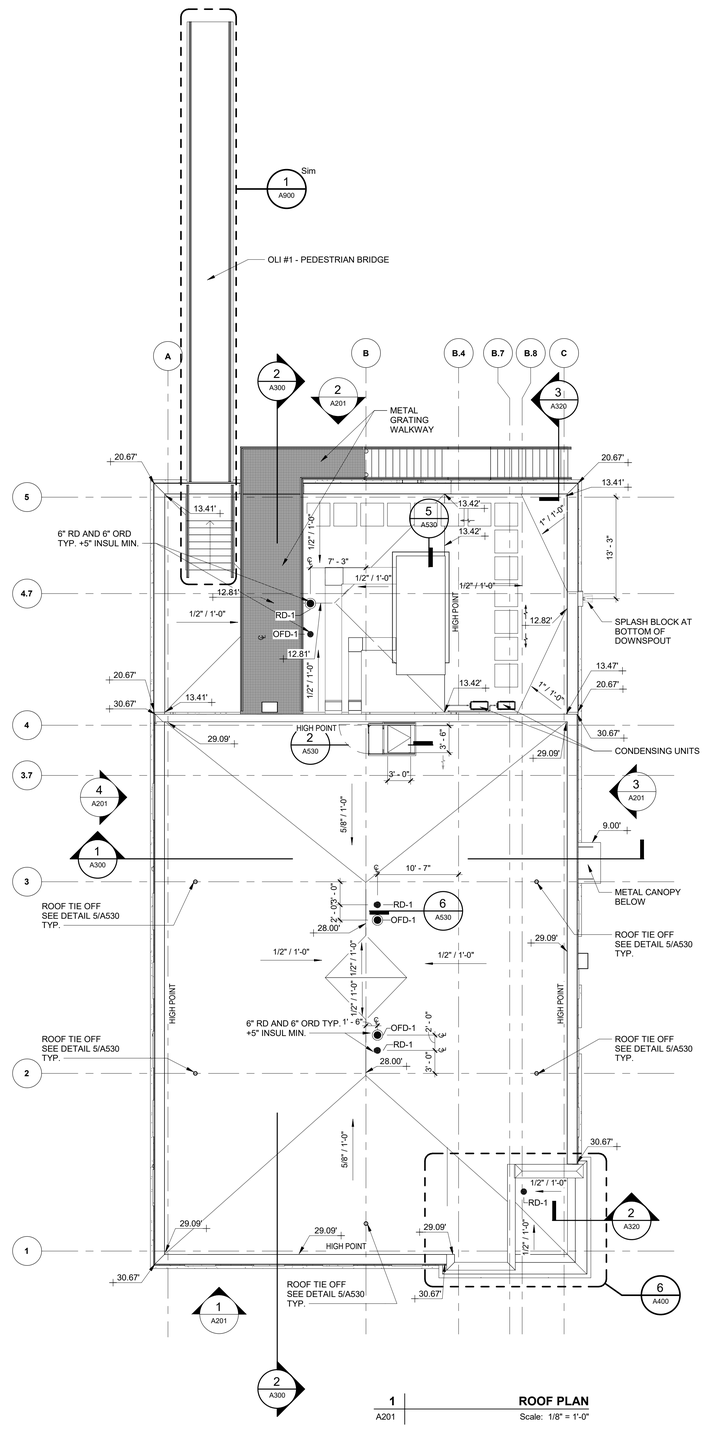

1 A201 **ROOF PLAN**
Scale: 1/8" = 1'-0"

N

AECOM

PROJECT

NEW SECURITY FORCES BUILDING

PAYNE BLVD.
CHARLOTTE, NORTH CAROLINA 28208

CLIENT

NORTH CAROLINA AIR NATIONAL GUARD - 145TH AIRLIFT WING

145th AIRLIFT WING
4930 MINUTEMAN WAY
CHARLOTTE, NORTH CAROLINA 28208

ARCHITECT/DESIGNER

AECOM

277 W NATIONWIDE BLVD
COLUMBUS, OH 43215
614-464-4500

http://www.aecom.com

CONSULTANTS

REGISTRATION

STATE OF OHIO
MARTY SIEBSE
1817301
REGISTERED ARCHITECT
5/30/2025

KEY PLAN

8 6 4 2 0 8 16
SCALE: 1/8"=1'-0"

ISSUE/REVISION

I/R	DATE	DESCRIPTION
	5/30/2025	B-3 SUBMITTAL - FINAL

PROJECT NUMBER

60637899
FJRP229030

SHEET TITLE

ROOF PLAN

SHEET NUMBER

A103

This drawing has been prepared for the use of AECOM's client and may not be used, reproduced or relied upon by third parties, except as agreed by AECOM and its client, as required by law or for use by governmental reviewing agencies. AECOM accepts no responsibility, and denies any liability whatsoever, to any party that modifies this drawing without AECOM's express written consent. Do not scale this document. All measurements must be obtained from the stated dimensions.

©2023 AECOM Corporation

Project Management Initials: MR Designer: Designer Checker: Checker Approved: Approver/ARCH E1.30"x42"
Last Plotted: 5/23/2025 12:12:03 PM
Filename: BM-300-ISP-AMER1(USA) 60637899-SFNCANG145th60637899_SF-NC-ANG_R21_A.rvt

Printed on ___% Post-Consumer Recycled Content Paper

Project Management Initials: MR Designer: Designer Checker: Checker Approved: ApproverARCH E1 30"x42"

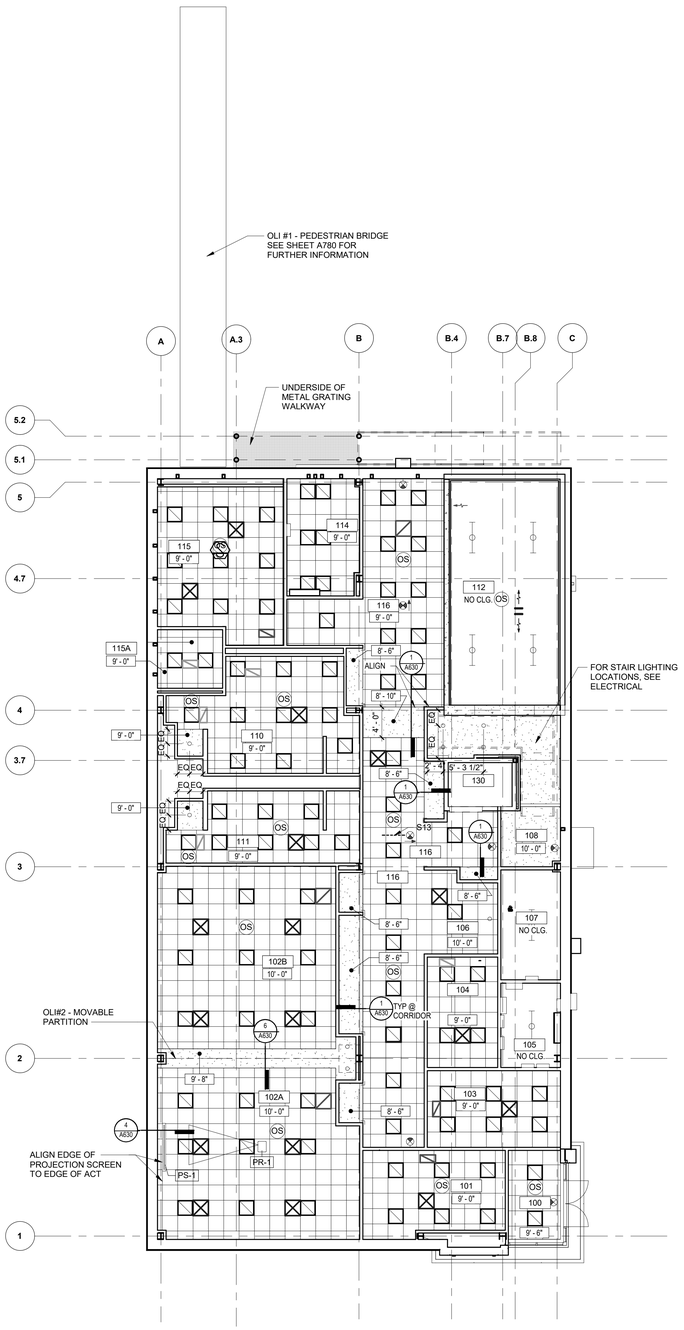

1 A201 **REFLECTED CEILING - LEVEL 1**

Scale: 1/8" = 1'-0"

GENERAL NOTES - REFLECTED CEILING

1. THE TYPICAL CEILING HEIGHT SHALL BE 10' – 0" UNLESS OTHERWISE NOTED.
2. ALL DIMENSIONS ARE TO FACE OF FINISH UNLESS OTHERWISE NOTED.
3. TYPICAL ACOUSTIC CEILING TILE SYSTEM SHALL BE ACT-1 UNLESS OTHERWISE NOTED.
4. ALL CEILING HEIGHTS ARE ABOVE FINISHED FLOOR, UNLESS OTHERWISE NOTED.
5. THE REFLECTED CEILING PLANS SHALL BE USED FOR LAYOUT OF ALL CEILING DEVICES. CONSULT ARCHITECT IF A CONFLICT ARISES WITH STRUCTURAL OR MEP DRAWINGS.
6. CENTER CEILING TILES IN ROOM AS SHOWN TO PROVIDE EQUAL TILES AT EACH END WALL IN EACH DIRECTION UNLESS OTHERWISE NOTED OR DIMENSIONED.
7. CENTER RECESSED LIGHT FIXTURES, ELECTRICAL AND MECHANICAL DEVICES, AND SPRINKLER HEADS WITHIN A CEILING TILE UNLESS OTHERWISE NOTED. COORDINATE LAYOUT WITH ALL OTHER CEILING MOUNTED DEVICES.
8. GYPSUM BOARD SOFFITS ARE SHOWN TO INTENDED SIZES. PAINT ALL GYPSUM BOARD SOFFITS AND HEADERS THE TYPICAL GYPSUM CEILING PAINT COLOR UNLESS OTHERWISE NOTED.
9. AT TOILETS, SHOWERS, AND JANITOR CLOSETS, PROVIDE MOISTURE RESISTANT GYPSUM BOARD AT CEILINGS SOFFITS AND MOLD RESISTANT ACT WHERE INDICATED ON DRAWINGS.
10. COORDINATE EXACT LOCATIONS OF ACCESS PANELS IN THE FIELD, AND WITH CEILING MOUNTED EQUIPMENT VENDORS OR FOR UTILITY CONTROLS ACCESS, WHERE APPLICABLE. ACCESS PANEL PAINT FINISH SHALL MATCH ADJACENT CEILING COLOR.
11. NOT ALL CEILING MOUNTED DEVICES ARE SHOWN ON THE ARCHITECTURAL REFLECTED CEILING PLANS. REFER TO PLUMBING, MECHANICAL, AND ELECTRICAL DRAWINGS FOR LOCATIONS OF SPRINKLER HEADS, EXIT SIGNS, AND ADDITIONAL CEILING MOUNTED DEVICES.
12. NOT ALL SPRINKLER HEADS ARE SHOWN, HOWEVER, ALL AREAS SHALL BE SPRINKLERED AS SPECIFIED. HEADS ARE SHOWN IN SELECTED SPACES TO CONTROL THE LOCATIONS FOR AESTHETIC PURPOSES ONLY. WHEN ADDITIONAL HEADS ARE REQUIRED, COORDINATE LOCATIONS WITH ARCHITECT.

GENERAL NOTES - REFLECTED CEILING LEDGEND

- RECESSED 2x2 LIGHT FIXTURE
- RECESSED LINEAR LIGHT FIXTURE
- RECESSED DOWN LIGHT FIXTURE
- OS — OCCUPANCY SENSOR
- EXIT LIGHT / SIGN
- SUPPLY AIR GRILLE
- RETURN AIR GRILLE
- LINEAR DIFFUSER
- PENDANT FIXTURE
- 2x2 ACOUSTICAL CEILING PANEL, ACT-1
- 2x2 ACOUSTICAL CEILING PANEL, ACCENT ACT-2
- SUSPENDED GYPSUM WALL BOARD CEILING, PT4 (UNO)
- EXPOSED TO STRUCTURE

FURNITURE SCHEDULE

MARK	DESCRIPTION	COMMENTS
PR-1	PROJECTOR SCREEN	GFCI
PS-1	PROJECTION SCREEN, CEILING MOUNTED	GFCI
TV-1	LARGE WALL MOUNTED TELEVISION	GFCI
TV-2	SMALL WALL MOUNTED TELEVISION	GFCI
WB-1	WHITEBOARD	GFCI

AECOM

PROJECT

NEW SECURITY FORCES BUILDING

PAYNE BLVD.
CHARLOTTE, NORTH CAROLINA 28208

CLIENT

NORTH CAROLINA AIR NATIONAL GUARD - 145TH AIRLIFT WING

145th AIRLIFT WING
4930 MINUTEMAN WAY
CHARLOTTE, NORTH CAROLINA 28208

ARCHITECT/DESIGNER

AECOM

277 W NATIONWIDE BLVD
COLUMBUS, OH 43215
614-464-4500

http://www.aecom.com

CONSULTANTS

REGISTRATION

STATE OF OHIO
MARTY SIEESE
1817301
REGISTERED ARCHITECT
5/30/2025

KEY PLAN

8 6 4 2 0 8 16
SCALE: 1/8"=1'-0"

ISSUE/REVISION

I/R	DATE	DESCRIPTION
	5/30/2025	B-3 SUBMITTAL - FINAL

PROJECT NUMBER

60637899
FJRP229030

SHEET TITLE

REFLECTED CEILING PLAN - LEVEL 1

SHEET NUMBER

A150

This drawing has been prepared for the use of AECOM's client and may not be used, reproduced or relied upon by third parties, except as agreed by AECOM and its client, as required by law or for use by governmental reviewing agencies. AECOM accepts no responsibility, and denies any liability whatsoever, to any party that modifies this drawing without AECOM's express written consent. Do not scale this document. All measurements must be obtained from the stated dimensions.

©2023 AECOM Corporation

Printed on ___% Post-Consumer Recycled Content Paper

Last Plotted: 5/30/2025 12:12:34 PM
Filename: BIM 360://SP-NAED/FJRP-NAED/FJRP229030_SF-NC-ANG_R21_A.rvt

Project Management Initials: MR Designer: Designer Checkest: Checker Approved: ApproverARCH E1 30"x42"

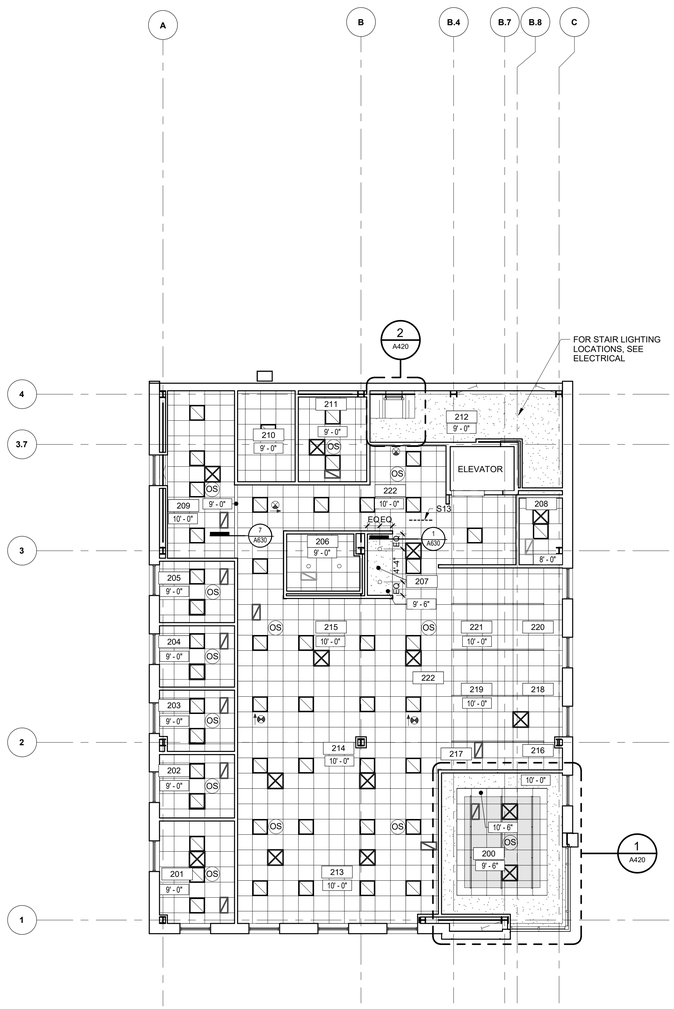

1 A201 **CEILING PLAN - LEVEL 2**
Scale: 1/8" = 1'-0"

GENERAL NOTES - REFLECTED CEILING

1. THE TYPICAL CEILING HEIGHT SHALL BE 10' – 0" UNLESS OTHERWISE NOTED.
2. ALL DIMENSIONS ARE TO FACE OF FINISH UNLESS OTHERWISE NOTED.
3. TYPICAL ACOUSTIC CEILING TILE SYSTEM SHALL BE ACT-1 UNLESS OTHERWISE NOTED.
4. ALL CEILING HEIGHTS ARE ABOVE FINISHED FLOOR, UNLESS OTHERWISE NOTED.
5. THE RELECTED CEILING PLANS SHALL BE USED FOR LAYOUT OF ALL CEILING DEVICES. CONSULT ARCHITECT IF A CONFLICT ARISES WITH STRUCTURAL OR MEP DRAWINGS.
6. CENTER CEILING TILES IN ROOM AS SHOWN TO PROVIDE EQUAL TILES AT EACH END WALL IN EACH DIRECTION UNLESS OTHERWISE NOTED OR DIMENSIONED.
7. CENTER RECESSED LIGHT FIXTURES, ELECTRICAL AND MECHANICAL DEVICES, AND SPRINKLER HEADS WITHIN A CEILING TILE UNLESS OTHERWISE NOTED. COORDINATE LAYOUT WITH ALL OTHER CEILING MOUNTED DEVICES.
8. GYPSUM BOARD SOFFITS ARE SHOWN TO INTENDED SIZES. PAINT ALL GYPSUM BOARD SOFFITS AND HEADERS THE TYPICAL GYPSUM CEILING PAINT COLOR UNLESS OTHERWISE NOTED.
9. AT TOILETS, SHOWERS, AND JANITOR CLOSETS, PROVIDE MOISTURE RESISTANT GYPSUM BOARD AT CEILINGS SOFFITS AND MOLD RESISTANT ACT WHERE INDICATED ON DRAWINGS.
10. COORDINATE EXACT LOCATIONS OF ACCESS PANELS IN THE FIELD, AND WITH CEILING MOUNTED EQUIPMENT VENDORS OR FOR UTILITY CONTROLS ACCESS, WHERE APPLICABLE. ACCESS PANEL PAINT FINISH SHALL MATCH ADJACENT CEILING COLOR.
11. NOT ALL CEILING MOUNTED DEVICES ARE SHOWN ON THE ARCHITECTURAL REFLECTED CEILING PLANS. REFER TO PLUMBING, MECHANICAL, AND ELECTRICAL DRAWINGS FOR LOCATIONS OF SPRINKLER HEADS, EXIT SIGNS, AND ADDITIONAL CEILING MOUNTED DEVICES.
12. NOT ALL SPRINKLER HEADS ARE SHOWN, HOWEVER, ALL AREAS SHALL BE SPRINKLERED AS SPECIFIED. HEADS ARE SHOWN IN SELECTED SPACES TO CONTROL THE LOCATIONS FOR AESTHETIC PURPOSES ONLY. WHEN ADDITIONAL HEADS ARE REQUIRED, COORDINATE LOCATIONS WITH ARCHITECT.

GENERAL NOTES - REFLECTED CEILING LEDGEND

- RECESSED 2x2 LIGHT FIXTURE
- RECESSED LINEAR LIGHT FIXTURE
- RECESSED DOWN LIGHT FIXTURE
- OS — OCCUPANCY SENSOR
- EXIT LIGHT / SIGN
- SUPPLY AIR GRILLE
- RETURN AIR GRILLE
- LINEAR DIFFUSER
- PENDANT FIXTURE
- 2x2 ACOUSTICAL CEILING PANEL, ACT-1
- 2x2 ACOUSTICAL CEILING PANEL, ACCENT ACT-2
- SUSPENDED GYPSUM WALL BOARD CEILING, PT4 (UNO)
- EXPOSED TO STRUCTURE

FURNITURE SCHEDULE

MARK	DESCRIPTION	COMMENTS
PR-1	PROJECTOR SCREEN	GFCI
PS-1	PROJECTION SCREEN, CEILING MOUNTED	GFCI
TV-1	LARGE WALL MOUNTED TELEVISION	GFCI
TV-2	SMALL WALL MOUNTED TELEVISION	GFCI
WB-1	WHITEBOARD	GFCI

N

This drawing has been prepared for the use of AECOM's client and may not be used, reproduced or relied upon by third parties, except as agreed by AECOM and its client, as required by law or for use by governmental reviewing agencies. AECOM accepts no responsibility, and denies any liability whatsoever, to any party that modifies this drawing without AECOM's express written consent. Do not scale this document. All measurements must be obtained from the stated dimensions.

AECOM

PROJECT

NEW SECURITY FORCES BUILDING

PAYNE BLVD.
CHARLOTTE, NORTH CAROLINA 28208

CLIENT

NORTH CAROLINA AIR NATIONAL GUARD - 145TH AIRLIFT WING

145th AIRLIFT WING
4930 MINUTEMAN WAY
CHARLOTTE, NORTH CAROLINA 28208

ARCHITECT/DESIGNER

AECOM

277 W NATIONWIDE BLVD
COLUMBUS, OH 43215
614-464-4500

http://www.aecom.com

CONSULTANTS

REGISTRATION

STATE OF OHIO
MARTY SIEESE
1817301
REGISTERED ARCHITECT
5/30/2025

KEY PLAN

8 6 4 2 0 8 16
SCALE: 1/8"=1'-0"

ISSUE/REVISION

I/R	DATE	DESCRIPTION
	5/30/2025	B-3 SUBMITTAL - FINAL

PROJECT NUMBER

60637899
FJRP229030

SHEET TITLE

REFLECTED CEILING PLAN - LEVEL 2

SHEET NUMBER

A151

©2023 AECOM Corporation

Printed on ___% Post-Consumer Recycled Content Paper

Last Plotted: 5/30/2025 12:12:05 PM
Filename: BIM 360://BP-NAEEN (USA) (60637899)-SFNCANG145th60637899_SF-NC-ANG_R21_A.rvt

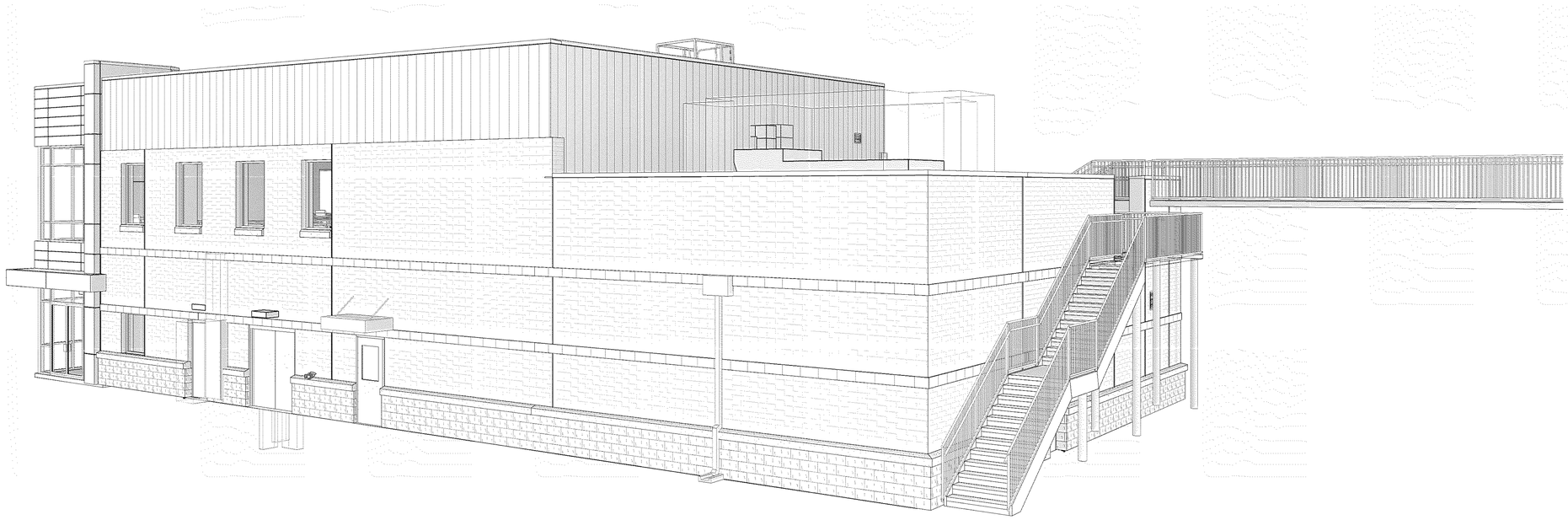

1 **EXTERIOR PERSPECTIVE**
Scale:

2 **EXTERIOR PERSPECTIVE**
Scale:

AECOM

PROJECT

NEW SECURITY FORCES BUILDING

PAYNE BLVD.
CHARLOTTE, NORTH CAROLINA 28208

CLIENT

NORTH CAROLINA AIR NATIONAL GUARD - 145TH AIRLIFT WING

145th AIRLIFT WING
4930 MINUTEMAN WAY
CHARLOTTE, NORTH CAROLINA 28208

ARCHITECT/DESIGNER

AECOM

277 W NATIONWIDE BLVD
COLUMBUS, OH 43215
614-464-4500

http://www.aecom.com

CONSULTANTS

REGISTRATION

STATE OF OHIO
MARTY SEESE
1817301
REGISTERED ARCHITECT
5/30/2025

KEY PLAN

ISSUE/REVISION

I/R	DATE	DESCRIPTION
	5/30/2025	B-3 SUBMITTAL - FINAL

PROJECT NUMBER

60637899
FJRP229030

SHEET TITLE

EXTERIOR PERSPECTIVES

SHEET NUMBER

A200

This drawing has been prepared for the use of AECOM's client and may not be used, reproduced or relied upon by third parties, except as agreed by AECOM and its client, as required by law or for use by governmental reviewing agencies. AECOM accepts no responsibility, and denies any liability whatsoever to any party that modifies this drawing without AECOM's express written consent. Do not scale this document. All measurements must be obtained from the stated dimensions.

©2023 AECOM Corporation

Project Management Initials: MR Designer: Designer Checker: Checker Approved: ApproverARCH E1 30"x42"

Last Plotted: 5/30/2025 12:12:31 PM
Filename: BM 360:/BP-NAEEN (USA) 60637899-SFNCANG145th60637899_SF-NC-ANG_R21_A.rvt

Printed on ___% Post-Consumer Recycled Content Paper

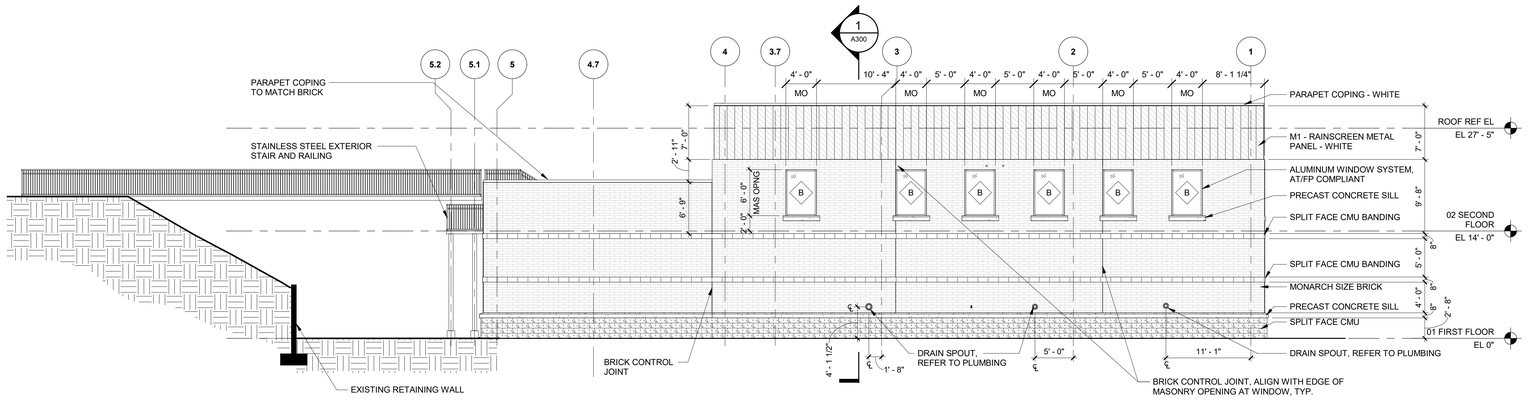

4 / A101 — WEST ELEVATION
Scale: 1/8" = 1'-0"

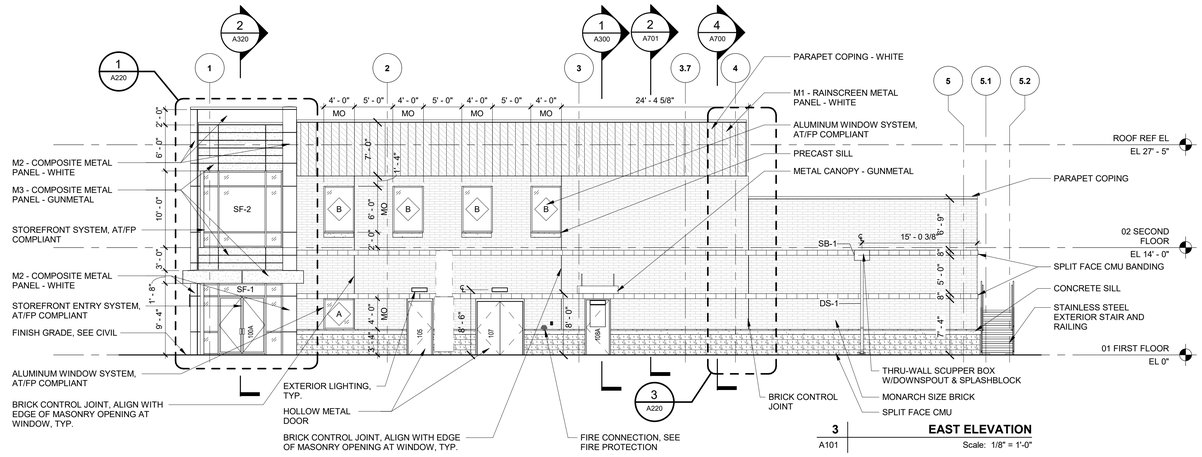

3 / A101 — EAST ELEVATION
Scale: 1/8" = 1'-0"

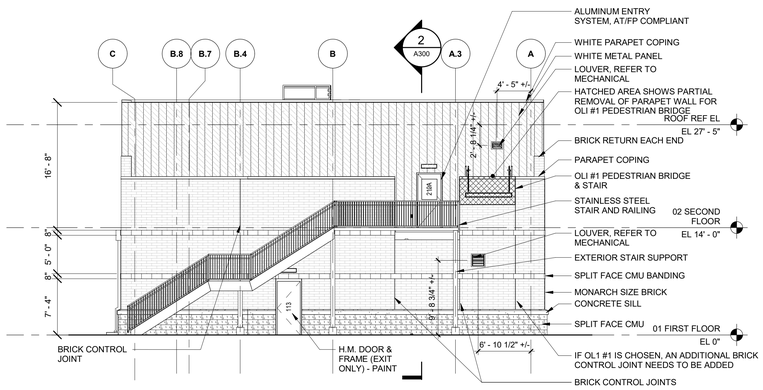

2 / A101 — NORTH ELEVATION
Scale: 1/8" = 1'-0"

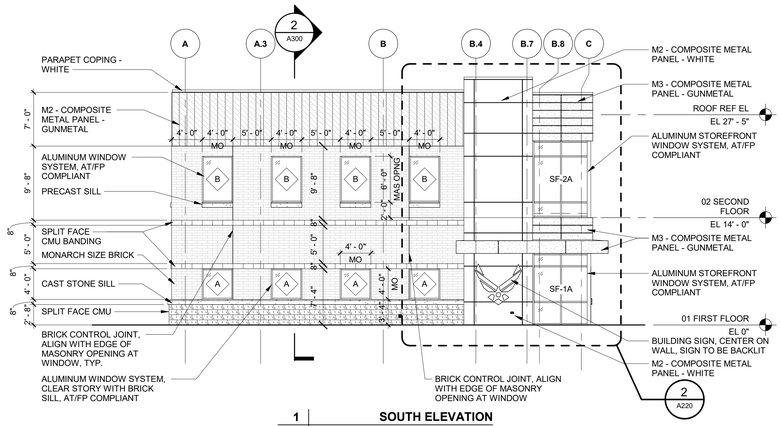

1 / A101 — SOUTH ELEVATION
Scale: 1/8" = 1'-0"

GENERAL NOTES - EXTERIOR ELEVATIONS

1. OVERALL DIMENSIONS PROVIDED ARE FROM COLUMN CENTERLINE TO COLUMN CENTERLINE OR TO ROUGH OPENINGS (OF DOORS AND GLAZING FRAMES), UNLESS OTHERWISE NOTED.
2. VERTICAL DIMENSIONS ARE REFERENCED FROM THE GIVEN FINISHED FLOOR ELEVATION(S).
3. THE BENCHMARK ELEVATION OF 100' - 0" = 714.26' ON THE CIVIL DRAWINGS.
4. FOR ANY BUILDING ELEMENTS NOT LOCATED CONTRACTOR SHALL VERIFY DIMENSIONS PRIOR TO INITIATING CONSTRUCTION.
5. PROVIDE SEALANT AND BACKER ROD AT EXTERIOR JOINTS AND GAPS BETWEEN ADJACENT BUILDING MATERIALS UNLESS OTHERWISE NOTED.
6. EXPOSED EXTERIOR STEEL ITEMS SHALL BE GALVANIZED AND PAINTED UNLESS OTHERWISE NOTED.
7. THE EXTERIOR ELEVATIONS ARE INTENDED TO SHOW ALL EXTERIOR BUILDING ENVELOPE MATERIALS AND LOCATIONS, INCLUDING DOOR, LOUVER, WINDOW, AND CURTAINWALL TYPES.
8. ALL EXTERIOR WOOD BLOCKING SHALL BE MOISTURE RESISTANT TREATED.
9. SEE CIVIL PLANS FOR GRADING, FINISHES, THICKNESS, REINFORCING, CONTROL AND EXPANSION JOINTS OF WALKS AND ALL HARDSCAPING PAVED AREAS.
10. REFER TO SHEET A680 FOR DOOR SCHEDULE AND DOOR DETAILS / INFORMATION.
11. REFER TO SHEET A240 FOR STOREFRONT INFORMATION.
12. EXTERIOR LIGHTS OVER DOORS TO BE CENTERED OVER DOOR OPENING, TYPICAL

EXTERIOR ELEVATIONS LEGEND

- SPLIT FACE CMU
- UTILITY SIZE BRICK
- CMU BANDING
- M1 - RAINSCREEN METAL PANEL - WHITE
- M2 - COMPOSITE METAL PANEL - WHITE
- M3 - COMPOSITE METAL PANEL - GUNMETAL
- GLASS

AECOM

PROJECT
NEW SECURITY FORCES BUILDING
PAYNE BLVD.
CHARLOTTE, NORTH CAROLINA 28208

CLIENT
NORTH CAROLINA AIR NATIONAL GUARD - 145TH AIRLIFT WING
145th AIRLIFT WING
4930 MINUTEMAN WAY
CHARLOTTE, NORTH CAROLINA 28208

ARCHITECT/DESIGNER
AECOM
277 W NATIONWIDE BLVD
COLUMBUS, OH 43215
614-464-4500

http://www.aecom.com

CONSULTANTS

REGISTRATION

STATE OF OHIO
MARTY SEESE
1817301
REGISTERED ARCHITECT
5/30/2025

KEY PLAN

8 6 4 2 0 8 16
SCALE: 1/8"=1'-0"

ISSUE/REVISION

I/R	DATE	DESCRIPTION
	5/30/2025	B-3 SUBMITTAL - FINAL

PROJECT NUMBER
60637899
FJRP229030

SHEET TITLE
EXTERIOR ELEVATIONS

SHEET NUMBER
A201

This drawing has been prepared for the use of AECOM's client and may not be used, reproduced or relied upon by third parties, except as agreed by AECOM and its client, as required by law or for use by governmental reviewing agencies. AECOM accepts no responsibility, and denies any liability whatsoever, to any party that modifies this drawing without AECOM's express written consent. Do not scale this document. All measurements must be obtained from the stated dimensions.

©2023 AECOM Corporation

Project Management Initials: MR Designer: Designer Checker: Checker Approved: ApproverARCH E1 30"x42"
Last Plotted: 5/23/2025 12:12:37 PM
Filename: BIM 360://FJRP-AMER-USA) 60637899-SFNCANG145BG37899_SF-NC ANG_R21_A.rvt
Printed on ___% Post-Consumer Recycled Content Paper

Project Management Initials: MR Designer: Designer Checker: Checker Approved: Approver ARCH E1 30"x42"

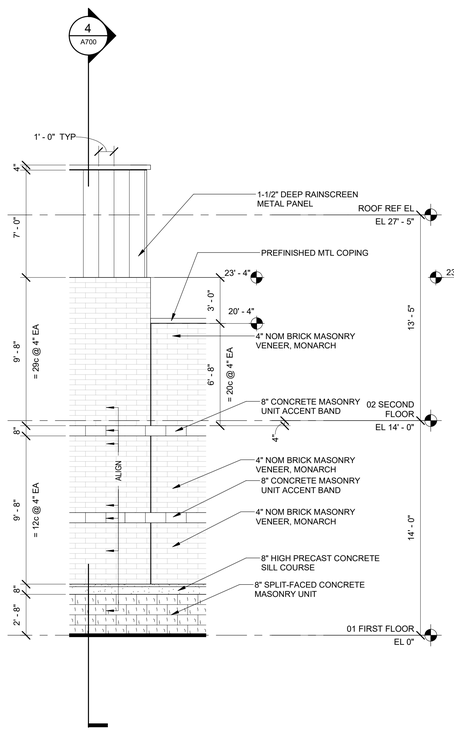

3 | ENLARGED MAS EL
A201 | Scale: 1/4" = 1'-0"

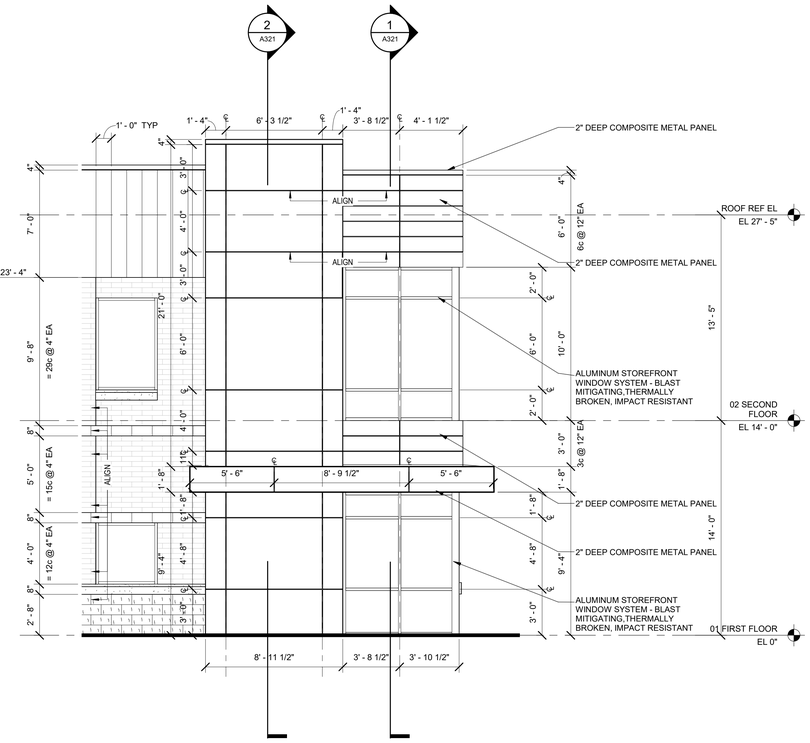

2 | PARTIAL ENLARGED SOUTH EXT EL
A201 | Scale: 1/4" = 1'-0"

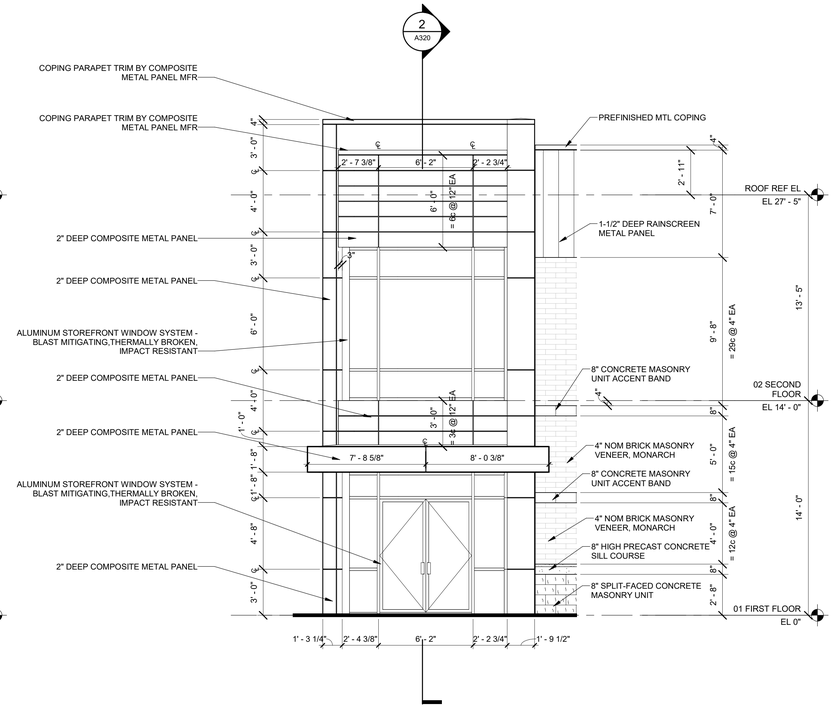

1 | PARTIAL ENLARGED EAST EL
A201 | Scale: 1/4" = 1'-0"

This drawing has been prepared for the use of AECOM's client and may not be used, reproduced or relied upon by third parties, except as agreed by AECOM and its client, as required by law or for use by governmental reviewing agencies. AECOM accepts no responsibility, and denies any liability whatsoever, to any party that modifies this drawing without AECOM's express written consent. Do not scale this document. All measurements must be obtained from the stated dimensions.

AECOM

PROJECT

NEW SECURITY FORCES BUILDING

PAYNE BLVD.
CHARLOTTE, NORTH CAROLINA 28208

CLIENT

NORTH CAROLINA AIR NATIONAL GUARD - 145TH AIRLIFT WING

145th AIRLIFT WING
4930 MINUTEMAN WAY
CHARLOTTE, NORTH CAROLINA 28208

ARCHITECT/DESIGNER

AECOM

277 W NATIONWIDE BLVD
COLUMBUS, OH 43215
614-464-4500

http://www.aecom.com

CONSULTANTS

REGISTRATION

STATE OF OHIO
MARTY SIEESE
1817301
REGISTERED ARCHITECT
5/30/2025

KEY PLAN

4 3 2 1 0 4 8
SCALE: 1/4"=1'-0"

ISSUE/REVISION

I/R	DATE	DESCRIPTION
	5/30/2025	B-3 SUBMITTAL - FINAL

PROJECT NUMBER

60637899
FJRP229030

SHEET TITLE

ENLARGED EXTERIOR ELEVATIONS

SHEET NUMBER

A220

©2023 AECOM Corporation

Last Plotted: 5/23/2025 12:12:39 PM
Filename: BIM 360://BP-AMER (USA) 60637899-SFNCANG145/60637899_SF-NC ANG_R21_A.rvt

Printed on ___% Post-Consumer Recycled Content Paper

GENERAL NOTES - GLAZING

1. ALL FINAL DIMENSIONS OF WINDOWS NEED TO BE FIELD VERIFIED AND APPROVED IN SHOP DRAWING REVIEWS BY THE ARCHITECT. ALL PLAN DIMENSIONS ARE R.O. OPENING DIMENSIONS, PLAN DIMENSIONS VARY BASED ON FIELD CONDITIONS AND REQUIRED SHIM SPACE.
2. ALL EXTERIOR STOREFRONT TO RECEIVE 1" CLEAR INSULATED LAMINATED GLASS THAT US AT/FP COMPLIANT, UON
3. REFER TO SPECIFICATIONS FOR MORE INFORMATION ON GLAZING.
4. ALL STOREFRONT MULLIONS ARE TO BE 2" X 4 1/2" UON
5. PROVIDE TEMPERED GLASS (T) AS INDICATED ON THE DRAWINGS.
6. ALL INTERIOR WINDOW FRAMES TO BE HOLLOW METAL.

(T) TEMPERED GLASS

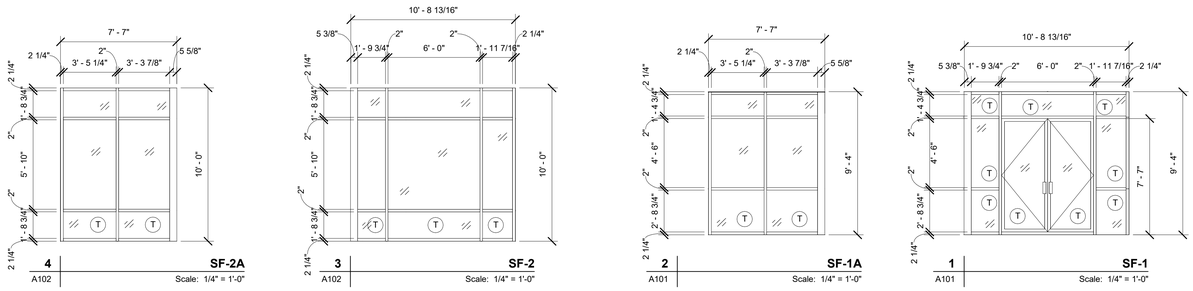

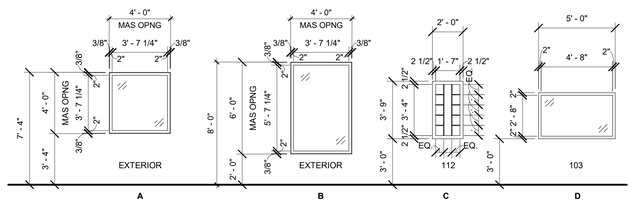

WINDOW LEGEND
Scale: 1/4" = 1'-0"

AECOM

PROJECT

NEW SECURITY FORCES BUILDING

PAYNE BLVD.
CHARLOTTE, NORTH CAROLINA 28208

CLIENT

NORTH CAROLINA AIR NATIONAL GUARD - 145TH AIRLIFT WING

145th AIRLIFT WING
4930 MINUTEMAN WAY
CHARLOTTE, NORTH CAROLINA 28208

ARCHITECT/DESIGNER

AECOM

277 W NATIONWIDE BLVD
COLUMBUS, OH 43215
614-464-4500

http://www.aecom.com

CONSULTANTS

REGISTRATION

STATE OF OHIO
MARTY SIEESE
1817301
REGISTERED ARCHITECT
5/30/2025

KEY PLAN

4 3 2 1 0 4 8
SCALE: 1/4"=1'-0"

ISSUE/REVISION

I/R	DATE	DESCRIPTION
	5/30/2025	B-3 SUBMITTAL - FINAL

PROJECT NUMBER

60637899
FJRP229030

SHEET TITLE

CURTAINWALL / WINDOW ELEVATIONS

SHEET NUMBER

A240

This drawing has been prepared for the use of AECOM's client and may not be used, reproduced or relied upon by third parties, except as agreed by AECOM and its client, as required by law or for use by governmental reviewing agencies. AECOM accepts no responsibility, and denies any liability whatsoever, to any party that modifies this drawing without AECOM's express written consent. Do not scale this document. All measurements must be obtained from the stated dimensions.

Project Management Initials: MR Designer: Designer Checker: Checker Approved: ApproverARCH E1 30"x42"
Last Plotted: 5/30/2025 12:12:41 PM
Filename: BM-360-ISP-AMER-(USA) (60637899-SFNCANG145thWG37899_SF-NC-ANG_R21_A.rvt

Printed on ___% Post-Consumer Recycled Content Paper
©2023 AECOM Corporation

GENERAL NOTES - BUILDING SECTION

1. THE BUILDING EXTERIOR ENVELOPE IS DESIGNED TO COMPLY WITH REQUIREMENTS OF ASHRAE 90.1, 2013 EDITION. FOR THE ENVELOPE COMPONENT, ZONE LOCATION, AND ASSOCIATED U-FACTOR. REFER TO THE CODE ANALYSIS SHEET FOR ALL ASSOCIATED VALUES.
2. ALL MATERIALS AND INFORMATION NOTED ON ANY OF THE WALL SECTIONS OR DETAILS APPLIES TO ALL OTHER SECTIONS AND DETAILS WHERE SIMILAR CONDITIONS OCCUR.
3. AT EXTERIOR LOAD BEARING METAL STUD FRAMING, STUDS SHALL BE A MINIMUM 16 GAUGE AND 16" ON CENTER MAXIMUM. FINAL DESIGN AND CALCULATIONS ARE DELEGATED DESIGN BY THE METAL STUD SUPPLIER/CONTRACTOR.
4. REFER TO THE ARCHITECTURAL FLOOR PLAN SERIES AND EXTERIOR ELEVATION SERIES FOR WINDOW, LOUVER, AND DOOR TYPE DESIGNATIONS.
5. PROVIDE FLASHING AT ALL HORIZONTAL OBSTRUCTIONS IN WALL CAVITIES.
6. THE PERIMETER OF THE BUILDING SHALL RECEIVE 2" FOUNDATION INSULATION ON LIQUID APPLIED WATERPROOFING - TYPICAL.
7. SUBGRADE ITEMS, (SUCH AS EARTH, GRAVEL, BACKFILL, ETC.) ARE INCLUDED FOR GENERAL INTENT ONLY. REFER TO STRUCTURAL AND CIVIL DRAWINGS FOR ACTUAL SITE AND FOUNDATION REQUIREMENTS.
8. THE TYPICAL ROOF SYSTEM IS DESCRIBED IN THE ROOF GENERAL NOTES AND IN THE SPECIFICATIONS.

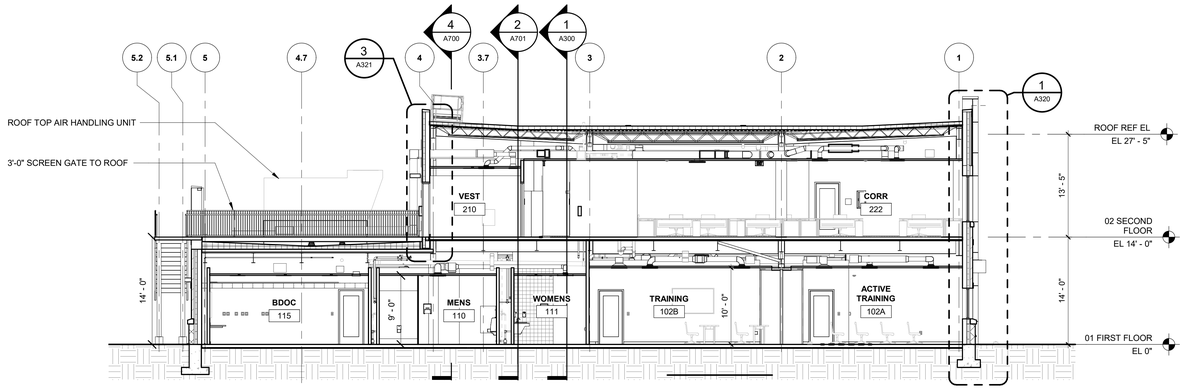

2 A101 **LONGITUDINAL BUILDING SECTION**
Scale: 1/8" = 1'-0"

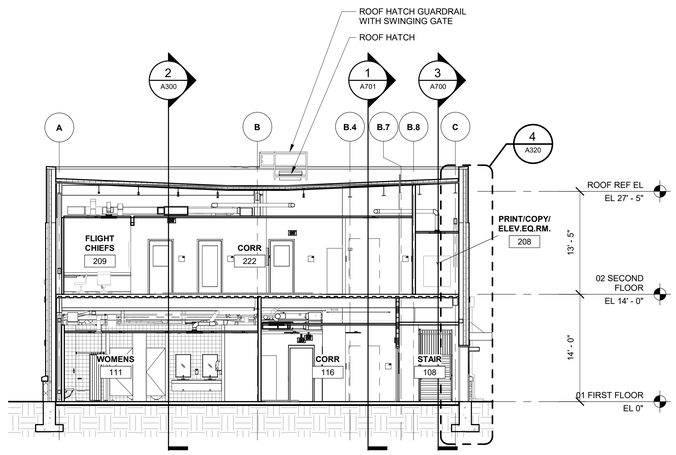

1 A101 **TRANSVERSE BUILDING SECTION**
Scale: 1/8" = 1'-0"

AECOM

PROJECT

NEW SECURITY FORCES BUILDING

PAYNE BLVD.
CHARLOTTE, NORTH CAROLINA 28208

CLIENT

NORTH CAROLINA AIR NATIONAL GUARD - 145TH AIRLIFT WING

145th AIRLIFT WING
4930 MINUTEMAN WAY
CHARLOTTE, NORTH CAROLINA 28208

ARCHITECT/DESIGNER

AECOM

277 W NATIONWIDE BLVD
COLUMBUS, OH 43215
614-464-4500

http://www.aecom.com

CONSULTANTS

REGISTRATION

STATE OF OHIO
MARTY SEESE
1817301
REGISTERED ARCHITECT
5/30/2025

KEY PLAN

8 6 4 2 0 8 16
SCALE: 1/8"=1'-0"

ISSUE/REVISION

I/R	DATE	DESCRIPTION
	5/30/2025	B-3 SUBMITTAL - FINAL

PROJECT NUMBER

60637899
FJRP229030

SHEET TITLE

BUILDING SECTIONS

SHEET NUMBER

A300

This drawing has been prepared for the use of AECOM's client and may not be used, reproduced or relied upon by third parties, except as agreed by AECOM and its client, as required by law or for use by governmental reviewing agencies. AECOM accepts no responsibility, and denies any liability whatsoever to any party that modifies this drawing without AECOM's express written consent. Do not scale this document. All measurements must be obtained from the stated dimensions.

©2023 AECOM Corporation

Project Management Initials: MR Designer: Designer Checker: Checker Approved: Approver/ARCH E1 30"x42"
Last Plotted: 5/30/2025 12:12:46 PM
Filename: DM 060-060-PA4ZX (USA) 60637899-SFNCANG145th60637899_SF-NC-ANG_R21_A.rvt

Printed on ___% Post-Consumer Recycled Content Paper

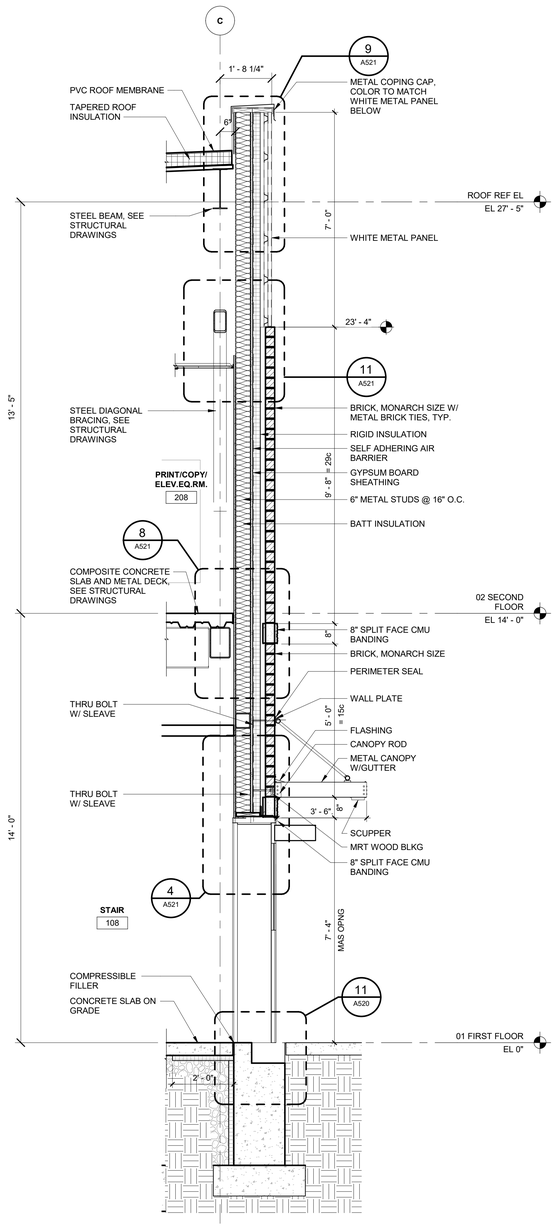

4 | WALL SECTION 4
A300 | Scale: 1/2" = 1'-0"

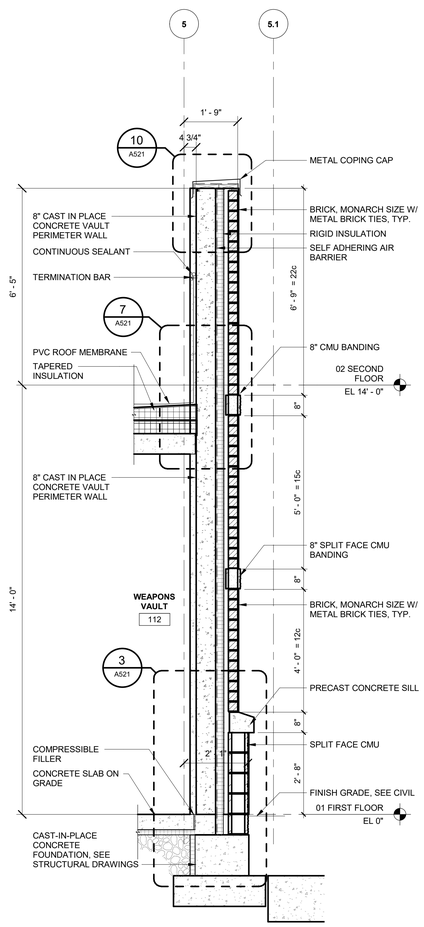

3 | WALL SECTION 3
A101 | Scale: 1/2" = 1'-0"

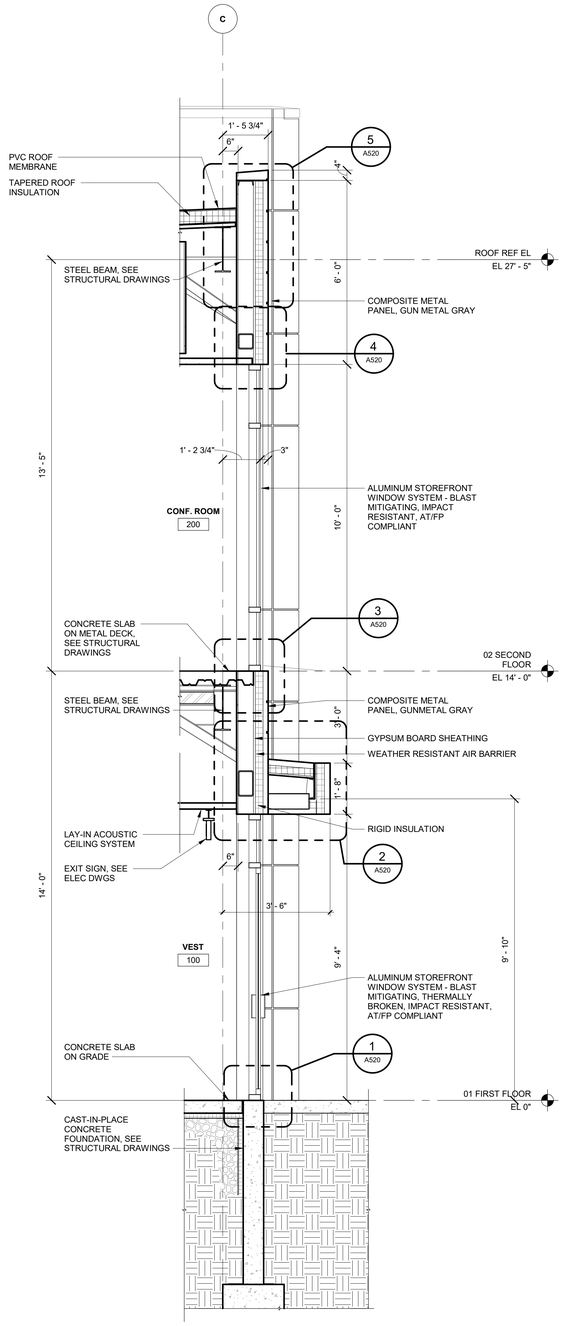

2 | WALL SECTION - ENTRY
A101 | Scale: 1/2" = 1'-0"

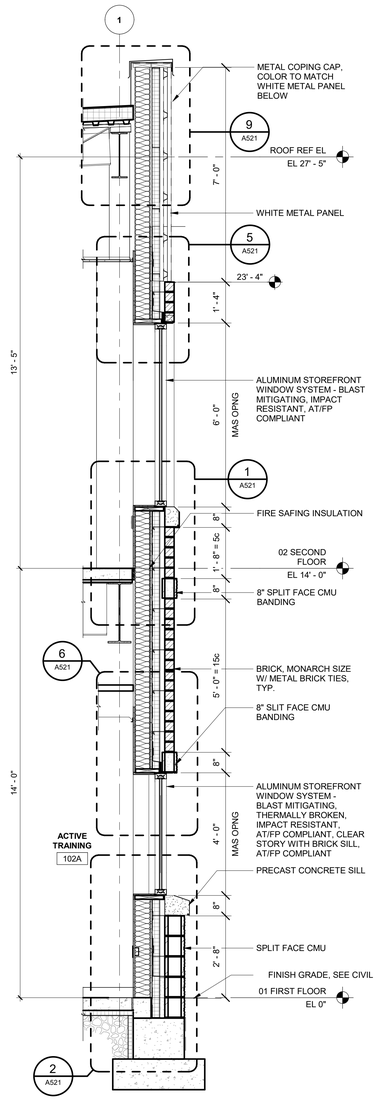

1 | WALL SECTION 1
A300 | Scale: 1/2" = 1'-0"

AECOM

PROJECT

NEW SECURITY FORCES BUILDING

PAYNE BLVD.
CHARLOTTE, NORTH CAROLINA 28208

CLIENT

NORTH CAROLINA AIR NATIONAL GUARD - 145TH AIRLIFT WING

145th AIRLIFT WING
4930 MINUTEMAN WAY
CHARLOTTE, NORTH CAROLINA 28208

ARCHITECT/DESIGNER

AECOM

277 W NATIONWIDE BLVD
COLUMBUS, OH 43215
614-464-4500

http://www.aecom.com

CONSULTANTS

REGISTRATION

STATE OF OHIO
MARTY SEESE
1817301
REGISTERED ARCHITECT
5/30/2025

KEY PLAN

2 1 0 2 4
SCALE: 1/2"=1'-0"

ISSUE/REVISION

I/R	DATE	DESCRIPTION
	5/30/2025	B-3 SUBMITTAL - FINAL

PROJECT NUMBER

60637899
FJRP229030

SHEET TITLE

WALL SECTIONS

SHEET NUMBER

A320

This drawing has been prepared for the use of AECOM's client and may not be used, reproduced or relied upon by third parties, except as agreed by AECOM and its client, as required by law or for use by governmental reviewing agencies. AECOM accepts no responsibility, and denies any liability whatsoever, to any party that modifies this drawing without AECOM's express written consent. Do not scale this document. All measurements must be obtained from the stated dimensions.

©2023 AECOM Corporation

Project Management Initials: MR Designer: Designer Checker: Checker Approved: Approver ARCH E1 30"x42"
Last Plotted: 5/30/2025 12:12:30 PM
Filename: BM 060-09P-RMEEP (USA) (60637899-SFNCANG145thB0637899_SF-NC-ANG_R21_A.rvt
Printed on ___% Post-Consumer Recycled Content Paper

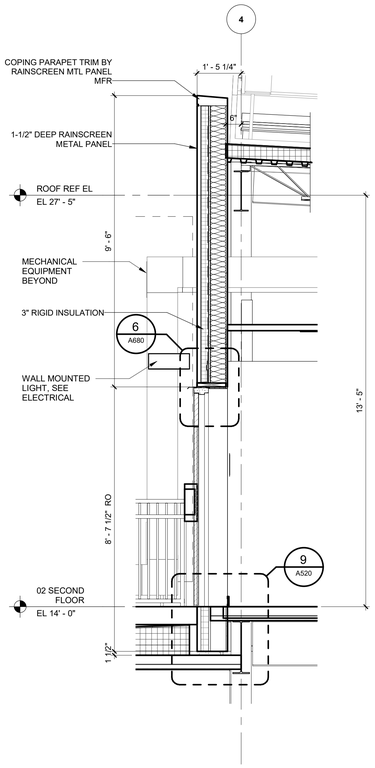

3 A300 **WALL SECTION - ROOF**
Scale: 1/2" = 1'-0"

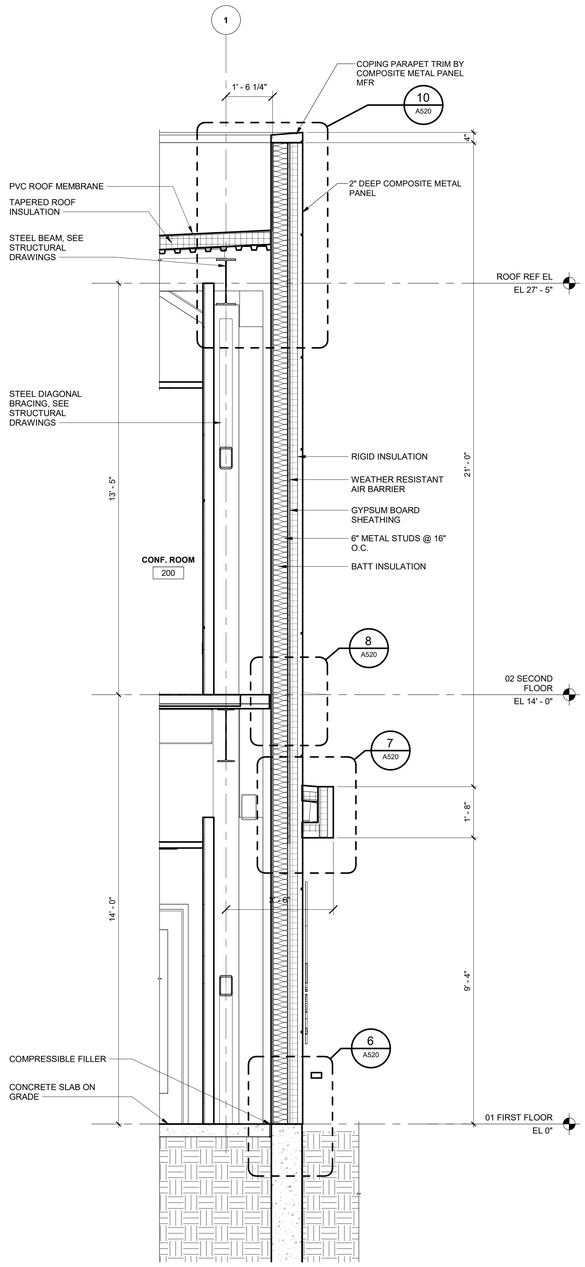

2 A220 **WALL SECTION - ENTRY**
Scale: 1/2" = 1'-0"

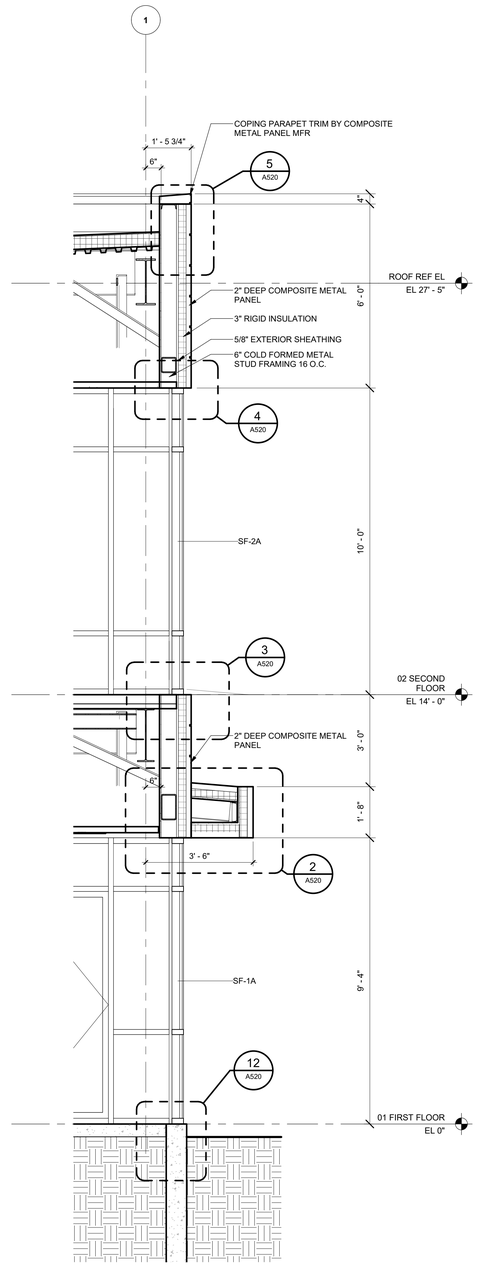

1 A220 **WALL SECTION - ENTRY**
Scale: 1/2" = 1'-0"

AECOM

PROJECT
NEW SECURITY FORCES BUILDING
PAYNE BLVD.
CHARLOTTE, NORTH CAROLINA 28208

CLIENT
NORTH CAROLINA AIR NATIONAL GUARD - 145TH AIRLIFT WING
145th AIRLIFT WING
4930 MINUTEMAN WAY
CHARLOTTE, NORTH CAROLINA 28208

ARCHITECT/DESIGNER
AECOM
277 W NATIONWIDE BLVD
COLUMBUS, OH 43215
614-464-4500

http://www.aecom.com

CONSULTANTS

REGISTRATION

KEY PLAN

2 1 0 2 4
SCALE: 1/2"=1'-0"

ISSUE/REVISION

I/R	DATE	DESCRIPTION
	5/30/2025	B-3 SUBMITTAL - FINAL

PROJECT NUMBER
60637899
FJRP229030

SHEET TITLE
WALL SECTIONS

SHEET NUMBER
A321

The drawing has been prepared for the use of AECOM's client and may not be used, reproduced or relied upon by third parties, except as agreed by AECOM and its client, as required by law or for use by governmental reviewing agencies. AECOM accepts no responsibility, and denies any liability whatsoever to any party that modifies this drawing without AECOM's express written consent. Do not scale this document. All measurements must be obtained from the stated dimensions.

©2023 AECOM Corporation

Project Management Initials: MR Designer: Designer Checker: Checker Approved: Approver/ARCH E1 30"x42"
Last Plotted: 5/23/2025 12:12:32 PM
Filename: BM-300-ISP-AMER (USA) 60637899-SFNCANG145th0037899_SF-NC ANG_R21_A.rvt
Printed on ___% Post-Consumer Recycled Content Paper

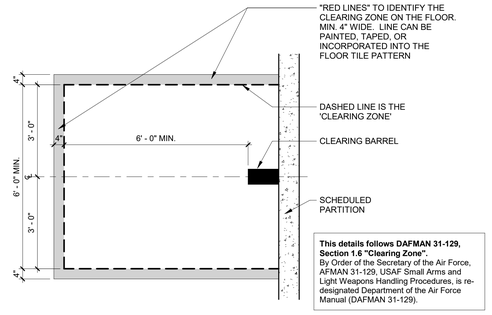

9 A101 **CLEARING BARREL ENLARGED PLAN**
Scale: 1/2" = 1'-0"

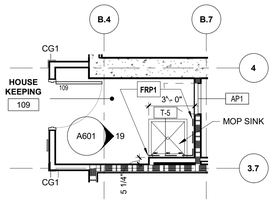

8 A101 **HOUSEKEEPING - LEVEL 1**
Scale: 1/4" = 1'-0"

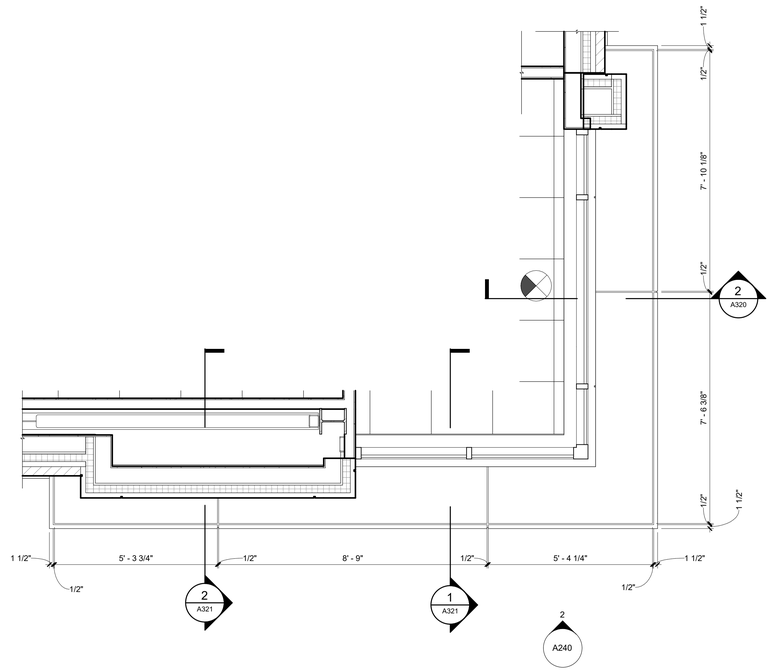

7 **ENTRY CANOPY SOFFIT - RCP**
Scale: 1/2" = 1'-0"

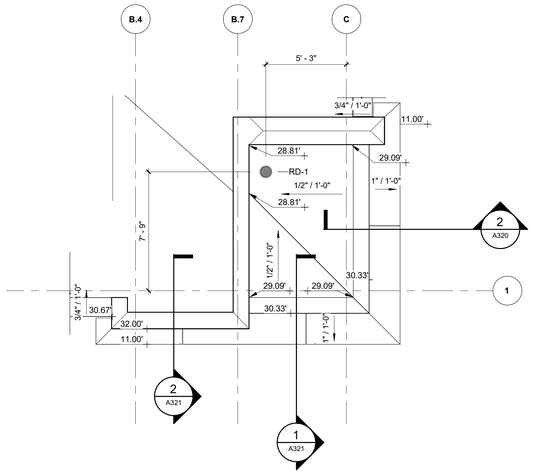

6 A103 **PARTIAL ROOF PLAN - ENTRY**
Scale: 1/4" = 1'-0"

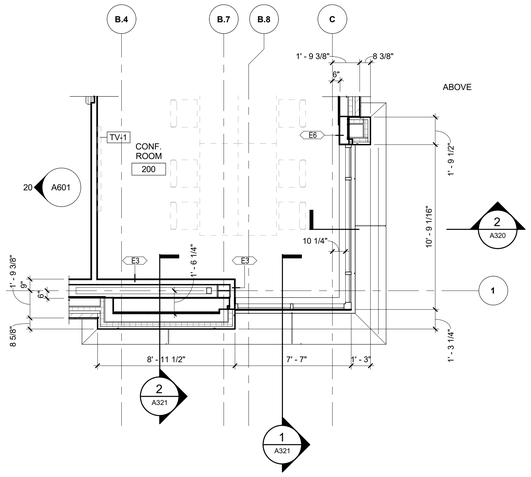

5 A102 **PARTIAL SECOND FLR - ENTRY**
Scale: 1/4" = 1'-0"

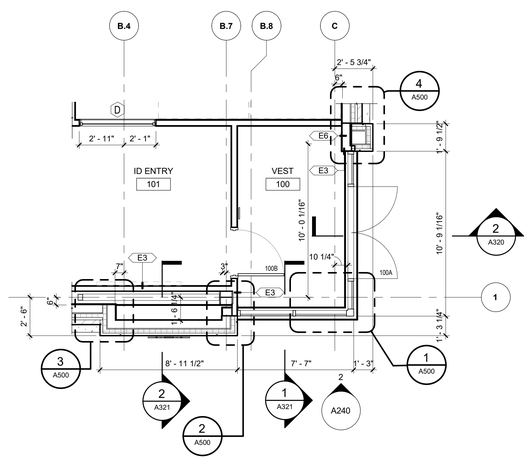

4 A101 **PARTIAL FIRST FLR - ENTRY**
Scale: 1/4" = 1'-0"

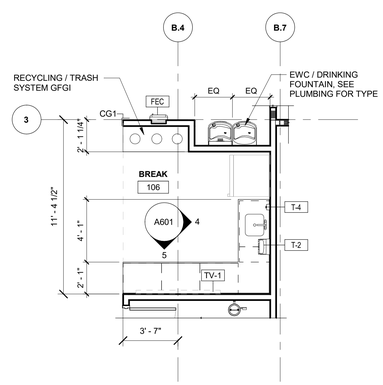

3 A101 **BREAK ROOM - LEVEL 1**
Scale: 1/4" = 1'-0"

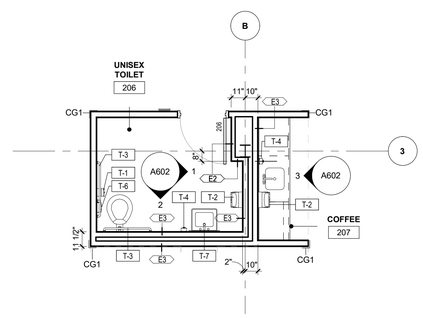

2 A102 **UNISEX TOILET ROOM / COFFEE BAR - LEVEL 2**
Scale: 1/4" = 1'-0"

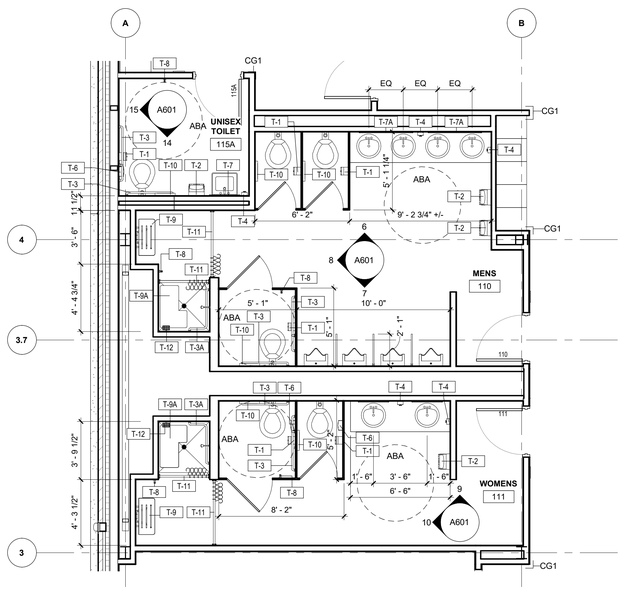

1 A101 **PARTIAL FIRST FLR - TOILETS**
Scale: 1/4" = 1'-0"

ENLARGED FLOOR PLAN NOTES

1. REFER TO THE PROJECT GENERAL NOTES FOR GENERAL PROJECT REQUIREMENTS.
2. THE TYPICAL PARTITION TYPE IS B-3 UNLESS OTHERWISE NOTED.
3. ALL FIRE RATED PARTITION INTERSECTIONS WITH NON-RATED OR LOWER RATED PARTITIONS SHALL CONTINUE THROUGH THE INTERSECTION.
4. CONTRACTOR SHALL VERIFY GOVERNMENT PREFERENCE OF WOOD BLOCKING OR METAL STRAPPING FOR EACH UNIQUE ITEM (EQUIPMENT, FIXTURE, ETC.) THAT WILL BE WALL-MOUNTED. WHERE PERMITTED BY THE GOVERNMENT, ANY WOOD BLOCKING SHALL BE FIRE RETARDANT TREATED. CONTRACTOR SHALL PROVIDE ALL BLOCKING AS REQUIRED TO SUPPORT WALL MOUNTED ACCESSORIES, INCLUDING BUT NOT LIMITED TO DOOR STOPS, CABINETS, AND SHELVING.
5. DIMENSIONS FOR INTERIOR PARTITION AND EXTERIOR WALL LAYOUT ARE TO FINISHED FACE OF WALL, UNLESS OTHERWISE NOTED. DIMENSIONS FOR EXTERIOR WALL LAYOUT IN ENLARGED PLANS ALSO INCLUDE DIMENSIONS FROM GRIDLINE TO INTERIOR FACE OF STRUCTURAL STUD.
6. PROVIDE EXPANSION JOINT ASSEMBLIES WHERE INDICATED (BETWEEN EXTERNAL STAIR PLATFORM AND LOW ROOF).
7. PROVIDE HOUSEKEEPING PADS BENEATH MECHANICAL AND PLUMBING EQUIPMENT IN MECHANICAL ROOMS.
8. DOOR OPENINGS SHALL BE 4" FROM A PERPENDICULAR PARTITION TO OUTSIDE FACE OF FRAME, UNLESS OTHERWISE NOTED. REFER TO THE DOOR SCHEDULE FOR ADDITIONAL INFORMATION.

ACCESSORIES SCHEDULE

MARK	DESCRIPTION	COMMENTS
T-1	SURFACE MOUNTED MULTI-ROLL TOILET TISSUE DISPENSER	CFCI
T-2	HAND TOWEL ROLL DISPENSER	GFCI
T-3	1 1/4" DIAMETER STAINLESS STEEL 18" VERTICAL, 36" AND 42" HORIZONTAL GRAB BAR W/ SNAP FLAGE, SATIN FINISH, SLIP RESISTANT SURFACE	CFCI
T-3A	SHOWER GRAB BAR	CFCI
T-4	SOAP DISPENSER	GFCI
T-5	STAINLESS STEEL MOP AND BROOM HOLDER, 36" W/ FOUR HOLDERS	CFCI
T-6	SURFACE MOUNTED SANITARY NAPKIN DISPOSAL	CFCI
T-7	SURFACE MOUNTED MIRROR	CFCI
T-7A	SURFACE MOUNTED MIRROR	CFCI
T-8	SURFACE-MOUNTED HAT AND COAT HOOK	CFCI
T-9	SHOWER SEAT	CFCI
T-9A	FOLDING SHOWER SEAT	CFCI
T-10	SURFACE MOUNTED TOILET SEAT COVER	CFCI
T-11	SHOWER CURTAIN AND HOOKS	CFCI
T-12	SOAP HOLDER IN SHOWER	CFCI

NOTE: REFER TO SHEET A600 FOR MOUNTING HEIGHTS

ACCESS DOOR SCHEDULE

MARK	DESCRIPTION	COMMENTS
AP1	ACCESS DOOR, FIRE-RATED, UNINSULATED	CFCI

FURNITURE SCHEDULE

MARK	DESCRIPTION	COMMENTS
PR-1	PROJECTOR SCREEN	GFCI
PS-1	PROJECTION SCREEN, CEILING MOUNTED	GFCI
TV-1	LARGE WALL MOUNTED TELEVISION	GFCI
TV-2	SMALL WALL MOUNTED TELEVISION	GFCI
WB-1	WHITEBOARD	GFCI

AECOM

PROJECT

NEW SECURITY FORCES BUILDING

PAYNE BLVD.
CHARLOTTE, NORTH CAROLINA 28208

CLIENT

NORTH CAROLINA AIR NATIONAL GUARD - 145TH AIRLIFT WING

145th AIRLIFT WING
4930 MINUTEMAN WAY
CHARLOTTE, NORTH CAROLINA 28208

ARCHITECT/DESIGNER

AECOM

277 W NATIONWIDE BLVD
COLUMBUS, OH 43215
614-464-4500

http://www.aecom.com

CONSULTANTS

REGISTRATION

STATE OF OHIO
MARTY SIEBE
1817301
REGISTERED ARCHITECT
5/30/2025

KEY PLAN

ISSUE/REVISION

I/R	DATE	DESCRIPTION
	5/30/2025	B-3 SUBMITTAL - FINAL

PROJECT NUMBER

60637899
FJRP229030

SHEET TITLE

ENLARGED FLOOR PLANS

SHEET NUMBER

A400

This drawing has been prepared for the use of AECOM's client and may not be used, reproduced or relied upon by third parties, except as agreed by AECOM and its client, as required by law or for use by governmental reviewing agencies. AECOM accepts no responsibility, and denies any liability whatsoever, to any party that modifies this drawing without AECOM's express written consent. Do not scale this document. All measurements must be obtained from the stated dimensions.

©2023 AECOM Corporation

Project Management Initials: MR Designer: Designer Checker: Checker Approved: Approver ARCH E1 30"x42"
Last Plotted: 5/23/2025 12:12:38 PM
Filename: BM-300-ISP-AABEX (GSA) 60637899-SFNCANG145th60637899_SF-NC ANG_R21_A.rvt
Printed on ___% Post-Consumer Recycled Content Paper

Project Management Initials: MR Designer: Designer Checkest: Checker Approved: ApproverARCH E1 30"x42"

GENERAL NOTES - REFLECTED CEILING

1. THE TYPICAL CEILING HEIGHT SHALL BE 10' – 0" UNLESS OTHERWISE NOTED.
2. ALL DIMENSIONS ARE TO FACE OF FINISH UNLESS OTHERWISE NOTED.
3. TYPICAL ACOUSTIC CEILING TILE SYSTEM SHALL BE ACT-1 UNLESS OTHERWISE NOTED.
4. ALL CEILING HEIGHTS ARE ABOVE FINISHED FLOOR, UNLESS OTHERWISE NOTED.
5. THE RELECTED CEILING PLANS SHALL BE USED FOR LAYOUT OF ALL CEILING DEVICES. CONSULT ARCHITECT IF A CONFLICT ARISES WITH STRUCTURAL OR MEP DRAWINGS.
6. CENTER CEILING TILES IN ROOM AS SHOWN TO PROVIDE EQUAL TILES AT EACH END WALL IN EACH DIRECTION UNLESS OTHERWISE NOTED OR DIMENSIONED.
7. CENTER RECESSED LIGHT FIXTURES, ELECTRICAL AND MECHANICAL DEVICES, AND SPRINKLER HEADS WITHIN A CEILING TILE UNLESS OTHERWISE NOTED. COORDINATE LAYOUT WITH ALL OTHER CEILING MOUNTED DEVICES.
8. GYPSUM BOARD SOFFITS ARE SHOWN TO INTENDED SIZES. PAINT ALL GYPSUM BOARD SOFFITS AND HEADERS THE TYPICAL GYPSUM CEILING PAINT COLOR UNLESS OTHERWISE NOTED.
9. AT TOILETS, SHOWERS, AND JANITOR CLOSETS, PROVIDE MOISTURE RESISTANT GYPSUM BOARD AT CEILINGS SOFFITS AND MOLD RESISTANT ACT WHERE INDICATED ON DRAWINGS.
10. COORDINATE EXACT LOCATIONS OF ACCESS PANELS IN THE FIELD, AND WITH CEILING MOUNTED EQUIPMENT VENDORS OR FOR UTILITY CONTROLS ACCESS, WHERE APPLICABLE. ACCESS PANEL PAINT FINISH SHALL MATCH ADJACENT CEILING COLOR.
11. NOT ALL CEILING MOUNTED DEVICES ARE SHOWN ON THE ARCHITECTURAL REFLECTED CEILING PLANS. REFER TO PLUMBING, MECHANICAL, AND ELECTRICAL DRAWINGS FOR LOCATIONS OF SPRINKLER HEADS, EXIT SIGNS, AND ADDITIONAL CEILING MOUNTED DEVICES.
12. NOT ALL SPRINKLER HEADS ARE SHOWN, HOWEVER, ALL AREAS SHALL BE SPRINKLERED AS SPECIFIED. HEADS ARE SHOWN IN SELECTED SPACES TO CONTROL THE LOCATIONS FOR AESTHETIC PURPOSES ONLY. WHEN ADDITIONAL HEADS ARE REQUIRED, COORDINATE LOCATIONS WITH ARCHITECT.

GENERAL NOTES - REFLECTED CEILING LEDGEND

- RECESSED 2x2 LIGHT FIXTURE
- RECESSED LINEAR LIGHT FIXTURE
- RECESSED DOWN LIGHT FIXTURE
- OS — OCCUPANCY SENSOR
- EXIT LIGHT / SIGN
- SUPPLY AIR GRILLE
- RETURN AIR GRILLE
- LINEAR DIFFUSER
- PENDANT FIXTURE
- 2x2 ACOUSTICAL CEILING PANEL, ACT-1
- 2x2 ACOUSTICAL CEILING PANEL, ACCENT ACT-2
- SUSPENDED GYPSUM WALL BOARD CEILING, PT4 (UNO)
- EXPOSED TO STRUCTURE

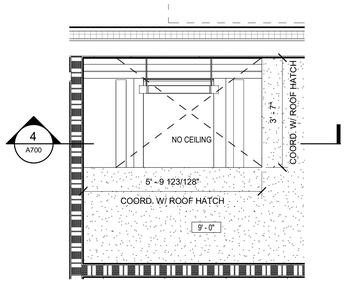

2 ENLARGED CEILING PLAN - LEVEL 2 - ROOF HATCH
A151 Scale: 1/2" = 1'-0"

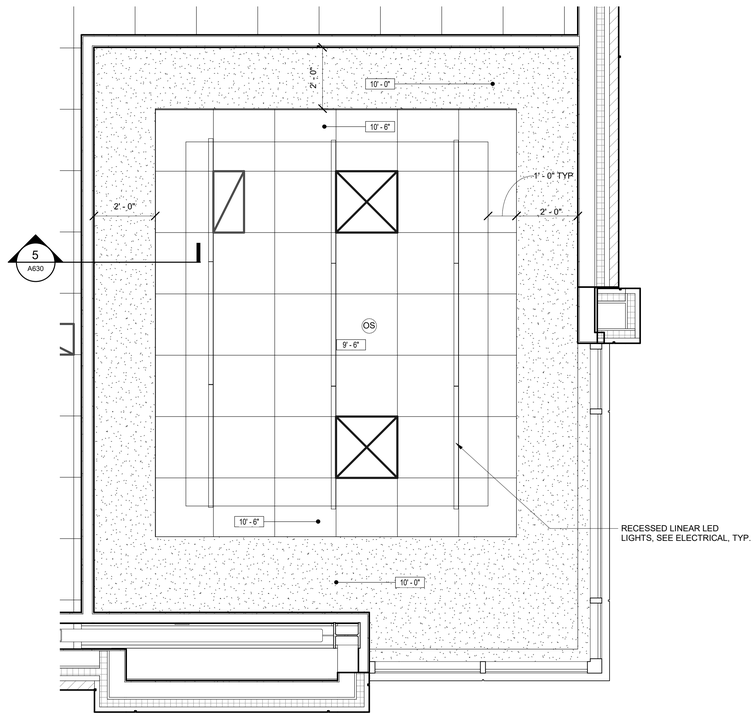

1 ENLARGED CEILING PLAN - LEVEL 2 - CONFERENCE
A151 Scale: 1/2" = 1'-0"

AECOM

PROJECT

NEW SECURITY FORCES BUILDING

PAYNE BLVD.
CHARLOTTE, NORTH CAROLINA 28208

CLIENT

NORTH CAROLINA AIR NATIONAL GUARD - 145TH AIRLIFT WING

145th AIRLIFT WING
4930 MINUTEMAN WAY
CHARLOTTE, NORTH CAROLINA 28208

ARCHITECT/DESIGNER

AECOM

277 W NATIONWIDE BLVD
COLUMBUS, OH 43215
614-464-4500

http://www.aecom.com

CONSULTANTS

REGISTRATION

STATE OF OHIO
MARTY SEESE
1817301
REGISTERED ARCHITECT
5/30/2025

KEY PLAN

2 1 0 2 4
SCALE: 1/2"=1'-0"

ISSUE/REVISION

I/R	DATE	DESCRIPTION
	5/30/2025	B-3 SUBMITTAL - FINAL

PROJECT NUMBER

60637899
FJRP229030

SHEET TITLE

ENLARGED REFLECTED CEILING PLANS

SHEET NUMBER

A420

This drawing has been prepared for the use of AECOM's client and may not be used, reproduced or relied upon by third parties, except as agreed by AECOM and its client, as required by law or for use by governmental reviewing agencies. AECOM accepts no responsibility, and denies any liability whatsoever, to any party that modifies this drawing without AECOM's express written consent. Do not scale this document. All measurements must be obtained from the stated dimensions.

Last Plotted: 5/23/2025 12:12:36 PM
Filename: BM-300-ISP-ARCH (USA) 60637899-SFNCANG145thWing_SF-NC-ANG_R21_A.rvt

Printed on ___ % Post-Consumer Recycled Content Paper

©2023 AECOM Corporation

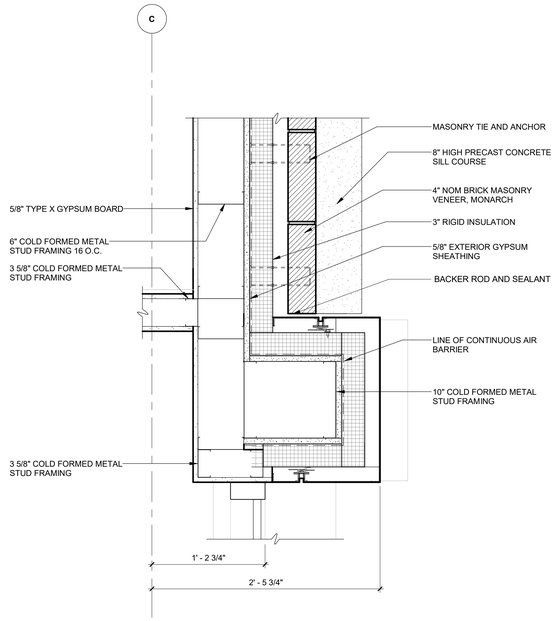

4 A400 — **PLAN DETAIL**
Scale: 1 1/2" = 1'-0"

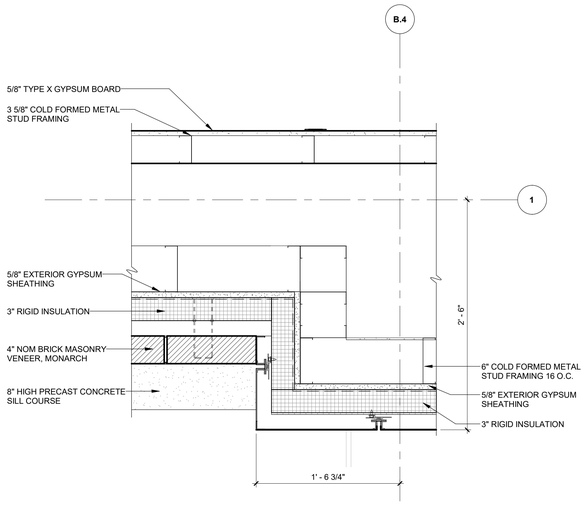

3 A400 — **PLAN DETAIL**
Scale: 1 1/2" = 1'-0"

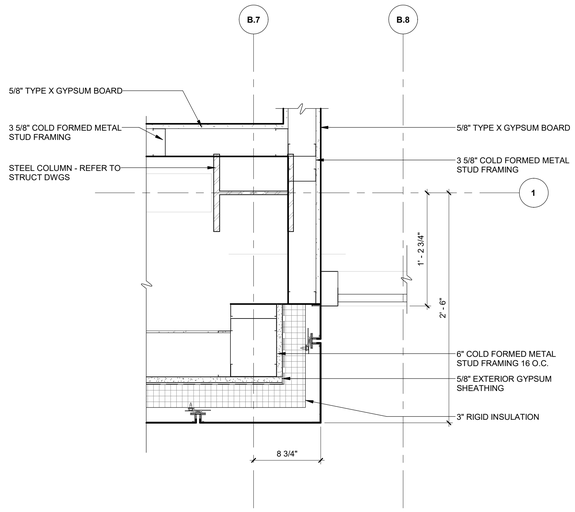

2 A400 — **PLAN DETAIL**
Scale: 1 1/2" = 1'-0"

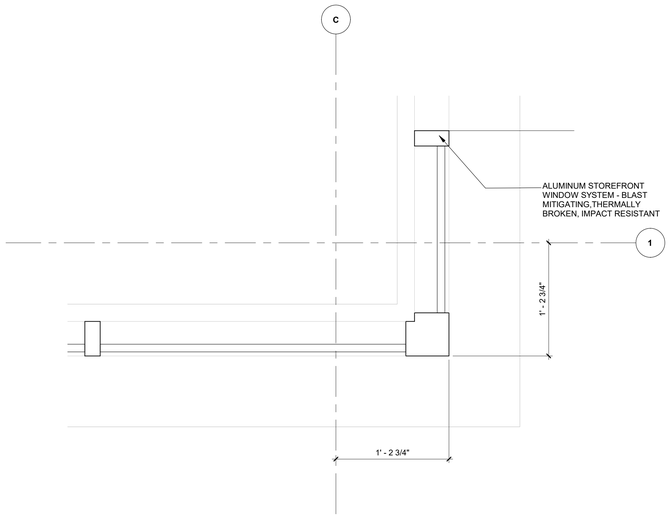

1 A400 — **PLAN DETAIL**
Scale: 1 1/2" = 1'-0"

AECOM

PROJECT

NEW SECURITY FORCES BUILDING

PAYNE BLVD.
CHARLOTTE, NORTH CAROLINA 28208

CLIENT

NORTH CAROLINA AIR NATIONAL GUARD - 145TH AIRLIFT WING

145th AIRLIFT WING
4930 MINUTEMAN WAY
CHARLOTTE, NORTH CAROLINA 28208

ARCHITECT/DESIGNER

AECOM

277 W NATIONWIDE BLVD
COLUMBUS, OH 43215
614-464-4500

http://www.aecom.com

CONSULTANTS

REGISTRATION

STATE OF OHIO
MARTY SEESE
1817301
REGISTERED ARCHITECT
5/30/2025

KEY PLAN

1 0 1
SCALE: 1 1/2"=1'-0"

ISSUE/REVISION

I/R	DATE	DESCRIPTION
	5/30/2025	B-3 SUBMITTAL - FINAL

PROJECT NUMBER

60637899
FJRP229030

SHEET TITLE

EXTERIOR PLAN DETAILS

SHEET NUMBER

A500

The drawing has been prepared for the use of AECOM's client and may not be used, reproduced or relied upon by third parties, except as agreed by AECOM and its client, as required by law or for use by governmental reviewing agencies. AECOM accepts no responsibility, and denies any liability whatsoever to any party that modifies this drawing without AECOM's express written consent. Do not scale this document. All measurements must be obtained from the stated dimensions.

©2023 AECOM Corporation

Project Management Initials: MR Designer: Designer Checker: Checker Approved: Approver/ARCH E1 30"x42"
Last Plotted: 5/23/2025 12:13:00 PM
Filename: BM 300-ISP-AMER (USA) 60637899-SFNCANG145th0637899_SF-NC ANG_R21_A.rvt
Printed on ___% Post-Consumer Recycled Content Paper

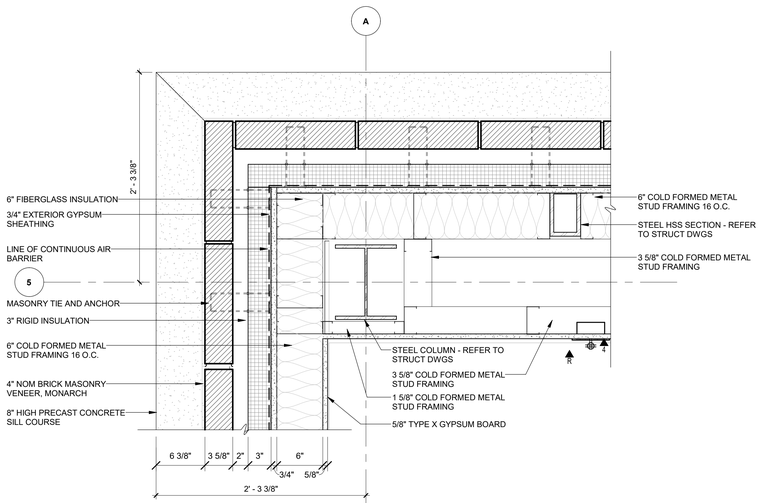

7 A101 **PLAN DETAIL**
Scale: 1 1/2" = 1'-0"

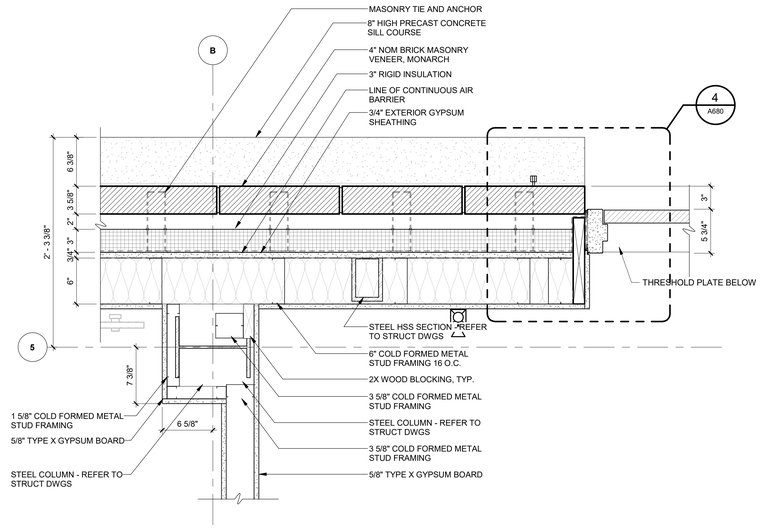

6 A101 **PLAN DETAIL**
Scale: 1 1/2" = 1'-0"

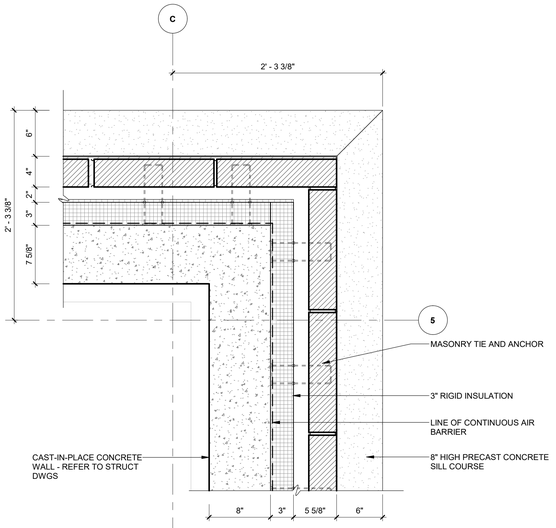

5 A101 **PLAN DETAIL**
Scale: 1 1/2" = 1'-0"

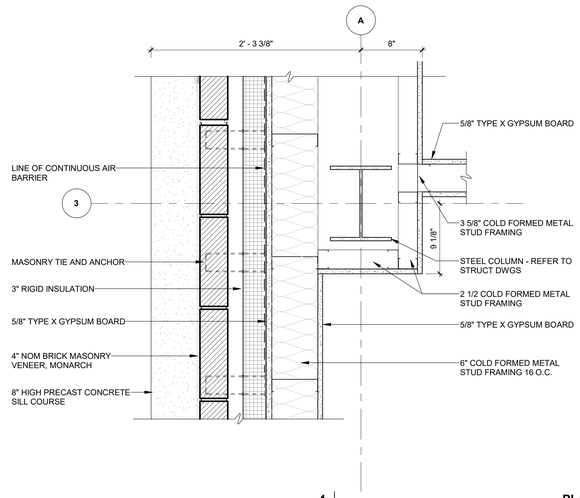

4 A101 **PLAN DETAIL**
Scale: 1 1/2" = 1'-0"

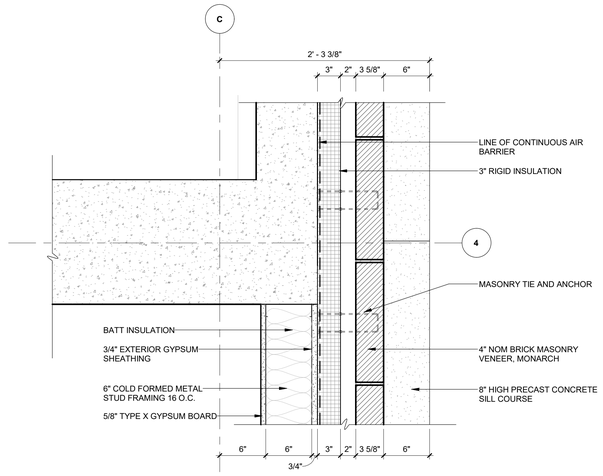

3 A700 **PLAN DETAIL**
Scale: 1 1/2" = 1'-0"

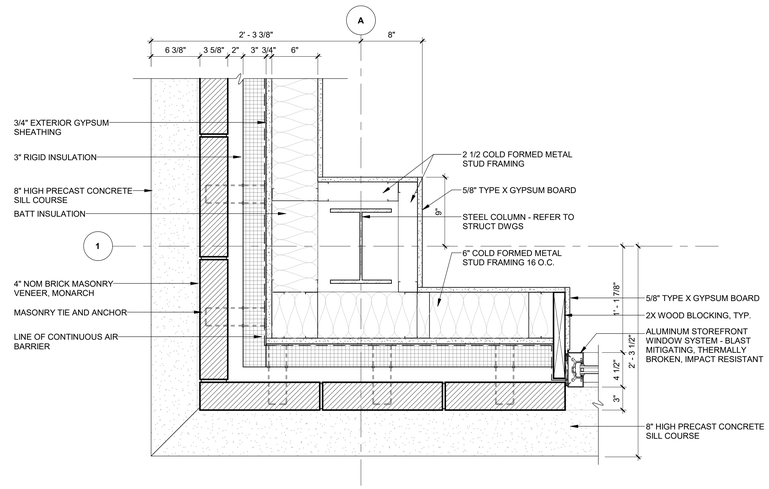

2 A101 **PLAN DETAIL**
Scale: 1 1/2" = 1'-0"

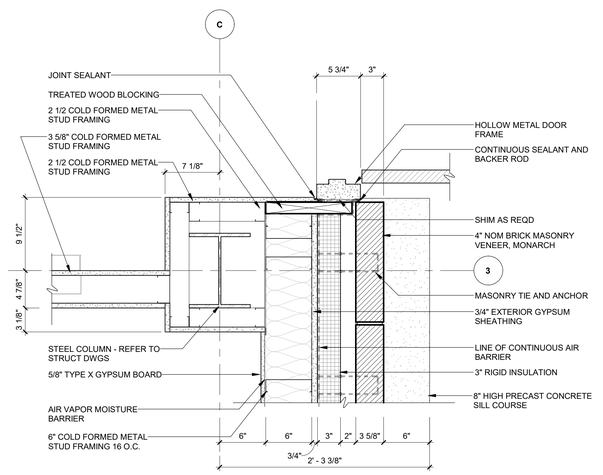

1 A700 **PLAN DETAIL**
Scale: 1 1/2" = 1'-0"

AECOM

PROJECT
NEW SECURITY FORCES BUILDING
PAYNE BLVD.
CHARLOTTE, NORTH CAROLINA 28208

CLIENT
NORTH CAROLINA AIR NATIONAL GUARD - 145TH AIRLIFT WING
145th AIRLIFT WING
4930 MINUTEMAN WAY
CHARLOTTE, NORTH CAROLINA 28208

ARCHITECT/DESIGNER
AECOM
277 W NATIONWIDE BLVD
COLUMBUS, OH 43215
614-464-4500

http://www.aecom.com

CONSULTANTS

REGISTRATION

STATE OF OHIO
MARTY SEESE
1817301
REGISTERED ARCHITECT
5/30/2025

KEY PLAN

1 0 1
SCALE: 1 1/2"=1'-0"

ISSUE/REVISION

I/R	DATE	DESCRIPTION
	5/30/2025	B-3 SUBMITTAL - FINAL

PROJECT NUMBER
60637899
FJRP229030

SHEET TITLE
EXTERIOR PLAN DETAILS

SHEET NUMBER
A501

This drawing has been prepared for the use of AECOM's client and may not be used, reproduced or relied upon by third parties, except as agreed by AECOM and its client, as required by law or for use by governmental reviewing agencies. AECOM accepts no responsibility, and denies any liability whatsoever, to any party that modifies this drawing without AECOM's express written consent. Do not scale this document. All measurements must be obtained from the stated dimensions.

©2023 AECOM Corporation

Project Management Initials: MR Designer: Designer Checker: Checker Approved: Approver/ARCH E1 30"x42"
Last Plotted: 5/23/2025 12:13:02 PM
Filename: Bldl 560 ISP-AAEER (GSA) 60637899-SFNCANG145t60637899_SF-NC ANG_R21_A.rvt
Printed on ___ % Post-Consumer Recycled Content Paper

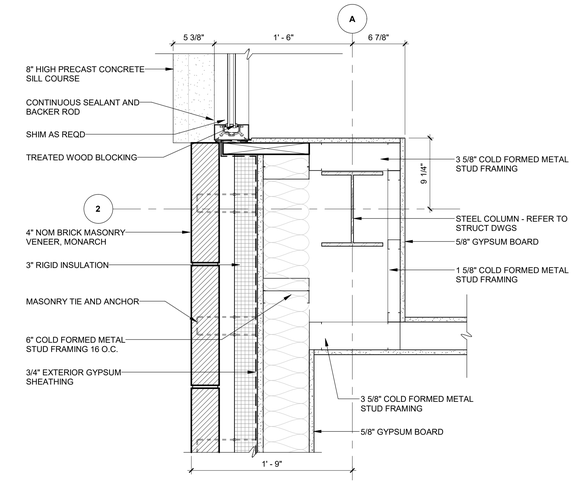

7 A102 **PLAN DETAIL**
Scale: 1 1/2" = 1'-0"

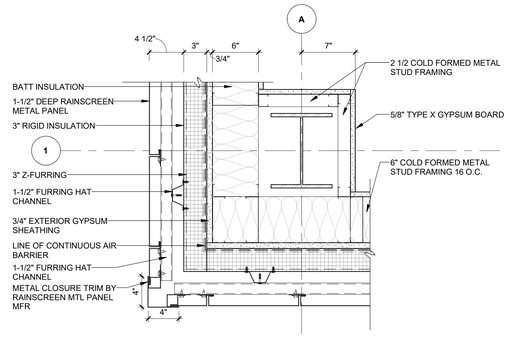

8 A102 **PLAN DETAIL**
Scale: 1 1/2" = 1'-0"

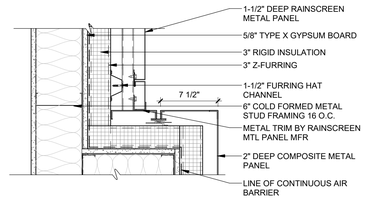

9 A102 **PLAN DETAIL**
Scale: 1 1/2" = 1'-0"

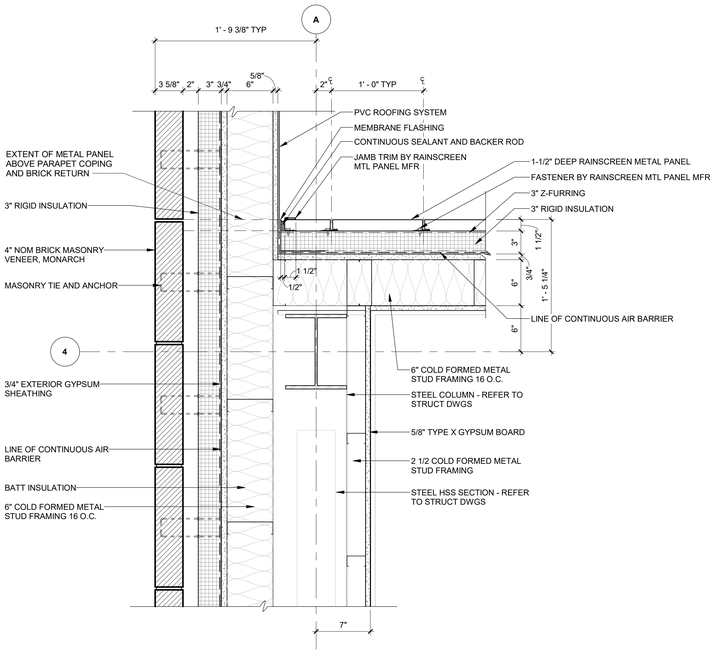

6 A102 **PLAN DETAIL**
Scale: 1 1/2" = 1'-0"

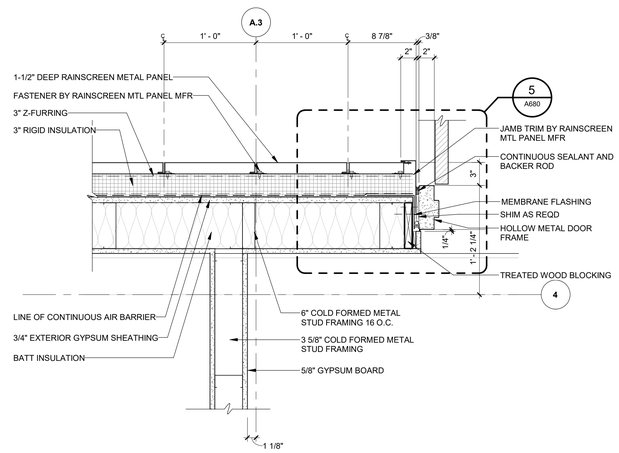

5 A102 **PLAN DETAIL**
Scale: 1 1/2" = 1'-0"

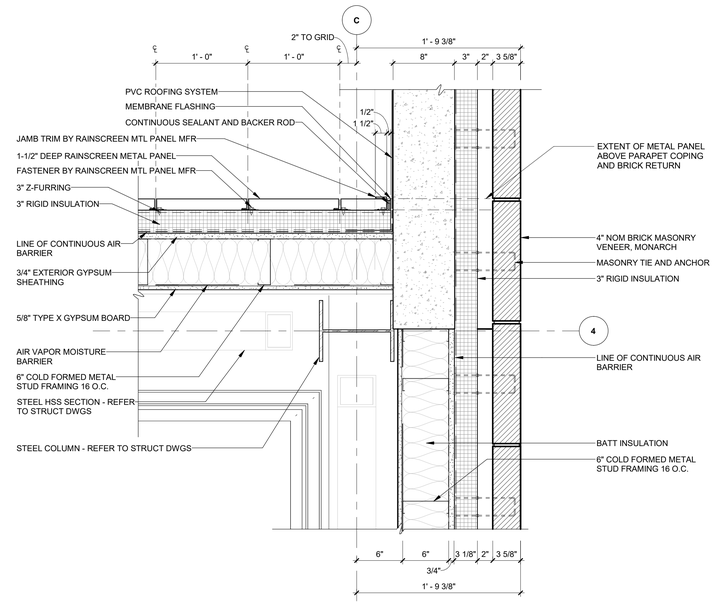

4 A700 **PLAN DETAIL**
Scale: 1 1/2" = 1'-0"

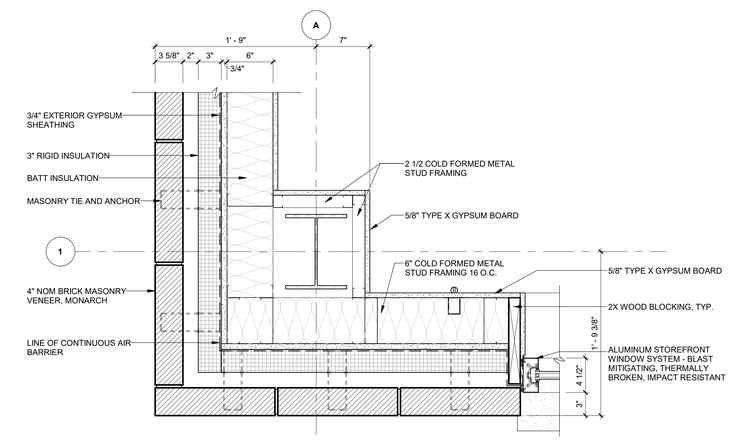

3 A102 **PLAN DETAIL**
Scale: 1 1/2" = 1'-0"

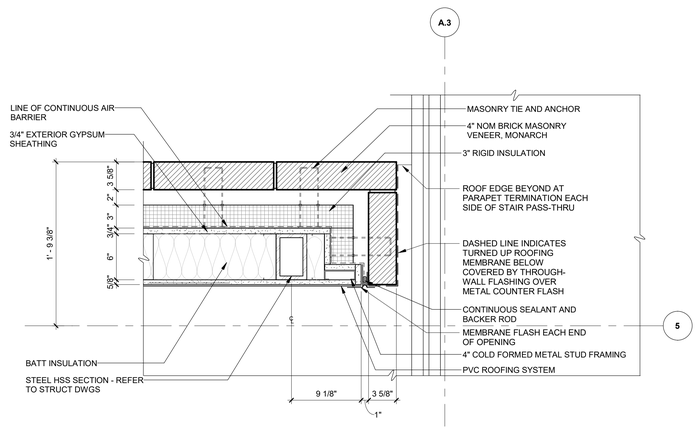

2 A102 **PLAN DETAIL**
Scale: 1 1/2" = 1'-0"

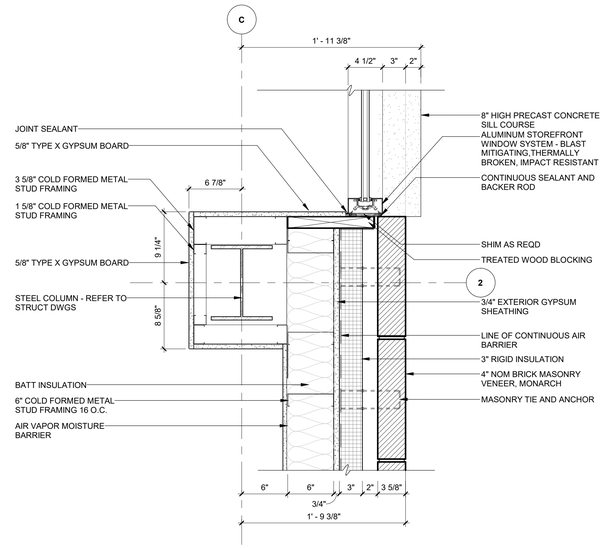

1 A102 **PLAN DETAIL**
Scale: 1 1/2" = 1'-0"

Project Management Initials: MR Designer: Designer Checker: Checker Approved: Approver/ARCH E1 30"x42"

Last Plotted: 5/23/2025 12:13:04 PM
Filename: BM 300-ISP-AMER (USA) 60637899-SFNCANG145903739B_SF-NC ANG_R21_A-r4

Printed on ___% Post-Consumer Recycled Content Paper

The drawing has been prepared for the use of AECOM's client and may not be used, reproduced or relied upon by third parties, except as agreed by AECOM and its client, as required by law or for use by governmental reviewing agencies. AECOM accepts no responsibility, and denies any liability whatsoever to any party that modifies this drawing without AECOM's express written consent. Do not scale this document. All measurements must be obtained from the stated dimensions.

AECOM

PROJECT
NEW SECURITY FORCES BUILDING
PAYNE BLVD.
CHARLOTTE, NORTH CAROLINA 28208

CLIENT
NORTH CAROLINA AIR NATIONAL GUARD - 145TH AIRLIFT WING
145th AIRLIFT WING
4930 MINUTEMAN WAY
CHARLOTTE, NORTH CAROLINA 28208

ARCHITECT/DESIGNER
AECOM
277 W NATIONWIDE BLVD
COLUMBUS, OH 43215
614-464-4500

http://www.aecom.com

CONSULTANTS

REGISTRATION

KEY PLAN

1 0 1
SCALE: 1 1/2"=1'-0"

ISSUE/REVISION

I/R	DATE	DESCRIPTION
	5/30/2025	B-3 SUBMITTAL - FINAL

PROJECT NUMBER
60637899
FJRP229030

SHEET TITLE
EXTERIOR PLAN DETAILS

SHEET NUMBER
A502

©2023 AECOM Corporation

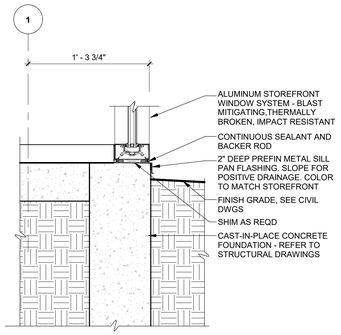

12 A321 **SECTION DETAIL**
Scale: 1 1/2" = 1'-0"

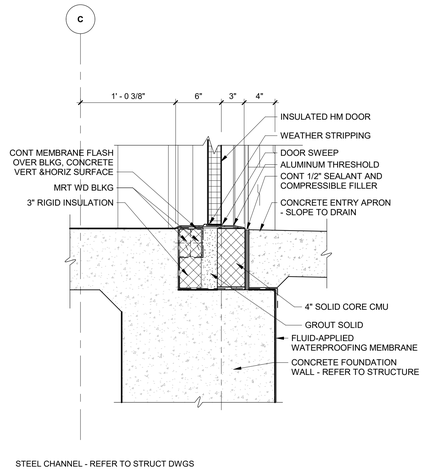

11 A320 **SECTION DETAIL**
Scale: 1 1/2" = 1'-0"

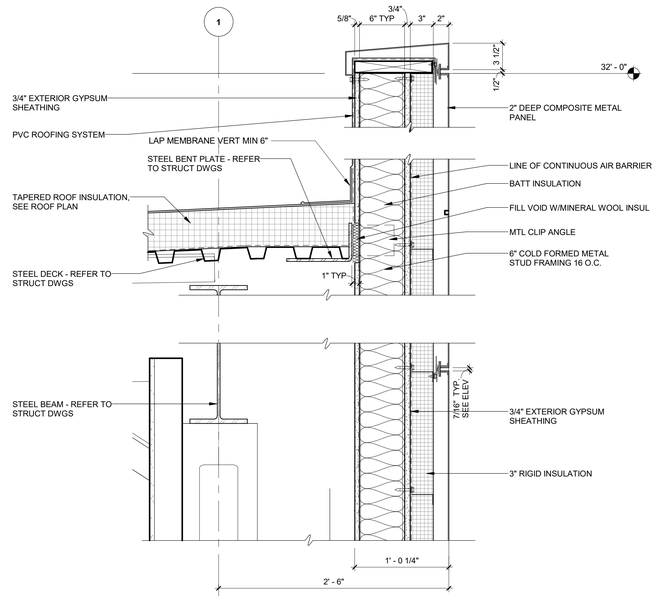

10 A321 **SECTION DETAIL**
Scale: 1 1/2" = 1'-0"

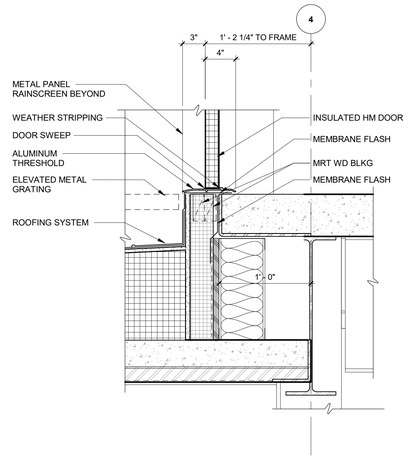

9 A321 **SECTION DETIAL**
Scale: 1 1/2" = 1'-0"

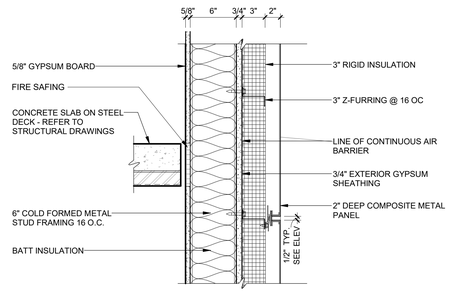

8 A321 **SECTION DETAIL**
Scale: 1 1/2" = 1'-0"

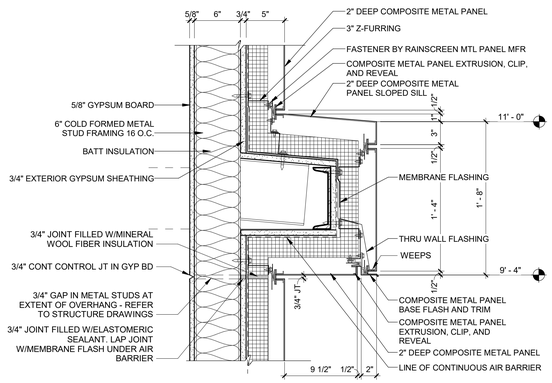

7 A321 **SECTION DETAIL**
Scale: 1 1/2" = 1'-0"

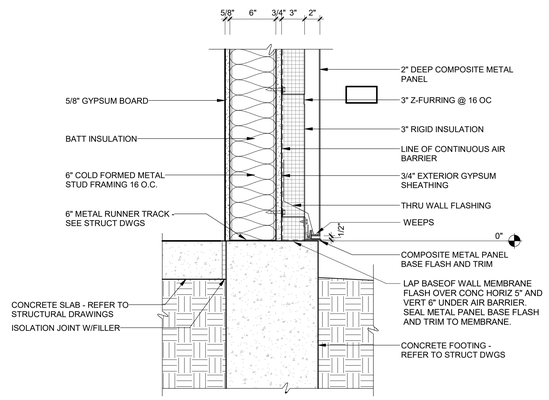

6 A321 **SECTION DETAIL**
Scale: 1 1/2" = 1'-0"

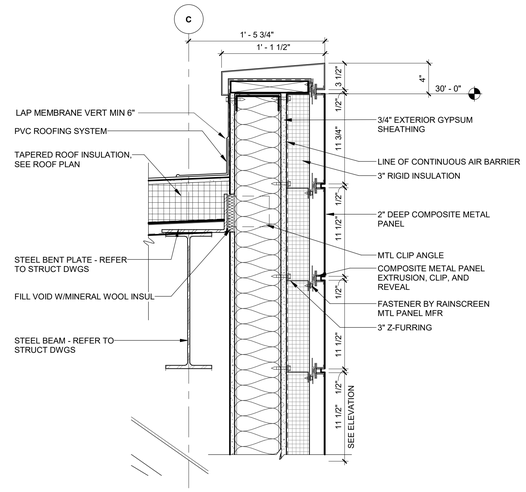

5 A320 **SECTION DETAIL**
Scale: 1 1/2" = 1'-0"

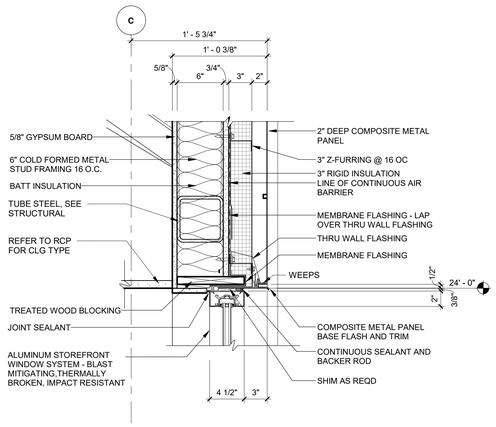

4 A320 **SECTION DETAIL**
Scale: 1 1/2" = 1'-0"

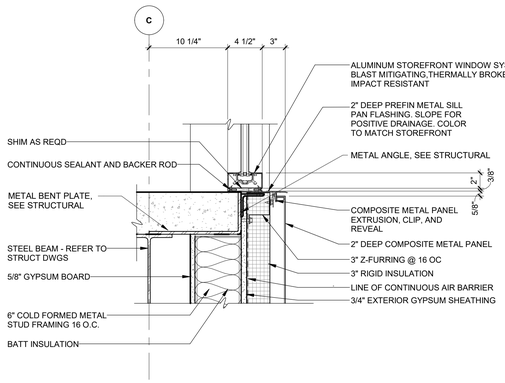

3 A320 **SECTION DETAIL**
Scale: 1 1/2" = 1'-0"

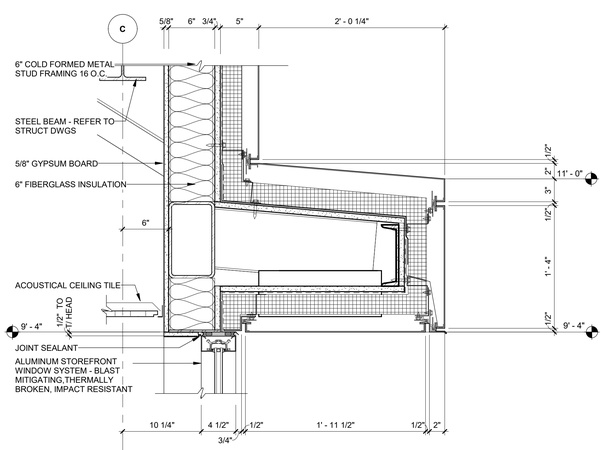

2 A320 **SECTION DETAIL**
Scale: 1 1/2" = 1'-0"

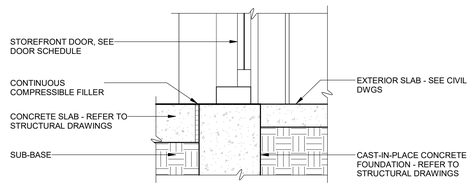

1 A320 **SECTION DETAIL**
Scale: 1 1/2" = 1'-0"

Last Plotted: 5/23/2025 12:13:08 PM
Filename: BM-300-ISP-AMER-USA(1.69637899-SFNCANG)14590637899_SF-NC ANG_R21_A.rvt

Printed on ____% Post-Consumer Recycled Content Paper

Project Management Initials: MR Designer: Designer Checked: Checker Approved: ApproverARCH E1 30"x42"

The drawing has been prepared for the use of AECOM's client and may not be used, reproduced or relied upon by third parties, except as agreed by AECOM and its client, as required by law or for use by governmental reviewing agencies. AECOM accepts no responsibility, and denies any liability whatsoever to any party that modifies this drawing without AECOM's express written consent. Do not scale this document. All measurements must be obtained from the stated dimensions.

AECOM

PROJECT
NEW SECURITY FORCES BUILDING
PAYNE BLVD.
CHARLOTTE, NORTH CAROLINA 28208

CLIENT
NORTH CAROLINA AIR NATIONAL GUARD - 145TH AIRLIFT WING
145th AIRLIFT WING
4930 MINUTEMAN WAY
CHARLOTTE, NORTH CAROLINA 28208

ARCHITECT/DESIGNER
AECOM
277 W NATIONWIDE BLVD
COLUMBUS, OH 43215
614-464-4500

http://www.aecom.com

CONSULTANTS

REGISTRATION

STATE OF OHIO
MARTY SEESE
1817301
REGISTERED ARCHITECT
5/30/2025

KEY PLAN

1 0 1
SCALE: 1 1/2"=1'-0"

ISSUE/REVISION

I/R	DATE	DESCRIPTION
	5/30/2025	B-3 SUBMITTAL - FINAL

PROJECT NUMBER
60637899
FJRP229030

SHEET TITLE
EXTERIOR SECTION DETAILS

SHEET NUMBER
A520

©2023 AECOM Corporation

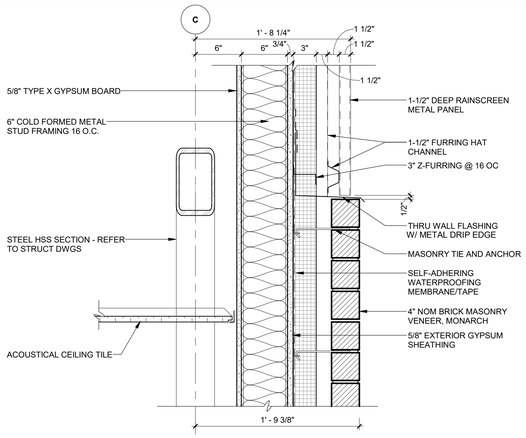

11 SECTION DETAIL
A320 Scale: 1 1/2" = 1'-0"

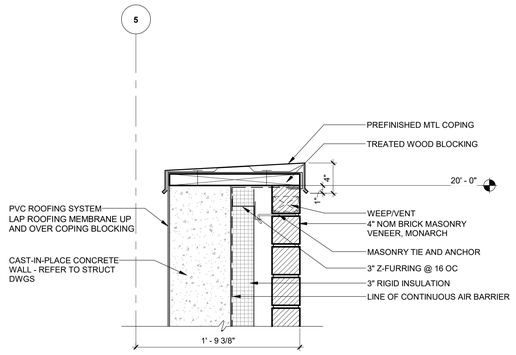

10 SECTION DETAIL
A320 Scale: 1 1/2" = 1'-0"

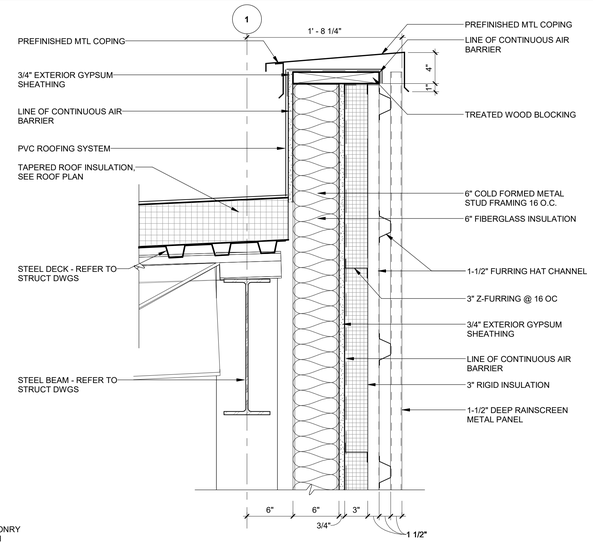

9 SECTION DETAIL
A320 Scale: 1 1/2" = 1'-0"

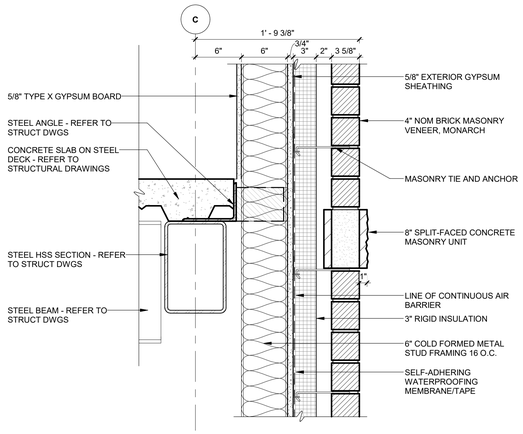

8 SECTION DETAIL
A320 Scale: 1 1/2" = 1'-0"

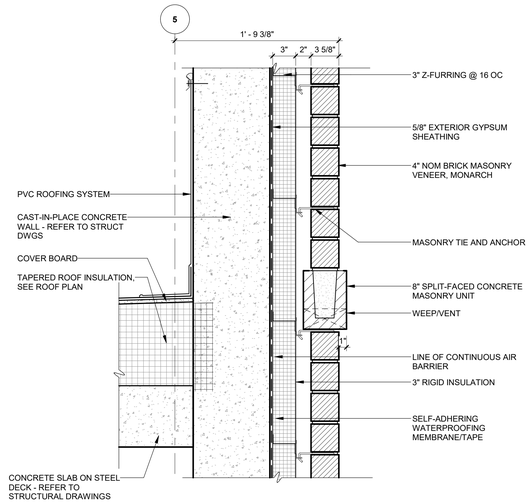

7 SECTION DETAIL
A320 Scale: 1 1/2" = 1'-0"

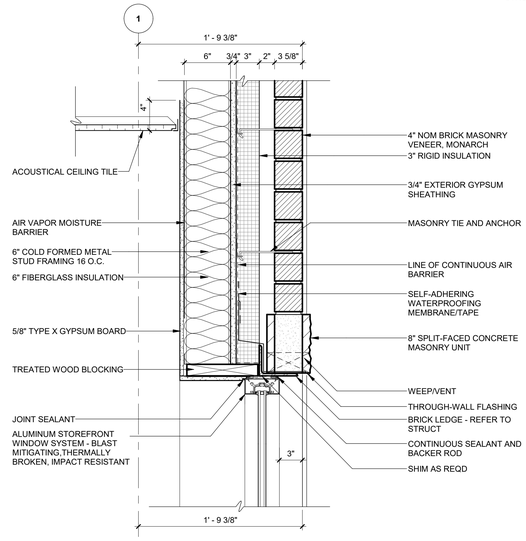

6 SECTION DETAIL
A320 Scale: 1 1/2" = 1'-0"

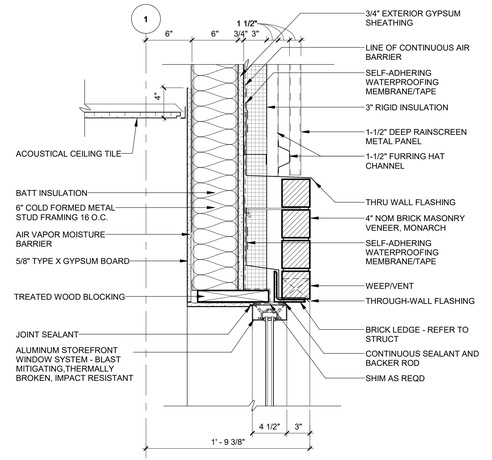

5 SECTION DETAIL
A320 Scale: 1 1/2" = 1'-0"

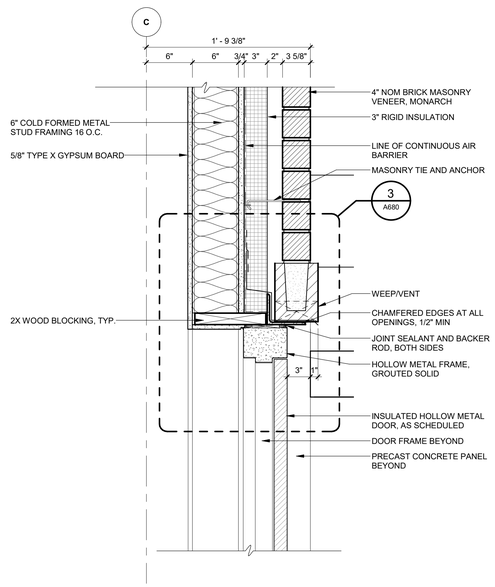

4 SECTION DETAIL
A320 Scale: 1 1/2" = 1'-0"

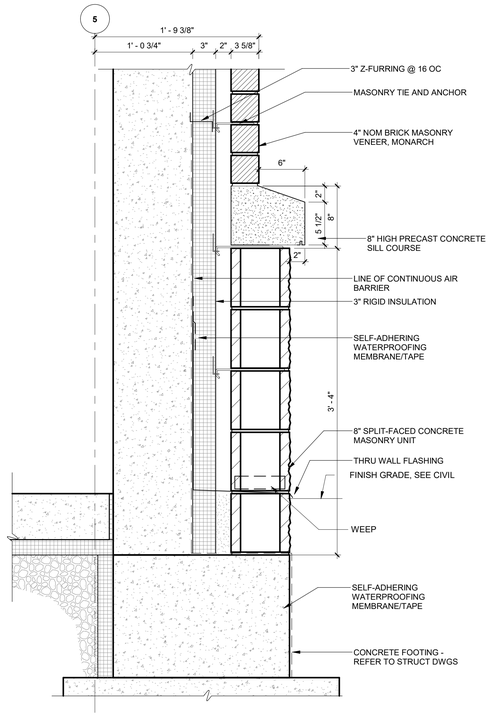

3 SECTION DETAIL
A320 Scale: 1 1/2" = 1'-0"

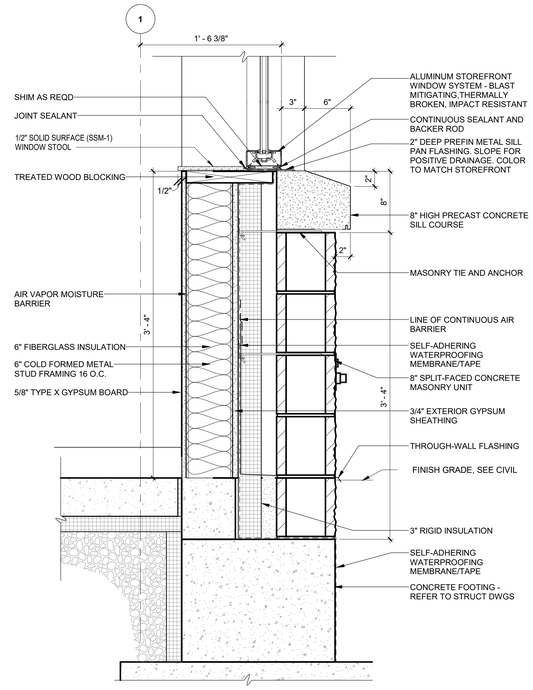

2 SECTION DETAIL
A320 Scale: 1 1/2" = 1'-0"

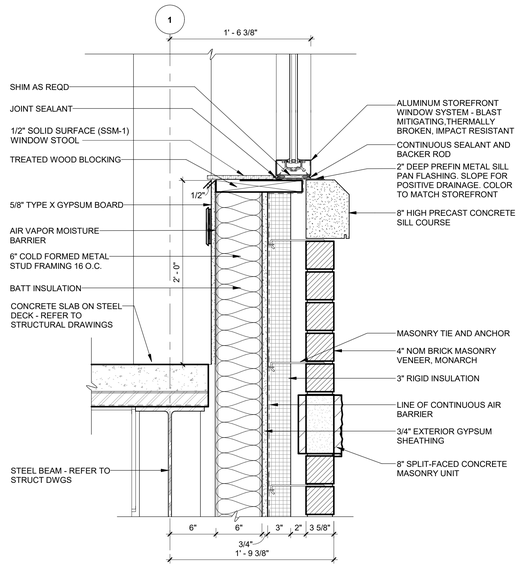

1 SECTION DETAIL
A320 Scale: 1 1/2" = 1'-0"

The drawing has been prepared for the use of AECOM's client and may not be used, reproduced or relied upon by third parties, except as agreed by AECOM and its client, as required by law or for use by governmental reviewing agencies. AECOM accepts no responsibility, and denies any liability whatsoever to any party that modifies this drawing without AECOM's express written consent. Do not scale this document. All measurements must be obtained from the stated dimensions.

AECOM

PROJECT
NEW SECURITY FORCES BUILDING
PAYNE BLVD.
CHARLOTTE, NORTH CAROLINA 28208

CLIENT
NORTH CAROLINA AIR NATIONAL GUARD - 145TH AIRLIFT WING
145th AIRLIFT WING
4930 MINUTEMAN WAY
CHARLOTTE, NORTH CAROLINA 28208

ARCHITECT/DESIGNER
AECOM
277 W NATIONWIDE BLVD
COLUMBUS, OH 43215
614-464-4500

http://www.aecom.com

CONSULTANTS

REGISTRATION

STATE OF OHIO
MARTY SIEBE
1817301
REGISTERED ARCHITECT
5/30/2025

KEY PLAN

1 0 1
SCALE: 1 1/2"=1'-0"

ISSUE/REVISION

I/R	DATE	DESCRIPTION
	5/30/2025	B-3 SUBMITTAL - FINAL

PROJECT NUMBER
60637899
FJRP229030

SHEET TITLE
EXTERIOR SECTION DETAILS

SHEET NUMBER
A521

©2023 AECOM Corporation

Project Management Initials: MR Designer: Designer Checker: Checker Approved: Approver/ARCH E1 30"x42"

Last Plotted: 5/23/2025 12:13:11 PM
Filename: BM 300-ISP-AMER (USA) 60637899-SFNCANG145th03739B_SF-NC ANG_R21_A-r4

Printed on ___% Post-Consumer Recycled Content Paper

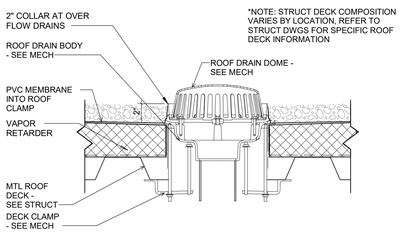

6 A103 **ROOF - TYP. DRAIN SECTION DETAIL**
NTS

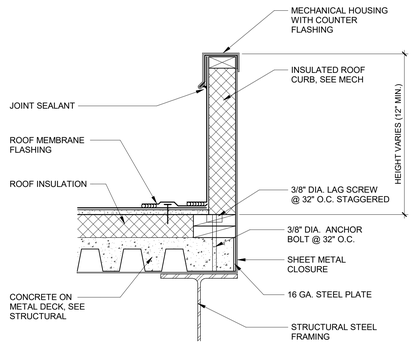

5 A103 **ROOF - TYP MECH EQUIP CURB DETAIL AT CONCRETE & METAL ROOF BY MANUF**
NTS

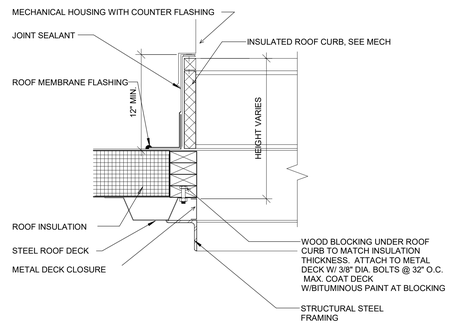

4 A103 **ROOF - TYP MECH EQUIP CURB BY MANUF**
NTS

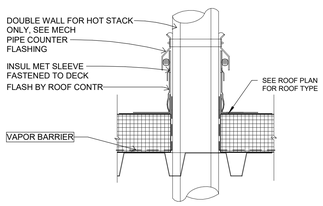

3 **ROOF - TYP. PIPE FLASHING**
NTS

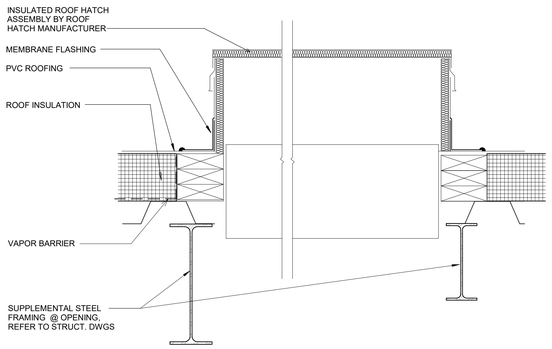

2 A103 **ROOF HATCH SECTION DETAIL**
NTS

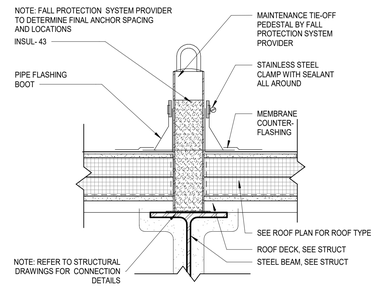

1 **ROOF - TYP. TIE OFF**
NTS

AECOM

PROJECT
NEW SECURITY FORCES BUILDING
PAYNE BLVD.
CHARLOTTE, NORTH CAROLINA 28208

CLIENT
NORTH CAROLINA AIR NATIONAL GUARD - 145TH AIRLIFT WING
145th AIRLIFT WING
4930 MINUTEMAN WAY
CHARLOTTE, NORTH CAROLINA 28208

ARCHITECT/DESIGNER
AECOM
277 W NATIONWIDE BLVD
COLUMBUS, OH 43215
614-464-4500

http://www.aecom.com

CONSULTANTS

REGISTRATION

STATE OF OHIO
MARTY SIEBE
1817301
REGISTERED ARCHITECT
5/30/2025

KEY PLAN

1 0 1
SCALE: 1 1/2"=1'-0"

ISSUE/REVISION

I/R	DATE	DESCRIPTION
	5/30/2025	B-3 SUBMITTAL - FINAL

PROJECT NUMBER
60637899
FJRP229030

SHEET TITLE
ROOF DETAILS

SHEET NUMBER
A530

This drawing has been prepared for the use of AECOM's client and may not be used, reproduced or relied upon by third parties, except as agreed by AECOM and its client, as required by law or for use by governmental reviewing agencies. AECOM accepts no responsibility, and denies any liability whatsoever, to any party that modifies this drawing without AECOM's express written consent. Do not scale this document. All measurements must be obtained from the stated dimensions.

©2023 AECOM Corporation

Project Management Initials: MR Designer: Designer Checker: Checker Approved: Approver/ARCH E1 30"x42"
Last Plotted: 5/23/2025 12:13:12 PM
Filename: BIM 360:/BP-AMER-(USA)/60637899-SFNC-NG/145#06637899_SF-NC AND_R21_A.rvt
Printed on ___% Post-Consumer Recycled Content Paper

Project Management Initials: MR Designer: Designer Checked: Checker Approved: Approver/ARCH E1 30"x42"

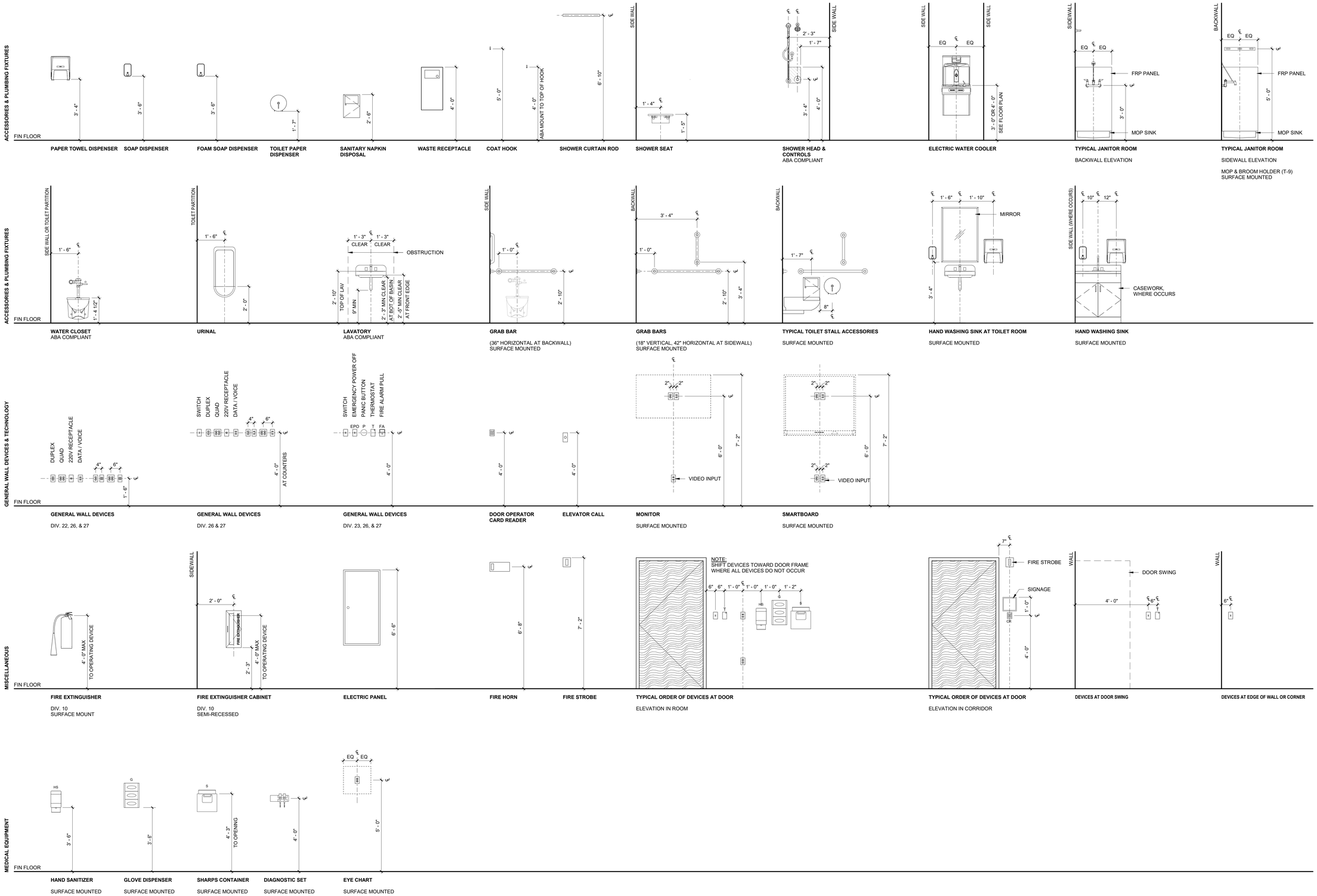

Last Plotted: 5/23/2025 12:13:12 PM
Filename: BM_MR-SP-ABER (USA) (60637899-SFNCANG145th63789_SF-NC ANG_R21_A.rvt

Printed on ___% Post-Consumer Recycled Content Paper

The drawing has been prepared for the use of AECOM's client and may not be used, reproduced or relied upon by third parties, except as agreed by AECOM and its clients as required by law or for use by governmental reviewing agencies. AECOM accepts no responsibility, and denies any liability whatsoever to any party that modifies this drawing without AECOM's express written consent. Do not scale this document. All measurements must be obtained from the stated dimensions.

AECOM

PROJECT

NEW SECURITY FORCES BUILDING

PAYNE BLVD.
CHARLOTTE, NORTH CAROLINA 28208

CLIENT

NORTH CAROLINA AIR NATIONAL GUARD - 145TH AIRLIFT WING

145th AIRLIFT WING
4930 MINUTEMAN WAY
CHARLOTTE, NORTH CAROLINA 28208

ARCHITECT/DESIGNER

AECOM

277 W NATIONWIDE BLVD
COLUMBUS, OH 43215
614-464-4500

http://www.aecom.com

CONSULTANTS

REGISTRATION

STATE OF OHIO
MARTY SIEBE
1817301
REGISTERED ARCHITECT
5/30/2025

KEY PLAN

ISSUE/REVISION

I/R	DATE	DESCRIPTION
	5/30/2025	B-3 SUBMITTAL - FINAL

PROJECT NUMBER

60637899
FJRP229030

SHEET TITLE

TYPICAL MOUNTING HEIGHTS

SHEET NUMBER

A600

©2023 AECOM Corporation

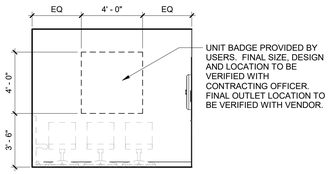

20 ID ENTRY 101 - WEST
A101 Scale: 1/4" = 1'-0"

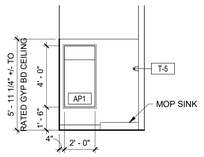

19 HOUSEKEEPING 109 - EAST
A400 Scale: 1/4" = 1'-0"

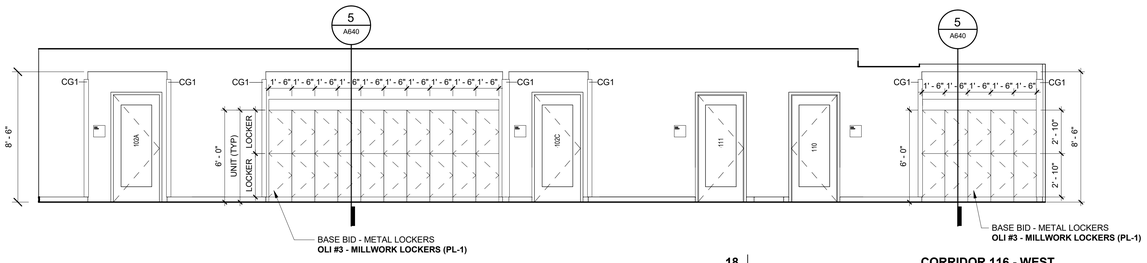

18 CORRIDOR 116 - WEST
A101 Scale: 1/4" = 1'-0"

GENERAL NOTES - INTERIOR ELEVATIONS

1. REFER TO SHEET A-640 FOR CASEWORK LEGEND.
2. REFER TO A-600 FOR TYPICAL MOUNTING HEIGHTS.
3. REFER TO A-800 FOR FINISH LEGEND.
4. FURNITURE IS SHOWN AS HALF-TONE. FOR REFERENCE ONLY. FURNITURE IS NOT IN SCOPE OF THIS PROJECT
5. EQUIPMENT / ACCESSORIES ARE SHOWN AS DASHED.
6. PAINT ALL WALLS PT4, UNLESS OTHERWISE NOTED.
7. ALL FIXTURES TO BE ABA COMPLIANT.
8. FURNITURE / LOOSE FURNISHINGS HIDDEN FOR CLARITY.

INTERIOR ELEVATION - LEGEND

XX ← FINISH TAG

CASEWORK TYPE
XX-(W)-(H) SEE SHEET A640
HEIGHT (IN INCHES)
WIDTH (IN INCHES)

FURNITURE SCHEDULE

MARK	DESCRIPTION	COMMENTS
PR-1	PROJECTOR SCREEN	GFCI
PS-1	PROJECTION SCREEN, CEILING MOUNTED	GFCI
TV-1	LARGE WALL MOUNTED TELEVISION	GFCI
TV-2	SMALL WALL MOUNTED TELEVISION	GFCI
WB-1	WHITEBOARD	GFCI

ACCESSORIES SCHEDULE

MARK	DESCRIPTION	COMMENTS
T-1	SURFACE MOUNTED MULTI-ROLL TOILET TISSUE DISPENSER	CFCI
T-2	HAND TOWEL ROLL DISPENSER	GFCI
T-3	1 1/4" DIAMETER STAINLESS STEEL 18" VERTICAL, 36" AND 42" HORIZONTAL GRAB BAR W/ SNAP FLAGE, SATIN FINISH, SLIP RESISTANT SURFACE	CFCI
T-3A	SHOWER GRAB BAR	CFCI
T-4	SOAP DISPENSER	GFCI
T-5	STAINLESS STEEL MOP AND BROOM HOLDER, 36" W/ FOUR HOLDERS	CFCI
T-6	SURFACE MOUNTED SANITARY NAPKIN DISPOSAL	CFCI
T-7	SURFACE MOUNTED MIRROR	CFCI
T-7A	SURFACE MOUNTED MIRROR	CFCI
T-8	SURFACE-MOUNTED HAT AND COAT HOOK	CFCI
T-9	SHOWER SEAT	CFCI
T-9A	FOLDING SHOWER SEAT	CFCI
T-10	SURFACE MOUNTED TOILET SEAT COVER	CFCI
T-11	SHOWER CURTAIN AND HOOKS	CFCI
T-12	SOAP HOLDER IN SHOWER	CFCI

NOTE: REFER TO SHEET A600 FOR MOUNTING HEIGHTS

ACCESS DOOR SCHEDULE

MARK	DESCRIPTION	COMMENTS
AP1	ACCESS DOOR, FIRE-RATED, UNINSULATED	CFCI

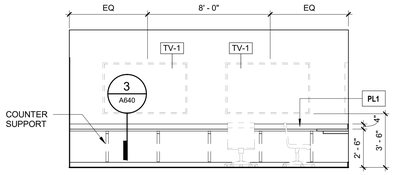

17 BDOC 115 - WEST
A101 Scale: 1/4" = 1'-0"

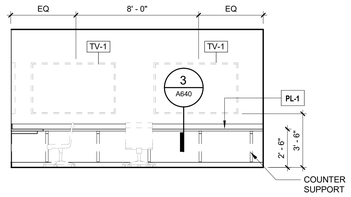

16 BDOC 115 - NORTH
A101 Scale: 1/4" = 1'-0"

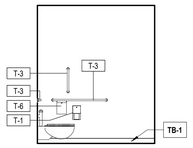

15 UNISEX 115A - WEST
A400 Scale: 1/4" = 1'-0"

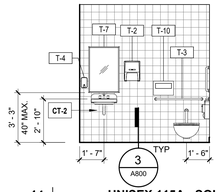

14 UNISEX 115A - SOUTH
A400 Scale: 1/4" = 1'-0"

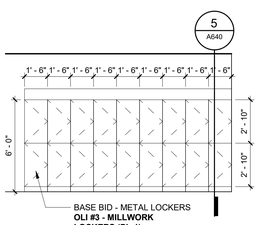

13 LOCKERS 113 - WEST
A101 Scale: 1/4" = 1'-0"

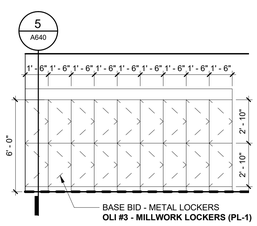

12 LOCKERS 113 - EAST
A101 Scale: 1/4" = 1'-0"

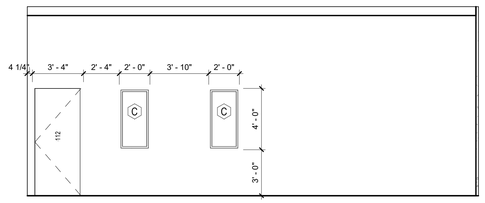

11 WEAPONS VAULT 112 - WEST
A101 Scale: 1/4" = 1'-0"

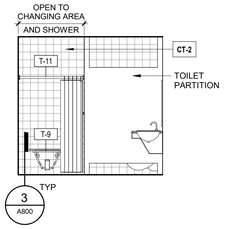

10 WOMEN'S RESTROOM 111 - WEST
A400 Scale: 1/4" = 1'-0"

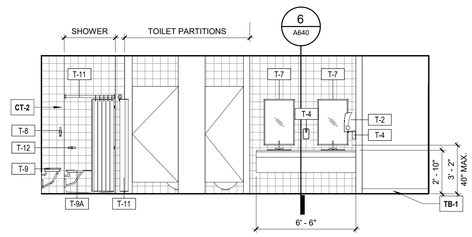

9 WOMEN'S RESTROOM 111 - NORTH
A400 Scale: 1/4" = 1'-0"

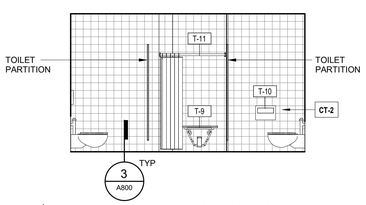

8 MEN'S RESTROOM 110 - WEST
A400 Scale: 1/4" = 1'-0"

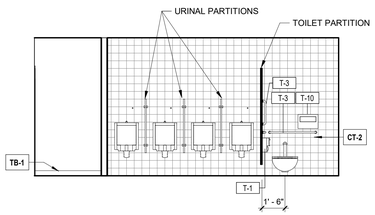

7 MEN'S RESTROOM 110 - SOUTH
A400 Scale: 1/4" = 1'-0"

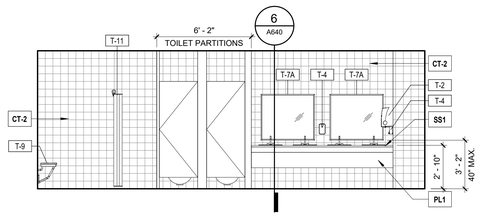

6 MEN'S RESTROOM 110 - NORTH
A400 Scale: 1/4" = 1'-0"

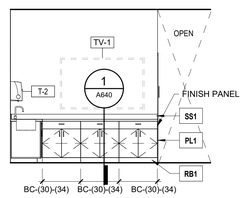

5 BREAK 106 - SOUTH
A400 Scale: 1/4" = 1'-0"

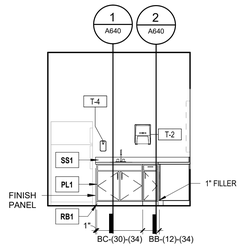

4 BREAK 106 - EAST
A400 Scale: 1/4" = 1'-0"

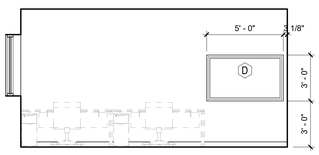

3 PASS ID 103 - SOUTH
A101 Scale: 1/4" = 1'-0"

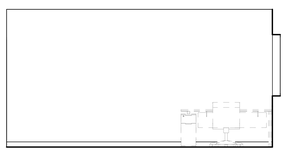

2 PASS ID 103 - NORTH
A101 Scale: 1/4" = 1'-0"

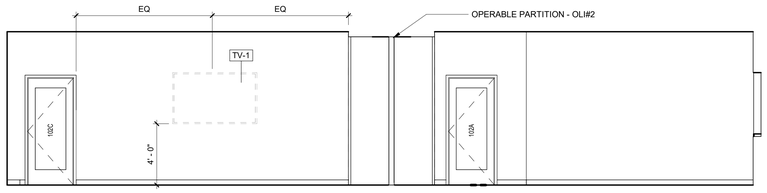

1 TRANING 102 - EAST
A101 Scale: 1/4" = 1'-0"

AECOM

PROJECT
NEW SECURITY FORCES BUILDING
PAYNE BLVD.
CHARLOTTE, NORTH CAROLINA 28208

CLIENT
NORTH CAROLINA AIR NATIONAL GUARD - 145TH AIRLIFT WING
145th AIRLIFT WING
4930 MINUTEMAN WAY
CHARLOTTE, NORTH CAROLINA 28208

ARCHITECT/DESIGNER
AECOM
277 W NATIONWIDE BLVD
COLUMBUS, OH 43215
614-464-4500

http://www.aecom.com

CONSULTANTS

REGISTRATION

STATE OF OHIO
MARTY SIEESE
1817301
REGISTERED ARCHITECT
5/30/2025

KEY PLAN

4 3 2 1 0 4 8
SCALE: 1/4"=1'-0"

ISSUE/REVISION

I/R	DATE	DESCRIPTION
	5/30/2025	B-3 SUBMITTAL - FINAL

PROJECT NUMBER
60637899
FJRP229030

SHEET TITLE
INTERIOR ELEVATIONS

SHEET NUMBER
A601

This drawing has been prepared for the use of AECOM's client and may not be used, reproduced or relied upon by third parties, except as agreed by AECOM and its client, as required by law or for use by governmental reviewing agencies. AECOM accepts no responsibility, and denies any liability whatsoever, to any party that modifies this drawing without AECOM's express written consent. Do not scale this document. All measurements must be obtained from the stated dimensions.

©2023 AECOM Corporation

Project Management Initials: MR Designer: Designer Checker: Checker Approved: ApproverARCH E1 30"x42"
Last Plotted: 5/23/2025 12:13:16 PM
Filename: BIM 360://FSP-NAEN (USA) 60637899-SFNCANG145th60637899_SF-NC ANG_R21_A.rvt
Printed on ___% Post-Consumer Recycled Content Paper

GENERAL NOTES - INTERIOR ELEVATIONS

1. REFER TO SHEET A-640 FOR CASEWORK LEGEND.
2. REFER TO A-600 FOR TYPICAL MOUNTING HEIGHTS.
3. REFER TO A-800 FOR FINISH LEGEND.
4. FURNITURE IS SHOWN AS HALF-TONE, FOR REFERENCE ONLY. FURNITURE IS NOT IN SCOPE OF THIS PROJECT.
5. EQUIPMENT / ACCESSORIES ARE SHOWN AS DASHED.
6. PAINT ALL WALLS PT4, UNLESS OTHERWISE NOTED.
7. ALL FIXTURES TO BE ABA COMPLIANT.
8. FURNITURE / LOOSE FURNISHINGS HIDDEN FOR CLARITY.

INTERIOR ELEVATION - LEGEND

XX ← FINISH TAG

XX-(W)-(H) **SEE SHEET A640**

- CASEWORK TYPE
- HEIGHT (IN INCHES)
- WIDTH (IN INCHES)

FURNITURE SCHEDULE

MARK	DESCRIPTION	COMMENTS
PR-1	PROJECTOR SCREEN	GFCI
PS-1	PROJECTION SCREEN, CEILING MOUNTED	GFCI
TV-1	LARGE WALL MOUNTED TELEVISION	GFCI
TV-2	SMALL WALL MOUNTED TELEVISION	GFCI
WB-1	WHITEBOARD	GFCI

ACCESSORIES SCHEDULE

MARK	DESCRIPTION	COMMENTS
T-1	SURFACE MOUNTED MULTI-ROLL TOILET TISSUE DISPENSER	CFCI
T-2	HAND TOWEL ROLL DISPENSER	GFCI
T-3	1 1/4" DIAMETER STAINLESS STEEL 18" VERTICAL, 36" AND 42" HORIZONTAL GRAB BAR W/ SNAP FLAGE, SATIN FINISH, SLIP RESISTANT SURFACE	CFCI
T-3A	SHOWER GRAB BAR	CFCI
T-4	SOAP DISPENSER	GFCI
T-5	STAINLESS STEEL MOP AND BROOM HOLDER, 36" W/ FOUR HOLDERS	CFCI
T-6	SURFACE MOUNTED SANITARY NAPKIN DISPOSAL	CFCI
T-7	SURFACE MOUNTED MIRROR	CFCI
T-7A	SURFACE MOUNTED MIRROR	CFCI
T-8	SURFACE-MOUNTED HAT AND COAT HOOK	CFCI
T-9	SHOWER SEAT	CFCI
T-9A	FOLDING SHOWER SEAT	CFCI
T-10	SURFACE MOUNTED TOILET SEAT COVER	CFCI
T-11	SHOWER CURTAIN AND HOOKS	CFCI
T-12	SOAP HOLDER IN SHOWER	CFCI

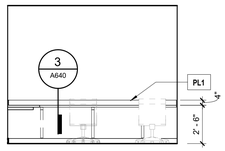

8 A102 **QC/STAN/EVAL/TESTING 211 - EAST**
Scale: 1/4" = 1'-0"

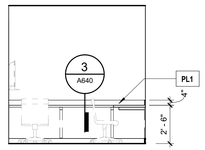

7 A102 **QC/STAN/EVAL/TESTING 211 - NORTH**
Scale: 1/4" = 1'-0"

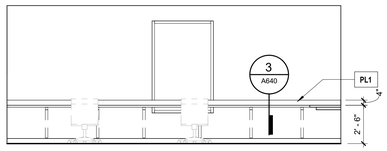

6 A102 **FLIGHT CHIEFS 209 - WEST**
Scale: 1/4" = 1'-0"

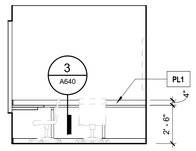

5 A102 **FLIGHT CHIEFS 209 - NORTH**
Scale: 1/4" = 1'-0"

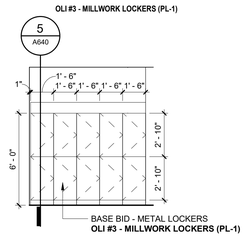

4 A102 **CORRIDOR (LOCKERS) - EAST**
Scale: 1/4" = 1'-0"

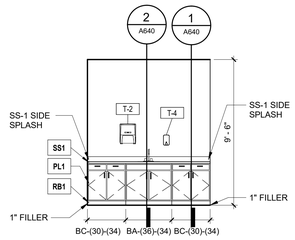

3 A400 **COFFEE 207 - WEST**
Scale: 1/4" = 1'-0"

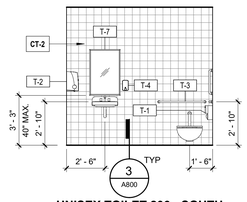

2 A400 **UNISEX TOILET 206 - SOUTH**
Scale: 1/4" = 1'-0"

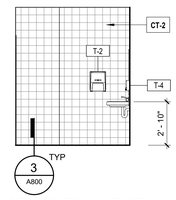

1 A400 **UNISEX TOILET 206 - EAST**
Scale: 1/4" = 1'-0"

AECOM

PROJECT

NEW SECURITY FORCES BUILDING

PAYNE BLVD.
CHARLOTTE, NORTH CAROLINA 28208

CLIENT

NORTH CAROLINA AIR NATIONAL GUARD - 145TH AIRLIFT WING

145th AIRLIFT WING
4930 MINUTEMAN WAY
CHARLOTTE, NORTH CAROLINA 28208

ARCHITECT/DESIGNER

AECOM

277 W NATIONWIDE BLVD
COLUMBUS, OH 43215
614-464-4500

http://www.aecom.com

CONSULTANTS

REGISTRATION

KEY PLAN

4 3 2 1 0 4 8
SCALE: 1/4"=1'-0"

ISSUE/REVISION

I/R	DATE	DESCRIPTION
	5/30/2025	B-3 SUBMITTAL - FINAL

PROJECT NUMBER

60637899
FJRP229030

SHEET TITLE

INTERIOR ELEVATIONS

SHEET NUMBER

A602

This drawing has been prepared for the use of AECOM's client and may not be used, reproduced or relied upon by third parties, except as agreed by AECOM and its client, as required by law or for use by governmental reviewing agencies. AECOM accepts no responsibility, and denies any liability whatsoever, to any party that modifies this drawing without AECOM's express written consent. Do not scale this document. All measurements must be obtained from the stated dimensions.

©2023 AECOM Corporation

Project Management Initials: MR Designer: Designer Checker: Checker Approved: ApproverARCH E1 30"x42"
Last Plotted: 5/30/2025 12:13:18 PM
Filename: BM 060-ISP-AMER (USA) (60637899)-SFNCANG145th60637899_SF-NC-ANG_R21_A.rvt
Printed on ___% Post-Consumer Recycled Content Paper

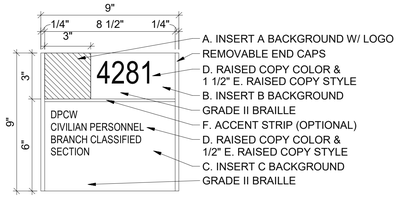

1 OFFICE 9X9 -TYPE 1
SCALE 3" = 1'-0"

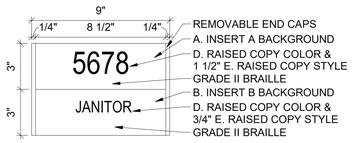

2 ROOM ID -TYPE 2
SCALE 3" = 1'-0"

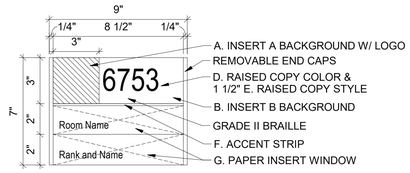

3 OFFICE W/ INSERTS -TYPE 3
SCALE 3" = 1'-0"

LIFE SAFETY DOOR INFORMATIONAL SIGN
TYPICAL DOOR MOUNTED INSTALLATION

16 LIFE SAFETY DOOR SIGN - TYPE 16
SCALE NTS

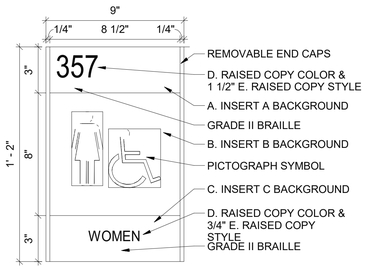

4 WOMEN'S RESTROOM -TYPE 4
SCALE 3" = 1'-0"

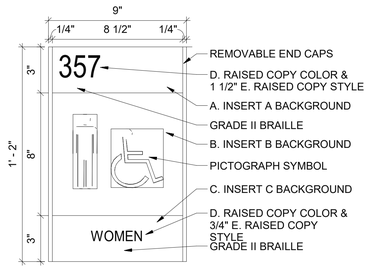

5 MEN'S RESTROOM -TYPE 5
SCALE 3" = 1'-0"

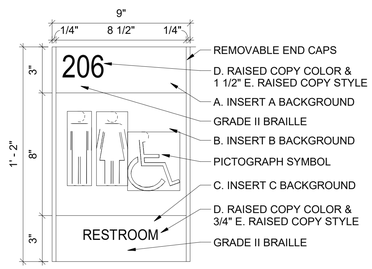

6 UNISEX RESTROOM -TYPE 6
SCALE 3" = 1'-0"

\1\ Figure 4-13 Elevator Egress Signs. /1/

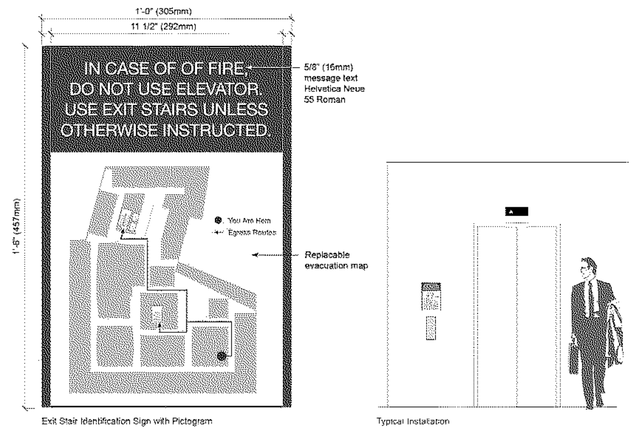

17 ELEVATOR EGRESS SIGN - TYPE 17
SCALE NTS

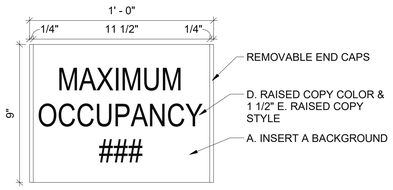

7 MAX OCCUPANCY -TYPE 7
SCALE 3" = 1'-0"

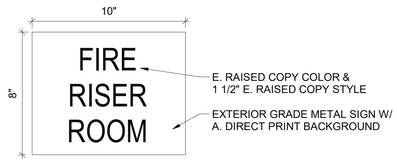

8 FIRE RISER ROOM - TYPE 8
SCALE 3" = 1'-0"

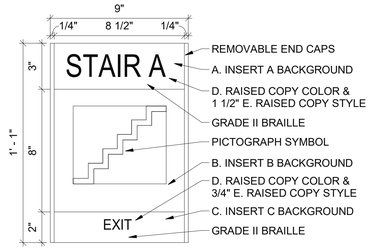

9 STAIR ID -TYPE 9
SCALE 3" = 1'-0"

Figure 4-16 Ceiling-Mounted Directional Signs.

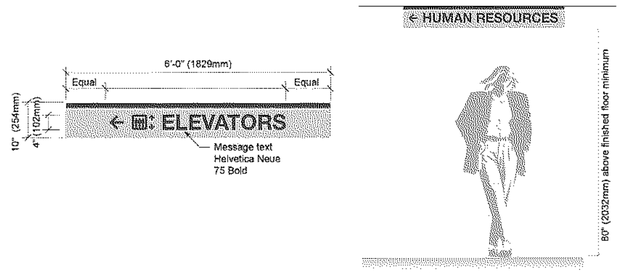

18 CEILING MOUNTED SIGN - TYPE 18
SCALE NTS

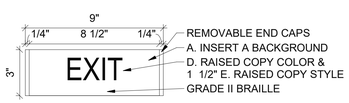

10 EXIT -TYPE 10
SCALE 3" = 1'-0"

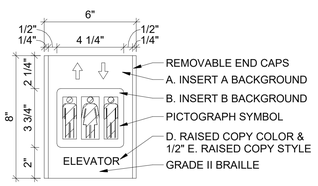

11 ELEVATOR -TYPE 11
SCALE 3" = 1'-0"

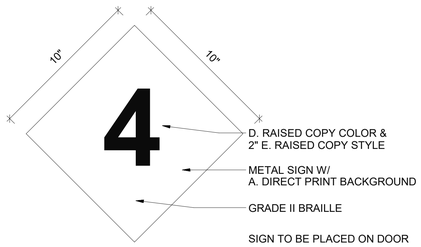

12 VAULT ROOM - TYPE 12
SCALE 3" = 1'-0"

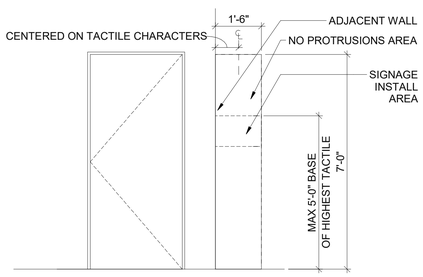

13 MOUNTING -SINGLE DOOR ON ADJACENT WALL
SCALE 1/2" = 1'-0"

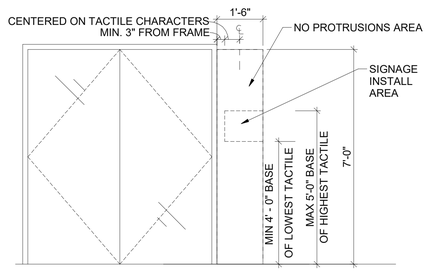

14 MOUNTING -DOUBLE DOORS
SCALE 1/2" = 1'-0"

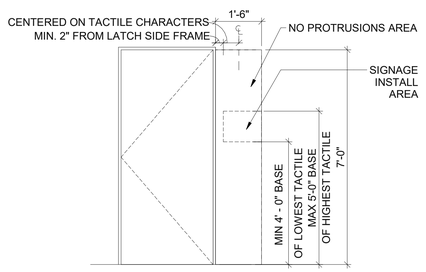

15 MOUNTING -SINGLE DOOR
SCALE 1/2" = 1'-0"

AECOM

PROJECT
NEW SECURITY FORCES BUILDING
PAYNE BLVD.
CHARLOTTE, NORTH CAROLINA 28208

CLIENT
NORTH CAROLINA AIR NATIONAL GUARD - 145TH AIRLIFT WING
145th AIRLIFT WING
4930 MINUTEMAN WAY
CHARLOTTE, NORTH CAROLINA 28208

ARCHITECT/DESIGNER
AECOM
277 W NATIONWIDE BLVD
COLUMBUS, OH 43215
614-464-4500

http://www.aecom.com
CONSULTANTS

REGISTRATION

KEY PLAN

ISSUE/REVISION

I/R	DATE	DESCRIPTION
	5/30/2025	B-3 SUBMITTAL - FINAL

PROJECT NUMBER
60637899
FJRP229030
SHEET TITLE
SIGNAGE

SHEET NUMBER
A610

This drawing has been prepared for the use of AECOM's client and may not be used, reproduced or relied upon by third parties, except as agreed by AECOM and its client, as required by law or for use by governmental reviewing agencies. AECOM accepts no responsibility, and denies any liability whatsoever, to any party that modifies this drawing without AECOM's express written consent. Do not scale this document. All measurements must be obtained from the stated dimensions.

©2023 AECOM Corporation

Project Management Initials: MR Designer: Designer Checker: Checker Approved: ApproverARCH E1 30"x42"
Last Plotted: 5/23/2025 12:15:18 PM
Filename: BIM 360://BP-NAEER (USA) 60637899-SFNCANG145ft60637899_SF-NC ANG_R21_A.rvt
Printed on ___% Post-Consumer Recycled Content Paper

SIGNAGE SCHEDULE			
ROOM NUMBER	TYPE MARK	SIGN TYPE	ROOM NAME
101	S2	TYPE 2	ID ENTRY
101	S2	TYPE 2	ID ENTRY
102A	S2	TYPE 2	ACTIVE TRAINING
102B	S2	TYPE 2	TRAINING
103	S2	TYPE 2	PASS ID
104	S2	TYPE 2	PPE STO/WEAPONS CLEANING
108	S9	TYPE 9	STAIR
109	S2	TYPE 2	HOUSE KEEPING
110	S5	TYPE 5	MENS
111	S4	TYPE 4	WOMENS
112	S2	TYPE 2	WEAPONS VAULT
112	S12	TYPE 12	WEAPONS VAULT
114	S2	TYPE 2	COMMUNICATIONS ROOM
115	S1	TYPE 1	BDOC
115A	S6	TYPE 6	UNISEX TOILET
116	S2	TYPE 2	CORR
116	S11	TYPE 11	CORR
130	S17	TYPE 17	ELEVATOR
200	S1	TYPE 1	CONF. ROOM
201	S1	TYPE 1	COMMANDER
202	S1	TYPE 1	EXECUTIVE OFFICER
203	S1	TYPE 1	FIRST SERGEANT
204	S1	TYPE 1	SECURITY MGR/INVEST S2
205	S1	TYPE 1	SECURITY FORCES MGR
206	S6	TYPE 6	UNISEX TOILET
208	S2	TYPE 2	PRINT/COPY/ ELEV.EQ.RM.
210	S10	TYPE 10	VEST
210	S1	TYPE 1	VEST
211	S1	TYPE 1	QC/STAN/ EVAL/ TESTING
212	S9	TYPE 9	STAIR
222	S11	TYPE 11	CORR
230	S17	TYPE 17	ELEVATOR

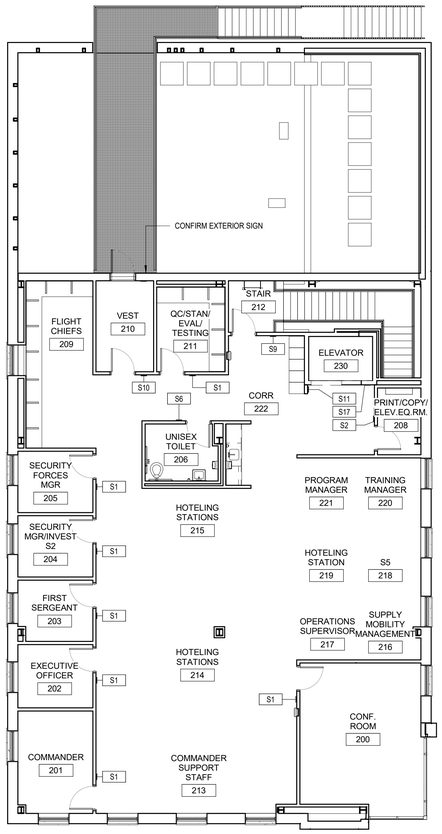

2 | SIGNAGE PLAN - LEVEL 2
A201 | Scale: 1/8" = 1'-0"

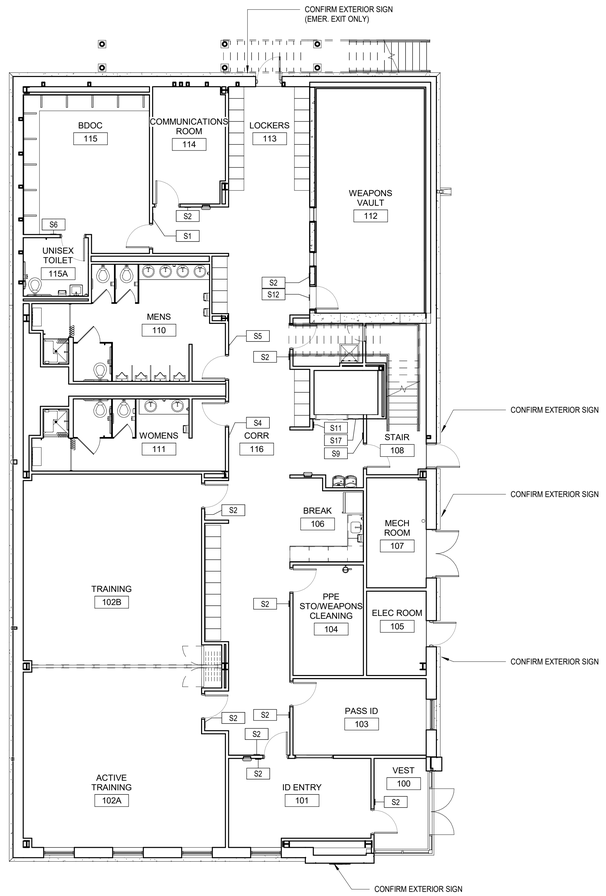

1 | SIGNAGE PLAN - LEVEL 1
A201 | Scale: 1/8" = 1'-0"

AECOM

PROJECT

NEW SECURITY FORCES BUILDING

PAYNE BLVD.
CHARLOTTE, NORTH CAROLINA 28208

CLIENT

NORTH CAROLINA AIR NATIONAL GUARD - 145TH AIRLIFT WING

145th AIRLIFT WING
4930 MINUTEMAN WAY
CHARLOTTE, NORTH CAROLINA 28208

ARCHITECT/DESIGNER

AECOM

277 W NATIONWIDE BLVD
COLUMBUS, OH 43215
614-464-4500

http://www.aecom.com

CONSULTANTS

REGISTRATION

STATE OF OHIO
MARTY SIEESE
1817301
REGISTERED ARCHITECT
5/30/2025

KEY PLAN

8 6 4 2 0 8 16
SCALE: 1/8"=1'-0"

ISSUE/REVISION

I/R	DATE	DESCRIPTION
	5/30/2025	B-3 SUBMITTAL - FINAL

PROJECT NUMBER

60637899
FJRP229030

SHEET TITLE

SIGNAGE

SHEET NUMBER

A611

N

The drawing has been prepared for the use of AECOM's client and may not be used, reproduced or relied upon by third parties, except as agreed by AECOM and its client, as required by law or for use by governmental reviewing agencies. AECOM accepts no responsibility, and denies any liability whatsoever, to any party that modifies this drawing without AECOM's express written consent. Do not scale this document. All measurements must be obtained from the stated dimensions.

©2023 AECOM Corporation

Project Management Initials: MR Designer: Designer Checker: Checker Approved: ApproverARCH E1 30"x42"

Last Plotted: 5/23/2025 12:13:20 PM
Filename: BM 300-ISP-AMER (USA) 60637899-SFNCANG145th63837899_SFNC ANG_R21_A.rvt

Printed on ___% Post-Consumer Recycled Content Paper

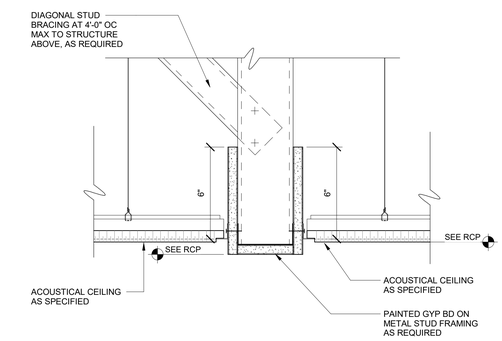

7 **CEILING TRANSITION - ACT / GYPSUM BOARD BULKHEAD**
A151 Scale: 3" = 1'-0"

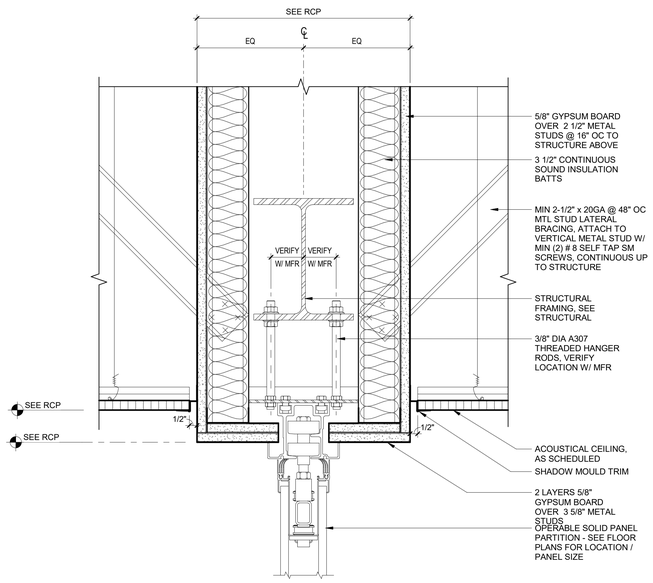

NOTE: GC TO COORDINATE ABOVE CEILING DUCTWORK/ELECTRICAL TO ACCOMMODATE OPERABLE WALL PARTITION. GC TO CONFIRM STRUCTURAL SUPPORT FOR OPERABLE WALL PARTITION WITH THE MANUFACTURER AND ENGAGE STRUCTURAL ENGINEER AS REQUIRED.

6 **OL1 #2 - HEAD DETAIL - OPERABLE WALL PARTITION**
A150 Scale: 3" = 1'-0"

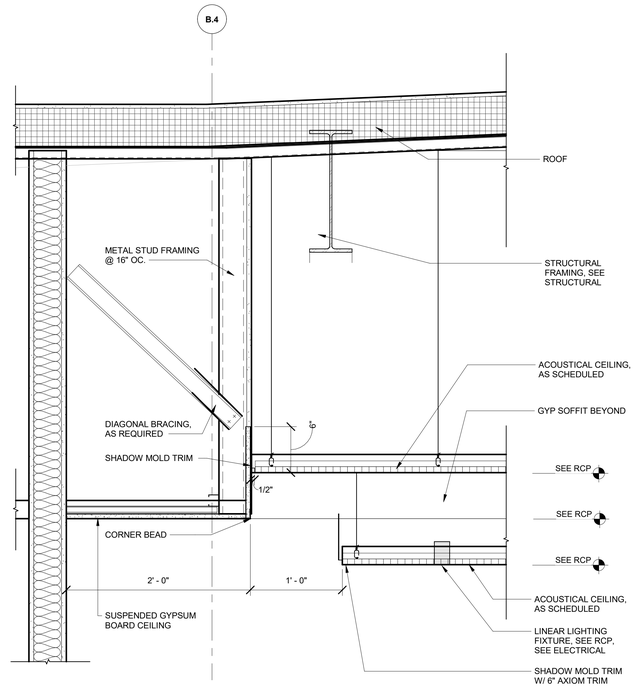

5 **CEILING DETAIL - CONFERENCE ROOM 200**
A420 Scale: 1 1/2" = 1'-0"

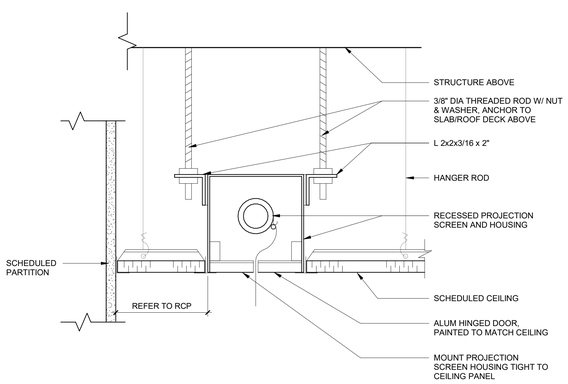

4 **CEILING DETAIL AT RECESSED PROJECTION SCREEN**
A150 Scale: 3" = 1'-0"

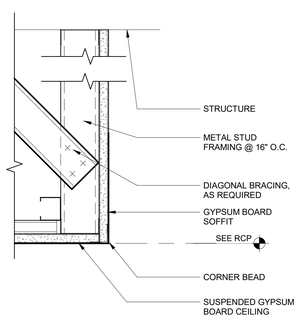

3 **CEILING TRANSITION - GYPSUM BOARD SOFFIT**
A700 Scale: 3" = 1'-0"

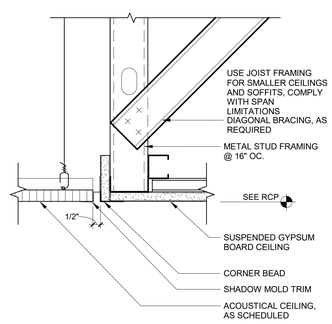

2 **CEILING TRANSITION - GYPSUM BOARD / ACT**
Scale: 3" = 1'-0"

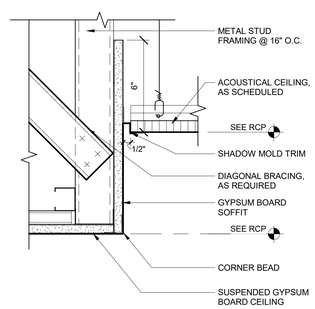

1 **CEILING TRANSITION - ACT / GYPSUM BOARD**
A150 Scale: 3" = 1'-0"

Project Management Initials: MR Designer: Designer Checker: Checker Approved: Approver/ARCH E1 30"x42"

Last Plotted: 5/23/2025 12:13:20 PM
Filename: BM-300-ISP-AAREX-ROAA 60637899-SFNCANG145th0637899_SF-NC ANG_R21_A-v1

Printed on ___% Post-Consumer Recycled Content Paper

The drawing has been prepared for the use of AECOM's client and may not be used, reproduced or relied upon by third parties, except as agreed by AECOM and its client, as required by law or for use by governmental reviewing agencies. AECOM accepts no responsibility, and denies any liability whatsoever, to any party that modifies this drawing without AECOM's express written consent. Do not scale this document. All measurements must be obtained from the stated dimensions.

AECOM

PROJECT
NEW SECURITY FORCES BUILDING
PAYNE BLVD.
CHARLOTTE, NORTH CAROLINA 28208

CLIENT
NORTH CAROLINA AIR NATIONAL GUARD - 145TH AIRLIFT WING
145th AIRLIFT WING
4930 MINUTEMAN WAY
CHARLOTTE, NORTH CAROLINA 28208

ARCHITECT/DESIGNER
AECOM
277 W NATIONWIDE BLVD
COLUMBUS, OH 43215
614-464-4500

http://www.aecom.com

CONSULTANTS

REGISTRATION

STATE OF OHIO
MARTY SIEBSE
1817301
REGISTERED ARCHITECT
5/30/2025

KEY PLAN

ISSUE/REVISION

I/R	DATE	DESCRIPTION
	5/30/2025	B-3 SUBMITTAL - FINAL

PROJECT NUMBER
60637899
FJRP229030

SHEET TITLE
INTERIOR CEILING DETAILS

SHEET NUMBER
A630

©2023 AECOM Corporation

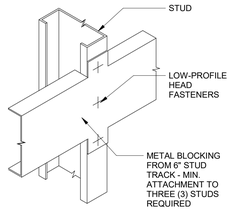

7 METAL BLOCKING
Scale: 3" = 1'-0"

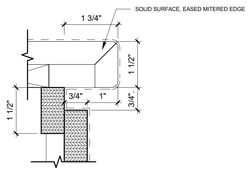

4 COUNTERTOP EDGE, TYP.
A640 Scale: 6" = 1'-0"

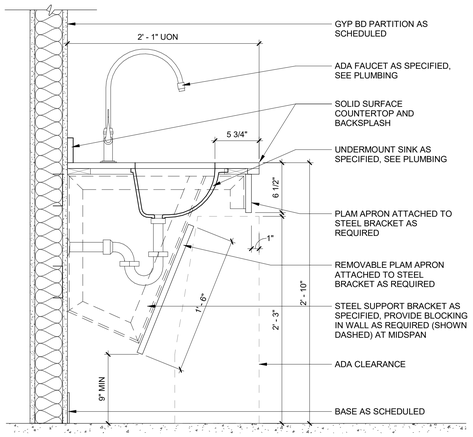

6 TOILET ROOM ADA DETAIL
A601 Scale: 1 1/2" = 1'-0"

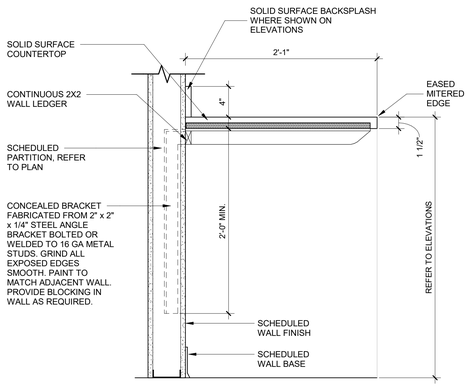

3 COUNTERTOP
A601 Scale: 1 1/2" = 1'-0"

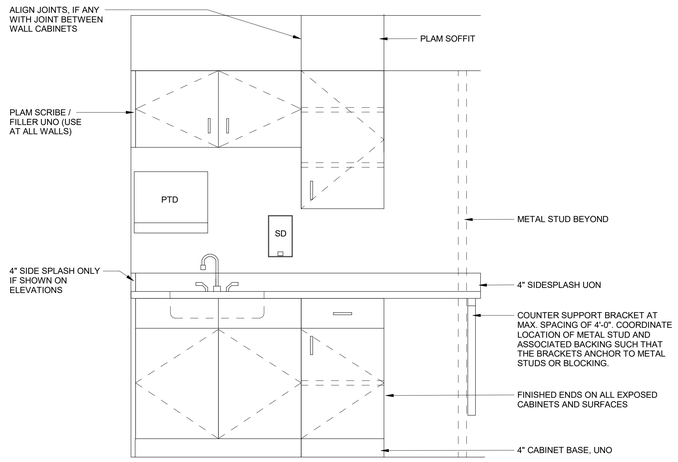

TYPICAL CASEWORK ELEVATION
NTS

GENERAL NOTES - FINISH FLOOR

A. ENDS OF COUNTERTOPS TO OVERHANG CABINET BASES 3/4", TYPICAL.
B. ALL COUNTERTOPS ARE 2'-1" DEEP, UNO.
C. SEE PLUMBING DRAWINGS FOR SINKS AND FIXTURES.
D. COORDINATE BLOCKING LOCATIONS WITH THE GYPSUM WALL BOARD CONTRACTOR.
E. ALL DOORS AND DRAWERS TO HAVE PULLS.
F. CABINETRY MANUFACTURER: PLEASE NOTE THAT THE HEIGHT OF THE COUNTERTOPS AND THE HEIGHT OF THE WALL CABINETS ARE TO BE MAINTAINED DUE TO PAPER TOWEL DISPENSERS BEING PLACED BETWEEN THE BACK SPLASH AND THE BOTTOM OF THE WALL CABINETS IN MANY LOCATIONS. THE INTENT IS TO MAINTAIN 14" MINIMUM BETWEEN THE COUNTERTOP SPLASH AND THE BOTTOM OF THE WALL CABINET.
G. PROVIDE UNDER CABINET LIGHTS AS SHOWN ON ELECTRICAL DRAWINGS.
H. PROVIDE SCRIBES / FILLERS BETWEEN ALL WALLS AND CABINET ENDS, UNO.
I. PROVIDE MINIMUM 2" VERTICAL FILLERS BETWEEN THE CORNER CABINETS AND A FILLER PANEL BELOW WALL CABINETS IN AN "L" SHAPE CONFIGURATION.
J. GROMMETS TO BE INSTALLED IN COUNTERTOPS AT EACH KNEE SPACE. FOR KNEE SPACES WIDER THAN 48", PROVIDE GROMMETS AT 48" ON CENTER, MAX.
K. BASE AND WALL CABINETS - PROVIDE (1) ADJUSTABLE SHELF PER UNIT, UNLESS NOTED OR SHOWN OTHERWISE. PROVIDE (2) ADJUSTABLE SHELVES FOR 30" HIGH WALL CABINETS.
L. ALL EXPOSED ENDS TO BE PLAM.

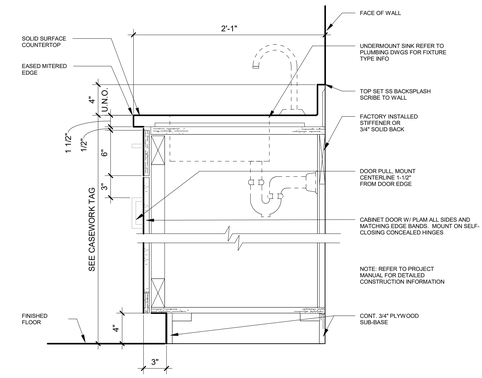

2 BE BASE CABINET W/ SINK
A601 Scale: 1 1/2" = 1'-0"

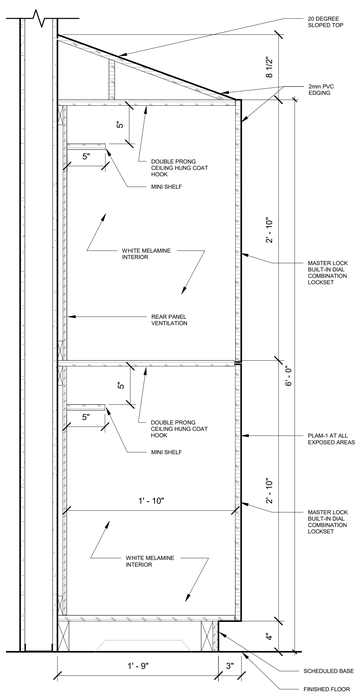

5 OLI #3 MILLWORK LOCKER TYP
A601 Scale: 1 1/2" = 1'-0"

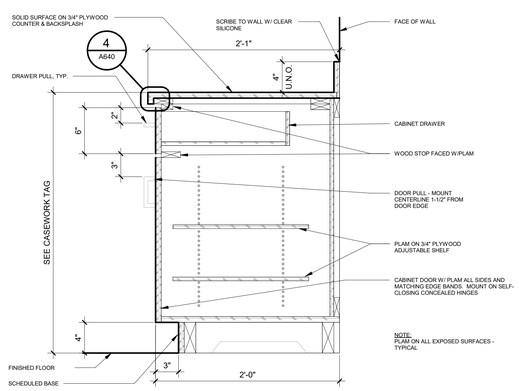

1 BB AND BC BASE CABINET DRAWER AND DOORS
A601 Scale: 1 1/2" = 1'-0"

CASEWORK LEGEND

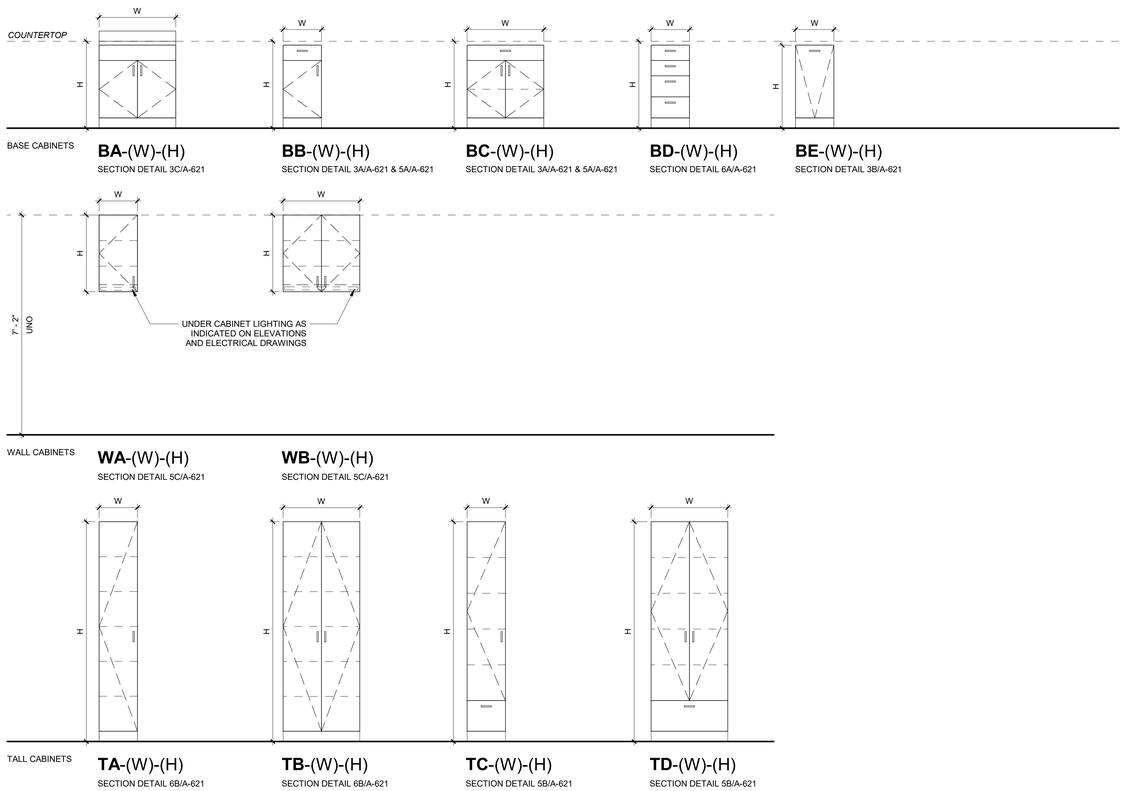

AECOM

PROJECT
NEW SECURITY FORCES BUILDING
PAYNE BLVD.
CHARLOTTE, NORTH CAROLINA 28208

CLIENT
NORTH CAROLINA AIR NATIONAL GUARD - 145TH AIRLIFT WING
145th AIRLIFT WING
4930 MINUTEMAN WAY
CHARLOTTE, NORTH CAROLINA 28208

ARCHITECT/DESIGNER
AECOM
277 W NATIONWIDE BLVD
COLUMBUS, OH 43215
614-464-4500

http://www.aecom.com

CONSULTANTS

REGISTRATION

STATE OF OHIO
MARTY SIEBSE
1817301
REGISTERED ARCHITECT
5/30/2025

KEY PLAN

ISSUE/REVISION

I/R	DATE	DESCRIPTION
	5/30/2025	B-3 SUBMITTAL - FINAL

PROJECT NUMBER
60637899
FJRP229030

SHEET TITLE
INTERIOR MILLWORK ELEVATIONS AND DETAILS

SHEET NUMBER
A640

This drawing has been prepared for the use of AECOM's client and may not be used, reproduced or relied upon by third parties, except as agreed by AECOM and its client, as required by law or for use by governmental reviewing agencies. AECOM accepts no responsibility, and denies any liability whatsoever, to any party that modifies this drawing without AECOM's express written consent. Do not scale this document. All measurements must be obtained from the stated dimensions.

Project Management Initials: MR Designer: Designer Checker: Checker Approved: Approver ARCH E1 30"x42"
Last Plotted: 5/23/2025 12:13:21 PM
Filename: BIM 360:R8-AMER\USA\60637899-SFNCANG\145th\60637899_SF-NC AND_R21_A.rvt

Printed on ____% Post-Consumer Recycled Content Paper
©2023 AECOM Corporation

BASE PARTITIONS

(2) LAYERS OF 5/8" GYB MTL STUDS	ACOUSTICAL INSULATION BATTS (2) LAYERS OF 5/8" GYB MTL STUDS	**CORRIDOR** ACOUSTICAL INSULATION BATTS (3) LAYERS OF 5/8" GYB MTL STUDS	ACOUSTICAL INSULATION BATTS (4) LAYERS OF 5/8" GYB MTL STUDS	**VOID** **ROOM** DIRECT APPLIED, FURRING OR MTL STUDS (1) LAYER OF 5/8" GYB
				DIRECT APPLIED — E — 5/8" OA
1 5/8" STUD — A1 — STC na, 2 7/8"OA	1 5/8" STUD — B1 — STC na, 2 7/8"OA	1 5/8" STUD — C1 — STC na, 3 1/2" OA	1 5/8" STUD — D1 — STC na, 4 1/8" OA	7/8" FURRING — E0 — 1 1/2" OA
2 1/2" STUD — A2 — STC na, 3 3/4" OA	2 1/2" STUD — B2 — STC na, 3 3/4" OA	2 1/2" STUD — C2 — STC 43, 4 3/8" OA	2 1/2" STUD — D2 — STC 49, 5" OA	1 5/8" STUD — E1 — 2 1/4" OA
3 5/8" STUD — A3 — STC 37, 4 7/8" OA	3 5/8" STUD — B3 — STC 40, 4 7/8" OA	3 5/8" STUD — C3 — STC 43, 5 1/2" OA	3 5/8" STUD — D3 — STC 49, 6 1/8" OA	2 1/2" STUD — E2 — 3 1/8"OA
6" STUD — A6 — STC 37, 7 1/4" OA	6" STUD — B6 — STC 40, 7 1/4" OA	6" STUD — C6 — STC 43, 7 7/8" OA	6" STUD — D6 — STC 49, 8 1/2" OA	3 5/8" STUD — E3 — 4 1/4" OA
NOTES: - PROVIDE 1 HOUR FIRE RATING WHERE INDICATED ON LIFE SAFETY PLANS UL U419 & w/ GYB-41 U425.	**NOTES:** - PROVIDE 1 HOUR FIRE RATING WHERE INDICATED ON LIFE SAFETY PLANS UL U419 & w/ GYB-41 U404.	**NOTES:** - PROVIDE 1 HOUR FIRE RATING WHERE INDICATED ON LIFE SAFETY PLANS UL U419 & w/ GYB-41 U425 w/ OPTIONAL ITEM 11.	**NOTES:** - PROVIDE 1 OR 2 HOUR FIRE RATING WHERE INDICATED ON LIFE SAFETY PLANS UL U419 & w/ GYB-41 U404A OR U404C.	6" STUD — E6 — 6 5/8" OA **NOTES:**

VOID **ROOM** DIRECT APPLIED, FURRING OR MTL STUDS (2) LAYERS OF 5/8" GYB	**VOID** **ROOM** ACOUSTICAL INSULATION BATTS (2) LAYERS OF 5/8" GYB MTL STUDS	LIGHT WEIGHT CMU	CONCRETE	**SHAFT** **STAIR/ROOM** ACOUS INSUL BATTS SHAFT LINER GYB-32 (2) LAYERS OF 5/8" GYB-11 SHAFT WALL MTL STUDS
DIRECT APPLIED — G — 1 1/4" OA		4" CMU — M4 — 44 STC, 3 5/8" OA	4" — P4	
7/8" FURRING — G0 — 2 1/8" OA	1 5/8" STUD — H1 — STC na, 2 7/8"OA	6" CMU — M6 — 45 STC, 5 5/8" OA	6" — P6	
1 5/8" STUD — G1 — 2 7/8" OA	2 1/2" STUD — H2 — STC na, 3 3/4" OA	8" CMU — M8 — 48 STC, 7 5/8" OA	8" — P8	2 1/2" STUD — S2 — STC 48, 3 3/4" OA
2 1/2" STUD — G2 — 3 3/4"OA	3 5/8" STUD — H3 — STC 38, 4 7/8" OA	12" CMU — M12 — 52 STC, 11 5/8" OA	10" — P10	4" STUD — S4 — STC 50, 5 1/4" OA
3 5/8" STUD — G3 — 4 7/8" OA	6" STUD — H6 — STC 41, 7 1/4" OA		16" — P16	6" STUD — S6 — STC 50, 7 1/4" OA
6" STUD — G6 — 7 1/4" OA	**NOTES:**	**NOTES:** PROVIDE 1 OR 2 HOUR FIRE RATING WHERE SHOWN ON LIFE SAFETY PLANS UL 900 SERIES - CMU REINFORCEMENT & MAX HEIGHT AS SPECD,DETAILED OR SCHEDULED.	**NOTES:**	**NOTES:** PROVIDE 1 OR 2 HOUR FIRE RATING WHERE INDICATED ON LIFE SAFETY PLANS UL U415B & w/ GYB-41 U415D. MAX FIRE RATING OF 2HR
NOTES:				

SHAFT **STAIR/ROOM** ACOUS INSUL BATTS SHAFT LINER GYB-32 (1) LAYER OF 5/8" GYB-11 SHAFT WALL MTL STUDS	
2 1/2" STUD — T2 — STC na, 3 1/8" OA	
4" STUD — T4 — STC 39, 4 5/8" OA	
6" STUD — T6 — STC 39, 6 5/8" OA	
NOTES: PROVIDE 1 HOUR FIRE RATING WHERE INDICATED ON LIFE SAFETY PLANS UL U415A - NOT FOR USE w/ GYB-41. MAX FIRE RATING OF 1HR	

PARTITION TYPE KEY:

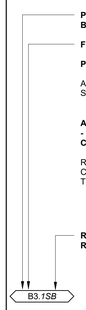

ALL PARTITIONS ARE FULL HEIGHT AND EXTEND TO UNDERSIDE OF STRUCTURE UNLESS OTHERWISE NOTED.

ANCILLARY CONSTRUCTION DESIGNATION
- NOT ALWAYS USED - 1 OR 2 CHARACTERS OR COMBINATION OF 2 CHARACTERS IF MORE THAT ONE MODIFIER USED ON WALL

REFER TO DETAILS AND/OR PARTITION TYPE FOR ANY SPECIAL CONSTRUCTION ASSEMBLIES OR APPLICATIONS OF THE PROVIDED PARTITION TYPES.

REQUIRED PARTITION RATING WHEN INDICATED AFTER "."
REFER TO BELOW FOR RATED PARTITION DESIGNATION.

PARTITION RATING DESIGNATION LIST:
SEE LIFE SAFETY DRAWINGS FOR COMPLETE RATING DESIGNATION INFO

FIRE WALLS
- 2FW — 2 HR RATED FIRE WALL
- 3FW — 3 HR RATED FIRE WALL
- 4FW — 4 HR RATED FIRE WALL

FIRE BARRIERS
- 1FB — 1 HR RATED FIRE BARRIER
- 2FB — 2 HR RATED FIRE BARRIER
- 3FB — 3 HR RATED FIRE BARRIER
- 4FB — 4 HR RATED FIRE BARRIER

FIRE PARTITIONS
- 1/2FP — 1/2 HR RATED FIRE PARTITION
- 1FP — 1 HR RATED FIRE PARTITION

SMOKE BARRIERS
- 1SB — 1 HR RATED SMOKE BARRIER

FIRE/SMOKE BARRIERS
- 1FSB — 1 HR RATED FIRE/SMOKE BARRIER
- 2FSB — 2HR RATED FIRE/SMOKE BARRIER

SMOKE PARTITION
- SP — SMOKE PARTITION

***ALL RATED PARTITIONS TO BE FULL HEIGHT UNO**

PARTITION TYPE NOTES:

1. ALL GYPSUM BOARD PARTITIONS SHALL BE TYPE [B3] UNLESS OTHERWISE NOTED.
2. SEE LIFE SAFETY PLANS FOR FIRE/SMOKE RATING AND/OR HEIGHTS OF PARTITIONS.
3. INTERIOR STUDS: NOT LESS THAN 33 MIL BASE METAL THK AND NOT MORE THAN 1'-4" ON CENTER UNLESS INDICATED OTHERWISE.
4. PROVIDE 5/8" GYB-11 (TYPE X) UNLESS NOTED OTHERWISE.
5. PROVIDE BACKING/BLOCKING IN PARTITIONS FOR WALL HUNG ITEMS.
6. PROVIDE DOUBLE STUDS AT EACH SIDE OF OPENINGS. EXTEND STUDS FROM FLOOR TO UNDERSIDE OF STRUCTURE.
7. ALL GYB PARTITIONS ARE FULL HEIGHT UNLESS OTHERWISE NOTED.
8. FULL HEIGHT PARTITIONS SHALL EXTEND FROM THE FLOOR TO THE UNDERSIDE OF THE STRUCTURE ABOVE. PROVIDE DEFLECTION CONNECTION PER DETAIL
9. CONSTRUCT NON-FULL HEIGHT PARTITIONS TO 6" ABOVE CEILING. PROVIDE BRACING OF THESE NON-FULL HEIGHT PARTITIONS AT 4'-0" OC MAX USING ONE OF THE FOLLOWING ELEMENTS:
   A. INTERSECTING PARTITIONS.
   B. FULL HEIGHT DOUBLE STUDS AT JAMBS OF DOORS AND BORROWED LIGHTS.
   C. OTHER FULL HEIGHT DOUBLE STUDS OR 45 DEGREE STUD BRACING.
10. ALL GYB PARTITIONS ARE TO HAVE ACOUSTIC INSULATION BATTS FOR THE HEIGHT OF THE PARTITION. ACOUSTIC INSULATION BATTS SHALL BE FRICTION FIT IN STUD CAVITY & FURNISHED IN THICKNESS REQUIRED TO PROVIDE STC RATING LISTED. INSTALL ABOVE AND BELOW ANY OPENINGS AND SEAL PENETRATIONS AND PERIMETER OF PARTITION WITH ACOUSTICAL SEALANT OR FIRESTOPPING IF FIRE RATED. SOUND ATTENUATION BATTS ARE NOT REQUIRED AT THE FOLLOWING EXCEPTIONS:
    A. EXTERIOR WALL FURRING (BATTS ARE REQUIRED AT EXTERIOR COLUMN FURRING).
    B. LOW WALLS THAT DO NOT EXTEND TO THE CEILING.
    C. FREE STANDING COLUMN FURRING.
11. NON-FULL HEIGHT PARTITIONS SHALL EXTEND TO 6" ABOVE CEILING. THOSE PARTITIONS W/ ACOUSTIC INSULATION BATTS SHALL ALSO HAVE BATTS INSTALLED OVER CEILING PER DETAILS.
12. PROVIDE CONTROL JOINTS IN PARTITIONS PER DETAILS.
13. MAINTAIN CONTINUITY OF HIGHER RATED PARTITIONS AT INTERSECTION WITH NON-RATED OR LESSER RATED PARTITIONS.
14. AT NON-RATED PARTITIONS MAINTAIN CONTINUITY OF HIGHER STC RATED PARTITIONS AT INTERSECTION WITH LESSER STC RATED PARTITIONS.
15. CONSTRUCT UNBALANCED PARTITIONS w/ DOUBLE LAYER TO THE CORRIDOR SIDE.
16. DIMENSIONING OF PARTITIONS ON THE FLOOR PLANS ARE TO THE FACE OF PARTITION TYPE EXCLUSIVE OF ANY FINISH THICKNESS UNLESS INCLUDED IN PARTITION TYPE.
17. COORDINATE WITH STRUCTURAL DOCUMENTS FOR CMU DETAILS, NOTES AND LINTEL SCHEDULES.
18. REFER TO INTERIOR ELEVATIONS FOR SPECIALTY WALL DETAILS.

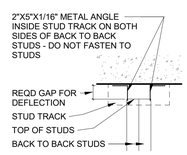

7 TYPICAL STUD DEFLECTION
Scale: 1 1/2" = 1'-0"

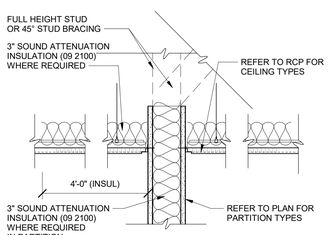

5 NON-FULL HEIGHT PARTITIONS
Scale: 1 1/2" = 1'-0"

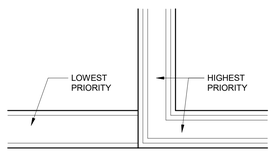

WALL PRIORITY LEGEND:

3 HR RATED WALL (PER IBC 707)	PRIORITY 1 HIGHEST
2 HR RATED FIRE/SMOKE BARRIER(PER IBC 709)	PRIORITY 2
2 HR RATED FIRE BARRIER (PER IBC 707)	PRIORITY 3
1 HR RATED SMOKE BARRIER (PER IBC 709)	PRIORITY 4
1 HR RATED FIRE BARRIER (PER IBC 707)	PRIORITY 5
SMOKE PARTITION (PER IBC 710)	PRIORITY 6
NON-RATED ACOUSTICAL PARTITION	PRIORITY 7
NON-RATED PARTITION	PRIORITY 8 LOWEST

NOTES:
1. SCHEDULE CONSTRUCTION OF PARTITIONS IN ORDER TO MAINTAIN CONTINUITY OF RATING PRIORITY

4 PRIORITY WALLS
Scale: 1 1/2" = 1'-0"

BACKING/BLOCKING SCHEDULE/NOTES.
1. PROVIDE BACKING/BLOCKING IN GYB PARTITIONS FOR ALL WALL-HUNG ITEMS.
2. THESE ANCHORING DETAILS ARE SHOWN AS TYPICAL AND ARE NOT INTENDED TO BE ALL INCLUSIVE. PROVIDE WOOD OR STEEL BACKING IN PARTITIONS FOR WALL HUNG ITEMS, SUCH AS WALL CABINETS, BLDG ACCESS, BATHROOM ACCESS, SHELVING, DOOR HOLD-OPENS, & STOPS, ETC, INCLUDING NIC, BO, BOF, & RE ITEMS.

3. USE THE FOLLOWING ASSUMED LOADS TO DETERMINE BLKG & FASTENER REQUIREMENTS UNLESS GREATER LOADS ARE KNOWN.

a. S DISP, PTC, TPH, MIRRORS, COAT HOOKS, BPG, TOWEL BAR & RING, MOP HOLDER, ASH URN, ETC-USE 100lbs MOP HOLDER, ASH URN ETC - USE 100 LB.
b. HANDRAIL, BUMPER RAILS - USE 200 LB CONCENTRATED LOAD.
c. GRAB BARS - USE 250 LB CONCENTRATED LOAD.
d. WALL CABINETS - USE WEIGHT OF CABINET PLUS 100LB PER FOOT OF SHELF.
e. COUNTERTOPS- USE WEIGHT OF COUNTER TOP PLUS 55 LB PER FOOT OF COUNTER
f. 12" ADJ SHELVES - USE 40 LB PER BRKT
g. 18" ADJ SHELVES - USE 55 LB PER BRKT
h. 24" ADJ SHELVES - USE 83 LB PER BRKT

LOADING TABLE NOTES:
1. SEE TABLE 1 BELOW FOR SIZE OF WOOD BLKG, QUANTITY AND SIZE OF SCREWS FOR CONNECTION TO EACH STUD.
2. SEE TABLE 2 OR 3 BELOW FOR QUANTITY AND SIZE OF SCREWS FOR CONNECTION OF WALL HUNG ITEMS, IF NOT ALREADY PROVIDED BY MFR OF WALL HUNG ITEM.

TABLE 1

MAXIMUM ALLOWABLE LOAD-IN POUNDS				
WOOD SCREW		LENGTH OF WALL HUNG ITEM		
QUAN.	SIZE	1'-4" OR LESS	2'-8" OR LESS	2'-9" OR MORE
2x4 WOOD BLOCKING				
2	#6	160	320	480
2	#8	240	480	700
2	#10	320	640	700
2x6 WOOD BLOCKING				
3	#6	240	480	700
3	#8	360	700	700
3	#10	480	700	700

LOADS BASED ON GROUP II WOOD SPECIES & SCREWS EMBEDDED IN WOOD A MIN OF 7 TIMES THE SCREW DIA WITH SCREWS INSERTED IN SIDE GRAIN ON ONE SIDE & SIDE GRAIN ON OPPOSITE END.

TABLE 2

MAXIMUM ALLOWABLE LOAD-IN POUNDS				
SCREW SIZE	QUANTITY OF SCREWS			
	2	3	4	5
#6	150	225	300	375
#8	212	318	424	530
#10	286	429	572	700
#12	370	555	700	700

LOADS BASED ON GROUP II WOOD SPECIES & SCREWS EMBEDDED IN WOOD A MIN OF 7 TIMES THE SCREW DIA WITH SCREWS INSERTED IN SIDE GRAIN.

TABLE 3

MAXIMUM ALLOWABLE LOAD-IN POUNDS				
SCREW SIZE	QUANTITY OF SCREWS			
	2	3	4	5
#6-S12	224	336	448	560
#8-18	236	354	472	590
#10-16	272	438	584	700
#12-14	288	438	576	700

LOADS BASED ON PUBLISHED DATA FOR MILCOR TITELOCK SCREWS WITH 20 GA GALV STEEL BACKING AND LIMITING CRITERIA BEING PULLOUT STRENGTH

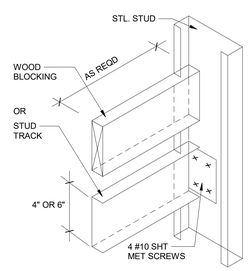

ISOMETRIC DETAIL

3 PARTITION BLOCKING/BACKING
Scale: 1 1/2" = 1'-0"

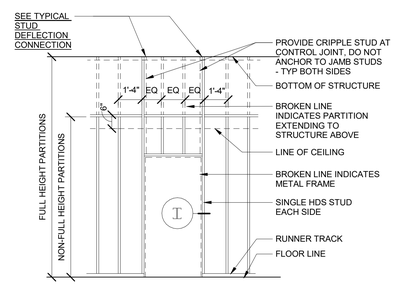

6 DOOR OPENING TYP FRAMING ELEVATION
Scale: 1 1/2" = 1'-0"

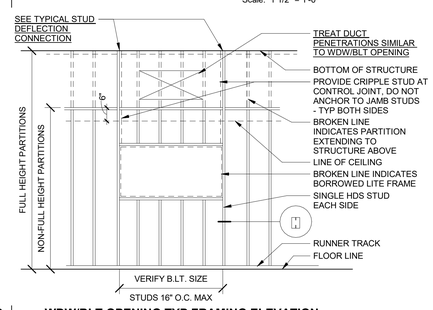

2 WDW/BLT OPENING TYP FRAMING ELEVATION
Scale: 1 1/2" = 1'-0"

GYPSUM BOARD PARTITION CONTROL JOINT NOTES:
1. PROVIDE CONTROL JOINTS WHERE SHOWN ON PLANS
2. PROVIDE CONTROL JOINTS IN UNINTERRUPTED LONG EXPANSES OF GYPSUM BOARD AT 30'-0" OC MAX WITH EACH SIDE OF PARTITION CONSIDERED SEPARATELY
3. WHERE GYPSUM BOARD ON BOTH SIDES EXCEEDS 30'-0", THE GYPSUM BOARD CONTROL JOINTS SHALL BE ALIGNED AS DETAILED BELOW
4. LOCATE GYPSUM BOARD CONTROL JOINTS AT A DOOR OR BORROWED LIGHT JAMB WHEREVER POSSIBLE, OTHERWISE CONSULT ARCHITECT FOR LOCATION OF GYPSUM BOARD CONTROL JOINT.

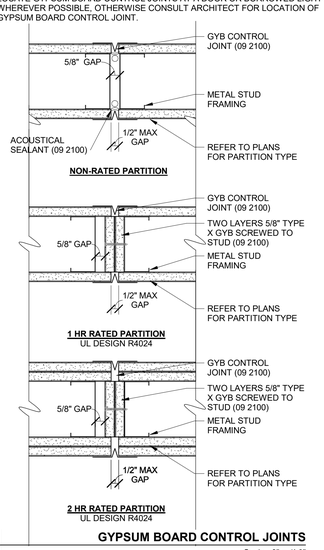

1 GYPSUM BOARD CONTROL JOINTS
Scale: 3" = 1'-0"

The drawing has been prepared for the use of AECOM's client and may not be used, reproduced or relied upon by third parties, except as agreed by AECOM and its client, as required by law or for use by governmental reviewing agencies. AECOM accepts no responsibility, and denies any liability whatsoever, to any party that modifies this drawing without AECOM's express written consent. Do not scale this document. All measurements must be obtained from the stated dimensions.

AECOM

PROJECT
NEW SECURITY FORCES BUILDING
PAYNE BLVD.
CHARLOTTE, NORTH CAROLINA 28208

CLIENT
NORTH CAROLINA AIR NATIONAL GUARD - 145TH AIRLIFT WING
145th AIRLIFT WING
4930 MINUTEMAN WAY
CHARLOTTE, NORTH CAROLINA 28208

ARCHITECT/DESIGNER
AECOM
277 W NATIONWIDE BLVD
COLUMBUS, OH 43215
614-464-4500

http://www.aecom.com

CONSULTANTS

REGISTRATION

KEY PLAN

ISSUE/REVISION

I/R	DATE	DESCRIPTION
	5/30/2025	B-3 SUBMITTAL - FINAL

PROJECT NUMBER
60637899
FJRP229030

SHEET TITLE
PARTITION TYPE SCHEDULE, NOTES AND DETAILS

SHEET NUMBER
A670

©2023 AECOM Corporation

Project Management Initials: MR Designer: Designer Checked: Checker Approved: Approver/ARCH E1 30"x42"
Last Plotted: 5/23/2025 12:13:23 PM
Filename: BM 300-ISP-AMER (USA) 60637899-SFNC-AND1459083799_SF-NC AND_R21_A-1.4
Printed on ___% Post-Consumer Recycled Content Paper

Project Management Initials: MR Designer: Designer Checker: Checker Approved: Approver/ARCH E1 30"x42"

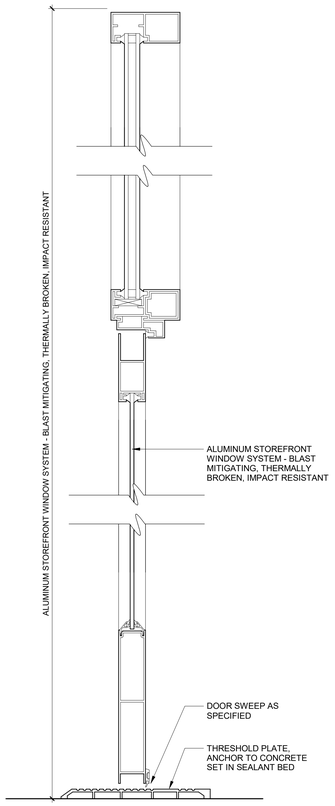

7 HEAD & SILL - EXTERIOR STOREFRONT
Scale: 3" = 1'-0"

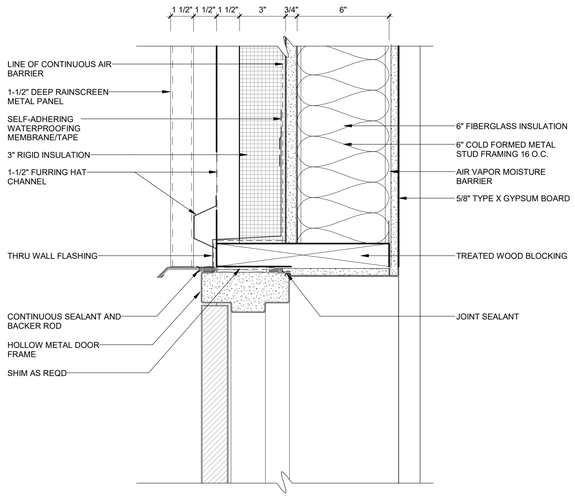

6 HEAD DETAIL - EXTERIOR HOLLOW METAL DOOR (METAL PANEL)
A321 Scale: 3" = 1'-0"

DOOR SCHEDULE

MARK	ROOM NAME	DOOR SIZE W	DOOR SIZE H	DOOR MATERIAL	DOOR TYPE	DOOR GLAZING	FRAME MATERIAL	FRAME TYPE	FRAME DETAIL HEAD	FRAME DETAIL JAMB	FRAME DETAIL SILL	FIRE RATING LABEL	HARDWARE SET	COMMENTS
100A	VEST	6' - 0"	7' - 4 3/4"	ALUM./GLASS	FG2	TEMPERED	ALUM./GLASS		7/A680	8/A680	7/A680		01	
100B	VEST	3' - 0"	7' - 0"	HM	F		HM	1	1/A680	2/A680			02	ELECTRIFIED
101	ID ENTRY	3' - 0"	7' - 0"	ALUM	F		HM	1	1/A680	2/A680			03	ELECTRIFIED
102A	ACTIVE TRAINING	3' - 0"	7' - 0"	WD.	F		HM	1	1/A680	2/A680			04	
102C	TRAINING	3' - 0"	7' - 0"	WD.	F		HM	1	1/A680	2/A680			04	
103	PASS ID	3' - 0"	7' - 0"	WD.	F		HM	1	1/A680	2/A680			05	ELECTRIFIED
104	PPE STO/WEAPONS CLEANING	3' - 0"	7' - 0"	WD.	F		HM	1	1/A680	2/A680			06	
105	ELEC ROOM	3' - 0"	7' - 0"	HM	F		HM	2	3/A680	4/A680			07	ELECTRIFIED
107	MECH ROOM	6' - 0"	7' - 0"	HM	FZ		HM	2	3/A680	4/A680			08	ELECTRIFIED
108A	STAIR	3' - 0"	7' - 2"	HM	F		HM	1	3/A680	4/A680		45 MINUTE	09	ELECTRIFIED
108B	STAIR	3' - 0"	7' - 0"	HM	F		HM	1	1/A680	2/A680		45 MINUTE	10	
109	HOUSE KEEPING	3' - 0"	7' - 0"	WD.	F		HM	1	1/A680	2/A680			11	
110	MENS	3' - 0"	7' - 0"	WD.	F		HM	1	1/A680	2/A680			12	
111	WOMENS	3' - 0"	7' - 0"	WD.	F		HM	1	1/A680	2/A680			12	
112	WEAPONS VAULT	3' - 0"	7' - 0"	HM	F		HM	2	3/A680	4/A680			05	ELECTRIFIED, CLASS 5 VAULT DOOR, S&G 2937 MECHANICAL LOCK
113	LOCKERS	3' - 0"	7' - 0"	HM	F		HM	2	3/A680	4/A680			13	ELECTRIFIED
114	COMMUNICATIONS ROOM	3' - 0"	7' - 0"	WD.	F		HM	1	1/A680	2/A680			05	ELECTRIFIED
115	BDOC	3' - 0"	7' - 0"	WD.	F		HM	1	1/A680	2/A680			05	ELECTRIFIED
115A	UNISEX TOILET	3' - 0"	7' - 0"	WD.	F		HM	1	1/A680	2/A680			16	
200	CONF. ROOM	3' - 0"	7' - 0"	WD.	F		HM	1	1/A680	2/A680			14	
201	COMMANDER	3' - 0"	7' - 0"	WD.	F		HM	1	1/A680	2/A680			15	
202	EXECUTIVE OFFICER	3' - 0"	7' - 0"	WD.	F		HM	1	1/A680	2/A680			15	
203	FIRST SERGEANT	3' - 0"	7' - 0"	WD.	F		HM	1	1/A680	2/A680			15	
204	SECURITY MGR/INVEST S2	3' - 0"	7' - 0"	WD.	F		HM	1	1/A680	2/A680			15	
205	SECURITY FORCES MGR	3' - 0"	7' - 0"	WD.	F		HM	1	1/A680	2/A680			15	
206	UNISEX TOILET	3' - 0"	7' - 0"	WD.	F		HM	1	1/A680	2/A680			16	
208	PRINT/COPY/ ELEV.EQ.RM.	3' - 0"	7' - 0"	WD.	F		HM	1	1/A680	2/A680		45 MINUTE	14	
210A	VEST	3' - 0"	7' - 0"	WD.	F		HM	1	6/A680	5/A680			17	ELECTRIFIED
210B	VEST	3' - 0"	7' - 0"	WD.	F		HM	1	1/A680	2/A680			18	ELECTRIFIED
211	QC/STAN/ EVAL/ TESTING	3' - 0"	7' - 0"	WD.	F		HM	1	1/A680	2/A680			15	
212	STAIR	3' - 0"	7' - 0"	HM	F		HM	1	1/A680	2/A680		45 MINUTE	10	

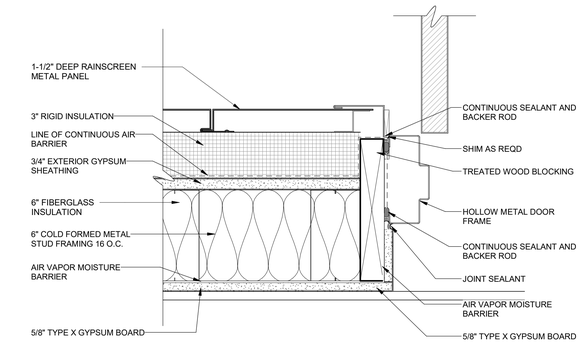

5 JAMB DETAIL - EXTERIOR HOLLOW METAL DOOR (METAL PANEL)
A502 Scale: 3" = 1'-0"

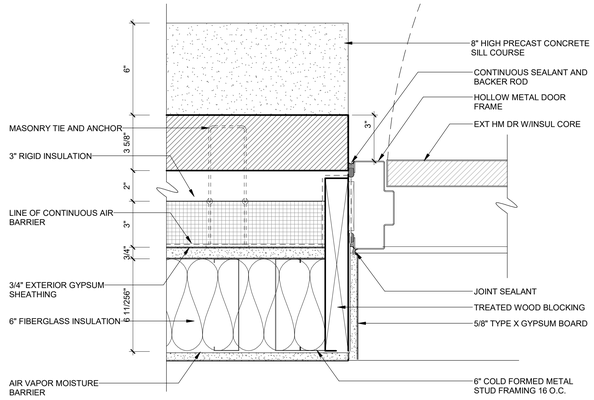

4 JAMB DETAIL - EXTERIOR HOLLOW METAL DOOR (BRICK)
A501 Scale: 3" = 1'-0"

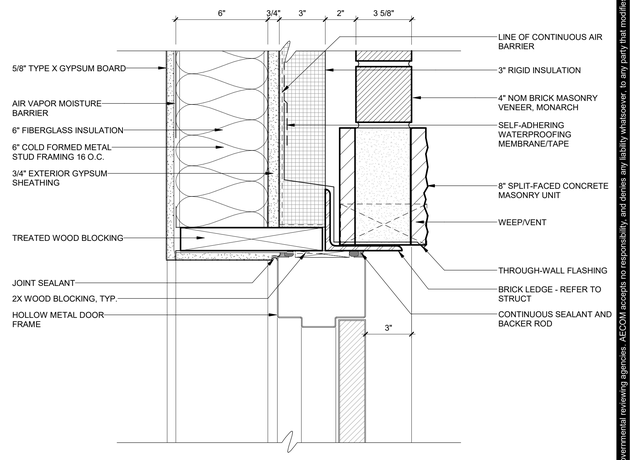

3 HEAD DETAIL - EXTERIOR HOLLOW METAL DOOR (BRICK)
A521 Scale: 3" = 1'-0"

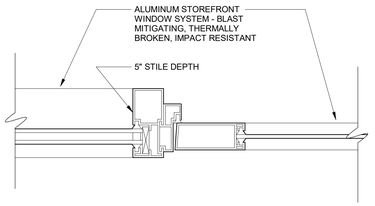

8 JAMB - EXTERIOR STOREFRONT
Scale: 3" = 1'-0"

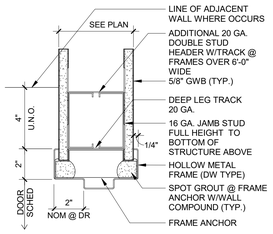

2 JAMB DETAIL - HOLLOW METAL DOOR
Scale: 3" = 1'-0"

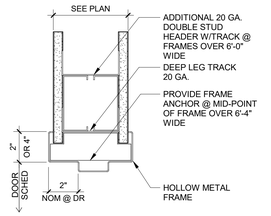

1 HEAD DETAIL - HOLLOW METAL DOOR
Scale: 3" = 1'-0"

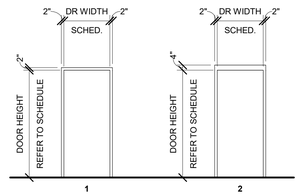

DOOR FRAME LEGEND
Scale: 1/4" = 1'-0"

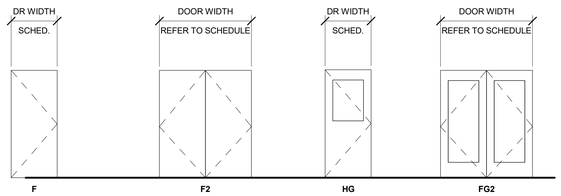

DOOR PANEL LEGEND
Scale: 1/4" = 1'-0"

This drawing has been prepared for the use of AECOM's client and may not be used, reproduced or relied upon by third parties, except as agreed by AECOM and its client, as required by law or for use by governmental reviewing agencies. AECOM accepts no responsibility, and denies any liability whatsoever, to any party that modifies this drawing without AECOM's express written consent. Do not scale this document. All measurements must be obtained from the stated dimensions.

AECOM

PROJECT
NEW SECURITY FORCES BUILDING
PAYNE BLVD.
CHARLOTTE, NORTH CAROLINA 28208

CLIENT
NORTH CAROLINA AIR NATIONAL GUARD - 145TH AIRLIFT WING
145th AIRLIFT WING
4930 MINUTEMAN WAY
CHARLOTTE, NORTH CAROLINA 28208

ARCHITECT/DESIGNER
AECOM
277 W NATIONWIDE BLVD
COLUMBUS, OH 43215
614-464-4500

http://www.aecom.com

CONSULTANTS

REGISTRATION

KEY PLAN

ISSUE/REVISION

I/R	DATE	DESCRIPTION
	5/30/2025	B-3 SUBMITTAL - FINAL

PROJECT NUMBER
60637899
FJRP229030

SHEET TITLE
DOOR SCHEDULE

SHEET NUMBER
A680

Last Plotted: 5/23/2025 12:13:24 PM
Filename: BIM 360/BP-NAEDY(USA) (60637899-SPNCANG145th60637899_SF-NC ANG_R21_A.rvt
Printed on ___% Post-Consumer Recycled Content Paper
©2023 AECOM Corporation

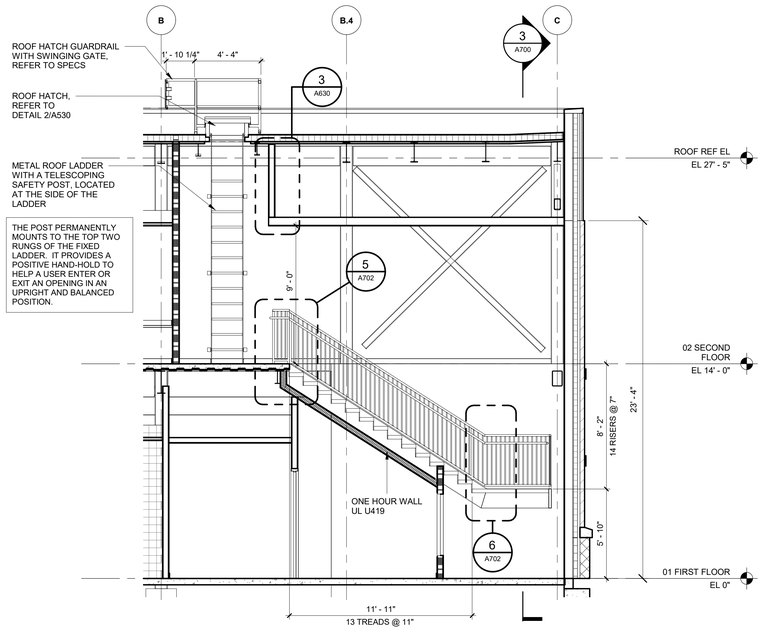

4 A201 **SECTION @ STAIR**
Scale: 1/4" = 1'-0"

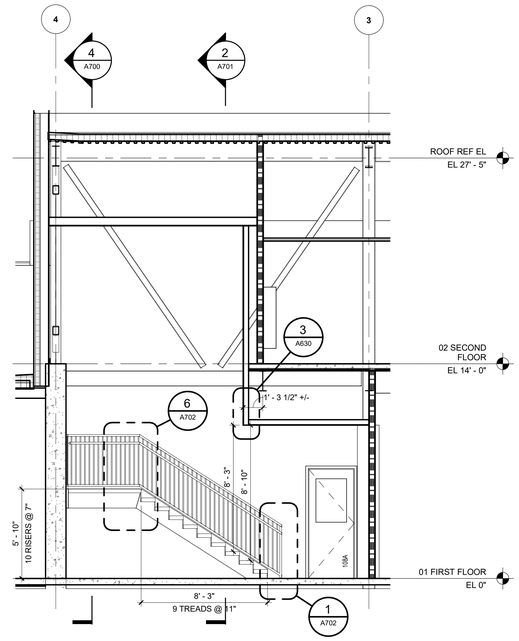

3 A300 **SECTION @ STAIR**
Scale: 1/4" = 1'-0"

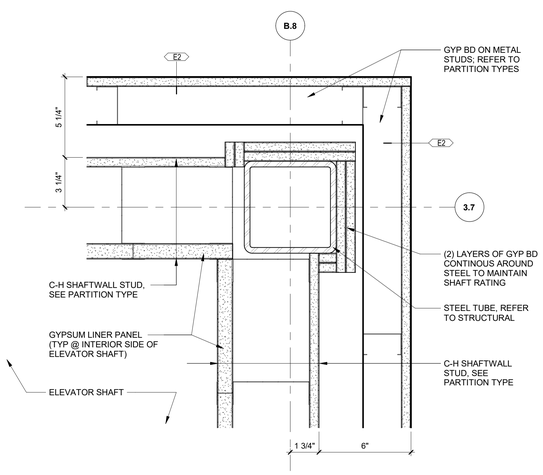

5 A700 **PLAN DETAIL AT STAIR**
Scale: 3" = 1'-0"

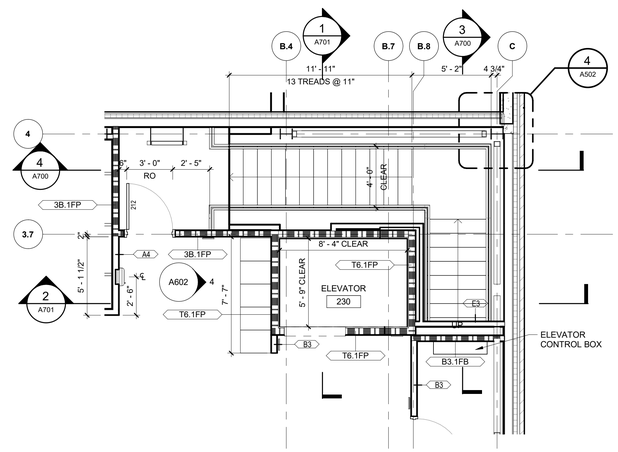

2 A102 **SECOND FLOOR PLAN - STAIR**
Scale: 1/4" = 1'-0"

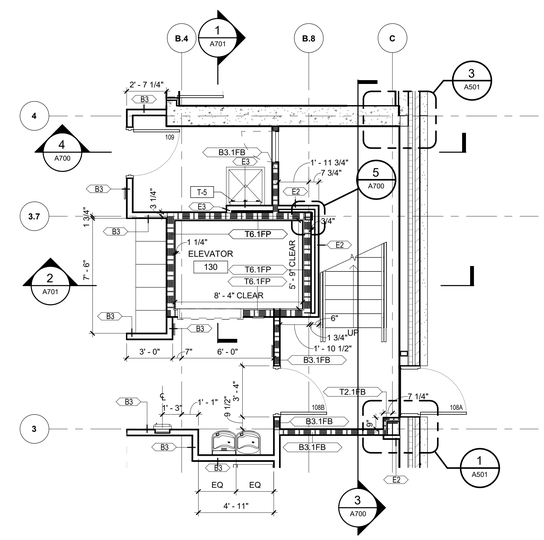

1 A101 **FIRST FLOOR PLAN - STAIR 108**
Scale: 1/4" = 1'-0"

Project Management Initials: MR Designer: Designer Checkset: Checker Approved: Approver/ARCH E1 30"X42"

Last Plotted: 5/23/2025 12:13:25 PM
Filename: BM.36P-BP-ABER (USA) 60637899-SFNC/AND/1459037899_SF-NC AND_R21_A-n1

Printed on ___% Post-Consumer Recycled Content Paper

The drawing has been prepared for the use of AECOM's client and may not be used, reproduced or relied upon by third parties, except as agreed by AECOM and its client, as required by law or for use by governmental reviewing agencies. AECOM accepts no responsibility, and denies any liability whatsoever, to any party that modifies this drawing without AECOM's express written consent. Do not scale this document. All measurements must be obtained from the stated dimensions.

AECOM

PROJECT

NEW SECURITY FORCES BUILDING

PAYNE BLVD.
CHARLOTTE, NORTH CAROLINA 28208

CLIENT

NORTH CAROLINA AIR NATIONAL GUARD - 145TH AIRLIFT WING

145th AIRLIFT WING
4930 MINUTEMAN WAY
CHARLOTTE, NORTH CAROLINA 28208

ARCHITECT/DESIGNER

AECOM

277 W NATIONWIDE BLVD
COLUMBUS, OH 43215
614-464-4500

http://www.aecom.com

CONSULTANTS

REGISTRATION

STATE OF OHIO
MARTY SIEESE
1817301
REGISTERED ARCHITECT
5/30/2025

KEY PLAN

ISSUE/REVISION

I/R	DATE	DESCRIPTION
	5/30/2025	B-3 SUBMITTAL - FINAL

PROJECT NUMBER

60637899
FJRP229030

SHEET TITLE

ENLARGED STAIR PLANS AND SECTIONS - STAIR 01

SHEET NUMBER

A700

©2023 AECOM Corporation

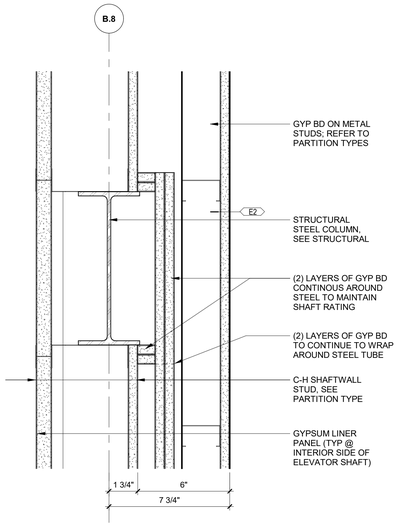

8 DETAIL AT ELEVATOR WALL & BEAM
A701 Scale: 3" = 1'-0"

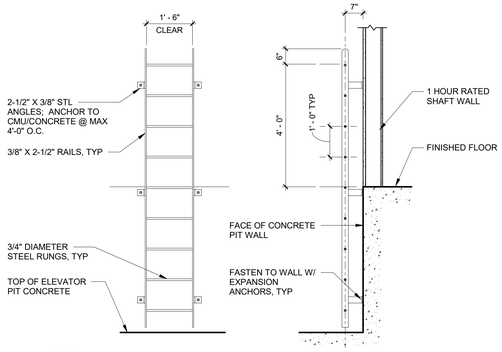

NOTES:
1. COORDINATE FINAL LADDER MOUNTING LOCATION WITH ELEVATOR MANUFACTURER.
2. COMPLY WITH APPLICABLE REQUIREMENTS IN THE ELEVATOR AND BUILDING CODE.
3. ALL STEEL SHALL BE GALVANIZED

7 ELEVATOR PIT LADDER
A701 Scale: 1/2" = 1'-0"

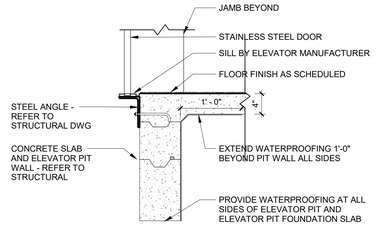

6 ELEVATOR SILL DTL
A701 Scale: 1" = 1'-0"

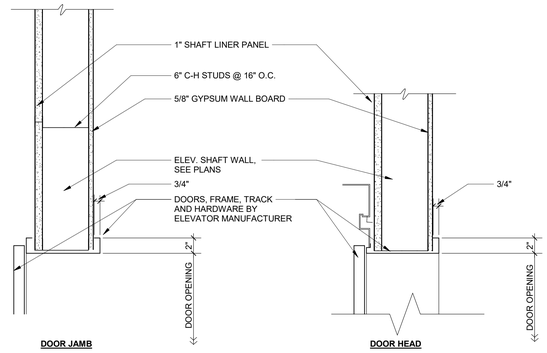

5 ELEVATOR HEAD AND JAMB-2ND FLR
A701 Scale: 1 1/2" = 1'-0"

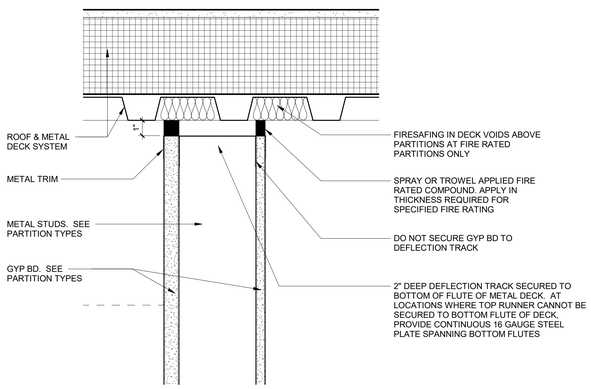

4 SECTION DETAIL AT RATED PARTITION TO DECK
A701 Scale: 3" = 1'-0"

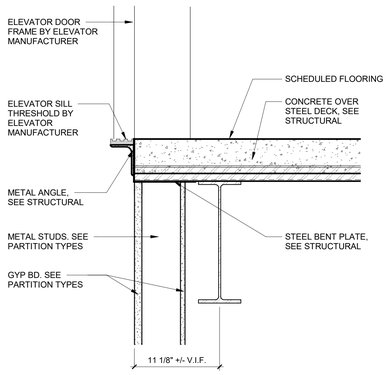

3 SECTION DETAIL
A701 Scale: 1 1/2" = 1'-0"

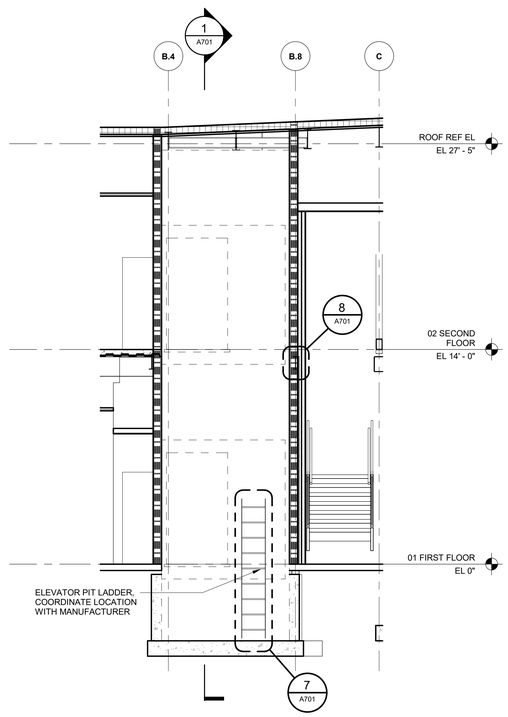

2 SECTION @ ELEVATOR
A201 Scale: 1/4" = 1'-0"

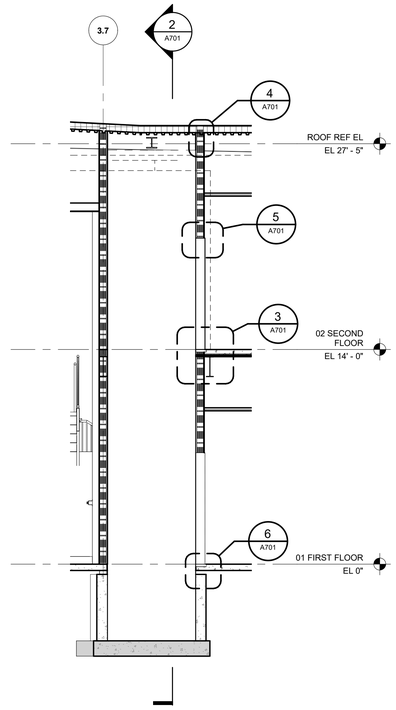

1 SECTION @ ELEVATOR
A101 Scale: 1/4" = 1'-0"

AECOM

PROJECT
NEW SECURITY FORCES BUILDING
PAYNE BLVD.
CHARLOTTE, NORTH CAROLINA 28208

CLIENT
NORTH CAROLINA AIR NATIONAL GUARD - 145TH AIRLIFT WING
145th AIRLIFT WING
4930 MINUTEMAN WAY
CHARLOTTE, NORTH CAROLINA 28208

ARCHITECT/DESIGNER
AECOM
277 W NATIONWIDE BLVD
COLUMBUS, OH 43215
614-464-4500

http://www.aecom.com

CONSULTANTS

REGISTRATION

STATE OF OHIO
MARTY SIEESE
1817301
REGISTERED ARCHITECT
5/30/2025

KEY PLAN

ISSUE/REVISION

I/R	DATE	DESCRIPTION
	5/30/2025	B-3 SUBMITTAL - FINAL

PROJECT NUMBER
60637899
FJRP229030

SHEET TITLE
ENLARGED ELEVATOR PLANS WALL SECTIONS - ELEV 01

SHEET NUMBER
A701

The drawing has been prepared for the use of AECOM's client and may not be used, reproduced or relied upon by third parties, except as agreed by AECOM and its client, as required by law or for use by governmental reviewing agencies. AECOM accepts no responsibility, and denies any liability whatsoever, to any party that modifies this drawing without AECOM's express written consent. Do not scale this document. All measurements must be obtained from the stated dimensions.

©2023 AECOM Corporation

Project Management Initials: MR Designer: Designer Checker: Checker Approved: Approver/RCH E1 30"x42"
Last Plotted: 5/23/2025 12:13:26 PM
Filename: BM 360-SP-ABER (USA) (60637899-SFNCANG145thW37899_SF-NC ANG_R21_A.rvt
Printed on ___% Post-Consumer Recycled Content Paper

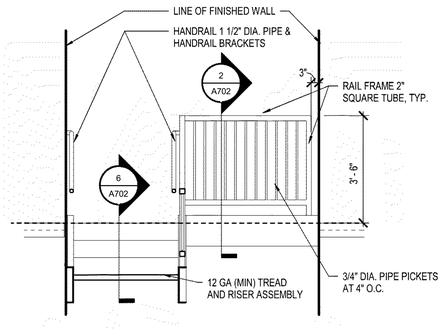

11 TYPICAL GUARDRAIL ELEVATION DETAIL
Scale: 1/2" = 1'-0"

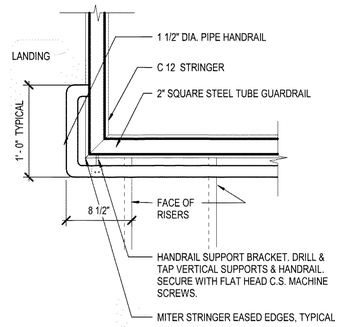

10 PLAN DETAIL AT HANDRAIL / GUARDRAIL
Scale: 1 1/2" = 1'-0"

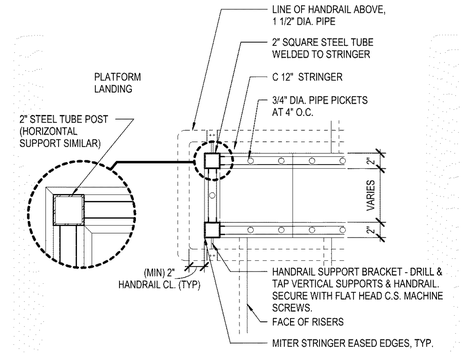

9 TYPICAL STRINGER / HANDRAIL AT LANDING DETAIL
Scale: 1 1/2" = 1'-0"

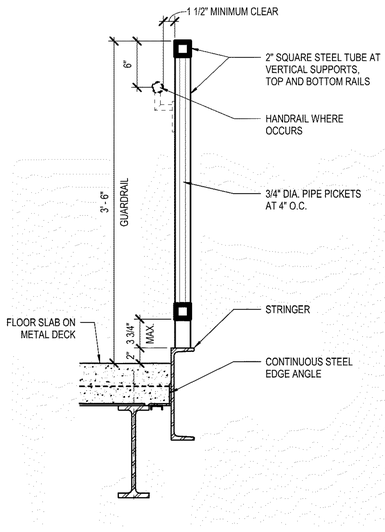

8 SECTION AT GUARDRAIL
Scale: 1 1/2" = 1'-0"

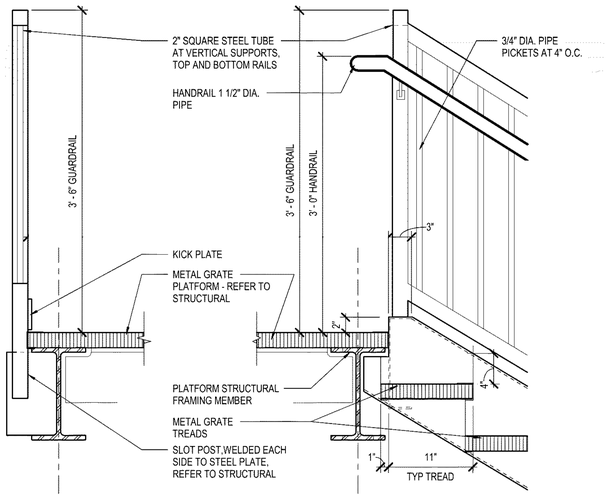

7 METAL GRATE TREAD / RISER DETAIL AT UPPER LEVEL
Scale: 1 1/2" = 1'-0"

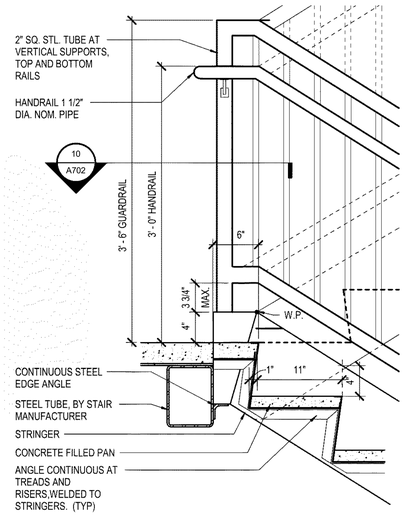

6 TYPICAL TREAD / RISER DETAIL AT LANDING
A700 Scale: 1 1/2" = 1'-0"

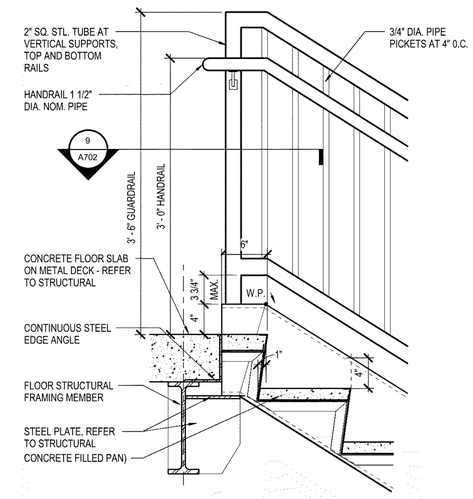

5 TYPICAL TREAD / RISER DETAIL AT UPPER LEVEL
A700 Scale: 1 1/2" = 1'-0"

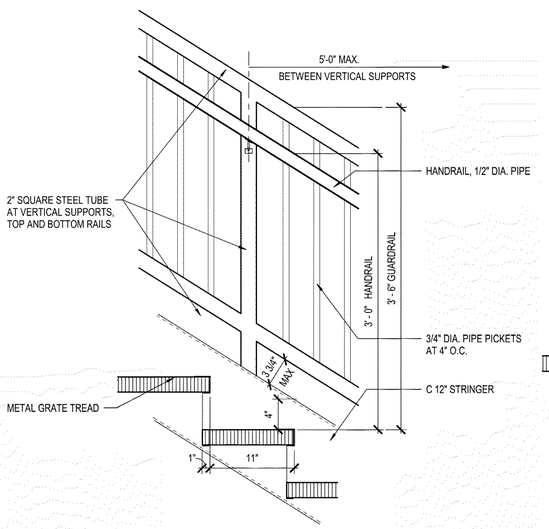

4 METAL GRATE TREAD / RISER W/INTERMEDIATE POST
Scale: 1 1/2" = 1'-0"

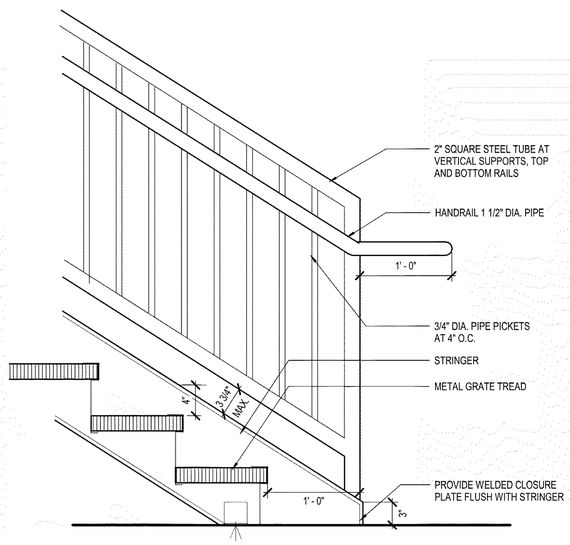

3 METAL GRATE TREAD / RISER DETAIL AT FLOOR
Scale: 1 1/2" = 1'-0"

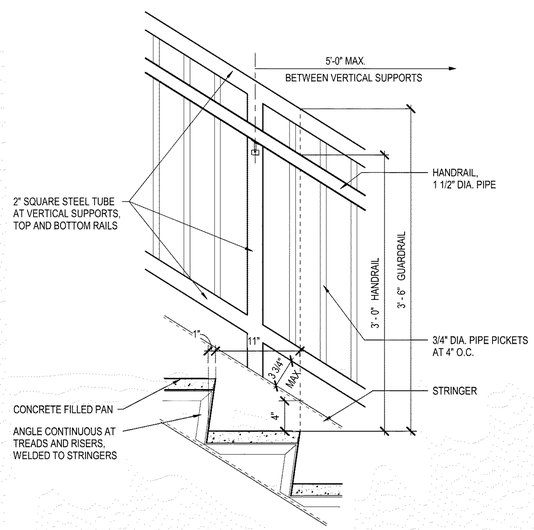

2 TYPICAL TREAD / RISER WITH INTERMEDIATE POST
Scale: 1 1/2" = 1'-0"

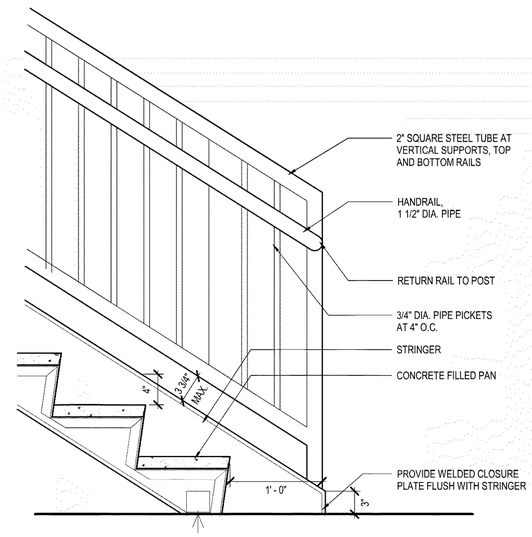

1 TYPICAL TREAD / RISER DETAIL AT FLOOR
A700 Scale: 1 1/2" = 1'-0"

AECOM

PROJECT
NEW SECURITY FORCES BUILDING
PAYNE BLVD.
CHARLOTTE, NORTH CAROLINA 28208

CLIENT
NORTH CAROLINA AIR NATIONAL GUARD - 145TH AIRLIFT WING
145th AIRLIFT WING
4930 MINUTEMAN WAY
CHARLOTTE, NORTH CAROLINA 28208

ARCHITECT/DESIGNER
AECOM
277 W NATIONWIDE BLVD
COLUMBUS, OH 43215
614-464-4500

http://www.aecom.com
CONSULTANTS

REGISTRATION
STATE OF OHIO
MARTY SIEBE
1817301
REGISTERED ARCHITECT
5/30/2025

KEY PLAN

ISSUE/REVISION

I/R	DATE	DESCRIPTION
	5/30/2025	B-3 SUBMITTAL - FINAL

PROJECT NUMBER
60637899
FJRP229030

SHEET TITLE
TYPICAL STAIR DETAILS

SHEET NUMBER
A702

This drawing has been prepared for the use of AECOM's client and may not be used, reproduced or relied upon by third parties, except as agreed by AECOM and its client, as required by law or for use by governmental reviewing agencies. AECOM accepts no responsibility, and denies any liability whatsoever, to any party that modifies this drawing without AECOM's express written consent. Do not scale this document. All measurements must be obtained from the stated dimensions.

©2023 AECOM Corporation

Project Management Initials: MR Designer: Designer Checker: Checker Approved: Approver ARCH E1 30"x42"
Last Plotted: 5/23/2025 12:13:27 PM
Filename: BIM 360:0BP-AMER1 (USA) 60637899-SFNC-AND 1459063739_SF-NC AND_R21_A.rvt
Printed on:____% Post-Consumer Recycled Content Paper

FINISH SELECTIONS

MATERIAL CODE	MATERIAL TYPE	MANUFACTURER	STYLE	MODEL NUMBER/ COLOR	ADDITIONAL NOTES	FINISH TYPE
ACOUSTICAL CEILING PANEL						
ACT1	ACOUSTICAL CEILING PANEL	ARMSTRONG	CIRRUS HUMIGUARD	584, 24" X 24" X 3/4" WHITE	ANGLED TEGULAR, 15/16" GRID	CEILING
ACT2	ACOUSTICAL CEILING PANEL	ARMSTRONG	METALWORKS VECTOR	6466, 24" X 24" X 3/4" SILVER GREY	MICROPERFORATED (M2) ANGLED TEGULAR, 15/16" GRID	CEILING
CARPET TILE						
CPT3	CARPET TILE	PATCRAFT	INTRINSIC Z6474	BLUE SKY THINKING 00445	SIZE: 24" X 24" INSTALLATION: QUARTER TURN	FLOOR
CORNER GUARD						
CG1	CORNER GUARD	INPRO	SURFACE MOUNT	MONSOON 0378		WALL PROTECTION
LAMINATE						
PL1	LAMINATE	PIONITE	HPL TEXTURED	AG611-SD, GRAVEYARD OF THE ATLANTIC		MISCELLANEOUS FINISHES
PAINT						
PT4	PAINT	BENJAMIN MOORE	EGGSHELL	GREENWICH GATE CSP-170		WALL
PT5	PAINT	BENJAMIN MOORE	SEMI-GLOSS	KENDALL CHARCOAL HC-166		TRIM
PT6	PAINT	BENJAMIN MOORE	EGGSHELL	SIMPLY WHITE OC-117		CEILING
PT7	PAINT	SHERWIN WILLIAMS	EGGSHELL	LOYAL BLUE SW 6510		WALL
RESILIENT BASE						
RB1	RESILIENT BASE	ROPPE	RUBBER WALL BASE	DARK GRAY 150	4" H COVE STYLE	BASE
RESILIENT TILE						
LT1	RESILIENT TILE	FORBO	MARMOLEUM - MCT	EIGER 629	13" X 13"	FLOOR
SEALED CONCRETE						
SCONC	SEALED CONCRETE					FLOOR
SOLID SURFACE MATERIAL						
SSM1	SOLID SURFACE MATERIAL	WILSONART		WHITE STONE		MISCELLANEOUS FINISHES
TILE						
CT2	TILE	DALTILE	COLORWHEEL CLASSIC	DESERT GREY X114	6" X 6" X 1/8", GROUT: ISC SILVERADO 949	WALL
CT4	TILE	CROSSVILLE	CROSS-COLORS MINGLES PORCELAIN STONE	GRAPHITE A850	12" X 12" X 5/16", GROUT: ISC LIGHT PEWTER 927	FLOOR
CT6	TILE	CROSSVILLE	MAIN STREET PORCELAIN STONE	BOUTIQUE BLACK AV215	2" X 2" X 5/16", GROUT: ISC LIGHT PEWTER 927	FLOOR
TILE BASE						
TB1	TILE BASE	CROSSVILLE	MAIN STREET PORCELAIN STONE	GALLERY GREY AV214	6" X 12" X 3/8", GROUT: ISC LIGHT PEWTER 927	BASE
WALL PROTECTION						
FRP1	WALL PROTECTION	INPRO	PALLADIUM RIGID SHEET	MONSOON 0378	8' HIGH, 0.040" THICK, PROVIDE TOP & END CAPS TO MATCH.	WALL PROTECTION

ROOM FINISH SCHEDULE

ROOM NO.	ROOM NAME	INTERIOR FINISHES						REMARKS
		FLOOR	BASE	WALL				
				NORTH	EAST	SOUTH	WEST	
01 FIRST FLOOR								
100	VEST	LT1	RB1	PT7	PT4	PT4	PT4	
101	ID ENTRY	LT1	RB1	PT4	PT7	PT4	DWP1	
102A	ACTIVE TRAINING	CPT1	RB1	PT4	PT4	PT4	PT4	
102B	TRAINING	CPT1	RB1	PT4	PT4	PT4	PT4	
103	PASS ID	CPT1	RB1	PT4	PT4	PT4	PT4	
104	PPE STO/WEAPONS CLEANING	SCONC	RB1	PT4	PT4	PT4	PT4	
105	ELEC ROOM	SCONC	RB1	PT4	PT4	PT4	PT4	
106	BREAK	LT1	RB1	PT4	PT4	PT4	PT4	CASEWORK: PL1/COUNTER: SSM1
107	MECH ROOM	SCONC	RB1	PT4	PT4	PT4	PT4	
108	STAIR	SCONC	RB1	PT4	PT4	PT4	PT4	
109	HOUSE KEEPING	SCONC	RB1	PT4	PT4	PT4	PT4	
110	MENS	CT4/CT6	TB1	CT2	CT2	CT2	CT2	CT6 SHOWER FLOOR ONLY
111	WOMENS	CT4/CT6	TB1	CT2	CT2	CT2	CT2	CT6 SHOWER FLOOR ONLY
112	WEAPONS VAULT	LT1	RB1	PT4	PT4	PT4	PT4	
113	LOCKERS	LT1	RB1	PT4	PT4	PT4	PT4	
114	COMMUNICATIONS ROOM	SCONC	RB1	PT4	PT4	PT4	PT4	
115	BDOC	CPT1	RB1	PT4	PT4	PT4	PT4	COUNTER: PL1
115A	UNISEX TOILET	CT4	TB1	PT4	CT2	CT2	PT4	
116	CORR	LT1	RB1	PT4	PT4	PT4	PT4	
130	ELEVATOR	LT1						FOR BASE & WALLS REFER TO SPEC
02 SECOND FLOOR								
200	CONF. ROOM	CPT1	RB1	DWP1	PT4	PT4	PT7	
201	COMMANDER	CPT1	RB1	PT4	PT4	PT4	PT4	
202	EXECUTIVE OFFICER	CPT1	RB1	PT4	PT4	PT4	PT4	
203	FIRST SERGEANT	CPT1	RB1	PT4	PT4	PT4	PT4	
204	SECURITY MGR/INVEST S2	CPT1	RB1	PT4	PT4	PT4	PT4	
205	SECURITY FORCES MGR	CPT1	RB1	PT4	PT4	PT4	PT4	
206	UNISEX TOILET	CT4	TB1	PT4	CT2	CT2	PT4	
207	COFFEE	LT1	RB1	PT4	PT4	PT4	PT4	CASEWORK: PL1/COUNTER: SSM1
208	PRINT/COPY/ ELEV.EQ.RM.	LT1	RB1	PT4	PT4	PT4	PT4	
209	FLIGHT CHIEFS	CPT1	RB1	PT4	PT4	PT4	PT4	COUNTER: PL1
210	VEST	LT1	RB1	PT4	PT4	PT4	PT4	
211	QC/STAN/ EVAL/ TESTING	CPT1	RB1	PT4	PT4	PT4	PT4	COUNTER: PL1
212	STAIR	SCONC	RB1	PT4	PT4	PT4	PT4	
213	COMMANDER SUPPORT STAFF	CPT1	RB1	PT4	PT4	PT4	PT4	
214	HOTELING STATIONS	CPT1	RB1	PT4	PT4	PT4	PT4	
215	HOTELING STATIONS	CPT1	RB1	PT4	PT4	PT4	PT4	
216	SUPPLY MOBILITY MANAGEMENT	CPT1	RB1	PT4	PT4	PT4	PT4	
217	OPERATIONS SUPERVISOR	CPT1	RB1	PT4	PT4	PT4	PT4	
218	S5	CPT1	RB1	PT4	PT4	PT4	PT4	
219	HOTELING STATION	CPT1	RB1	PT4	PT4	PT4	PT4	
220	TRAINING MANAGER	CPT1	RB1	PT4	PT4	PT4	PT4	
221	PROGRAM MANAGER	CPT1	RB1	PT4	PT4	PT4	PT4	
222	CORR	CPT1	RB1	PT4	PT4	PT4	PT4	
230	ELEVATOR	LT1						FOR BASE & WALLS REFER TO SPEC

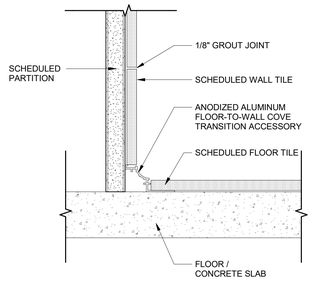

3 **TOILET ROOM FLOOR - TO - WALL TILE TRANSITION**
A601 Scale: 6" = 1'-0"

LEGEND

XX ← FINISH TAG

DASHED LINE INDICATES EXTENT OF WALL TILE, CT-2

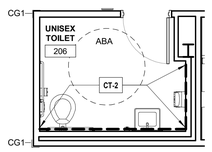

2 **PARTIAL SECOND FLR FINISH PLAN - UNISEX TOILET**
Scale: 1/4" = 1'-0"

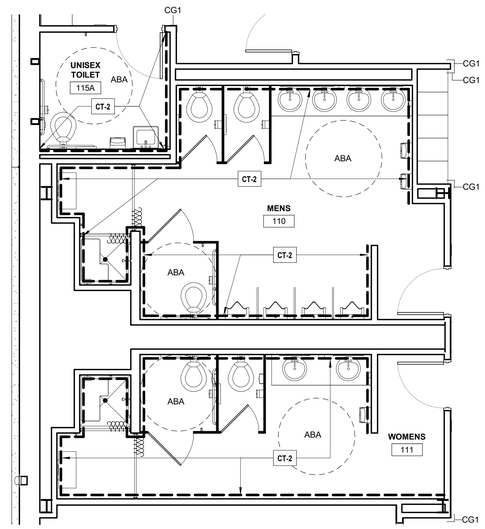

1 **PARTIAL FIRST FLR FINISH PLAN - TOILETS**
Scale: 1/4" = 1'-0"

AECOM

PROJECT
NEW SECURITY FORCES BUILDING
PAYNE BLVD.
CHARLOTTE, NORTH CAROLINA 28208

CLIENT
NORTH CAROLINA AIR NATIONAL GUARD - 145TH AIRLIFT WING
145th AIRLIFT WING
4930 MINUTEMAN WAY
CHARLOTTE, NORTH CAROLINA 28208

ARCHITECT/DESIGNER
AECOM
277 W NATIONWIDE BLVD
COLUMBUS, OH 43215
614-464-4500

http://www.aecom.com

CONSULTANTS

REGISTRATION

STATE OF OHIO
MARTY SIESE
1817301
REGISTERED ARCHITECT
5/30/2025

KEY PLAN

4 3 2 1 0 4 8
SCALE: 1/4"=1'-0"

ISSUE/REVISION

I/R	DATE	DESCRIPTION
	5/30/2025	B-3 SUBMITTAL - FINAL

PROJECT NUMBER
60637899
FJRP229030

SHEET TITLE
FINISH LEGENDS AND SCHEDULES

SHEET NUMBER
A800

The drawing has been prepared for the use of AECOM's client and may not be used, reproduced or relied upon by third parties, except as agreed by AECOM and its client, as required by law or for use by governmental reviewing agencies. AECOM accepts no responsibility, and denies any liability whatsoever, to any party that modifies this drawing without AECOM's express written consent. Do not scale this document. All measurements must be obtained from the stated dimensions.

Project Management Initials: MR Designer: Designer Checker: Checker Approved: Approver/RCH E1 30"x42"
Last Plotted: 5/23/2025 12:13:29 PM
Filename: BIM 360:/SR-AMER-USA (60637899-SFNCANG145thWSTB99_SF-NC ANG_R21_A.rvt
Printed on ____% Post-Consumer Recycled Content Paper

©2023 AECOM Corporation

Project Management Initials: MR Designer: Designer Checker: Checker Approved: Approver/ARCH E1 30"x42"

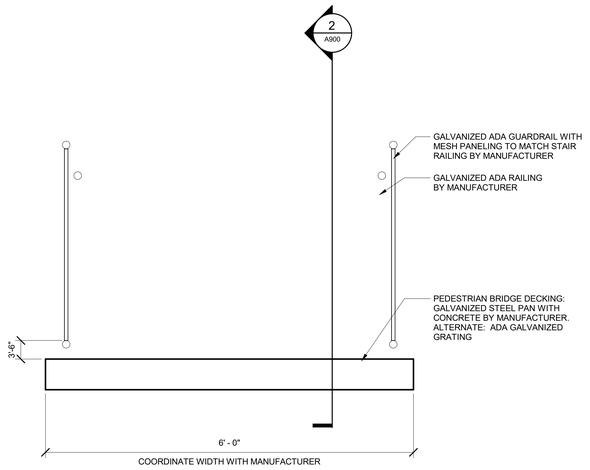

3 A900 **SECTION AT PEDESTRIAN BRIDGE**
Scale: 1" = 1'-0"

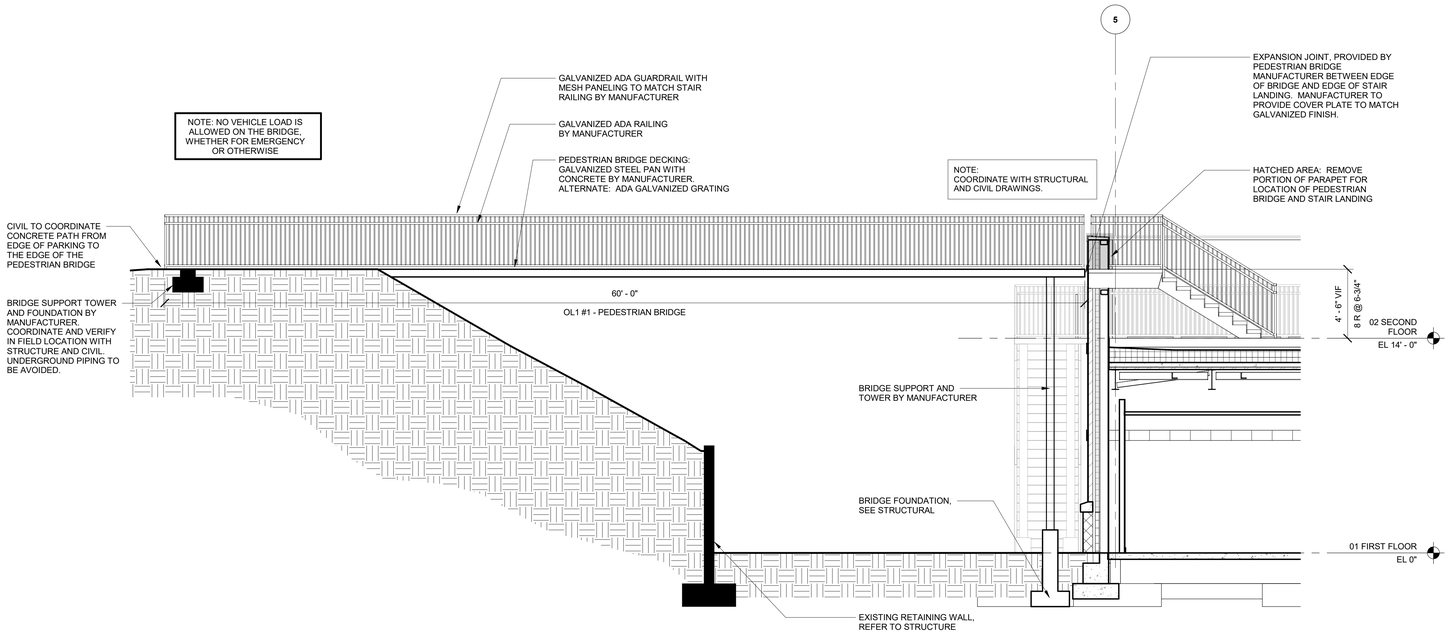

2 A900 **SECTION AT PEDESTRIAN BRIDGE AND STAIRS**
Scale: 1/4" = 1'-0"

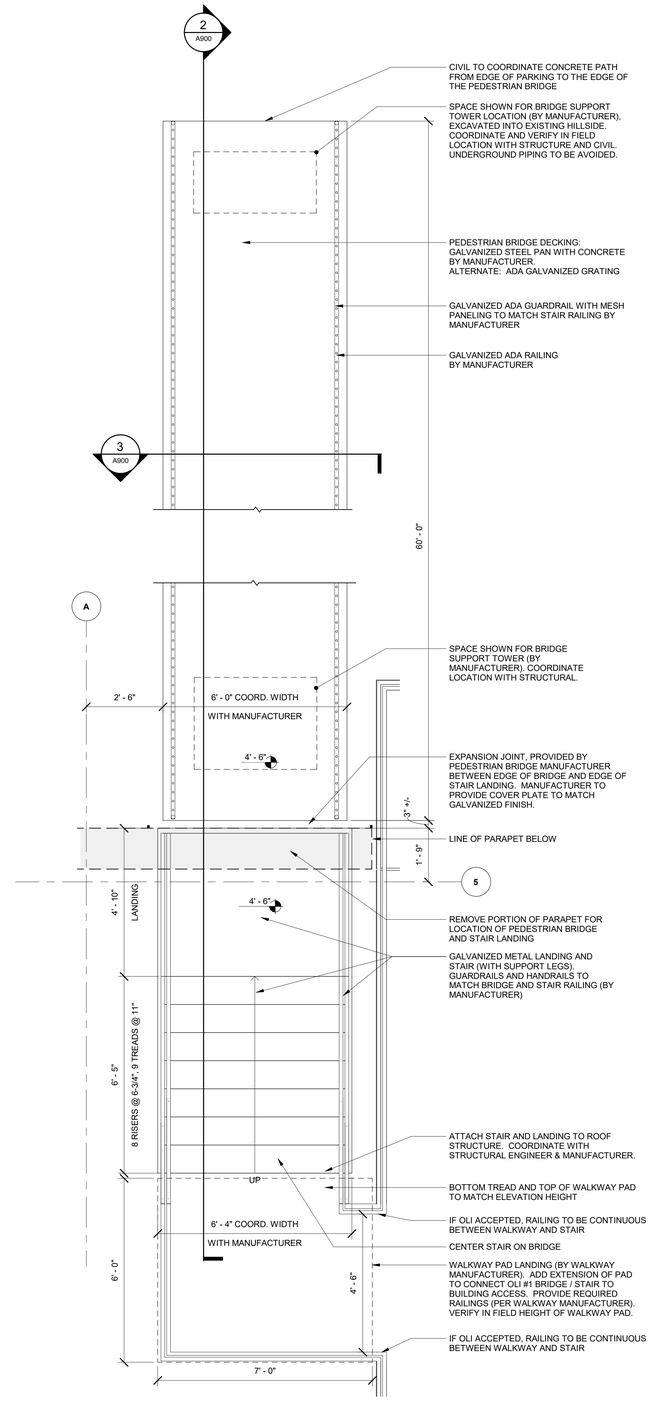

1 A102 **ENLARGED PLAN AT PEDESTRIAN BRIDGE AND STAIRS**
Scale: 1/2" = 1'-0"

N

This drawing has been prepared for the use of AECOM's client and may not be used, reproduced or relied upon by third parties, except as agreed by AECOM and its client, as required by law or for use by governmental reviewing agencies. AECOM accepts no responsibility, and denies any liability whatsoever, to any party that modifies this drawing without AECOM's express written consent. Do not scale this document. All measurements must be obtained from the stated dimensions.

AECOM

PROJECT
NEW SECURITY FORCES BUILDING
PAYNE BLVD.
CHARLOTTE, NORTH CAROLINA 28208

CLIENT
NORTH CAROLINA AIR NATIONAL GUARD - 145TH AIRLIFT WING
145th AIRLIFT WING
4930 MINUTEMAN WAY
CHARLOTTE, NORTH CAROLINA 28208

ARCHITECT/DESIGNER
AECOM
277 W NATIONWIDE BLVD
COLUMBUS, OH 43215
614-464-4500

http://www.aecom.com

CONSULTANTS

REGISTRATION

STATE OF OHIO
MARTY SIEBSE
1817301
REGISTERED ARCHITECT
5/30/2025

KEY PLAN

ISSUE/REVISION

I/R	DATE	DESCRIPTION
	5/30/2025	B-3 SUBMITTAL - FINAL

PROJECT NUMBER
60637899
FJRP229030

SHEET TITLE
OLI #1 - PEDESTRIAN BRIDGE

SHEET NUMBER
A900

©2023 AECOM Corporation

Printed on ___% Post-Consumer Recycled Content Paper

Last Plotted: 5/30/2025 12:13:31 PM
Filename: BM 060-ISP-RMEPL(USA) 60637899-SFNCANG145/60637899_SF-NC-ANG_R21_A-H

FIRE ALARM / MASS NOTIFICATION LEGEND

FAA	FIRE ALARM REMOTE ANNUNCIATOR PANEL
BATT	SECONDARY POWER SUPPLY (BATTERY)
DACT	DACT TRANSMITTER
AMP	AMPLIFIER
FTR	FIRE ALARM TRANSMITTER
FAMN	COMBINED FIRE ALARM/MASS NOTIFCATION PANEL
FCV	FLOOR CONTROL VALVE
LOC	LOCAL OPERATING CONSOLE
P	MANUAL FIRE ALARM PULL STATION
NAC	NOTIFICATION APPLIANCE CIRCUIT BOOSTER POWER SUPPLY
	MAGNETIC DOOR HOLDER
	WALL MOUNTED SPEAKER STROBE - CANDELA SUPERSCRIPT
	CEILING MOUNTED SPEAKER STROBE - CANDELA SUPERSCRIPT
	WALL MOUNTED SPEAKER
	CEILING MOUNTED SPEAKER
PS	PRESSURE SWITCH
RTS	REMOTE TEST SYSTEM
TS	TAMPER SWTICH
SS	TRANSIENT VOLT SURGE SUPPRESSOR
FS	WATER FLOW SWITCH
	MAGNETIC DOOR HOLDER
	FIRE ALARM BELL
	HEAT DETECTOR
	SMOKE DETECTOR
	DUCT SMOKE DETECTOR
E	SMOKE DETECTOR ELEVATOR RECALL
AOM	ADDRESSABLE OUTPUT MODULE
AIM	ADDRESSABLE INPUT MODULE
LED	MASS NOTIFICATION LED TEXT SIGN

APPLICABLE CODES

UNLESS OTHERWISE INDICATED OR SPECIFIED, PERFORM THE WORK IN CONFORMANCE WITH THE LATEST EDITIONS OF ALL APPLICABLE REGULATORY REQUIREMENTS, INCLUDING, BUT NOT LIMITED TO, THE FOLLOWING:

UFC 03-600-01, FIRE PROTECTION ENGINEERING FOR FACILITIES, 2016, CHANGE 6 MAY 6, 2021
UFC 04-021-01, DESIGN AND O&M MASS NOTIFICATION SYSTEMS, 2008, CHANGE 1 JANUARY 2010
NFPA 72, NATIONAL FIRE ALARM CODE, 2022 EDITION
NFPA 70, NATIONAL ELECTRIC CODE, 2020 EDITION

DETAIL/SECTION TITLE

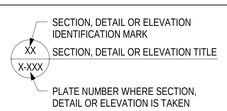

DETAIL CALLOUT SYMBOL

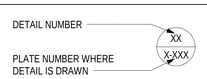

SECTION CUT SYMBOL

FA/MN ABBREVIATIONS

AC	ALTERNATING CURRENT
ACU	AUTONOMOUS CONTROL UNIT
AFF	ABOVE FINISHED FLOOR
AHJ	AUTHORITY HAVING JURISDICTION
AWG	AMERICAN WIRE GAGE
CA	CLEAN AGENT
CD	CANDELA
CFM	CUBIC FEET PER MINUTE
DBA	DECIBEL A-WEIGHTED
FA	FIRE ALARM
FAMN	COMBINED FIRE ALARM AND MASS NOTIFICATION PANEL
FX	FIRE SUPPRESSION
HZ	HERTZ
IAW	IN ACCORDANCE WITH
IDC	INITIATING DEVICE CIRCUIT
MNS	MASS NOTIFICATION SYSTEM
NAC	NOTIFICATION APPLIANCE CIRCUIT
NEC	NATIONAL ELECTRICAL CODE
NC	NORMALLY CLOSED
NO	NORMALLY OPEN
NEMA	NATIONAL ELECTRICAL MANUFACTURERS ASSOCIATION
PA	PUBLIC ADDRESS
SPD	SURGE PROTECTION DEVICE
SLC	SIGNALING LINE CIRCUIT
SNAC	SUPPLEMENTARY NOTIFICATION APPLIANCE CIRCUIT
TYP	TYPICAL
UL	UNDERWRITERS LABORATORIES
WP	WEATHER AND DIRECT HOSE STREAM PROOF (NEMA 4)

FA/MN DESIGN CRITERIA

1. AUDIBLE NOTIFICATION MUST BE PROVIDED FOR ALL AREAS AND ROOMS THROUGHOUT THE FACILITY. THE FOLLOWING DESIGN CRITERIA MUST BE ACCOMPLISHED WITH ALL DOORS, FIRE SHUTTERS, AND WINDOWS CLOSED. WHERE THIS DESIGN CRITERIA IS NOT ACCOMPLISHED DURING COMMISSIONING, THE CONTRACTOR MUST PROVIDE ADDITIONAL DEVICES TO MEET THE MINIMUM DESIGN CRITERIA REQUIREMENTS AT NO ADDITIONAL COST. AS-BUILT DRAWINGS MUST DEMONSTRATE THE ADDITIONAL DEVICES AND OR MODIFICATIONS TO THE INSTALLED DEVICES DO NOT EXCEED THE LIMITATIONS OF THE SNAC BOOSTER, FAMN, OR AMPLIFIER BOOSTER PANEL (INCLUSIVE OF SAFETY FACTORS).
2. ALTHOUGH A SPEAKER IS NOT REQUIRED IN EVERY ROOM, SPEAKER PERFORMANCE MUST ADHERE TO THE SOUND POWER AND INTELLIGIBILITY CRITERIA WITHIN THE SPECIFICATIONS, CONTRACT DRAWINGS AND NFPA 72. REGARDLESS, A MINIMUM OF ONE SPEAKER MUST BE PROVIDED IN EACH OCCUPIED SPACE.
3. THE SOUND POWER OF THE AUDIBLE NOTIFICATION MUST BE A MINIMUM OF 70 DBA AND 15 DBA OVER THE AMBIENT CONDITIONS AT THE MOST REMOTE LOCATION WITHIN THE ROOM OR AREA. THE SOUND POWER MUST BE MEASURED OFF THE TEMPORAL TONE PROCEEDING EACH VOICE MESSAGE. THE FOLLOWING CRITERIA MUST BE UTILIZED FOR REVIEW AND APPROVAL OF SHOP DRAWINGS.
   a. THE SOUND POWER MUST BE REDUCED BY 6 DBA EACH TIME THE DISTANCE BETWEEN THE APPLIANCE AND THE LISTENER IS DOUBLED. STARTING DISTANCE IS PER MANUFACTURER'S DATASHEET, TYPICALLY 10 FT.
   b. THE SOUND POWER MUST BE REDUCED IN ACCORDANCE WITH THE MANUFACTURER'S DATASHEET FOR SOUND POWER DISTRIBUTION NOT PERPENDICULAR TO THE SPEAKER FACE. REFER TO MANUFACTURER'S TYPICAL SOUND OUTPUT DISTRIBUTION DIAGRAM.
   c. A MINIMUM 15 DBA LOSS MUST BE ASSUMED THROUGH A STANDARD CLOSED DOOR.
4. INTELLIGIBILITY MUST MEET THE FOLLOWING CRITERIA:
   a. NORMALLY UNOCCUPIED ROOMS ARE CONSIDERED STORAGE ROOMS, MECHANICAL ROOMS, RISER ROOMS, ELECTRICAL ROOMS, JANITOR ROOMS, COMMUNICATION CLOSETS. ALL OTHER ROOMS ARE CONSIDERED NORMALLY OCCUPIED.
   b. A CIS SCORE OF 0.80 MUST BE ACHIEVED IN THE MOST REMOTE AREA OF EACH ROOM AT 5 FT ABOVE THE FINISHED FLOOR.
   c. IN AREAS OF THE BUILDING PROVIDED WITH HARD WALL AND CEILING SURFACES (SUCH AS METAL OR CONCRETE) THAT ARE FOUND TO CAUSE EXCESSIVE SOUND REFLECTIONS MAY BE PERMITTED TO HAVE A CIS SCORE LESS THAN THE MINIMUM REQUIRED VALUE IF BUILDING OCCUPANTS IN THESE AREAS CAN DETERMINE THAT A VOICE SIGNAL IS BEING BROADCAST AND THEY MUST WALK NO MORE THAN 33 FT TO FIND A LOCATION WITH AT LEAST THE MINIMUM REQUIRED CIS VALUE WITHIN THE SAME AREA.
   d. NORMALLY UNOCCUPIED AREAS OF THE BUILDING ARE PERMITTED TO HAVE A CIS SCORE LESS THAN THE MINIMUM REQUIRED VALUE IF PERSONNEL CAN DETERMINE THAT A VOICE SIGNAL IS BEING BROADCAST AND THEY MUST WALK NO MORE THAN 50 FT TO A LOCATION WITH AT LEAST THE MINIMUM REQUIRED CIS VALUE WITHIN THE SAME AREA.
5. EXTERIOR SPEAKERS MUST MEET A MINIMUM OF 70 DBA AND 15 DBA OVER AVERAGE AMBIENT CONDITIONS, WITH A CIS SCORE OF 0.70 AT 16 FT FROM THE SPEAKER.
6. STROBE SPACING FOR THE FIRE ALARM AND MASS NOTIFICATION SYSTEM MUST BE IN ACCORDANCE WITH NFPA 72. IN AREAS WITH CEILINGS, PROVIDE CEILING-MOUNTED SPEAKERS/STROBES. IN AREAS WITHOUT CEILINGS, PROVIDE CEILING- OR WALL-MOUNTED SPEAKERS/STROBES.
7. ENSURE NEW IN-BUILDING FIRE ALARM/MASS NOTIFICATION SYSTEM IS COMPATIBLE WITH EXISTING WHELEN SYSTEM ON BASE. CONTRACTOR TO INTEGRATE WITH WHELEN WEATHER WARNING AND CONFIRM OPERATION WITH 145 COMMAND POST.

GENERAL FA/MN NOTES - 2 :

1. THIS SYSTEM MUST BE A COMBINED FIRE ALARM / MASS NOTIFICATION SYSTEM.
2. THE FIRE ALARM / MASS NOTIFICATION DRAWINGS ARE SCHEMATIC IN NATURE AND SHOW A MINIMAL QUANTITY OF DEVICES. CONTRACTOR MUST DETERMINE THE FINAL QUANTITY AND LOCATION OF ALL DEVICES IN ACCORDANCE WITH THE SPECIFICATIONS, CONTRACT DRAWINGS, AND MANUFACTURER'S WRITTEN RECOMMENDATIONS TO BE COMPLIANT WITH ALL APPLICABLE CODES AND STANDARDS. ADDITIONAL DEVICES MUST BE PROVIDED FOR A FULLY FUNCTIONING FIRE ALARM SYSTEM AS REQUIRED BY NFPA 72.
3. ALL CONDUITS MUST BE CONCEALED IN WALLS, FLOOR SLABS OR CEILINGS UNLESS OTHERWISE INDICATED. EXCEPTION: CONDUIT MAY BE ALLOWED TO BE SURFACE MOUNTED ON WALLS AND CEILINGS IN UNFINISHED AREAS (E.G. MECHANICAL ROOM, ELECTRICAL ROOM, RISER ROOM). WHERE CONDUIT FEEDS DEVICES NOT MOUNTED DIRECTLY ON THE WALL OR CEILING, THE CONDUIT MUST BE ROUTED AS A SINGLE PENDENT TYPE DROP TO EACH DEVICE.
4. ALL EXPOSED FIRE ALARM CONDUITS AND JUNCTION BOXES IN UNFINISHED AREAS MUST BE PAINTED RED OR PRE-FINISHED RED FROM THE FACTORY. CONDUIT AND JUNCTION BOXES EXPOSED IN FINISHED AREAS MUST BE FINISHED TO MATCH ADJACENT FINISHES.
5. CONDUIT MUST BE SUPPORTED IN STRICT ACCORDANCE WITH THE NEC (E.G.10 FT INTERVALS AND 3 FT FROM TERMINATION). TENSION ONLY HANGERS ARE NOT PERMITTED (E.G. BATWINGS). TYPE OF CONDUIT UTILIZED MUST BE IN ACCORDANCE WITH THE ELECTRICAL SPECIFICATIONS UNLESS OTHERWISE NOTED. FLEXIBLE CONDUIT IS ONLY PERMITTED FOR TERMINATION AT DEVICES MOUNTED ON PIPING OR SUBJECTED TO REMOVAL (E.G. FLOW SWITCHES, TAMPER SWITCHES, SPEAKERS AND STROBES MOUNTED IN REMOVABLE CEILINGS).
6. CONDUCTORS MUST RUN FROM DEVICE TO DEVICE WITHOUT SPLICES. WIRE NUTS MUST BE PROHIBITED. TERMINAL STRIPS MUST BE UTILIZED WHERE CONDUCTORS CANNOT BE DIRECTLY TERMINATED AT THE DEVICE (E.G. PIGTAILS OFF A HEAT DETECTOR).
7. FIRE ALARM EQUIPMENT PANELS MUST NOT BE USED AS RACEWAY FOR ROUTING POWER WIRING OR LOW VOLTAGE WIRING. ONLY WIRING TERMINATING WITH THE PANEL MUST BE ROUTED INTO THE PANEL. POWER WIRING AND POWER LIMITED WIRING MUST BE SEPARATED BY A MINIMUM OF TWO INCHES WITHIN THE EQUIPMENT PANELS.
8. THE SUPPLY AND RETURN CLASS A CIRCUITS MUST BE HORIZONTALLYSEPARATED BY 4 FT AND VERTICALLY SEPARATED BY 1 FT EXCEPT WHERE PERMITTED BY NFPA 72. CLASS A CIRCUITS MUST NOT BE ROUTED IN THE SAME CHASE WHERE ROUTED BETWEEN FLOORS.
9. MOUNTING DEVICES IN THE FAMN, SNAC BOOSTER PANELS, AMP BOOSTER PANELS, AND TRANSCEIVER PANELS WHICH ARE NOT UL LISTED AS PART OF THE PANEL IS PROHIBITED.
10. ALL POWER SUPPLIES TO FAMN, SNAC BOOSTER PANELS, AMP BOOSTER PANELS, AND TRANSCEIVER PANELS MUST BE PROVIDED WITH SPD. ALL SLC, NAC, OR IDC CIRCUITS ENTERING OR LEAVING THE BUILDING MUST BE PROVIDED WITH SPD. EXCEPTION: CIRCUITS TO DEVICES MOUNTED DIRECTLY ON THE EXTERIOR OF THE BUILDING DO NOT REQUIRE SPD (E.G. EXTERIOR NOTIFICATION APPLIANCE). SPD MUST BE MOUNTED IN A SEPARATE ENCLOSURE.
11. SPEAKER AND STROBES PROVIDED AT THE SAME LOCATION MAY BE A SINGLE UNIT.

This drawing has been prepared for the use of AECOM's client and may not be used, reproduced or relied upon by third parties, except as agreed by AECOM and its client, as required by law or for use by governmental reviewing agencies. AECOM accepts no responsibility, and denies any liability whatsoever, to any party that modifies this drawing without AECOM's express written consent. Do not scale this document. All measurements must be obtained from the stated dimensions.

AECOM

PROJECT
NEW SECURITY FORCES BUILDING
PAYNE BLVD.
CHARLOTTE, NORTH CAROLINA 28208

CLIENT
NORTH CAROLINA AIR NATIONAL GUARD - 145TH AIRLIFT WING

ARCHITECT/DESIGNER
277 W NATIONWIDE BLVD
COLUMBUS, OH 43215
614-464-4500

CONSULTANTS

REGISTRATION
STATE OF OHIO
Daniel James Kascak
PE-77468
REGISTERED
PROFESSIONAL ENGINEER
05-30-2025
Exp. Date: 12-31-2025

KEY PLAN

ISSUE/REVISION

I/R	DATE	DESCRIPTION
	5/30/25	B-3 SUBMITTAL - FINAL

PROJECT NUMBER
60637899
FJRP 229030

SHEET TITLE
FIRE ALARM SYMBOLS, LEGEND, ABBREVIATIONS AND NOTES

SHEET NUMBER
FA001

©2023 AECOM Corporation

Project Management Initials: MR Designer: Designer Checker: Checker Approved: Approver ARCH E1 30"x42"
Last Plotted: 5/23/2025 9:12:10 AM
Filename: BM 300.dwg Layout: FA001 (USA) 60637899-SPNCANGNA5#60637899_SF-NC ANG_R21_FP-H
Printed on ___% Post-Consumer Recycled Content Paper

Project Management Initials: MR Designer: Designer Checker: Checker Approved: Approver4RCH E1 30"x42"

KEY NOTES (X)

1. PROVIDE, INSTALL, AND TEST A REDUNDANT WHELEN MNS CONTROL PANEL. SYSTEM SHALL BE FULLY OPERATIONAL AND PROGRAMMED TO ACT AS A REDUNDANT MNS BASEWIDE ACTIVATION POINT WITH SEPARATE ANTENNA AND COAX PATHWAY. CONTRACTOR TO CONFIRM OPERATION WITH 145 COMMAND POST, SFS, AND CS.

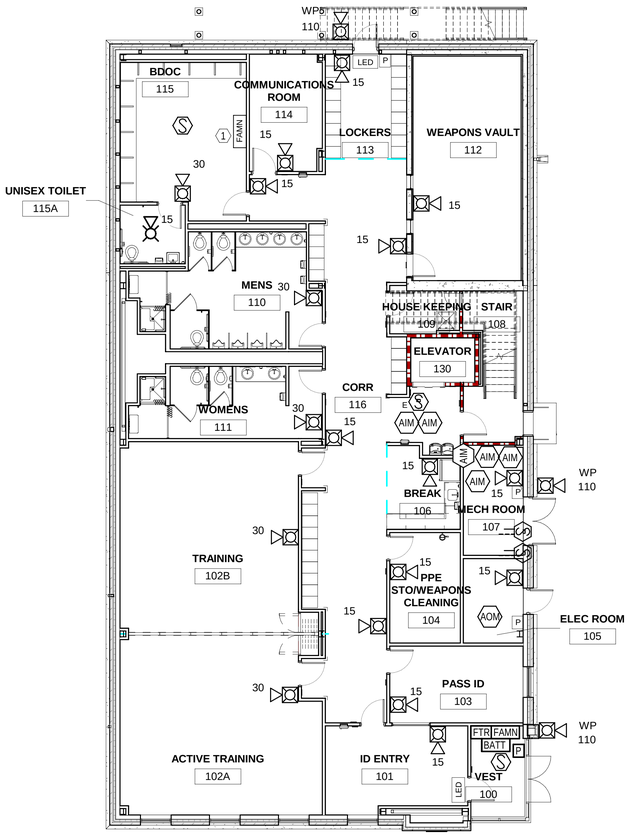

1 FIRST FLOOR PLAN - FIRE ALARM AND MASS NOTIFICATION

1/8" = 1'-0"

1/8" = 1' - 0" 0 5' 10' 15' 30'

This drawing has been prepared for the use of AECOM's client and may not be used, reproduced or relied upon by third parties, except as agreed by AECOM and its client, as required by law or for use by governmental reviewing agencies. AECOM accepts no responsibility, and denies any liability whatsoever, to any party that modifies this drawing without AECOM's express written consent. Do not scale this document. All measurements must be obtained from the stated dimensions.

AECOM

PROJECT

NEW SECURITY FORCES BUILDING

PAYNE BLVD.
CHARLOTTE, NORTH CAROLINA 28208

CLIENT

NORTH CAROLINA AIR NATIONAL GUARD - 145TH AIRLIFT WING

ARCHITECT/DESIGNER

277 W NATIONWIDE BLVD
COLUMBUS, OH 43215
614-464-4500

CONSULTANTS

REGISTRATION

STATE OF OHIO
Daniel James Kascak
PE-77468
REGISTERED
PROFESSIONAL ENGINEER
05-30-2025
Exp. Date: 12-31-2025

KEY PLAN

ISSUE/REVISION

I/R	DATE	DESCRIPTION
	5/30/25	B-3 SUBMITTAL - FINAL

PROJECT NUMBER

60637899
FJRP 229030

SHEET TITLE

FIRST FLOOR PLAN - FIRE ALARM

SHEET NUMBER

FA101

Last Plotted: 5/23/2025 9:12:11 AM
Filename: BIM 360/360-NAEN (USA)\60637899-SFNCANG145WG\3789_SF-NC ANG_E01_FP.rvt

Printed on ____% Post-Consumer Recycled Content Paper

©2023 AECOM Corporation

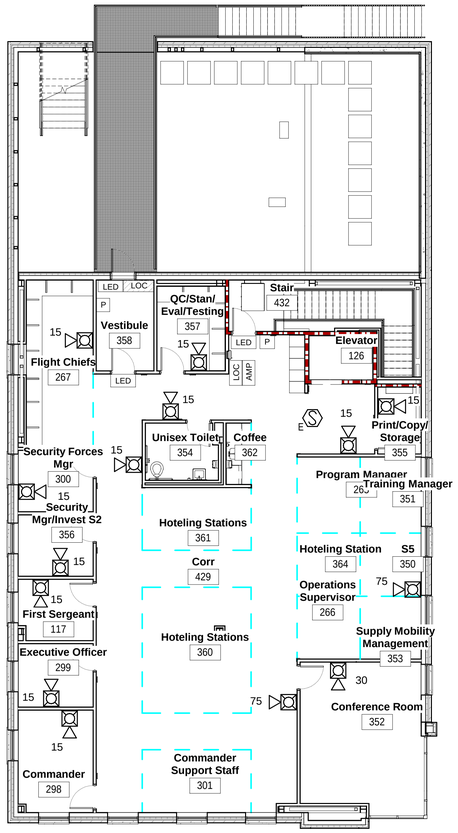

1 **SECOND FLOOR PLAN - FIRE ALARM AND MASS NOTIFICATION**

1/8" = 1'-0"

AECOM

PROJECT

NEW SECURITY FORCES BUILDING

PAYNE BLVD.
CHARLOTTE, NORTH CAROLINA 28208

CLIENT

NORTH CAROLINA AIR NATIONAL GUARD - 145TH AIRLIFT WING

ARCHITECT/DESIGNER

277 W NATIONWIDE BLVD
COLUMBUS, OH 43215
614-464-4500

CONSULTANTS

REGISTRATION

STATE OF OHIO
Daniel James Kascak
PE-77468
REGISTERED
PROFESSIONAL ENGINEER

05-30-2025
Exp. Date: 12-31-2025

KEY PLAN

ISSUE/REVISION

I/R	DATE	DESCRIPTION
	5/30/25	B-3 SUBMITTAL - FINAL

PROJECT NUMBER

60637899
FJRP 229030

SHEET TITLE

SECOND FLOOR PLAN - FIRE ALARM

SHEET NUMBER

FA201

This drawing has been prepared for the use of AECOM's client and may not be used, reproduced or relied upon by third parties, except as agreed by AECOM and its client, as required by law or for use by governmental reviewing agencies. AECOM accepts no responsibility, and denies any liability whatsoever, to any party that modifies this drawing without AECOM's express written consent. Do not scale this document. All measurements must be obtained from the stated dimensions.

©2023 AECOM Corporation

Project Management Initials: MR Designer: Designer Checkset: Checker Approved: Approver4RCH E1 30"x42"
Last Plotted: 5/23/2025 9:12:11 AM
Filename: BM 360:/BP-AMER (USA) 60637899-SFNC/ANG/145#60637899_SF-NC ANG_R21_FP.rvt
Printed on ___% Post-Consumer Recycled Content Paper

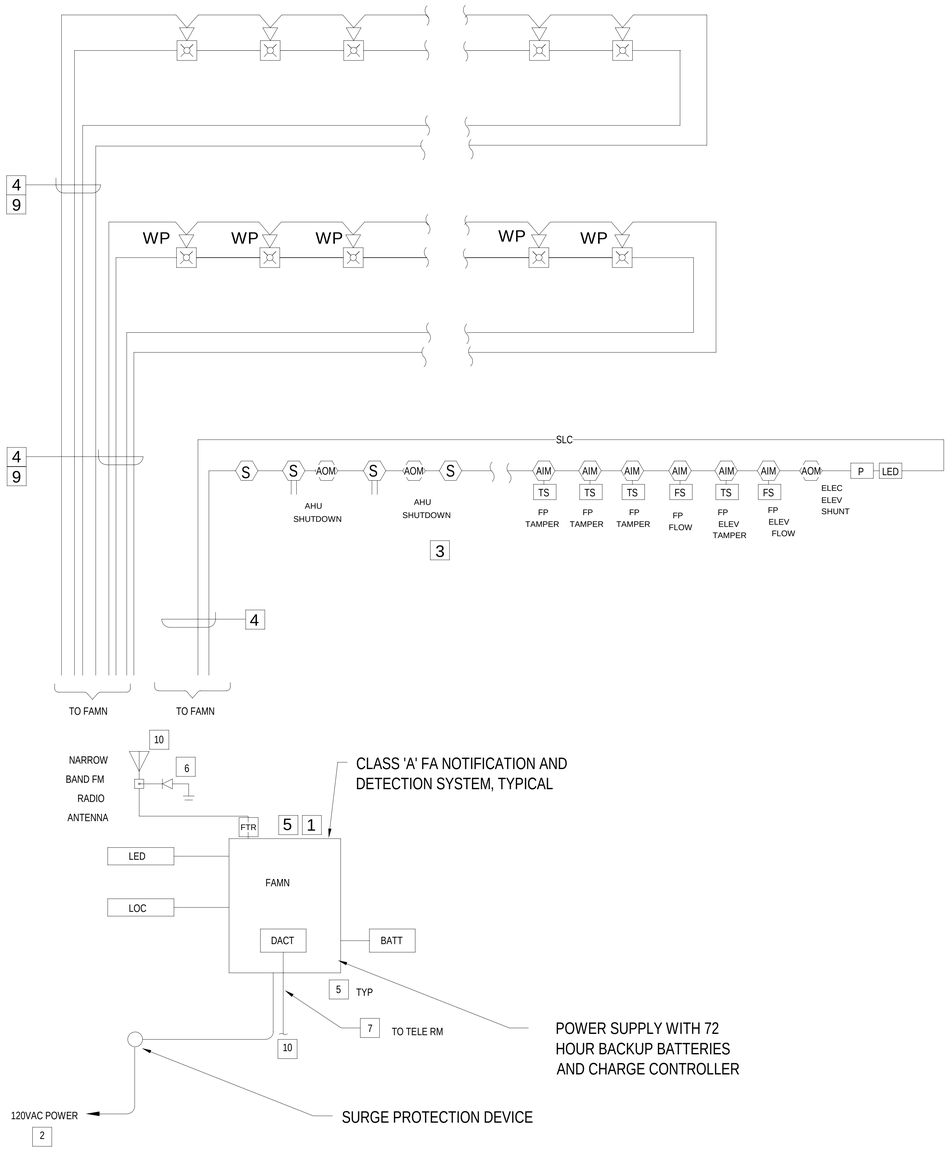

FIRE ALARM RISER DIAGRAM

SCALE: DIAGRAMATIC

GENERAL NOTES:

1. PROVIDE SURGE PROTECTIVE DEVICE (SPD) ON THE POWER SUPPLY CIRCUITS TO THE FAMN AND CIRCUITS INTERFACING WITH THE RADIO TRANSMITTER CONTROL PANEL.

2. THE SPD SHALL BE LISTED IN UL 1449 AND UL 1283, LATEST EDITION. THE SPD SHALL PROVIDE NORMAL SINE WAVE TRACKING, WITH CATEGORY A1 RING WAVE SUPPRESSION (2000 VOLTS, 67 AMPERES, 180 DEGREES) OF LESS THAN 50V FOR NOMINAL 120VAC LEGS. THE SPD SHALL PROVIDE INDEPENDENT, DISTINCT, AND DEDICATED CIRCUITRY FOR EACH POSSIBLE PROTECTION MODE (I.E., LINE-TO-LINE, LINE-TO-NEUTRAL, LINE-TO-GROUND, NEUTRAL-TO-GROUND). SPD CIRCUITRY SHALL BE FULLY ENCAPSULATED FOR PROTECTION OF THE CIRCUITRY AND TO PROVIDE LONGER LIFE EXPECTANCY.

3. THE FAMN PANEL SHALL BE FULLY COMPATIBLE WITH THE BASE FIRE ALARM RECEIVING SYSTEM WITHOUT FIELD MODIFICATIONS TO ANY SYSTEM HARDWARE OR SOFTWARE.

4. REFER TO THE FIRE ALARM/MASS NOTIFICATION SYSTEM FUNCTION MATRIX FOR SPECIFIC NUMBER OF ALARM SIGNALS (E.G., FIRE, SUPERVISORY, TAMPER) TO BE TRANSMITTED TO THE BASE FIRE DEPARTMENT.

5. ACTUATION OF ANY PULL STATIONS SHALL IMMEDIATELY CAUSE THE FA/MN PANELS TO:
   A. ACTIVATE THE FACILITY FIRE EVACUATION ALARM SIGNAL THROUGHOUT THE FACILITY.
   B. TRANSMIT A FIRE ALARM SIGNAL TO THE BASE FIRE DEPARTMENT.

6. THE COMPLETE FA/MN SYSTEM SHALL BE THE PRODUCT OF ONLY ONE MANUFACTURER, WITH THE EXCEPTION OF REMOTE STROBE POWER SUPPLY AND DEVICES NOT AVAILABLE FROM MONACO.

7. NEW BUILDING MASS NOTIFICATION SYSTEM MUST MEET ALL REQUIREMENTS OF UFC 4-021-01.

KEYED NOTES

1 COMBINATION FIRE ALARM AND MASS NOTIFICATION PANEL AND MONACO RADIO TRANSMITTER/RECEIVER.

2 2 #12 AWG & 1#12 AWG GND IN 3/4"C FOR 120V POWER. REFER TO ELECTRICAL DRAWING FOR DETAILS FOR POWER TERMINATIONS.

3 RISER IS DIAGRAMMATIC, REFER TO FLOOR PLANS FOR EXACT QUANTITIES OF DEVICES.

4 PROVIDE CONDUIT AND SIGNAL WIRE PER MANUFACTURERS RECOMMENDATIONS, MINIMUM WIRE SIZE FOR THIS CIRCUIT SHALL BE #14 AND SHALL BE SOLID COPPER WIRE.

5 PROVIDE CIRCUIT PROTECTION FOR ALL FIRE ALARM AND MNS SYSTEMS AND CIRCUITS.

6 PROVIDE SURGE ARRESTOR FOR COAX TO RADIO ANTENNA.

7 PROVIDE TWO DEDICATED PHONE LINES, A DACT FOR BACKUP CONNECTION.

8 3/4"C, 3 #18AWG TWISTED PAIR FIRE CABLE.

9 NAC WIRING SHALL NOT BE INSTALLED IN SAME CONDUIT WITH SLC LOOP WIRING TYPICAL.

10 FIRE ALARM/MASS NOTIFICATION SYSTEM SHALL CONNECT TO THE CENTRAL STATION FOR EXISTING BASE-WIDE FIRE ALARM REPORTING SYSTEM.

AECOM

PROJECT

NEW SECURITY FORCES BUILDING

PAYNE BLVD.
CHARLOTTE, NORTH CAROLINA 28208

CLIENT

NORTH CAROLINA AIR NATIONAL GUARD - 145TH AIRLIFT WING

ARCHITECT/DESIGNER

277 W NATIONWIDE BLVD
COLUMBUS, OH 43215
614-464-4500

CONSULTANTS

REGISTRATION

STATE OF OHIO
Daniel James Kascak
PE-77468
REGISTERED
PROFESSIONAL ENGINEER
05-30-2025
Exp. Date: 12-31-2025

KEY PLAN

ISSUE/REVISION

I/R	DATE	DESCRIPTION
	5/30/25	B-3 SUBMITTAL - FINAL

PROJECT NUMBER

60637899
FJRP 229030

SHEET TITLE

FIRE ALARM DETAILS

SHEET NUMBER

FA501

This drawing has been prepared for the use of AECOM's client and may not be used, reproduced or relied upon by third parties, except as agreed by AECOM and its client, as required by law or for use by governmental reviewing agencies. AECOM accepts no responsibility, and denies any liability whatsoever, to any party that modifies this drawing without AECOM's express written consent. Do not scale this document. All measurements must be obtained from the stated dimensions.

©2023 AECOM Corporation

Project Management Initials: MR Designer: Designer Checkset: Checker Approved: Approver4RCH E1 30"x42"
Last Plotted: 5/23/2025 9:12:11 AM
Filename: BM:/60/60637899/SPACE/NG145/60637899_SF-NC ANG_R21_FP.rvt
Printed on ___% Post-Consumer Recycled Content Paper

FIRE MANAGEMENT CONTROL PANEL (FMCP) FUNCTIONAL MATRIX

ADMIN	ANNUNCIATION AT LOCAL PANEL			NOTIFICATION									
ALARM CONDITIONS	AUDIO-VISUAL FIRE ALARM INDICATION BY DEVICE	AUDIO-VISUAL TROUBLE INDICATION BY DEVICE	AUDIO-VISUAL SUPERVISORY INDICATION BY DEVICE	FIRE ALARM SIGNAL TO FIRE DEPARTMENT	COMMON TROUBLE CONDITION TO FIRE DEPARTMENT	COMMON SUPERVISORY SIGNAL TO FIRE DEPARTMENT	VISUAL EVACUATION NOTIFICATION DEVICES	VISUAL MASS NOTIFICATION DEVICES	DISABLE PUBLIC ADDRESS SYSTEM	VOICE EVACUATION ANNOUNCEMENT	SILENCE VOICE EVACUATION ANNOUNCEMENT	MASS NOTIFICATION ANNOUNCEMENT	MASS NOTIFICATION OVERRIDE SIGNAL TO FIRE SYSTEM CONTROL PANEL
MANUAL FIRE ALARM STATIONS	X			X			X		X	X			
SMOKE/HEAT DETECTORS	X			X			X		X	X			
WATERFLOW DEVICES	X			X			X		X	X			
MASS NOTIFICATION INPUT (LOCAL/BASE WIDE)								X	X		X	X	X
TROUBLE CONDITIONS													
AC POWER FAILURE		X			X								
LOW BATTERY		X			X								
OPEN CIRCUIT FAULT		X			X								
GROUND FAULT		X			X								
NOTIFICATION APPLIANCE CIRCUIT SHORT		X			X								
COMPONENT COMMON TROUBLE		X			X								
SUPERVISORY SIGNALS													
DEACTIVATION FOR MAINTENANCE			X			X							
MASS NOTIFICATION SYSTEM			x			x							
TAMPER SWITCHES			x			x							

1 FIRE SYSTEM FUNCTIONAL SCHEDULES

NTS

NOTE: FIRE ALARM SYSTEM IS DEFERRED APPROVAL SYSTEM. THE CONTRACTOR SHALL SUBMIT ALL REQUIRED ITEMS FOR APPROVAL BY AUTHORITY HAVING JURISDICTION.

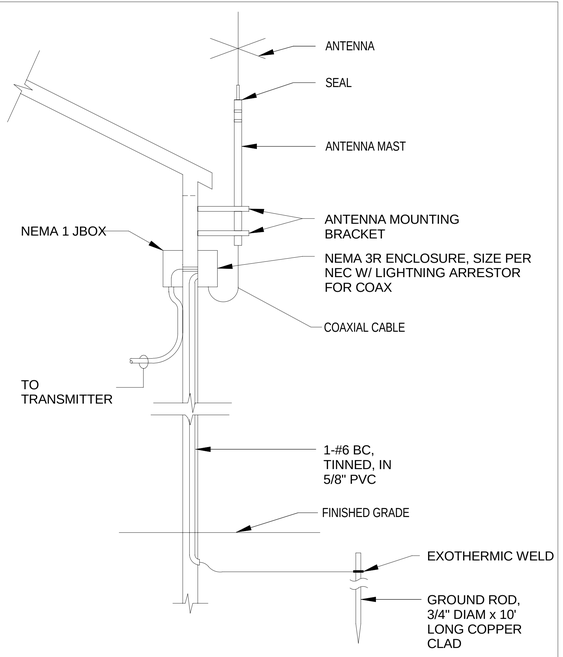

2 FIRE ALARM ANTENNA INSTALLATION

NTS

AECOM

PROJECT

NEW SECURITY FORCES BUILDING

PAYNE BLVD.
CHARLOTTE, NORTH CAROLINA 28208

CLIENT

NORTH CAROLINA AIR NATIONAL GUARD - 145TH AIRLIFT WING

ARCHITECT/DESIGNER

277 W NATIONWIDE BLVD
COLUMBUS, OH 43215
614-464-4500

CONSULTANTS

REGISTRATION

STATE OF OHIO
Daniel James Kascak
PE-77468
REGISTERED
PROFESSIONAL ENGINEER

05-30-2025
Exp. Date: 12-31-2025

KEY PLAN

ISSUE/REVISION

I/R	DATE	DESCRIPTION
	5/30/25	B-3 SUBMITTAL - FINAL

PROJECT NUMBER

60637899
FJRP 229030

SHEET TITLE

FIRE ALARM DETAILS

SHEET NUMBER

FA502

This drawing has been prepared for the use of AECOM's client and may not be used, reproduced or relied upon by third parties, except as agreed by AECOM and its client, as required by law or for use by governmental reviewing agencies. AECOM accepts no responsibility, and denies any liability whatsoever, to any party that modifies this drawing without AECOM's express written consent. Do not scale this document. All measurements must be obtained from the stated dimensions.

©2023 AECOM Corporation

Project Management Initials: MR Designer: Designer Checker: Checker Approved: Approver/ARCH E1 30"x42"
Last Plotted: 5/23/2025 9:12:11 AM
Filename: BIM 360/PROJECT/ (USA) 60637899-SPNCANG145IS0637899_SF-NC ANG_R01_FP.rvt
Printed on ___% Post-Consumer Recycled Content Paper

TYPICAL 2 WIRE ADDRESSABLE SMOKE DETECTOR

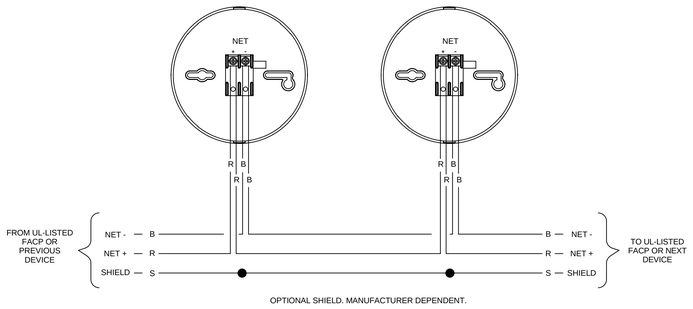

TYPICAL ADDRESSABLE INPUT MODULE (AIM)

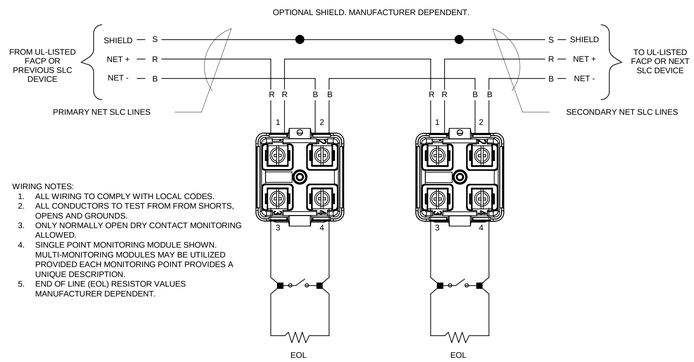

WIRING NOTES:
1. ALL WIRING TO COMPLY WITH LOCAL CODES.
2. ALL CONDUCTORS TO TEST FROM FROM SHORTS, OPENS AND GROUNDS.
3. ONLY NORMALLY OPEN DRY CONTACT MONITORING ALLOWED.
4. SINGLE POINT MONITORING MODULE SHOWN. MULTI-MONITORING MODULES MAY BE UTILIZED PROVIDED EACH MONITORING POINT PROVIDES A UNIQUE DESCRIPTION.
5. END OF LINE (EOL) RESISTOR VALUES MANUFACTURER DEPENDENT.

TYPICAL ADDRESSABLE OUTPUT MODULE (AOM)

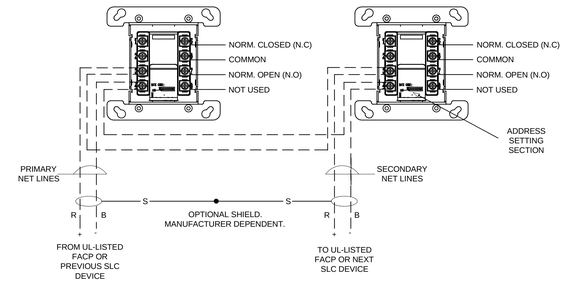

TYPICAL DUCT DETECTOR WIRING

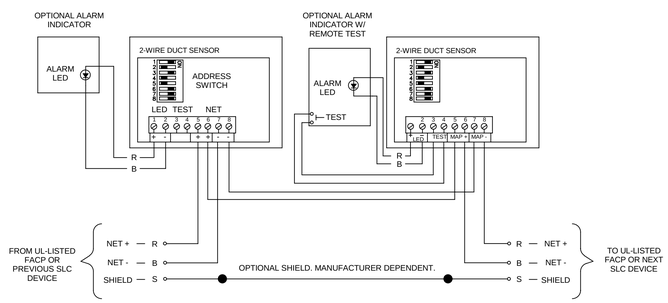

TYPICAL SPEAKER/STROBE WIRING

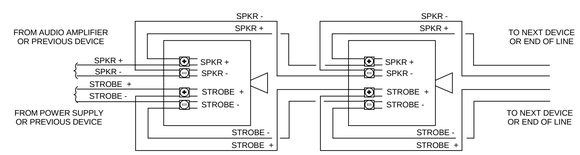

TYPICAL STROBE ONLY WIRING

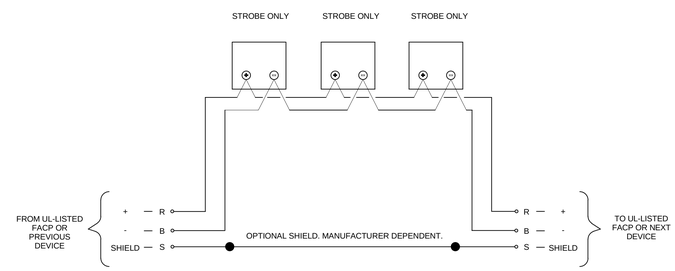

AECOM

PROJECT

NEW SECURITY FORCES BUILDING

PAYNE BLVD.
CHARLOTTE, NORTH CAROLINA 28208

CLIENT

NORTH CAROLINA AIR NATIONAL GUARD - 145TH AIRLIFT WING

ARCHITECT/DESIGNER

277 W NATIONWIDE BLVD
COLUMBUS, OH 43215
614-464-4500

CONSULTANTS

REGISTRATION

STATE OF OHIO
Daniel James Kascak
PE-77468
REGISTERED
PROFESSIONAL ENGINEER
05-30-2025
Exp. Date: 12-31-2025

KEY PLAN

ISSUE/REVISION

I/R	DATE	DESCRIPTION
	5/30/25	B-3 SUBMITTAL - FINAL

PROJECT NUMBER
60637899
FJRP 229030

SHEET TITLE

FIRE ALARM DETAILS

SHEET NUMBER

FA503

This drawing has been prepared for the use of AECOM's client and may not be used, reproduced or relied upon by third parties, except as agreed by AECOM and its client, as required by law or for use by governmental reviewing agencies. AECOM accepts no responsibility, and denies any liability whatsoever, to any party that modifies this drawing without AECOM's express written consent. Do not scale this document. All measurements must be obtained from the stated dimensions.

©2023 AECOM Corporation

Project Management Initials: MR Designer: Designer Checker: Checker Approved: Approver4RCH E1 30"x42"
Last Plotted: 5/23/2025 9:12:12 AM
Filename: BM 300-RP-A4RCH (ISO-A) 60637899-SPNCANG145th60637899_SF-NC ANG_R21_FP-H
Printed on ___% Post-Consumer Recycled Content Paper

FIRE SUPPRESSION LEGEND

- UPRIGHT SPRINKLER
- PENDENT SPRINKLER
- FIRE DEPARTMENT CONNECTION - SIAMESE
- TEST HEADER
- LH — LIGHT HAZARD GROUP
- OH — ORDINARY HAZARD GROUP
- FS — WATERFLOW SWITCH
- TS — TAMPER SWTICH

PIPING LEGEND

- GENERAL VALVE
- ALARM CHECK VALVE
- CHECK VALVE
- OUTSIDE SCREW AND YOKE VALVE (OS&Y)
- NON-RISING STEAM VALVE
- POST INDICATOR VALVE
- WET-PIPE FIRE SPRINKLER SYSTEM RISER
- INDICATING BUTTERFLY VALVE
- FLOOR CONTROL VALVE DIAGRAM
- VALVE WITH TAMPER DETECTOR
- DC — BACKFLOW PREVENTER - DOUBLE CHECK
- FCV — FLOOR CONTROL VALVE

FX ABBREVIATIONS

AFF	ABOVE FINISHED FLOOR
AHJ	AUTHORITY HAVING JURISDICTION
AS	AUTOMATIC SPRINKLER
FP	FIRE PROTECTION
FM	FIRE MAIN
NC	NORMALLY CLOSED
NO	NORMALLY OPEN
SPR	SPRINKLER PIPE
SF	SQUARE FOOT
TYP	TYPICAL

DETAIL/SECTION TITLE

SECTION, DETAIL OR ELEVATION IDENTIFICATION MARK
XX
X-XXX
SECTION, DETAIL OR ELEVATION TITLE
PLATE NUMBER WHERE SECTION, DETAIL OR ELEVATION IS TAKEN

DETAIL CALLOUT SYMBOL

DETAIL NUMBER
PLATE NUMBER WHERE DETAIL IS DRAWN
XX
X-XXX

SECTION CUT SYMBOL

SECTION LETTER
PLATE NUMBER WHERE SECTION IS DRAWN
XX
X-XXX
VIEW SECTION

FIRE SUPPRESSION DESIGN CRITERIA

1. THE FIRE SUPPRESSION SYSTEM MUST BE SERVED FROM THE EXISTING UNDERGROUND HYDRANT SYSTEM. CONTRACTOR MUST PERFORM A HYDRANT FLOW TEST, AND INCORPORATE THIS TEST INTO THE HYDRAULIC CALCULATIONS. HYDRANT FLOW TESTING MUST BE IN ACCORDANCE WITH NFPA 291, AND THE RESULTS OF THE TESTING MUST BE SUBMITTED AS INDICATED IN NFPA 291 FIGURE 4.11.2.5.
2. FIRE SUPPRESSION SYSTEM CALCULATIONS SHALL BE BASED ON A SINGLE CONNECTION TO THE FIRE WATER SYSTEM, ASSUMING ONE CONNECTION IS OUT OF SERVICE.
3. HYDRAULIC CALCULATIONS MUST INCLUDE A 10% OR 5 PSI SAFETY FACTOR, WHICHEVER IS GREATER.
4. THE FIRE SUPPRESSION SYSTEM MUST BE DESIGNED AND INSTALLED BY A LICENSED / CERTIFIED COMPANY WHERE EMPLOYEES ARE LICENSED / CERTIFIED TO INSTALL FIRE PROTECTION EQUIPMENT.
5. ALL COMPONENTS AND ASSEMBLIES USED IN THIS FIRE PROTECTION SYSTEM MUST BE SPECIFICALLY UL LISTED OR FM APPROVED FOR THEIR INTENDED USE.
6. PIPING MATERIAL PRIOR TO THE BACKFLOW PREVENTER MUST BE SUITABLE FOR USE IN POTABLE WATER SYSTEMS IN COMPLIANCE WITH THE INTERNATIONAL PLUMBING CODE & LOCAL JURISDICTION.
7. FOR INFORMATION ONLY: FLOW TEST (12" MAIN AT STREET)

DATE	1-16-2023
STATIC	62 PSI
RESIDUAL	42 PSI
FLOW	920 GPM

FIRE SUPPRESSION GENERAL NOTES

1. PROVIDE ALL NECESSARY COMPONENTS FOR A WET-PIPE SYSTEM IN ALL AREAS INDICATED. AT A MINIMUM PROVIDE COMPONENTS AS INDICATED ON THESE DRAWINGS. CONTRACTOR MUST PROVIDE ADDITIONAL COMPONENTS AND MODIFICATIONS AS REQUIRED TO PROVIDE A FULLY FUNCTIONING FIRE SUPPRESSION SYSTEM.
2. ALL SYSTEMS WHICH REQUIRE COORDINATION BETWEEN TRADES MUST BE TO THE SATISFACTION OF THE ENGINEER AND AUTHORITY HAVING JURISDICTION. ANY DEFICIENCIES, INCONSISTENCIES, OR POORLY COORDINATED INSTALLATIONS MUST BE CORRECTED BY THE CONTRACTOR AT NO ADDITIONAL COST.
3. FINAL DESIGN REQUIREMENTS (DEVICE QUANTITY, SIZE, AND LOCATIONS) ARE THE SOLE RESPONSIBILITY OF THE FIRE SUPRESSION CONTRACTOR. DRAWINGS INDICATE MINIMUM REQUIREMENTS; THE FIRE SUPPRESSION CONTRACTOR WILL BE RESPONSIBLE FOR VERIFYING AND COORDINATING FINAL DESIGN REQUIREMENTS WITH THESE CONSTRUCTION DOCUMENTS, SPECIFICATIONS, REFERENCE DOCUMENTS, APPLICABLE CODES, AND FACILITY USER REQUIREMENTS.
4. ALL DRAIN PENETRATIONS THROUGH EXTERIOR WALL MUST BE NO GREATER THAN 2'-0" ABOVE FINISHED GRADE AND PROVIDED WITH SPLASH BLOCK. PROVIDE TEST/DRAIN RISER IN STAIRWELLS DISCHARGING THROUGH EXTERIOR WALLS. TEST/DRAIN CONNECTIONS IN PENTHOUSES ARE PERMITTED TO DISCHARGE TO ROOF.
5. BUILDING IS SEISMIC CATEGORY C FOR PURPOSES OF SUPPORTS AND HANGERS.

APPLICABLE CODES

UNLESS OTHERWISE INDICATED OR SPECIFIED, PERFORM THE WORK IN CONFORMANCE WITH THE LATEST EDITIONS OF ALL APPLICABLE REGULATORY REQUIREMENTS, INCLUDING, BUT NOT LIMITED TO, THE FOLLOWING:

UFC 03-600-01, FIRE PROTECTION ENGINEERING FOR FACILITIES, 2016, CHANGE 6 MAY 6, 2021
UFC 04-021-01, DESIGN AND O&M MASS NOTIFICATION SYSTEMS, 2008, CHANGE 1 JANUARY 2010
NFPA 13, STANDARD FOR THE INSTALLATION OF SPRINKLER SYSTEMS, 2022 EDITION
NFPA 72, NATIONAL FIRE ALARM CODE, 2022 EDITION

FIRE FLOW TEST CONDUCTED 1-16-2023

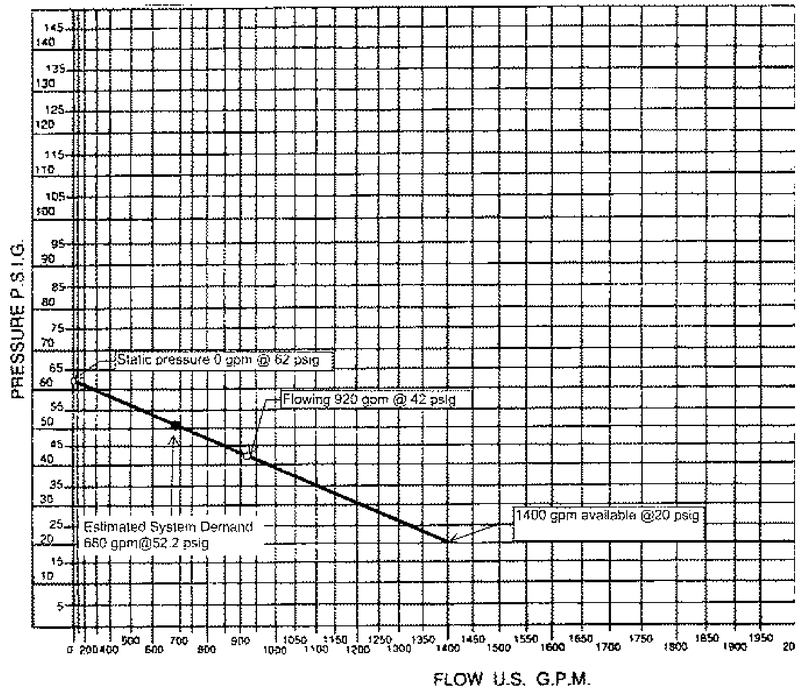

FIRE PROTECTION SPRINKLER SYSTEM DESIGN CRITERIA

MARK	HAZARD CLASSIFICATION	SYSTEM TYPE	DENSITY GPM/SF	REMOTE AREA SQ FT	MAXIMUM AREA PER SPRINKLER SQ FT	HOSE DEMAND GPM	SPRINKLER CHARACTERISTICS				SEISMIC DESIGN CATEGORY	NOTES
							TEMP RATING	TYPE	K-FACTOR	FINISH		
	LIGHT HAZARD (HC-1)	WET	0.10	1500	225	250	ORDINARY	SEE NOTES	5.6 OR 8.0	SEE NOTES	C	1,2,3
	ORDINARY HAZARD	WET	0.20	2500	130	250	ORDINARY	SEE NOTES	8.0	SEE NOTES	C	1,2,3,4
	ORDINARY HAZARD ELEVATOR	WET	0.20	ENTIRE ROOM	130	250	ORDINARY	STANDARD RESPONSE BRASS UPRIGHT	8.0	CORROSION-RESISTANT	C	4

NOTE 1: PROVIDE 200ºF RATED SPRINKLERS IN MECHANICAL AND COMMUNICATION ROOMS, AND HIGHER TEMPERATURES WHERE REQUIRED BY NFPA 13.
NOTE 2: WHERE CEILINGS ARE NOT PROVIDED, USE QUICK RESPONSE BRASS UPRIGHT SPRINKLERS.
NOTE 3: WHERE CEILINGS ARE PRESENT, USE WHITE QUICK-RESPONSE CONCEALED SPRINKLERS.
NOTE 4: PROVIDE LISTED GUARDS FOR SPRINKLERS IN ELEVATOR MACHINE ROOMS AND TR ROOMS WITHOUT CEILINGS.

AECOM

PROJECT
NEW SECURITY FORCES BUILDING
PAYNE BLVD.
CHARLOTTE, NORTH CAROLINA 28208

CLIENT
NORTH CAROLINA AIR NATIONAL GUARD - 145TH AIRLIFT WING

ARCHITECT/DESIGNER
277 W NATIONWIDE BLVD
COLUMBUS, OH 43215
614-464-4500

CONSULTANTS

REGISTRATION
STATE OF OHIO
Daniel James Kascak
PE-77468
REGISTERED PROFESSIONAL ENGINEER
05-30-2025
Exp. Date: 12-31-2025

KEY PLAN

ISSUE/REVISION

I/R	DATE	DESCRIPTION
	5/30/25	B-3 SUBMITTAL - FINAL

PROJECT NUMBER
60637899
FJRP 229030

SHEET TITLE
FIRE SUPPRESSION SYMBOLS, LEGEND, ABBREVIATIONS AND NOTES

SHEET NUMBER
FX001

This drawing has been prepared for the use of AECOM's client and may not be used, reproduced or relied upon by third parties, except as agreed by AECOM and its client, as required by law or for use by governmental reviewing agencies. AECOM accepts no responsibility, and denies any liability whatsoever, to any party that modifies this drawing without AECOM's express written consent. Do not scale this document. All measurements must be obtained from the stated dimensions.

©2023 AECOM Corporation

Project Management Initials: MR Designer: Designer Checker: Checker Approved: Approver4RCH E1 30"x42"
Last Plotted: 5/23/2025 9:12:12 AM
Filename: BIM 360/360/FP-04BER (USA) 60637899-SPRCANCLHS60637899_SF-NC ANG_R01_FP.rvt
Printed on ___% Post-Consumer Recycled Content Paper

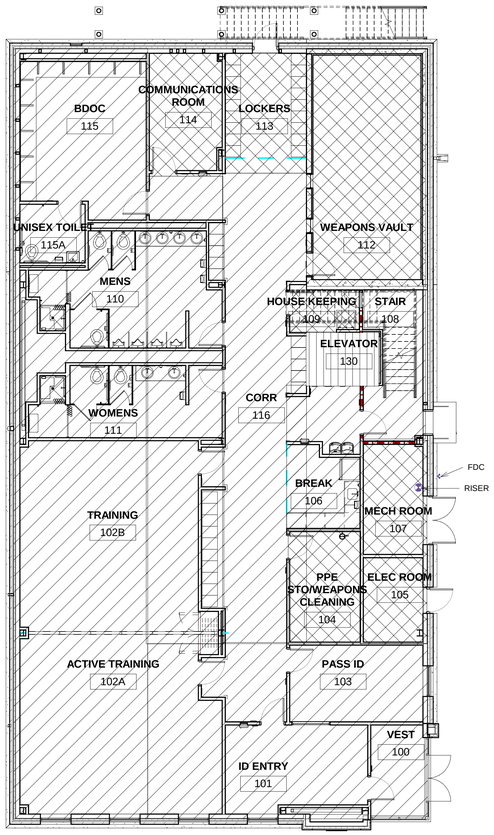

1 FIRST FLOOR PLAN - FIRE SUPPRESSION

1/8" = 1'-0"

1/8" = 1' - 0" 0 5' 10' 15' 30'

AECOM

PROJECT

NEW SECURITY FORCES BUILDING

PAYNE BLVD.
CHARLOTTE, NORTH CAROLINA 28208

CLIENT

NORTH CAROLINA AIR NATIONAL GUARD - 145TH AIRLIFT WING

ARCHITECT/DESIGNER

277 W NATIONWIDE BLVD
COLUMBUS, OH 43215
614-464-4500

CONSULTANTS

REGISTRATION

STATE OF OHIO
Daniel James Kascak
PE-77468
REGISTERED
PROFESSIONAL ENGINEER

05-30-2025
Exp. Date: 12-31-2025

KEY PLAN

ISSUE/REVISION

I/R	DATE	DESCRIPTION
	5/30/25	B-3 SUBMITTAL - FINAL

PROJECT NUMBER

60637899
FJRP 229030

SHEET TITLE

FIRST FLOOR PLAN - FIRE SUPPRESSION

SHEET NUMBER

FX101

This drawing has been prepared for the use of AECOM's client and may not be used, reproduced or relied upon by third parties, except as agreed by AECOM and its client, as required by law or for use by governmental reviewing agencies. AECOM accepts no responsibility, and denies any liability whatsoever, to any party that modifies this drawing without AECOM's express written consent. Do not scale this document. All measurements must be obtained from the stated dimensions.

©2023 AECOM Corporation

Project Management Initials: MR Designer: Designer Checked: Checker Approved: Approver4RCH E1 30"x42"

Last Plotted: 5/23/2025 9:12:13 AM
Filename: BIM 360/360-AMER (USA)\60637899-SF\NCANG\145\60637899_SF-NC ANG_R31_FP.rvt

Printed on ____% Post-Consumer Recycled Content Paper

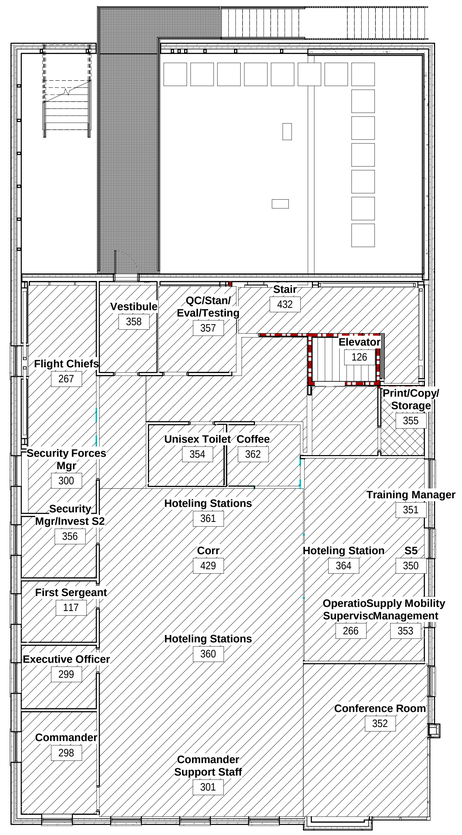

1 **SECOND FLOOR PLAN - FIRE SUPPRESSION**

1/8" = 1'-0"

AECOM

PROJECT

NEW SECURITY FORCES BUILDING

PAYNE BLVD.
CHARLOTTE, NORTH CAROLINA 28208

CLIENT

NORTH CAROLINA AIR NATIONAL GUARD - 145TH AIRLIFT WING

ARCHITECT/DESIGNER

277 W NATIONWIDE BLVD
COLUMBUS, OH 43215
614-464-4500

CONSULTANTS

REGISTRATION

STATE OF OHIO
Daniel James Kascak
PE-77468
REGISTERED
PROFESSIONAL ENGINEER

05-30-2025
Exp. Date: 12-31-2025

KEY PLAN

ISSUE/REVISION

I/R	DATE	DESCRIPTION
	5/30/25	B-3 SUBMITTAL - FINAL

PROJECT NUMBER

60637899
FJRP 229030

SHEET TITLE

SECOND FLOOR PLAN - FIRE SUPPRESSION

SHEET NUMBER

FX201

This drawing has been prepared for the use of AECOM's client and may not be used, reproduced or relied upon by third parties, except as agreed by AECOM and its client, as required by law or for use by governmental reviewing agencies. AECOM accepts no responsibility, and denies any liability whatsoever, to any party that modifies this drawing without AECOM's express written consent. Do not scale this document. All measurements must be obtained from the stated dimensions.

©2023 AECOM Corporation

Project Management Initials: MR Designer: Designer Checker: Checker Approved: ApproverARCH E1 30"x42"

Last Plotted: 5/23/2025 9:12:13 AM
Filename: BIM 360/RP-HABER (SDK) 60637899-SPNCANG145/60637899_SF-NC ANG_B21_FP.rvt

Printed on ___ % Post-Consumer Recycled Content Paper

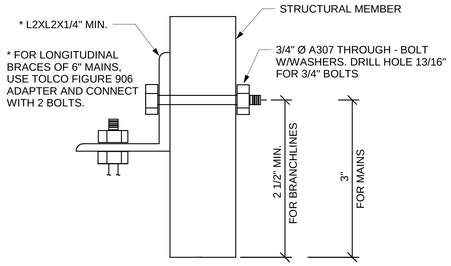

1 Attachment Detail

1/4" = 1'-0"

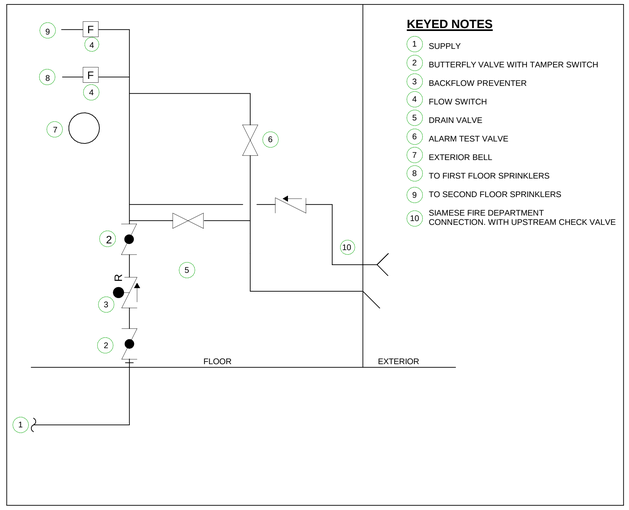

KEYED NOTES

1. SUPPLY
2. BUTTERFLY VALVE WITH TAMPER SWITCH
3. BACKFLOW PREVENTER
4. FLOW SWITCH
5. DRAIN VALVE
6. ALARM TEST VALVE
7. EXTERIOR BELL
8. TO FIRST FLOOR SPRINKLERS
9. TO SECOND FLOOR SPRINKLERS
10. SIAMESE FIRE DEPARTMENT CONNECTION. WITH UPSTREAM CHECK VALVE

2 FP - TYPICAL FIRE RISER DIAGRAM

NOT TO SCALE

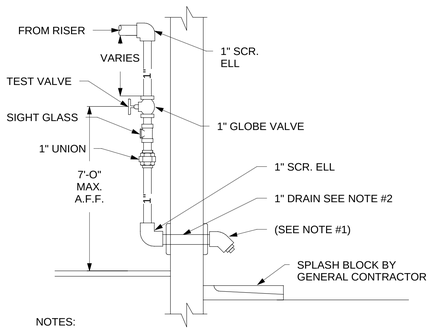

NOTES:

1. PROVIDE SMOOTH BORE CORROSION-RESISTANT OUTLET GIVING FLOW EQUIVALENT TO ONE SPRINKLER HEAD. DRAIN DISCHARGE OVER SPLASH BLOCK AT PLANTING AREA.
2. SEAL PIPING THROUGH WALL. PROVIDE ESCUTCHEONS ON BOTH SIDES OF THE WALL.
3. PROVIDE VALVE IDENTIFICATION SIGNS PER NFPA 13-6.6.4.

3 INSPECTORS TEST CONNECTION

NTS

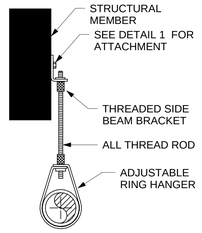

NOTES:

1. ALL HANGERS TO COMPLY WITH NFPA-13, SEISMIC CATEGORY C
2. DISTANCE BETWEEN HANGERS SHALL BE PER NFPA-13

4 Pipe Hanger

1/4" = 1'-0"

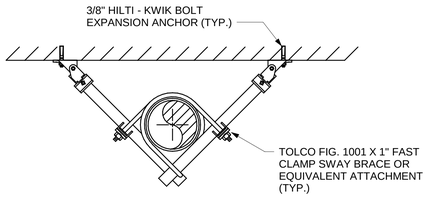

5 Riser Brace

1/4" = 1'-0"

NOTES:

1. THE DESIGNATION OF THE FLOOR OR ROOM SHALL BE USED IN PLACE OF <FLOOR> ON EACH SIGN.
2. SPRINKLER DESIGN DENSITY AND COVERAGE AREA TO BE PROVIDED
3. ALL RISER SIGNS TO BE INSTALLED INCORPORATING S.S. BANDS, NUTS, BOLTS AND BRACKETS AS REQUIRED TYPICAL 2 PLC'S. EACH SIGN
4. ALL SIGNS TO BE MIN. 0.032 INCH ALUMINUM PLATE. COLORS SHALL BE OPAQUE AS SPECIFIED IN TABLE 1 OF FUNDAMENTAL SPECIFICATION OF SAFETY COLORS FOR C1E STANDARD SOURCE "C", Z53.1. SIGNS SHALL BE DESIGNED IN ACCORDANCE WITH NFPA 13.

6 RISER SIGNAGE

NTS

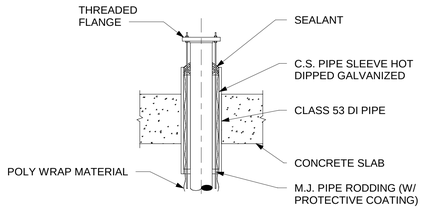

7 SLAB PENETRATION DETAIL

NTS

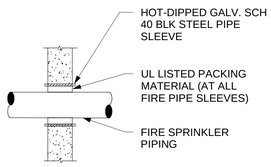

8 WALL PENETRATION DETAIL

NTS

AECOM

PROJECT

NEW SECURITY FORCES BUILDING

PAYNE BLVD.
CHARLOTTE, NORTH CAROLINA 28208

CLIENT

NORTH CAROLINA AIR NATIONAL GUARD - 145TH AIRLIFT WING

ARCHITECT/DESIGNER

277 W NATIONWIDE BLVD
COLUMBUS, OH 43215
614-464-4500

CONSULTANTS

REGISTRATION

STATE OF OHIO
Daniel James Kascak
PE-77468
REGISTERED
PROFESSIONAL ENGINEER

05-30-2025
Exp. Date: 12-31-2025

KEY PLAN

ISSUE/REVISION

I/R	DATE	DESCRIPTION
	5/30/25	B-3 SUBMITTAL - FINAL

PROJECT NUMBER

60637899
FJRP 229030

SHEET TITLE

FIRE SUPPRESSION DETAILS

SHEET NUMBER

FX501

This drawing has been prepared for the use of AECOM's client and may not be used, reproduced or relied upon by third parties, except as agreed by AECOM and its clients, as required by law or for use by governmental reviewing agencies. AECOM accepts no responsibility, and denies any liability whatsoever, to any party that modifies this drawing without AECOM's express written consent. Do not scale this document. All measurements must be obtained from the stated dimensions.

©2023 AECOM Corporation

Project Management Initials: MR Designer: JEL Checker: Checker Approved: Approver4RCH E1 30"x42"
Last Plotted: 5/23/2025 9:12:13 AM
Filename: BM 360-BP-AMER (USA) 60637899-SPNCANG145thWS7899_SF-NC ANG_R31_FP.rvt
Printed on ___% Post-Consumer Recycled Content Paper

Project Management Initials: MR Designer: JEL Checklist: Checker: Approved: Approver4RCH E1 30"x42"

LEGEND

ABC — DRY CHEMICAL EXTINGUISHER 2A-10B-5C

CO2 FIRE EXTINGUISHER 10 LB

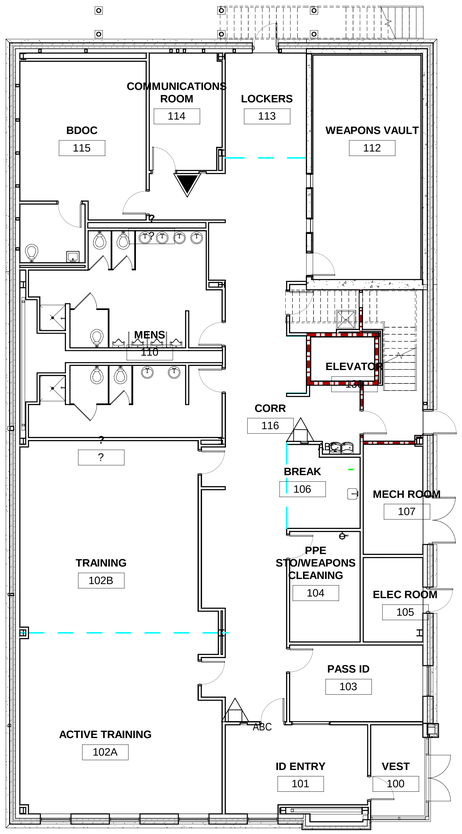

1 FIRST FLOOR PLAN - FIRE EXTINGUISHER

1/8" = 1'-0"

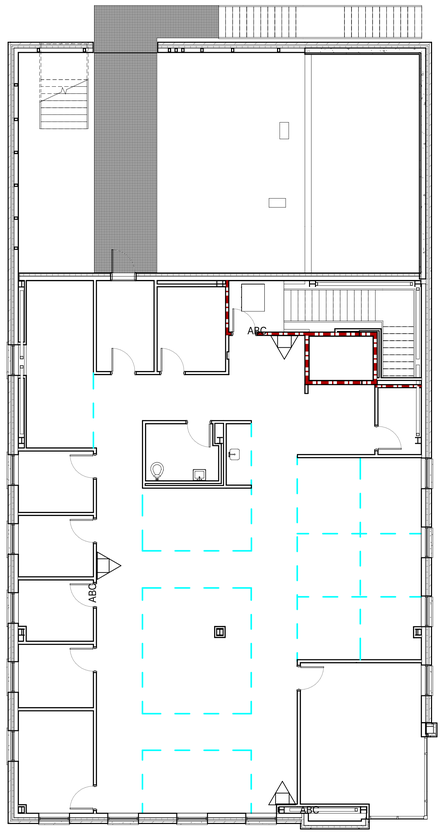

2 SECOND FLOOR PLAN - FIRE EXTINGUISHER

1/8" = 1'-0"

AECOM

PROJECT

NEW SECURITY FORCES BUILDING

PAYNE BLVD.
CHARLOTTE, NORTH CAROLINA 28208

CLIENT

NORTH CAROLINA AIR NATIONAL GUARD - 145TH AIRLIFT WING

ARCHITECT/DESIGNER

277 W NATIONWIDE BLVD
COLUMBUS, OH 43215
614-464-4500

CONSULTANTS

REGISTRATION

STATE OF OHIO
Daniel James Kascak
PE-77468
REGISTERED
PROFESSIONAL ENGINEER

05-30-2025
Exp. Date: 12-31-2025

KEY PLAN

ISSUE/REVISION

I/R	DATE	DESCRIPTION
	5/30/25	B-3 SUBMITTAL - FINAL

PROJECT NUMBER

60637899
FJRP 229030

SHEET TITLE

FIRE EXTINGUISHER LAYOUT

SHEET NUMBER

FX801

This drawing has been prepared for the use of AECOM's client and may not be used, reproduced or relied upon by third parties, except as agreed by AECOM and its client, as required by law or for use by governmental reviewing agencies. AECOM accepts no responsibility, and denies any liability whatsoever, to any party that modifies this drawing without AECOM's express written consent. Do not scale this document. All measurements must be obtained from the stated dimensions.

©2023 AECOM Corporation

Last Plotted: 5/23/2025 9:12:14 AM
Filename: BM 300.00-ARCH-FX801 60637899-SFNCANG145thWing_SF-NC ANG_R01_FP-1A

Printed on ___% Post-Consumer Recycled Content Paper

12-PLUMBING-12.00-P001-GENERAL INFO - PLUMBING
Project Management Initials: MR Designer: Designer Checked: Checker Approved: Approver/ARCH E1 30"x42"

PLUMBING ABBREVIATIONS

NOTE: NOT ALL ABBREVIATIONS MAY BE USED.

ABBREVIATION	DESCRIPTION
(D)	EXISTING TO BE DEMOLISHED
(E)	EXISTING TO REMAIN
(F)	FUTURE
A/E	ARCHITECT / ENGINEER
AD	ACCESS DOOR
AFF	ABOVE FINISHED FLOOR
AFG	ABOVE FINISHED GRADE
AMB	AMBIENT
APPROX	APPROXIMATE
ARCH	ARCHITECTURE
ASHRAE	AMERICAN SOCIETY OF HEATING, REFRIGERATION, AIR CONDITIONING ENGINEERS
ASME	AMERICAN SOCIETY OF MECHANICAL ENGINEERS
ASPE	AMERICAN SOCIETY OF PLUMBING ENGINEERS
AVTR	ACID VENT THROUGH ROOF
BFP	BLACKFLOW PREVENTER
BHP	BRAKE HORSEPOWER
BLDG	BUILDING
BTUH	BRITISH THERMAL UNITS PER HOUR
BV	BALANCE VALVE
CFH	CUBIC FEET PER HOUR
CI	CAST IRON
CL	CENTERLINE
DN	DOWN
DSN	DOWN SPOUT NOZZLE
DWG	DRAWING
DWV	DRAIN WASTE VENT
EFF	EFFICIENCY
EL	ELEVATION
FFE	FINISHED FLOOR ELEVATION
FLA	FULL LOAD AMPS
FT	FEET
FU	FIXTURE UNIT
GAL	GALLON
GPD	GALLONS PER DAY
GPH	GALLONS PER HOUR
GPM	GALLONS PER MINUTE
HP	HORSEPOWER
IE	INVERT ELEVATION
KW	KILOWATT
LF	LINEAR FEET
MAV	MANUAL AIR VENT
MBH	THOUSAND BTUH
MCA	MINIMUM CIRCUIT AMPACITY
MCF	THOUSAND CUBIC FEET
MECH	MECHANICAL
MFR	MANUFACTURER
MH	MANHOLE
MOCP	MAXIMUM OVER CURRENT PROTECTION
MOU	MEMORANDUM OF UNDERSTANDING
N/A	NOT APPLICABLE
NC	NORMALLY CLOSED
NIC	NOT IN CONTRACT
NO	NORMALLY OPEN
NPSH	NET POSITIVE SUCTION HEAD
NTS	NOT TO SCALE
OD	OUTSIDE DIAMETER
PD	PRESSURE DROP
PDI	PLUMBING AND DRAINAGE INSTITUTE
PPM	PARTS PER MILLION
PRV	PRESSURE REGULATING VALVE
PSI	POUNDS PER SQUARE INCH
RPM	REVOLUTIONS PER MINUTE
SCFM	STANDARD CUBIC FEET PER MINUTE
SF	SQUARE FEET
SS	STAINLESS STEEL
TEMP	TEMPERATURE
TYP	TYPICAL
UNO	UNLESS NOTED OTHERWISE
VTR	VENT THROUGH ROOF
W	WATTS
WG	WATER GAUGE
WM	WATER METER
WPD	WATER PRESSURE DROP
°C	DEGREES CENTIGRADE (CELCIUS)
°F	DEGREES FAHRENHEIT
Ø	DIAMETER

PLUMBING STANDARD SYSTEM ABBREVIATIONS

NOTE: NOT ALL ABBREVIATIONS MAY BE USED.

ABBREVIATION	DESCRIPTION
A	COMPRESSED AIR (SHOP AIR)
AI	AIR INTAKE
CD	CONDENSATE DRAIN
D	DRAIN
DCW	DOMESTIC COLD WATER
DCWR	DOMESTIC COLD WATER RETURN
DHW	DOMESTIC HOT WATER
DHWR	DOMESTIC HOT WATER RETURN
DS	DOWN SPOUT
FOO	FUEL OIL OVERFLOW
FOR	FUEL OIL RETURN
FOS	FUEL OIL SUPPLY
FOV	FUEL OIL VENT
G	NATURAL GAS
ID	INDIRECT DRAIN
LP	LIQUID PROPANE
NPW	NON POTABLE WATER
PD	PUMP DISCHARGE
PW	POTABLE WATER
RO	REVERSE OSMOSIS
ROR	REVERSE OSMOSIS RETURN
ROS	REVERSE OSMOSIS SUPPLY
SAN	SANITARY SEWER
SCW	SOFTENED COLD WATER
SCWR	SOFTENED COLD WATER RETURN
SST	SECONDARY STORM
ST	STORM
TW	TEPID WATER
TWR	TEPID WATER RETURN
TWS	TEPID WATER SUPPLY
V	VENT
VAC	VACUUM
W	WATER

PLUMBING EQUIPMENT ABBREVIATIONS

NOTE: NOT ALL ABBREVIATIONS MAY BE USED.

ABBREVIATION	DESCRIPTION
AAV	AUTOMATIC AIR VENT
AC	AIR COMPRESSOR
AD	AREA DRAIN
AST	ABOVE GROUND STORAGE TANK
BAC	BREATHING AIR COMPRESSOR
BT	BATHTUB
CO	CLEANOUT
CRD	COMBINATION ROOF DRAIN
CS	CLINICAL SINK
DAC	DENTAL AIR COMPRESSOR
DF	DRINKING FOUNTAIN
DVP	DENTAL VACUUM PUMP
DW	DISHWASHER
EEW	EMERGENCY EYE WASH
ESH	EMERGENCY SHOWER
ESP	ELEVATOR SUMP PUMP
ET	EXPANSION TANK
EWC	ELECTRIC WATER COOLER
EWH	ELECTRIC WATER HEATER
FCO	FLOOR CLEANOUT
FD	FLOOR DRAIN
FOP	FUEL OIL PUMP
FPHB	FREEZE PROOF HOSE BIBB
FS	FLOOR SINK
GCO	GRADE CLEANOUT
GI	GREASE INTERCEPTOR
GWH	GAS WATER HEATER
HB	HOSE BIBB
HD	HUB DRAIN
HS	HAND SINK
L	LAVATORY
LAC	LABORATORY AIR COMPRESSOR
LVP	LABORATORY VACUUM PUMP
MAC	MEDICAL AIR COMPRESSOR
MB	MOP BASIN
MVP	MEDICAL VACUUM PUMP
NT	NEUTRALIZATION TANK
OFD	OVERFLOW DRAIN
OI	OIL INTERCEPTOR
P	PUMP
RCP	RECIRCULATING PUMP
RD	ROOF DRAIN
RH	ROOF HYDRANT
RPBP	REDUCED PRESSURE BACKFLOW PREVENTER
S	SINK
SE	SEWAGE EJECTOR
SH	SHOWER
SI	SAND INTERCEPTOR
SP	SUMP PUMP
SS	SERVICE SINK
SWH	STEAM WATER HEATER
TD	TRENCH DRAIN
TMV	THERMOSTATIC MIXING VALVE
TP	TRAP PRIMER
UR	URINAL
UST	UNDERGROUND STORAGE TANK
VB	VACUUM BREAKER
WC	WATER CLOSET
WCO	WALL CLEANOUT
WH	WALL HYDRANT
WHA	WATER HAMMER ARRESTOR
YH	YARD HYDRANT

PLUMBING SYMBOLS LIST

NOTE: NOT ALL SYMBOLS MAY BE USED.

SYMBOL	DESCRIPTION
1	KEYNOTE (SEE LEGEND ON SHEET)
	FLOW ARROW
	CONNECT TO EXISTING
	END OF DEMOLITION
	PIPE CAPPED
	PIPE DOWN
	PIPE UP
	PIPE TEE DOWN
	PIPE REDUCER
	PIPE UNION
	PIPE GUIDES OR SLEEVES
	PIPE ANCHOR
	FLEXIBLE PIPE CONNECTION
	GENERAL SERVICE VALVE (SEE SPECIFICATIONS FOR VALVE TYPE PER APPLICATION)
	CHECK VALVE (ARROW INDICATES DIRECTION OF FLOW)
	MANUAL BALANCING VALVE
	AUTOMATIC BALANCING VALVE
	SOLENOID VALVE
	TWO-WAY CONTROL VALVE
	THREE-WAY CONTROL VALVE
PICBV	TWO-WAY PRESSURE INDEPENDENT CONTROL AND BALANCE VALVE
	THERMOSTATIC MIXING VALVE
	PRESSURE REDUCING VALVE
VB	VACUUM BREAKER
	PLUG VALVE
S	SUPERVISED VALVE
	TEMPERATURE AND PRESSURE RELIEF VALVE
	DRAIN VALVE WITH THREADED HOSE CONNECTION
	AIR GAP FITTING
	DOUBLE CHECK VALVE ASSEMBLY
	REDUCED PRESSURE ZONE BACKFLOW PREVENTER
	PRESSURE GAUGE WITH STOPCOCK
	STRAINER WITH BLOW DOWN VALVE
AV	AUTOMATIC AIR VENT
MAV	MANUAL AIR VENT
	TEMPERATURE/PRESSURE TEST PLUG (PETE'S PLUG)
FS	WATER FLOW SWITCH
PS	PRESSURE SWITCH
CO	CLEAN OUT
WCO	WALL CLEAN OUT
FCO	FLOOR CLEAN OUT
GCO	GRADE CLEAN OUT
AD	AREA DRAIN
FD	FLOOR DRAIN
OFD	OVERFLOW ROOF DRAIN
RD	ROOF DRAIN
HB	HOSE BIBB
WH	WALL HYDRANT
YH	YARD HYDRANT
	FLOW METER
	THERMOMETER
	PITCH DOWN IN DIRECTION OF ARROW
M	METER
W #	RISER OR STACK DESIGNATION & NUMBER
A	HOT WATER MAINTENANCE CABLE START POINT
A	HOT WATER MAINTENANCE CABLE TEE POINT
A	HOT WATER MAINTENANCE CABLE END POINT

PLUMBING SHEET INDEX

SHEET NUMBER	SHEET TITLE
P001	GENERAL INFO - PLUMBING
P100	UNDERGROUND PLUMBING PLAN
P101	FIRST FLOOR PLUMBING PLAN
P102	SECOND FLOOR PLUMBING PLAN
P103	ROOF PLUMBING PLAN
P301	PLUMBING ENLARGED PLANS
P601	PLUMBING DETAILS
P602	PLUMBING DETAILS
P701	PLUMBING SCHEDULES
P801	PLUMBING STACK DIAGRAM
P802	DOMESTIC RISER DIAGRAM

PLUMBING GENERAL NOTES

1. PROVIDE ACCESS PANEL IN DRYWALL CEILINGS TO ACCESS ITEMS SUCH AS VALVES OR AREA ALARM SENSORS.
2. COORDINATE EXACT REQUIREMENTS AND LOCATION OF WORK WITH THE WORK OF OTHER TRADES PRIOR TO FABRICATION. PROVIDE ADDITIONAL OFF SETS AND SECTIONS OF PIPING AS MAY BE REQUIRED TO MEET THE APPLICABLE JOB CONDITION REQUIREMENTS. VERIFY JOB-SITE ELEVATIONS, DIMENSIONS, AND CONDITIONS, PRIOR TO FABRICATION OR INSTALLATION OF THE WORK. COORDINATE EXACT ROUTING OF PIPING WITH OTHER TRADES SO THAT NO CONFLICTS OCCUR WITH DUCTWORK, PIPING, LIGHTS, STRUCTURE, ETC.
3. ALL FLOOR PENETRATIONS TO BE SEALED WATER TIGHT AND COMPLETELY PACKED WITH SEALANT OR FIRE STOP MATERIAL WHERE APPLICABLE BY TRADE CONTRACTORS.
4. PROVIDE ALL MATERIALS AND EQUIPMENT AND PERFORM ALL LABOR REQUIRED TO INSTALL COMPLETE AND OPERABLE SYSTEMS AS INDICATED ON THE DRAWINGS AND SPECIFICATIONS. INCLUDE ALL NECESSARY AND APPLICABLE APPURTENANCES, WHETHER INDICATED OR NOT.
5. INSTALL ALL WORK TO COMPLY WITH ALL LAWS, REGULATIONS, CODES AND STANDARDS (FEDERAL, STATE, AND LOCAL), AS ADOPTED BY THE AGENCIES HAVING JURISDICTION, INCLUDING REASONABLY ANTICIPATED REVISIONS BASED ON EMERGING TRENDS IN BUILDING REGULATIONS. WHERE ANY OF THESE DIFFER, THE MOST STRINGENT SHALL APPLY.
6. COORDINATE THE LOCATION OF ALL UTILITY CONNECTION POINTS, FLOOR DRAINS AND HUB DRAINS FOR EQUIPMENT WITH OTHER TRADES.
7. PROVIDE A LINE SIZED SHUT-OFF VALVE IN ALL HOT AND COLD WATER BRANCHES SERVING PLUMBING FIXTURES OR EQUIPMENT.
8. ALL INDICATED PIPING PENETRATIONS THRU COUNTERTOPS BY PLUMBING CONTRACTOR. PROVIDE CHROME PLATED ESCUTCHEON.
9. PROVIDE A WATER HAMMER ARRESTOR ON HOT AND COLD WATER LINES AT ENDS OF MAINS. AT ENDS OF BRANCH LINES, AT END OF LINES SERVING GROUPS OF PLUMBING FIXTURES AND FOR ALL QUICK CLOSING VALVES. SIZE AND INSTALL ARRESTORS AS RECOMMENDED BY PDI WH-201 TO ELIMINATE WATER HAMMER. INSTALL WHERE ACCESSIBLE FOR SERVICE AND PROVIDE ISOLATION VALVE AND ACCESS DOOR IF REQUIRED.
10. THE CONTRACTOR IS RESPONSIBLE FOR FIRESTOPPING AT ALL PLUMBING RELATED PENETRATIONS OF FIRE, SMOKE AND OTHER RATED STRUCTURES, INCLUDING FLOORS, WALLS, PARTITIONS, ETC. REFER TO ARCHITECTURAL DOCUMENTATION FOR LOCATIONS OF ALL RATED STRUCTURES, AND SPECIFIC INFORMATION AND REQUIREMENTS PERTAINING TO SAME.
11. LAYOUT AND INSTALLATION OF PIPING, EQUIPMENT AND APPURTENANCES INDICATED ON PLAN IS SCHEMATIC IN NATURE. EXACT LOCATION, ROUTING AND INSTALLATION TO BE COORDINATED WITH BUILDING STRUCTURES AND ALL OTHER TRADES.
12. UNLESS INDICATED OTHERWISE, ALL FIXTURES AND EQUIPMENT PROVIDED WITH PLUMBING SUPPLY PIPING TO BE FURNISHED WITH APPROVED/LISTED STOPS IN ACCESSIBLE LOCATIONS.
13. UNLESS INDICATED OTHERWISE BY THE ARCHITECTURAL DOCUMENTATION (WHICH SHALL TAKE PRECEDENCE), PLUMBING FIXTURES AND EQUIPMENT MOUNTING HEIGHTS SHALL BE AS INDICATED ON PLUMBING SCHEDULES.
14. PLUMBING PIPING IS NOT PERMITTED TO RUN ABOVE ANY ELECTRICAL SWITCH GEAR, MOTOR CONTROL CENTERS OR PANELS (INCLUDING ACCESS/CLEARANCE SPACE 42" IN FRONT OF THESE ITEMS, AND MIN 30" WIDE), UNDER ANY CIRCUMSTANCES. LOCATION OF NEW ITEMS OF THESE TYPES TO BE DETERMINED AND CONFIRMED FROM INDICATION BY THE PROJECT ELECTRICAL DOCUMENTATION, AND ACTUAL INSTALLATION CONFIRMED WITH THE ELECTRICAL CONTRACTOR PRIOR TO START OF WORK.
15. THE MINIMUM SIZES OF SANITARY, VENT AND WATER BRANCH PIPING TO SINGLE FIXTURES SHALL BE AS SCHEDULED IN THE PLUMBING FIXTURE SCHEDULE.
16. CONTRACTOR TO PROVIDE MISCELLANEOUS STEEL AS REQUIRED TO SUPPORT EQUIPMENT AND ASSOCIATED COMPONENTS SUCH AS CONTROL PANELS, TANKS, VALVES, PIPING, VARIABLE SPEED DRIVES, ETC. MISCELLANEOUS STEEL TO CONSIST OF GALVANIZED STRUT, ANGLE IRON, CHANNELS OR OTHER STANDARD GLAVANIZED STEEL ELEMENTS. ALL WELDED CONNECTIONS TO BE GROUND AND COLD GALVANIZED IN THE FIELD.
17. PROVIDE BACKFLOW PREVENTER OR VACUUM BREAKER IN DOMESTIC WATER LINES, WHERE BACKFLOW OR BACK PRESSURE MAY OCCUR, AS REQUIRED BY THE STATE OR LOCAL JURISDICTION. EQUIPMENT SUCH AS STERILIZERS, COFFEE MAKERS, WASHERS/DISINFECTORS, ULTRASONIC CLEANERS, CARBONATED VENDING MACHINES, ICE MAKERS, SHOWER MIXING VALVES WITH HOSES, HOSE BIBBS AND WALL HYDRANTS ARE TO INCLUDE BACKFLOW PREVENTION DEVICES IN THE WATER LINES THAT SERVE THEM.
18. ALL SANITARY VENT LINES ARE TO TAKE OFF FROM SANITARY WASTE BRANCHES AT A MINIMUM OF 45 DEGREE RISE OFF TOP OF PIPE.
19. PROVIDE SHUT-OFF BALL VALVE IN WATER LINES SERVING TRAP PRIMER DISTRIBUTION UNITS, BALANCING VALVES AND WATER HAMMER ARRESTORS.
20. PROVIDE ACCESS PANEL IN WALLS AND DRYWALL CEILINGS TO ACCESS VALVES.

AECOM

PROJECT

NEW SECURITY FORCES BUILDING

PAYNE BLVD.
CHARLOTTE, NORTH CAROLINA 28208

CLIENT

NORTH CAROLINA AIR NATIONAL GUARD - 145TH AIRLIFT WING

ARCHITECT/DESIGNER

AECOM

277 W NATIONWIDE BLVD
COLUMBUS, OH 43215
614-464-4500

www.aecom.com

CONSULTANTS

REGISTRATION

STATE OF OHIO
RENAE FOCHESATO
E-90911
REGISTERED PROFESSIONAL ENGINEER

05-30-2025

KEY PLAN

ISSUE/REVISION

I/R	DATE	DESCRIPTION
	05-30-2025	B-3 SUBMITTAL - FINAL
	03-14-2025	B-2 SUBMITTAL
	09-29-2023	B-1 SUBMITTAL

PROJECT NUMBER

60637899

SHEET TITLE

GENERAL INFO - PLUMBING

SHEET NUMBER

P001

Last Plotted: 5/22/2025 12:27:02 PM
Filename: BM 3800-P0-MEP-PLMB-(USA)-60637899-SFNCANG145ARG93788_SF-NC ANG_R21_P.rvt

Printed on ___% Post-Consumer Recycled Content Paper

©2023 AECOM Corporation

12-PLUMBING-12.10-P100-UNDERGROUND PLUMBING PLAN
Designer: Designer Checker: Checker Approved: Approver
Project Management Initials: MR
ARCH E1 30"x42"

KEYNOTES

1. REFER TO CIVIL DRAWINGS FOR CONTINUATION.
2. ROUTE SUMP PUMP DISCHARGE TO 2" ABOVE LEVEL 1 MOP SINK WITH PROPER AIR GAP.

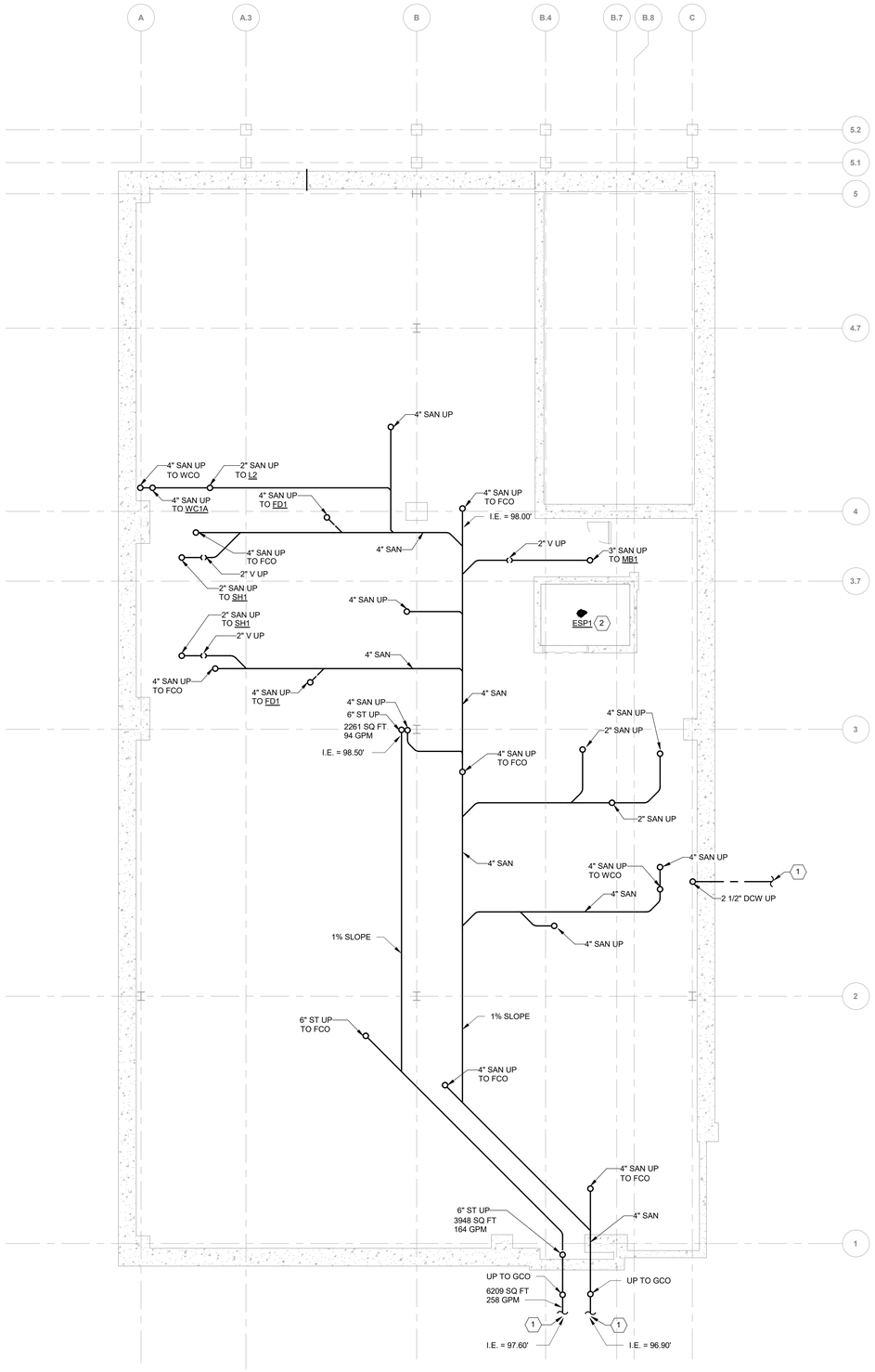

1 P100 **UNDERGROUND PLUMBING PLAN**
Scale: 3/16" = 1'-0"

N

AECOM

PROJECT

NEW SECURITY FORCES BUILDING

PAYNE BLVD.
CHARLOTTE, NORTH CAROLINA 28208

CLIENT

NORTH CAROLINA AIR NATIONAL GUARD - 145TH AIRLIFT WING

ARCHITECT/DESIGNER

AECOM

277 W NATIONWIDE BLVD
COLUMBUS, OH 43215
614-464-4500

www.aecom.com

CONSULTANTS

REGISTRATION

STATE OF OHIO
RENAE FOCHESATO
E-90911
REGISTERED
PROFESSIONAL ENGINEER

05-30-2025

KEY PLAN

ISSUE/REVISION

I/R	DATE	DESCRIPTION
	05-30-2025	B-3 SUBMITTAL - FINAL
	03-14-2025	B-2 SUBMITTAL
	09-29-2023	B-1 SUBMITTAL

PROJECT NUMBER

60637899

SHEET TITLE

UNDERGROUND PLUMBING PLAN

SHEET NUMBER

P100

Last Plotted: 5/22/2025 12:27:03 PM
Filename: BIM 360:08-AMER\USA\60637899-SFNCANG\145\60637899_SF-NC ANG_R21_P.rvt
Printed on:___% Post-Consumer Recycled Content Paper
©2023 AECOM Corporation

12-PLUMBING-12.11-P101-FIRST FLOOR PLUMBING PLAN
Project Management Initials: MR Designer: Designer Checked: Checker Approved: Approver/ARCH E1 30"x42"

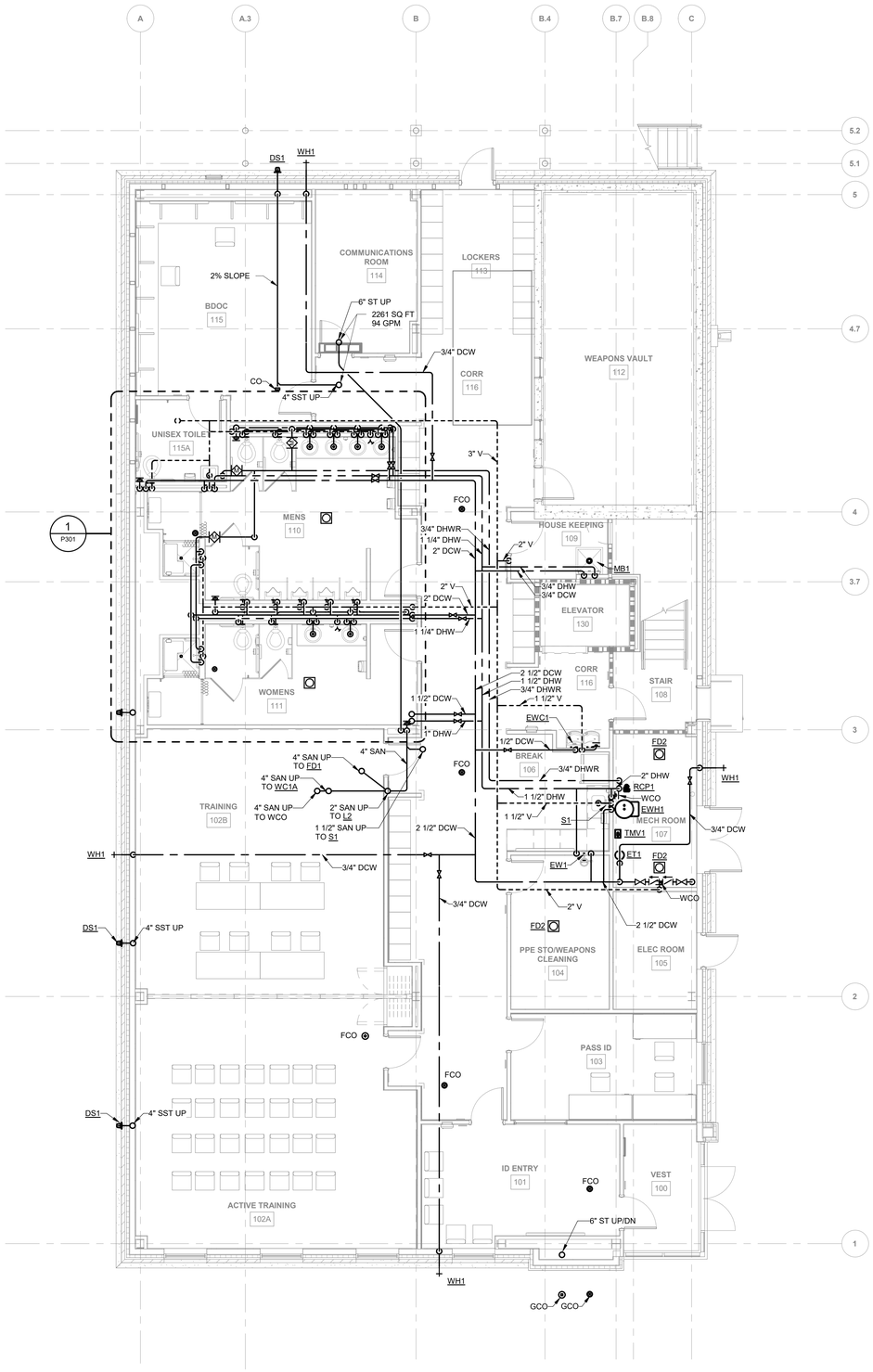

1 P101 **FIRST FLOOR PLUMBING PLAN**
Scale: 3/16" = 1'-0"

N

AECOM

PROJECT
NEW SECURITY FORCES BUILDING
PAYNE BLVD.
CHARLOTTE, NORTH CAROLINA 28208

CLIENT
NORTH CAROLINA AIR NATIONAL GUARD - 145TH AIRLIFT WING

ARCHITECT/DESIGNER
AECOM
277 W NATIONWIDE BLVD
COLUMBUS, OH 43215
614-464-4500

www.aecom.com

CONSULTANTS

REGISTRATION

STATE OF OHIO
RENAE FOCHESATO
E-90911
REGISTERED
PROFESSIONAL ENGINEER
05-30-2025

KEY PLAN

ISSUE/REVISION

I/R	DATE	DESCRIPTION
	05-30-2025	B-3 SUBMITTAL - FINAL
	03-14-2025	B-2 SUBMITTAL
	09-29-2023	B-1 SUBMITTAL

PROJECT NUMBER
60637899

SHEET TITLE
FIRST FLOOR PLUMBING PLAN

SHEET NUMBER
P101

Last Plotted: 5/22/2025 12:27:03 PM
Filename: BIM 360://BP-NMER-(USA)/60637899-SFNCANG145BG60637899_SF-NC ANG_R21_P.rvt

Printed on ___% Post-Consumer Recycled Content Paper

©2023 AECOM Corporation

12-PLUMBING-12.12-P102-SECOND FLOOR PLUMBING PLAN
Project Management Initials: MR Designer: Designer Checker: Checker Approved: Approver#RCH E1 30"x42"

KEYNOTES

1 4" VTR.
2 PROVIDE TRAP PRIMER AND VACUUM BREAKER OUTLET TUBE FITTING. ROUTE TRAP PRIMER PIPING BELOW FLOOR TO PRIMER INLET ON FLOOR DRAIN TRAP.

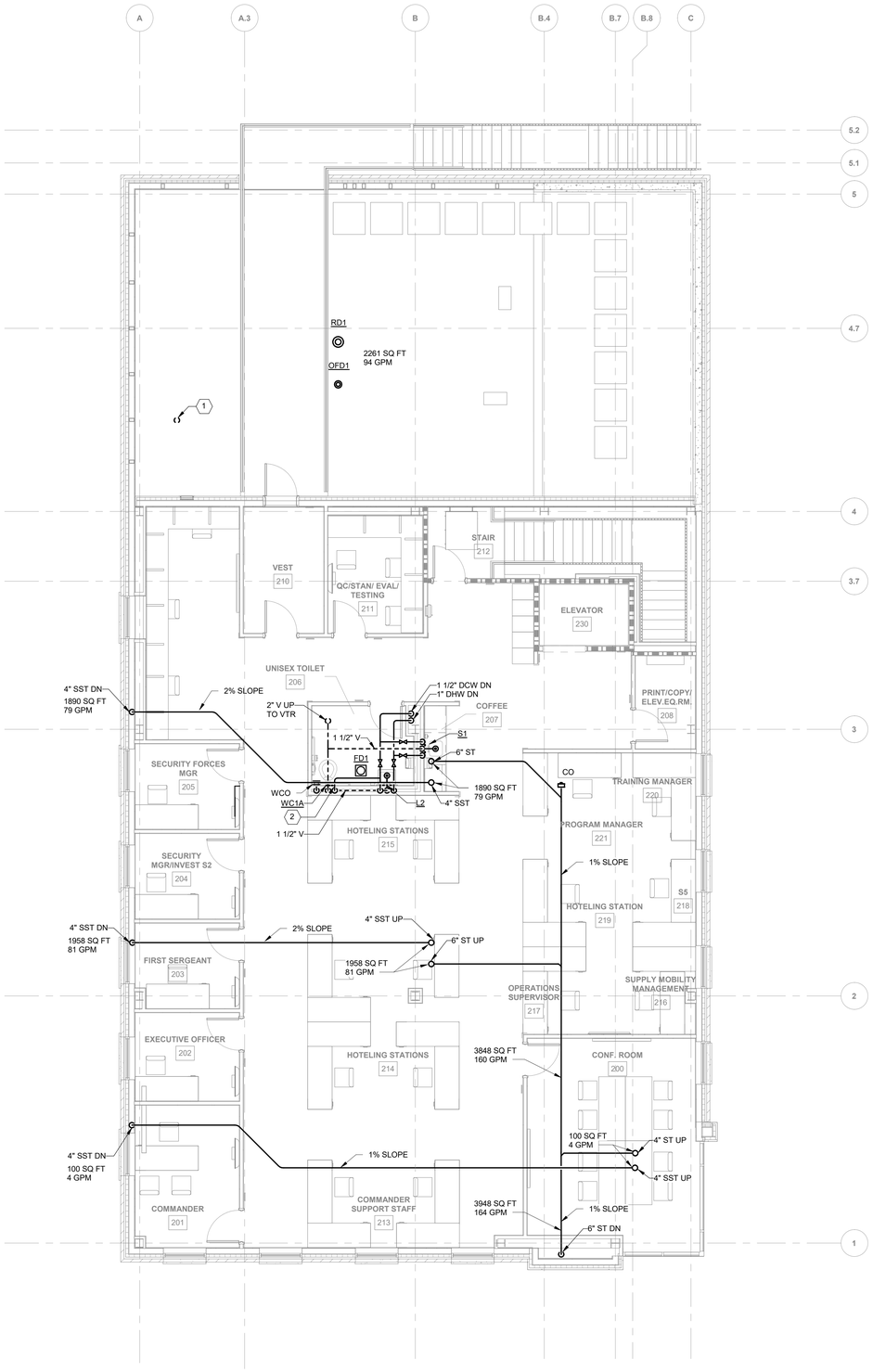

1 P102 **SECOND FLOOR PLUMBING PLAN**
Scale: 3/16" = 1'-0"

N

AECOM

PROJECT
NEW SECURITY FORCES BUILDING
PAYNE BLVD.
CHARLOTTE, NORTH CAROLINA 28208

CLIENT
NORTH CAROLINA AIR NATIONAL GUARD - 145TH AIRLIFT WING

ARCHITECT/DESIGNER
AECOM
277 W NATIONWIDE BLVD
COLUMBUS, OH 43215
614-464-4500

www.aecom.com

CONSULTANTS

REGISTRATION
STATE OF OHIO
RENAE FOCHESATO
E-90911
REGISTERED
PROFESSIONAL ENGINEER
05-30-2025

KEY PLAN

ISSUE/REVISION

I/R	DATE	DESCRIPTION
	05-30-2025	B-3 SUBMITTAL - FINAL
	03-14-2025	B-2 SUBMITTAL
	09-29-2023	B-1 SUBMITTAL

PROJECT NUMBER
60637899

SHEET TITLE
SECOND FLOOR PLUMBING PLAN

SHEET NUMBER
P102

©2023 AECOM Corporation

Last Plotted: 5/22/2025 12:27:04 PM
Filename: BIM 360/BP-NMER (USA)/60637899-SFNCANG145BD3789_SF-NC ANG_R21_P.rvt

Printed on ___% Post-Consumer Recycled Content Paper

12-PLUMBING-12.13-P103-ROOF PLUMBING PLAN
Project Management Initials: MR Designer: Designer Checker: Checker Approved: Approver ARCH E1 30"x42"

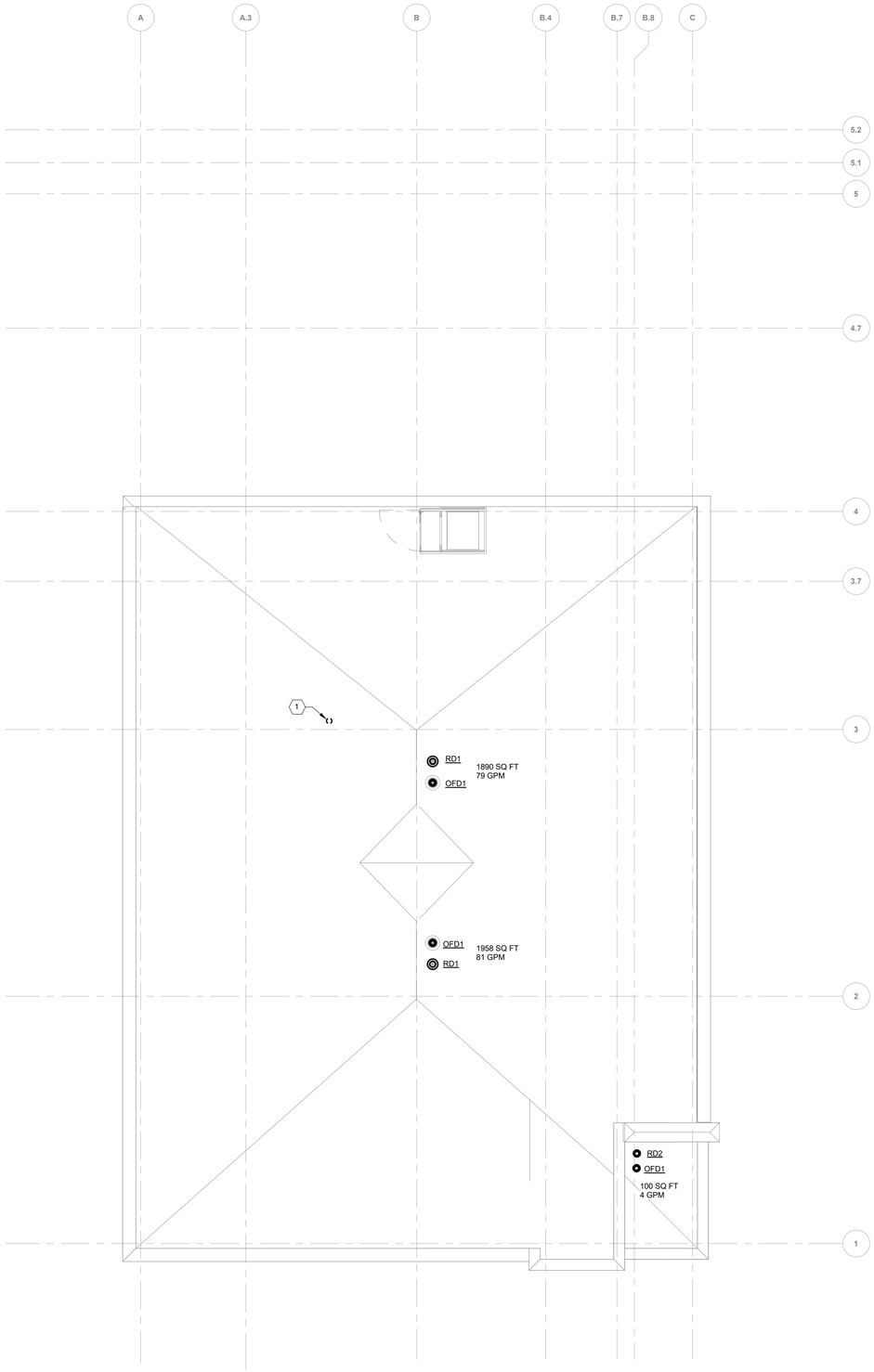

KEYNOTES

1 3" VTR.

1 **ROOF PLUMBING PLAN**
P103 Scale: 3/16" = 1'-0"

N

AECOM

PROJECT
NEW SECURITY FORCES BUILDING
PAYNE BLVD.
CHARLOTTE, NORTH CAROLINA 28208

CLIENT
NORTH CAROLINA AIR NATIONAL GUARD - 145TH AIRLIFT WING

ARCHITECT/DESIGNER
AECOM
277 W NATIONWIDE BLVD
COLUMBUS, OH 43215
614-464-4500

www.aecom.com

CONSULTANTS

REGISTRATION
STATE OF OHIO
RENAE FOCHESATO
E-90911
REGISTERED
PROFESSIONAL ENGINEER
05-30-2025

KEY PLAN

ISSUE/REVISION

I/R	DATE	DESCRIPTION
	05-30-2025	B-3 SUBMITTAL - FINAL
	03-14-2025	B-2 SUBMITTAL
	09-29-2023	B-1 SUBMITTAL

PROJECT NUMBER
60637899

SHEET TITLE
ROOF PLUMBING PLAN

SHEET NUMBER
P103

Last Plotted: 5/22/2025 12:27:04 PM
Filename: BM.360.ISP-ABER.USA(60637899-SFNCANG145thG3799)_SF NC ANG_R21_P.rvt
Printed on ___% Post-Consumer Recycled Content Paper
©2023 AECOM Corporation

12-PLUMBING-12.30-P301-PLUMBING ENLARGED PLANS
Project Management Initials: MR Designer: Designer Checker: Checker Approved: Approver ARCH E1 30"x42"

KEYNOTES

1. PROVIDE TRAP PRIMER AND VACUUM BREAKER OUTLET TUBE FITTING. ROUTE TRAP PRIMER PIPING BELOW FLOOR TO PRIMER INLET ON FLOOR DRAIN TRAP.
2. BALANCE VALVE ASSEMBLY; SET AT 1.5 GPM. SEE DETAIL 4 ON SHEET P602.
3. BALANCE VALVE ASSEMBLY; SET AT 2 GPM. SEE DETAIL 4 ON SHEET P602.
4. PROVIDE HOSE BIBB, HB1. TO BE LOCATED UNDER THE RESTROOM LAVATORIES.

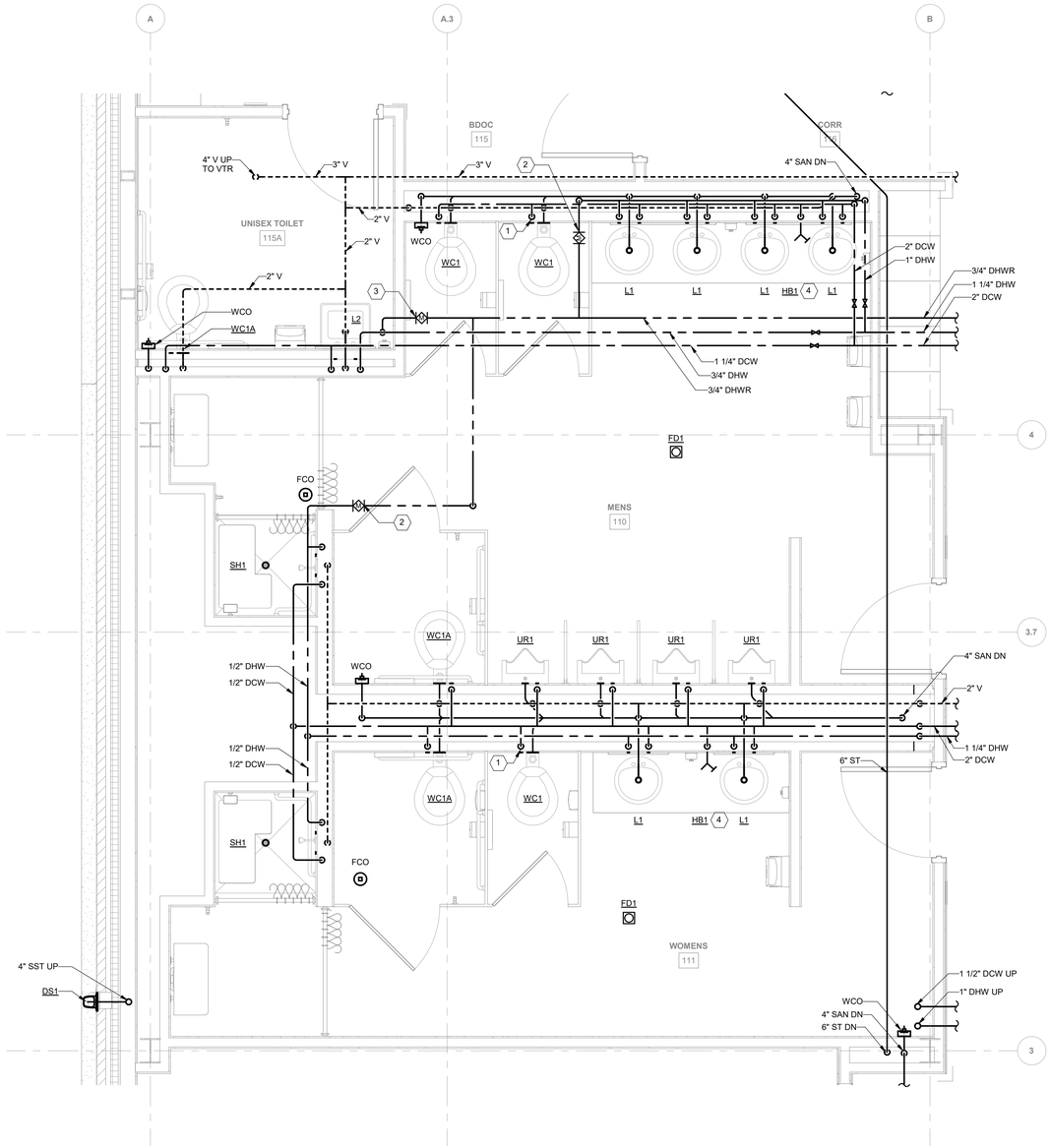

1 FIRST FLOOR PLUMBING PLAN - ENLARGED RESTROOM PLAN
P301 Scale: 1/2" = 1'-0"

AECOM

PROJECT

NEW SECURITY FORCES BUILDING

PAYNE BLVD.
CHARLOTTE, NORTH CAROLINA 28208

CLIENT

NORTH CAROLINA AIR NATIONAL GUARD - 145TH AIRLIFT WING

ARCHITECT/DESIGNER

AECOM

277 W NATIONWIDE BLVD
COLUMBUS, OH 43215
614-464-4500

www.aecom.com

CONSULTANTS

REGISTRATION

STATE OF OHIO
RENAE FOCHESATO
E-90911
REGISTERED
PROFESSIONAL ENGINEER

05-30-2025

KEY PLAN

ISSUE/REVISION

I/R	DATE	DESCRIPTION
	05-30-2025	B-3 SUBMITTAL - FINAL
	03-14-2025	B-2 SUBMITTAL
	09-29-2023	B-1 SUBMITTAL

PROJECT NUMBER

60637899

SHEET TITLE

PLUMBING ENLARGED PLANS

SHEET NUMBER

P301

Last Plotted: 5/22/2025 12:27:06 PM
Filename: BM 300-BP-AMER (USA) 60637899-SFNCANG145\60637899_SF-NC ANG_R21_P.rvt

Printed on ___% Post-Consumer Recycled Content Paper

©2023 AECOM Corporation

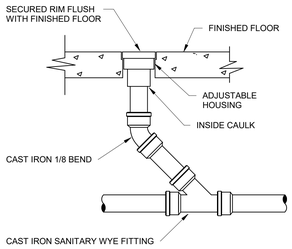

1 P601 — **FLOOR CLEANOUT DETAIL** — NTS

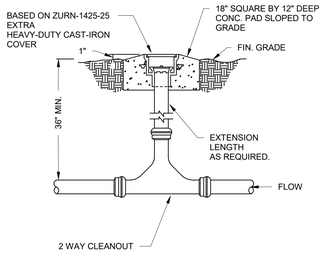

2 P601 — **TWO WAY GRADE CLEANOUT DETAIL** — NTS

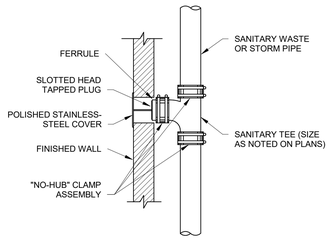

3 P601 — **WALL CLEANOUT DETAIL** — NTS

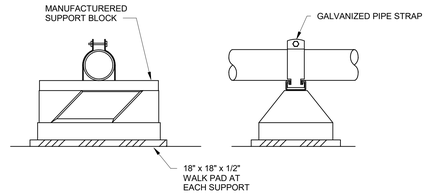

DETAIL NOTES:
1. INSTALLATION SHALL BE PER MANUFACTURERS RECOMMENDATIONS.
2. WOOD BLOCK SUPPORTS ARE NOT ACCEPTABLE.
3. BLACK IRON PIPING SHALL BE PAINTED; (PAINTING OF GALVANIZED PIPING IS NOT REQ'D)

4 P601 — **PIPE SUPPORT ON ROOF DETAIL** — NTS

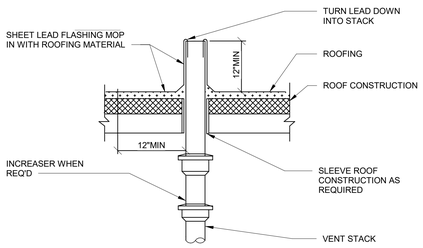

5 P601 — **VENT THROUGH ROOF DETAIL** — NTS

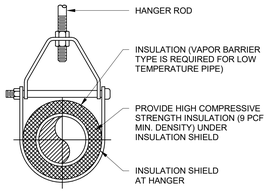

ADJUSTABLE CLEVIS HANGER
TYPE 1 - SEE SPECIFICATIONS

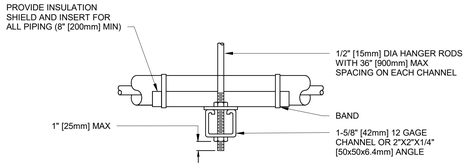

SIDE VIEW
TRAPEZE HANGER FOR UP
TO 1000 LB. UNIFORM LOAD

MAXIMUM PIPE/TUBING SUPPORT SPACING																			
NOM. SIZE	IN. (MM)	THRU 3/4 THRU (20)	1 (25)	1 1/4 (32)	1 1/2 (40)	2 (50)	2 1/2 (65)	3 (75)	4 (100)	5 (125)	6 (150)	8 (200)	10 (250)	12 (300)	14 (350)	16 (400)	18 (450)	20 (500)	24 (600)
PIPE	FT. (M)	7 (2.1)	7 (2.1)	7 (2.1)	9 (2.7)	10 (3.0)	11 (3.4)	12 (3.7)	14 (4.1)	16 (4.9)	17 (5.2)	19 (5.8)	22 (6.7)	23 (7.0)	25 (7.6)	27 (8.2)	28 (8.5)	30 (9.1)	32 (9.6)
TUBING	FT. (M)	5 FT 5 FT	6 (1.8)	7 (2.1)	8 (2.4)	8 (2.4)	9 (2.7)	10 (3.0)	12 (3.7)	13 (4.0)	14 (4.1)	16 (4.9)	- -	- -	- -	- -	- -	- -	- -
NOTE: FOR TRAPEZE HANGER TAKE SPACING OF SMALLEST SIZE ON TRAPEZE.																			

6 P601 — **PIPE HANGER DETAIL** — NTS

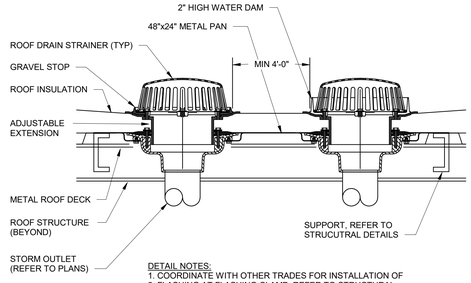

DETAIL NOTES:
1. COORDINATE WITH OTHER TRADES FOR INSTALLATION OF
2. FLASHING AT FLASHING CLAMP. REFER TO STRUCTURAL DRAWINGS FOR ADD'L REQUIREMENTS.
3. FASTEN METAL PAN TO ROOF DECK WITH SELF-TAPPING SCREWS IN ACCORDANCE WITH MFG'S INSTALLATION INSTRUCTIONS.
4. INSULATE DRAIN BODY AND PIPING.

7 P601 — **PRIMARY/SECONDARY ROOF DRAIN DETAIL** — NTS

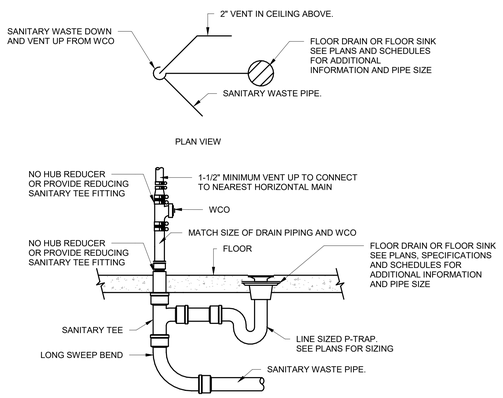

8 P601 — **FLOOR DRAIN OFFSET DETAIL** — NTS

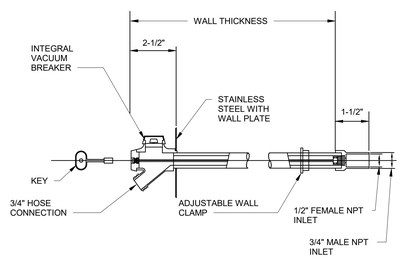

9 P601 — **EXPOSED NON-FREEZE WALL HYDRANT DETAIL** — NTS

AECOM

PROJECT
NEW SECURITY FORCES BUILDING
PAYNE BLVD.
CHARLOTTE, NORTH CAROLINA 28208

CLIENT
NORTH CAROLINA AIR NATIONAL GUARD - 145TH AIRLIFT WING

ARCHITECT/DESIGNER
AECOM
277 W NATIONWIDE BLVD
COLUMBUS, OH 43215
614-464-4500

www.aecom.com

CONSULTANTS

REGISTRATION

STATE OF OHIO
RENAE FOCHESATO
E-90911
REGISTERED
PROFESSIONAL ENGINEER
05-30-2025

KEY PLAN

ISSUE/REVISION

I/R	DATE	DESCRIPTION
	05-30-2025	B-3 SUBMITTAL - FINAL
	03-14-2025	B-2 SUBMITTAL
	09-29-2023	B-1 SUBMITTAL

PROJECT NUMBER
60637899

SHEET TITLE
PLUMBING DETAILS

SHEET NUMBER
P601

©2023 AECOM Corporation

Printed on ___% Post-Consumer Recycled Content Paper

12-PLUMBING-12.60-P601-PLUMBING DETAILS
Designer: Designer Checker: Checker Approved: Approver ARCH E1 30"x42"
Project Management Initials: MR
Last Plotted: 5/22/2025 12:27:06 PM
Filename: BM-300-BP-AMER (USA) 60637899-SFNCANGFHA5606378999_SF-NC ANG_R21_P.rvt

12-PLUMBING-12.60-P602-PLUMBING DETAILS
Project Management Initials: MR Designer: Designer Checked: Checker Approved: Approver/ARCH E1 30"x42"

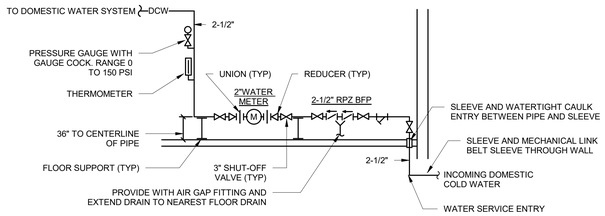

NOTES

1. INSTALL SUB-METER WITH BAS COMPATIBLE OUTPUTS. COORDINATE INTEGRATION OF SUB-METER INTO BAS WITH CONTROLS CONTRACTOR.
2. MAINTAIN 12" MIN. CLEARANCE FROM WALL.

1 BUILDING WATER SERVICE
P602 NTS

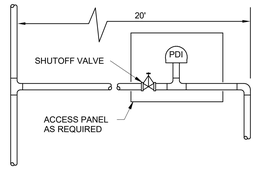

DETAIL NOTES:
1. FOR BRANCH LINES 20' OR LESS, INSTALL WATER HAMMER ARRESTER BETWEEN LAST TWO FISXTURES.
2. FOR BRANCH LINES OVER 20' TWO WATER HAMMER ARRESTER UNITS SHOULD BE USED. THE SECOND ONE PLACED AT THE MIDPOINT OF THE LINE.

WATER HAMMER ARRESTER SCHEDULE						
PDI *	A	B	C	D	E	F
FIXTURE UNITS	1-11	12-32	33-60	61-113	114-154	155-330
PIPE SIZE	3/4"	1"	1"	1"	1"	1"

* PDI = PLUMBING AND DRAINAGE INSTITUTE.

2 WATER HAMMER ARRESTER DETAIL
P602 NTS

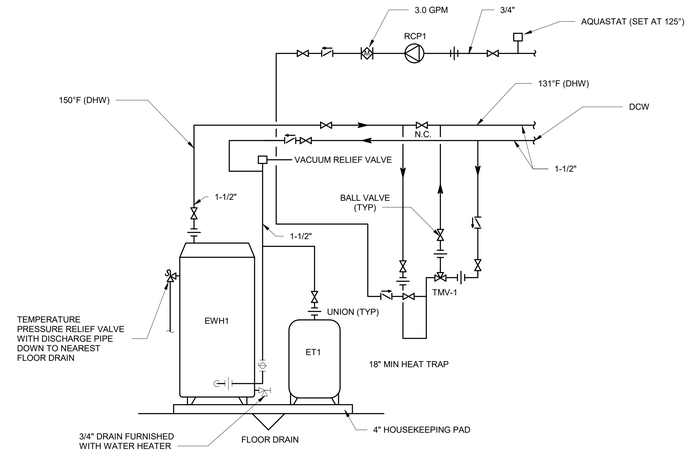

3 ELECTRIC WATER HEATER DETAIL
P602 NTS

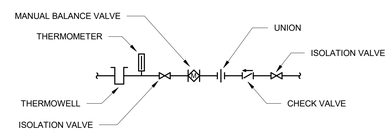

4 MAUAL BALANCE VALVE ASSEMBLY DETAIL
P602 NTS

AECOM

PROJECT
NEW SECURITY FORCES BUILDING
PAYNE BLVD.
CHARLOTTE, NORTH CAROLINA 28208

CLIENT
NORTH CAROLINA AIR NATIONAL GUARD - 145TH AIRLIFT WING

ARCHITECT/DESIGNER
AECOM
277 W NATIONWIDE BLVD
COLUMBUS, OH 43215
614-464-4500

www.aecom.com

CONSULTANTS

REGISTRATION

STATE OF OHIO
RENAE FOCHESATO
E-90911
REGISTERED
PROFESSIONAL ENGINEER
05-30-2025

KEY PLAN

ISSUE/REVISION

I/R	DATE	DESCRIPTION
	05-30-2025	B-3 SUBMITTAL - FINAL
	03-14-2025	B-2 SUBMITTAL
	09-29-2023	B-1 SUBMITTAL

PROJECT NUMBER
60637899

SHEET TITLE
PLUMBING DETAILS

SHEET NUMBER
P602

Last Plotted: 5/22/2025 12:27:08 PM
Filename: BM 360-JBP-AMER (USA)\60637899-SFNCANG\145\60637899_SF-NC ANG_R21_P.rvt
Printed on ___% Post-Consumer Recycled Content Paper
©2023 AECOM Corporation

PROJECT SCHEDULE NOTES

1	PROVIDE WITH BACNET IP CARD.
2	PROVIDE BMS INTERFACE TO MONITOR TRENDING OF TEMPERATURES, STATUS, AND ALARMS.
3	PROVIDE WATER HAMMER ARRESTOR AT SUPPLY DROP.
4	PROVIDE DISCONNECT SWITCH.
5	PROVIDE WITH ASSE 1072 TRAP SEAL PROTECTOR.
6	FAUCET SHALL BE WATERSENSE CERTIFIED.
7	FLUSH VALVE SHALL BE WATERSENSE CERTIFIED.
8	
9	
10	

PROJECT SCHEDULE NOTES

11	
12	
13	
14	
15	
16	
17	
18	
19	
20	

PROJECT SCHEDULE NOTES

21	
22	
23	
24	
25	
26	
27	
28	
29	
30	

PROJECT SCHEDULE NOTES

31	
32	
33	
34	
35	
36	
37	
38	
39	
40	

PLUMBING FIXTURE SCHEDULE

UNIT DATA			BASIS OF DESIGN		BASIS OF DESIGN TRIM		BASIS OF DESIGN SUPPLY/STOP		BASIS OF DESIGN P-TRAP		BASIS OF DESIGN MISC		ROUGH-IN SIZES (IN)				
TAG	FUNCTION	DESCRIPTION	MANUFACTURER	MODEL	MANUFACTURER	MODEL	MANUFACTURER	MODEL	MANUFACTURER	MODEL	MANUFACTURER	MODEL	DCW	DHW	SAN	V	SCHEDULE NOTES
EW1	EYE WASH	WALL-MOUNT EMERGENCY EYE/FACE WASH, ALL STAINLESS STEEL, MEETS ANSI/ISEA Z358.1 SPECIFICATIONS, SELF DRAINING, FULLY-ASSEMBLED.	BRADLEY	S19224SS									1"		2"	1"	
EWC1	WATER COOLER	ELECTRIC WATER COOLER – ADA ACCESSIBLE – DOUBLE BOWL: WALL MOUNTED BARRIER FREE BI-LEVEL COOLERS WITH BOTTLE FILLING STATION, FRONT PUSH BUTTON OPERATION; HEAVY GAUGE STAINLESS STEEL, INTERNAL WATER FILTER UNIT TO PROVIDE MINIMUM 8 GPH OF 50°F WATER WITH 90°F AMBIENT AND 80°F SUPPLY WATER TEMPERATURE, VINYL FINISH. SUPPLY: ½" OD X 3/8" OD, WHEEL HANDLE STOP. TRAP: 1 ¼"X 1 ½", 17 GAUGE ADJUSTABLE TRAP WITH CLEANOUT, CHROME FINISH.	ELKAY	VRCGRNTL8WSK			MCGUIRE	165LK	MCGUIRE	8902			1/2"		2"	1 1/2"	
L1	LAVATORY	20"x18" VITREOUS CHINA COUNTERTOP LAVATORY WITH 8" ON CENTER SINGLE LEVER FAUCET WITH POP UP DRAIN. CONCEAL ARM CARRIER AND ADA UNDER SINK PIPE ENCLOSURE SHROUD. ADA COMPLIANT INSTALLATION. 0.35 GPM.	AMERICAN STANDARD	0475.020	CHICAGO	420-PEO2805ABCP	MCGUIRE	165LK	INTEGRAL	8902			1/2"	1/2"	1 1/2"	1 1/2"	6
L2	LAVATORY	20"x18" VITREOUS CHINA WALL HUNG LAVATORY WITH 4" ON CENTER SINGLE LEVER FAUCET WITH POP UP DRAIN. CONCEAL ARM CARRIER AND ADA UNDER SINK PIPE ENCLOSURE SHROUD. ADA COMPLIANT INSTALLATION. 0.35 GPM.	AMERICAN STANDARD	0355.012	CHICAGO	420-PEO2805ABCP	MCGUIRE	165LK	MCGUIRE	8902			1/2"	1/2"	1 1/2"	1 1/2"	6
MB1	MOP SINK	MOLDED STONE 24"x24" BASIN ONE-PIECE, DRAIN WITH BODY AND STRAINER, STAINLESS STEEL CAPS, COMBINATION SERVICE SINK FITTING WITH VACUUM BREAKER, ¾" HOSE THREADS ON SPOUT, 4 ARM HANDLES WITH ADJUSTABLE WALL BRACE, PAIL HOOK, AND ½" FLANGED FEMALE ADJUSTABLE ARMS WITH INTEGRAL STOPS, POLISHED CHROME PLATED, MOP HANGER WITH 3 SPRING-LOADED RUBBER GRIPS, 30" RUBBER HOSE WITH ¾" CHROME COUPLING AND 302 STAINLESS STEEL BRACKET WITH SPRING-LOADED RUBBER GRIP.	FIAT	MSB2424	CHICAGO	897					FIAT	MSBIDTG2424	1/2"	1/2"	3"	1 1/2"	6
S1	SINK	20" X 18"SINGLE BOWL 18-GAUGE STAINLESS STEEL UNDERMOUNT SINK, FAUCET: MANUAL WING BLADE, 4" CENTERS, WATERSENSE CERTIFIED, 1.5 GPM FLOW RESTRICTOR AND ASSE 1070 THERMOSTATIC MIXING VALVE. SUPPLY: ½" OD X 3.8" OD ANGLE SUPPLY, LOOSE KEY STOP, WALL FLANGE, CHROME PLATED. TRAP: 1-1/4" X 1-1/2", 17 GAUGE ADJUSTABLE TRAP WITH CLEANOUT AND WALL FLANGE, CHROME FINISH. DRAIN: 1-1/4", 17 GAUGE OFFSET DRAIN WITH OPEN GRID STRAINER, CHROME PLATED. INSULATION KIT: SELF-FASTENING, VINYL INSULATION COVERS FOR DRAIN, TRAPS AND SUPPLY PIPING WITH ACCESSIBLE ANGLE VALVE INSULATION COVER, WHITE.	AMERICAN STANDARD	18SB.252283.073	CHICAGO	2301-ABCP	MCGUIRE	165LK	MCGUIRE	8902	INSINKERATOR	EVOLUTION	1/2"	1/2"	1 1/2"	1 1/2"	6
SH1	SHOWER	40"x38" ADA ACCESSIBLE SHOWER BASE WITH ADDITIONAL GRAB BARS, FOLD UP SEAT AND TILE SHOWER STALL BY OTHERS. 24" GRAB BAR FOR 1.5 GPM HAND HELP SHOWER, ASSE 1016 PRESSURE BALANCING VALVE.	FLORSTONE	400-4038	CHICAGO	152-LADCP					MCGUIRE	1266AV	1/2"	1/2"	2"	1 1/2"	
UR1	URINAL	WHITE VITREOUS CHINA, WASHOUT, WALL-HUNG AT 24", ¾" TOP SPUD, PRIVACY SHIELDS, 2" BACK OUTLET AND SUPPORTING BOLTS. FLUSH VALVE: DIAPHRAGM TYPE WITH VACUUM BREAKER, FLUSH CONNECTION AND SPUD COUPLING FOR ¾" TOP SPUD, ¼" SCREWDRIVER BACK CHECK ANGLE STOP. 0.125 GALLON MANUAL FLUSH.	AMERICAN STANDARD	6501.010	SLOAN	186-0.125	INTEGRAL	INTEGRAL	INTEGRAL	INTEGRAL			3/4"		2"	1 1/2"	7
WC1	WATER CLOSET	SIPHON-JET, WALL-HUNG, ELONGATED BOWL, WHITE VITREOUS CHINA, 1-1/2" TOP SPUD. FLUSH VALVE: DIAPHRAGM-TYPE WITH VACUUM BREAKER, FLUSH CONNECTION AND SPUD COUPLING FOR 1-1/2" TOP, 1": SCREWDRIVER BACK CHECK ANGLE STOP, 1.28 GALLON MANUAL FLUSH. SEAT: OPEN FRONT SEAT FOR ELONGATED BOWL, STAINLESS STEEL HINGE WITH CHECK, COLOR WHITE.	AMERICAN STANDARD	2257.103	SLOAN	111-1.28	INTEGRAL	INTEGRAL	INTEGRAL	INTEGRAL	CHURCH	9500C	1"		4"	2"	7
WC1A	WATER CLOSET	SIPHON-JET, WALL-HUNG, ELONGATESIPHON-JET, WALL-HUNG, ELONGATED BOWL, WHITE VITREOUS CHINA, 1-1/2" TOP SPUD. FLUSH VALVE: DIAPHRAGM-TYPE WITH VACUUM BREAKER, FLUSH CONNECTION AND SPUD COUPLING FOR 1-1/2" TOP, 1": SCREWDRIVER BACK CHECK ANGLE STOP, 1.28 GALLON MANUAL FLUSH. SEAT: OPEN FRONT SEAT FOR ELONGATED BOWL, STAINLESS STEEL HINGE WITH CHECK, COLOR WHITE.AT: OPEN F	AMERICAN STANDARD	2257.103	SLOAN	111-1.28	INTEGRAL	INTEGRAL	INTEGRAL	INTEGRAL	CHURCH	9500C	1"		4"	2"	7

PLUMBING SPECIALTIES SCHEDULE

UNIT DATA			BASIS OF DESIGN		
TAG	FUNCTION	DESCRIPTION	MANUFACTURER	MODEL	SCHEDULE NOTES
DS1	DOWNSPOUT	DOWNSPOUT COVER, ROUND FABRICATED STAINLESS STEEL FRAME WITH FABRICATED SECURED PERFORATED STAINLESS STEEL HINGED STRAINER.	ZURN	Z199-DC	
FD1	FLOOR DRAIN	PROVIDE WITH ADJUSTABLE CAST IRON BODY, SQUARE STAINLESS STEEL TOP FOR FINISHED FLOORS. PROVIDE WITH 1/2" TRAP PRIMER INLET.	ZURN	ZS415SS	
FD2	FLOOR DRAIN	PROVIDE WITH ADJUSTABLE CAST IRON BODY, ROUND BRONZE TOP FOR FINISHED FLOORS. PROVIDE WITH 1/2" TRAP PRIMER INLET.	ZURN	Z505	5
HB1	HOSE BIBB	3/4" INLET, BRONZE, EXPOSED, ANTI-SIPHON HOSE BIBB WITH VACUUM BREAKER AND HOSE CONNECTION.	ZURN	Z1341	
OFD1	OVERFLOW DRAIN	8-3/8" DIAMETER OVERFLOW ROOF DRAIN, LOW SILHOUETTE DOME, DURA-COATED CAST IRON BODY WITH COMBINATION MEMBRANE FLASHING CLAMP/GRAVEL GUARD AND LOW SILHOUETTE POLY-DOME. WITH INSIDE CAULK STYLE CONNECTION, 4" CONNECTION.	ZURN	Z125-4-IC89	
RD1	ROOF DRAIN	15" DIAMETER OVERFLOW ROOF DRAIN, LOW SILHOUETTE DOME, DURA-COATED CAST IRON BODY WITH COMBINATION MEMBRANE FLASHING CLAMP/GRAVEL GUARD AND LOW SILHOUETTE POLY-DOME. WITH INSIDE CAULK STYLE CONNECTION, 6" CONNECTION.	ZURN	Z100-6-IC	
RD2	ROOF DRAIN	8-3/8" DIAMETER ROOF DRAIN, LOW SILHOUETTE DOME, DURA-COATED CAST IRON BODY WITH COMBINATION MEMBRANE FLASHING CLAMP/GRAVEL GUARD AND LOW SILHOUETTE POLY-DOME. WITH INSIDE CAULK STYLE CONNECTION, 4" CONNECTION.	ZURN	Z125-4-IC	
WH1	WALL HYDRANT	EXPOSED ANTI-SIPHON WITH VACUUM BREAKER STAINLESS STEEL FACE AND LOOSE KEY.	ZURN	Z1310	3

ELECTRIC WATER HEATER SCHEDULE

UNIT DATA		BASIS OF DESIGN		PERFORMANCE DATA			ELECTRICAL DATA				
TAG	FUNCTION	MANUFACTURER	MODEL	STORAGE CAPACITY (GAL)	RECOVERY @ 100°F RISE (GAL/HR)	WATER CONNECTION (IN)	FLA	CAPACITY (KW)	VOLTS	PHASE	SCHEDULE NOTES
EWH1	DOMESTIC WATER HEATING	A.O. Smith	DSE-40	50.0	98.0	0.75	29	24.0	480	3	1, 4

EXPANSION TANK SCHEDULE

UNIT DATA		BASIS OF DESIGN		PERFORMANCE DATA				
TAG	FUNCTION	MANUFACTURER	MODEL	TANK VOLUME (GAL)	MAX ACCEPTANCE VOLUME (GAL)	AIR PRECHARGE (PSIG)	CONNECTION SIZE (IN)	SCHEDULE NOTES
ET1	DOMESTIC COLD WATER	AMTROL	ST-35CL	10.0	10.0	25.0	1"	

PUMP SCHEDULE

UNIT DATA			BASIS OF DESIGN		PERFORMANCE DATA					MOTOR DATA							GENERAL DATA		
TAG	LOCATION	FUNCTION	MANUFACTURER	MODEL	PUMP TYPE	FLUID TYPE	FLOW (GPM)	EXT WPD (FT HD)	EWT (°F)	HP	RPM	PHASE	VOLTS	FLA	VFD	EMERGENCY POWER	REDUNDANT	WEIGHT (LBS)	SCHEDULE NOTES
ESP1	ELEVATOR PIT	SUMP PUMP	ZOELLER	153	SUMERSIBLE	WATER	50.0	15.0	60.0	0.50	3450	1	120	10.5	No	No	No	35	
RCP1	MECHANICAL ROOM	DHW RECIRCULATION	TACO	0034E-F2	INLINE	WATER	5.0	14.0	125.0	0.25	1250	1	120	1.5	No	No	No	11	

THERMOSTATIC MIXING VALVE SCHEDULE

UNIT DATA			BASIS OF DESIGN		PERFORMANCE DATA				GENERAL DATA		ELECTRICAL DATA		
TAG	LOCATION	FUNCTION	MANUFACTURER	MODEL	MIN FLOW (GPM)	MAX FLOW	WPD (PSI)	LWT (°F)	INLET SIZE (IN)	OUTLET SIZE (IN)	PHASE	VOLTS	SCHEDULE NOTES
TMV1	MECHANICAL ROOM	DWH MIXING	ARMSTRONG	DMC25	5.0	48.0	5.00	130.0	1"	1"	1	120	2

AECOM

PROJECT

NEW SECURITY FORCES BUILDING

PAYNE BLVD.
CHARLOTTE, NORTH CAROLINA 28208

CLIENT

NORTH CAROLINA AIR NATIONAL GUARD - 145TH AIRLIFT WING

ARCHITECT/DESIGNER

AECOM

277 W NATIONWIDE BLVD
COLUMBUS, OH 43215
614-464-4500

www.aecom.com

CONSULTANTS

REGISTRATION

STATE OF OHIO
RENAE FOCHESATO
E-90911
REGISTERED
PROFESSIONAL ENGINEER

05-30-2025

KEY PLAN

ISSUE/REVISION

I/R	DATE	DESCRIPTION
	05-30-2025	B-3 SUBMITTAL - FINAL
	03-14-2025	B-2 SUBMITTAL
	09-29-2023	B-1 SUBMITTAL

PROJECT NUMBER

60637899

SHEET TITLE

PLUMBING SCHEDULES

SHEET NUMBER

P701

©2023 AECOM Corporation

12-PLUMBING-12-70-P701-PLUMBING SCHEDULES
Designer: Designer Checked: Checker Approved: Approver/ARCH E1 30"x42"
Project Management Initials: MR
Last Plotted: 5/22/2025 12:27:07 PM
Filename: BM 300-BF-AMER (USA) 60637899-SFHC/ANG/145#60637899_SF-NC ANG_R21_P.rvt

Printed on ___% Post-Consumer Recycled Content Paper

12-PLUMBING-12.80-P801-PLUMBING STACK DIAGRAM
Project Management Initials: MR Designer: Designer Checked: Checker Approved: Approver ARCH E1 30"x42"

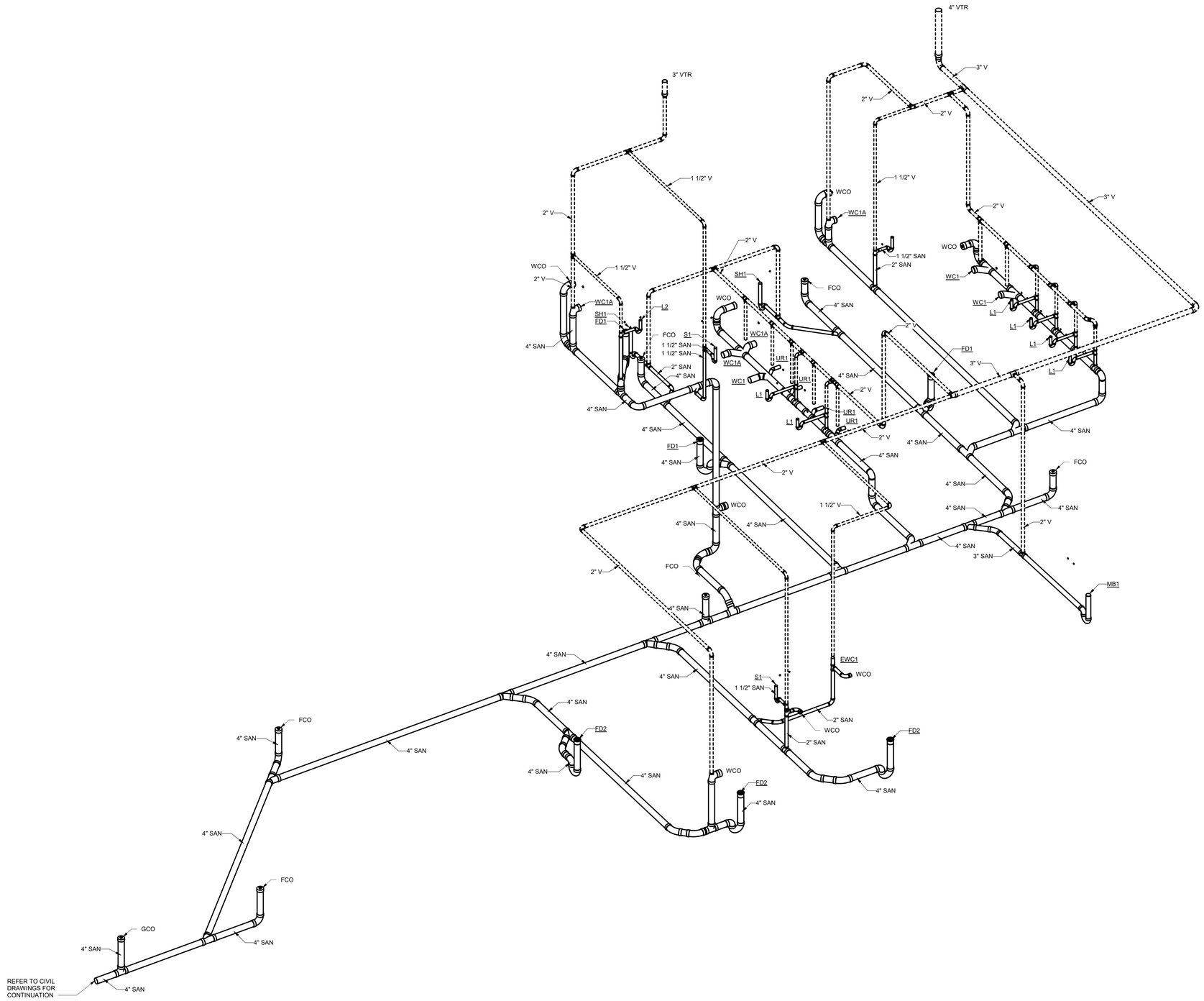

1 | **SANITARY STACK**
P801 | Scale: 3/8" = 1'-0"

Last Plotted: 5/22/2025 12:27:08 PM
Filename: BM 360-JBP-AMER (USA)\60637899-SFNCANG\145\60637899_SF-NC ANG_R21_P.rvt

Printed on ___% Post-Consumer Recycled Content Paper

AECOM

PROJECT

NEW SECURITY FORCES BUILDING

PAYNE BLVD.
CHARLOTTE, NORTH CAROLINA 28208

CLIENT

NORTH CAROLINA AIR NATIONAL GUARD - 145TH AIRLIFT WING

ARCHITECT/DESIGNER

AECOM

277 W NATIONWIDE BLVD
COLUMBUS, OH 43215
614-464-4500

www.aecom.com

CONSULTANTS

REGISTRATION

STATE OF OHIO
RENAE FOCHESATO
E-90911
REGISTERED
PROFESSIONAL ENGINEER

05-30-2025

KEY PLAN

ISSUE/REVISION

I/R	DATE	DESCRIPTION
	05-30-2025	B-3 SUBMITTAL - FINAL
	03-14-2025	B-2 SUBMITTAL
	09-29-2023	B-1 SUBMITTAL

PROJECT NUMBER

60637899

SHEET TITLE

PLUMBING STACK DIAGRAM

SHEET NUMBER

P801

©2023 AECOM Corporation

12-PLUMBING-12.80-P802-DOMESTIC RISER DIAGRAM
Project Management Initials: MR Designer: Designer Checked: Checker Approved: ApproverARCH E1 30"x42"

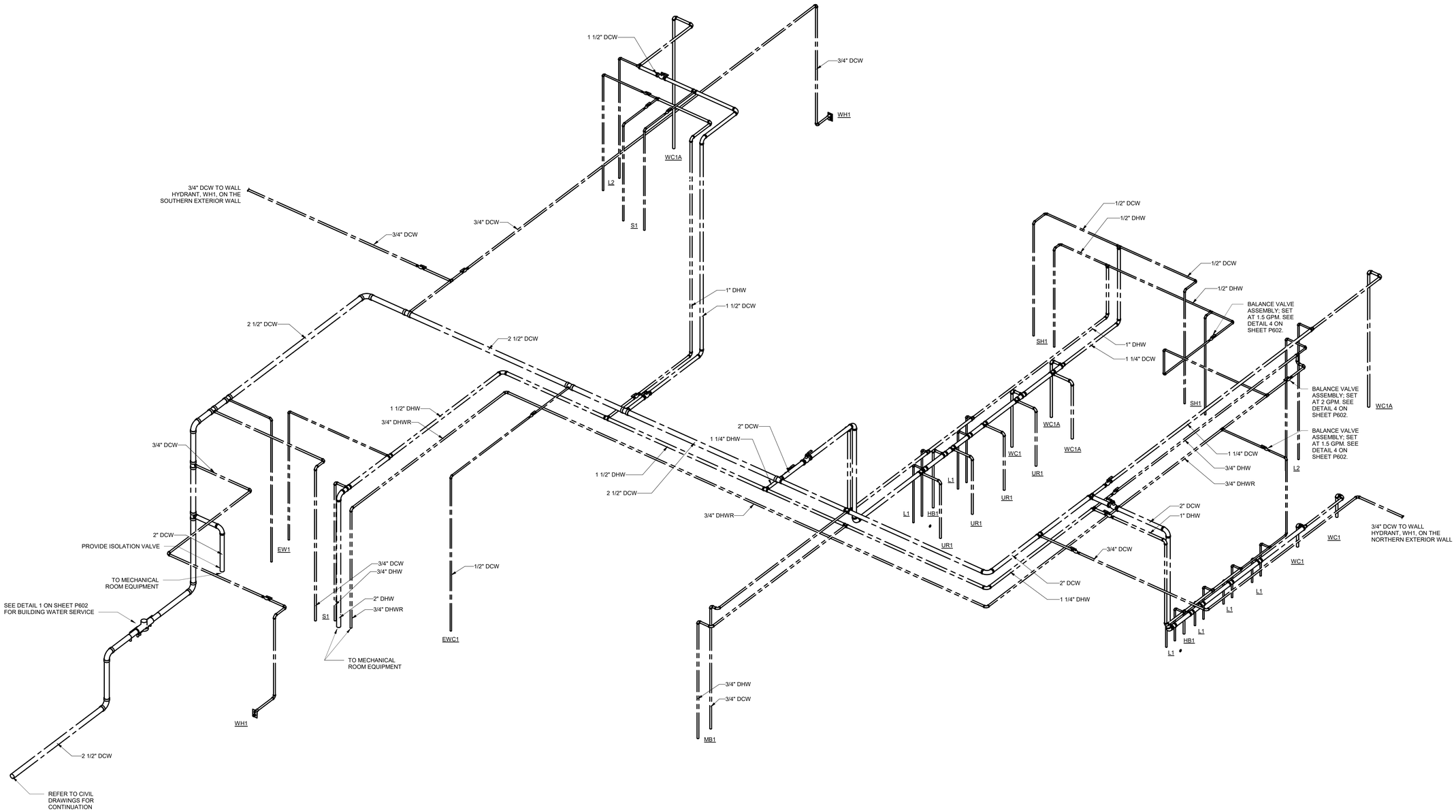

1 DOMESTIC RISER
P802 Scale: 1/2" = 1'-0"

AECOM

PROJECT
NEW SECURITY FORCES BUILDING
PAYNE BLVD.
CHARLOTTE, NORTH CAROLINA 28208

CLIENT
NORTH CAROLINA AIR NATIONAL GUARD - 145TH AIRLIFT WING

ARCHITECT/DESIGNER
AECOM
277 W NATIONWIDE BLVD
COLUMBUS, OH 43215
614-464-4500

www.aecom.com

CONSULTANTS

REGISTRATION

STATE OF OHIO
RENAE FOCHESATO
E-90911
REGISTERED
PROFESSIONAL ENGINEER
05-30-2025

KEY PLAN

ISSUE/REVISION

I/R	DATE	DESCRIPTION
	05-30-2025	B-3 SUBMITTAL - FINAL
	03-14-2025	B-2 SUBMITTAL
	09-29-2023	B-1 SUBMITTAL

PROJECT NUMBER
60637899

SHEET TITLE
DOMESTIC RISER DIAGRAM

SHEET NUMBER
P802

Last Plotted: 5/27/2025 11:15:03 AM
Filename: BM-360-BP-AMER (USA)\60637899-SFNCANG\145\60637899_SF-NC ANG_R21_P.rvt

Printed on ___% Post-Consumer Recycled Content Paper

©2023 AECOM Corporation

MECHANICAL ABBREVIATIONS

NOTE: NOT ALL ABBREVIATIONS MAY BE USED.

ABBREVIATION	DESCRIPTION
(D)	EXISTING TO BE DEMOLISHED
(E)	EXISTING TO REMAIN
(F)	FUTURE
AFF	ABOVE FINISHED FLOOR
AI	ANALOG INPUT
AMB	AMBIENT
AO	ANALOG OUTPUT
APD	AIR PRESSURE DROP
AV	ANALOG VALUE
AVG	AVERAGE OR AVERAGING
BAS	BUILDING AUTOMATION SYSTEM
BFP	BACKFLOW PREVENTOR
BHP	BRAKE HORSEPOWER
BI	BINARY INPUT
BLDG	BUILDING
BO	BINARY OUTPUT
BOB	BOTTOM OF BEAM
BOD	BOTTOM OF DUCT
BOP	BOTTOM OF PIPE
BOS	BOTTOM OF STRUCTURE
BTUH	BRITISH THERMAL UNITS PER HOUR
BV	BINARY VALUE
CFM	CUBIC FEET PER MINUTE
CL	CENTER LINE
CO	CLEAN OUT
COMPR	COMPRESSOR
COP	COEFFICIENT OF PERFORMANCE
CV	CONSTANT VOLUME
DB	DRY BULB
DIA	DIAMETER
DN	DOWN
EAT	ENTERING AIR TEMPERATURE
ECM	ELECTRONICALLY COMMUTATED MOTORS
EER	ENERGY EFFICIENCY RATIO
EFF	EFFICIENCY
EG	ETHYLENE GLYCOL
ESP	EXTERNAL STATIC PRESSURE
EWT	ENTERING WATER TEMPERATURE
FLA	FULL LOAD AMPS
FPI	FINS PER INCH
FPM	FEET PER MINUTE
FPS	FEET PER SECOND
FT	FEET
GAL	GALLONS
GPM	GALLONS PER MINUTE
HD	HEAD
HP	HORSEPOWER
ID	INNER DIAMETER
IPLV	INTEGRATED PART LOAD VALUE
KW	KILOWATTS
LAT	LEAVING AIR TEMPERATURE
LWT	LEAVING WATER TEMPERATURE
MBH	THOUSAND BTUH
MCA	MINIMUM CIRCUIT AMPACITY
MFR	MANUFACTURER
MI	MULTISTATE INPUT
MO	MULTISTATE OUTPUT
MOCP	MAXIMUM OVERCURRENT PROTECTION
N/A	NOT APPLICABLE
NC	NORMALLY CLOSED
NO	NORMALLY OPEN
NOX	NITROUS OXIDE
NPLV	NON-STANDARD PART LOAD VALUE
NPSH	NET POSITIVE SUCTION HEAD
NTS	NOT TO SCALE
OD	OUTSIDE DIAMETER
PD	PRESSURE DROP
PG	PROPYLENE GLYCOL
PPH	POUNDS PER HOUR
PPM	PARTS PER MILLION
PRV	PRESSURE REDUCING VALVE
PSI	POUNDS PER SQUARE INCH
REFRIG	REFRIGERANT
RH	RELATIVE HUMIDITY
RPM	REVOLUTIONS PER MINUTE
SEER	SEASONAL ENERGY EFFICIENCY RATIO
SP	STATIC PRESSURE
TSP	TOTAL STATIC PRESSURE
TYP	TYPICAL
UNO	UNLESS NOTED OTHERWISE
VAV	VARIABLE AIR VOLUME
VFD	VARIABLE FREQUENCY DRIVE
VOC	VOLATILE ORGANIC COMPOUNDS
VRF	VARIABLE REFRIGERANT FLOW
VRV	VARIABLE REFRIGERANT VOLUME
W	WATTS
WB	WET BULB
WG	WATER GAUGE
WPD	WATER PRESSURE DROP

MECHANICAL SYSTEM TYPES AND ABBREVIATIONS

NOTE: NOT ALL ABBREVIATIONS MAY BE USED.

ABBREVIATION	DESCRIPTION
CHR	CHILLED WATER RETURN
CHS	CHILLED WATER SUPPLY
CWR	CONDENSER WATER RETURN
CWS	CONDENSER WATER SUPPLY
D	DRAIN
EA	EXHAUST AIR
GR	GEOTHERMAL RETURN
GS	GEOTHERMAL SUPPLY
HR	HEAT PUMP RETURN
HS	HEAT PUMP SUPPLY
HWR	HEATING HOT WATER RETURN
HWS	HEATING HOT WATER SUPPLY
L	LOUVER
MW	MAKEUP WATER - GENERIC
OA	OUTDOOR AIR
PC	PUMPED CONDENSATE
R	REFRIGERANT
RA	RETURN AIR
REL	RELIEF AIR
SA	SUPPLY AIR
V	VENT

MECHANICAL SYMBOLS LIST

NOTE: NOT ALL SYMBOLS MAY BE USED.

SYMBOL	DESCRIPTION
1	KEYNOTE (SEE LEGEND ON SHEET)
	AIRFLOW ARROW
	FLOW ARROW
	CONNECT TO EXISTING
	END OF DEMOLITION
	PIPE CAPPED
	PIPE DROP
	PIPE RISE
	PIPE TEE DOWN
	PIPE REDUCER
	PIPE UNION
	PIPE GUIDES OR SLEEVES
	PIPE ANCHOR
	FLEXIBLE PIPE CONNECTION
	GENERAL SERVICE VALVE (SEE SPECIFICATIONS FOR VALVE TYPE PER APPLICATION)
	CHECK VALVE (ARROW INDICATES DIRECTION OF FLOW)
	MANUAL BALANCING VALVE
	AUTOMATIC BALANCING VALVE
	TWO-WAY CONTROL VALVE
	THREE-WAY CONTROL VALVE
PICBV	TWO-WAY PRESSURE INDEPENDENT CONTROL AND BALANCE VALVE
	PRESSURE REDUCING VALVE
	STEAM PRESSURE REGULATING VALVE
	RELIEF VALVE
	DRAIN VALVE WITH THREADED HOSE CONNECTION
	REDUCED PRESSURE BACKFLOW PREVENTER
	PRESSURE GAUGE WITH STOPCOCK
	STRAINER WITH BLOW DOWN VALVE
AV	AUTOMATIC AIR VENT
MAV	MANUAL AIR VENT
	TEMPERATURE/PRESSURE TEST PLUG (PETE'S PLUG)
	SIGHT FLOW INDICATOR
	STEAM TRAP
CO CO	CLEAN OUT
	FLOW METER
	THERMOMETER
	PITCH DOWN IN DIRECTION OF ARROW
H	HUMIDISTAT WITH ADJUSTABLE CONTROL
T	THERMOSTAT WITH ADJUSTABLE CONTROL
H	HUMIDITY SENSOR
T	TEMPERATURE SENSOR
HZ	HYDROGEN SENSOR
CO2	CARBON DIOXIDE SENSOR
CO	CARBON MONOXIDE SENSOR
NO2	NITROGEN DIOXIDE SENSOR
OS	OCCUPANCY SENSOR

MECHANICAL SYMBOLS LIST CONT.

NOTE: NOT ALL SYMBOLS MAY BE USED.

SYMBOL	DESCRIPTION
	SUPPLY DIFFUSER WITH FLEXIBLE DUCT TAG - NECK SIZE AIRFLOW (CFM) TAG EXAMPLE: S1-6ø / 100
	SUPPLY DIFFUSER TAG - NECK SIZE AIRFLOW (CFM) TAG EXAMPLE: S1-6ø / 100
	RETURN/EXHAUST GRILLE TAG AIRFLOW (CFM) TAG EXAMPLE: R1 / 500; E1 / 500
	SIDEWALL SUPPLY DIFFUSER TAG - NECK SIZE AIRFLOW (CFM) TAG EXAMPLE: S2-12x8 / 100
	SIDEWALL RETURN/EXHAUST GRILLE TAG AIRFLOW (CFM) TAG EXAMPLE: R2 / 100; E2 / 100
BDD	DAMPERS/DUCT ACCESSORIES BDD: BACKDRAFT DAMPER FSD: FIRE/SMOKE DAMPER FD: FIRE DAMPER MD: MOTORIZED DAMPER SD: SMOKE DAMPER VD: VOLUME DAMPER SB: SECURITY BARS
	SUPPLY AND OUTDOOR AIR RECTANGULAR DUCT ELBOW UP OVAL DUCT ELBOW UP ROUND DUCT ELBOW UP
	RETURN, RELIEF, AND EXHAUST AIR RECTANGULAR DUCT ELBOW UP OVAL DUCT ELBOW UP ROUND DUCT ELBOW UP
	SUPPLY AND OUTDOOR AIR RECTANGULAR DUCT ELBOW DOWN OVAL DUCT ELBOW DOWN ROUND DUCT ELBOW DOWN
	RETURN, RELIEF, AND EXHAUST AIR RECTANGULAR DUCT ELBOW DOWN OVAL DUCT ELBOW DOWN ROUND DUCT ELBOW DOWN
	NEW WORK DUCTWORK
	EXISTING DUCTWORK
	DEMOLITION DUCTWORK
	NEW WORK PIPING
	EXISTING PIPING
	DEMOLISHED PIPING
	NEW WORK MECHANICAL EQUIPMENT (WITH CLEARANCE SHOWN)
	EXISTING MECHANICAL EQUIPMENT
	DEMOLISHED MECHANICAL EQUIPMENT
	GENERIC FAN
	GENERIC PUMP
	ACCESS DOOR
	TERMINAL BOXES VAV TERMINAL BOX (WITH REHEAT) VAV TERMINAL BOX (NO REHEAT)
	TERMINAL BOX NOTES 1. IF MIN COOLING CFM IS NOT SHOWN ON PLANS, THEN MIN COOLING CFM IS EQUAL TO 65% OF MAX COOLING CFM. 2. HEATING CFM IS EQUAL TO MIN COOLING CFM.
	DUCTWORK PLANS TAG MAX COOLING CFM / MIN COOLING CFM
	PIPING PLANS TAG
	TAG EXAMPLES: DUCTWORK PLANS: TB1 / 500/200; TB1 / 500; PIPING PLANS: TB1

MECHANICAL CONTROLS SYMBOLS LIST

NOTE: NOT ALL SYMBOLS MAY BE USED.

SYMBOL	DESCRIPTION
AF	AIR FLOW MEASURING DEVICE
AS	AIR SWITCH
CT	CONDUCTIVITY TRANSMITTER
CS	CURRENT SENSOR
DP	DIFFERENTIAL PRESSURE TRANSMITTER
EPT	ELECTRONIC PNEUMATIC TRANSDUCER
ES	END SWITCH
FM	FLOW METER
HOA	HAND-OFF-AUTO SWITCH
LT	LEVEL TRANSMITTER
M	METER
PHT	PH TRANSMITTER
PS	PRESSURE SWITCH
PT	PRESSURE TRANSMITTER
SD	SMOKE DETECTOR
	STARTER
TS	TEMPERATURE SWITCH
VFD	VARIABLE FREQUENCY DRIVE
VT	VIBRATION TRANSMITTER
FS	WATER FLOW SWITCH
VOC	VOC SENSOR

MECHANICAL SHEET INDEX

SHEET NUMBER	SHEET TITLE
M001	GENERAL INFORMATION - HVAC
M002	HVAC ZONING PLANS
M101	FIRST FLOOR HVAC DUCTWORK PLAN
M102	SECOND FLOOR HVAC DUCTWORK PLAN
M401	HVAC SECTIONS
M601	HVAC DETAILS
M602	HVAC DETAILS
M701	HVAC SCHEDULES
M801	HVAC SEQUENCE OF OPERATIONS
M802	HVAC SEQUENCE OF OPERATIONS

MECHANICAL GENERAL NOTES

1. INSTALL ALL WORK TO COMPLY WITH ALL LAWS, REGULATIONS, CODES, AND STANDARDS (FEDERAL, STATE, AND LOCAL), AS ADOPTED BY THE AGENCIES HAVING JURISDICTION, INCLUDING REASONABLY ANTICIPATED REVISIONS BASED ON EMERGING TRENDS IN BUILDING REGULATIONS. WHERE ANY OF THESE DIFFER, THE MOST STRINGENT SHALL APPLY.
3. CONTRACT DOCUMENTS FOR MECHANICAL WORK ARE SCHEMATIC IN NATURE AND ARE INTENDED TO CONVEY SCOPE AND GENERAL ARRANGEMENT ONLY.
4. PROVIDE ALL MATERIALS AND EQUIPMENT AND PERFORM ALL LABOR REQUIRED TO INSTALL COMPLETE AND OPERABLE SYSTEMS AS INDICATED ON THE DRAWINGS AND SPECIFICATIONS. INCLUDE ALL NECESSARY AND APPLICABLE APPURTENANCES, WHETHER INDICATED OR NOT.
5. ANY DEVIATIONS FROM THE BASIS OF DESIGN THAT REQUIRE ADDITIONAL PROVISIONS SHALL BE THE RESPONSIBILITY OF THE CONTRACTOR.
6. COORDINATE THE EXACT REQUIREMENTS AND LOCATION OF WORK WITH THE WORK OF OTHER TRADES PRIOR TO FABRICATION AND INSTALLATION. PROVIDE ADDITIONAL OFFSETS AND SECTIONS IN DUCTWORK AND/OR PIPING REQUIRED TO MEET THE APPLICABLE JOB CONDITION REQUIREMENTS. VERIFY JOB SITE ELEVATIONS, DIMENSIONS, AND CONDITIONS, PRIOR TO FABRICATION OR INSTALLATION OF THE WORK. COORDINATE EXACT ROUTING OF DUCTWORK AND PIPING WITH OTHER TRADES SO THAT NO CONFLICTS OCCUR WITH DUCTWORK, PIPING, LIGHTS, STRUCTURE, ETC. PROVIDE ALL PERTINENT DATA CONCERNING THE LOCATION, DIMENSIONS, ETC., OF THE MECHANICAL EQUIPMENT THAT REQUIRES BASES, CURBS AND SUPPORTS TO THE APPROPRIATE TRADES.
7. WHERE CEILINGS ARE INDICATED, ALL DUCTS AND PIPES SHALL BE RAN ABOVE CEILING. IN EXPOSED CONDITIONS, INSTALL DUCTWORK AND PIPING TIGHT TO THE BOTTOM OF STRUCTURE.
8. ALL RATED WALL AND FLOOR PENETRATIONS ARE TO BE SEALED WATER TIGHT AND PACKED WITH FIRE STOP MATERIAL.
9. ALL ITEMS THAT REQUIRE MAINTENANCE OR ADJUSTMENT MUST BE INSTALLED IN ACCESSIBLE LOCATIONS. PROVIDE AN APPROPRIATELY SIZED ACCESS DOOR AS REQUIRED.
10. ALL SEALS, BEARINGS, PACKINGS, AND ACCESSORIES FOR ALL EQUIPMENT AND PIPING SPECIALTIES SHALL BE SUITABLE FOR THE CONTINUOUS OPERATIONAL TEMPERATURES, PRESSURES AND CHARACTERISTICS, OF THE SYSTEM THEY SERVE.
11. PERFORM A COMPLETE AIR SYSTEM FLOW BALANCE FOR ALL EQUIPMENT THAT IS SHOWN, SCHEDULED OR OTHERWISE IDENTIFIED, AT THE END OF CONSTRUCTION.
12. INSTALL EQUIPMENT, MATERIALS, ETC. IN STRICT ACCORDANCE WITH THE MANUFACTURER'S RECOMMENDATIONS AND DIRECTION. PROVIDE STRAIGHT INLET AND OUTLET DUCTS/PIPES BASED ON MANUFACTURER'S RECOMMENDATIONS. IF IN CONFLICT WITH THE DESIGN INDICATED HEREIN, ADVISE THE ENGINEERS PRIOR TO INSTALLATION FOR CLARIFICATION.
13. COORDINATE THE EXACT LOCATIONS OF DIFFUSERS, GRILLES AND REGISTERS WITH ARCHITECTURAL REFLECTED CEILING PLANS, AREA SMOKE DETECTORS, SPRINKLERS, LIGHTS AND ELECTRICAL DEVICES. AIR DEVICES SHALL NOT BE WITHIN 3 FEET OF AN AREA SMOKE DETECTOR.
14. UNLESS NOTED OTHERWISE, PROVIDE BRANCH DUCT TO DIFFUSERS SAME SIZE AS DIFFUSER NECK. FLEXIBLE DUCT CONNECTION TO THE DIFFUSER SHALL BE NO MORE THAN FIVE FEET IN LENGTH. ALL BRANCH DUCT TAKEOFFS TO AIR DEVICES SHALL HAVE A MANUAL BALANCING DAMPER INSTALLED IN AN ACCESSIBLE LOCATION. PROVIDE MEANS FOR BALANCING WHERE MANUAL BALANCING DAMPER CANNOT BE ACCESSED.
15. AIR DEVICES PROVIDED WITH INTEGRAL BALANCE DAMPERS SHALL NOT HAVE AN ADDITIONAL BALANCING DAMPER AT AIR DEVICE BRANCH TAKEOFF.
16. PROVIDE ROOM TEMPERATURE THERMOSTATS / TEMPERATURE SENSORS FOR ALL EQUIPMENT THAT MAINTAINS SPACE TEMPERATURE. PREFERRED LOCATIONS ARE SHOWN ON THE PLANS. THERMOSTATS / TEMPERATURE SENSORS SHALL BE MOUNTED AT 48" ABOVE FINISHED FLOOR, UNLESS NOTED OTHERWISE. COORDINATE THE EXACT LOCATIONS OF THERMOSTATS / TEMPERATURE SENSORS WITH MARKERBOARDS, SWITCHES, AND ANY OTHER WALL MOUNTED FIXTURES PRIOR TO ROUGH IN.
17. AT TIME OF ROUGH INSTALLATION, DURING STORAGE ON THE CONSTRUCTION SITE, AND UNTIL FINAL STARTUP OF THE HEATING AND COOLING EQUIPMENT, ALL DUCT AND OTHER RELATED AIR DISTRIBUTION COMPONENT OPENINGS SHALL BE COVERED WITH TAPE, PLASTIC, SHEET METAL OR OTHER METHODS ACCEPTABLE FOR PROTECTION TO THE ENFORCING AGENCY TO REDUCE THE AMOUNT OF DUST OR DEBRIS WHICH MAY COLLECT IN THE SYSTEM(S).
18. IN MECHANICALLY VENTILATED BUILDINGS, PROVIDE REGULARLY OCCUPIED AREAS OF THE BUILDING WITH AIR FILTRATION MEDIA FOR OUTSIDE AND RETURN AIR THAT PROVIDES AT LEAST A MINIMUM EFFICIENCY REPORTING VALUE (MERV) OF 8 PRIOR TO OCCUPANCY. FILTERS SHALL BE CHANGED PRIOR TO AIR BALANCE AND COMMISSIONING, AND AGAIN AT THE COMPLETION OF CONSTRUCTION JUST PRIOR TO OCCUPANCY OF THE BUILDING WITH FINAL FILTERS PER SPECIFICATIONS. MAINTENANCE RECOMMENDATIONS FOR FILTERS OF THE SAME VALUE SHALL BE INCLUDED IN THE OPERATION AND MAINTENANCE MANUAL.
19. INSTALLATION OF HVAC, REFRIGERATION, AND FIRE SUPPRESSION EQUIPMENT SHALL NOT CONTAIN ANY CFCS OR HALONS.
20. ALL SUPPORTS FOR EQUIPMENT, DUCTWORK AND PIPING SYSTEMS, DEVICES SHALL BE FROM THE BUILDING STRUCTURE. SUPPORT FROM STRUCTURAL BRIDGING IS UNACCEPTABLE.
21. DO NOT INSTALL PIPING, CONDUIT, DUCTWORK, ETC., IN A LOCATION OR IN A MANNER THAT WILL ALLOW FREEZING AND/OR THE COLLECTION OF CONDENSATION.
22. DO NOT INSTALL REFRIGERANT PIPING, CONDENSATE PIPING, DUCTWORK, ETC., IN OR ABOVE A TELECOMMUNICATIONS ROOM OR ELECTRICAL ROOM THAT DOES NOT SERVE THAT AREA.

AECOM

PROJECT

NEW SECURITY FORCES BUILDING

PAYNE BLVD.
CHARLOTTE, NORTH CAROLINA 28208

CLIENT

NORTH CAROLINA AIR NATIONAL GUARD - 145TH AIRLIFT WING

ARCHITECT/DESIGNER

AECOM

277 W NATIONWIDE BLVD
COLUMBUS, OH 43215
614-464-4500

www.aecom.com

CONSULTANTS

REGISTRATION

STATE OF OHIO
RENAE FOCHESATO
E-90911
REGISTERED
PROFESSIONAL ENGINEER

05-30-2025

KEY PLAN

ISSUE/REVISION

I/R	DATE	DESCRIPTION
	05-30-2025	B-3 SUBMITTAL - FINAL
	03-14-2025	B-2 SUBMITTAL
	09-29-2023	B-1 SUBMITTAL

PROJECT NUMBER

60637899

SHEET TITLE

GENERAL INFORMATION - HVAC

SHEET NUMBER

M001

©2023 AECOM Corporation

Printed on ___% Post-Consumer Recycled Content Paper

14-MECHANICAL-14.01-M002-HVAC ZONING PLANS
Project Management Initials: MR Designer: DES Checked: CHK Approved: APR ARCH E1 30"x42"

KEYNOTES

1 HEATING ONLY.
2 PROVIDE TWO THERMOSTATS AS SHOWN AND USE AVERAGE TEMPERATURE TO CONTROL TERMINAL BOX TB14.

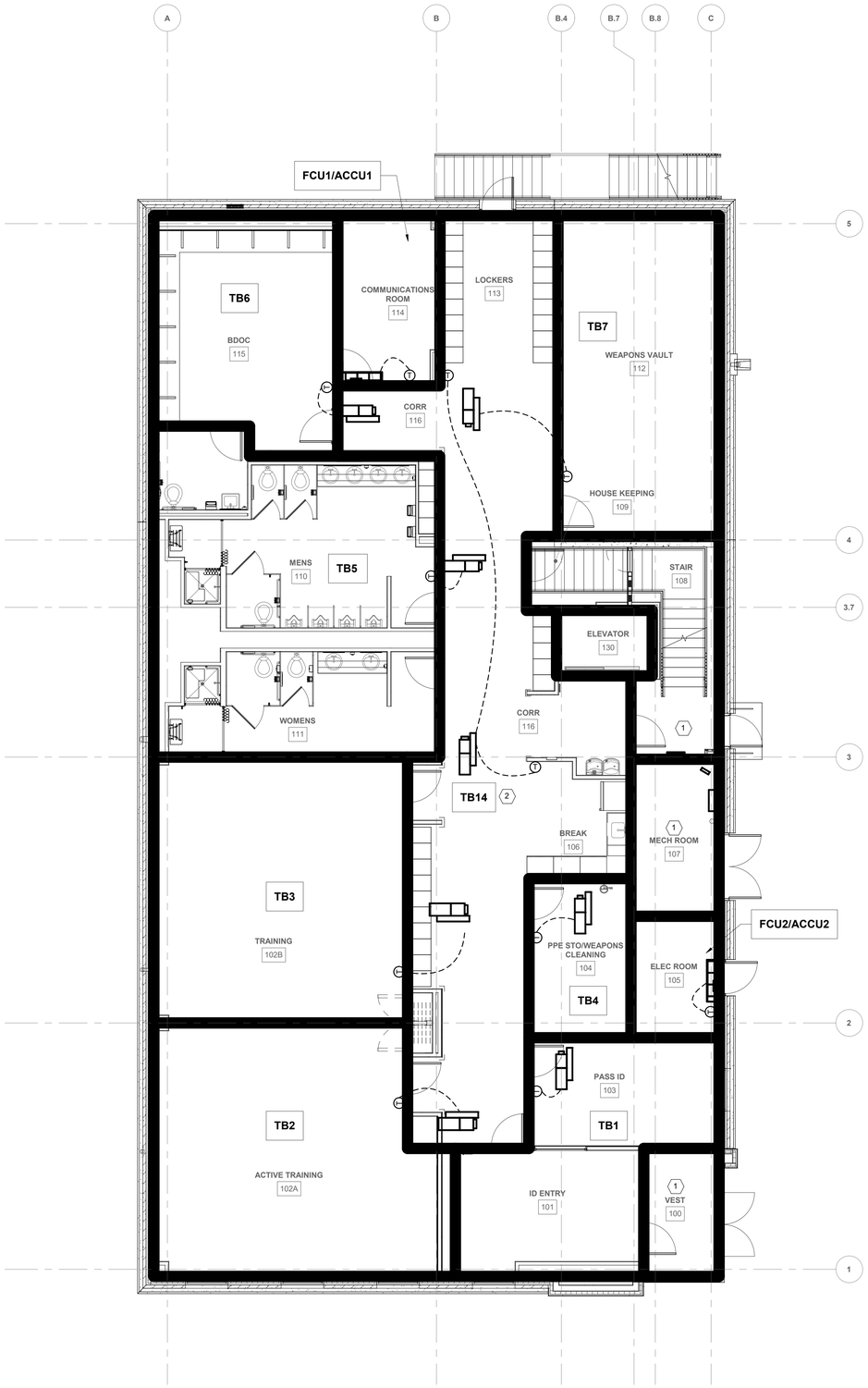

1 M002 **FIRST FLOOR ZONING PLAN**
Scale: 3/16" = 1'-0"

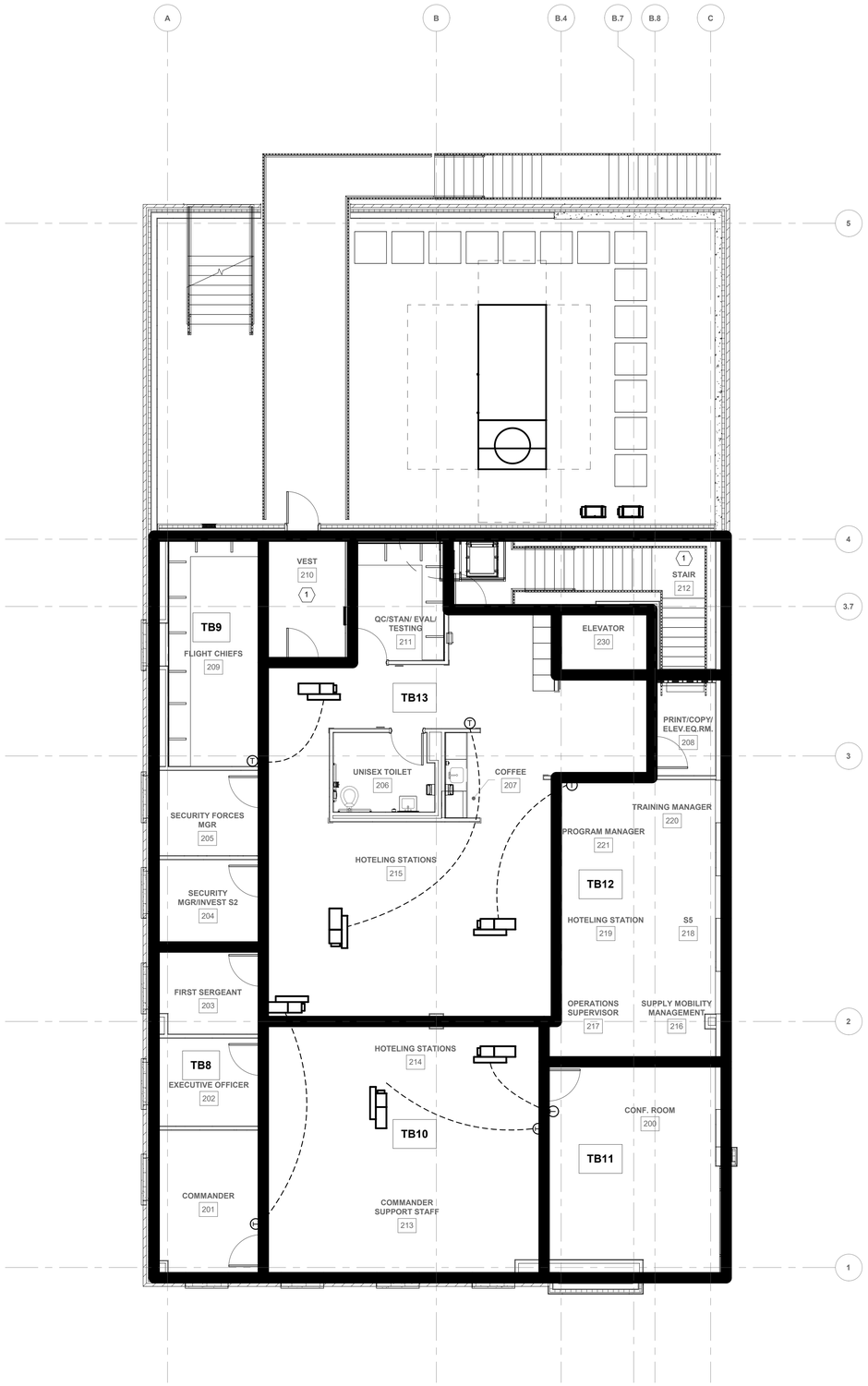

2 M002 **SECOND FLOOR ZONING PLAN**
Scale: 3/16" = 1'-0"

N

AECOM

PROJECT
NEW SECURITY FORCES BUILDING
PAYNE BLVD.
CHARLOTTE, NORTH CAROLINA 28208

CLIENT
NORTH CAROLINA AIR NATIONAL GUARD - 145TH AIRLIFT WING

ARCHITECT/DESIGNER
AECOM
277 W NATIONWIDE BLVD
COLUMBUS, OH 43215
614-464-4500

www.aecom.com

CONSULTANTS

REGISTRATION
STATE OF OHIO
RENAE FOCHESATO
E-90911
REGISTERED
PROFESSIONAL ENGINEER
05-30-2025

KEY PLAN

ISSUE/REVISION

I/R	DATE	DESCRIPTION
	05-30-2025	B-3 SUBMITTAL - FINAL
	03-14-2025	B-2 SUBMITTAL
	09-29-2023	B-1 SUBMITTAL

PROJECT NUMBER
60637899

SHEET TITLE
HVAC ZONING PLANS

SHEET NUMBER
M002

Last Plotted: 5/22/2025 5:59:18 PM
Filename: BIM 360/BIS-SMEF(USA)/60637899-SFNCANG145/60637899_SF NC ANG_R21_M.rvt

Printed on ____% Post-Consumer Recycled Content Paper

©2023 AECOM Corporation

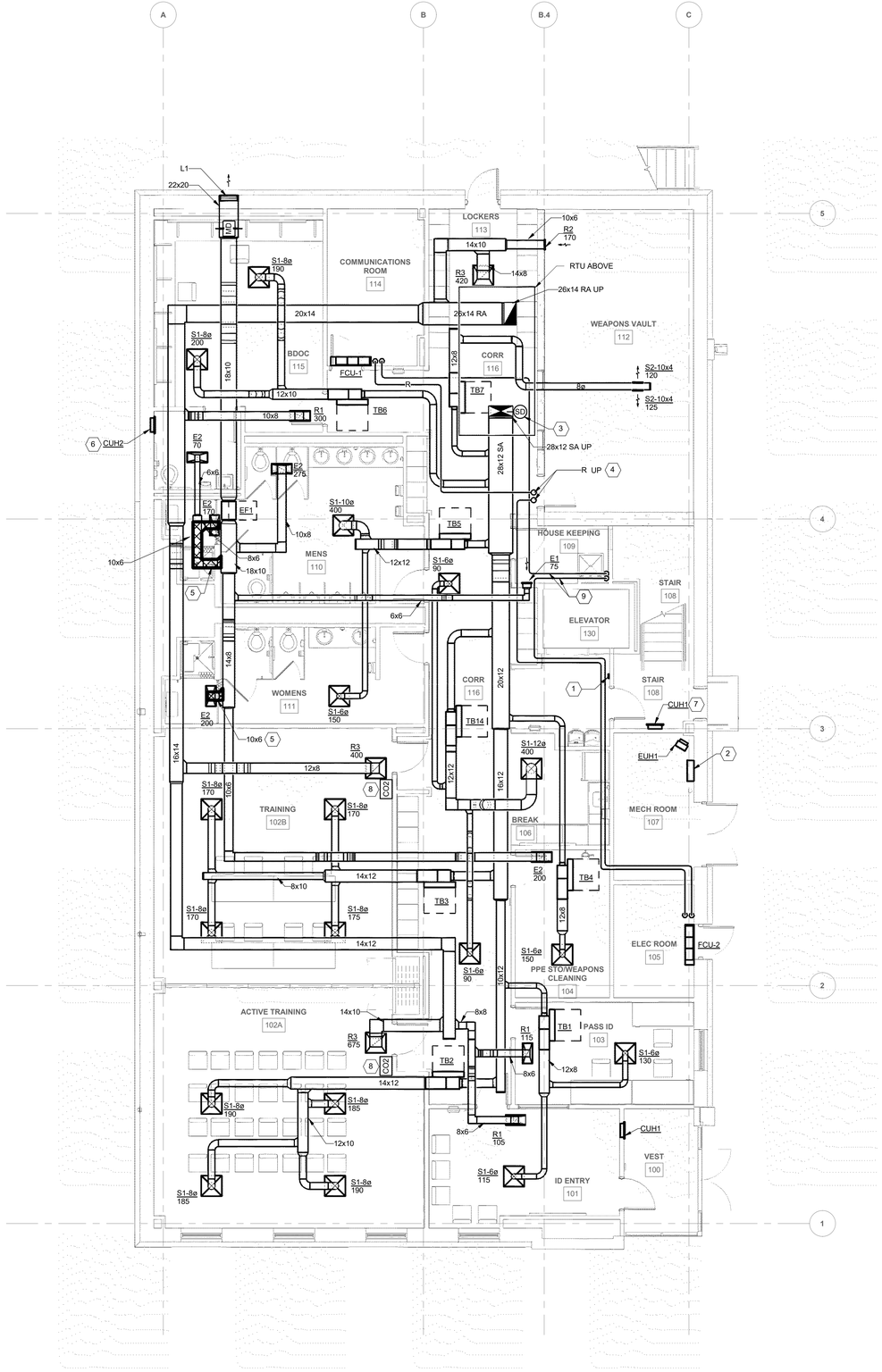

1 M101 **FIRST FLOOR HVAC DUCTWORK PLAN**
Scale: 3/16" = 1'-0"

KEYNOTES

1. EMERGENCY SHUTOFF SWITCH, WALL MOUNTED. UPON ACTIVATION, SWITCH WILL INITIATE A SIGNAL TO CLOSE ALL DAMPERS AT OUTSIDE AIR INTAKES, RELIEF AIR, AND EXHAUST OPENINGS, FOLLOWING THE EMERGENCY SHUTOFF CONTROL SEQUENCE.
2. DDC CONTROL PANEL.
3. PROVIDE DUCT MOUNTED SMOKE DETECTOR ON SUPPLY SIDE WITH AUXILIARY CONTACT FOR FIRE ALARM MONITORING.
4. REFRIGERANT PIPING SHOWN SCHEMATICALLY AS SINGLE LINE FOR READABILITY. HVAC CONTRACTOR IS RESPONSIBLE FOR COORDINATING ALL REFRIGERANT PIPING LINE SETS, SIZING AND ALL ACCESSORIES WITH EQUIPMENT MANUFACTURER. PIPE SIZING SHALL BE BASED ON ACTUAL FIELD DEVELOPED PIPE LENGTHS. ALL REFRIGERANT PIPING SHALL BE FULLY INSULATED. ALL REFRIGERANT PIPING OUTDOORS SHALL BE JACKETED WITH ALUMINUM. A REFRIGERANT PIPING INSTALLATION DIAGRAM SHALL BE INCLUDED AS PART OF THE SHOP DRAWING PROCESS AND DOCUMENT SET INDICATING ALL REQUIRED LINE SIZES, TRAPS, ACCESSORIES, PITCHING, RISERS AND INSTALLATION REQUIREMENTS IN ACCORDANCE WITH THE MANUFACTURERS RECOMMENDATIONS.
5. PROVIDE ALUMINUM EXHAUST DUCTWORK FROM AIR DEVICES BACK TO DUCTWORK MAIN AS INDICATED ON PLANS WITH HATCHING PATTERN.
6. CABINET UNIT HEATER TO BE RECESSED MOUNTED.
7. CABINET UNIT HEATER TO BE SURFACE MOUNTED. PROVIDE WITH SURFACE MOUNTING KIT.
8. MOUNT CO2 MONITORS 48" ABOVE FINISHED FLOOR. PROVIDE VISUAL ALARM IF CO2 CONCENTRATION RISE ABOVE 15%.
9. SLOPE CONDENSATE PIPING PER SPECIFICATIONS TO ALLOW CONDENSATE TO DRAIN AS MUCH AS POSSIBLE BY GRAVITY. TERMINATE CONDESATE PIPING ABOVE MOP SINK WITH MINIMUM 2" AIR GAP. SECURE PIPING TO WALL AS REQUIRED TO AVOID BREAKAGE OR TRIPPING HAZARD.

N

AECOM

PROJECT

NEW SECURITY FORCES BUILDING

PAYNE BLVD.
CHARLOTTE, NORTH CAROLINA 28208

CLIENT

NORTH CAROLINA AIR NATIONAL GUARD - 145TH AIRLIFT WING

ARCHITECT/DESIGNER

AECOM

277 W NATIONWIDE BLVD
COLUMBUS, OH 43215
614-464-4500

www.aecom.com

CONSULTANTS

REGISTRATION

STATE OF OHIO
RENAE FOCHESATO
E-90911
REGISTERED
PROFESSIONAL ENGINEER
05-30-2025

KEY PLAN

ISSUE/REVISION

I/R	DATE	DESCRIPTION
	05-30-2025	B-3 SUBMITTAL - FINAL
	03-14-2025	B-2 SUBMITTAL
	09-29-2023	B-1 SUBMITTAL

PROJECT NUMBER

60637899

SHEET TITLE

FIRST FLOOR HVAC DUCTWORK PLAN

SHEET NUMBER

M101

©2023 AECOM Corporation

Last Plotted: 5/22/2025 5:59:22 PM
Filename: BM 360-IDP-AMER (USA)\60637899-SFNCANG\145th\60637899_SF-NC ANG_R21_M-H

Printed on ___% Post-Consumer Recycled Content Paper

14-MECHANICAL-14.20-M102-SECOND FLOOR HVAC DUCTWORK PLAN
Project Management Initials: MR Designer: DES Checked: CHK Approved: APR ARCH E1 30"x42"

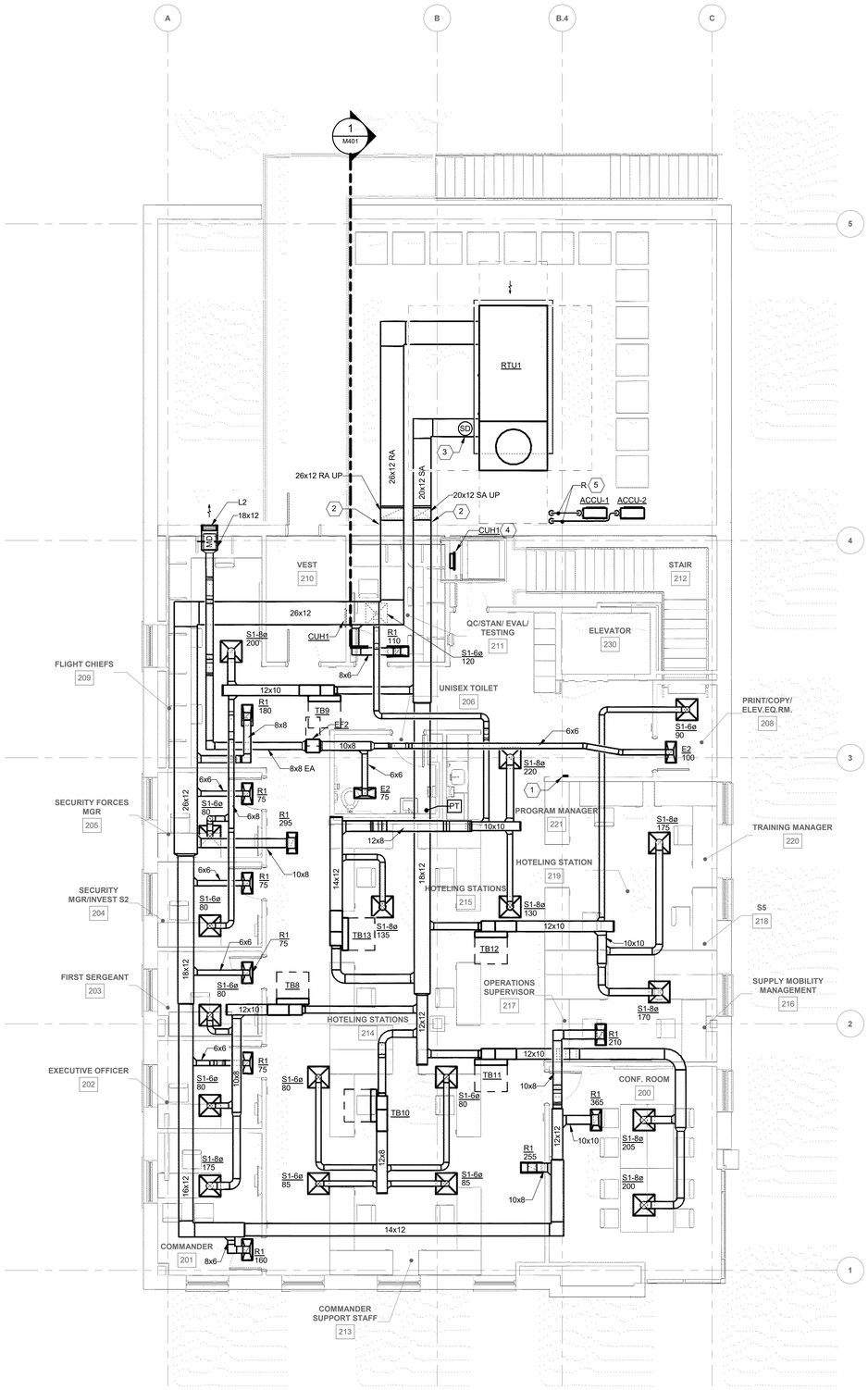

1 M102 **SECOND FLOOR HVAC DUCTWORK PLAN**
Scale: 3/16" = 1'-0"

KEYNOTES

1. EMERGENCY SHUTOFF SWITCH, WALL MOUNTED. UPON ACTIVATION, SWITCH WILL INITIATE A SIGNAL TO CLOSE ALL DAMPERS AT OUTSIDE AIR INTAKES, RELIEF AIR, AND EXHAUST OPENINGS, FOLLOWING THE EMERGENCY SHUTOFF CONTROL SEQUENCE.
2. SLEEVE AND SEAL WALL PENETRATION.
3. PROVIDE DUCT MOUNTED SMOKE DETECTOR ON SUPPLY SIDE WITH AUXILIARY CONTACT FOR FIRE ALARM MONITORING.
4. CABINET UNIT HEATER TO BE SURFACE MOUNTED. PROVIDE WITH SURFACE MOUNTING KIT.
5. REFRIGERANT PIPING SHOWN SCHEMATICALLY AS SINGLE LINE FOR READABILITY. HVAC CONTRACTOR IS RESPONSIBLE FOR COORDINATING ALL REFRIGERANT PIPING LINE SETS, SIZING AND ALL ACCESSORIES WITH EQUIPMENT MANUFACTURER. PIPE SIZING SHALL BE BASED ON ACTUAL FIELD DEVELOPED PIPE LENGTHS. ALL REFRIGERANT PIPING SHALL BE FULLY INSULATED. ALL REFRIGERANT PIPING OUTDOORS SHALL BE JACKETED WITH ALUMINUM. A REFRIGERANT PIPING INSTALLATION DIAGRAM SHALL BE INCLUDED AS PART OF THE SHOP DRAWING PROCESS AND DOCUMENT SET INDICATING ALL REQUIRED LINE SIZES, TRAPS, ACCESSORIES, PITCHING, RISERS AND INSTALLATION REQUIREMENTS IN ACCORDANCE WITH THE MANUFACTURERS RECOMMENDATIONS.

AECOM

PROJECT

NEW SECURITY FORCES BUILDING

PAYNE BLVD.
CHARLOTTE, NORTH CAROLINA 28208

CLIENT

NORTH CAROLINA AIR NATIONAL GUARD - 145TH AIRLIFT WING

ARCHITECT/DESIGNER

AECOM

277 W NATIONWIDE BLVD
COLUMBUS, OH 43215
614-464-4500

www.aecom.com

CONSULTANTS

REGISTRATION

STATE OF OHIO
RENAE FOCHESATO
E-90911
REGISTERED
PROFESSIONAL ENGINEER

05-30-2025

KEY PLAN

ISSUE/REVISION

I/R	DATE	DESCRIPTION
	05-30-2025	B-3 SUBMITTAL - FINAL
	03-14-2025	B-2 SUBMITTAL
	09-29-2023	B-1 SUBMITTAL

PROJECT NUMBER

60637899

SHEET TITLE

SECOND FLOOR HVAC DUCTWORK PLAN

SHEET NUMBER

M102

N

©2023 AECOM Corporation

Last Plotted: 5/22/2025 5:58:23 PM
Filename: BIM 360/BIS-AMER (USA)-60637899-SFNCANG145th60637899_SF-NC ANG_R21_M.rvt

Printed on ____% Post-Consumer Recycled Content Paper

14-MECHANICAL-14.40-M401-HVAC SECTIONS
Project Management Initials: MR Designer: DES Checked: CHK Approved: APR ARCH E1 30"x42"

KEYNOTES

1 PROVIDE DUCT MOUNTED SMOKE DETECTOR ON SUPPLY SIDE WITH AUXILIARY CONTACT FOR FIRE ALARM MONITORING.

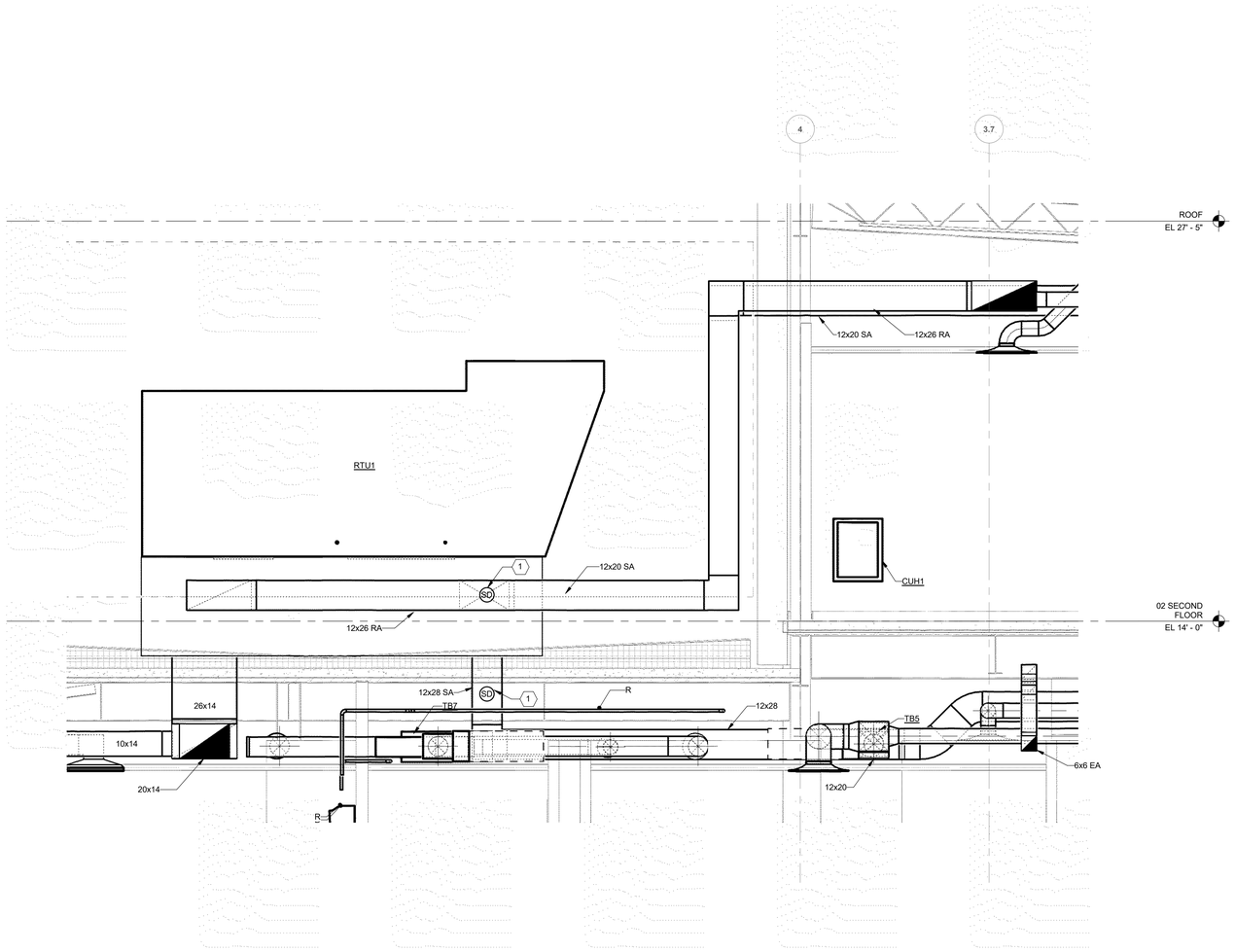

1 M401 **ROOF HVAC SECTION VIEW**
Scale: 1/2" = 1'-0"

AECOM

PROJECT
NEW SECURITY FORCES BUILDING
PAYNE BLVD.
CHARLOTTE, NORTH CAROLINA 28208

CLIENT
NORTH CAROLINA AIR NATIONAL GUARD - 145TH AIRLIFT WING

ARCHITECT/DESIGNER
AECOM
277 W NATIONWIDE BLVD
COLUMBUS, OH 43215
614-464-4500

www.aecom.com

CONSULTANTS

REGISTRATION
STATE OF OHIO
RENAE FOCHESATO
E-90911
REGISTERED
PROFESSIONAL ENGINEER
05-30-2025

KEY PLAN

ISSUE/REVISION

I/R	DATE	DESCRIPTION
	05-30-2025	B-3 SUBMITTAL - FINAL
	03-14-2025	B-2 SUBMITTAL
	09-29-2023	B-1 SUBMITTAL

PROJECT NUMBER
60637899

SHEET TITLE
HVAC SECTIONS

SHEET NUMBER
M401

Last Plotted: 5/22/2025 5:59:27 PM
Filename: BIM 360://BA-AMER (USA)/60637899-SFNCANG/145606637899_SF-NC ANG_R21_M.rvt

Printed on ___% Post-Consumer Recycled Content Paper

©2023 AECOM Corporation

14-MECHANICAL-14.60-M601-HVAC DETAILS
Project Management Initials: MR Designer: DES Checked: CHK Approved: APR ARCH E1 30"x42"

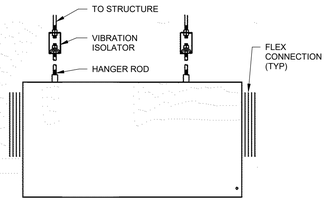

1 HORIZONTAL INLINE EXHAUST FAN DETAIL
M601 NTS

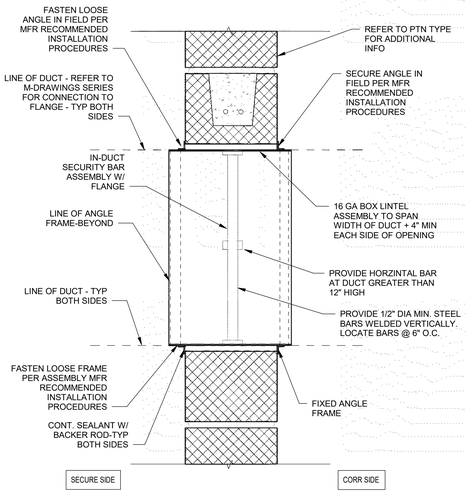

2 SECURITY BAR SLEEVE/DUCT DETAIL
M601 NTS

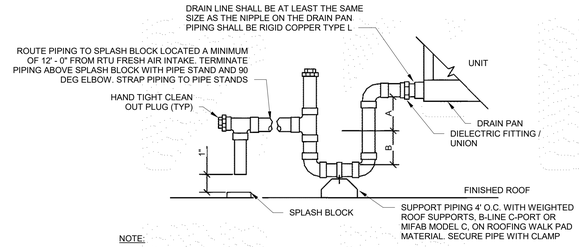

NOTE:

1. DIELECTRIC FITTING TO BE USED WHEN TWO DISSIMILAR METALS ARE TO BE CONNECTED.
2. SLOPE PIPING DOWN TOWARDS PLUMBING DRAIN AT 1/8" PER FOOT.
3. RUNNING TRAPS ARE NOT ALLOWED.
4. TRAP AND PIPING SAME SIZE AS UNIT CONNECTION UNLESS OTHERWISE DICTATED BY LOCAL CODES.
5. COORDINATE CONDENSATE PIPING ROUTING TO FOLLOW ROOF SLOPE - SLOPE AT 1/8" PER FOOT MIN.

UNIT TYPE	A	B
DRAW THRU	2" PLUS X	X
BLOW THRU	1" MINIMUM	2X

WHERE X = STATIC PRESSURE IN PAN

3 ROOFTOP UNIT DRAIN TRAP DETAIL
M601 NTS

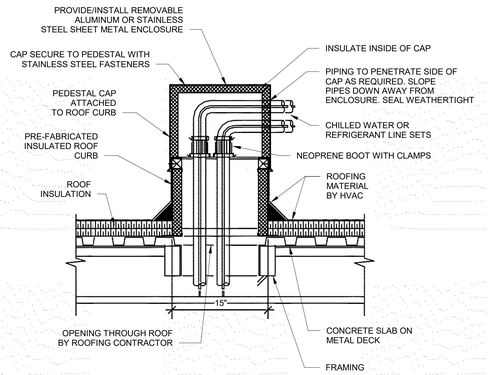

4 PIPE ROOF PENETRATION DETAIL
M601 NTS

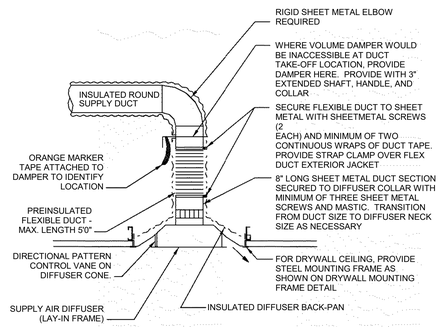

5 FLEXIBLE DUCT AT DIFFUSER DETAIL
M601 NTS

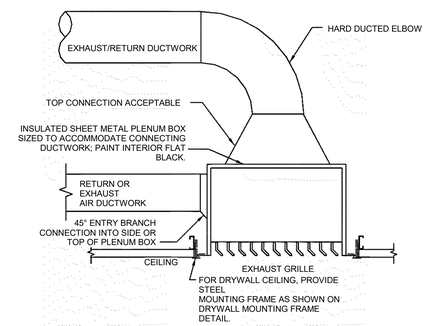

6 HARD DUCTED EXHAUST OR RETURN GRILLE DETAIL
M601 NTS

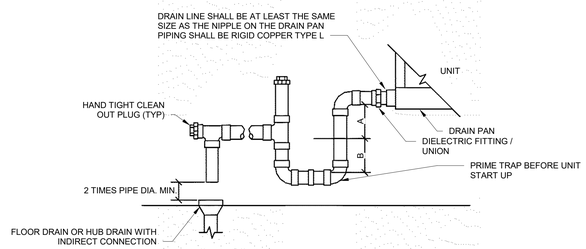

NOTE:

1. DIELECTRIC FITTING TO BE USED WHEN TWO DISSIMILAR METALS ARE TO BE CONNECTED.
2. SLOPE PIPING DOWN TOWARDS PLUMBING DRAIN AT 1/8" PER FOOT.
3. RUNNING TRAPS ARE NOT ALLOWED.
4. TRAP AND PIPING SAME SIZE AS UNIT CONNECTION UNLESS OTHERWISE DICTATED BY LOCAL CODES.
5. COORDINATE CONDENSATE PIPING ROUTING TO FOLLOW ROOF SLOPE - SLOPE AT 1/8" PER FOOT MIN.

UNIT TYPE	A	B
DRAW THRU	2" PLUS X	X
BLOW THRU	1" MINIMUM	2X

WHERE X = STATIC PRESSURE IN PAN

7 INDOOR UNIT DRAIN TRAP DETAIL
M601 NTS

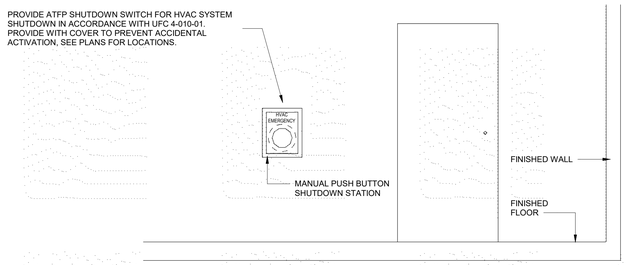

NOTES:
1. INTERLOCK WITH DDC SYSTEM, SEE SEQUENCE OF CONTROLS.
2. INTERLOCK WITH FIRE ALARM SYSTEM.
3. PROVIDE LABEL ON SWITCH AS FOLLOWS: "HVAC EMERGENCY SHUTDOWN".
4. SWITCH COLOR SHALL BE OF A DIFFERENT COLOR THAN THE FIRE ALARM SWITCHES.

8 HVAC SHUTDOWN STATION INSTALLATION DETAIL
M601 Scale: NTS

AECOM

PROJECT
NEW SECURITY FORCES BUILDING
PAYNE BLVD.
CHARLOTTE, NORTH CAROLINA 28208

CLIENT
NORTH CAROLINA AIR NATIONAL GUARD - 145TH AIRLIFT WING

ARCHITECT/DESIGNER
AECOM
277 W NATIONWIDE BLVD
COLUMBUS, OH 43215
614-464-4500

www.aecom.com

CONSULTANTS

REGISTRATION

STATE OF OHIO
RENAE FOCHESATO
E-90911
REGISTERED
PROFESSIONAL ENGINEER
05-30-2025

KEY PLAN

ISSUE/REVISION

I/R	DATE	DESCRIPTION
	05-30-2025	B-3 SUBMITTAL - FINAL
	03-14-2025	B-2 SUBMITTAL
	09-29-2023	B-1 SUBMITTAL

PROJECT NUMBER
60637899

SHEET TITLE
HVAC DETAILS

SHEET NUMBER
M601

Last Plotted: 5/22/2025 5:05:29 PM
Filename: BM:360:BP-AMER1(USA)60637899-SFNGCANG01450603789_SF-NC ANG_R21_M.rvt
Printed on:____% Post-Consumer Recycled Content Paper
©2023 AECOM Corporation

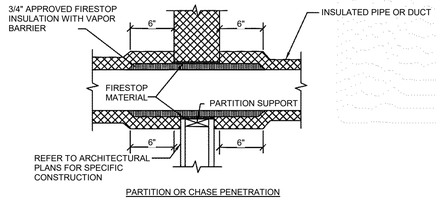

PARTITION OR CHASE PENETRATION

NOTE:

1. APPLICABLE TO PENETRATIONS OF ALL FIRE RATED MEMBRANES, IN ACCORDANCE WITH NFPA 101. REFER TO SPECIFICATIONS FOR FIRE STOPPING SYSTEMS.

1 PIPE/DUCT WALL PENETRATION DETAIL
M602 NTS

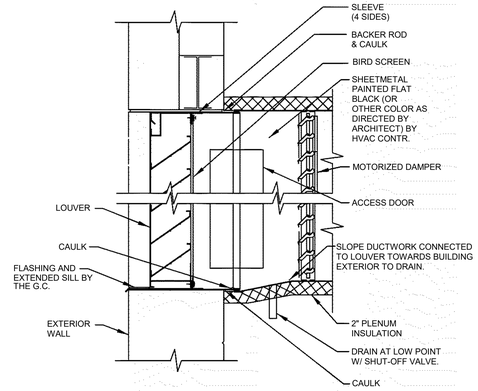

2 WALL LOUVER DETAIL
M602 NTS

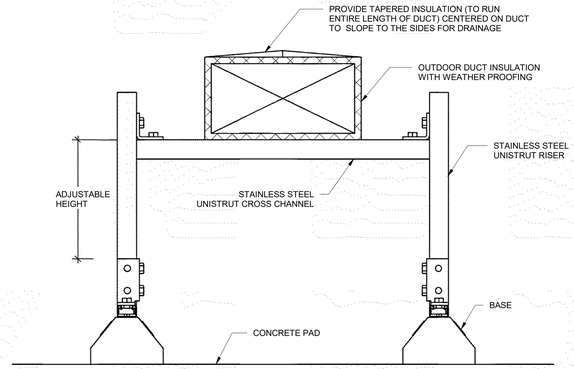

NOTE: BASIS OF DESIGN FOR OUTDOOR DUCT SUPPORTS: ANVIL H-BLOCK HBS-DSFW. SUPPORT MAY SPAN WIDTH OF DUCTWORK FOR USE OF ONE SUPPORT. INSTALL PER MANUFACTURER'S RECOMMENDATIONS.

3 EXTERIOR DUCTWORK & DUCT SUPPORT DETAIL
M602 NTS

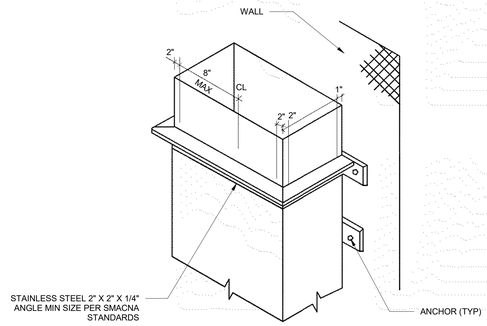

4 VERTICAL DUCT SUPPORT FROM WALL DETAIL
M602 NTS

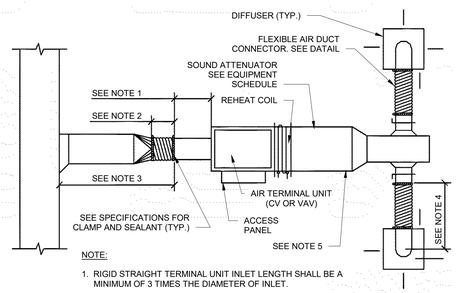

NOTE:

1. RIGID STRAIGHT TERMINAL UNIT INLET LENGTH SHALL BE A MINIMUM OF 3 TIMES THE DIAMETER OF INLET.
2. A FLXIBLE AIR DUCT CONNECTOR IS NOT MANDATORY FOR INLET TO THIS BOX, BUT ALLOWED TO ACCOMMODATE MINOR OFFSETS. MAXIMUM LENGTH 3'-0".
3. A BRANCH DUCT SERVING AN INDIVIDUAL BOX MAY BE THE SAME SIZE AS THE BOX INLET, PROVIDED THE EQUIVALENT LENGTH OF THE BRANCH DUCT, AS SHOWN, DOES NOT EXCEED 10 FEET. FOR LONGER LENGTHS, INCREASE THE DUCT SIZE AND PROVIDE A DUCT TRANSITION TO MAINTAIN THE DUCT STATIC PRESSURE DROP AT OR BELOW 0.2"/100'.
4. FLEXIBLE AIR DUCT CONNECTORS, WHEN USED FROM TERMINAL UNIT SUPPLY AIR DUCT TO DIFFUSER, SHALL NOT EXCEED 5'-0". USE RIGID ELBOWS FOR CHANGE OF DIRECTION GREATER THAN 45°.
5. DO NOT INSTALL DEVICES WITHING SOUND ATTENUATOR.
6. USE OF THE FLEXIBLE AIR DUCT CONNECTORS ARE NOT PERMITTED FOR THE DEDICATED AHU SERVING THE SURGICAL SUITE.

5 DUCT CONNECTIONS - AIR TERMINAL UNIT DETAIL
M602 NTS

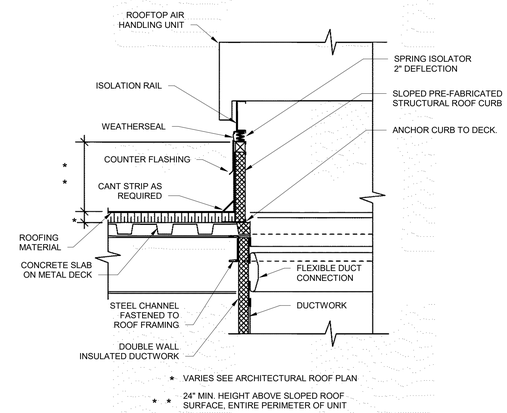

* VARIES SEE ARCHITECTURAL ROOF PLAN

* * 24" MIN. HEIGHT ABOVE SLOPED ROOF SURFACE, ENTIRE PERIMETER OF UNIT

6 ROOF CURB DETAIL
M602 NTS

AECOM

PROJECT
NEW SECURITY FORCES BUILDING
PAYNE BLVD.
CHARLOTTE, NORTH CAROLINA 28208

CLIENT
NORTH CAROLINA AIR NATIONAL GUARD - 145TH AIRLIFT WING

ARCHITECT/DESIGNER
AECOM
277 W NATIONWIDE BLVD
COLUMBUS, OH 43215
614-464-4500

www.aecom.com

CONSULTANTS

REGISTRATION

STATE OF OHIO
RENAE FOCHESATO
E-90911
REGISTERED
PROFESSIONAL ENGINEER
05-30-2025

KEY PLAN

ISSUE/REVISION

I/R	DATE	DESCRIPTION
	05-30-2025	B-3 SUBMITTAL - FINAL
	03-14-2025	B-2 SUBMITTAL
	09-29-2023	B-1 SUBMITTAL

PROJECT NUMBER
60637899

SHEET TITLE
HVAC DETAILS

SHEET NUMBER
M602

Last Plotted: 6/22/2025 5:59:31 PM
File name: Bldl 560-BP-MBR (USA) 60637899-SFNCANG145ft60637899_SF-NC ANG_R21_M.rvt
Printed on ___ % Post-Consumer Recycled Content Paper
©2023 AECOM Corporation

14-MECHANICAL-14.70-M701-HVAC SCHEDULES ARCH E1 30"x42"
Checked: CHK Approved: APR
Designer: DES
Project Management Initials: MR

PROJECT SCHEDULE NOTES

1	PROVIDE 36" INSULATED PLENUM CURB. SEE SHEET M102 FOR OPENING LOCATIONS.
2	PROVIDE 2" DEFLECTION SPRING VIBRATION ISOLATION RAIL.
3	PROVIDE WITH INTEGRAL THERMOSTAT.
4	PROVIDE WITH CONDENSATE PUMP.
5	PROVIDE WITH BACNET IP CARD.
6	SET OUTDOOR UNIT ON 12" EQUIPMENT RAIL.
7	SINGLE POINT POWER CONNECTION WITH NON-FUSED DISCONNECT SWITCH.
8	PROVIDE WITH FIELD POWERED 115V GFCI OUTLET.
9	MODULATING HOT GAS REHEAT COIL.
10	PROVIDE WITH DISCONNECT SWITCH.
11	PROVIDE WITH INTEGRAL VOLUME DAMPER.
12	LOW AMBIENT COOLING CAPABILITY DOWN TO 0°F.
13	PROVIDE DUCT MOUNTED SMOKE DETECTOR IN SUPPLY DUCT ON EACH FLOOR.
14	PROVIDE WITH OUTDOOR AIRFLOW MONITORING STATION.
15	PROVIDE WITH MODULATING HOG GAS REHEAT AND RETURN AIR HUMIDITY SENSOR.
16	
17	
18	
19	
20	
21	
22	
23	
24	
25	
26	
27	
28	
29	
30	
31	
32	
33	
34	
35	
36	
37	
38	
39	
40	
41	

ROOFTOP UNIT SCHEDULE (DX / ELECTRIC) (PART 1 OF 2)

UNIT DATA			BASIS OF DESIGN		PERFORMANCE DATA			SUPPLY FAN DATA											RETURN / RELIEF FAN DATA								DX COOLING COIL DATA							COMPRESSOR DATA			
TAG	LOCATION	FUNCTION	MANUFACTURER	MODEL	AMBIENT (°F)	EER	IEER	TOTAL AIRFLOW (CFM)	MIN OA (CFM)	ESP (IN WG)	TSP (IN WG)	FAN TYPE	# OF FANS	HP (EACH)	BHP (EACH)	VOLTS	PHASE	VFD	TOTAL AIRFLOW (CFM)	ESP (IN WG)	TSP (IN WG)	FAN TYPE	# OF FANS	HP (EACH)	BHP (EACH)	VFD	TOTAL CAPACITY (MBH)	SENSIBLE CAPACITY (MBH)	EAT DB (°F)	EAT WB (°F)	LAT DB (°F)	LAT WB (°F)	ROWS	REFRIG TYPE	TYPE	# OF COMPR	# OF CIRCUITS
RTU1	LOWER ROOF	COOLING/HEATING	DAIKIN	DPS028	95.0	10.3	17.5	6,060	1,620	2.70	3.88	PLENUM FAN	1	7.50	5.25	480	3	Yes	6,060	1.00	1.24	AIRFOIL	1	8.00	3.21	Yes	322.0	208.9	83.2	68.9	51.7	51.6	4	R410A	INVERTER SCROLL	2	2

ROOFTOP UNIT SCHEDULE (HEAT PUMP / ELECTRIC) (PART 2 OF 2)

	ELECTRIC HEATING DATA					FILTER DATA		ELECTRICAL DATA						
TAG	HEATING AIRFLOW (CFM)	EAT DB (°F)	LAT DB (°F)	CAPACITY (KW)	STAGES	PREFILTER (MERV)	FILTER (MERV)	MCA	MOCP	VOLTS	PHASE	EMERGENCY POWER	WEIGHT (LBS)	SCHEDULE NOTES
RTU1	3,120	45.8	61.9	20	SCR	8	13	69.1	90.0	480	3	Yes	4,500	1,2,5,7,8,9,13,14,15

TERMINAL BOX SCHEDULE (ELECTRIC REHEAT) BY TYPE

UNIT DATA		BASIS OF DESIGN		COOLING PERFORMANCE			HEATING DATA (AT MAXIMUM HEATING CAPACITY)								
UNIT TAG	NECK SIZE (IN)	MANUFACTURER	MODEL	MAXIMUM FLOW (CFM)	MINIMUM FLOW (CFM)	MAX APD (IN WG)	HEATING AIRFLOW (CFM)	HEATING CAPACITY (KW)	EAT DB (°F)	LAT DB (°F)	STAGES	VOLTS	PHASE	EMERGENCY POWER	SCHEDULE NOTES
TB1	6	PRICE	SDV	245	130	0.15	130	1.9	55.0	95.0	SCR	480	3	Yes	10
TB2	10	PRICE	SDV	750	415	0.28	415	5.3	55.0	95.0	SCR	480	3	Yes	10
TB3	10	PRICE	SDV	685	415	0.28	415	5.3	55.0	95.0	SCR	480	3	Yes	10
TB4	6	PRICE	SDV	150	150	0.15	150	0.8	55.0	95.0	SCR	480	3	Yes	10
TB5	8	PRICE	SDV	550	550	0.26	550	2.1	55.0	95.0	SCR	480	3	Yes	10
TB6	8	PRICE	SDV	390	120	0.26	120	1.5	55.0	95.0	SCR	480	3	Yes	10
TB7	6	PRICE	SDV	245	105	0.15	105	1.3	55.0	95.0	SCR	480	3	Yes	10
TB8	8	PRICE	SDV	335	105	0.26	105	1.3	55.0	95.0	SCR	480	3	Yes	10
TB9	8	PRICE	SDV	360	115	0.26	115	1.5	55.0	95.0	SCR	480	3	Yes	10
TB10	8	PRICE	SDV	330	135	0.26	135	1.7	55.0	95.0	SCR	480	3	Yes	10
TB11	8	PRICE	SDV	405	125	0.26	125	1.6	55.0	95.0	SCR	480	3	Yes	10
TB12	8	PRICE	SDV	435	220	0.26	220	2.8	55.0	95.0	SCR	480	3	Yes	10
TB13	10	PRICE	SDV	605	305	0.28	200	3.8	55.0	95.0	SCR	480	3	Yes	10
TB14	8	PRICE	SDV	575	200	0.26	200	2.5	55.0	95.0	SCR	480	3	Yes	10

CABINET UNIT HEATER SCHEDULE (ELECTRIC)

UNIT DATA				BASIS OF DESIGN		PERFORMANCE DATA			ELECTRICAL DATA					
TAG	TYPE	INLET TYPE	OUTLET TYPE	MANUFACTURER	MODEL	AIRFLOW (CFM)	EAT DB (°F)	LAT DB (°F)	CAPACITY (KW)	STAGES	VOLTS	PHASE	EMERGENCY POWER	SCHEDULE NOTES
CUH1	FAN FORCED	FRONT	FRONT	INDEECO	WCI 3000	160	50.0	109.0	3.00	1	480	3	Yes	3,10
CUH2	FAN FORCED	FRONT	FRONT	INDEECO	WCI 1500	160	50.0	80.0	1.50	1	120	1	Yes	3,10

FAN SCHEDULE

UNIT DATA			BASIS OF DESIGN		PERFORMANCE DATA					MOTOR DATA						GENERAL DATA				
TAG	LOCATION	FUNCTION	MANUFACTURER	MODEL	FAN TYPE	FLOW (CFM)	ESP (IN WG)	DRIVE TYPE	SOUND RATING (SONES)	HP	BHP	VOLTS	PHASE	VFD	EMERGENCY POWER	REDUNDANT	GREASE RATED	SMOKE RATED	WEIGHT (LBS)	SCHEDULE NOTES
EF1	FIRST FLOOR	GENERAL EXHAUST	GREENHECK	SQ-120-VG	INLINE	970	0.50	DIRECT DRIVE	7.1	0.30	0.50	115	1	No	Yes	No	No	No	55	10
EF2	SECOND FLOOR	GENERAL EXHAUST	GREENHECK	SQ-80-VG	INLINE	175	0.50	DIRECT DRIVE	7.2	0.05	0.10	115	1	No	Yes	No	No	No	49	10

UNIT HEATER SCHEDULE (ELECTRIC)

UNIT DATA		BASIS OF DESIGN		PERFORMANCE DATA				ELECTRICAL DATA					
TAG	TYPE	MANUFACTURER	MODEL	AIRFLOW (CFM)	EAT DB (°F)	LAT DB (°F)	THROW (FT)	CAPACITY (KW)	STAGES	VOLTS	PHASE	EMERGENCY POWER	SCHEDULE NOTES
EUH1	FAN FORCED	INDEECO	UHIR	350	50.0	84.0	15	3.80	2	480	3	Yes	3,10

DUCTLESS SPLIT SYSTEM SCHEDULE (DX)

INDOOR UNIT DATA				BASIS OF DESIGN		INDOOR COOLING DATA				INDOOR ELECTRICAL DATA						OUTDOOR UNIT DATA		OUTDOOR PERFORMANCE DATA				COMPRESSOR DATA		OUTDOOR ELECTRICAL DATA					
TAG	LOCATION	FUNCTION	TYPE	MANUFACTURER	INDOOR MODEL	AIRFLOW (CFM)	TOTAL COOLING CAPACITY (MBH)	SENSIBLE COOLING CAPACITY (MBH)	FILTER	POWERED FROM OUTDOOR UNIT	MCA	MOCP	VOLTS	PHASE	EMERGENCY POWER	TAG	OUTDOOR MODEL	SUMMER AMBIENT (°F)	WINTER AMBIENT (°F)	EER	SEER	REFRIG TYPE	TYPE	MCA	MOCP	VOLTS	PHASE	EMERGENCY POWER	SCHEDULE NOTES
FCU-1	COMMUNICATIONS ROOM	COOLING ONLY	WALL MOUNTED	DAIKIN	FTX36NVJU	915	34.4	22.1	WASHABLE	Yes						ACCU-1	RK36NMV	95.0	5.0	9.1	15.9	R410A	SCROLL	17	20	208	1	Yes	4,5,6,10,12
FCU-2	MECHANICAL ROOM	COOLING ONLY	WALL MOUNTED	DAIKIN	FTX36NVJU	915	34.4	22.1	WASHABLE	Yes						ACCU-2	RK36NMV	95.0	5.0	9.1	15.9	R410A	SCROLL	17	20	208	1	Yes	4,5,6,10,12

AIR DEVICE SCHEDULE

UNIT DATA		BASIS OF DESIGN			GENERAL DATA			
TAG	FUNCTION	MANUFACTURER	MODEL	FACE SIZE	MATERIAL	INTEGRAL VOLUME DAMPER	MAX NC	SCHEDULE NOTES
S1	SUPPLY	PRICE	ASPD	24" X 24"	ALUMINUM	No	20	
S2	SUPPLY	PRICE	SDG	NECK SIZE + 1.75"	ALUMINUM	No	20	11
R1	RETURN	PRICE	80	24" X 12"	ALUMINUM	No	20	
R2	RETURN	PRICE	635	12" X 12"	ALUMINUM	No	20	
R3	RETURN	PRICE	80	24" X 24"	ALUMINUM	No	20	
E1	EXHAUST	PRICE	635	12" X 12"	ALUMINUM	No	20	
E2	EXHAUST	PRICE	635	24" X 12"	ALUMINUM	No	20	

LOUVER SCHEDULE

UNIT DATA			BASIS OF DESIGN		DIMENSIONS		PERFORMANCE			
TAG	LOCATION	FUNCTION	MANUFACTURER	MODEL	HEIGHT (IN)	WIDTH (IN)	AIR FLOW (CFM)	MAX APD (IN WG)	DAMPER TYPE	SCHEDULE NOTES
L1	FIRST FLOOR	EXHAUST LOUVER	GREENHECK	ESD-635HP	20	22	970	0.10	MOTORIZED	
L2	SECOND FLOOR	EXHAUST LOUVER	GREENHECK	ESD-635HP	12	18	175	0.10	MOTORIZED	

Last Plotted: 5/22/2025 5:58:35 PM
Filename: BM.360-BP-AMER.(USA)\60637899-SFNCANG\145903\399_SF-NC ANG_R21_M.rvt

Printed on ___% Post-Consumer Recycled Content Paper

©2023 AECOM Corporation

AECOM

PROJECT

NEW SECURITY FORCES BUILDING

PAYNE BLVD.
CHARLOTTE, NORTH CAROLINA 28208

CLIENT

NORTH CAROLINA AIR NATIONAL GUARD - 145TH AIRLIFT WING

ARCHITECT/DESIGNER

AECOM

277 W NATIONWIDE BLVD
COLUMBUS, OH 43215
614-464-4500

www.aecom.com

CONSULTANTS

REGISTRATION

STATE OF OHIO
RENAE FOCHESATO
E-90911
REGISTERED
PROFESSIONAL ENGINEER

05-30-2025

KEY PLAN

ISSUE/REVISION

I/R	DATE	DESCRIPTION
	05-30-2025	B-3 SUBMITTAL - FINAL
	03-14-2025	B-2 SUBMITTAL
	09-29-2023	B-1 SUBMITTAL

PROJECT NUMBER

60637899

SHEET TITLE

HVAC SCHEDULES

SHEET NUMBER

M701

MULTI-ZONE PACKAGED ROOFTOP UNIT (VAV)

1. THIS SEQUENCE OF OPERATION APPLIES TO THE FOLLOWING UNITS
   A. RTU1
2. RTU IS VARIABLE AIR VOLUME UNIT. THE UNIT HAS A DRAW THROUGH CONFIGURATION AND CONSIST OF ECONOMIZER, RELIEF FAN, FILTER, ELECTRIC HEATER, DIRECT EXPANSION COOLING COIL, HOT GAS REHEAT COIL, BAROMETRIC RELIEF DAMPER, AND INTEGRAL DDC CONTROLLER.
3. RTU SHALL OPERATE WITH MANUFACTURER'S STANDARD SEQUENCE OF OPERATION TO MAINTAIN DISCHARGE TEMPERATURE SETPOINT WITH UNIT'S INTEGRAL DDC CONTROLLER.
4. SYSTEM START UP/RTU OCCUPIED MODE: DURING THE OCCUPIED MODE, THE UNIT SHALL OPERATE TO MAINTAIN THE SPACE SETPOINTS OF 78°F (ADJ.) IN COOLING, AND 70°F (ADJ.) IN HEATING. WHEN THE RTU IS ENABLED TO START, THE UNIT'S RETURN AIR DAMPER SHALL OPEN, AND THE OUTDOOR AIR DAMPER SHALL CLOSE. ONCE THE DAMPERS ARE IN THE CORRECT POSITION, THE SUPPLY FANS SHALL START. ONCE THE SUPPLY FANS START, THE OUTDOOR AIR, AND RETURN AIR DAMPERS SHALL MODULATE TO PROVIDE THE MINIMUM OUTDOOR AIR FLOW. THE OUTSIDE AIR DAMPER SHALL BE NORMALLY CLOSED WHILE THE RETURN AIR DAMPER IS NORMALLY OPEN. AN OUTSIDE AIRFLOW MEASURING STATION SHALL MEASURE THE AMOUNT OF OUTSIDE AIR.
5. MORNING WARM UP / COOL DOWN: THE BAS SHALL ENABLE THE RTU TO START IN ADVANCE OF THE SCHEDULED OCCUPIED TIME, VIA AN ADAPTIVE OPTIMAL START SEQUENCE. THE ADAPTIVE OPTIMAL START SEQUENCE SHALL MINIMIZE THE UNOCCUPIED WARM-UP OR COOL-DOWN PERIOD WHILE ACHIEVING COMFORT CONDITIONS BY THE START OF SCHEDULED OCCUPIED PERIOD. THE UNIT SHALL ENTER A MORNING WARM UP / COOL DOWN MODE IF NECESSARY BASED ON SPACE TEMPERATURE. DURING MORNING WARM UP / COOL DOWN, THE MODULATING OUTDOOR AIR AND RELIEF DAMPERS SHALL REMAIN CLOSED, THE RETURN AIR DAMPER SHALL REMAIN OPEN. ONCE THE OCCUPIED SPACE TEMPERATURE SETPOINT IS REACHED, THE SYSTEM SHALL ENTER OCCUPIED MODE. SHOULD THE SPACE TEMPERATURES NOT REACH THE OCCUPIED SETPOINT BEFORE THE SCHEDULED OCCUPIED TIME, OR REACH SETPOINT TOO EARLY, THE ADAPTIVE OPTIMAL START SEQUENCE SHALL AUTOMATICALLY ADJUST FOR SUBSEQUENT STARTS.
6. NIGHT SETBACK / AHU UNOCCUPIED MODE: THE BAS SHALL SHUTDOWN THE AHU USING THE SYSTEM SHUTDOWN SEQUENCE. IF ANY SPACE TEMPERATURE DROPS BELOW THE UNOCCUPIED HEATING SETPOINT OR ABOVE THE UNOCCUPIED COOLING SETPOINT, THE AHU SHALL BE ENABLED. WHEN THE AHU IS ENABLED TO START, THE UNIT'S RETURN AIR DAMPER SHALL OPEN, AND THE OUTDOOR AIR AND RELIEF DAMPERS SHALL CLOSE. ONCE THE DAMPERS ARE IN THE CORRECT POSITION, THE SUPPLY FAN SHALL START. DURING UNOCCUPIED AHU OPERATION, THE OUTDOOR AIR DAMPER AND RELIEF DAMPER SHALL REMAIN CLOSED, AND THE RETURN DAMPER SHALL REMAIN OPEN. THE AHU SHALL CONTINUE TO OPERATE A MINIMUM OF 5 MINUTES (ADJUSTABLE) AFTER SATISFACTION OF THE UNOCCUPIED SPACE TEMPERATURE SETPOINT. THE SUPPLY AND RETURN FAN'S AIRFLOW SHALL BE SYNCED. THIS MODE SHALL BE ABLE TO BE INITIATED/SCHEDULED BY THE OWNER FOR ALL AHUS THROUGH THE BAS FRONT END.
7. SUPPLY FAN CONTROL: THE SUPPLY FANS SHALL RUN ANYTIME THE UNIT IS COMMANDED TO RUN. TO PREVENT SHORT CYCLING, THE SUPPLY FANS SHALL HAVE AN ADJUSTABLE MINIMUM RUNTIME. THE SUPPLY FAN SHALL MODULATE TO MAINTAIN A STATIC PRESSURE READING AT THE REMOTE STATIC PRESSURE TRANSMITTERS LOCATED IN THE MAIN SUPPLY AIR DUCT. THE STATIC PRESSURE SETPOINT SHALL BE MODIFIED AS NECESSARY BY THE BALANCING CONTRACTOR, CONTROL CONTRACTOR, OR THE COMMISSIONING AGENT DURING THE CONSTRUCTION, START UP, AND COMMISSIONING PROCESS.
8. RELIEF FAN CONTROL: THE RELIEF FAN SHALL RUN AS COMMANDED TO RUN. TO PREVENT SHORT CYCLING, THE RELIEF FAN SHALL HAVE AN ADJUSTABLE MINIMUM RUNTIME. THE RELIEF FAN SHALL BE CONTROLLED AND ENABLED INDEPENDENTLY FROM THE SUPPLY AIR FAN AND SPEED CONTROLLED IN SEQUENCE WITH THE OUTDOOR AIR DAMPER POSITION. THE RELIEF FAN SHALL BE ACTIVATED BASED ON THE OUTSIDE AIR DAMPER POSITION AND MODULATE BETWEEN AN ADJUSTABLE MINIMUM AND MAXIMUM AS THE OA DAMPER OPENS TO PROVIDE RELIEF.
9. COOLING CONTROL: COOLING SHALL BE ENABLED WHENEVER DEHUMIDIFICATION IS REQUIRED OR OUTSIDE AIR TEMPERATURE IS GREATER THAN 50°F (ADJUSTABLE) AND ECONOMIZER IS DISABLED, AND SUPPLY FAN STATUS IS ON. THE COOLING CAPACITY SHALL MODULATE TO MAINTAIN THE DISCHARGE AIR 55°F (ADJUSTABLE) TEMPERATURE SETPOINT. THE CONTROLS SHALL PROHIBIT THE UNIT FROM SIMULTANEOUSLY COOLING AND HEATING.
10. HEATING CONTROL: ELECTRIC HEATING SHALL BE ENABLED WHENEVER OUTSIDE AIR TEMPERATURE IS BELOW 50°F (ADJUSTABLE), AND SUPPLY FAN STATUS IS ON. MODULATE THE ELECTRIC HEAT TO MAINTAIN THE DISCHARGE AIR 55°F (ADJUSTABLE) TEMPERATURE SETPOINT. THE CONTROLS SHALL PROHIBIT THE UNIT FROM SIMULTANEOUSLY COOLING AND HEATING.
11. DEHUMIDIFICATION MODE: THE CONTROLLER SHALL MEASURE THE RETURN AIR HUMIDITY AND OVERRIDE THE COOLING SEQUENCE TO MAINTAIN RETURN AIR HUMIDITY AT OR BELOW 60% RH (ADJ.). DURING DEHUMIDIFICATION, THE HOT GAS REHEATING SHALL BE MODULATED TO MAINTAIN A SETPOINT OF 1°F (ADJ.) LESS THAN THE DISCHARGE COOLING SETPOINT. DEHUMIDIFICATION SHALL BE ENABLED WHENEVER THE SUPPLY FAN STATUS IS ON AND RETURN AIR HUMIDITY EXCEEDS 60% RH (ADJ.) FOR 5 MINUTES (ADJ.). DEHUMIDIFICATION SHALL REMAIN ACTIVE UNTIL THE RETURN AIR HUMIDITY DROPS BELOW A 5% RH DEADBAND (ADJUSTABLE).
12. SUPPLY TEMPERATURE RESET: THE COOLING DISCHARGE AIR SETPOINT SHALL BE CAPABLE OF BEING RESET INCREMENTALLY INCREASED BETWEEN 55°F TO 60°F. AS ZONE COOLING DEMAND INCREASE, A MINIMUM OF 3 (ADJ.) COOLING REQUEST, THE SETPOINT SHALL INCREMENTALLY RESET DOWN FROM 60°F TO 55°F. COOLING REQUEST SHALL BE DETERMINED AT THE AIR TERMINAL BOX UNIT LEVEL. SUPPLY AIR TEMPERATURE RESET SHALL BE OVERRIDDEN IF DEHUMIDIFICATION IS ENABLED.
13. ECONOMIZER CONTROL: WHEN THE OUTSIDE AIR ENTHALPY IS LESS THAN THE RETURN AIR ENTHALPY, THEN INITIATE THE ECONOMIZER MODE. MODULATE THE OUTDOOR AIR AND RETURN DAMPERS IN CONJUNCTION WITH THE RELIEF AIR FAN TO MAINTAIN THE MIXED AIR TEMPERATURE SETPOINT 2°F (ADJ.) LESS THAN THE COOLING DISCHARGE RESET SETPOINT. WHEN THE OUTSIDE AIR TEMPERATURE EXCEEDS 60°F (ADJ.) OR WHEN THE RETURN AIR ENTHALPY IS LOWER THAN THE OUTSIDE AIR ENTHALPY, LOSS OF SUPPLY OR RELIEF FAN STATUS, THEN THE ECONOMIZER CYCLE SHALL END.
14. SYSTEM SHUTDOWN: WHEN A UNIT IS COMMANDED OFF, THE SUPPLY AND RELIEF FANS SHALL BE DISABLED, THE OUTDOOR AIR DAMPER SHALL CLOSE, THE RETURN DAMPER SHALL OPEN, THE HEATING AND COOLING SHALL BE DISABLED.
15. THE BAS SHALL MONITOR
    A. ALL POINTS AVAILABLE ON THE RTU INTEGRAL CONTROLLER
    B. ALL ALARMS FROM THE RTU INTEGRAL CONTROLLER
    C. POINTS ON THE POINTS SCHEDULE IF THEY ARE NOT AVAILABLE THROUGH THE UNIT INTEGRAL CONTROLLER.
    D. ALARMS ON THE POINTS SCHEDULE IF THEY ARE NOT AVAILABLE THROUGH THE UNIT INTEGRAL CONTROLLER.

	HARDWARE POINTS				SOFTWARE POINTS			
POINT NAME	AI	AO	BI	BO	AV	BV	ALARM	TREND
SUPPLY FAN START/STOP				X				X
SUPPLY FAN HIGH STATIC							X	X
SUPPLY FAN SPEED	X							X
SUPPLY FAN STATUS			X					X
DISCHARGE AIR TEMP	X							X
OUTDOOR AIR DAMPER POSITION	X							X
OUTDOOR AIR TEMP	X							X
MIXED AIR TEMP	X							X
RETURN AIR TEMP	X							X
OUTDOOR AIRFLOW	X							X
DUCT STATIC PRESSURE	X							X
DUCT STATIC PRESSURE SETPOINT					X			X
COOLING CAPACITY					X			X
HEATING CAPACITY					X			X
RELIEF FAN START/STOP				X				X
RELIEF FAN STATUS			X					X
RELIEF FAN SPEED	X							X
EMERGENCY SHUTDOWN				X			X	X
SUPPLY SMOKE DETECTOR			X				X	X

1 M801 **MULTI-ZONE PACKAGED ROOFTOP UNIT (VAV) POINTS SCHEDULE**
NTS

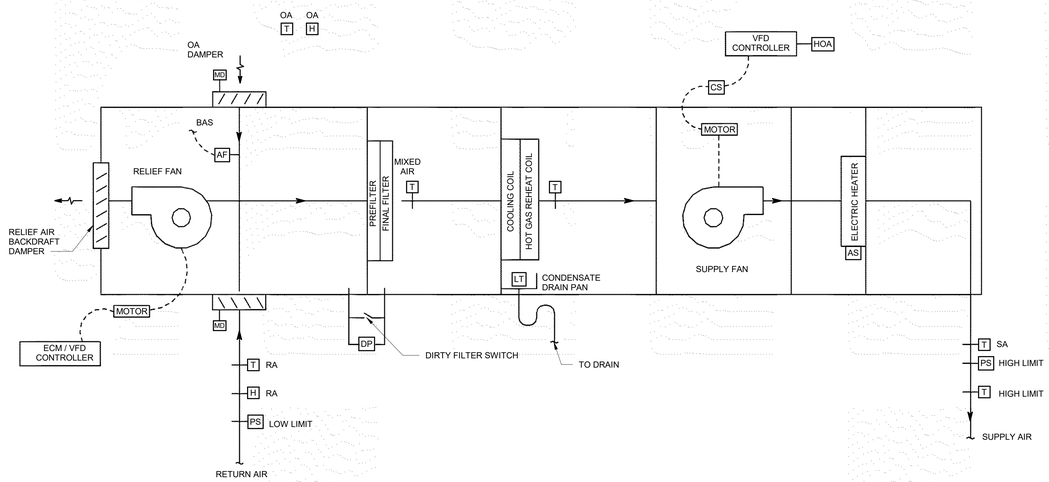

2 M801 **RTU CONTROL DIAGRAM**
NTS

CABINET UNIT HEATER AND UNIT HEATER W/ INTEGRAL THERMOSTAT

1. THIS SEQUENCE OF OPERATION APPLIES TO THE FOLLOWING UNITS
   A. EUH1
   B. CUH1
   C. CUH2
2. THE UNIT CONSISTS OF A SUPPLY FAN AND ELECTRIC HEATING COIL.
3. THE UNIT SHALL BE STARTED AND STOPPED THROUGH INTEGRAL CONTROLS. THE INTEGRAL TEMPERATURE SENSOR SHALL CYCLE THE FAN AND ELECTRIC HEATING COIL TO MAINTAIN THE DESIRED SPACE TEMPERATURE.
4. ALARM THE DDC SYSTEM IF THE UNIT FAILS TO OPERATE AS DETERMINED BY A CURRENT SENSOR.

	HARDWARE POINTS				SOFTWARE POINTS	
POINT NAME	AI	AO	BI	BO	ALARM	TREND
HEATER STATUS			X			X
FAN FAILURE					X	

3 M801 **UNIT HEATER POINTS SCHEDULE**
NTS

DUCTLESS SPLIT SYSTEM

1. THIS SEQUENCE OF OPERATION APPLIES TO THE FOLLOWING UNITS
   A. FCU/ACCU1
   B. FCU/ACCU2
2. THE SEQUENCE OF OPERATION FOR THE DUCTLESS SPLIT SYSTEM SHALL BE THE MANUFACTURER'S HARDWARE AND SOFTWARE WITH STANDARD OPERATING FUNCTIONS. THE DUCTLESS SPLIT SYSTEM, INCLUDING THE OUTDOOR UNITS AND INDOOR UNITS SHALL OPERATE UNDER THEIR INTERNAL CONTROLS.
3. ALL SETPOINTS, SCHEDULES, ALARMS, AND OPERATION FEATURES SHALL BE THROUGH THE MANUFACTURER'S CONTROLS. A BACNET INTERFACE SHALL BE PROVIDED FOR ALL FEATURES TO BE VIEWED, ADJUSTED, AND MONITORED THROUGH BMS.
4. THE FACTORY SUPPLIED WALL-MOUNTED TEMPERATURE SENSOR SHALL CONTROL THE INDOOR UNIT TO MAINTAIN SPACE TEMPERATURE SETPOINT.
5. ALL FAN COIL UNITS SHALL HAVE AN INTEGRAL OR EXTERNAL CONDENSATE OVERFLOW SWITCH INTERLOCKED TO SHUTDOWN THE FAN COIL UNITS.

	HARDWARE POINTS							
POINT NAME	AI	AO	BI	BO	MI	MO	ALARM	TREND
ON/OFF STATUS			X					X
ON/OFF COMMAND				X				X
MODE STATUS					X			X
MODE COMMAND						X		X
ZONE TEMP SETPOINT	X							X
FAN SPEED STATUS					X			X
FAN SPEED COMMAND						X		X
ZONE TEMP	X							X
ERROR CODE					X		X	

4 M801 **DUCTLESS SPLIT POINTS SCHEDULE**
NTS

SINGLE DUCT TERMINAL BOX WITH ELECTRIC REHEAT

1. THE VAV BOX CONTROLLER SHALL CONTROL THE VAV BOX DAMPER AND ELECTRIC REHEAT COIL TO MAINTAIN THE SPACE TEMPERATURE SETPOINT. THE VAV BOX SHALL BE PROVIDED WITH A DDC CONTROLLER. ALL SETPOINTS SHALL BE ADJUSTABLE AND MONITORED THROUGH BAS.
2. OCCUPIED MODE
   A. THE VAV BOX SHALL BE CONTROLLED IN OCCUPIED/UNOCCUPIED MODES BASED ON A TIME OF DAY SCHEDULE UNLESS OCCUPANCY STATUS IS OVERRIDDEN AT THE THERMOSTAT.
   B. ON A RISE IN SPACE TEMPERATURE ABOVE THE SPACE SETPOINT, THE VAV AIR DAMPER SHALL MODULATE OPEN FROM ITS MINIMUM POSITION TO ITS MAXIMUM POSITION TO MAINTAIN THE SPACE OCCUPIED SETPOINT.
   C. AS THE SPACE TEMPERATURE DROPS BELOW THE SPACE TEMPERATURE SETPOINT, THE VAV AIR DAMPER SHALL MODULATE CLOSE FROM ITS MAXIMUM POSITION TO ITS MINIMUM POSITION TO MAINTAIN THE SPACE OCCUPIED SETPOINT.
   D. IF THE SPACE TEMPERATURE CONTINUES TO FALL BELOW THE SPACE TEMPERATURE SETPOINT AND THE VAV BOX IS AT MINIMUM POSITION, ENABLE ELECTRIC REHEAT AND MODULATE TO MAINTAIN THE SPACE TEMPERATURE SETPOINT.
3. UNOCCUPIED MODE
   A. UNOCCUPIED AIRFLOW RESET: ALL TERMINAL BOXES SHALL HAVE A PROGRAMMABLE UNOCCUPIED AIRFLOW SETPOINT THAT CAN BE USED TO REDUCED THE MINIMUM AIRFLOW DURING UNOCCUPIED TIMES. UNOCCUPIED TERMINAL BOX AIRFLOW RESET IS ACTIVATED THROUGH THE DDC SYSTEM FOR AN ENTIRE AHU SYSTEM.
   B. UNOCCUPIED SPACE TEMPERATURE RESET: ALL TERMINAL BOXES SHALL HAVE A PROGRAMMABLE UNOCCUPIED COOLING AND HEATING SPACE TEMPERATURE SETPOINT THAT CAN BE USED TO REDUCE THE AMOUNT OF COOLING AND HEATING DURING UNOCCUPIED PERIODS. UNOCCUPIED SPACE TEMPERATURE RESET IS ACTIVATED THROUGH THE DDC SYSTEM FOR AN ENTIRE AHU SYSTEM.

	HARDWARE POINTS				SOFTWARE POINTS	
POINT NAME	AI	AO	BI	BO	ALARM	TREND
VAV DAMPER POSITION		X				X
HEATING OUTPUT		X				X
DISCHARGE AIRFLOW	X					X
DISCHARGE TEMP	X					X
ZONE TEMP	X					X
ZONE SETPOINT		X				X
LOCAL OVERRIDE			X			X
OCCUPANCY SENSOR			X			X

5 M801 **TERMINAL BOX POINTS SCHEDULE**
NTS

AECOM

PROJECT
NEW SECURITY FORCES BUILDING
PAYNE BLVD.
CHARLOTTE, NORTH CAROLINA 28208

CLIENT
NORTH CAROLINA AIR NATIONAL GUARD - 145TH AIRLIFT WING

ARCHITECT/DESIGNER
AECOM
277 W NATIONWIDE BLVD
COLUMBUS, OH 43215
614-464-4500
www.aecom.com

CONSULTANTS

REGISTRATION

STATE OF OHIO
RENAE FOCHESATO
E-90911
REGISTERED
PROFESSIONAL ENGINEER
05-30-2025

KEY PLAN

ISSUE/REVISION

I/R	DATE	DESCRIPTION
	05-30-2025	B-3 SUBMITTAL - FINAL
	03-14-2025	B-2 SUBMITTAL
	09-29-2023	B-1 SUBMITTAL

PROJECT NUMBER
60637899

SHEET TITLE
HVAC SEQUENCE OF OPERATIONS

SHEET NUMBER
M801

©2023 AECOM Corporation

Printed on ___% Post-Consumer Recycled Content Paper

14-MECHANICAL-14.90-M802-HVAC SEQUENCE OF OPERATIONS ARCH E1 30"x42"
Designer: DES Checked: CHK Approved: APR
Project Management Initials: MR

EXHAUST FAN (CONSTANT VOLUME, ON/OFF)

1. THIS SEQUENCE APPLIES TO EFS LISTED BELOW THAT ARE CONSTAT AIR VOLUME FANS.
   A. EF1
   B. EF2
2. SYSTEM START UP: THE FAN SHALL BE CAPABLE OF BEING STARTED AND STOPPED MANUALLY OR SCHEDULED VIA THE DDC SYSTEM. FAN SHALL BE INTERLOCKED TO DAMPER SO THAT FAN CANNOT START UNTIL DAMPER IS FULLY OPEN.

	HARDWARE POINTS				SOFTWARE POINTS	
POINT NAME	AI	AO	BI	BO	ALARM	TREND
EXHAUST AIR DAMPER STATUS			X			X
FAN STATUS			X			X
EXHAUST AIR DAMPER START/STOP				X		X
FAN COMMAND				X		X
EXHAUST AIR DAMPER FAILURE					X	
FAN FAILURE					X	
FAN IN HAND					X	

1 EXHAUST FAN POINTS SCHEDULE
M802 NTS

WATER METER

1. THE CONTROLLER SHALL MONITOR THE WATER METER FOR WATER CONSUMPTION.
2. THE CONTROLLER SHALL PROVIDE TOTAL WATER CONSUMPTION HISTORY.
3. AN ALARM SHALL BE GENERATED IF SIGNAL FROM THE WATER METER IS LOST.

	HARDWARE POINTS				SOFTWARE POINTS			
POINT NAME	AI	AO	BI	BO	AV	BV	ALARM	TREND
WATER FLOW RATE	X							X
TOTAL FLOW					X			X

2 WATER METER POINTS SCHEDULE
M802 NTS

ELECTRIC METER

1. THE CONTROLLER SHALL MONITOR THE ELECTRIC METER FOR ENERGY CONSUMPTION.
2. THE CONTROLLER SHALL PROVIDE TOTAL ENERGY CONSUMPTION HISTORY.
3. AN ALARM SHALL BE GENERATED IF SIGNAL FROM THE ELECTRIC METER IS LOST.

	HARDWARE POINTS				SOFTWARE POINTS			
POINT NAME	AI	AO	BI	BO	AV	BV	ALARM	TREND
REAL POWER (TOTAL)	X							X
TOTAL ENERGY					X			X
HISTORICAL PEAK DEMAND					X			X
DEMAND POWER					X			X
RMS VOLTAGE FOR PHASE A	X						X*	X
RMS VOLTAGE FOR PHASE B	X						X*	X
RMS VOLTAGE FOR PHASE C	X						X*	X
RMS CURRENT FOR PHASE A	X							X
RMS CURRENT FOR PHASE B	X							X
RMS CURRENT FOR PHASE C	X							X
AVERAGE LINE FREQUENCY					X			X
* ALARM CONDITION: VOLT<0.9*NOMINAL								

3 ELECTRIC METER POINTS SCHEDULE
M802 NTS

GENERATOR

1. THE CONTROLLER SHALL PROVIDE A SINGLE VIEW FOR THE GENERATOR AND FUEL TANK MONITORING STATUS AND ALARMS. THE BMS SYSTEM SHALL DISPLAY VIA A GRAPHICAL USER INTERFACE SHOWING ALL MONITORED POINTS FOR THE GENERATOR AND FUEL TANK. THE USER SHALL HAVE THE ABILITY TO RECEIVE ALARMS FROM THE BMS BASED ON STATUS POINTS.

	HARDWARE POINTS				SOFTWARE POINTS			
POINT NAME	AI	AO	BI	BO	AV	BV	ALARM	TREND
GENERATOR FAULT STATUS			X				X	X
GENERATOR START/STOP				X				X
GENERATOR ENGINE STATUS			X					X
GENERATOR LOAD	X							X
AVERAGE LINE FREQUENCY	X							X
POWER FACTOR	X							X
RMS VOLTAGE FOR PHASE A	X							X
RMS VOLTAGE FOR PHASE B	X							X
RMS VOLTAGE FOR PHASE C	X							X
RMS CURRENT FOR PHASE A	X							X
RMS CURRENT FOR PHASE B	X							X
RMS CURRENT FOR PHASE C	X							X
GENERATOR HIGH EXHAUST TEMPERATURE			X				X	X
GENERATOR HIGH VIBRATION			X				X	X
RPM	X							X
OIL PRESSURE	X							X
OIL TEMPERATURE	X							X
COOLANT LEVEL	X							X
COOLANT TEMP	X							X
ENGINE RUNNING HOURS					X			X
GENERATOR FUEL LEVEL	X							X
GENERATOR FUEL PUMP FAULT			X				X	X

4 GENERATOR POINTS SCHEDULE
M802 NTS

EMERGENCY AIR DISTRIBUTION SHUTOFF

1. PROVIDE EMERGENCY SHUTOFF SWITCH(ESO) AT THE LOCATIONS INDICATED ON THE PLANS.
2. THE EMERGENCY SHUTOFF SWITCH SHALL BE INTERLOCKED WITH THE BMS AND FIRE ALARM SYSTEM AND SHALL GENERATE AN ALARM UPON ACTIVATION.
3. UPON ACTIVATION OF THE EMERGENCY SHUTOFF SWITCH, ALL DAMPERS LEADING TO THE OUTSIDE SHALL BE CLOSED WITHIN 30 SECONDS AND ALL THE ASSOCIATED FANS SHALL BE DISABLED.
4. THE ALARM SHALL BE MANUALLY RESET AFTER THE THREAT IS ELIMINATED.

THE NEW BAS SYSTEM SHALL INTEGRATE WITH THE EXISTING BASE-WIDE SYSTEM AS FOLLOWS:

A. THE NEW BAS SYSTEM SHALL BE BACNET/IP OR BACNET MS/TP COMPLIANT AND CAPABLE OF THIRD-PARTY INTEGRATION.
B. THE BAS SHALL OPERATE HVAC EQUIPMENT INDEPENDENTLY OF THE BASE-WIDE SYSTEM IN THE EVENT OF A NETWORK OR COMMUNICATION FAILURE.
C. THE BAS SYSTEM SHALL PROVIDE A BACNET INTERFACE OR AN APPROVED PROTOCOL GATEWAY (MODBUS, LON, ETC.) TO ALLOW CONNECTION TO THE EXISTING BASE-WIDE SYSTEM.
D. ALL REQUIRED DATA POINTS SHALL BE EXPOSED TO THE BASE-WIDE SYSTEM, INCLUDING BUT NOT LIMITED TO: TEMPERATURES, SETPOINTS, VALVE POSITIONS, EQUIPMENT STATUS, ALARMS, AND RUNTIME HOURS.
E. ALL ALARMS AND FAULTS FROM HVAC EQUIPMENT SHALL BE AVAILABLE TO THE BASE-WIDE SYSTEM, THROUGH THIS BUILDINGS BAS SYSTEM.
F. TREND DATA SHALL BE LOGGED LOCALLY AND MADE ACCESSIBLE VIA BACNET OR EXPORTABLE FILE FORMAT.
G. THE BAS SYSTEM SHALL INCLUDE FULLY DEVELOPED GRAPHICS AND EQUIPMENT NAVIGATION SCREENS.
H. IF BAS SYSTEM INTEGRATION IS ACHIEVED, ALL GRAPHICS FILES, POINT LISTS, AND NAVIGATION LAYOUTS SHALL BE PROVIDED IN A FORMAT COMPATIBLE WITH THE EXISTING BASE-WIDE SYSTEM.
I. THE CONTRACTOR SHALL COORDINATE WITH BASE IT TO ESTABLISH NETWORK CONNECTIVITY (MDF/IDF ROOM, VLAN, OR OTHER AS REQUIRED).
J. ALL POINTS AND CONNECTIONS TO THE BASE-WIDE SYSTEM SHALL BE DEMONSTRATED AND VERIFIED DURING THE COMMISSIONING PHASE.
K. A COMPLETE SET OF AS-BUILT CONTROLS DRAWINGS, POINT LISTS, DEVICE ADDRESS TABLES, AND NETWORK DIAGRAMS SHALL BE PROVIDED FOR BASE RECORDS.
L. REFER TO SPECIFICATIONS FOR FURTHER INFORMATION.

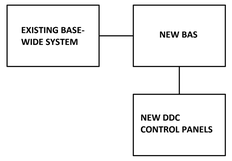

AECOM

PROJECT
NEW SECURITY FORCES BUILDING
PAYNE BLVD.
CHARLOTTE, NORTH CAROLINA 28208

CLIENT
NORTH CAROLINA AIR NATIONAL GUARD - 145TH AIRLIFT WING

ARCHITECT/DESIGNER
AECOM
277 W NATIONWIDE BLVD
COLUMBUS, OH 43215
614-464-4500

www.aecom.com

CONSULTANTS

REGISTRATION

STATE OF OHIO
RENAE FOCHESATO
E-90911
REGISTERED
PROFESSIONAL ENGINEER
05-30-2025

KEY PLAN

ISSUE/REVISION

I/R	DATE	DESCRIPTION
	05-30-2025	B-3 SUBMITTAL - FINAL
	03-14-2025	B-2 SUBMITTAL
	09-29-2023	B-1 SUBMITTAL

PROJECT NUMBER
60637899

SHEET TITLE
HVAC SEQUENCE OF OPERATIONS

SHEET NUMBER
M802

Last Plotted: 5/22/2025 5:59:38 PM
Filename: BIM 360://P-AMER (USA)/60637899-SFNCANG/1459083799_SF-NC ANG_R21_M.rvt
Printed on: ___% Post-Consumer Recycled Content Paper
©2023 AECOM Corporation

ELECTRICAL ABBREVIATIONS

NOTE: NOT ALL ABBREVIATIONS MAY BE USED.

ABBREVIATION	DESCRIPTION
1P	1 POLE (2P,3P,4P, ETC.)
1PH	SINGLE-PHASE
2/C	2 CONDUCTOR (3/C, 4/C, ETC.)
2W	2-WIRE (3W, 4W, ETC.)
3PH	THREE-PHASE
A	AMPERE
A/C	AIR CONDITIONING UNIT
A/E	ARCHITECT/ENGINEER
A/V	AUDIO / VISUAL
AC	ALTERNATING CURRENT
ACT	ABOVE COUNTERTOP
ADDL	ADDITIONAL
ADJ	ADJACENT, ADJOINING
ADO	AUTOMATIC DOOR OPENER
AF	AMPERE FRAME OR AIR FUSE
AFC	AVAILABLE FAULT CURRENT
AFCI	ARC FAULT CIRCUIT INTERRUPTER
AFF	ABOVE FINISHED FLOOR
AFG	ABOVE FINISHED GRADE
AHJ	AUTHORITY HAVING JURISDICTION
AHU	AIR HANDLING UNIT
AIC	AMPERE INTERRUPTING CAPACITY
AL	ALUMINUM
ALT	ALTERNATE
AMB	AMBIENT
AMP	AMPLIFIER
APPROX	APPROXIMATELY
ARCH	ARCHITECT, ARCHITECTURAL
AT	AMPERE TRIP
ATS	AUTOMATIC TRANSFER SWITCH
AUTO	AUTOMATIC
AUX	AUXILIARY
AWG	AMERICAN WIRE GAUGE
BAT	BATTERY
BKR	BREAKER
BLDG	BUILDING
BMS	BUILDING MANAGEMENT SYSTEM
BYP	BYPASS
C	CONDUIT
CAP	CAPACITY
CAT	CATALOG
CATV	COMMUNITY ANTENNA TELEVISION
CB	CIRCUIT BREAKER
CCTV	CLOSED CIRCUIT TELEVISION
CD	CANDELA
CD	CONSTRUCTION DOCUMENTS
CFCI	CONTRACTOR FURNISHED, CONTRACTOR INSTALLED
CFOI	CONTRACTOR FURNISHED, OWNER INSTALLED
CKT	CIRCUIT
CLF	CURRENT LIMITING FUSE
CLG	CEILING
CMU	CONCRETE MASONRY UNIT
COAX	COAXIAL CABLE
COMB	COMBINATION
COMM	COMMUNICATION
CONC	CONCRETE
CONN	CONNECTION
CONST	CONSTRUCTION
CONT	CONTINUE, CONTINUATION
CONTR	CONTRACTOR
CPT	CONTROL POWER TRANSFORMER
CR	CRITICAL
CRI	COLOR RENDERING INDEX
CT	CURRENT TRANSFORMER
CTR	CENTER
CU	COPPER
DB	DUCTBANK
DBA	DECIBEL
DC	DIRECT CURRENT
DEG C	DEGREES CELSIUS
DEG F	DEGREES FAHRENHEIT
DEMO	DEMOLITION
DIA	DIAMETER
DIAG	DIAGRAM
DISC	DISCONNECT
DIST	DISTRIBUTION
DN	DOWN
DPDT	DOUBLE POLE, DOUBLE THROW
DPST	DOUBLE POLE, SINGLE THROW
DS	DISCONNECT SWITCH
DWG	DRAWING
E.O.	ELECTRICALLY OPERATED
EC	ELECTRICAL CONTRACTOR
EG	EQUIPMENT GROUND
EL	ELEVATION
ELEC	ELECTRIC, ELECTRICAL
EM	EMERGENCY
EMI	ELECTROMAGNETIC INTERFERENCE
EMT	ELECTRICAL METALLIC TUBING
EPMS	ELECTRICAL POWER MANAGEMENT SYSTEM
EPO	EMERGENCY POWER OFF
EWC	ELECTRIC WATER COOLER
EWH	ELECTRIC WATER HEATER
EXIST	EXISTING
EXP	EXPLOSION PROOF
FA	FIRE ALARM
FAAP	FIRE ALARM ANNUNCIATOR PANEL
FABP	FIRE ALARM BOOSTER POWER SUPPLY PANEL
FACP	FIRE ALARM CONTROL PANEL
FBO	FURNISHED BY OTHERS
FC	FOOTCANDLE
FCU	FAN COIL UNIT
FIXT	FIXTURE
FLA	FULL LOAD AMPS
FLEX	FLEXIBLE METALLIC CONDUIT
FLR	FLOOR
FLT	FLOODLIGHT
FLUOR	FLUORESCENT
FT	FEET OR FOOT
FU	FUSE
G/GRD/GND	GROUND
GA	GAUGE
GAL	GALLON
GC	GENERAL CONTRACTOR
GEN	GENERATOR
GFCI	GROUND FAULT CIRCUIT INTERRUPTER
GRC	GALVANIZED RIGID CONDUIT
GTB	GROUND TERMINAL BOX
HH	HANDHOLE
HOA	HAND-OFF-AUTOMATIC
HP	HORSEPOWER
HRG	HIGH RESISTANCE GROUND
HV	HIGH VOLTAGE
HVAC	HEATING, VENTILATING AND AIR CONDITIONING
HZ	HERTZ
I/O	INPUT / OUTPUT
ICCB	INSULATED CASE CIRCUIT BREAKER
IESNA	ILLUMINATION ENGINEERING SOCIETY OF NORTH AMERICA
IG	ISOLATED GROUND
IMC	INTERMEDIATE METAL CONDUIT
IR	INFRARED
J-BOX	JUNCTION BOX
kV	KILOVOLT
kV/H	KILOVOLT AMPERE PER HOUR
kVA	KILOVOLT AMPERE
kVAR	KILOVOLT AMPERE REACTIVE
kW	KILOWATT
kWH	KILOWATT HOUR
LAN	LOCAL AREA NETWORK
LCP	LIGHTING CONTROL PANEL

ELECTRICAL ABBREVIATIONS

NOTE: NOT ALL ABBREVIATIONS MAY BE USED.

ABBREVIATION	DESCRIPTION
LED	LIGHT EMITTING DIODE
LF	LINEAR FEET (FOOT)
LP	LIGHT POLE
LRA	LOCKED ROTOR AMPS
LRP	LIGHTING RELAY PANEL
LS	LIFE SAFETY
LSIG	LONG, SHORT, INSTANTANEOUS, GROUND
LTG	LIGHTING
LTNG	LIGHTNING
LV	LOW VOLTAGE
MAX	MAXIMUM
MC	METAL-CLAD
MCA	MINIMUM CIRCUIT AMPS
MCB	MAIN CIRCUIT BREAKER
MCC	MOTOR CONTROL CENTER
MCCB	MOLDED CASE CIRCUIT BREAKER
MDP	MAIN DISTRIBUTION PANEL
MECH	MECHANICAL
MFR	MANUFACTURER
MH	MANHOLE
MIN	MINIMUM
MISC	MISCELLANEOUS
MLO	MAIN LUGS ONLY
MOCP	MAXIMUM OVERCURRENT PROTECTION
MSB	MAIN SWITCHBOARD
MT,MTD,MTG	MOUNT, MOUNTED, MOUNTING
MTR	MOTOR, MOTORIZED
MTS	MANUAL TRANSFER SWITCH
MV	MEDIUM VOLTAGE
MVA	MEGAVOLT-AMPERE
MW	MEGAWATT
N.C.	NORMALLY CLOSED
N.O.	NORMALLY OPEN
N/A	NOT APPLICABLE
NEC	NATIONAL ELECTRICAL CODE
NEMA	NATIONAL ELECTRICAL MANUFACTURERS ASSOCIATION
NEUT OR N	NEUTRAL
NFPA	NATIONAL FIRE PROTECTION ASSOCIATION
NIC	NOT IN CONTRACT
NL	NIGHT LIGHT
NTS	NOT TO SCALE
OC	ON CENTER
OFCI	OWNER FURNISHED, CONTRACTOR INSTALLED
OFOI	OWNER FURNISHED, OWNER INSTALLED
OL	OVERLOAD
P	POLE
PA	PUBLIC ADDRESS
PB	PULL BOX, OR PUSHBUTTON
PF	POWER FACTOR
PH	PHASE
PIV	POST INDICATOR VALVE
PLC	PROGRAMMABLE LOGIC CONTROLLER
PNL	PANEL
PP	POWER POLE
PR	PAIR
PRI	PRIMARY
PT	POTENTIAL TRANSFORMER
PVC	POLYVINYL CHLORIDE (PLASTIC)
PWR	POWER
QTY	QUANTITY
RCP	REFLECTED CEILING PLAN
RCPT	RECEPTACLE
RGS	RIGID GALVANIZED STEEL
RMS	ROOT MEAN SQUARE
RTU	ROOF TOP UNIT
SA	SURGE ARRESTER
SCC	SHORT CIRCUIT CAPACITY
SEC	SECONDARY
SF	SQUARE FOOT (FEET)
SP	SPARE
SPD	SURGE PROTECTIVE DEVICE
SPEC	SPECIFICATION
SPST	SINGLE POLE, SINGLE THROW
STD	STANDARD
SW	SWITCH
SWBD	SWITCHBOARD
SWGR	SWITCHGEAR
SYM	SYMMETRICAL
SYS	SYSTEM
T/C	TIME CLOCK
TL	TWIST LOCK
TR	TAMPER RESISTANT
TTB	TELEPHONE TERMINAL BOARD
TV	TELEVISION
TYP	TYPICAL
UC	UNDER COUNTER
UG	UNDERGROUND
UL	UNDERWRITERS LABORATORY
UNO	UNLESS NOTED OTHERWISE
UPS	UNINTERRUPTIBLE POWER SUPPLY
UTIL	UTILITY
V	VOLT, VOLTAGE
VA	VOLT AMPERE
VAR	VOLT AMPERE REACTIVE
VFD	VARIABLE FREQUENCY DRIVE
W	WATT
W/	WITH
W/O	WITHOUT
WG	WIRE GUARD
WH	WATER HEATER
WP	WEATHERPROOF
XFER	TRANSFER
XFMR	TRANSFORMER

LIGHTING PLAN SYMBOLS

NOTE: NOT ALL SYMBOLS MAY BE USED.

SYMBOL	DESCRIPTION
x $Y	WALL SWITCH WITH COVERPLATE, STANDARD MOUNTING HEIGHT 48" A.F.F. : x INDICATES SWITCH AND LUMINAIRE GROUPS, Y INDICATES THE FOLLOWING: BLANK =SINGLE POLE 2 =DOUBLE POLE (2-WAY) 3 =THREE POLE (3-WAY) 4 =FOUR POLE (4-WAY) D =DIMMER SWITCH T =TIMER SWITCH WP =WEATHERPROOF SWITCH
$3,D	WALL MOUNTED DIMMER SWITCH WITH "TRUE" 3-WAY DIMMING CAPABILITIES
$OS	WALL MOUNTED SENSOR, SINGLE SWITCHING CONTROL
$OSD	WALL MOUNTED SENSOR W/DIMMING
$LV	WALL MOUNTED LOW VOLTAGE MOMENTARY SWITCH
$LVD	WALL MOUNTED LOW VOLTAGE LIGHT SWITCH WITH ON/OFF AND RAISE/LOWER
OS	CEILING MOUNTED OCCUPANCY/VACANCY SENSOR
DS	CEILING MOUNTED DAYLIGHT SENSOR
	EMERGENCY BATTERY PACK (SEE FIXTURE SCHEDULE)
	WALL / CEILING MOUNTED EXIT SIGN (SEE FIXTURE SCHEDULE), DIRECIONAL ARROW(S) AS INDICATED ON PLANS, SHADED AREA INDICATES ILLUMINATED FACE(S).
	LIGHTING FIXTURES
	CEILING MOUNTED (SEE FIXTURE SCHEDULE).
	CEILING MOUNTED DOWNLIGHT (SEE FIXTURE SCHEDULE).
	WALL MOUNTED (SEE FIXTURE SCHEDULE).
	LIGHTING FIXTURE ON CRITICAL BRANCH (HOSP.) OR OPTIONAL STANDBY (CLINIC)
N/L	LIGHTING FIXTURE ON LIFE SAFETY BRANCH (HOSP.) OR EMERGENCY (CLINIC). (N/L INDICATES NIGHT LIGHT)
	XX x,y ← SWITCH CONTROL CIRCUIT NUMBER → # FIXTURE TYPE

ONE-LINE DIAGRAM SYMBOLS

NOTE: NOT ALL SYMBOLS MAY BE USED.

SYMBOL	DESCRIPTION	SYMBOL	DESCRIPTION
X, Y	DISCONNECT SWITCH X INDICATES SIZE, Y INDICATES NUMBER OF POLES IF OTHER THAN 3.	Z X Y	CIRCUIT BREAKER X INDICATES FRAME SIZE, Y INDICATES TRIP RATING, Z INDICATES NUMBER OF POLES IF OTHER THAN 3.
X, Z Y	FUSED SWITCH X INDICATES SWITCH SIZE, Y INDICATES FUSE SIZE, Z INDICATES NUMBER OF POLES IF OTHER THAN 3.	Z X LSI Y	DRAWOUT CIRCUIT BREAKER X INDICATES FRAME SIZE, Y INDICATES TRIP RATING, Z INDICATES NUMBER OF POLES IF OTHER THAN 3.
	TRANSFER SWITCH AMP RATING, NUMBER OF POLES, ETC. AS INDICATED OR SPECIFIED.	52 X Y	MEDIUM VOLTAGE DRAWOUT CIRCUIT BREAKER X INDICATES CT RATIO, Y INDICATES FRAME SIZE
	AUTOMATIC TRANSFER SWITCH WITH BYPASS ISOLATION . AMP RATING, NUMBER OF POLES, ETC. AS INDICATED OR SPECIFIED.		TRANSFORMER KVA, PRI & SEC VOLTAGE, K-RATING, ETC. AS INDICATED OR SPECIFIED.
			ISOLATION TRANSFORMER KVA, PRI & SEC VOLTAGE, K-RATING, ETC. AS INDICATED OR SPECIFIED.
	FUSED POTENTIAL TRANSFORMER		CURRENT TRANSFORMER
SA	SURGE ARRESTER (QUANTITY OF 3 U.N.O.)	X	FUSE X INDICATES SIZE
	EARTH GROUND	XX Y	MOTOR CONTROLLER: XX INDICATES TYPE, Y INDICATES NEMA SIZE (00,0,1,2,3,4,5, ETC.) NR= FULL VOLTAGE, NON-REVERSING STARTER R= FULL VOLTAGE, REVERSING STARTER SS = SOLID STATE STARTER VF= VARIABLE FREQUENCY DRIVE
AS	AMMETER SWITCH		
VS	VOLTMETER SWITCH		
GFP	GROUND FAULT PROTECTOR		
SPD	SURGE PROTECTIVE DEVICE		
EPO	EMERGENCY POWER OFF		
CP	CONTROL PANEL		
A	AMMETER		
DM	DIGITAL MULTIFUNCTION METER		
V	VOLTMETER		
W	WATT METER	K	KEYED INTERLOCK
G	GENERATOR	XXX	PANELBOARD
M	MOTOR (M=HP)		

POWER PLAN SYMBOLS

NOTE: NOT ALL SYMBOLS MAY BE USED.

SYMBOL	DESCRIPTION
X Y Z	NORMAL POWER DUPLEX RECEPTACLE WITH COVERPLATE, NEMA 5-20R, STANDARD MOUNTING HEIGHT 18" A.F.F. UNLESS OTHERWISE NOTED: X INDICATES CIRCUIT NUMBER, Y INDICATES NON-STANDARD MOUNTING HEIGHT, AND Z INDICATES THE FOLLOWING: COPY = COPIER; MTD 42" A.F.F. REF = REFRIGERATOR; MTD 48" A.F.F. T = TAMPER RESISTANT TV = TELEVISION; MTD 72" A.F.F. U = USB UC = UNDER COUNTER V = VENDING, MTD 48" A.F.F. WP = WEATHER PROOF XX" = MTD AT XX" AFF
	ABOVE COUNTER RECEPTACLE, MOUNT AT 4' UON.
	EMERGENCY DUPLEX RECEPTACLE, SAME NOTATION AS ABOVE.
	CRITICAL UPS DUPLEX RECEPTACLE, SAME NOTATION AS ABOVE.
	GFCI RECEPTACLE INSTALLED IN READILY ACCESSIBLE LOCATION, SAME NOTATION AS ABOVE.
	EMERGENCY GFCI RECEPT. INSTALLED IN READILY ACCESSIBLE LOCATION, SAME NOTATIONS AS ABOVE.
	CRITICAL UPS GFCI RECEPTACLE. INSTALLED IN READILY ACCESSIBLE LOCATION, SAME NOTATIONS AS ABOVE.
	DOUBLE DUPLEX RECEPTACLE , SAME NOTATION AS ABOVE.
	EMERGENCY DOUBLE DUPLEX RECEPTACLE, SAME NOTATION AS ABOVE.
	CRITICAL UPS DOUBLE DUPLEX RECEPTACLE, SAME NOTATION AS ABOVE.
	SIMPLEX RECEPTACLE, SAME NOTATION AS ABOVE.
	EMERGENCY SIMPLEX RECEPTACLE, SAME NOTATION AS ABOVE.
	CRITICAL UPS SIMPLEX RECEPTACLE, SAME NOTATION AS ABOVE.
	SPECIAL RECEPTACLE, SAME NOTATION AS ABOVE.
	EMERGENCY SPECIAL RECEPTACLE, SAME NOTATION AS ABOVE.
	CRITICAL UPS SPECIAL RECEPTACLE, SAME NOTATION AS ABOVE.
	COMBINATION ROOF MOUNTED LIGHT AND WEATHERPROOF RECEPTACLE
	FLOOR BOX WITH FLUSH MOUNTED DEVICE
	CEILING MOUNTED DUPLEX RECEPTACLE
J	JUNCTION BOX / EQUIPMENT CONNECTION
M	1-PHASE MOTOR CONNECTION
M	3-PHASE MOTOR CONNECTION
	MANUAL MOTOR STARTER, TOGGLE TYPE, WITH THERMAL OVERLOAD DEVICE
	MAGNETIC STARTER
	NON-FUSED DISCONNECT SWITCH
	FUSED DISCONNECT SWITCH, FUSE SIZE AS SHOWN
	COMBINATION MOTOR STARTER/DISCONNECT
	CONTROL STATION: SEE CONTROL DIAGRAMS OR PLAN SHEETS FOR TYPE AND QUANTITY OF DEVICES
	PANELBOARD (SIZED TO SCALE)
	POWER TRANSFORMER (SIZED TO SCALE)
	GROUND ROD
	GROUND BONDING POINT TO STEEL STRUCTURE, REBAR, PIPE, ETC.
	GROUNDING CONNECTION (TYPE AS SHOWN OR NOTED)
	UNDERGROUND OR UNDERSLAB CONDUIT
	BARE COPPER GROUND CONDUCTOR, SIZE AS SHOWN
	GROUND BAR
MH X	MANHOLE: X INDICATES TYPE AS FOLLOWS P = POWER MANHOLE T = TELECOMMUNICATIONS MANHOLE

FIRE ALARM SYMBOLS

NOTE: NOT ALL SYMBOLS MAY BE USED.

SYMBOL	DESCRIPTION
S	SMOKE DETECTOR
H	HEAT DETECTOR
F F	WALL / CEILING MOUNTED HORN/SPEAKER WITH STROBE
F F	WALL / CEILING MOUNTED FIRE ALARM STROBE
F F	WALL / CEILING MOUNTED HORN/SPEAKER
S S	WALL / CEILING MOUNTED FIRE ALARM SPEAKER
F	WALL MOUNTED FIRE ALARM CHIME WITH STROBE
F	WALL MOUNTED FIRE ALARM CHIME
F	WALL MOUNTED FIRE ALARM BELL
F	WALL MOUNTED MANUAL STATION
D	WALL MOUNTED MAGNETIC DOOR HOLDER
S	DUCT SMOKE DETECTOR
F.S.	FLOW SWITCH
T.S.	TAMPER SWITCH
D	DAMPER OPERATOR
FABP	FIRE ALARM BOOSTER POWER SUPPLY PANEL
FACP	FIRE ALARM CONTROL PANEL
FAAP	FIRE ALARM ANNUNCIATOR PANEL

DATA / SYSTEMS SYMBOLS

NOTE: NOT ALL SYMBOLS MAY BE USED.

SYMBOL	DESCRIPTION
	ROUGH-IN FOR DATA DEVICE MOUNTED AT 18" A.F.F., UNLESS NOTED OTHERWISE
	ROUGH-IN FOR PHONE MOUNTED AT 54" A.F.F., UNLESS NOTED OTHERWISE
	ROUGH-IN FOR PHONE/DATA DEVICE MOUNTED AT 18" A.F.F., UNLESS NOTED OTHERWISE
CR	ROUGH-IN FOR ACCESS CONTROL CREDENTIAL READER DEVICE MOUNTED AT 48" A.F.F., UNLESS NOTED OTHERWISE
DC	ROUGH-IN FOR ACCESS DOOR CONTACT
DS	ROUGH-IN FOR DOOR POSITION SWITCH
ES	ROUGH-IN FOR ELECTRIC STRIKE
IM	ROUGH-IN FOR INTERFACE MODULE
RX	ROUGH-IN FOR REQUEST TO EXIT DEVICE MOUNTED AT 48" A.F.F., UNLESS NOTED OTHERWISE
CCTV	ROUGH-IN FOR CCTV CAMERA DEVICE. COORDINATE MOUNTING HEIGHT WITH SYSTEM VENDOR PRIOR TO ROUGH-IN.

ELECTRICAL SHEET INDEX

SHEET NUMBER	Sheet Name
E001	ABBREVIATIONS, LEGENDS & GENERAL NOTES - ELECTRICAL
E090	GROUNDING AND LIGHTNING PROTECTION PLANS
E100	ELECTRICAL SITE PLAN
E101	POWER PLAN - LEVEL 1
E102	POWER PLAN - LEVEL 2
E201	LIGHTING PLAN - LEVEL 1
E202	LIGHTING PLAN - LEVEL 2
E203	PHOTOMETRIC CALCULATIONS
E501	ELECTRICAL DETAILS
E502	ELECTRICAL DETAILS
E503	ELECTRICAL DETAILS
E601	ELECTRICAL ONE-LINE DIAGRAM
E701	ELECTRICAL SCHEDULES
E702	ELECTRICAL PANEL SCHEDULES

WHERE NOT INDICATED ON THE PLANS, BRANCH CIRCUIT CONDUCTORS AND CONDUITS SHALL BE SIZED, AT MINIMUM, BASED ON THE SCHEDULE BELOW. BRANCH CIRCUIT LENGTH SHALL BE LIMITED TO 75'-0" WHERE POSSIBLE. THE WIRING FOR ANY BRANCH CIRCUIT EXCEEDING 75'-0" IN LENGTH SHALL BE UPSIZED TO MAINTAIN < 3% VOLTAGE DROP.

BRANCH CIRCUIT WIRING MINIMUM REQUIREMENTS

	WIRE SIZE (AWG)		CONDUIT SIZE	
OCPD SIZE	PHASE/NEUTRAL	GROUND	3W+GRD	4W+GRD
20A	#12	#12	3/4"	3/4"
30A	#10	#12	3/4"	3/4"
40A	#8	#10	3/4"	3/4"
55A	#6	#10	3/4"	1"
60A	#4	#10	1"	1-1/4"

ELECTRICAL GENERAL NOTES

1. THIS IS A STANDARD LEGEND SHEET. SOME SYMBOLS OR ABBREVIATIONS APPEAR ON THIS SHEET AND NOT ON PROJECT DRAWINGS.
2. UNLESS OTHERWISE INDICATED, MOUNTING ELEVATIONS ARE CENTERLINE ELEVATIONS.
3. CONDUIT HOMERUNS NOT OTHERWISE MARKED SHALL BE CONSIDERED 2#12 AND 1#12 GROUND IN 3/4" MIN. CONDUIT.
4. CIRCUITS ARE RATED FOR INDOOR OVERHEAD ROUTING. OBTAIN ENGINEER APPROVAL ON OPERATING FOR UNDERGROUND, TRAY, PLENUM AND ROOF-MOUNTED INSTALLATIONS. LIMIT VOLTAGE DROP TO 2% FOR FEEDERS AND 3% FOR BRANCH CIRCUITS.
5. CONTRACTOR SHALL NOT BE PERMITTED TO CONSOLIDATE INDIVIDUAL BRANCH CIRCUIT HOME RUNS EXCEPT AS FOLLOWS:
   A: WHEN SHOWN ON DRAWINGS
   B: WITH PRIOR WRITTEN APPROVAL BY THE ENGINEER
   C: ABOVE ACCESSIBLE CEILING NEAR PANEL.
   ALL 120V & 277V BRANCH CIRCUITS SHALL HAVE DEDICATED NEUTRAL CONDUCTORS. CONSOLIDATED HOMERUNS SHALL HAVE A MAXIMUM OF 3 SEPARATE PHASE CONDUCTORS.
6. WIRE AND CONDUIT SIZES AND QUANTITIES FOR FEEDERS AND BRANCH CIRCUITS WHICH ARE SHOWN ON ONE-LINE DIAGRAM APPLY TO PLAN SHEETS.
7. ALL WALL AND FLOOR PENETRATIONS FOR CONDUIT INSTALLATION SHALL BE PROPERLY SEALED AND FIRE STOPPED.
8. NEMA 1 UNLESS INDICATED OTHERWISE, 3R=NEMA 3R, 4X=NEMA 4X.
9. TRAVELERS FOR MULTIPLE LOCATION SWITCHING ARE NOT MARKED ON THE PLANS. CONTRACTOR SHALL PROVIDE QUANTITY OF CONDUCTORS REQUIRED FOR THE INDICATED SWITCHING.
10. CIRCUIT IDENTIFICATION SHALL BE AS FOLLOWS:
    A-2 INDICATES A CIRCUIT AT CIRCUIT 2 OF PANELBOARD A. REFER TO PANEL SCHEDULE FOR BREAKER INFORMATION.
    A-5,7 INDICATES A SINGLE PHASE, 2-POLE CIRCUIT AT CIRCUITS 5 & 7 OF PANELBOARD A. REFER TO PANEL SCHEDULE FOR BREAKER INFORMATION.
11. SERIES OR CASCADED RATINGS ARE NOT ALLOWED UNLESS SPECIFICALLY NOTED.
12. NO WIRING DEVICES OR OUTLET BOXES SHALL BE INSTALLED BACK-TO-BACK. CONTRACTOR SHALL CORRDINATE ALL RECEPTACLE MOUNTING HEIGHTS WITH APPROVED CASEWORK SHOP DRAWINGS PRIOR TO INSTALLATION OF AFFECTED RECEPTACLES.
13. WALL-MOUNTED EXIT SIGNS INDICATED ABOVE DOORS SHALL BE CENTERED BETWEEN THE TOP OF DOOR FRAME AND CEILING IF VERTICAL DISTANCE BETWEEN THE TWO IS 24 INCHES OR LESS; OTHERWISE, MOUNT BOTTOM OF EXIT SIGN 6 INCHES ABOVE TOP OF DOOR FRAME.
14. CONSTRUCTION DETAILS SHOWN ON DRAWINGS SHOW TYPICAL INSTALLATION UNLESS OTHERWISE NOTED AND APPLY TO ELECTRICAL WORK INCLUDED IN THIS PACKAGE EVEN THOUGH NOT SPECIFICALLY REFERENCED ON THE PLAN DRAWINGS.
15. COORDINATE LOCATIONS OF DEVICES WITH ARCHITECTURAL ELEVATIONS AND DETAILS. ARCHITECTURAL ELEVATIONS AND DETAILS TAKE PRECEDENCE OVER LOCATIONS SHOWN ON ELECTRICAL DRAWINGS.
16. DRAWINGS REPRESENT ELECTRICAL DESIGN INTENT. CONTRACTOR SHALL FURNISH, INSTALL AND SIZE ALL SLEEVES, HOLES, CORES, PATCHING, SLOTS, ANCHORS, BRACKETS, SUPPORTS, JUNCTION BOXES, PULL BOXES, AND OTHER APPURTENANCES NECESSARY TO EXECUTE THE CONTRACT DOCUMENTS COMPLETE. SOME OF THESE ITEMS MAY BE SHOWN ON THE DRAWINGS FOR CLARITY OR DESIGN PREFERENCE. HOWEVER, NOT ALL OF THE ITEMS, NECESSARY FOR COMPLETE EXECUTION AND INSTALLATION, ARE SHOWN.
17. ALL ELECTRICAL WORK SHALL BE INSTALLED IN STRICT COMPLIANCE WITH ALL APPLICABLE LOCAL, STATE, AND FEDERAL CODES, PARTICULARLY THE NATIONAL ELECTRICAL CODE (NEC) - NFPA 70.
18. THE WORD PROVIDE IS SYNONOMOUS WITH FURNISH AND INSTALL.
19. THE WORD DEMOLISH IS SYNONOMOUS WITH REMOVE AND DISPOSE.
20. CONSIDER SECTIONS OF CONDUIT RUNS NOT MARKED, AND NOT SHOWN ON THE ONE LINE DIAGRAMS, TO BE THE SAME AS THE HOME RUN OR THE LAST SECTION IN THE RUN THAT IS MARKED.
21. WHERE TWO SWITCHES ARE SHOWN TO BE CONNECTED TO THE SAME LIGHT FIXTURE, WIRE THE FIXTURES TO PROVIDE MULTI-LEVEL LIGHTING, ONE SWITCH CONTROLLING THE INBOARD LAMPS AND THE OTHER CONTROLLING THE OUTBOARD LAMPS.
22. PROVIDE A 4" THICK CONCRETE PAD UNDER ALL FLOOR MOUNTED ELECTRICAL DISTRIBUTION EQUIPMENT AND CONTROL PANELS.
23. CONDUIT RUNS WHERE SHOWN, ARE DIAGRAMMATIC ONLY. INSTALL AS REQUIRED TO AVOID CONFLICTS WITH EQUIPMENT OR STRUCTURAL CONDITIONS.
24. ONLY MAJOR PULL BOXES ARE SHOWN. PROVIDE ADDITIONAL PULL BOXES AS REQUIRED TO MEET CODE REQUIREMENTS AND TO PROVIDE A WORKABLE INSTALLATION.
25. VERIFY THE LOCATION OF CONDUIT ENTRANCES FOR ALL EQUIPMENT USING THE APPROVED SHOP DRAWINGS PRIOR TO INSTALLING CONDUITS AND BOXES TO SERVE THE EQUIPMENT. CONDUIT STUB-UPS SHALL NOT BE MORE THAN 6" FROM THE CENTERLINE OF EQUIPMENT CONDUIT ENTRANCE.
26. THE CONTROL DIAGRAMS AND THE QUANTITY AND SIZE OF WIRE/CONDUIT REPRESENT A SUGGESTED ARRANGEMENT BASED UPON SELECTED ELECTRICAL EQUIPMENT. MODIFICATIONS ACCEPTABLE TO THE OWNER MAY BE MADE TO ACCOMMODATE EQUIPMENT ACTUALLY PURCHASED. MAINTAIN THE BASIC SEQUENCE AND METHOD OF CONTROL INDICATED ON THE DRAWINGS AND SPECIFICATIONS.
27. PROVIDE SUITABLE BARRIERS IN MANHOLES, HANDHOLES, PULL BOXES, AND JUNCTION BOXES TO SEPARATE INSTRUMENTATION AND COMMUNICATION CABLES FROM OTHER WIRING WHERE SEPARATE BOXES ARE NOT SHOWN ON THE DRAWINGS.

AECOM

PROJECT

NEW SECURITY FORCES BUILDING

PAYNE BLVD.
CHARLOTTE, NORTH CAROLINA 28208

CLIENT

NORTH CAROLINA AIR NATIONAL GUARD - 145TH AIRLIFT WING

145TH AIRLIFT WING
4930 MINUTEMAN WAY
CHARLOTTE, NORTH CAROLINA 28208

ARCHITECT/DESIGNER

AECOM

277 W NATIONWIDE BLVD
COLUMBUS, OH 43215
614-464-4500

CONSULTANTS

REGISTRATION

NORTH CAROLINA PROFESSIONAL SEAL 034073 ENGINEER BRIAN A. WALKER
10/14/2025

KEY PLAN

ISSUE/REVISION

I/R	DATE	DESCRIPTION
1	6-19-2025	B-3 SUBMITTAL - FINAL REV1
	11/30/16	B-3 SUBMITTAL - FINAL

PROJECT NUMBER

60637899

SHEET TITLE

ABBREVIATIONS, LEGENDS & GENERAL NOTES - ELECTRICAL

SHEET NUMBER

E001

©2016 AECOM Corporation

15_ 15.00_ ELECTRICAL_ E001

15-ELECTRICAL-15.00-E001-ABBREVIATIONS, LEGENDS & GENERAL NOTES - ELECTRICAL
Project Management Initials: Designer: Designer Checked: Checker Approved: Approver ARCH E1 30"x42"

Last Plotted: 10/14/2025 12:41:19 PM
Filename: BIM 360://BP-04ME7K (USA)\60637899-SFNCANG145WGB3788_SF-NC_ANG_R21_E.rvt

Printed on ___% Post-Consumer Recycled Content Paper

15-ELECTRICAL-15.00-E090-GROUNDING AND LIGHTNING PROTECTION PLANS
Project Management Initials: Designer: Designer Checker: Checker Approved: Approver ARCH E1 30"x42"

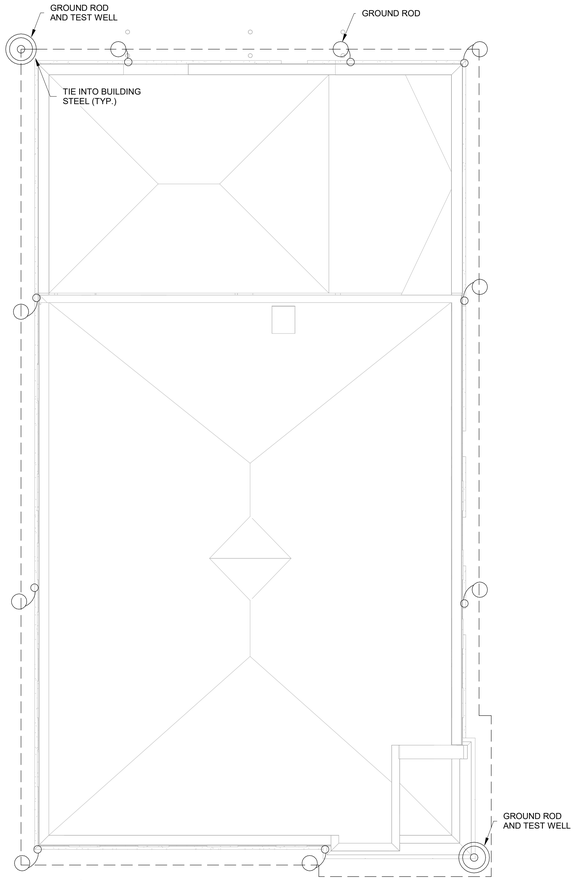

2 **GROUNDING PLAN**
E090 Scale: 1/8" = 1'-0"

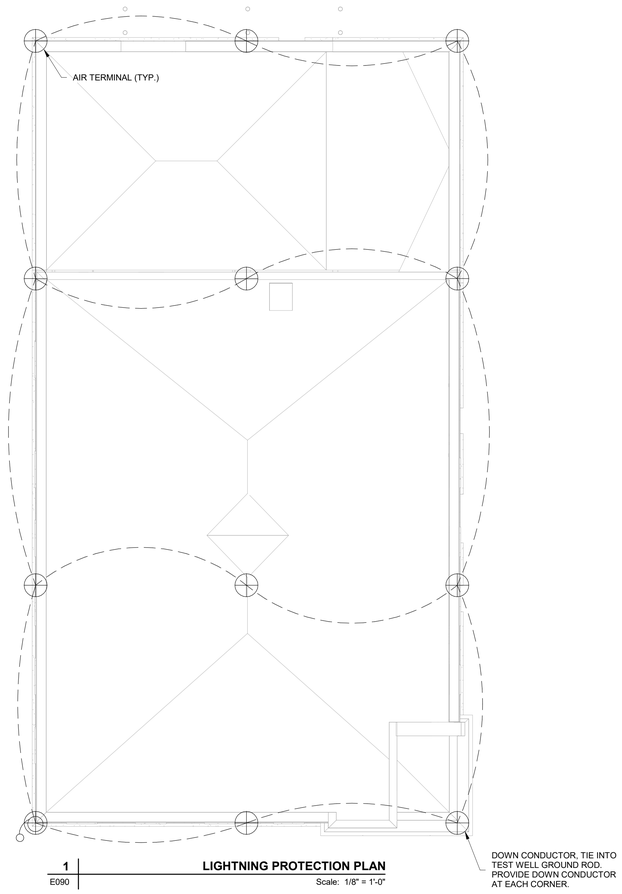

1 **LIGHTNING PROTECTION PLAN**
E090 Scale: 1/8" = 1'-0"

LIGHTNING PROTECTION GENERAL NOTES

A. PROVIDE U.L. MASTER LABEL LIGHTING PROTECTION SYSTEM.

B. PROVIDE AIR TERMINALS FOR ALL ROOFTOP HVAC EQUIPMENT. TIE INTO LIGHTNING PROTECTION SYSTEM.

C. LOCATE AIR TERMINAL AS SHOWN. ENSURE THAT ALL POINTS ARE LOCATED WITHIN 2'-0" OF OUTSIDE BUILDING EDGE, OUTSIDE CORNERS AND RIDGE ENDS.

D. ENSURE THAT AIR TERMINALS PLACED ON RIDGES OF ROOF AND AROUND PERIMETER DO NOT EXCEED 20'-0" INTERVALS.

E. THE TIP OF AN AIR TERMINAL SHALL NOT BE LESS THAN 10" ABOVE THE OBJECT OR AREA IT IS TO PROTECT.

F. MAINTAIN HORIZONTAL OR DOWNWARD COURSING OF MAIN CONDUCTOR AND ENSURE THAT NO BEND OF A CONDUCTOR SHALL FORM AN INCLUDED ANGLE OF LESS THAN 90 DEGREES, NOR SHALL IT HAVE A RADIUS BEND LESS THAN 8".

G. CONDUCTORS SHALL BE FASTENED TO THE STRUCTURE AT INTERVALS NOT EXCEEDING 3'-0".

H. EACH DOWN CONDUCTOR SHALL TERMINATE AT A GROUNDING ELECTRODE DEDICATED TO THE LIGHTING PROTECTION SYSTEM. PROVIDE ADDITIONAL GROUND RODS AS REQUIRED TO FACILITATE CONNECTION OF THE DOWN CONDUCTORS. ROUTE DOWN CONDUCTORS WITHIN THE BUILDING. IF CONCEALED, ALL DOWN CONDUCTORS MUST BE INSPECTED PRIOR TO BEING CONCEALED.

I. THIS PLAN IS CONCEPTUAL ONLY AND WILL BE MODIFIED DURING THE DESIGN AND SUBMITTAL PROCESS FOR THIS SYSTEM. LIGHTNING PROTECTION SYSTEM SHALL BE UL MASTER LABELED.

J. THE LIGHTNING PROTECTION SYSTEM SHALL BE INSTALLED TO MEET ALL REQUIREMENTS OF 2020 NFPA 780.

K. LIGHTNING PROTECTION SYSTEM (LPS) SHALL BE INSTALLED PER UFC 3-575-01, AFMAN 32-1065 AND NFPA 780, ALL LATEST EDITIONS. THE FACILITY SHALL BE TESTED, CERTIFIED, AND ACCEPTED BY THE THIRD-PARTY REQUIREMENTS OF UFC 3-575-01, SECTION 3-1 AND AFMAN 32-1065 SECTION 6.1. THE ADDITIONAL RESPONSIBILITY OF THIRD-PARTY TESTING WILL BE TO TEST ALL AIR TERMINALS AND ROOF MOUNTED LPS BONDED ELECTRICAL, MECHANICAL, AND STEEL ROOF PENETRATIONS. THIS TESTING SHALL BE ADMINISTERED TO THE ENTIRE FACILITY FOR NEW OR ALTERED LPS.

GROUNDING GENERAL NOTES

A. REFER TO SPECIFICATION SECTION 26 05 26 FOR GROUND RODS, TEST WELL, AND GROUND CONDUCTOR REQUIREMENTS.

B. ALL GROUND CONNECTIONS SHALL BE MADE WITH EXOTHERMIC WELD, UNO.

C. PROVIDE 4/0 COPPER GROUND CONDUCTOR FOR SERVICE GROUNDING AND GROUND LOOP.

AECOM

PROJECT

NEW SECURITY FORCES BUILDING

PAYNE BLVD.
CHARLOTTE, NORTH CAROLINA 28208

CLIENT

NORTH CAROLINA AIR NATIONAL GUARD - 145TH AIRLIFT WING

145TH AIRLIFT WING
4930 MINUTEMAN WAY
CHARLOTTE, NORTH CAROLINA 28208

ARCHITECT/DESIGNER

AECOM

277 W NATIONWIDE BLVD
COLUMBUS, OH 43215
614-464-4500

CONSULTANTS

REGISTRATION

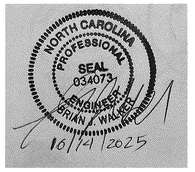

KEY PLAN

N

ISSUE/REVISION

I/R	DATE	DESCRIPTION
1	6-19-2025	B-3 SUBMITTAL - FINAL REV1
	03/08/24	B-3 SUBMITTAL - FINAL

PROJECT NUMBER

60637899

SHEET TITLE

GROUNDING AND LIGHTNING PROTECTION PLANS

SHEET NUMBER

E090

Last Plotted: 10/14/2025 12:47:20 PM
Filename: BIM 360/ISP-NAED1 (USA) 60637899-SFNCANG145thSQ37899_SF-NC_ANG_R21_E.rvt
Printed on ___% Post-Consumer Recycled Content Paper
©2016 AECOM Corporation
15_ 15.00_ ELECTRICAL_ E090

15-ELECTRICAL-15.10-E100-ELECTRICAL SITE PLAN
Project Management Initials: Designer: Designer Checked: Checker Approved: Approver/ARCH E1 30"x42"

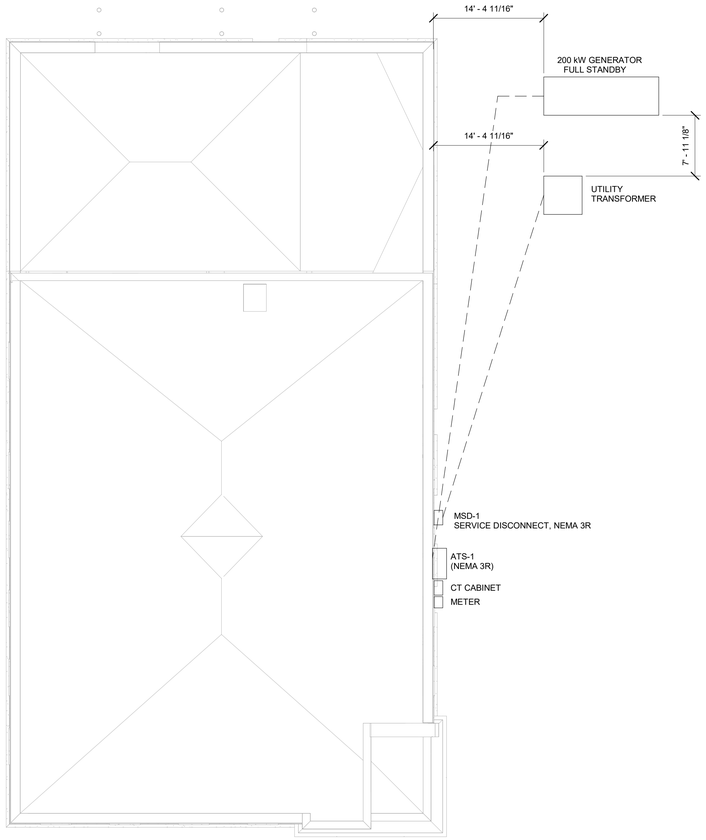

1 E100 **ELECTRICAL SITE PLAN**
Scale: 1/8" = 1'-0"

Last Plotted: 10/14/2025 12:47:21 PM
Filename: BIM 360://SPACER (USA) 60637899-SFNCANG145th60637899_SF-NC_ANG_R21_E.rvt

Printed on ___ % Post-Consumer Recycled Content Paper

AECOM

PROJECT

NEW SECURITY FORCES BUILDING

PAYNE BLVD.
CHARLOTTE, NORTH CAROLINA 28208

CLIENT

NORTH CAROLINA AIR NATIONAL GUARD - 145TH AIRLIFT WING

145TH AIRLIFT WING
4930 MINUTEMAN WAY
CHARLOTTE, NORTH CAROLINA 28208

ARCHITECT/DESIGNER

AECOM

277 W NATIONWIDE BLVD
COLUMBUS, OH 43215
614-464-4500

CONSULTANTS

REGISTRATION

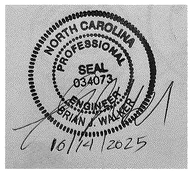

KEY PLAN

ISSUE/REVISION

I/R	DATE	DESCRIPTION
1	6-19-2025	B-3 SUBMITTAL - FINAL REV1
	09/06/23	B-3 SUBMITTAL - FINAL

PROJECT NUMBER

60637899

SHEET TITLE

ELECTRICAL SITE PLAN

SHEET NUMBER

E100

©2016 AECOM Corporation
15_ 15.10_ ELECTRICAL_ E100

15-ELECTRICAL-15.10-E101-POWER PLAN - LEVEL 1
Project Management Initials: Designer: Designer Checked: Checker Approved: Approver/ARCH E1 30"x42"

GENERAL NOTES

A. PROVIDE DISCONNECTING MEANS TO EQUIPMENT WHERE INDICATED. SIZE DISCONNECTS PER MANUFACTURER'S RECOMMENDATIONS. REFER TO SHEET E701 FOR MORE INFORMATION ON DISCONNECTING MEANS FOR EACH PIECE OF EQUIPMENT.

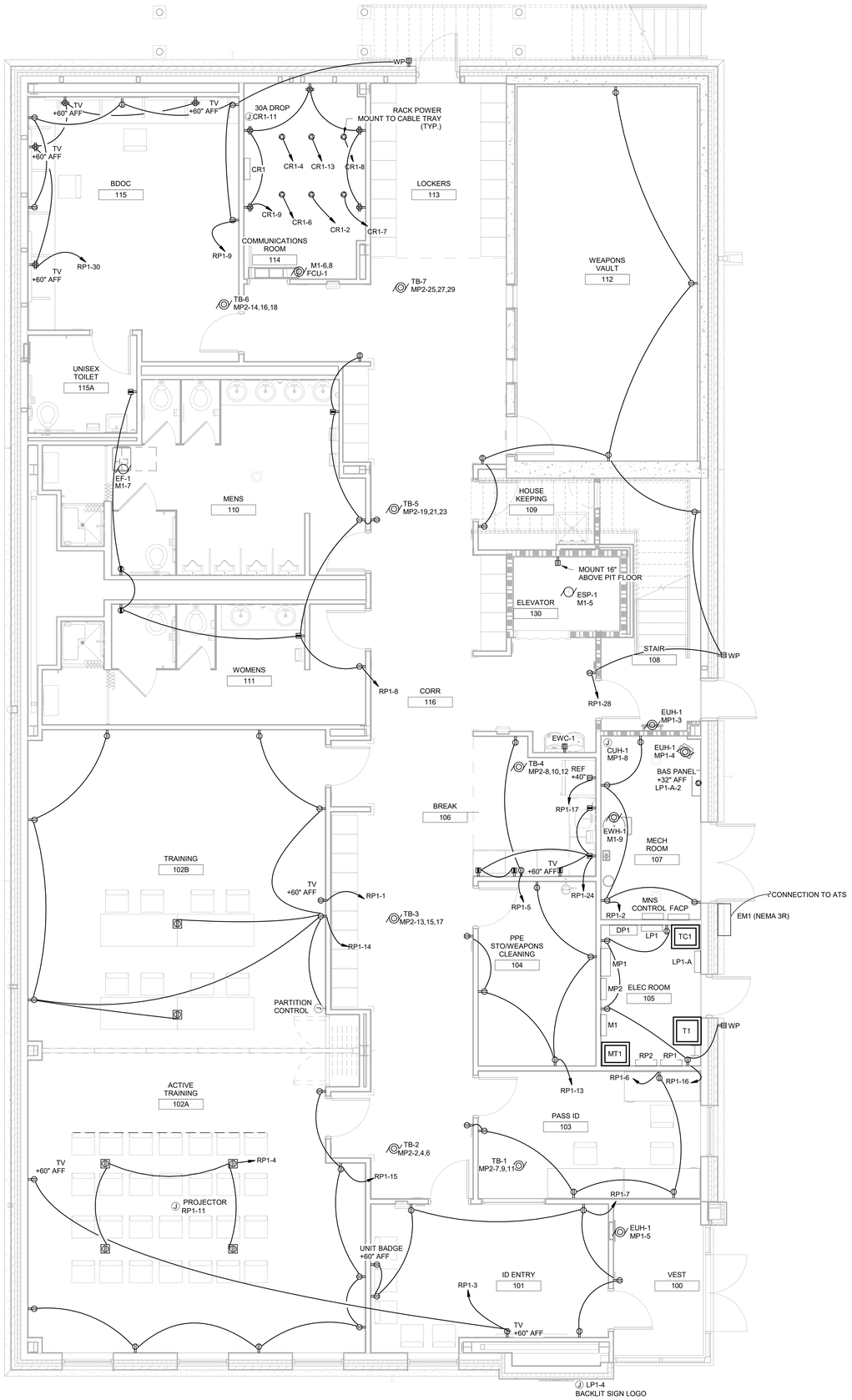

1
E101

FIRST FLOOR POWER PLAN
Scale: 1/4" = 1'-0"

AECOM

PROJECT

NEW SECURITY FORCES BUILDING

PAYNE BLVD.
CHARLOTTE, NORTH CAROLINA 28208

CLIENT

NORTH CAROLINA AIR NATIONAL GUARD - 145TH AIRLIFT WING

145TH AIRLIFT WING
4930 MINUTEMAN WAY
CHARLOTTE, NORTH CAROLINA 28208

ARCHITECT/DESIGNER

AECOM

277 W NATIONWIDE BLVD
COLUMBUS, OH 43215
614-464-4500

CONSULTANTS

REGISTRATION

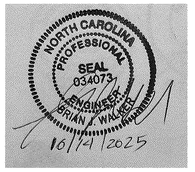

KEY PLAN

ISSUE/REVISION

I/R	DATE	DESCRIPTION
1	6-19-2025	B-3 SUBMITTAL - FINAL REV1
	09/06/23	B-3 SUBMITTAL - FINAL

PROJECT NUMBER

60637899

SHEET TITLE

POWER PLAN - LEVEL 1

SHEET NUMBER

E101

Last Plotted: 10/14/2025 12:47:23 PM
Filename: BIM 360://BP-NABER (USA) 60637899-SFWCANG145/60637899_SF-NC_ANG_B21_E.rvt

Printed on ___% Post-Consumer Recycled Content Paper

©2016 AECOM Corporation
15_ 15.10_ ELECTRICAL_ E101

15-ELECTRICAL-15.10-E102-POWER PLAN - LEVEL 2
Project Management Initials: Designer: Designer Checker: Checker Approved: Approver/ARCH E1 30"x42"

GENERAL NOTES

A. PROVIDE DISCONNECTING MEANS TO EQUIPMENT WHERE INDICATED. SIZE DISCONNECTS PER MANUFACTURER'S RECOMMENDATIONS.

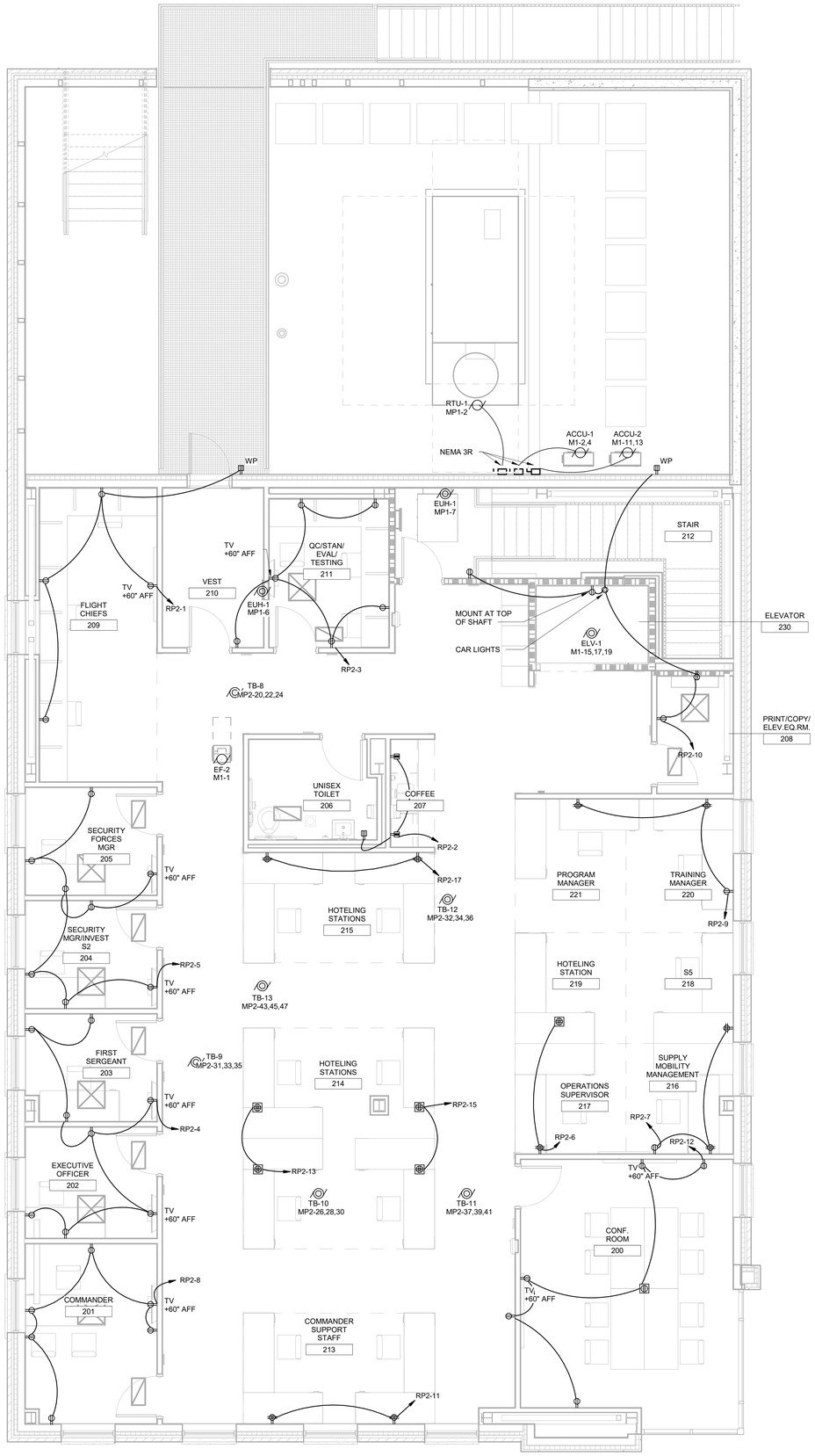

1
E102

SECOND FLOOR POWER PLAN

Scale: 1/4" = 1'-0"

AECOM

PROJECT

NEW SECURITY FORCES BUILDING

PAYNE BLVD.
CHARLOTTE, NORTH CAROLINA 28208

CLIENT

NORTH CAROLINA AIR NATIONAL GUARD - 145TH AIRLIFT WING

145TH AIRLIFT WING
4930 MINUTEMAN WAY
CHARLOTTE, NORTH CAROLINA 28208

ARCHITECT/DESIGNER

AECOM

277 W NATIONWIDE BLVD
COLUMBUS, OH 43215
614-464-4500

CONSULTANTS

REGISTRATION

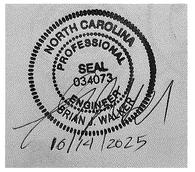

KEY PLAN

N

ISSUE/REVISION

I/R	DATE	DESCRIPTION
1	6-19-2025	B-3 SUBMITTAL - FINAL REV1
	09/06/23	B-3 SUBMITTAL - FINAL

PROJECT NUMBER

60637899

SHEET TITLE

POWER PLAN - LEVEL 2

SHEET NUMBER

E102

Last Plotted: 10/14/2025 12:47:25 PM
Filename: BM-300-ISP-AABER (SOAX) 60637899-SFNCANGFL45f60637899_SF-NC_ANG_R21_E.rvt

Printed on ___ % Post-Consumer Recycled Content Paper

©2016 AECOM Corporation
15_ 15.10_ ELECTRICAL_ E102

15-ELECTRICAL-15.20-E201-LIGHTING PLAN - LEVEL 1
Project Management Initials: Designer: Designer Checker: Checker Approved: Approver/ARCH E1 30"x42"

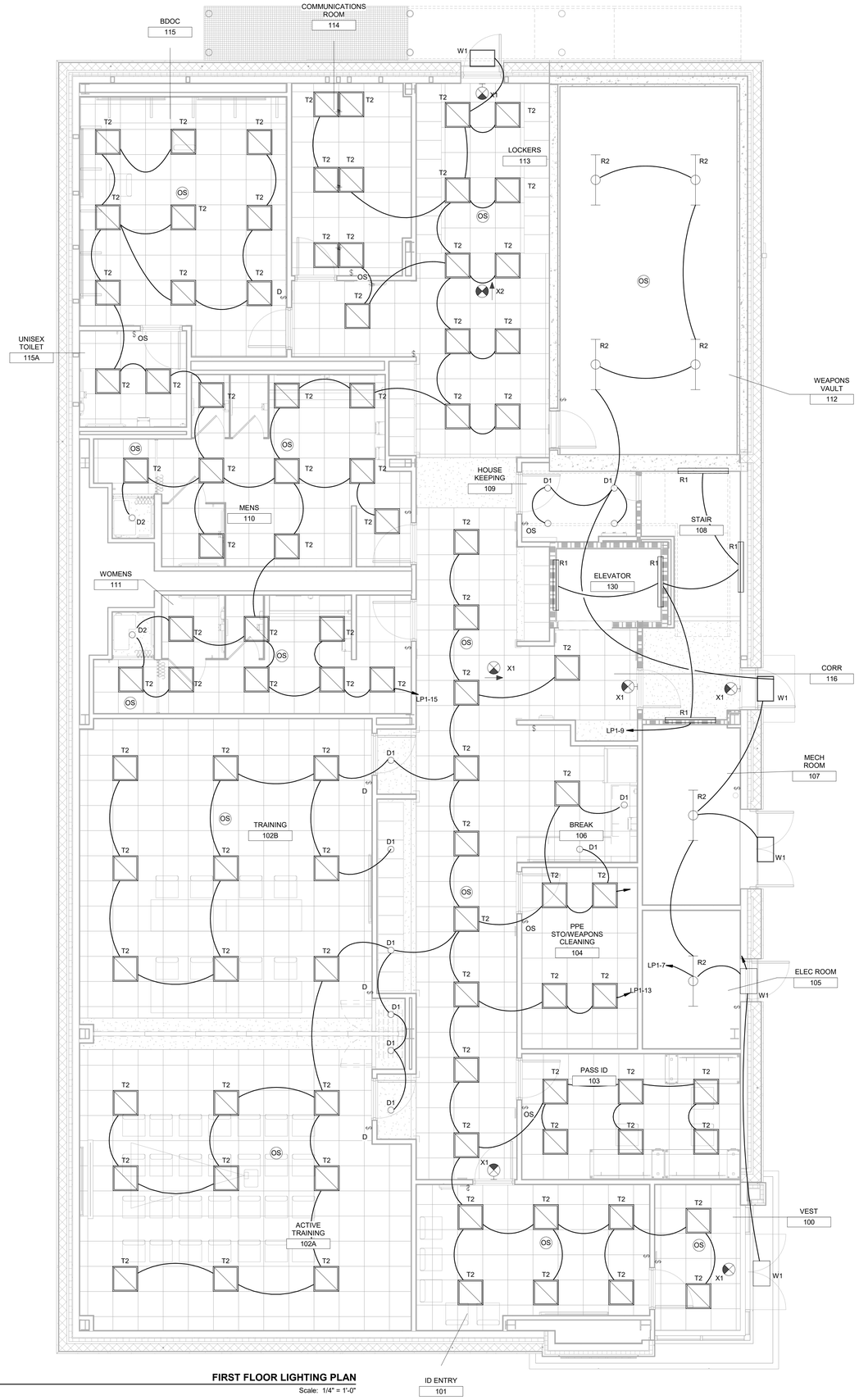

1
E201

FIRST FLOOR LIGHTING PLAN
Scale: 1/4" = 1'-0"

Last Plotted: 10/14/2025 12:47:39 PM
Filename: BM.360.ISP-AMER (USA) 60637899.SFNCANG145th63rf399_SFNC_ANG_R21_E.rvt

Printed on ____% Post-Consumer Recycled Content Paper

AECOM

PROJECT

NEW SECURITY FORCES BUILDING

PAYNE BLVD.
CHARLOTTE, NORTH CAROLINA 28208

CLIENT

NORTH CAROLINA AIR NATIONAL GUARD - 145TH AIRLIFT WING

145TH AIRLIFT WING
4930 MINUTEMAN WAY
CHARLOTTE, NORTH CAROLINA 28208

ARCHITECT/DESIGNER

AECOM

277 W NATIONWIDE BLVD
COLUMBUS, OH 43215
614-464-4500

CONSULTANTS

REGISTRATION

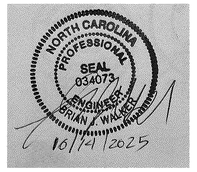

KEY PLAN

N

ISSUE/REVISION

I/R	DATE	DESCRIPTION
1	6-19-2025	B-3 SUBMITTAL - FINAL REV1
	09/06/23	B-3 SUBMITTAL - FINAL

PROJECT NUMBER

60637899

SHEET TITLE

LIGHTING PLAN - LEVEL 1

SHEET NUMBER

E201

©2016 AECOM Corporation
15_ 15.20_ ELECTRICAL_ E201

15-ELECTRICAL-15.20-E202-LIGHTING PLAN - LEVEL 2
Project Management Initials: Designer: Designer Checker: Checker Approved: Approver/ARCH E1 30"x42"

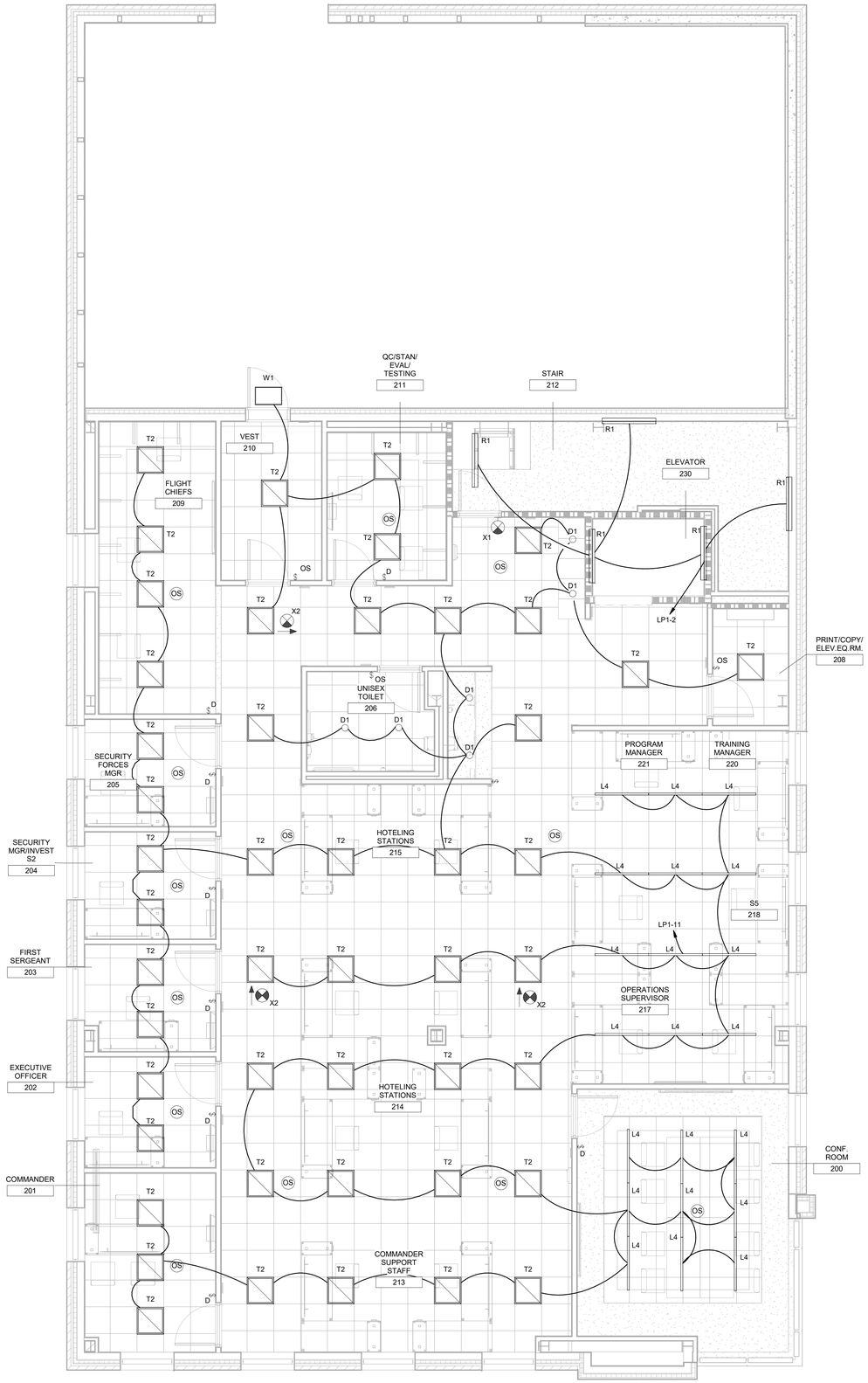

1 E202 **SECOND FLOOR LIGHTING PLAN**

Scale: 1/4" = 1'-0"

Last Plotted: 10/14/2025 12:47:28 PM
Filename: Bldg 5800 (SP-NABER (USA) 60637899_SFNCANG145th60637899_SF-NC_ANG_R21_E.rvt

Printed on ___ % Post-Consumer Recycled Content Paper

AECOM

PROJECT

NEW SECURITY FORCES BUILDING

PAYNE BLVD.
CHARLOTTE, NORTH CAROLINA 28208

CLIENT

NORTH CAROLINA AIR NATIONAL GUARD - 145TH AIRLIFT WING

145TH AIRLIFT WING
4930 MINUTEMAN WAY
CHARLOTTE, NORTH CAROLINA 28208

ARCHITECT/DESIGNER

AECOM

277 W NATIONWIDE BLVD
COLUMBUS, OH 43215
614-464-4500

CONSULTANTS

REGISTRATION

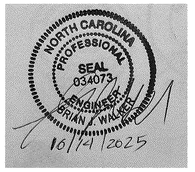

KEY PLAN

N

ISSUE/REVISION

I/R	DATE	DESCRIPTION
1	6-19-2025	B-3 SUBMITTAL - FINAL REV1
	09/06/23	B-3 SUBMITTAL - FINAL

PROJECT NUMBER

60637899

SHEET TITLE

LIGHTING PLAN - LEVEL 2

SHEET NUMBER

E202

©2016 AECOM Corporation

15_ 15.20_ ELECTRICAL_ E202

15-ELECTRICAL-15.20-E203-PHOTOMETRIC CALCULATIONS
Project Management Initials: Designer: Designer Checked: Checker Approved: Approver#RCH E1 30"x42"

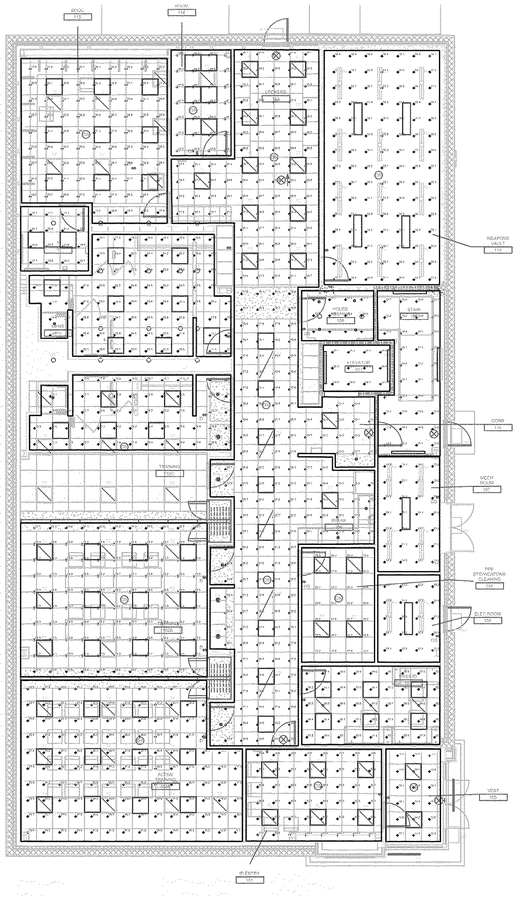

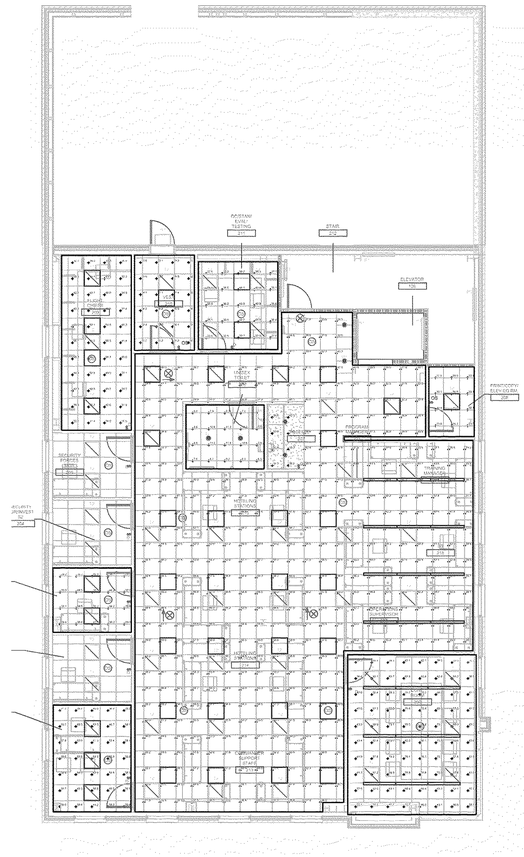

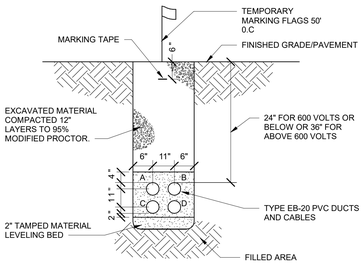

2 | 4-WAY CONCRETE ENCASED DUCTBANK
E501 | NTS

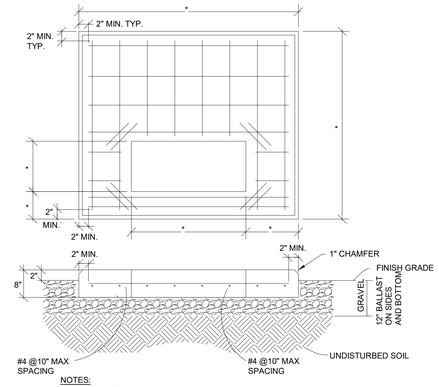

NOTES:
1. MIN. SLAB THICKNESS SHALL BE 8".
2. REINFORCE WITH #4 REBAR, 4" FROM BOT. OF SLAB, WITH 2" MIN. CLEARANCE FROM EDGE OF PAD.
3. REBAR REINFOREMENT LOCATIONS TYPICAL OF PAD REQUIREMENT AS SHOWN.
4. 12" DEEP COMPACTED SAND OR GRAVEL BED MINIMUM.
5. CHAMFER ALL EDGES.
6. VERIFY CORRECT DIMENSIONS AND COORDINATE WITH UTILITY FOR UTILITY PROVIDED TRANSFORMER.
7. HAND COMPACT GRAVEL BED.
8. PRECAST NON-METALIC PAD BASE MAY BE SUBSTITUTED IN-LIEU OF CAST-IN-PLACE PADS - SUBJECT TO ARCHITECTS APPROVAL.
9. EXTEND PAD 4" BEYOND ENCLOSURE AND COOLING FIN OF TRANSFORMER.

3 | TRANSFORMER PAD PLAN (TYP.)
E501 | NTS

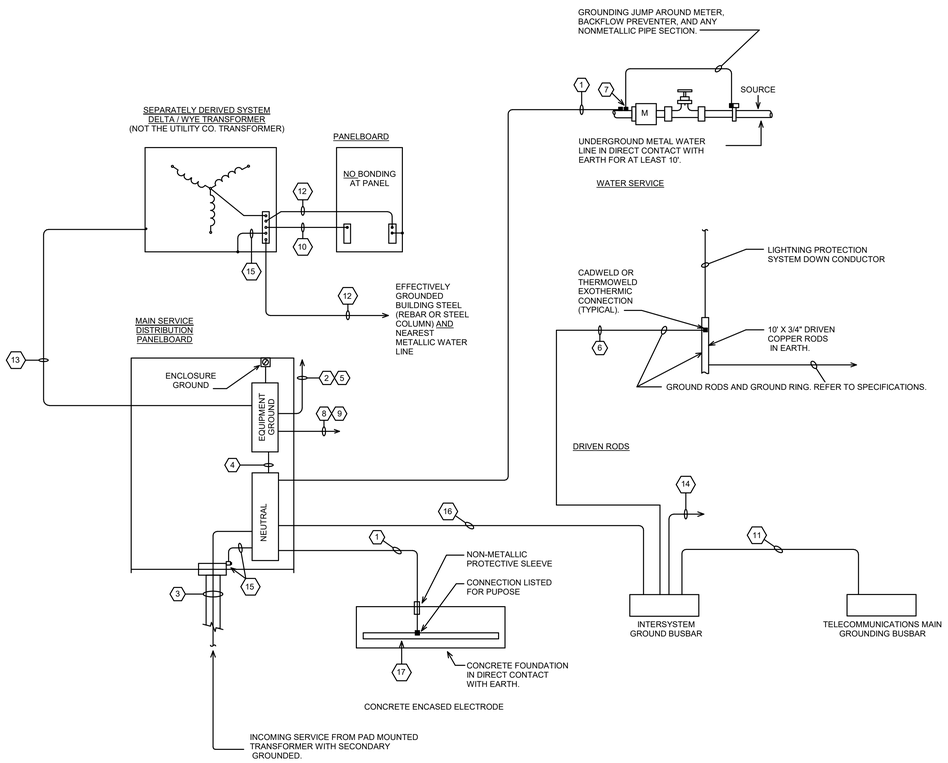

SERVICE GROUNDING ELECTRODE SYSTEM NOTES: ⬡

1. THE GROUNDING ELECTRODE CONDUCTORS SHALL BE 3/0 AWG. THE CONDUCTOR SHALL BE CONNECTED TO AN APPROVED GROUNDING ELECTRODE.
2. GROUND CONDUCTORS TO OTHER POINTS AND EQUIPMENT, AS REQUIRED BY NEC ARTICLE 250 AND ELECTRICAL SERVICE AND POWER DISTRIBUTION SPECIFICATIONS.
3. SERVICE ENTRANCE PHASE CONDUCTORS (UNGROUNDED) WITH GROUNDED (SERVICE) CONDUCTOR.
4. MAIN BONDING JUMPER SHALL BE 3/0 AWG.
5. EQUIPMENT GROUND CONDUCTOR SIZED PER TABLE 250.122 OF THE NEC.
6. GROUND ROD ELECTRODE PROVIDE 1/0 AWG. COPPER GROUNDING ELECTRODE CONDUCTOR.
7. CONNECTION SHALL BE MADE WITH 5' OF BUILDING ENTRANCE PER NEC 250.52(A)(1).
8. METAL WATER PIPING AND STRUCTURAL STEEL NOT INTENTIONALLY GROUNDED SHALL BE BONDED PER NEC 250.104(A) AND NEC TABLE 250.66.
9. OTHER METAL PIPING (GAS,ECT.) SHALL BE BONDED PER NEC 250.104(B) AND NEC TABLE 250.122.
10. ELECTRODE GROUND CONDUCTOR FOR SEPARATELY DERIVED SYSTEM. SIZE PER NEC TABLE 250.66.
11. GROUND CONDUCTOR TO TELECOMMUNICATIONS MAIN GROUNDING BUSBAR SIZED PER TELECOMMUNICATION AND SPECIFICATION REQUIREMENTS.
12. SYSTEM BONDING JUMPER FOR SEPARATELY DERIVED SYSTEMS SHALL BE SIZED PER NEC 250.30(A)(1).
13. EQUIPMENT GROUND CONDUCTOR FOR SEPERATELY DERIVED SYSTEM. SIZE PER NEC TABLE 250.122.
14. INTERSYSTEM GROUND CONDUCTORS PER NEC 250.94 FOR RADIO, TV, CABLE TV, ETC. GROUND CONDUCTORS SHALL BE #6 AWG.
15. SUPPLY SIDE EQUIPMENT BONDING JUMPER PER NEC 250.92(A). THE NON-CURRENT CARRYING METALLIC PARTS OF SERVICE RACEWAYS SHALL BE BONDED. BONDING METHODS SHALL BE IN ACCORDANCE TO NEC 250.92(B).
16. PROVIDE INTERSYSTEM BONDING & ELECTRODE CONDUCTOR PER NEC 250.94. GROUND CONDUCTOR SHALL BE #1/0 AWG.
17. CONCRETE ENCASED ELECTRODE AS DESIGNATED IN THE NEC 250.52(A)(3) SHALL BE CONSIDERED A GROUNDING ELECTRODE AND SHALL BE BONDED TOGETHER WITH THE OTHER GROUNDING ELECTRODES TO CREATE A GROUNDING ELECTRODE SYSTEM. GROUND MINIMUM 20' OF STEEL.

1 | SERVICE GROUNDING ELECTRODE SYSTEM WIRING DIAGRAM DETAIL
E501 | NTS

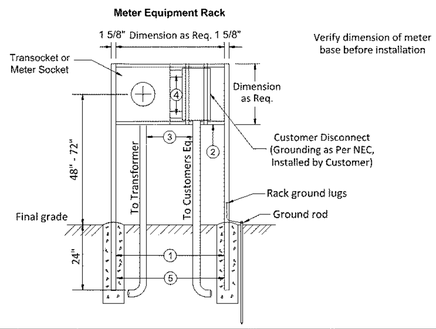

Item	Qty	Description
1	2	Strut Channel (1 5/8" x 1 5/8" x 8'), galvanized
2	2	Strut Channel (1 5/8" x 1 5/8" x 1/8" x 36"), galvanized
3	2	Conduit, Schedule 80 PVC, as required
4	1	Conduit, nipple, as required (lowered for meter socket - upper for transocket)
5		Concrete, as required

Notes:
1. Company owned service lateral conductors are installed by Company and line-side (top) connections made up by Company. Customer service conductors are installed and connected in socket by Customer.
2. Meter socket, rack and conduit/risers provided, installed and maintained by Customer. A 4 inch minimum clearance from the disconnect switch operating-lever is required. See Table 5-C, pages 58-61 for list of approved meter sockets.
3. Service lateral or source conductors provided and installed as per 400.02, page 34. The service raceway to transformer (source) may not contain any condulet or other open connections.
4. A 4 feet clearance is required from meter side of meter rack assembly to any obstruction or structure.
5. Customer service equipment may be installed on the meter rack assembly in accordance with all applicable codes. In unincorporated areas, contact company representative for details.
6. Customer provides, installs and maintains the ground rod conductor, #6 Copper minimum and connection to a ground rod. Company reserves the right to refuse installation of service contingent upon observing an unsafe Customer connection.
7. Alternate Design- Customer shall obtain Company approval of any alternate design prior to installation. A Meter Pedestal is an acceptable alternate design. Contact Company Representative for details.

Copyright 2025 Oncor Electric Delivery Company. All rights reserved. *Page 41*

4 | ONCOR METER SOCKET DETAIL (FROM ONCOR'S "ELECTRICAL SERVICE GUIDELINES BOOK"
E501 | Scale: 12" = 1'-0"

AECOM

PROJECT

NEW SECURITY FORCES BUILDING

PAYNE BLVD.
CHARLOTTE, NORTH CAROLINA 28208

CLIENT

NORTH CAROLINA AIR NATIONAL GUARD - 145TH AIRLIFT WING

145TH AIRLIFT WING
4930 MINUTEMAN WAY
CHARLOTTE, NORTH CAROLINA 28208

ARCHITECT/DESIGNER

AECOM

277 W NATIONWIDE BLVD
COLUMBUS, OH 43215
614-464-4500

CONSULTANTS

REGISTRATION

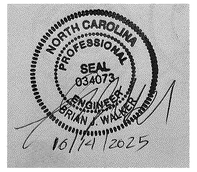

KEY PLAN

N

ISSUE/REVISION

I/R	DATE	DESCRIPTION
1	6-19-2025	B-3 SUBMITTAL - FINAL REV1
	09/06/23	B-3 SUBMITTAL - FINAL

PROJECT NUMBER

60637899

SHEET TITLE

ELECTRICAL DETAILS

SHEET NUMBER

E501

Printed on ___% Post-Consumer Recycled Content Paper

©2016 AECOM Corporation

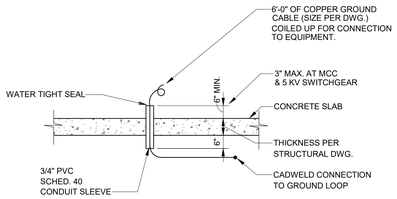

1 EQUIPMENT GROUND CABLE STUB-UP
E502 NTS

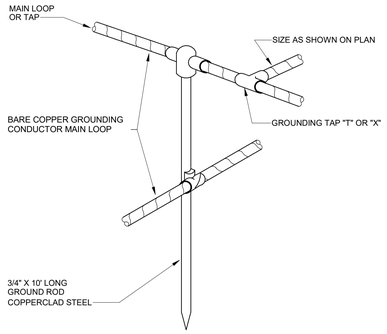

2 CONDUCTOR TO GROUND ROD CONNECTION DETAIL
E502 NTS

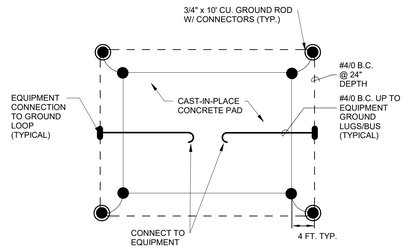

NOTE:

1. FOR GENERATOR AND SWBD-GEN1 GROUNDING.

3 EQUIPMENT GROUNDING PLAN
E502 NTS

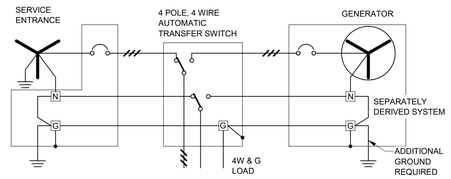

4 SERVICE ENTRANCE GROUNDING DETAIL
E502 NTS

AECOM

PROJECT

NEW SECURITY FORCES BUILDING

PAYNE BLVD.
CHARLOTTE, NORTH CAROLINA 28208

CLIENT

NORTH CAROLINA AIR NATIONAL GUARD - 145TH AIRLIFT WING

145TH AIRLIFT WING
4930 MINUTEMAN WAY
CHARLOTTE, NORTH CAROLINA 28208

ARCHITECT/DESIGNER

AECOM

277 W NATIONWIDE BLVD
COLUMBUS, OH 43215
614-464-4500

CONSULTANTS

REGISTRATION

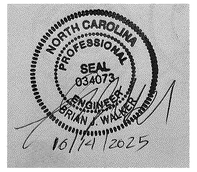

KEY PLAN

N

ISSUE/REVISION

I/R	DATE	DESCRIPTION
1	6-19-2025	B-3 SUBMITTAL - FINAL REV1
	03/08/24	B-3 SUBMITTAL - FINAL

PROJECT NUMBER

60637899

SHEET TITLE

ELECTRICAL DETAILS

SHEET NUMBER

E502

15-ELECTRICAL-15.50-E502-ELECTRICAL DETAILS
Designer: Designer Checker: Checker Approved: Approver/ARCH E1 30"x42"
Project Management Initials:

Last Plotted: 10/14/2025 12:47:30 PM
Filename: BM-300-ISP-AABER (USA) 60637899-SFNCANG145th60637899_SF-NC_ANG_R21_E-r4

Printed on ___ % Post-Consumer Recycled Content Paper

©2016 AECOM Corporation

15-ELECTRICAL-15.50-E503-ELECTRICAL DETAILS
Project Management Initials: Designer: Designer Checked: Checker Approved: Approver/ARCH E1 30"x42"

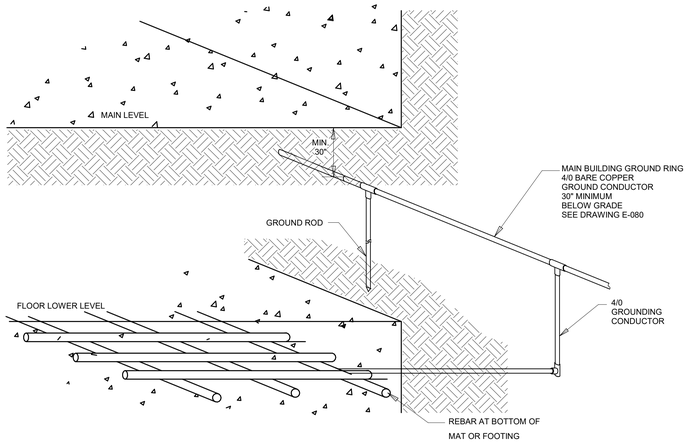

1 E503 **GROUND RING CONNECTION DETAIL**
Scale: NTS

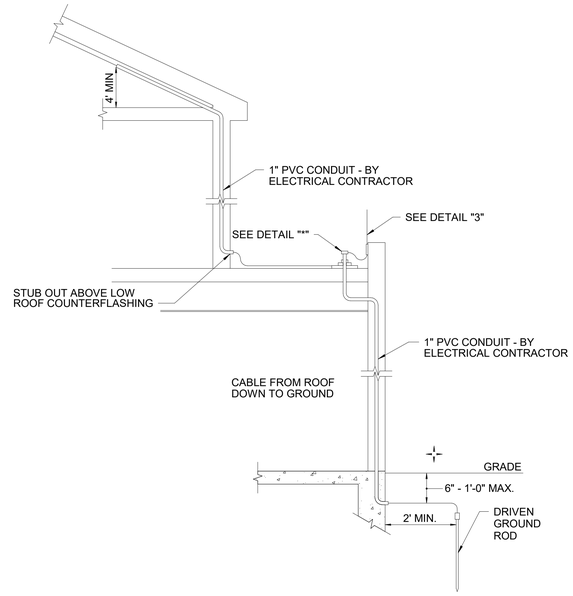

2 E503 **TYPICAL DOWNLEAD ROUTING**
Scale: 3/32" = 1'-0"

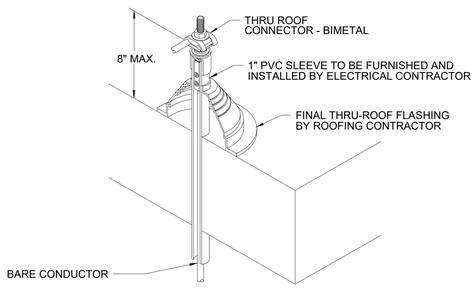

3 E503 **THRU ROOF DETAIL**
Scale: 1/16" = 1'-0"

AECOM

PROJECT

NEW SECURITY FORCES BUILDING

PAYNE BLVD.
CHARLOTTE, NORTH CAROLINA 28208

CLIENT

NORTH CAROLINA AIR NATIONAL GUARD - 145TH AIRLIFT WING

145TH AIRLIFT WING
4930 MINUTEMAN WAY
CHARLOTTE, NORTH CAROLINA 28208

ARCHITECT/DESIGNER

AECOM

277 W NATIONWIDE BLVD
COLUMBUS, OH 43215
614-464-4500

CONSULTANTS

REGISTRATION

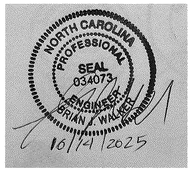

KEY PLAN

N

ISSUE/REVISION

I/R	DATE	DESCRIPTION
1	6-19-2025	B-3 SUBMITTAL - FINAL REV1
	03/08/24	B-3 SUBMITTAL - FINAL

PROJECT NUMBER

60637899

SHEET TITLE

ELECTRICAL DETAILS

SHEET NUMBER

E503

Last Plotted: 10/14/2025 12:47:31 PM
Filename: BM.36D.ISP-AMER (USA) 60637899.SFNCANG145thW37899_SFNC_ANG_R21_E.rvt

Printed on ____% Post-Consumer Recycled Content Paper

©2016 AECOM Corporation
15_ 15.50_ ELECTRICAL_ E503

15-ELECTRICAL-15.60-E601-ELECTRICAL ONE-LINE DIAGRAM
Project Management Initials: Designer: Designer Checker: Checker Approved: Approver/ARCH E1 30"x42"

GENERAL NOTES

A. REFER TO 600V FEEDER SCHEDULE ON SHEET E701 FOR MORE INFORMATION ON WIRE SIZING.

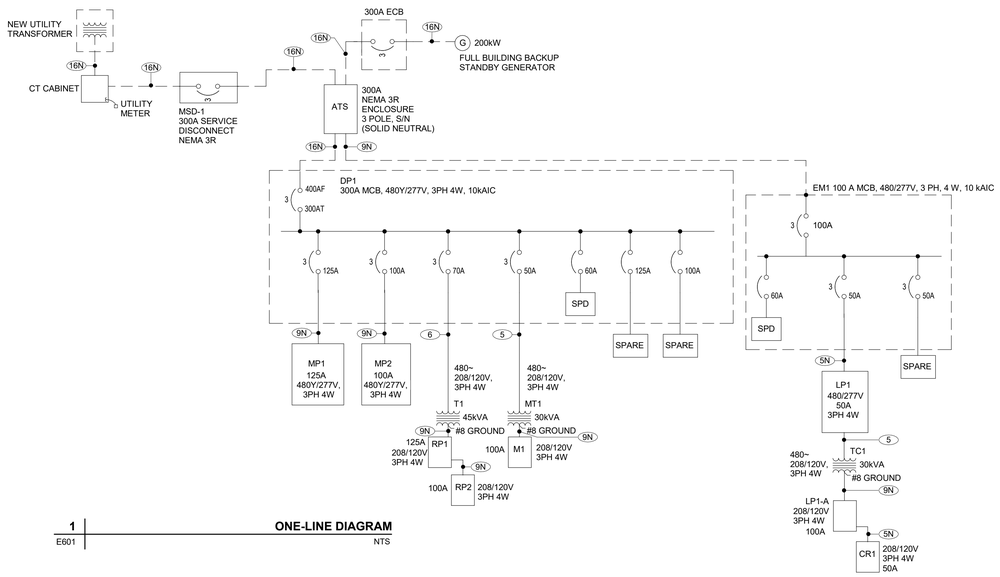

1 ONE-LINE DIAGRAM
E601 NTS

DISTRIBUTION PANEL: EM1

LOCATION: MECH ROOM 107
FED FROM:
MOUNTING: SURFACE - NEMA 1
MAIN DEVICE: 600 A MCB
BUS AMPS: 400 A
VOLTAGE: 480/277 Wye V. 3 Ø 4 W.
A.I.C. RATING: 10k
NOTES:

CKT	LOAD DESCRIPTION	WIRE SIZE & CONDUIT	POLES	FRAME	TRIP	LOAD	LOAD TYPE
1	SPD	--	3	60 A	60 A	0.0 kVA	--
2	LP1	--	3	50 A	50 A	19.1 kVA	Power; Spare;...
3	SPARE	--	3	50 A	50 A	0.0 kVA	--
4	SPACE	--	1	--	--	--	--
5	SPACE	--	1	--	--	--	--
6	SPACE	--	1	--	--	--	--

TOTAL LOAD: 19113 VA
TOTAL AMPS: 23 A

CONN. LOAD		TYPE DESCRIPTION	DIVERSITY	N.E.C. LOAD
	HT	Electric Heat	0%	0 VA
	AC	A/C Refrigeration...	0%	0 VA
	MM	Misc. Motors	100%	0 VA
	WH	Water Heating	100%	0 VA
90 VA	OL	Outdoor Lighting	125%	112.5 VA
1443 VA	LT	Indoor Lighting	125%	1803.75 VA
10380 VA	RP	Receptacles	NEC 220-13	10190 VA
	EX	Existing Demand	125%	0 VA
	MC	Misc. Continuous	125%	0 VA
3000 VA	MN	Misc. Non-Continuous	100%	3000 VA
	KT	Kitchen Equipment	65%	0 VA
		Largest Connected Motor	125%	0 VA

PANEL TOTALS	
CONNECTED LOAD:	19113 VA
N.E.C. LOAD:	15106.25 VA
N.E.C. CURRENT	
AT PANEL VOLTAGE:	18 A

NOTES:

DISTRIBUTION PANEL: DP1

LOCATION: Electrical Room 233
FED FROM:
MOUNTING: SURFACE - NEMA 1
MAIN DEVICE: 300 A MCB
BUS AMPS: 400 A
VOLTAGE: 480/277 Wye V. 3 Ø 4 W.
A.I.C. RATING: 10k
NOTES:

CKT	LOAD DESCRIPTION	WIRE SIZE & CONDUIT	POLES	FRAME	TRIP	LOAD	LOAD TYPE
1	SPD	--	3	200 A	200 A	0.0 kVA	--
2	T1		3	70 A	70 A	37.8 kVA	Spare; RP; MN
3	MT1		3	30 A	30 A	15.9 kVA	Motor; Spare
4	MP1		3	125 A	125 A	66.6 kVA	Motor; Spare;...
5	MP2		3	100 A	100 A	30.9 kVA	Motor; Spare
6	SPARE	--	3	100 A	100 A	0.0 kVA	--
7	SPARE	--	3	125 A	125 A	0.0 kVA	--
8	SPACE	--	1	--	--	--	--
9	SPACE	--	1	--	--	--	--
10	SPACE	--	1	--	--	--	--

TOTAL LOAD: 145696.3 VA
TOTAL AMPS: 175 A

CONN. LOAD		TYPE DESCRIPTION	DIVERSITY	N.E.C. LOAD
	HT	Electric Heat	0%	0 VA
	AC	A/C Refrigeration...	0%	0 VA
	MM	Misc. Motors	100%	0 VA
	WH	Water Heating	100%	0 VA
	OL	Outdoor Lighting	125%	0 VA
	LT	Indoor Lighting	125%	0 VA
36600 VA	RP	Receptacles	NEC 220-13	23300 VA
	EX	Existing Demand	125%	0 VA
	MC	Misc. Continuous	125%	0 VA
4200 VA	MN	Misc. Non-Continuous	100%	4200 VA
	KT	Kitchen Equipment	65%	0 VA
110985 VA		Largest Connected Motor	125%	138731.25 VA

PANEL TOTALS	
CONNECTED LOAD:	145696.3 VA
N.E.C. LOAD:	166231.25 VA
N.E.C. CURRENT	
AT PANEL VOLTAGE:	180 A

NOTES:

DISTRIBUTION PANEL: MP1

LOCATION: Electrical Room 233
FED FROM: DP1
MOUNTING: SURFACE - NEMA 1
MAIN DEVICE: 125 A MCB
BUS AMPS: 125 A
VOLTAGE: 480/277 Wye V. 3 Ø 4 W.
A.I.C. RATING: 10k
NOTES:

CKT	LOAD DESCRIPTION	WIRE SIZE & CONDUIT	POLES	FRAME	TRIP	Load	LOAD TYPE
1	SPD	--	3	60 A	60 A	0.0 kVA	--
2	RTU-1 - OUTDOOR/LOW ROOF		3	90 A	90 A	45.7 kVA	Motor
3	EUH-1 108		3	20 A	20 A	3.7 kVA	Motor
4	EUH-1 107		3	20 A	20 A	3.7 kVA	Motor
5	EUH-1 100		3	20 A	20 A	3.7 kVA	Motor
6	EUH-1 210		3	20 A	20 A	3.7 kVA	Motor
7	EUH-1 212		3	20 A	20 A	3.7 kVA	Motor
8	CUH-1 107		3	20 A	20 A	3.0 kVA	MN
9	SPARE	--	3	90 A	90 A	0.0 kVA	--
10	SPARE	--	3	20 A	20 A	0.0 kVA	--
11	SPACE	--	1	--	--	--	--
12	SPACE	--	1	--	--	--	--

TOTAL LOAD: 66629.32 VA
TOTAL AMPS: 80 A

CONN. LOAD		TYPE DESCRIPTION	DIVERSITY	N.E.C. LOAD
	HT	Electric Heat	0%	0 VA
	AC	A/C Refrigeration...	0%	0 VA
	MM	Misc. Motors	100%	0 VA
	WH	Water Heating	100%	0 VA
	OL	Outdoor Lighting	125%	0 VA
	LT	Indoor Lighting	125%	0 VA
	RP	Receptacles	NEC 220-13	0 VA
	EX	Existing Demand	125%	0 VA
	MC	Misc. Continuous	125%	0 VA
3000 VA	MN	Misc. Non-Continuous	100%	3000 VA
	KT	Kitchen Equipment	65%	0 VA
64205 VA		Largest Connected Motor	125%	80256.25 VA

PANEL TOTALS	
CONNECTED LOAD:	66629.32 VA
N.E.C. LOAD:	83256.25 VA
N.E.C. CURRENT	
AT PANEL VOLTAGE:	95 A

NOTES:

PANELBOARD: MP2

LOCATION: Electrical Room 233
MOUNTING: SURFACE NEMA 1
MAIN DEVICE: 100 A MCB
BUS AMPS: 100 A
VOLTAGE: 480/277 Wye V. 3 ø 4 W.
A.I.C. RATING: 10k
SPECIAL:

LOAD DESCRIPTION	TYP.	WIRE	BKR	PLS	#	A		B		C		#	PLS	BKR	WIRE	TYP.	LOAD DESCRIPTION
					1	0.0	1.8					2					
SPD	--	--	60 A	3	3			0.0	1.8			4	3	20 A		Motor	TB-2 116
					5					0.0	1.8	6					
					7	0.6	0.3					8					
TB-1 103	Motor		20 A	3	9			0.6	0.3			10	3	20 A		Motor	TB-4 106
					11					0.6	0.3	12					
					13	1.8	0.5					14					
TB-3 116	Motor		20 A	3	15			1.8	0.5			16	3	20 A		Motor	TB-6 115
					17					1.8	0.5	18					
					19	0.7	0.4					20					
TB-5 116	Motor		20 A	3	21			0.7	0.4			22	3	20 A		Motor	TB-8 222
					23					0.7	0.4	24					
					25	0.4	0.6					26					
TB-7 116	Motor		20 A	3	27			0.4	0.6			28	3	20 A		Motor	TB-10 214
					29					0.4	0.6	30					
					31	0.5	0.9					32					
TB-9 222	Motor		20 A	3	33			0.5	0.9			34	3	20 A		Motor	TB-12 222
					35					0.5	0.9	36					
					37	0.5	0.0					38					
TB-11 222	Motor		20 A	3	39			0.5	0.0			40	3	20 A	--	--	SPARE
					41					0.5	0.0	42					
					43	1.3	0.0					44					
TB-13 222	Motor		20 A	3	45			1.3	0.0			46	3	20 A	--	--	SPARE
					47					1.3	0.0	48					
SPACE	--	--	--	1	49	--	--					50	1	--	--	--	SPACE
SPACE	--	--	--	1	51			--	--			52	1	--	--	--	SPACE
SPACE	--	--	--	1	53					--	--	54	1	--	--	--	SPACE
			TOTAL LOAD:		10 kVA			10 kVA		10 kVA							
			TOTAL AMPS:		37 A			37 A		37 A							

CONN....		TYPE DESCRIPTION	DIVERSITY	
0 VA	HT	Electric Heat	0%	0 VA
0 VA	AC	A/C Refrigeration	0%	0 VA
0 VA	...	Misc. Motors	100%	0 VA
0 VA	...	Water Heating	100%	0 VA
0 VA	OL	Outdoor Lighting	125%	0 VA
0 VA	LT	Indoor Lighting	125%	0 VA
0 VA	RP	Receptacles	NEC 220-13	0 VA
0 VA	EX	Existing Demand	125%	0 VA
0 VA	MC	Misc. Continuous	125%	0 VA
0 VA	MN	Misc. Non-Continuous	100%	0 VA
0 VA	KT	Kitchen Equipment	65%	0 VA
30900 VA		Largest Connected Motor	125%	38625 VA

PANEL TOTALS	
CONNECTED LOAD:	30900 VA
N.E.C. LOAD	38625 VA
N.E.C. CURRENT	
AT PANEL VOLTAGE	39 A

NOTES:

Last Plotted: 10/14/2025 12:47:32 PM
Filename: BIM 360/SF-NAGR (USA) 60637899-SFNCANG145/60637899_SF-NC_ANG_R21_E.rvt
Printed on ____% Post-Consumer Recycled Content Paper

AECOM

PROJECT

NEW SECURITY FORCES BUILDING

PAYNE BLVD.
CHARLOTTE, NORTH CAROLINA 28208

CLIENT

NORTH CAROLINA AIR NATIONAL GUARD - 145TH AIRLIFT WING

145TH AIRLIFT WING
4930 MINUTEMAN WAY
CHARLOTTE, NORTH CAROLINA 28208

ARCHITECT/DESIGNER

AECOM

277 W NATIONWIDE BLVD
COLUMBUS, OH 43215
614-464-4500

CONSULTANTS

REGISTRATION

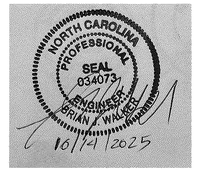

KEY PLAN

ISSUE/REVISION

I/R	DATE	DESCRIPTION
1	6-19-2025	B-3 SUBMITTAL - FINAL REV1
	09/06/23	B-3 SUBMITTAL - FINAL

PROJECT NUMBER

60637899

SHEET TITLE

ELECTRICAL ONE-LINE DIAGRAM

SHEET NUMBER

E601

©2016 AECOM Corporation
15_ 15.60_ ELECTRICAL_ E601

MECHANICAL ELECTRICAL REQUIREMENTS

Mark	VOLTAGE	PHASE	HORSEPOWER/ WATTS	LOCATION/ROOM NUMBER	PANEL	CIRCUIT NO.	CIRCUIT PROTECTION DEVICE	CIRCUIT SIZE	CONTROLLER DISCONNECT				CONTROLLER				DISCONNECT AT MOTOR			REMARKS
									TYPE	SIZE	BY	LOCATE	TYPE	SIZE	BY	LOCATE	TYPE	SIZE	BY	
ACCU-1	208.0 V	1	17A	OUTDOOR/LOW ROOF	M1	2,4	20/2 CB	2#12,12G,3/4"C	NFDS 3R	30/2	DIV. 26	NEAR UNIT	BMS CONT	---	DIV. 23	---	SEE	CONTROLLER	DISCONNECT	
ACCU-2	208.0 V	1	17A	OUTDOOR/LOW ROOF	M1	11,13	20/2 CB	2#12,12G,3/4"C	NFDS 3R	30/2	DIV. 26	NEAR UNIT	BMS CONT	---	DIV. 23	---	SEE	CONTROLLER	DISCONNECT	
EF-1	120.0 V	1	3.HP	MENS' RR 110	M1	7	15/1 CB	2#12,12G,3/4"C	MMS	00	DIV. 26	NEAR UNIT	BMS CONT	---	DIV. 23	---	NFDS	30/1	DIV. 26	
EF-2	120.0 V	1	0.07 HP	CORRIDOR 222	M1	1	15/1 CB	2#12,12G,3/4"C	MMS	00	DIV. 26	NEAR UNIT	BMS CONT	---	DIV. 23	---	NFDS	30/1	DIV. 26	
ELV-1	208.0 V	3		ELEVATOR	M1	15,17,19	15/3 CB	3#12, 12G, 3/4"C	NFDS	30/3										
ESP-1	120.0 V	1	0.5HP	ELEVATOR PIT (SUMP PUMP)	M1	5	20/1 CB	2#12,12G,3/4"C	FDS	30/1	DIV. 26	NEAR UNIT	FLOAT SWITCH	---	DIV.22	---	SEE	CONTROLLER	DISCONNECT	
EUH-1	480.0 V	3	3KW	MECH RM 107	MP1	3	15/3 CB	3#12, 12G, 3/4"C	NFDS	30/3	DIV. 26	ON UNIT	TSTAT	---	DIV. 23	---	SEE	CONTROLLER	DISCONNECT	
EUH-1	480.0 V	3	3.7KW	STAIR 108	MP1	4	15/3 CB	3#12, 12G, 3/4"C	NFDS	30/3	MANUFACTURER	ON UNIT	TSTAT	---	DIV. 23	---	SEE	CONTROLLER	DISCONNECT	
EUH-1	480.0 V	3	3KW	VEST 100	MP1	5	15/3 CB	3#12, 12G, 3/4"C	NFDS	30/3	DIV. 26	ON UNIT	TSTAT	---	DIV. 23	---	SEE	CONTROLLER	DISCONNECT	
EUH-1	480.0 V	3	3KW	VEST 210	MP1	6	15/3 CB	3#12, 12G, 3/4"C	NFDS	---	MANUFACTURER	ON UNIT	BMS CONT	---	DIV 23	---	SEE	CONTROLLER	DISCONNECT	
EUH-1	480.0 V	3	3KW	STAIR 212	MP1	7	15/3 CB	3#12, 12G, 3/4"C	NFDS	---	MANUFACTURER	ON UNIT	BMS CONT	---	DIV 23	---	SEE	CONTROLLER	DISCONNECT	
EWH-1	120.0 V	3	29A	MECH RM 107	M1	9	60/3 CB	3#6,#10G, 1"C	NFDS	60/3	DIV. 26	NEAR UNIT	BMS CONT	---	DIV. 23	---	SEE	CONTROLLER	DISCONNECT	
RTU-1	480.0 V	3	84A	OUTDOOR/LOW ROOF	MP1	2	90/3 CB	3#3, #8G,1-1/4"C	VFD	---	DIV. 23	---	VFD	---	DIV 23	---	SEE	CONTROLLER	DISCONNECT	PROVIDE 120V CIRCUIT FOR FACTORY MOUNTED RECPT
TB-1	480.0 V	3	2.4KW	PASS/ID 103	MP2	7,9,11	15/3 CB	3#12, 12G, 3/4"C	NFDS	---	MANUFACTURER	ON UNIT	BMS CONT	---	DIV 23	---	SEE	CONTROLLER	DISCONNECT	
TB-2	480.0 V	3	5.1KW	CORRIDOR 116	MP2	2,4,6	15/3 CB	3#12, 12G, 3/4"C	NFDS	---	MANUFACTURER	ON UNIT	BMS CONT	---	DIV 23	---	SEE	CONTROLLER	DISCONNECT	
TB-3	480.0 V	3	3.9KW	CORRIDOR 116	MP2	13,15,17	15/3 CB	3#12, 12G, 3/4"C	NFDS	---	MANUFACTURER	ON UNIT	BMS CONT	---	DIV 23	---	SEE	CONTROLLER	DISCONNECT	
TB-4	480.0 V	3	6.6KW	BREAK 106	MP2	8,10,12	15/3 CB	3#12, 12G, 3/4"C	NFDS	---	MANUFACTURER	ON UNIT	BMS CONT	---	DIV 23	---	SEE	CONTROLLER	DISCONNECT	
TB-5	480.0 V	3	8.9KW	CORRIDOR 116	MP2	19,21,23	15/3 CB	3#12, 12G, 3/4"C	NFDS	---	MANUFACTURER	ON UNIT	BMS CONT	---	DIV 23	---	SEE	CONTROLLER	DISCONNECT	
TB-6	480.0 V	3	2.6KW	BDOC 115	MP2	14,16,18	15/3 CB	3#12, 12G, 3/4"C	NFDS	--	MANUFACTURER	ON UNIT	BMS CONT	---	DIV 23	---	SEE	CONTROLLER	DISCONNECT	
TB-7	480.0 V	3	4.6KW	CORRIDOR 116	MP2	25,27,29	15/3 CB	3#12, 12G, 3/4"C	NFDS	---	MANUFACTURER	ON UNIT	BMS CONT	---	DIV 23	---	SEE	CONTROLLER	DISCONNECT	
TB-8	480.0 V	3	4.5KW	CORRIDOR 222	MP2	20,22,24	15/3 CB	3#12, 12G, 3/4"C	NFDS	---	MANUFACTURER	ON UNIT	BMS CONT	---	DIV 23	---	SEE	CONTROLLER	DISCONNECT	
TB-9	480.0 V	3	4.1KW	CORRIDOR 222	MP2	31,33,35	15/3 CB	3#12, 12G, 3/4"C	NFDS	---	MANUFACTURER	ON UNIT	BMS CONT	---	DIV 23	---	SEE	CONTROLLER	DISCONNECT	
TB-10	480.0 V	3	1.2KW	HOTELING STATIONS 214	MP2	26,28,30	15/3 CB	3#12, 12G, 3/4"C	NFDS	---	MANUFACTURER	ON UNIT	BMS CONT	---	DIV 23	---	SEE	CONTROLLER	DISCONNECT	
TB-11	480.0 V	3	3.9KW	CORRIDOR 222	MP2	37,39,41	15/3 CB	3#12, 12G, 3/4"C	NFDS	---	MANUFACTURER	ON UNIT	BMS CONT	---	DIV 23	---	SEE	CONTROLLER	DISCONNECT	
TB-12	480.0 V	3	5.4KW	CORRIDOR 222	MP2	32,34,36	15/3 CB	3#12, 12G, 3/4"C	NFDS	---	MANUFACTURER	ON UNIT	BMS CONT	---	DIV 23	---	SEE	CONTROLLER	DISCONNECT	
TB-13	480.0 V	3	2.6KW	CORRIDOR 222	MP2	43,45,47	15/3 CB	3#12, 12G, 3/4"C	NFDS	---	MANUFACTURER	ON UNIT	BMS CONT	---	DIV 23	---	SEE	CONTROLLER	DISCONNECT	

BOD LIGHTING FIXTURE SCHEDULE

LUMINAIRE ID	VOLTAGE	WATTAGE	MANUFACTURER	MODEL	DESCRIPTION
D1	277	9	COOPER LIGHTING SOLUTIONS - HALO	RL3059FSD2W1EWH -500LM -3500K	6" LED ROUND DOWNLIGHT.
D2	277	9	COOPER LIGHTING SOLUTIONS - HALO		SAME AS D1 EXCEPT PROVIDE WATER TIGHT HOUSING FOR USE IN WET AREAS (SHOWERS).
L4	277	15	PRUDENTIAL LIGHTING	BPRO3-REC-LED35-LO-4FT-LGP	RECESSED LIGHTING FIXTURE, 4' LENGTH.PROVIDE IN SERIES AS SHOWN ON PLANS.
R1	277	15	PRUDENTIAL LIGHTING	BPRO3-REC-LED35-MO-4FT-LGP	SAME AS L4 EXCEPT WALL FLUSH MOUNTED.
R2	277	40	LITHONIA LIGHTING	CPANL Switchable Lumen LED Flat Panel, 1x4, 24/33/44LM, 3500 K CCT, - 44LM	1X4 LED FLAT PANEL.
T2	277	20	LITHONIA LIGHTING	CPANL Switchable Lumen LED Flat Panel, 2x2, 24/33/44LM, 3500 K CCT, - 24LM	GENERAL PURPOSE LED TROFFER 2'X2' WITH 2000 NOMINAL LUMENS #A12 ACRYLIC LENS AND 3500K LEDS
W1	277	11	LITHONIA LIGHTING	ARC1 SERIES, 1500LM	LED WALL PACK, WATER TIGHT HOUSING.
X1	UNIV	3	LITHONIA LIGHTING	LQC SERIES	WALL MOUNT EXIT SIGN, RED LETTERS.
X2	UNIV	3	LITHONIA LIGHTING	EDGRC EXIT SERIES	RECESSED, A/C POWERED, UNIVERSAL MOUNT EDGE-LIT LED EXIT SIGN WITH RED LETTERS, BRUSHED ALUMINUM HOUSING, DOUBLE FACE, FIXTURE SHALL BE FURNISHED WITH DIRECTIONAL CHEVRONS PER PLANS

600V FEEDER SCHEDULE

BASED ON COPPER CONDUCTORS, THHN/THWN

MAXIMUM AMPACITY	FEEDER NUMBER	NUMBER OF SETS	CONDUCTOR SIZE			CONDUIT SIZE	MAXIMUM AMPACITY	FEEDER NUMBER	NUMBER OF SETS	CONDUCTOR SIZE			CONDUIT SIZE
			PHASE(3/C)	NEUTRAL	EQUIPMENT GROUND					PHASE(3/C)	NEUTRAL	EQUIPMENT GROUND	
15	1	1	12	--	12	3/4"	380	18	1	500KCMIL	--	3	3"
	1N			12				18N			500KCMIL		3-1/2"
20	2	1	12	--	12	3/4"	420	19	1	600KCMIL	--	2	3"
	2N			12				19N			600KCMIL		3-1/2"
30	3	1	10	--	10	3/4"	460	20	2	4/0	--	2	2"
	3N			10				20N			4/0		2-1/2"
40	4	1	8	--	10	3/4"	510	21	2	250KCMIL	--	1	2-1/2"
	4N			8				21N			250KCMIL		
55	5	1	6	--	10	3/4"	620	22	2	350KCMIL	--	1/0	2-1/2"
	5N			6		1"		22N			350KCMIL		3"
70	6	1	4	--	8	1"	670	23	2	400KCMIL	--	1/0	3"
	6N			4		1-1/4"		23N			400KCMIL		
85	7	1	3	--	8	1-1/4"	760	24	2	500KCMIL	--	1/0	3"
	7N			3				24N			500KCMIL		3-1/2"
95	8	1	2	--	8	1-1/4"	840	25	2	600KCMIL	--	1/0	3"
	8N			2		1-1/2"		25N			600KCMIL		3-1/2"
110	9	1	1	--	6	1-1/2"	1005	26	3	400KCMIL	--	2/0	3"
	9N			1				26N			400KCMIL		
150	10	1	1/0	--	6	1-1/2"	1260	27	3	600KCMIL	--	3/0	3-1/2"
	10N			1/0		2"		27N			600KCMIL		
175	11	1	2/0	--	6	1-1/2"	1680	28	4	600KCMIL	--	4/0	3-1/2"
	11N			2/0		2"		28N			600KCMIL		
200	12	1	3/0	--	6	2"	2100	29	5	600KCMIL	--	250KCMIL	3-1/2"
	12N			3/0				29N			600KCMIL		4"
230	13	1	4/0	--	4	2"	2520	30	6	600KCMIL	--	350KCMIL	3-1/2"
	13N			4/0		2-1/2"		30N			600KCMIL		4"
255	14	1	250KCMIL	--	4	2"	3040	31	8	500KCMIL	--	400KCMIL	3-1/2"
	14N			250KCMIL		2-1/2"		31N			500KCMIL		4"
285	15	1	300KCMIL	--	4	2-1/2"	4200	32	10	600KCMIL	--	500KCMIL	3-1/2"
	15N			300KCMIL		3"		32N			600KCMIL		4"
310	16	1	350KCMIL	--	3	2-1/2"	5040	33	12	600KCMIL	--	700KCMIL	4"
	16N			350KCMIL		3"		33N			600KCMIL		
335	17	1	400KCMIL	--	3	2-1/2"	6300	34	15	600KCMIL	--	800KCMIL	4"
	17N			400KCMIL		3"		34N			600KCMIL		

FEEDER SCHEDULE NOTES:

1. CONDUCTOR SIZING BASED ON COPPER CONDUCTORS.

2. ALL CONDUCTOR SIZES ARE BASED ON CONDUIT LENGTHS OF 65 FEET FOR 120 VOLT BRANCH CIRCUITS AND 150 FEET FOR 277 VOLT BRANCH CIRCUITS. IF LENGTH EXCEEDS 65 FEET (120V, 20A CIRCUITS) OR 150 FEET (277V, 20A CIRCUITS), THEN USE WIRE SIZE DENOTED AND INCREASE CONDUIT SIZE AS REQUIRED BY NATIONAL ELECTRICAL CODE.

WIRE SIZE	CONDUCTORS	
	120V, 20A CIRCUIT	277V, 20A CIRCUIT
#10	65' TO 120'	150' TO 240'
#8	120' TO 180'	ABOVE 240'
#6	180' AND ABOVE	-

AECOM

PROJECT

NEW SECURITY FORCES BUILDING

PAYNE BLVD.
CHARLOTTE, NORTH CAROLINA 28208

CLIENT

NORTH CAROLINA AIR NATIONAL GUARD - 145TH AIRLIFT WING

145TH AIRLIFT WING
4930 MINUTEMAN WAY
CHARLOTTE, NORTH CAROLINA 28208

ARCHITECT/DESIGNER

AECOM

277 W NATIONWIDE BLVD
COLUMBUS, OH 43215
614-464-4500

CONSULTANTS

REGISTRATION

NORTH CAROLINA PROFESSIONAL SEAL 034073 ENGINEER BRIAN A. WALKER
10/14/2025

KEY PLAN

N

ISSUE/REVISION

I/R	DATE	DESCRIPTION
1	6-19-2025	B-3 SUBMITTAL - FINAL REV1
	09/06/23	B-3 SUBMITTAL - FINAL

PROJECT NUMBER

60637899

SHEET TITLE

ELECTRICAL SCHEDULES

SHEET NUMBER

E701

15-ELECTRICAL-15.70-E701-ELECTRICAL SCHEDULES
Designer: Designer Checker: Checker Approved: Approver ARCH E1 30"x42"
Project Management Initials:
Last Plotted: 10/14/2025 12:47:33 PM
Filename: BaM-560-ISP-AMER-USA\60637899-SFNCANG145thSW\60637899_SF-NC_ANG_R21_E.rvt
Printed on ___ % Post-Consumer Recycled Content Paper
©2016 AECOM Corporation
15_ 15.70_ ELECTRICAL_ E701

PANELBOARD: RP1

LOCATION: Electrical Room 233 **VOLTAGE:** 208/120 Wye V. 3 ø 4 W.
MOUNTING: SURFACE NEMA 1 **A.I.C. RATING:** 10k
MAIN DEVICE: 125 A MCB **SPECIAL:**
BUS AMPS: 125 A

LOAD DESCRIPTION	TYP.	WIRE	BKR	PLS	#	A		B		C		#	PLS	BKR	WIRE	TYP.	LOAD DESCRIPTION
TV 102B	RP		20 A	1	1	0.2	0.7					2	1	20 A		RP	RP 107
TV 102A	RP		20 A	1	3			0.4	0.7			4	1	20 A		RP	RP FLOOR 102A
TV AND RP 106	RP		20 A	1	5					0.4	0.9	6	1	20 A		RP	RP 103
RP 100, 101	RP		20 A	1	7	1.1	1.6					8	1	20 A		RP	RP RESTROOMS 1F
RP 114, 115	RP		20 A	1	9			1.1	0.0			10	1	20 A	--	--	SPARE
PROJECTOR 102A	MN		20 A	1	11					1.2	0.0	12	1	20 A	--	--	SPARE
RP 104	RP		20 A	1	13	0.9	1.4					14	1	20 A		RP...	RP 102B
RP 102A	RP		20 A	1	15			1.3	0.9			16	1	20 A		RP	RP 105
REFRIGERATOR 106	RP		20 A	1	17					1.2	6.6	18				Spare; RP	RP2
SPARE	--	--	20 A	1	19	0.0	6.7					20	3	20 A			
SPARE	--	--	20 A	1	21			0.0	6.8			22					
SPARE	--	--	20 A	1	23					0.0	0.9	24	1	20 A		RP	RP COUNTER 106
SPARE	--	--	20 A	1	25	0.0						26					
SPARE	--	--	20 A	1	27			0.0	1.4			28	1	20 A		RP	RP 108, 109, 112
SPARE	--	--	20 A	1	29					0.0	1.4	30	1	20 A		RP	TV BDOC 115
SPARE	--	--	20 A	1	31	0.0	0.0					32	1	20 A	--	--	SPARE
SPACE	--	--	--	1	33			--	--			34	1	--	--	--	SPACE
SPACE	--	--	--	1	35					--	--	36	1	--	--	--	SPACE
SPACE	--	--	--	1	37	--	--					38	1	--	--	--	SPACE
SPACE	--	--	--	1	39			--	--			40	1	--	--	--	SPACE
SPACE	--	--	--	1	41					--	--	42	1	--	--	--	SPACE
					TOTAL LOAD:	13 kVA		13 kVA		13 kVA							
					TOTAL AMPS:	105 A		105 A		105 A							

CONN....		TYPE DESCRIPTION	DIVERSITY	
0 VA	HT	Electric Heat	0%	0 VA
0 VA	AC	A/C Refrigeration	0%	0 VA
0 VA	...	Misc. Motors	100%	0 VA
0 VA	...	Water Heating	100%	0 VA
0 VA	OL	Outdoor Lighting	125%	0 VA
0 VA	LT	Indoor Lighting	125%	0 VA
36600 VA	RP	Receptacles	NEC 220-13	23300 VA
0 VA	EX	Existing Demand	125%	0 VA
0 VA	MC	Misc. Continuous	125%	0 VA
1200 VA	MN	Misc. Non-Continuous	100%	1200 VA
0 VA	KT	Kitchen Equipment	65%	0 VA
0 VA		Largest Connected Motor	125%	0 VA

PANEL TOTALS

CONNECTED LOAD:	37800 VA
N.E.C. LOAD	24500 VA
N.E.C. CURRENT	
AT PANEL VOLTAGE	68 A

NOTES:

PANELBOARD: RP2

LOCATION: Electrical Room 233 **VOLTAGE:** 208/120 Wye V. 3 ø 4 W.
MOUNTING: SURFACE NEMA 1 **A.I.C. RATING:** 10k
MAIN DEVICE: 100 A MCB **SPECIAL:**
BUS AMPS: 100 A

LOAD DESCRIPTION	TYP.	WIRE	BKR	PLS	#	A		B		C		#	PLS	BKR	WIRE	TYP.	LOAD DESCRIPTION
RP 209, 210, 211	RP		20 A	1	1	0.9	1.6					2	1	20 A		RP	RP 206, 207, COFFEE...
RP	RP		20 A	1	3			1.1	1.4			4	1	20 A		RP	RP 202, 203
RP 204, 205	RP		20 A	1	5					1.4	1.4	6	1	20 A		RP	RP WORKSTATION...
RP WORKSTATION...	RP		20 A	1	7	1.6	1.1					8	1	20 A		RP	RP 201
RP WORKSTATION...	RP		20 A	1	9			1.6	1.1			10	1	20 A		RP	RP 208, 212,...
RP WORKSTATIONS...	RP		20 A	1	11					1.4	1.1	12	1	20 A		RP	RP AND TV 200
RP WORKSTATIONS...	RP		20 A	1	13	1.4	0.0					14	1	20 A	--	--	SPARE
RP WORKSTATIONS...	RP		20 A	1	15			1.4	0.0			16	1	20 A	--	--	SPARE
RP WORKSTATIONS...	RP		20 A	1	17					1.4	0.0	18	1	20 A	--	--	SPARE
SPARE	--	--	20 A	1	19	0.0	0.0					20	1	20 A	--	--	SPARE
SPARE	--	--	20 A	1	21			0.0	0.0			22	1	20 A	--	--	SPARE
SPARE	--	--	20 A	1	23					0.0	0.0	24	1	20 A	--	--	SPARE
SPARE	--	--	20 A	1	25	0.0	0.0					26	1	20 A	--	--	SPARE
SPARE	--	--	20 A	1	27			0.0	0.0			28	1	20 A	--	--	SPARE
SPARE	--	--	20 A	1	29					0.0	0.0	30	1	20 A	--	--	SPARE
SPACE	--	--	--	1	31	--	--					32	1	--	--	--	SPACE
SPACE	--	--	--	1	33			--	--			34	1	--	--	--	SPACE
SPACE	--	--	--	1	35					--	--	36	1	--	--	--	SPACE
SPACE	--	--	--	1	37	--	--					38	1	--	--	--	SPACE
SPACE	--	--	--	1	39			--	--			40	1	--	--	--	SPACE
SPACE	--	--	--	1	41					--	--	42	1	--	--	--	SPACE
					TOTAL LOAD:	7 kVA		7 kVA		7 kVA							
					TOTAL AMPS:	55 A		56 A		57 A							

CONN....		TYPE DESCRIPTION	DIVERSITY	
0 VA	HT	Electric Heat	0%	0 VA
0 VA	AC	A/C Refrigeration	0%	0 VA
0 VA	...	Misc. Motors	100%	0 VA
0 VA	...	Water Heating	100%	0 VA
0 VA	OL	Outdoor Lighting	125%	0 VA
0 VA	LT	Indoor Lighting	125%	0 VA
20100 VA	RP	Receptacles	NEC 220-13	15050 VA
0 VA	EX	Existing Demand	125%	0 VA
0 VA	MC	Misc. Continuous	125%	0 VA
0 VA	MN	Misc. Non-Continuous	100%	0 VA
0 VA	KT	Kitchen Equipment	65%	0 VA
0 VA		Largest Connected Motor	125%	0 VA

PANEL TOTALS

CONNECTED LOAD:	20100 VA
N.E.C. LOAD	15050 VA
N.E.C. CURRENT	
AT PANEL VOLTAGE	42 A

NOTES:

PANELBOARD: M1

LOCATION: Electrical Room 233 **VOLTAGE:** 208/120 Wye V. 3 ø 4 W.
MOUNTING: SURFACE NEMA 1 **A.I.C. RATING:** 10k
MAIN DEVICE: 100 A MCB **SPECIAL:**
BUS AMPS: 100 A

LOAD DESCRIPTION	TYP.	WIRE	BKR	PLS	#	A		B		C		#	PLS	BKR	WIRE	TYP.	LOAD DESCRIPTION
EF-2 222	Mo...		20 A	1	1	0.2	1.5					2	2	20 A		Motor	ACCU-1 OUTDOOR
SPARE	--	--	20 A	1	3			0.0	1.5			4					
ESP-1 - ELEVATOR	Mo...		20 A	1	5					1.2	0.7	6	2	20 A		Motor	FCU-1 114
EF-1 MENS' 110	Mo...		20 A	1	7	0.6	0.7					8					
EWH-1 107	Mo...		20 A	1	9			1.8	0.0			10	1	20 A	--	--	SPARE
ACCU-2 OUTDOOR	Motor		20 A	2	11					1.5	0.0	12	1	20 A	--	--	SPARE
					13	1.5	0.0					14	1	20 A	--	--	SPARE
ELV-1 - ELEVATOR	Motor		20 A	3	15			1.7	0.0			16	1	20 A	--	--	SPARE
					17					1.7	0.0	18	1	20 A	--	--	SPARE
					19	1.7	0.0					20	1	20 A	--	--	SPARE
SPARE	--	--	20 A	1	21			0.0	0.0			22	1	20 A	--	--	SPARE
SPARE	--	--	20 A	1	23					0.0	0.0	24	1	20 A	--	--	SPARE
SPARE	--	--	20 A	1	25	0.0	0.0					26	1	20 A	--	--	SPARE
SPACE	--	--	--	1	27			--	--			28	1	--	--	--	SPACE
SPACE	--	--	--	1	29					--	--	30	1	--	--	--	SPACE
					TOTAL LOAD:	6 kVA		5 kVA		5 kVA							
					TOTAL AMPS:	50 A		41 A		41 A							

CONN....		TYPE DESCRIPTION	DIVERSITY	
0 VA	HT	Electric Heat	0%	0 VA
0 VA	AC	A/C Refrigeration	0%	0 VA
0 VA	...	Misc. Motors	100%	0 VA
0 VA	...	Water Heating	100%	0 VA
0 VA	OL	Outdoor Lighting	125%	0 VA
0 VA	LT	Indoor Lighting	125%	0 VA
0 VA	RP	Receptacles	NEC 220-13	0 VA
0 VA	EX	Existing Demand	125%	0 VA
0 VA	MC	Misc. Continuous	125%	0 VA
0 VA	MN	Misc. Non-Continuous	100%	0 VA
0 VA	KT	Kitchen Equipment	65%	0 VA
15880 VA		Largest Connected Motor	125%	19850 VA

PANEL TOTALS

CONNECTED LOAD:	15880 VA
N.E.C. LOAD	19850 VA
N.E.C. CURRENT	
AT PANEL VOLTAGE	48 A

NOTES:

PANELBOARD: LP1

LOCATION: Electrical Room 233 **VOLTAGE:** 480/277 Wye V. 3 ø 4 W.
MOUNTING: SURFACE NEMA 1 **A.I.C. RATING:** 10k
MAIN DEVICE: 50 A MCB **SPECIAL:**
BUS AMPS: 50 A

LOAD DESCRIPTION	TYP.	WIRE	BKR	PLS	#	A		B		C		#	PLS	BKR	WIRE	TYP.	LOAD DESCRIPTION
					1	0.0	0.1					2	1	20 A		LT	LTG ELEVATOR SHA...
SPD	--	--	60 A	3	3			0.0	0.5			4	1	20 A		LT	BACKLIT SIGN, EXT
					5					0.0	4.8	6					
LTG EAST LEVEL 1	OL...		20 A	1	7	0.4	4.5					8	3	20 A		Spare; RP...	TC1
LTG ELEVATOR SHA...	LT		20 A	1	9			0.1	4.1			10					
LTG LEVEL 2	Po...		20 A	1	11					1.8	0.0	12	1	20 A	--	--	SPARE
LTG TRAINING AND...	Po...		20 A	1	13	1.5	0.0					14	1	20 A	--	--	SPARE
LTG NORTHWEST...	Po...		20 A	1	15			1.4	0.0			16	1	20 A	--	--	SPARE
SPARE	--	--	20 A	1	17					0.0	0.0	18	1	20 A	--	--	SPARE
SPARE	--	--	20 A	1	19	0.0	0.0					20	1	20 A	--	--	SPARE
SPACE	--	--	--	1	21			--	--			22	1	--	--	--	SPACE
SPACE	--	--	--	1	23					--	--	24	1	--	--	--	SPACE
SPACE	--	--	--	1	25	--	--					26	1	--	--	--	SPACE
SPACE	--	--	--	1	27			--	--			28	1	--	--	--	SPACE
SPACE	--	--	--	1	29					--	--	30	1	--	--	--	SPACE
					TOTAL LOAD:	6 kVA		6 kVA		7 kVA							
					TOTAL AMPS:	24 A		22 A		24 A							

CONN....		TYPE DESCRIPTION	DIVERSITY	
0 VA	HT	Electric Heat	0%	0 VA
0 VA	AC	A/C Refrigeration	0%	0 VA
0 VA	...	Misc. Motors	100%	0 VA
0 VA	...	Water Heating	100%	0 VA
90 VA	OL	Outdoor Lighting	125%	112.5 VA
1443 VA	LT	Indoor Lighting	125%	1803.75 VA
10380 VA	RP	Receptacles	NEC 220-13	10190 VA
0 VA	EX	Existing Demand	125%	0 VA
0 VA	MC	Misc. Continuous	125%	0 VA
3000 VA	MN	Misc. Non-Continuous	100%	3000 VA
0 VA	KT	Kitchen Equipment	65%	0 VA
0 VA		Largest Connected Motor	125%	0 VA

PANEL TOTALS

CONNECTED LOAD:	19113 VA
N.E.C. LOAD	15106.25 VA
N.E.C. CURRENT	
AT PANEL VOLTAGE	18 A

NOTES:

PANELBOARD: LP1-A

LOCATION: Electrical Room 233 **VOLTAGE:** 208/120 Wye V. 3 ø 4 W.
MOUNTING: SURFACE NEMA 1 **A.I.C. RATING:** 10k
MAIN DEVICE: 100 A MCB **SPECIAL:**
BUS AMPS: 100 A

LOAD DESCRIPTION	TYP.	WIRE	BKR	PLS	#	A		B		C		#	PLS	BKR	WIRE	TYP.	LOAD DESCRIPTION
					1	0.0	1.2					2	1	20 A		RP	BMS PANEL 107
SPD	--	--	60 A	3	3			0.0	1.5			4	1	20 A		MN	FACP 107
					5					0.0	1.5	6	1	20 A		MN	MNS CP 107
SPACE	--	--	--	1	7	--	0.0					8	1	20 A	--	--	SPARE
					9			3.0	0.0			10	1	20 A	--	--	SPARE
CR1	Spare; RP		50 A	3	11					2.6	0.0	12	1	20 A	--	--	SPARE
					13	3.6	0.0					14	1	20 A	--	--	SPARE
SPACE	--	--	--	1	15			--	--			16	1	--	--	--	SPACE
SPACE	--	--	--	1	17					--	--	18	1	--	--	--	SPACE
					TOTAL LOAD:	5 kVA		5 kVA		4 kVA							
					TOTAL AMPS:	41 A		38 A		34 A							

CONN....		TYPE DESCRIPTION	DIVERSITY	
0 VA	HT	Electric Heat	0%	0 VA
0 VA	AC	A/C Refrigeration	0%	0 VA
0 VA	...	Misc. Motors	100%	0 VA
0 VA	...	Water Heating	100%	0 VA
0 VA	OL	Outdoor Lighting	125%	0 VA
0 VA	LT	Indoor Lighting	125%	0 VA
10380 VA	RP	Receptacles	NEC 220-13	10190 VA
0 VA	EX	Existing Demand	125%	0 VA
0 VA	MC	Misc. Continuous	125%	0 VA
3000 VA	MN	Misc. Non-Continuous	100%	3000 VA
0 VA	KT	Kitchen Equipment	65%	0 VA
0 VA		Largest Connected Motor	125%	0 VA

PANEL TOTALS

CONNECTED LOAD:	13380 VA
N.E.C. LOAD	13190 VA
N.E.C. CURRENT	
AT PANEL VOLTAGE	37 A

NOTES:

PANELBOARD: CR1

LOCATION: Communication Room 225 **VOLTAGE:** 208/120 Wye V. 3 ø 4 W.
MOUNTING: SURFACE NEMA 1 **A.I.C. RATING:** 10k
MAIN DEVICE: 50 A MCB **SPECIAL:**
BUS AMPS: 50 A

LOAD DESCRIPTION	TYP.	WIRE	BKR	PLS	#	A		B		C		#	PLS	BKR	WIRE	TYP.	LOAD DESCRIPTION
					1	0.0	0.8					2	1	20 A		RP	RACK 114
SPD	--	--	60 A	3	3			0.0	0.8			4	1	20 A		RP	RACK 114
					5					0.0	0.8	6	1	20 A		RP	RACK 114
RACK 114	RP		20 A	1	7	0.8	0.8					8	1	20 A		RP	RACK 114
RP 114	RP		20 A	1	9			1.8	0.0			10	1	30 A	--	--	SPARE
30A COMMS 114	RP		30 A	1	11					2.9	0.0	12	1	20 A	--	--	SPARE
RACK 114	RP		20 A	1	13	0.8	0.0					14	1	20 A	--	--	SPARE
SPACE	--	--	--	1	15			--	--			16	1	--	--	--	SPACE
SPACE	--	--	--	1	17					--	--	18	1	--	--	--	SPACE
					TOTAL LOAD:	3 kVA		3 kVA		4 kVA							
					TOTAL AMPS:	26 A		21 A		31 A							

CONN....		TYPE DESCRIPTION	DIVERSITY	
0 VA	HT	Electric Heat	0%	0 VA
0 VA	AC	A/C Refrigeration	0%	0 VA
0 VA	...	Misc. Motors	100%	0 VA
0 VA	...	Water Heating	100%	0 VA
0 VA	OL	Outdoor Lighting	125%	0 VA
0 VA	LT	Indoor Lighting	125%	0 VA
9180 VA	RP	Receptacles	NEC 220-13	9180 VA
0 VA	EX	Existing Demand	125%	0 VA
0 VA	MC	Misc. Continuous	125%	0 VA
0 VA	MN	Misc. Non-Continuous	100%	0 VA
0 VA	KT	Kitchen Equipment	65%	0 VA
0 VA		Largest Connected Motor	125%	0 VA

PANEL TOTALS

CONNECTED LOAD:	9180 VA
N.E.C. LOAD	9180 VA
N.E.C. CURRENT	
AT PANEL VOLTAGE	25 A

NOTES:

AECOM

PROJECT

NEW SECURITY FORCES BUILDING

PAYNE BLVD.
CHARLOTTE, NORTH CAROLINA 28208

CLIENT

NORTH CAROLINA AIR NATIONAL GUARD - 145TH AIRLIFT WING

145TH AIRLIFT WING
4930 MINUTEMAN WAY
CHARLOTTE, NORTH CAROLINA 28208

ARCHITECT/DESIGNER

AECOM

277 W NATIONWIDE BLVD
COLUMBUS, OH 43215
614-464-4500

CONSULTANTS

REGISTRATION

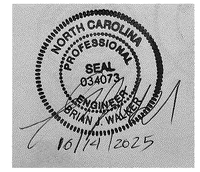

KEY PLAN

N

ISSUE/REVISION

I/R	DATE	DESCRIPTION
1	6-19-2025	B-3 SUBMITTAL - FINAL REV1
	03/08/24	B-3 SUBMITTAL - FINAL

PROJECT NUMBER

60637899

SHEET TITLE

ELECTRICAL PANEL SCHEDULES

SHEET NUMBER

E702

©2016 AECOM Corporation

15-ELECTRICAL-15.70-E702-ELECTRICAL PANEL SCHEDULES
Designer: Designer Checker: Checker Approved: Approver
Project Management Initials:
Last Plotted: 10/14/2025 12:47:34 PM
Filename: BIM 360:RP-AMER (USA) 60637899-SFNCANG145thSOS3789_SF-NC_ANG_R21_E.rvt

Printed on ___ % Post-Consumer Recycled Content Paper

16-TELECOM-16.00-T001-TELECOMUNICATIONS LEGEND. ABBREVIATIONS AND SYMBOLS
Project Management Initials: MR Designer: Designer Checked: Checker Approved: Approver ARCH E1 30"x42"

ABBREVIATIONS

%	PERCENT
&	AND
Ω	OHMS
¢	CENTERLINE
A/V	AUDIO/VISUAL
AC	ALTERNATING CURRENT
ACS	ACCESS CONTROL SYSTEM
AFF	ABOVE FINISHED FLOOR
AM	AMPLITUDE MODULATION
ANSI	AMERICAN NATIONAL STANDARD INSTITUTE
ARMM	RISER CABLE WITH OUTER SHIELD
AUX	AUXILIARY
AWG	AMERICAN WIRE GAUGE
BAS	BUILDING AUTOMATION SYSTEM
BET	BUILDING ENTRANCE TERMINAL
BICSI	BUILDING INDUSTRY CONSULTING SERVICES INTERNATIONAL
BMS	BUILDING MANAGEMENT SYSTEM
C	CONDUIT
CAT	CATEGORY
CATEGORY 3	CATEGORY 3
CATEGORY 6A	CATEGORY 6A
CLG	CEILING
CMR	COMPUTER ROOM
CO	CENTRAL OFFICE
CODEC	CODER/DECODER
CONC	CONCRETE
CP	CONSOLIDATION POINT
CPU	CENTRAL PROCESSING UNIT
D	DATA
D/A	DIGITAL TO ANALOG
DAS	DUAL ATTACHMENT STATION
dB	DECIBEL
DC	DIRECT CURRENT
DD	DATA DISTRIBUTION
DIA	DIAMETER
DIST	DISTRIBUTION
DPP	DATA PATCH PANEL
DTL	DETAIL
DTLS	DETAILS
E	EAST
EIA	ELECTRONIC INDUSTRIES ALLIANCE
EMI	ELECTROMAGNETIC INTERFERENCE
EMT	ELECTRICAL METALLIC TUBING
EQUIP	EQUIPMENT
ER	EQUIPMENT ROOM
FAX	FACSIMILE
FDF	FIBER DISTRIBUTION FRAME
FDU	FIBER DISTRIBUTION UNIT
FEXT	FAR END CROSSTALK
FO	FIBER OPTIC
FPC	FIBER PATCH CABLE
FPP	FIBER PATCH PANEL
FR	FIBER RISER
Gpbs	GIGA BITS PER SECOND
GHz	GIGAHERTZ
GND	GROUND
HC	HORIZONTAL CROSS-CONNECT
HH	HANDHOLE
HRZ	HORIZONTAL
HVB	HORIZONTAL VOICE BLOCK
HVP	HORIZONTAL VOICE PATCH PANEL
Hz	HERTZ
IAW	IN ACCORDANCE WITH
IC	INTERMEDIATE CROSS-CONNECT
IDC	INSULATION DISPLACEMENT CONNECTORS
IDF	INTERMEDIATE DISTRIBUTION FRAME
IEEE	INSTITUTE OF ELECTRICAL AND ELECTRONICS ENGINEERS
ISDN	INTEGRAGED SERVICES DIGITAL NETWORK
KB	KEY BACKUP
Kbps	KILO BITS PER SECOND
kHz	KILOHERTZ
km	KILOMETER
LAN	LOCAL AREA NETWORK
LCD	LIQUID CRYSTAL DISPLAY
LEC	LOCAL EXCHANGE CARRIER

ABBREVIATIONS

LED	LIGHT EMITTING DIODE
MAN	METROPOLITAN AREA NETWORK
MAX	MAXIMUM
Mbps	MEGA BITS PER SECOND
MC	MAIN CROSS-CONNECT
MDF	MAIN DISTRIBUTION FRAME
MHz	MEGAHERTZ
MH	MANHOLE
MIN	MINIMUM
MISC	MISCELLANEOUS
MM	MULTIMODE
MPOP	MINIMUM POINT OF PRESENCE
MTD	MOUNTED
mm	MILLIMETER
N/A	NOT APPLICABLE
W/	WITH
N	NORTH
NEC	NATIONAL ELECTRICAL CODE
NEG	NEGATIVE
NEXT	NEAR END CROSSTALK
NFPA	NATIONAL FIRE AND PROTECTION AGENCY
NIC	NOT IN CONTRACT
OC	ON CENTER
OPT	OPTICAL
OSP	OUTSIDE PLANT
OTDR	OPTICAL TIME DOMAIN REFLECTOMETER
PB	PULL BOX
PBX	PRIVATE BRANCH EXCHANGE
PC	PERSONAL COMPUTER
PDS	PROTECTIVE DISTRIBUTION SYSTEM
PNL	PANEL
POS	POSITIVE
POTS	PLAIN OLD TELEPHONE SERVICE
PP	PATCH PANEL
PR	PAIR
PVC	POLYVINYL CHLORIDE
R	RISER
RAF	RAISED ACCESS FLOOR
RF	RADIO FREQUENCY
RFI	RADIO FREQUENCY INTERFERENCE
RU	RACK MOUNTING UNIT (1.75")
RX	RECEIVE/RECEIVER
S	SOUTH
SHT	SHEET
SM	SINGLEMODE
SNR	SIGNAL-TO-NOISE RATIO
SP	SERVICE PROVIDER
SRG	SIGNAL REFERENCE GRID
STP	SHIELDED TWISTED PAIR/CABLES
STR	STRAND
SW	NETWORK SWITCH
SYS	SYSTEM
TBB	TELECOMMUNICATIONS BONDING BACKBONE
TEL	TELEPHONE
TELCO	TELEPHONE COMPANY
TELECOM	TELECOMMUNICATIONS
TERM	TERMINATION
TGB	TELECOMMUNICATIONS GROUNDING BUSBAR
TIA	TELECOMMUNICATIONS INDUSTRIES ASSOCIATION
TMGB	TELECOMMUNICATIONS MAIN GROUNDING BUSBAR
TR	TELECOMMUNICATIONS ROOM
TX	TRANSMIT/TRANSMITTER
TYP	TYPICAL
UG	UNDERGROUND
UL	UNDERWRITERS LABORATORIES
UON	UNLESS OTHERWISE NOTED
UPS	UNINTERRUPTIBLE POWER SYSTEM
UTP	UNSHIELDED TWISTED PAIR
V	VOICE
VBB	VOICE BACKBONE
VHD	VOICE HORIZONTAL DISTRIBUTION
W	WEST
WAN	WIDE AREA NETWORK
WAP	WIRELESS ACCESS POINT
WP	WEATHERPROOF

GENERAL DRAWING NOTES

1. THE DRAWINGS ARE DIAGRAMMATIC ONLY AND MAY NOT SHOW ALL COMPONENTS, MATERIALS, OFFSETS, BENDS, ELBOWS AND OTHER SPECIFIC ELEMENTS THAT MAY BE REQUIRED FOR A COMPLETE INSTALLATION. THE CONTRACTOR SHALL BE RESPONSIBLE FOR PROVIDING MATERIALS NEEDED FOR A COMPLETE AND FUNCTIONAL INSTALLATION.
2. PRIOR TO INSTALLATION OF DEVICES, FIELD-VERIFY DEVICE LOCATIONS WITH DUE REGARD TO AS-BUILT CONDITIONS, COORDINATION WITH THE WORK OF OTHER TRADES AND MANUFACTURERS' RECOMMENDATIONS.
3. COMMON LOW VOLTAGE CABLE TRAY IS SIZED AS INDICATED ON THE DRAWINGS. PROVIDE ALL MATERIALS AS NEEDED FOR A COMPLETE, MANUFACTURER-APPROVED SYSTEM USING CABLE TRAY MANUFACTURERS' MATERIALS AND PARTS WHEN AVAILABLE FROM THE MANUFACTURER, AND AS INTENDED. CHANGES IN DIRECTION AND INTERSECTIONS SHALL USE PRE-MANUFACTURED OR FIELD-INSTALLED SWEEPS AND TEES. SWEEPS AND TEES SHALL MAINTAIN A 1 FOOT MINIMUM RADIUS IN CHANGES OF DIRECTION.
4. CONDUIT BENDS SHALL BE SWEEPS TO MAINTAIN PROPER CABLE BEND RADIUS.CONDUITS SHALL BE DEBURRED, HAVE 200LB PULLSTRINGS AND BUSHINGS INSTALLED. CONDUIT SHALL TERMINATE WITH METAL BOND BUSHING TO BE BONDED TO GROUND AND PREVENT BURRS FROM DAMAGING CABLES.
5. UNLESS OTHERWISE NOTED, WORK AREA OUTLET CONDUITS SHALL BE A MINIMUM OF 1-1/4"DIAMETER EMT, STUB UP TO ABOVE ACCESSIBLE CEILING (IF AVAILABLE), AND ROUTED OVER TO THE NEAREST CABLE TRAY USING J-HOOKS
6. ALL CONDUIT TO TELECOMMUNICATIONS ROOM(S) FOR TELECOMMUNICATIONS CABLING SHALL TURN DOWN OR UP WITHIN 12" OF WALL OR IN AREA AS INDICATED ON FLOOR PLANS WHERE CABLE TRAY IS INSTALLED. CONDUITS FROM BELOW SHALL STUB UP 3" AFF. CONDUITS FROM ABOVE SHALL STUB DOWN TO 3" BELOW CEILING.
7. PULL BOXES AND JUNCTION BOXES SHALL BE PROVIDED PER LOCAL CODES AND STANDARDS TO FACILITATE THE EASE IN PULLING OF FUTURE CABLING. NO MORE THAN 180 DEGREES IN CONDUIT BENDS IS ALLOWED IN ANY CONDUIT RUN BETWEEN PULL BOXES. CONDUIT SHALL NOT EXCEED MORE THAN 100' IN LENGTH BETWEEN PULL BOXES. CONDUIT WILL NOT ENTER/EXIT ANY PULL BOX AT 90 DEGREEES OF ANY OTHER CONDUIT ENTERING THE PULL BOX. SIZED AND LOCATED PER TIA/EIA.
8. 120 VAC INPUT POWER CONDUCTORS SHALL NOT BE INSTALLED IN THE SAME CONDUIT AS LOW VOLTAGE AUDIO, VIDEO, CONTROL, DC POWER OR ANY OTHER LOW VOLTAGE CABLES. ELECTRICAL CONTRACTOR TO ENSURE PROPER SEPARATION OF CLASS 1, CLASS 2, AND CLASS 3 PER NEC 725-54 (D) AND OR AHJ.
9. CABLES SHALL BE SUPPORTED FROM THE BUILDING STRUCTURE BY APPROVED J-HOOKS OR SLINGS WHEN NOT IN CONDUIT OR COMMON LOW VOLTAGE CABLE TRAY. CABLES TRANSITIONING FROM CABLE TRAY TO CONDUIT SPANNING MORE THAN 3 FEET SHALL BE SUPPORTED.
10. ALL CABLING PASSING THROUGH WALL STRUCTURE SHALL BE SUPPORTED WITH CONDUIT, SLEEVE, FIRESTOP ASSEMBLY, ETC, AS REQUIRED THROUGH THE WALL STRUCTURE. PATHWAY SIZING SHALL ADHERE TO THE REFERENCED STANDARDS AND FILL RATIO REQUIREMENTS.
11. ALL INSTALLED CONDUITS, CABLETRAY, SLEEVES/SLOTS THAT PENETRATE FIRE RATED WALLS, FLOORS AND CEILINGS SHALL BE PROPERLY FIRESTOPPED PER CODE.LISTED FIRESTOP ASSEMBLIES SHALL BE USED TO PENETRATE FIRE & SMOKE WALLS FOR CABLE PATHWAYS.
12. PROVIDE DATA/SIGNAL CABLES, TERMINATION EQUIPMENT, TERMINATIONS, ETC., FROM THE VARIOUS DEVICES TO THE TR AS REPRESENTED IN THE TECHNOLOGY PLANS.
13. CABLES WITHIN CABLE TRAY SHALL BE PLACED IN A RANDOM FASHION WITHOUT BUNDLING THE CABLES. CABLE TIES SHALL NOT BE USED.
14. CABLES SHALL EXIT CABLE TRAY BY MEANS OF CABLE TRAY RADIUS DROP (I.E., WATERFALL).
15. HORIZONTAL CABLE SHALL BE PLENUM RATED WHEN INSTALLED IN A PLENUM SPACE OR WHEN INSTALLED ABOVE CEILING OR BELOW DROPPED FLOOR.
16. WALL BACK BOXES SHALL BE FLUSH MOUNT, 5" x 5" x 2-1/2" DEEP, WITH PLASTER REDUCING RINGS UNLESS OTHERWISE NOTED.
17. PROVIDE BLANK PLATES FOR BOXES LEFT EMPTY OR DENOTED AS "BLANK" FOR FUTURE INSTALLATIONS.
18. PRIOR TO ORDER, SUBMIT FACEPLATE, JACK, AND DEVICE COLOR SAMPLES TO ARCHITECT FOR REVIEW.
19. REFER TO ARCHITECTURAL DRAWINGS AND SPECIFICATIONS FOR PROPER OUTLET MOUNTING HEIGHTS AND LOCATIONS PRIOR TO ROUGH-IN.
20. REFER TO ELECTRICAL DRAWINGS AND SPECIFICATIONS FOR POWER CONDUITS,CIRCUITS, RECEPTACLES, CABLES, ETC.
21. REFER TO ELECTRICAL DRAWINGS AND SPECIFICATIONS FOR SHARED FLOOR BOXES AND POKETHRUS. REFER TO ELECTRICAL DRAWINGS FOR CONDUITS TO SUPPORT OTHER TECHNOLOGY SYSTEMS (ESS AND ADVANTOR CABLING INFRASTRUCTURE AND EQUIPMENT TO BE PROVIDED BY OTHERS).
22. REFER TO STRUCTURAL DRAWINGS AND SPECIFICATIONS FOR DIMENSIONED CORE HOLE PENETRATIONS.
23. REFER TO LIFE SAFETY DRAWINGS FOR FIRE & SMOKE WALL LOCATIONS.
24. FIELD VERIFY DIMENSIONS PRIOR TO INSTALLATION. NOTIFY THE DESIGNER OF ANY DEVIATIONS EXCEEDING 6 INCHES.
25. CONTRACTOR IS RESPONSIBLE FOR PRE-CONSTRUCTION SITE SURVEY AND STUDY TO VERIFY WIRELESS COVERAGE, AS WELL AS POST-CONSTRUCTION TO INSURE DESIRED COVERAGE AND PERFORM ANY MODIFICATIONS TO MAKE SYSTEM FULLY FUNCTIONAL PRIOR TO INSTALLATION
26. FOLLOW ANSI, BICSI, EIA/TIA STANDARDS, NEC, AND OTHER APPLICABLE STANDARDS AND CODES SHOWN IN SPECIFICATIONS.
27. FIBER PATCH CORDS PROVIDED BY OWNER.
28. CATEGORY 6A PATCH CORDS PROVIDED BY CONTRACTOR; SEE SYMBOL LIST FOR DETAILS.
29. TELECOM / IT STRUCTURED CABLING CONTRACTOR TO PROVIDE ALL ROOM TO ROOM CATEGORY 6A CABLING; REFER TO TA DRAWINGS FOR QUANTITIES AND LOCATIONS.
30. CATEGORY 6A CABLING PERMANENT LINK SHALL NOT EXCEED 90 m (295').
31. ESS, IDS, ACS, AND ADVANTOR CABLING INFRASTRUCTURE AND EQUIPMENT TO BE PROVIDED BY OTHERS.

SYMBOLS

W	WALL-MOUNTED WALLPHONE; (1) CATEGORY 6A CABLE TERMINATED ON NETWORK (RACK) PATCH PANEL IN TR; (1) 5" x 5" x 2-1/2" DEEP, FLUSH MOUNTED BACK BOX FITTED WITH SINGLE GANG REDUCER RING WITH (1) 1-1/4" CONDUIT STUBBED TO ABOVE ACCESSIBLE CEILING OR DIRECTLY TO LOCAL TR WHERE ACESSIBLE CEILING IS NOT AVAILABLE; MOUNT 4'-6" AFF UON; PROVIDE (1) CATEGORY 6A PLENUM RATED PATCH CORD PER JACK FOR BETWEEN JACK AND NETWORK SWITCH IN TR, PATCH CORD COLOR TO MATCH JACK COLOR
2	WALL-MOUNTED WAO; (2) CATEGORY 6A CABLES TERMINATED ON NETWORK (RACK) PATCH PANEL; (1) 5" x 5" x 2-1/2" DEEP, FLUSH MOUNTED BACK BOX FITTED WITH SINGLE GANG REDUCER RING WITH (1) 1-1/4" CONDUIT STUBBED TO ABOVE ACCESSIBLE CEILING OR DIRECTLY TO LOCAL TR WHERE ACESSIBLE CEILING IS NOT AVAILABLE; MOUNT 18" AFF UON; PROVIDE (2) 6' CATEGORY 6A PATCH CORD AT WAO FOR DEVICE AND (2) CATEGORY 6A PATCH CORD AT NETWORK SWITCH IN TR PER JACK, COLOR OF PATCH CORDS TO MATCH JACK COLOR
4	WALL-MOUNTED WAO; (4) CATEGORY 6A CABLES TERMINATED ON NETWORK (RACK) PATCH PANEL; (1) 5" x 5" x 2-1/2" DEEP, FLUSH MOUNTED BACK BOX FITTED WITH SINGLE GANG REDUCER RING WITH (1) 1-1/4" CONDUIT STUBBED TO ABOVE ACCESSIBLE CEILING OR DIRECTLY TO LOCAL TR WHERE ACESSIBLE CEILING IS NOT AVAILABLE; MOUNT 18" AFF UON; PROVIDE (4) 6' CATEGORY 6A PATCH CORD AT WAO FOR DEVICE & (4) CATEGORY 6A PATCH CORD AT NETWORK SWITCH IN TR PER JACK, COLOR OF PATCH CORDS TO MATCH JACK COLOR
2	FLOOR BOX-MOUNTED WAO; (2) CATEGORY 6A CABLES TERMINATED ON NETWORK (RACK) PATCH PANEL IN TR; (1) 5" x 5" x 2-1/2" DEEP, FLUSH MOUNTED BACK BOX FITTED WITH SINGLE GANG REDUCER RING WITH (1) 1-1/4" CONDUIT STUBBED TO ABOVE ACCESSIBLE CEILING OR DIRECTLY TO LOCAL TR WHERE ACESSIBLE CEILING IS NOT AVAILABLE; MOUNT 18" AFF UON; PROVIDE (2) 6' CATEGORY 6A PATCH CORD AT WAO FOR DEVICE AND (2) CATEGORY 6A PATCH CORD AND NETWORK SWITCH IN TR PER JACK, COLOR OF PATCH CORDS TO MATCH JACK COLOR
4	FLOOR BOX-MOUNTED WAO; (4) CATEGORY 6A CABLES TERMINATED ON NETWORK (RACK) PATCH PANEL IN TR; (1) 5" x 5" x 2-1/2" DEEP, FLUSH MOUNTED BACK BOX FITTED WITH SINGLE GANG REDUCER RING WITH (1) 1-1/4" CONDUIT STUBBED TO ABOVE ACCESSIBLE CEILING OR DIRECTLY TO LOCAL TR WHERE ACESSIBLE CEILING IS NOT AVAILABLE; MOUNT 18" AFF UON; PROVIDE (4) 6' CATEGORY 6A PATCH CORD AT WAO FOR DEVICE AND (4) CATEGORY 6A PATCH CORD AND NETWORK SWITCH IN TR PER JACK, COLOR OF PATCH CORDS TO MATCH JACK COLOR
WAP	CEILING-MOUNTED WIRELESS ACCESS POINT WAO; (2) CATEGORY 6A CABLES TERMINATED ON WIRELESS ACCESS POINT PATCH PANEL IN TR AND TERMINATED IN A SURFACE-MOUNT BOX ON DEVICE END WITH (1) 1-1/4" CONDUIT TO LOCAL TR WHERE ACESSIBLE CEILING IS NOT AVAILABLE; COORDINATE CABLE TERMINATIONS WITH EXACT WAP LOCATION AND INSTALLATION; PROVIDE (2) 25' CATEGORY 6A PATCH CORD AT WAO FOR DEVICE AND (2) CATEGORY 6A PATCH CORD FOR BETWEEN JACK AND NETWORK SWITCH IN TR PER JACK, COLOR OF PATCH CORDS TO MATCH JACK COLOR
TV3	WALL-MOUNTED CATV OUTLET; (2) CATEGORY 6A CABLES TERMINATED ON NETWORK (RACK) PATCH PANEL AND (1) RG-6 COAX CABLES; (1) 5" x 5" x 2-1/2" DEEP, FLUSH MOUNTED BACK BOX FITTED WITH SINGLE GANG REDUCER RING WITH (1) 1-1/4" CONDUIT STUBBED TO ABOVE ACCESSIBLE CEILING OR DIRECTLY TO LOCAL TR WHERE ACESSIBLE CEILING IS NOT AVAILABLE; MOUNT 60" AFF UON; PROVIDE (2) 6' CATEGORY 6A PATCH CORD & (1) RG-6 COAX CABLES TO TV DISPLAY AND (2) CATEGORY 6A PATCH CORD AND NETWORK SWITCH IN TR AND (1) RG-6 PATCH CABLE TO COAX PATCH PANEL PER JACK, COLOR OF PATCH CORDS TO MATCH JACK COLOR. FIELD VERIFY HEIGHTS. COORDINATE OUTLETS WITH ELECRICAL OUTLET HEIGHT.
2	CEILING-MOUNTED PROJECTOR OUTLET. (2) CATEGORY 6A CABLES TERMINATED ON NETWORK (RACK) PATCH PANEL IN TR AND TERMINATED IN A SURFACE-MOUNTED BOX AT DEVICE END WITH A 1 ½" CONDUIT STUBBED TO LOCAL TR WHERE ACCESSIBLE CEILING IS NOT AVAILABLE. COORDINATE CABLE TERMINATIONS WITH EXACT LOCATION AND INSTALLATION.
R	WALL-MOUNTED RADIO COMMUNCATIONS OUTLET. (1) RG-6 50 OHM COAXIAL CABLE N-FEMALE TERMINATION. (1) 5" X 5" X 2-1/2" DEEP, FLUSH MOUNTED BACK BOX FITTED WITH (1) 1-1/4" CONDUIT STUBBED TO ABOVE ACCESSIBLE CEILING. MOUNT 18" ABOVE FINISHED FLOOR.

24" WIDE LADDER TYPE CABLE TRAY

BASKET TYPE CABLE TRAY, 18" WIDE BY 4" DEEP

CONDUIT ROUTE, 4" DIA UON.

PULL BOX, SIZED PER LATEST TIA 569.

8'H X 4'W X 3/4" THICK A/C GRADE FIRE RATED PLYWOOD MOUNTED 1' AFF

N

AECOM

PROJECT

NEW SECURITY FORCES BUILDING

PAYNE BLVD.
CHARLOTTE, NORTH CAROLINA 28208

PAYNE BLVD
CHARLOTTE, NORTH CAROLINA 28208

CLIENT

NORTH CAROLINA AIR NATIONAL GAURD - 145TH AIRLIFT WING

145th AIRLIFT WING
4930 MINUTEMAN WAY
CHARLOTTE, NORTH CAROLINA 28208

ARCHITECT/DESIGNER

AECOM

277 W NATIONWIDE BLVD
COLUMBUS, OH 43215
614-464-4500

www.aecom.com

CONSULTANTS

REGISTRATION

REGISTERED COMMUNICATIONS DISTRIBUTION DESIGNER
Bicsi
P Joie Koenders
BICSI ID # 118551
Expires 12-31-26
RCDD

Signature

05/30/2025

KEY PLAN

ISSUE/REVISION

I/R	DATE	DESCRIPTION
2	05/30/2025	B-3 SUBMITTAL - FINAL
1	03/14/2025	B-2 SUBMITTAL
	09/29/2023	B-1 SUBMITTAL
	09/15/23	B-1 SUBMITTAL

PROJECT NUMBER

60637899
FJRP229030

SHEET TITLE

TELECOMMUNICATIONS LEGEND. ABBREVIATIONS AND SYMBOLS

SHEET NUMBER

T001

©2023 AECOM Corporation

Last Plotted: 5/23/2025 12:33:31 PM
Filename: BM.360-BP-ABNER (USA) 60637899-SFNCANG145th63rf399_SF-NC_ANG_R21_7.rvt

Printed on ___% Post-Consumer Recycled Content Paper

16-TELECOM-16.10-T101-TELECOMMUNICATIONS FIRST FLOOR PLAN
Project Management Initials: MR Designer: Designer Checked: Checker Approved: Approver/ARCH E1 30"x42"

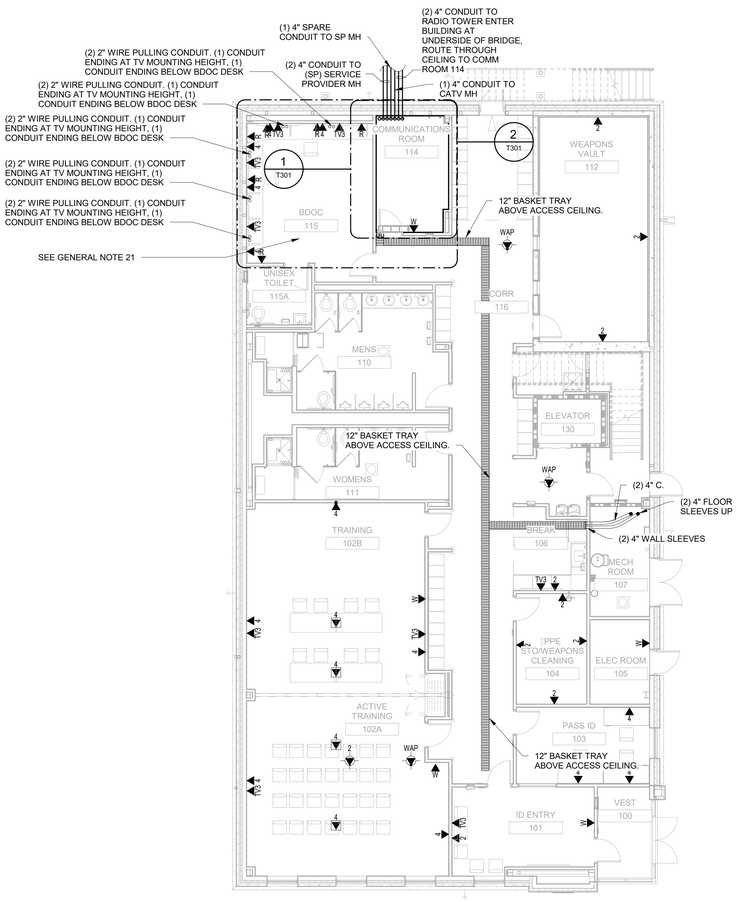

1 T101 **01 FIRST FLOOR**
Scale: 1/8" = 1'-0"

GENERAL NOTES

1. THE DRAWINGS ARE DIAGRAMMATIC ONLY AND MAY NOT SHOW ALL COMPONENTS, MATERIALS, OFFSETS, BENDS, ELBOWS AND OTHER SPECIFIC ELEMENTS THAT MAY BE REQUIRED FOR A COMPLETE INSTALLATION. THE CONTRACTOR SHALL BE RESPONSIBLE FOR PROVIDING MATERIALS NEEDED FOR A COMPLETE AND FUNCTIONAL INSTALLATION.

2. PRIOR TO INSTALLATION OF DEVICES, FIELD-VERIFY DEVICE LOCATIONS WITH DUE REGARD TO AS-BUILT CONDITIONS, COORDINATION WITH THE WORK OF OTHER TRADES AND MANUFACTURER'S RECOMMENDATIONS.

3. CONDUIT BENDS SHALL BE SWEEPS TO MAINTAIN PROPER CABLE BEND RADIUS. CONDUITS SHALL BE DEBURRED, HAVE 200LB PULLSTRINGS AND BUSHINGS INSTALLED. CABLE SHALL NOT BE PLACED INTO CONDUITS OR SLEEVES WITHOUT FIRST DEBURRING AND INSTALLING BUSHINGS.

4. CONDUIT STUB-OUTS SHALL BE EXTENDED TO NEAREST ACCESSIBLE CEILING SPACE FOR ROOMS WITH HARD CEILINGS, CONDUIT SHALL BE ROUTED TO ADJOINING CORRIDOR IN COMMON WITH A ROOM DOOR. CONDUITS SHALL NOT PASS THROUGH OTHER ROOMS TO REACH A CORRIDOR, UNLESS THE ROOM IS COMPLETELY SURROUNDED BY OTHER ROOMS OR SPACES (E.G., ELEVATORS AND INACCESSIBLE CHASES).

5. PULL BOXES AND JUNCTION BOXES SHALL BE PROVIDED PER LOCAL CODES AND STANDARDS TO FACILITATE THE EASE IN PULLING OF FUTURE CABLING. AT A MINIMUM, PROVIDE ONE (1) PULL BOX FOR EVERY 100 FEET OF STRAIGHT CONDUIT RUN, AND ONE (1) PULL BOX AFTER TWO (2) 90-DEGREE BENDS.

6. ROUTING OF CONDUIT SHOWN FOR DESIGN INTENT ONLY. COORDINATE EXACT ROUTE BASED ON FIELD CONDITIONS.

7. CABLES WITHIN CABLE TRAY SHALL BE PLACED IN A RANDOM FASHION WITHOUT BUNDLING THE CABLES. CABLE TIES SHALL NOT BE USED.

8. CABLES SHALL EXIT CABLE TRAY BY MEANS OF CABLE TRAY RADIUS DROP (I.E., WATERFALL).

9. CABLES SHALL BE SUPPORTED FROM THE BUILDING STRUCTURE BY APPROVED J-HOOKS OR SLINGS WHEN NOT IN CONDUIT OR COMMON LOW VOLTAGE CABLE TRAY. CABLES TRANSITIONING FROM CABLE TRAY TO CONDUIT SPANNING MORE THAN 3 FEET SHALL BE SUPPORTED.

10. WORK AREA OUTLET CONDUIT SHALL BE A MINIMUM OF 1 TRADE SIZE EMT, UNLESS OTHERWISE NOTED.

11. SINGLE GANG PLASTER REDUCING RINGS SHALL BE PROVIDED WITH DOUBLE-GANG BACKBOXES, UNLESS OTHERWISE NOTED.

12. HORIZONTAL CABLE SHALL BE PLENUM RATED.

13. PROVIDE BLANK PLATES FOR BOXES LEFT EMPTY OR DENOTED AS "BLANK" FOR FUTURE INSTALLATIONS.

14. NOTES FOR CABLE, FACEPLATE AND JACK COLORS.

15. PRIOR TO ORDER, SUBMIT FACEPLATE, JACK, AND DEVICE COLOR SAMPLES TO ARCHITECT FOR REVIEW.

16. REFER TO ARCHITECTURAL DRAWINGS AND SPECIFICATIONS FOR PROPER OUTLET MOUNTING HEIGHTS AND LOCATIONS PRIOR TO ROUGH-IN.

17. REFER TO ELECTRICAL DRAWINGS AND SPECIFICATIONS FOR POWER CONDUITS, CIRCUITS, RECEPTACLES, CABLES, ETC.

18. REFER TO STRUCTURAL DRAWINGS AND SPECIFICATIONS FOR DIMENSIONED CORE HOLE PENETRATIONS.

19. REFER TO LIFE SAFETY DRAWINGS FOR FIRE & SMOKE WALL LOCATIONS. CONDUIT PENETRATIONS SHALL BE PROPERLY FIRESTOPPED PER CODE. CABLE TRAY SHALL NOT PENETRATE FIRE & SMOKE WALLS. LISTED FIRESTOP ASSEMBLIES SHALL BE USED TO PENETRATE FIRE & SMOKE WALLS FOR CABLE TRAY PATHWAYS.

20. REFER TO ELECTRICAL DRAWINGS FOR THE CONDUIT AND BACKBOXES FOR THE ESS AND ADVANTOR SYSTEMS. EQUIPMENT AND CABLING INFRASTRUCTURE TO BE PROVIDED BY OTHERS.

21. ROOM 115 BDOC - ADVANTOR SYSTEM EQUIPMENT AND RACK TO BE PROVIDED BY OTHERS.

22. (2) 4" CONDUITS FROM RADIO TOWER ENTER BUILDING AT END OF BRIDGE AT SECOND FLOOR. CONDUITS ROUTE THROUGH THE CEILING INTO THE FIRST FLOOR COMM ROOM.

N

AECOM

PROJECT

NEW SECURITY FORCES BUILDING

PAYNE BLVD.
CHARLOTTE, NORTH CAROLINA 28208

PAYNE BLVD
CHARLOTTE, NORTH CAROLINA 28208

CLIENT

NORTH CAROLINA AIR NATIONAL GAURD - 145TH AIRLIFT WING

145th AIRLIFT WING
4930 MINUTEMAN WAY
CHARLOTTE, NORTH CAROLINA 28208

ARCHITECT/DESIGNER

AECOM

277 W NATIONWIDE BLVD
COLUMBUS, OH 43215
614-464-4500

www.aecom.com

CONSULTANTS

REGISTRATION

REGISTERED COMMUNICATIONS DISTRIBUTION DESIGNER
Bicsi
P Joie Koenders
BICSI ID # 118551
Expires 12-31-26
RCDD

Signature

05/30/2025

KEY PLAN

ISSUE/REVISION

I/R	DATE	DESCRIPTION
2	05/30/2025	B-3 SUBMITTAL - FINAL
1	03/14/2025	B-2 SUBMITTAL
	09/29/2023	B-1 SUBMITTAL
	09/15/23	B-1 SUBMITTAL

PROJECT NUMBER

60637899
FJRP229030

SHEET TITLE

TELECOMMUNICATIONS FIRST FLOOR PLAN

SHEET NUMBER

T101

Last Plotted: 5/23/2025 12:33:33 PM
Filename: BM.360-BP-A4BER (USA) 60637899-SFNCANG1459063799_SFNC_ANG_R21_T.rvt

Printed on ___% Post-Consumer Recycled Content Paper

©2023 AECOM Corporation

16-TELECOM-16.10-T102-TELECOMMUNICATIONS SECOND FLOOR PLAN
Project Management Initials: MR Designer: Designer Checker: Checker Approved: Approver ARCH E1 30"x42"

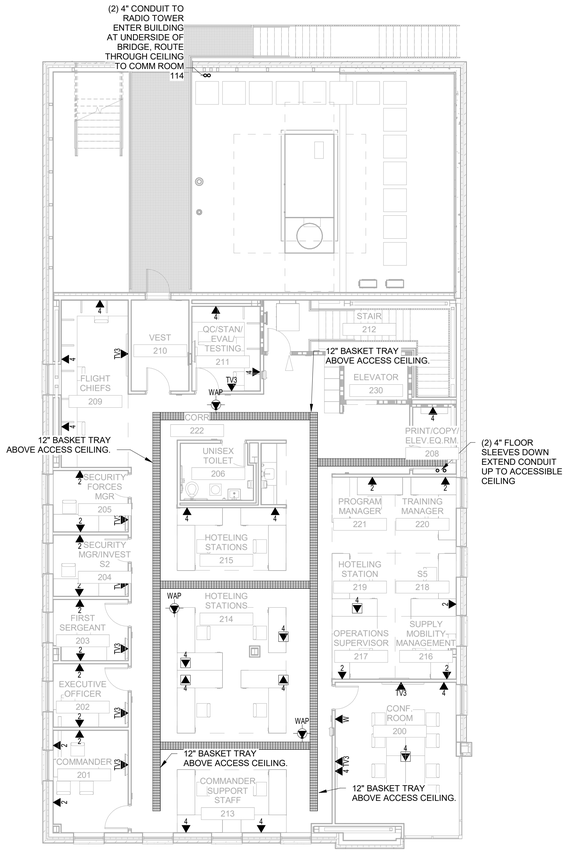

1
T102

02 SECOND FLOOR
Scale: 1/8" = 1'-0"

GENERAL NOTES

1. THE DRAWINGS ARE DIAGRAMMATIC ONLY AND MAY NOT SHOW ALL COMPONENTS, MATERIALS, OFFSETS, BENDS, ELBOWS AND OTHER SPECIFIC ELEMENTS THAT MAY BE REQUIRED FOR A COMPLETE INSTALLATION. THE CONTRACTOR SHALL BE RESPONSIBLE FOR PROVIDING MATERIALS NEEDED FOR A COMPLETE AND FUNCTIONAL INSTALLATION.
2. PRIOR TO INSTALLATION OF DEVICES, FIELD-VERIFY DEVICE LOCATIONS WITH DUE REGARD TO AS-BUILT CONDITIONS, COORDINATION WITH THE WORK OF OTHER TRADES AND MANUFACTURER'S RECOMMENDATIONS.
3. CONDUIT BENDS SHALL BE SWEEPS TO MAINTAIN PROPER CABLE BEND RADIUS. CONDUITS SHALL BE DEBURRED, HAVE 200LB PULLSTRINGS AND BUSHINGS INSTALLED. CABLE SHALL NOT BE PLACED INTO CONDUITS OR SLEEVES WITHOUT FIRST DEBURRING AND INSTALLING BUSHINGS.
4. CONDUIT STUB-OUTS SHALL BE EXTENDED TO NEAREST ACCESSIBLE CEILING SPACE. FOR ROOMS WITH HARD CEILINGS, CONDUIT SHALL BE ROUTED TO ADJOINING CORRIDOR IN COMMON WITH A ROOM DOOR. CONDUITS SHALL NOT PASS THROUGH OTHER ROOMS TO REACH A CORRIDOR, UNLESS THE ROOM IS COMPLETELY SURROUNDED BY OTHER ROOMS OR SPACES (E.G., ELEVATORS AND INACCESSIBLE CHASES).
5. PULL BOXES AND JUNCTION BOXES SHALL BE PROVIDED PER LOCAL CODES AND STANDARDS TO FACILITATE THE EASE IN PULLING OF FUTURE CABLING. AT A MINIMUM, PROVIDE ONE (1) PULL BOX FOR EVERY 100 FEET OF STRAIGHT CONDUIT RUN, AND ONE (1) PULL BOX AFTER TWO (2) 90-DEGREE BENDS.
6. ROUTING OF CONDUIT SHOWN FOR DESIGN INTENT ONLY. COORDINATE EXACT ROUTE BASED ON FIELD CONDITIONS.
7. CABLES WITHIN CABLE TRAY SHALL BE PLACED IN A RANDOM FASHION WITHOUT BUNDLING THE CABLES. CABLE TIES SHALL NOT BE USED.
8. CABLES SHALL EXIT CABLE TRAY BY MEANS OF CABLE TRAY RADIUS DROP (I.E., WATERFALL).
9. CABLES SHALL BE SUPPORTED FROM THE BUILDING STRUCTURE BY APPROVED J-HOOKS OR SLINGS WHEN NOT IN CONDUIT OR COMMON LOW VOLTAGE CABLE TRAY. CABLES TRANSITIONING FROM CABLE TRAY TO CONDUIT SPANNING MORE THAN 3 FEET SHALL BE SUPPORTED.
10. WORK AREA OUTLET CONDUIT SHALL BE A MINIMUM OF 1 TRADE SIZE EMT, UNLESS OTHERWISE NOTED.
11. SINGLE GANG PLASTER REDUCING RINGS SHALL BE PROVIDED WITH DOUBLE-GANG BACKBOXES, UNLESS OTHERWISE NOTED.
12. HORIZONTAL CABLE SHALL BE PLENUM RATED.
13. PROVIDE BLANK PLATES FOR BOXES LEFT EMPTY OR DENOTED AS "BLANK" FOR FUTURE INSTALLATIONS.
14. NOTES FOR CABLE, FACEPLATE AND JACK COLORS.
15. PRIOR TO ORDER, SUBMIT FACEPLATE, JACK, AND DEVICE COLOR SAMPLES TO ARCHITECT FOR REVIEW.
16. REFER TO ARCHITECTURAL DRAWINGS AND SPECIFICATIONS FOR PROPER OUTLET MOUNTING HEIGHTS AND LOCATIONS PRIOR TO ROUGH-IN.
17. REFER TO ELECTRICAL DRAWINGS AND SPECIFICATIONS FOR POWER CONDUITS, CIRCUITS, RECEPTACLES, CABLES, ETC.
18. REFER TO STRUCTURAL DRAWINGS AND SPECIFICATIONS FOR DIMENSIONED CORE HOLE PENETRATIONS.
19. REFER TO LIFE SAFETY DRAWINGS FOR FIRE & SMOKE WALL LOCATIONS. CONDUIT PENETRATIONS SHALL BE PROPERLY FIRESTOPPED PER CODE. CABLE TRAY SHALL NOT PENETRATE FIRE & SMOKE WALLS. LISTED FIRESTOP ASSEMBLIES SHALL BE USED TO PENETRATE FIRE & SMOKE WALLS FOR CABLE TRAY PATHWAYS.
20. REFER TO ELECTRICAL DRAWINGS FOR THE CONDUIT AND BACKBOXES FOR THE ESS AND ADVANTOR SYSTEMS. EQUIPMENT AND CABLING INFRASTRUCTURE TO BE PROVIDED BY OTHERS.
21. ROOM 115 BDOC - ADVANTOR SYSTEM EQUIPMENT AND RACK TO BE PROVIDED BY OTHERS.
22. (2) 4" CONDUITS FROM RADIO TOWER ENTER BUILDING AT END OF BRIDGE AT SECOND FLOOR. CONDUITS ROUTE THROUGH THE CEILING INTO THE FIRST FLOOR COMM ROOM.

AECOM

PROJECT

NEW SECURITY FORCES BUILDING

PAYNE BLVD.
CHARLOTTE, NORTH CAROLINA 28208

PAYNE BLVD
CHARLOTTE, NORTH CAROLINA 28208

CLIENT

NORTH CAROLINA AIR NATIONAL GAURD - 145TH AIRLIFT WING

145th AIRLIFT WING
4930 MINUTEMAN WAY
CHARLOTTE, NORTH CAROLINA 28208

ARCHITECT/DESIGNER

AECOM

277 W NATIONWIDE BLVD
COLUMBUS, OH 43215
614-464-4500

www.aecom.com

CONSULTANTS

REGISTRATION

REGISTERED COMMUNICATIONS DISTRIBUTION DESIGNER
Bicsi
P Joie Koenders
BICSI ID # 118551
Expires 12-31-26
RCDD

Signature

05/30/2025

KEY PLAN

ISSUE/REVISION

I/R	DATE	DESCRIPTION
2	05/30/2025	B-3 SUBMITTAL - FINAL
1	03/14/2025	B-2 SUBMITTAL
	09/29/2023	B-1 SUBMITTAL
	09/15/23	B-1 SUBMITTAL

PROJECT NUMBER

60637899
FJRP229030

SHEET TITLE

TELECOMMUNICATIONS SECOND FLOOR PLAN

SHEET NUMBER

T102

N

Last Plotted: 5/23/2025 12:33:34 PM
Filename: BM.360-SP-A2MER1(USA) (60637899-SFNCANG1459083799_SF-NC_AND_R31_T.rvt

Printed on ____% Post-Consumer Recycled Content Paper

©2023 AECOM Corporation

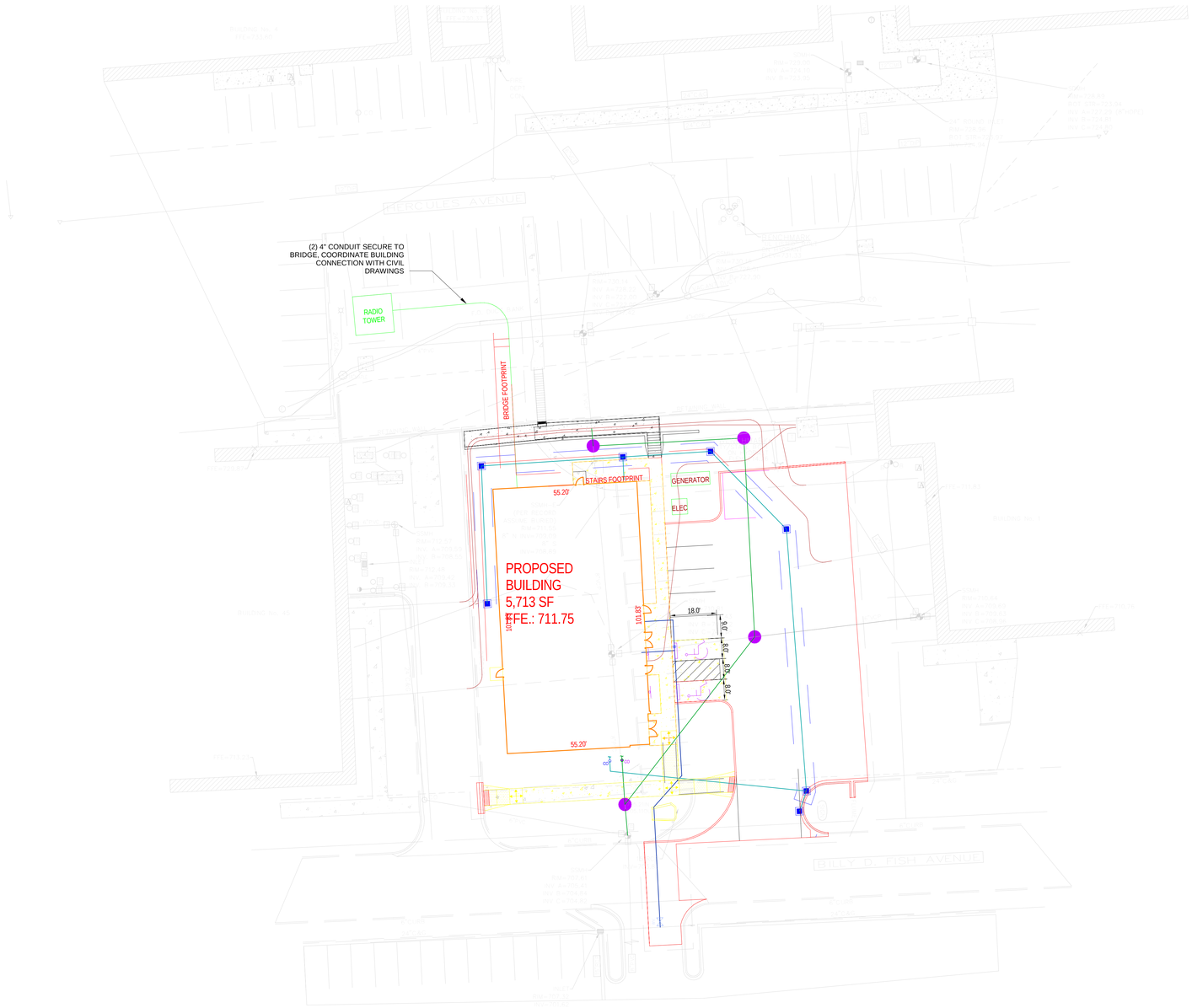

1 | T201

TELE SITE PLAN

Scale: 1" = 20'-0"

GENERAL NOTES

1. COORDINATE ALL EXISTING COMM CONDUIT PATHWAYS WITH CIVIL UTILITY DRAWINGS. ADDITIONAL COORDINATION WITH THE SITE WILL BE REQUIRED FOR ACTUAL MANHOLE AND PATHWAY.
2. COORDINATE NEW UGT PATHWAY FROM RADIO TOWER TO BUILDING VIA BRIDGE WITH CIVIL UTILIY DRAWINGS.

AECOM

PROJECT

NEW SECURITY FORCES BUILDING

PAYNE BLVD.
CHARLOTTE, NORTH CAROLINA 28208

PAYNE BLVD
CHARLOTTE, NORTH CAROLINA 28208

CLIENT

NORTH CAROLINA AIR NATIONAL GAURD - 145TH AIRLIFT WING

145th AIRLIFT WING
4930 MINUTEMAN WAY
CHARLOTTE, NORTH CAROLINA 28208

ARCHITECT/DESIGNER

AECOM

277 W NATIONWIDE BLVD
COLUMBUS, OH 43215
614-464-4500

www.aecom.com

CONSULTANTS

REGISTRATION

REGISTERED COMMUNICATIONS DISTRIBUTION DESIGNER
Bicsi
P Joie Koenders
BICSI ID # 118551
Expires 12-31-26
RCDD

Signature

05/30/2025

KEY PLAN

ISSUE/REVISION

I/R	DATE	DESCRIPTION
1	05/30/2025	B-3 SUBMITTAL - FINAL
	05/19/25	B-1 SUBMITTAL

PROJECT NUMBER

60637899
FJRP229030

SHEET TITLE

TELECOMMUNICATIONS SITE PLAN

SHEET NUMBER

T201

N

This drawing has been prepared for the use of AECOM's client and may not be used, reproduced or relied upon by third parties, except as agreed by AECOM and its client, as required by law or for use by governmental reviewing agencies. AECOM accepts no responsibility, and denies any liability whatsoever, to any party that modifies this drawing without AECOM's express written consent. Do not scale this document. All measurements must be obtained from the stated dimensions.

©2023 AECOM Corporation

Project Management Initials: MR Designer: Designer Checked: Checker Approved: Approver/ARCH E1 30"x42"
Last Plotted: 5/28/2025 8:09:58 AM
Filename: \\ad.aecom.com\ftp\Anon\USA\60637899-SFNCANG145thSBG37899_SF-NC_ANG_R21_T.rvt
Printed on ___% Post-Consumer Recycled Content Paper

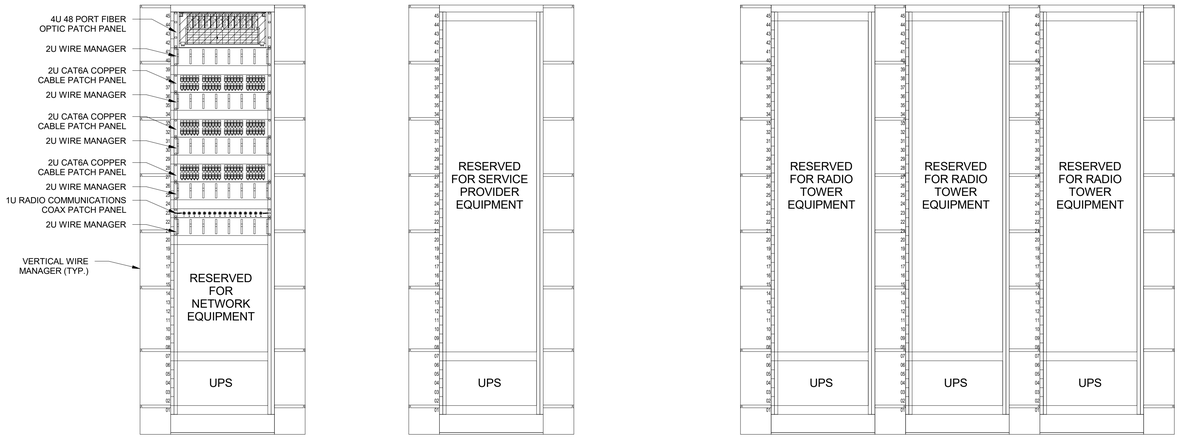

3 T301 **RACK ELEVATIONS**
Scale: 1" = 1'-0"

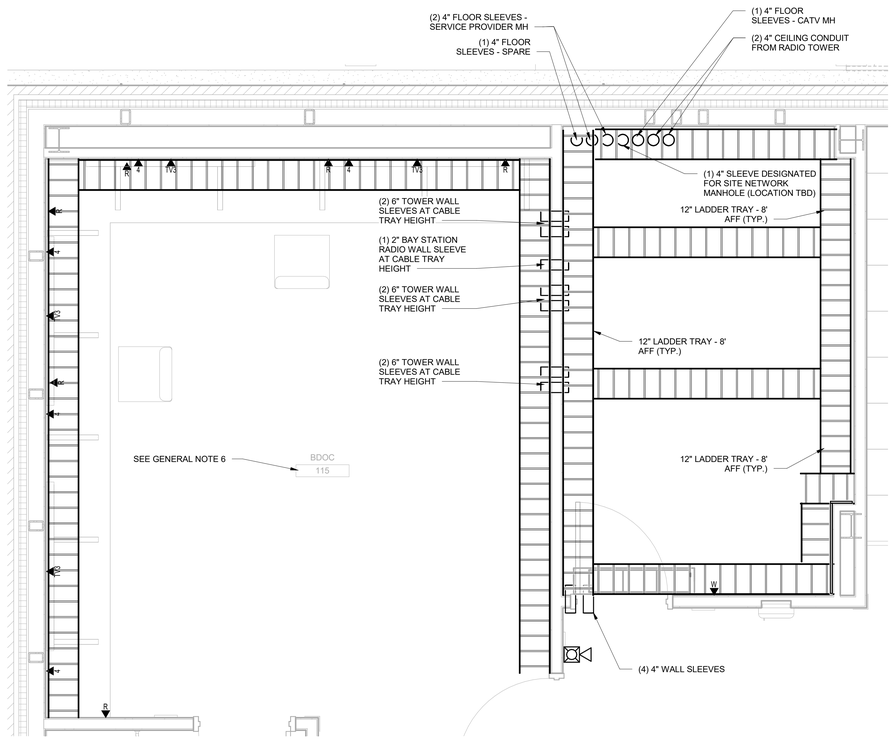

2 T301 **01 FIRST FLOOR - BDOC ROOM 115 & COMM ROOM 114 PATHWAY**
Scale: 1/2" = 1'-0"

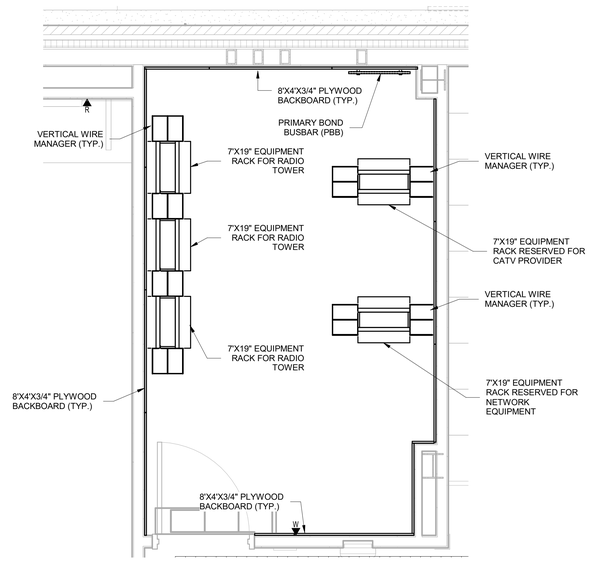

1 T301 **01 FIRST FLOOR - COMMUNICATION ROOM 114**
Scale: 1/2" = 1'-0"

GENERAL NOTES

1. ROUTE CABLE WITHIN THE CABLE TRAY SUCH AS TO PROVIDE 10 FEET OF MINIMAL SERVICE LOOP WITHOUT FORMING COILS IN THE TRAY. CIRCLE THE ROOM FROM THE POINT OF ENTRANCE BEFORE DROPPING TO THE RACKS OR WALL FIELD.
2. PROVIDE 4 FOOT WIDE, BY 8 FOOT HIGH, BY 3/4 INCH THICK, A/C-GRADE OR BETTER, VOID-FREE PLYWOOD, BACK BOARDS, PER LOCAL FIRE CODES. PAINT BOTH SIDES AND EDGES WITH TWO COATS OF INTUMESCENT PAINT. MOUNT WITH WALL ANCHORS AT 2 FOOT INTERVALS AROUND BOARD PERIMETER WITH NO ANCHORS MORE THAN 6 INCHES FROM THE BOARD EDGE. COUNTER-SINK BOLT HEADS TO BELOW FACE OF BOARD. MOUNT 8 INCHES AFF TO BOTTOM EDGE, UNLESS OTHERWISE NOTED.
3. BONDING CONDUCTORS SHALL BE CONTINUOUS FROM PBB TO MOST DISTANT TECHNOLOGY ROOM. SPLICES WITHIN THE TBB ARE ALLOWED IF REQUIRED CONDUCTOR LENGTHS ARE TOO EXCESSIVE FOR AVAILABLE SPOOL SIZES. SPLICES OF TBB SHALL BE STRAIGHT SPLICES WITH EXOTHERMIC WELDS. BUSBARS SHALL CONNECT TO A TBB USING ADDITIONAL CONDUCTORS (I.E., PIGTAILS) FROM A TBB TO SBB. PIGTAILS SHALL BE OF THE SAME SIZE AS THE TBB.
4. DO NOT CONNECT BONDING CONDUCTORS FOR TELECOMMUNICATIONS TO VERTICAL STRUCTURAL STEEL USED AS LIGHTNING DOWN CONDUCTORS. EXTEND CONDUCTORS AS REQUIRED TO MAINTAIN 20 FEET OF HORIZONTAL CLEARANCE FROM ANY LIGHTNING DOWN CONDUCTOR STRUCTURE STEEL COLUMNS AND TELECOMMUNICATIONS GROUND CONDUCTOR BONDS TO STRUCTURAL STEEL.
5. ROUTE TBB TO MINIMIZE TOTAL LENGTH. TBB SHALL BE INSTALLED USING THE BROADEST SWEEPS POSSIBLE. CABLE SHALL BE INSTALLED WITH MINIMUM NUMBER OF BENDS.
6. ROOM 115 BDOC - ADVANTOR SYSTEM EQUIPMENT AND RACK TO BE PROVIDED BY OTHERS. CLIENT TO PROVIDE ADDITIONAL DETAIL ON CABINET SIZE AND LOCATION

AECOM

PROJECT

NEW SECURITY FORCES BUILDING

PAYNE BLVD.
CHARLOTTE, NORTH CAROLINA 28208

PAYNE BLVD
CHARLOTTE, NORTH CAROLINA 28208

CLIENT

NORTH CAROLINA AIR NATIONAL GAURD - 145TH AIRLIFT WING

145th AIRLIFT WING
4930 MINUTEMAN WAY
CHARLOTTE, NORTH CAROLINA 28208

ARCHITECT/DESIGNER

AECOM

277 W NATIONWIDE BLVD
COLUMBUS, OH 43215
614-464-4500

www.aecom.com

CONSULTANTS

REGISTRATION

REGISTERED COMMUNICATIONS DISTRIBUTION DESIGNER
Bicsi
P Joie Koenders
BICSI ID # 118551
Expires 12-31-26
RCDD

Signature

05/30/2025

KEY PLAN

ISSUE/REVISION

I/R	DATE	DESCRIPTION
2	05/30/2025	B-3 SUBMITTAL - FINAL
1	03/14/2025	B-2 SUBMITTAL
	09/29/2023	B-1 SUBMITTAL
	09/15/23	B-1 SUBMITTAL

PROJECT NUMBER

60637899
FJRP229030

SHEET TITLE

ENLARGED COMMUNICATIONS ROOM FLOOR PLAN

SHEET NUMBER

T301

N

©2023 AECOM Corporation

Printed on ____% Post-Consumer Recycled Content Paper

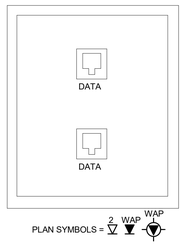

STANDARD DATA ONLY OUTLET

NO SCALE

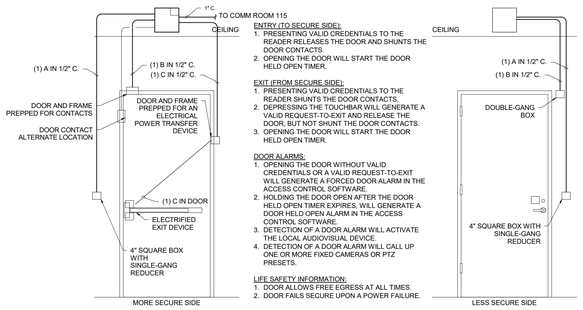

ENTRY (TO SECURE SIDE):
1. PRESENTING VALID CREDENTIALS TO THE READER RELEASES THE DOOR AND SHUNTS THE DOOR CONTACTS.
2. OPENING THE DOOR WILL START THE DOOR HELD OPEN TIMER.

EXIT (FROM SECURE SIDE):
1. PRESENTING VALID CREDENTIALS TO THE READER SHUNTS THE DOOR CONTACTS.
2. DEPRESSING THE TOUCHBAR WILL GENERATE A VALID REQUEST-TO-EXIT AND RELEASE THE DOOR, BUT NOT SHUNT THE DOOR CONTACTS.
3. OPENING THE DOOR WILL START THE DOOR HELD OPEN TIMER.

DOOR ALARMS:
1. OPENING THE DOOR WITHOUT VALID CREDENTIALS OR A VALID REQUEST-TO-EXIT WILL GENERATE A FORCED DOOR ALARM IN THE ACCESS CONTROL SOFTWARE.
2. HOLDING THE DOOR OPEN AFTER THE DOOR HELD OPEN TIMER EXPIRES, WILL GENERATE A DOOR HELD OPEN ALARM IN THE ACCESS CONTROL SOFTWARE.
3. DETECTION OF A DOOR ALARM WILL ACTIVATE THE LOCAL AUDIOVISUAL DEVICE.
4. DETECTION OF A DOOR ALARM WILL CALL UP ONE OR MORE FIXED CAMERAS OR PTZ PRESETS.

LIFE SAFETY INFORMATION:
1. DOOR ALLOWS FREE EGRESS AT ALL TIMES.
2. DOOR FAILS SECURE UPON A POWER FAILURE.

STANDARD SECURITY DOOR

NO SCALE

STANDARD VOICE ONLY OUTLET

NO SCALE

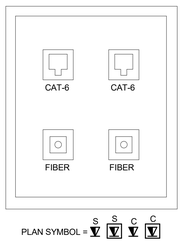

STANDARD STATE/COUNTY DATA OUTLET

NO SCALE

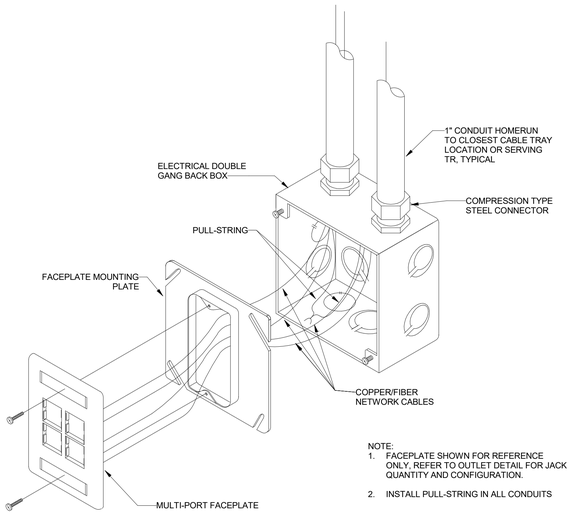

NOTE:
1. FACEPLATE SHOWN FOR REFERENCE ONLY. REFER TO OUTLET DETAIL FOR JACK QUANTITY AND CONFIGURATION.
2. INSTALL PULL-STRING IN ALL CONDUITS

NETWORK OUTLET

NO SCALE

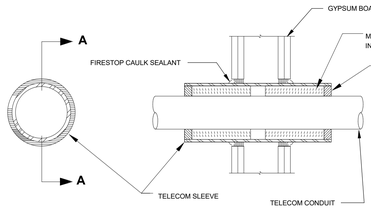

NOTES:
1. ALL FIRESTOP SYSTEMS WILL BE UL CLASSIFIED TO ASTM E814 (UL 1479).
2. SEAL ALL PATHWAYS THROUGH FIRE-RATED PARTITIONS.
3. USE FIRESTOP SYSTEM THAT IS EQUAL OR GREATER THAN THE PENETRATED WALL FIRE RATING.
4. USE APPROPRIATE FIRESTOP SYSTEMS DESIGNATED FOR THE PENETRATION.
5. PRECISELY FOLLOW MANUFACTURERS INSTALLATION DETAILS.

TYPICAL SLEEVE/CONDUIT FIRESTOP DETAIL

NO SCALE

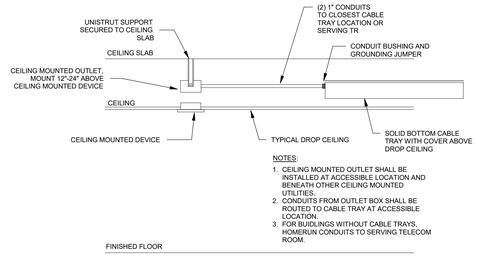

NOTES:
1. CEILING MOUNTED OUTLET SHALL BE INSTALLED AT ACCESSIBLE LOCATION AND BENEATH OTHER CEILING MOUNTED UTILITIES.
2. CONDUITS FROM OUTLET BOX SHALL BE ROUTED TO CABLE TRAY AT ACCESSIBLE LOCATION.
3. FOR BUIDLINGS WITHOUT CABLE TRAYS, HOMERUN CONDUITS TO SERVING TELECOM ROOM.

TYPICAL CEILING MOUNTED OUTLET DETAIL

NO SCALE

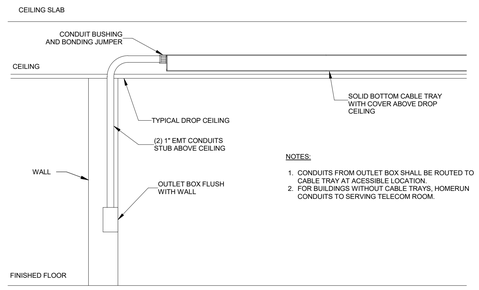

NOTES:
1. CONDUITS FROM OUTLET BOX SHALL BE ROUTED TO CABLE TRAY AT ACESSIBLE LOCATION.
2. FOR BUILDINGS WITHOUT CABLE TRAYS, HOMERUN CONDUITS TO SERVING TELECOM ROOM.

TYPICAL WALL OUTLET ROUTING DETAIL

NO SCALE

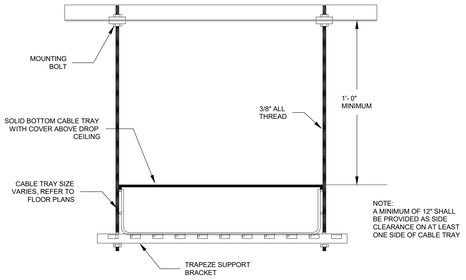

NOTE:
A MINIMUM OF 12" SHALL BE PROVIDED AS SIDE CLEARANCE ON AT LEAST ONE SIDE OF CABLE TRAY

TYPICAL CABLE TRAY TRAPEZE MOUNTING DETAIL

NO SCALE

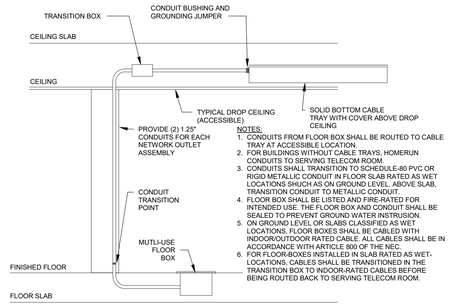

NOTES:
1. CONDUITS FROM FLOOR BOX SHALL BE ROUTED TO CABLE TRAY AT ACCESSIBLE LOCATION.
2. FOR BUILDINGS WITHOUT CABLE TRAYS, HOMERUN CONDUITS TO SERVING TELECOM ROOM.
3. CONDUITS SHALL TRANSITION TO SCHEDULE-80 PVC OR RIGID METALLIC CONDUIT IN FLOOR SLAB RATED AS WET LOCATIONS SHUCH AS ON GROUND LEVEL, ABOVE SLAB, TRANSITION CONDUIT TO METALLIC CONDUIT.
4. FLOOR BOX SHALL BE LISTED AND FIRE-RATED FOR INTENDED USE. THE FLOOR BOX AND CONDUIT SHALL BE SEALED TO PREVENT GROUND WATER INSTRUSION.
5. ON GROUND LEVEL OR SLABS CLASSIFIED AS WET LOCATIONS, FLOOR BOXES SHALL BE CABLED WITH INDOOR/OUTDOOR RATED CABLE. ALL CABLES SHALL BE IN ACCORDANCE WITH ARTICLE 800 OF THE NEC.
6. FOR FLOOR-BOXES INSTALLED IN SLAB RATED AS WET-LOCATIONS, CABLES SHALL BE TRANSITIONED IN THE TRANSITION BOX TO INDOOR-RATED CABLES BEFORE BEING ROUTED BACK TO SERVING TELECOM ROOM.

TYPICAL FLOOR MOUNTED OUTLET ROUTING DETAIL

NO SCALE

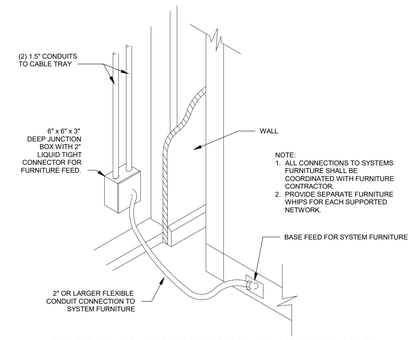

NOTE:
1. ALL CONNECTIONS TO SYSTEMS FURNITURE SHALL BE COORDINATED WITH FURNITURE CONTRACTOR.
2. PROVIDE SEPARATE FURNITURE WHIPS FOR EACH SUPPORTED NETWORK.

TYPICAL SYSTEMS FURNITURE CONNECTION DETAIL

NO SCALE

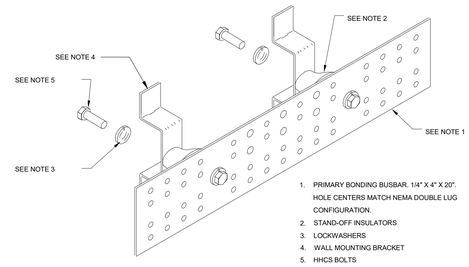

1. PRIMARY BONDING BUSBAR. 1/4" X 4" X 20". HOLE CENTERS MATCH NEMA DOUBLE LUG CONFIGURATION.
2. STAND-OFF INSULATORS
3. LOCKWASHERS
4. WALL MOUNTING BRACKET
5. HHCS BOLTS
6. MOUNT ABOVE LADDER TRAY ON PLYWOOD.

TYPICAL TELECOMMUNICATIONS PRIMARY BONDING BUSBAR (PBB) DETAIL

NO SCALE

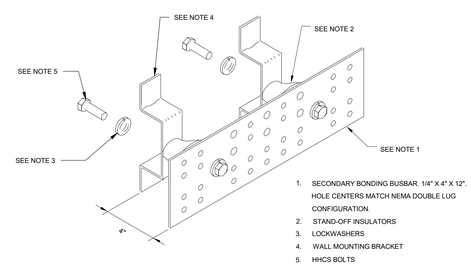

1. SECONDARY BONDING BUSBAR. 1/4" X 4" X 12". HOLE CENTERS MATCH NEMA DOUBLE LUG CONFIGURATION.
2. STAND-OFF INSULATORS
3. LOCKWASHERS
4. WALL MOUNTING BRACKET
5. HHCS BOLTS
6. MOUNT ABOVE LADDER TRAY ON PLYWOOD.

TYPICAL TELECOMMUNICATIONS SECONDARY BONDING BUSBAR (SBB) DETAIL

NO SCALE

N

AECOM

PROJECT

NEW SECURITY FORCES BUILDING

PAYNE BLVD.
CHARLOTTE, NORTH CAROLINA 28208

PAYNE BLVD
CHARLOTTE, NORTH CAROLINA 28208

CLIENT

NORTH CAROLINA AIR NATIONAL GAURD - 145TH AIRLIFT WING

145th AIRLIFT WING
4930 MINUTEMAN WAY
CHARLOTTE, NORTH CAROLINA 28208

ARCHITECT/DESIGNER

AECOM

277 W NATIONWIDE BLVD
COLUMBUS, OH 43215
614-464-4500

www.aecom.com

CONSULTANTS

REGISTRATION

REGISTERED COMMUNICATIONS DISTRIBUTION DESIGNER
Bicsi
P Joie Koenders
BICSI ID # 118551
Expires 12-31-26
RCDD

Signature

05/30/2025

KEY PLAN

ISSUE/REVISION

I/R	DATE	DESCRIPTION
2	05/30/2025	B-3 SUBMITTAL - FINAL
1	03/14/2025	B-2 SUBMITTAL
	09/29/2023	B-1 SUBMITTAL
	09/15/23	B-1 SUBMITTAL

PROJECT NUMBER

60637899
FJRP229030

SHEET TITLE

TELECOMMUNICATIONS DETAILS

SHEET NUMBER

T501

©2023 AECOM Corporation

Printed on ___% Post-Consumer Recycled Content Paper

16-TELECOM-16.50-T502-TELECOMMUNICATIONS DETAILS
Project Management Initials: MR Designer: Designer Checked: Checker Approved: ApproverARCH E1 30"x42"

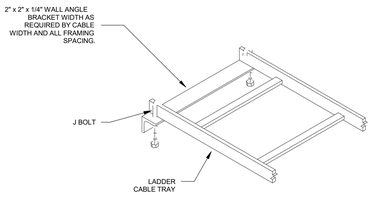

RUNWAY WALL ANGLE SUPPORT DETAIL

NO SCALE

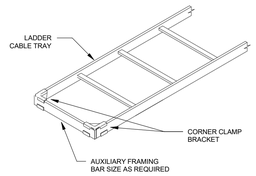

RUNWAY END CLOSING KIT DETAIL

NO SCALE

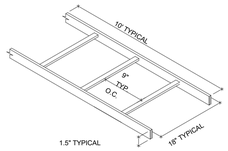

RUNWAY SPACING DETAIL

NO SCALE

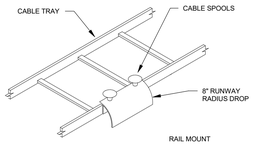

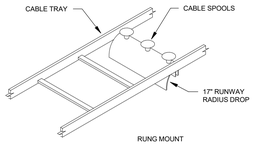

RUNWAY RADIUS DROP OUT DETAIL

NO SCALE

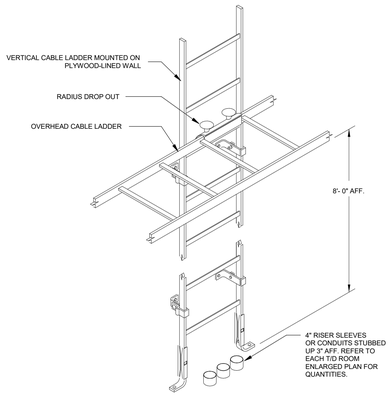

TYPICAL VERTICAL RUNWAY WITH CROSS-OVER DETAIL

NO SCALE

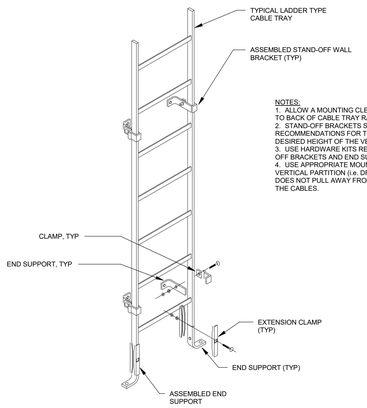

NOTES:
1. ALLOW A MOUNTING CLEARANCE OF 2" TO 3" MILLIMETERS FROM WALL TO BACK OF CABLE TRAY RAIL.
2. STAND-OFF BRACKETS SHALL BE USED IN PAIRS. USE MANUFACTURERS RECOMMENDATIONS FOR THE NUMBER OF BRACKETS REQUIRED FOR DESIRED HEIGHT OF THE VERTICAL LADDER TRAY.
3. USE HARDWARE KITS RECOMMENDED BY MANUFACTURER FOR STAND-OFF BRACKETS AND END SUPPORTS.
4. USE APPROPRIATE MOUNTING HARDWARE WHEN ATTACHING TO VERTICAL PARTITION (i.e. DRYWALL, CMU) ENSURING THAT LADDER TRAY DOES NOT PULL AWAY FROM VERTICAL PARTITION UNDER THE WEIGHT OF THE CABLES.

TYPICAL VERTICAL CABLE RUNWAY INSTALLATIOIN DETAIL

NO SCALE

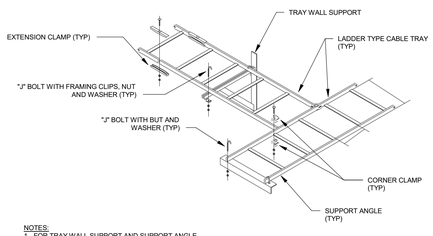

NOTES:
1. FOR TRAY WALL SUPPORT AND SUPPORT ANGLE, PROVIDE SUPPORT SPACING PER MANUFACTURERS' RECOMMENDATION USE MANUFACTURERS' MOUNTING HARDWARE AND WALL ANCHORS.
2. USE HARDWARE KITS RECOMMENDED BY MANUFACTURER FOR EXTENSION CLAMPS, FRAMING CLIPS, AND CORNER CLAMPS.

RUNWAY JUNCTION DETAIL

NO SCALE

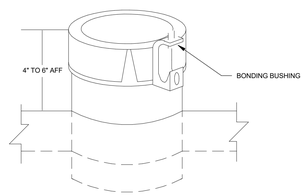

4" ENTRANCE CONDUIT WITH BONDING BUSHING

NO SCALE

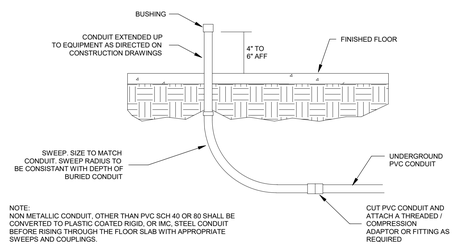

NOTE:
NON METALLIC CONDUIT, OTHER THAN PVC SCH 40 OR 80 SHALL BE CONVERTED TO PLASTIC COATED RIGID, OR IMC, STEEL CONDUIT BEFORE RISING THROUGH THE FLOOR SLAB WITH APPROPRIATE SWEEPS AND COUPLINGS.

PVC TO CONDUIT STUB UP DETAIL

NO SCALE

N

©2023 AECOM Corporation

AECOM

PROJECT

NEW SECURITY FORCES BUILDING

PAYNE BLVD.
CHARLOTTE, NORTH CAROLINA 28208

PAYNE BLVD
CHARLOTTE, NORTH CAROLINA 28208

CLIENT

NORTH CAROLINA AIR NATIONAL GAURD - 145TH AIRLIFT WING

145th AIRLIFT WING
4930 MINUTEMAN WAY
CHARLOTTE, NORTH CAROLINA 28208

ARCHITECT/DESIGNER

AECOM

277 W NATIONWIDE BLVD
COLUMBUS, OH 43215
614-464-4500

www.aecom.com

CONSULTANTS

REGISTRATION

REGISTERED COMMUNICATIONS DISTRIBUTION DESIGNER
Bicsi
P Joie Koenders
BICSI ID # 118551
Expires 12-31-26
RCDD

Signature

05/30/2025

KEY PLAN

ISSUE/REVISION

I/R	DATE	DESCRIPTION
2	05/30/2025	B-3 SUBMITTAL - FINAL
1	03/14/2025	B-2 SUBMITTAL
	09/29/2023	B-1 SUBMITTAL
	09/15/23	B-1 SUBMITTAL

PROJECT NUMBER

60637899
FJRP229030

SHEET TITLE

TELECOMMUNICATIONS DETAILS

SHEET NUMBER

T502

Last Plotted: 5/23/2025 12:33:39 PM
Filename: BIM 360/06-PAYNE\ (USA) (06637899)-SFNCANG145thBldg3768_SF-NC_ANG_R21_T-H1
Printed on ____% Post-Consumer Recycled Content Paper

16-TELECOM-16.60-T601-TECHNOLOGY RISER DIAGRAMS
Project Management Initials: MR Designer: Designer Checked: Checker Approved: ApproverARCH E1 30"x42"

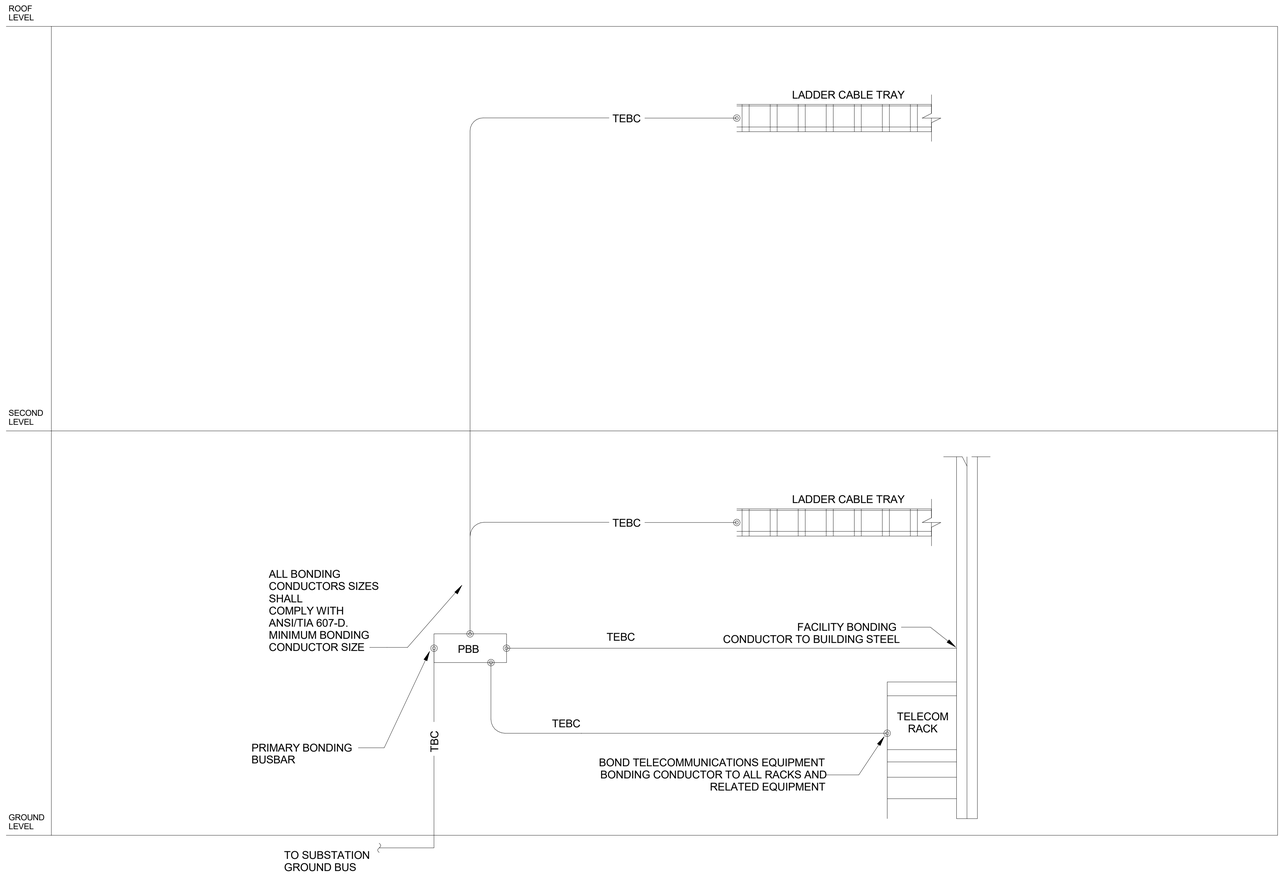

2 T601 **TECHNOLOGY BONDING RISER DIAGRAM**
Scale: 12" = 1'-0"

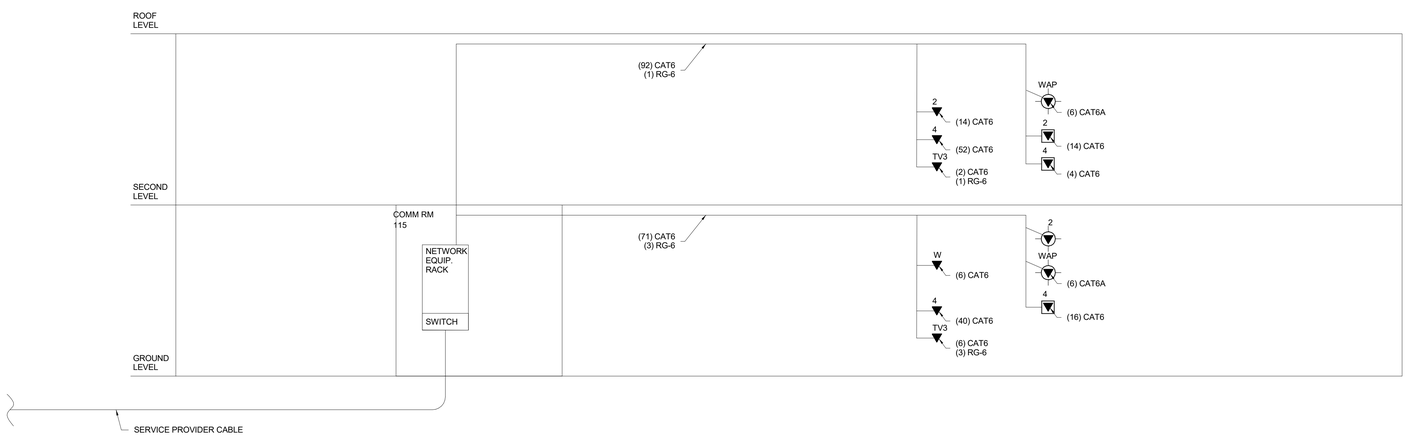

1 T601 **TECHNOLOGY RISER DIAGRAM**
Scale: 12" = 1'-0"

GENERAL NOTES

1. GROUNDING CONDUCTORS SHALL BE CONTINUOUS FROM TMGB TO MOST DISTANT TECHNOLOGY ROOM. SPLICES WITHIN THE TBB ARE ALLOWED IF REQUIRED CONDUCTOR LENGTHS ARE TOO EXCESSIVE FOR AVAILABLE SPOOL SIZES. SPLICES OF TBB SHALL BE STRAIGHT SPLICES WITH EXOTHERMIC WELDS. BUSBARS SHALL CONNECT TO A TBB USING ADDITIONAL CONDUCTORS (I.E., PIGTAILS) FROM A TBB TO TGB. PIGTAILS SHALL BE OF THE SAME SIZE AS THE TBB.

2. DO NOT CONNECT GROUNDING CONDUCTORS FOR TELECOMMUNICATIONS TO VERTICAL STRUCTURAL STEEL USED AS LIGHTNING DOWN CONDUCTORS. EXTEND CONDUCTORS AS REQUIRED TO MAINTAIN 20 FEET OF HORIZONTAL CLEARANCE FROM ANY LIGHTNING DOWN CONDUCTOR STRUCTURE STEEL COLUMNS AND TELECOMMUNICATIONS GROUND CONDUCTOR BONDS TO STRUCTURAL STEEL.

3. ROUTE TBB TO MINIMIZE TOTAL LENGTH. TBB SHALL BE INSTALLED USING THE BROADEST SWEEPS POSSIBLE. CABLE SHALL BE INSTALLED WITH MINIMUM NUMBER OF BENDS.

AECOM

PROJECT
NEW SECURITY FORCES BUILDING
PAYNE BLVD.
CHARLOTTE, NORTH CAROLINA 28208

PAYNE BLVD
CHARLOTTE, NORTH CAROLINA 28208

CLIENT
NORTH CAROLINA AIR NATIONAL GAURD - 145TH AIRLIFT WING
145th AIRLIFT WING
4930 MINUTEMAN WAY
CHARLOTTE, NORTH CAROLINA 28208

ARCHITECT/DESIGNER
AECOM
277 W NATIONWIDE BLVD
COLUMBUS, OH 43215
614-464-4500

www.aecom.com

CONSULTANTS

REGISTRATION

REGISTERED COMMUNICATIONS DISTRIBUTION DESIGNER
Bicsi
P Joie Koenders
BICSI ID # 118551
Expires 12-31-26
RCDD

Signature

05/30/2025

KEY PLAN

ISSUE/REVISION

I/R	DATE	DESCRIPTION
2	05/30/2025	B-3 SUBMITTAL - FINAL
1	03/14/2025	B-2 SUBMITTAL
	09/29/2023	B-1 SUBMITTAL
	09/26/23	B-1 SUBMITTAL

PROJECT NUMBER
60637899
FJRP229030

SHEET TITLE
TECHNOLOGY RISER DIAGRAMS

SHEET NUMBER
T601

N

Last Plotted: 5/23/2025 12:33:39 PM
Filename: BIM 360/Docs/145th ANG\60637899-SFNCANG145\60637899_SF-NC_ANG_R21_T-H
Printed on ____% Post-Consumer Recycled Content Paper
©2023 AECOM Corporation