UNITED STATES DEPARTMENT OF THE INTERIOR
BUREAU OF LAND MANAGEMENT

GAOA – FORT HOWES WATER STORAGE TANK REPLACEMENT

EASTERN MONTANA DAKOTAS DISTRICT OFFICE, FORT HOWES, MONTANA

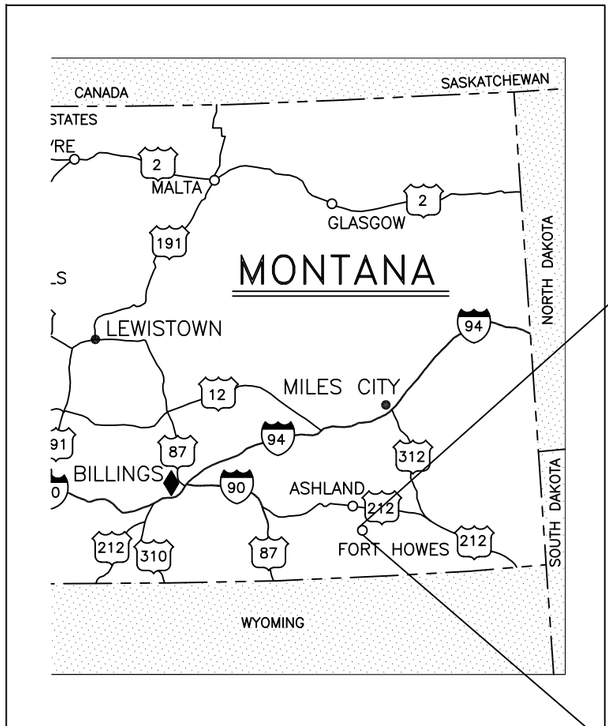

STATE REFERENCE MAP

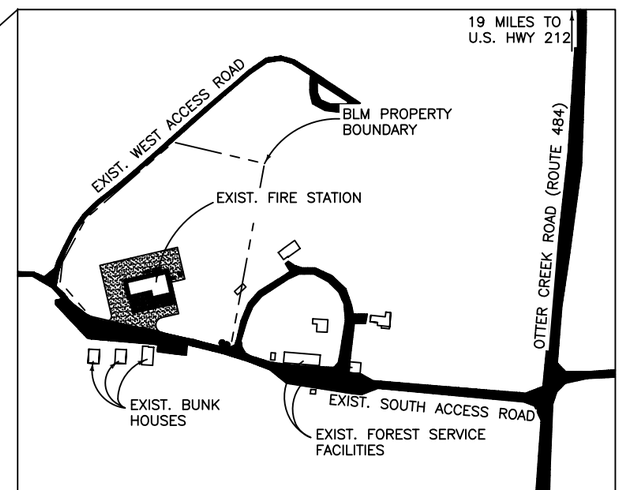

PROJECT VICINITY MAP

SYMBOL	DESCRIPTION	SYMBOL	DESCRIPTION
80	INTERSTATE HIGHWAY	★	STATE CAPITOL
93	U.S. HIGHWAY	♦	BLM STATE OFFICE
376	STATE HIGHWAY	•	BLM DISTRICT OFFICE

DRAWING INDEX

SHEET NO.	SHEET TITLE
1	COVER SHEET
2	EXISTING SITE
3	ENLARGED EXISTING SCHEMATIC AND DEMO PLAN
4	SITE PLAN SCHEMATIC
5	EXISTING SITE
6	STORAGE TANK REQUIREMENTS
7	TANK INSTALLATION DETAILS
8	TANK DEADMAN DETAILS

PLANS PREPARED BY THE BUREAU OF LAND MANAGEMENT NATIONAL OPERATIONS CENTER

APPROVAL

SECTION CHIEF, ENGINEERING PROGRMAS, BRANCH OF ARCHITECTURE AND ENGINEERING:

DAVID ROBERTS Digitally signed by DAVID ROBERTS Date: 2026.04.09 11:07:55 -06'00'

SIGNED *DATE*

THIS SIGNATURE BLOCK IS TO CONFIRM THAT THE PROJECT HAS BEEN REVIEWED AND HAS BEEN DETERMINED TO BE IN CONCURRENCE WITH SCOPE AND BUDGET, PER THE BLM MANUAL 1902.

CONCURRENCE

STATE ENGINEER

SIGNED *DATE*

DISTRICT MANAGER/FIELD MANAGER

SIGNED *DATE*

UNITED STATES DEPARTMENT OF THE INTERIOR
BUREAU OF LAND MANAGEMENT

COVER SHEET

GAOA – FORT HOWES WATER STORAGE TANK REPLACEMENT

EASTERN MONTANA DAKOTAS DISTRICT OFFICE MONTANA

MARK	DESCRIPTION	DATE	APPROVED

PROJECT NO: COVER SHEET.dwg
DESIGN OFFICE: NOC
DESIGNED BY: GS
DRAWN BY: GS
CHK'D BY: DL & TJB
APPROVED BY: DR
DATE: 03/20/2026

SHEET 1 OF 8

N:\PROJECTS\MONTANA\FORT HOWES WATER STORAGE TANK\DRAWINGS\COVER SHEET.DWG

GENERAL NOTES:

1. CONTRACTOR SHALL FIELD VERIFY LOCATIONS OF ALL EXISTING UTILITIES PRIOR TO STARTING ANY NEW EXCAVATIONS. CONTRACTOR SHALL NOTIFY THE CONTRACTING OFFICER IMMEDIATELY IF THERE ARE ANY CONFLICTS BETWEEN EXISTING UTILITIES AND NEW CONSTRUCTION.
2. DISTURBANCE TO EXISTING VEGETATION SHALL BE MINIMIZED TO THE GREATEST EXTENT POSSIBLE. ALL AREAS DISTURBED BY CONSTRUCTION OPERATIONS SHALL BE REPAIRED IN ACCORDANCE WITH THESE DRAWINGS AND SPECIFICATIONS.
3. THE SITE IS USED YEARLONG. MINIMIZE UTILITY DISRUPTIONS TO THE GREATEST EXTENT PRACTICABLE. PROVIDE BLM STAFF AND CONTRACTING OFFICER WITH A MINIMUM OF 48 HOURS NOTICE PRIOR TO WATER SERVICE DISRUPTION.
4. ALL MATERIALS AND EQUIPMENT TO BE REMOVED SHALL BECOME THE CONTRACTOR'S PROPERTY AND SHALL BE REMOVED FROM THE PROPERTY..
5. WATER SYSTEM MUST BE DISINFECTED AND FLUSHED PER AWWA REQUIREMENTS

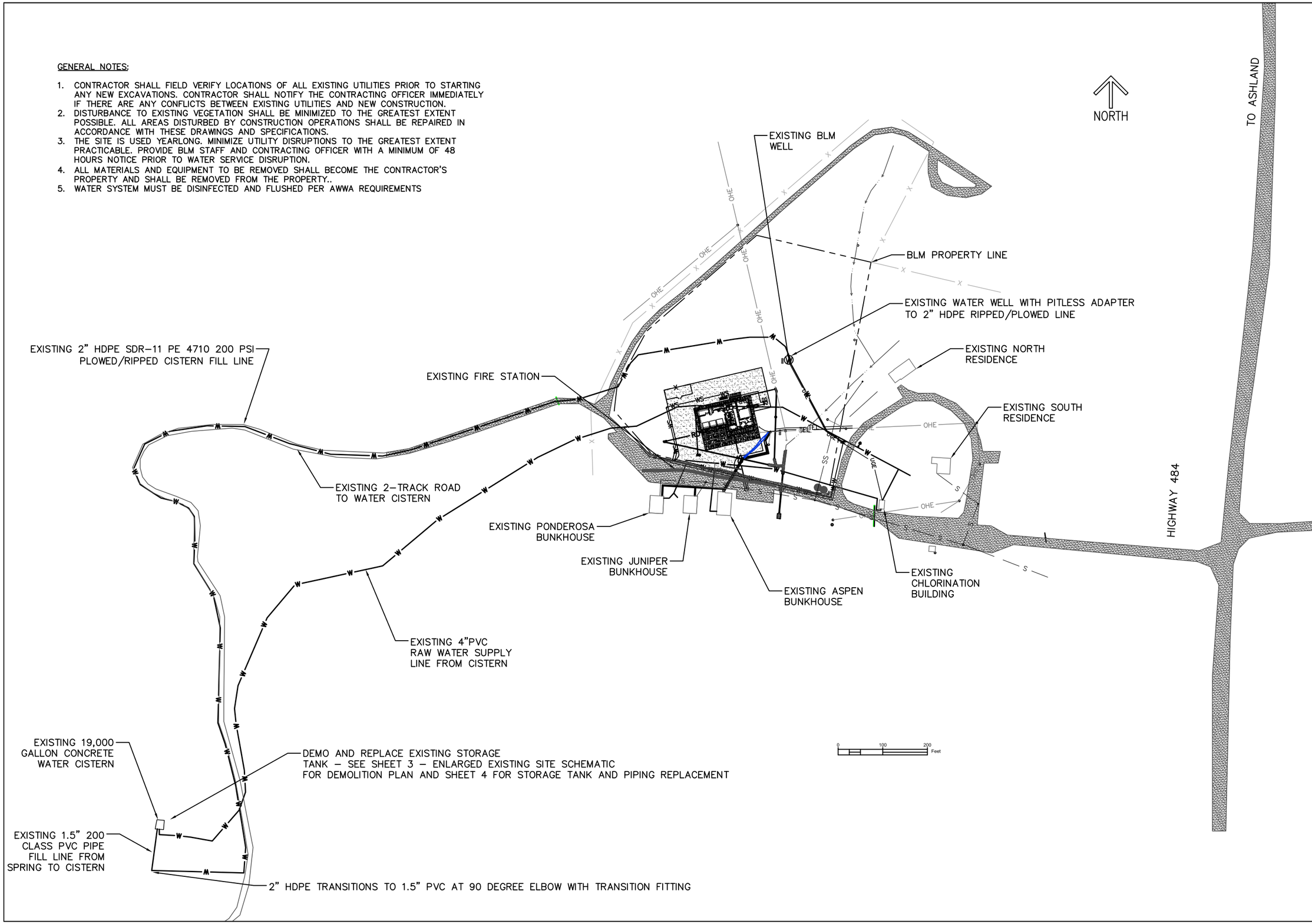

U.S. DEPARTMENT OF THE INTERIOR BUREAU OF LAND MANAGEMENT

UNITED STATES DEPARTMENT OF THE INTERIOR
BUREAU OF LAND MANAGEMENT

EXISTING SITE

GAOA - FORT HOWES WATER STORAGE TANK REPLACEMENT

EASTERN MONTANA DAKOTA'S DISTRICT OFFICE — MONTANA

MARK	REVISION	DATE	APPROVED

AUTOCAD NAME: SITE PLAN.DWG
DESIGN OFFICE: NOC
DESIGNED BY: GS — DATE: 9-17-25
DRAWN BY: GS — DATE: 9-7-25
CHECKED BY: DL & TJB — DATE: 2-9-26
APPROVED BY: DR — DATE: 3-20-26

SHEET 2 OF 8

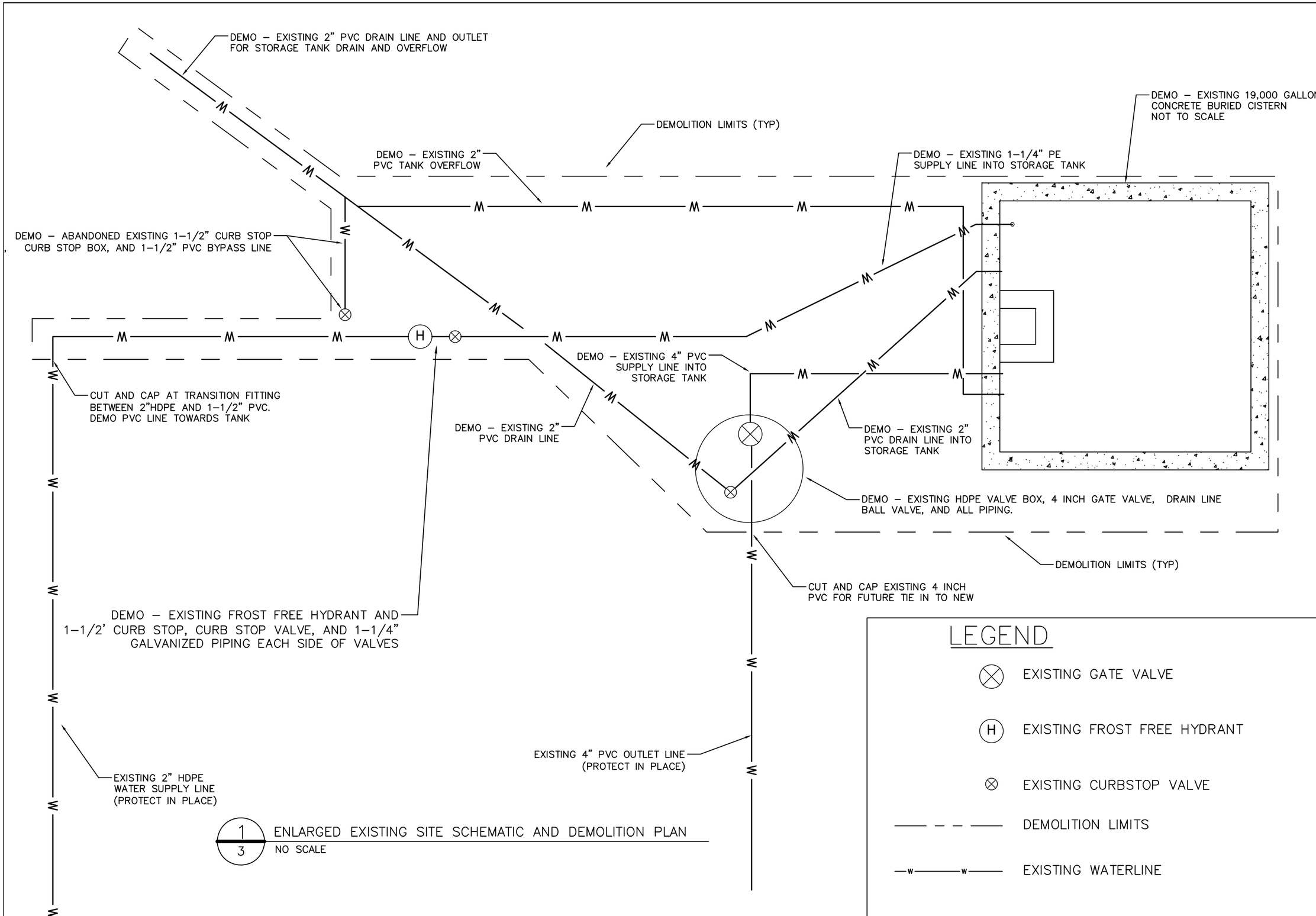

1/3 ENLARGED EXISTING SITE SCHEMATIC AND DEMOLITION PLAN
NO SCALE

U.S. DEPARTMENT OF THE INTERIOR BUREAU OF LAND MANAGEMENT

UNITED STATES DEPARTMENT OF THE INTERIOR
BUREAU OF LAND MANAGEMENT

ENLARGED EXISTING SCHEMATIC AND DEMO PLAN

GAOA – FORT HOWES WATER STORAGE TANK REPLACEMENT

EASTERN MONTANA DAKOTAS DISTRICT OFFICE MONTANA

MARK	REVISION	DATE	APPROVED

AUTOCAD NAME: SITE PLAN.DWG
DESIGN OFFICE: EMDDO
DESIGNED BY: GS DATE: 1–25–26
DRAWN BY: GS DATE: 1–25–26
CHECKED BY: DL & TJB DATE: 2–9–26
APPROVED BY: DR DATE: 3–20–26

SHEET 3 OF 8

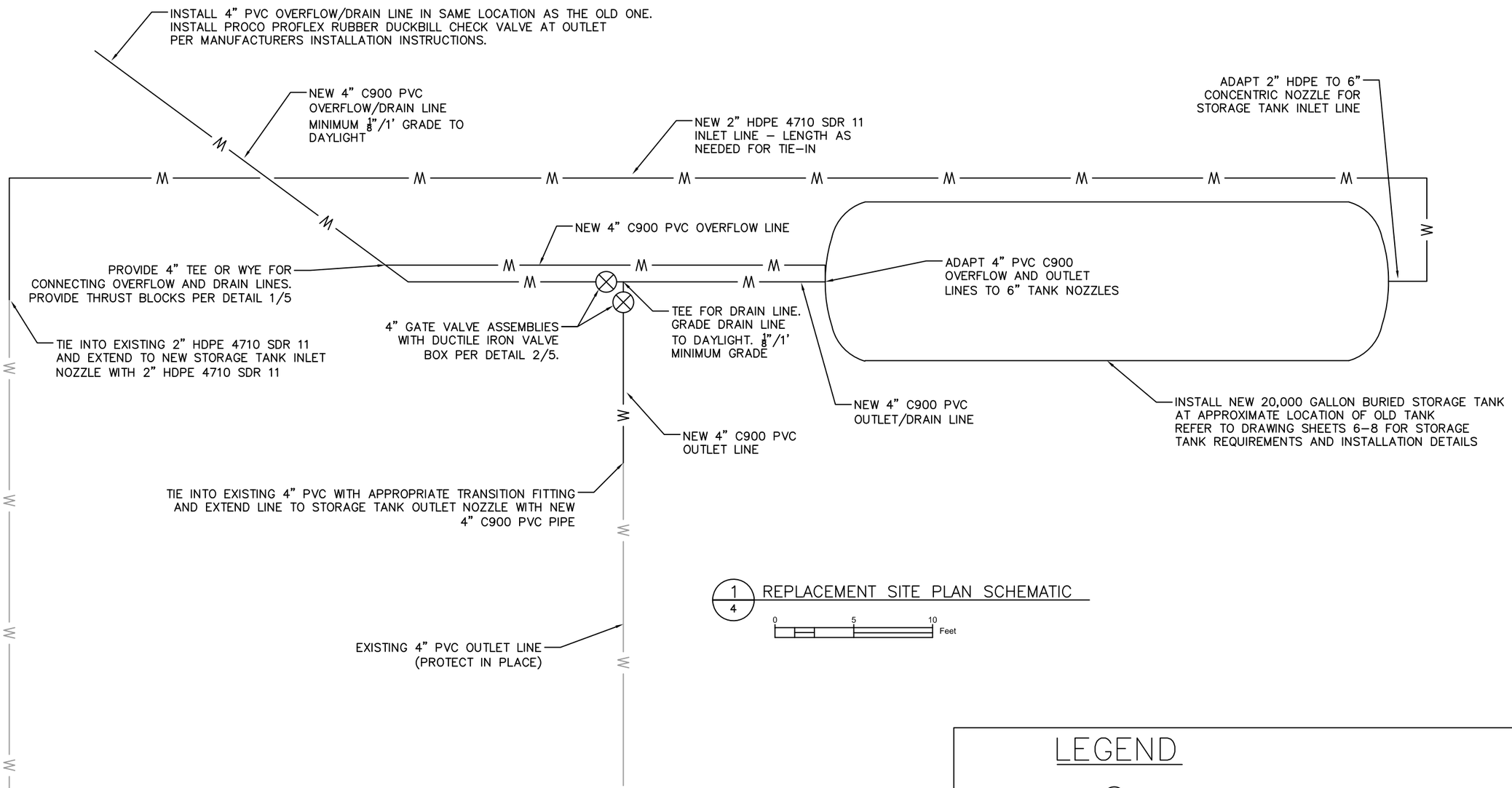

1/4 REPLACEMENT SITE PLAN SCHEMATIC

0 5 10 Feet

CONSTRUCTION NOTES:

1. MAINTAIN 6.0 FEET OF COVER (MIN.) OVER ALL NEW WATERLINE AND APPURTENANCES. WATERLINE TO BE INSTALLED PER DETAIL 3/5.
2. PROVIDE THRUSTBLOCKS PER DETAIL 1/5.
3. ALL NEW WATERLINE PIPING SHALL BE PRESSURE TESTED, DISINFECTED AND FLUSHED IN ACCORDANCE WITH THE PROJECT SPECIFICATIONS.
4. CONTRACTOR SHALL PROVIDE CONTRACTING OFFICER AND ONSITE BLM STAFF 48 HOURS ADVANCE NOTICE PRIOR TO ANY REQUIRED WATER SERVICE OR UTILITY DISRUPTIONS.
5. WATER SYSTEM AND STORAGE TANK MUST BE DISINFECTED AND FLUSHED PER AWWA REQUIREMENTS. EXISTING SYSTEM INCLUDING TANK HAS IRON BACTERIA. ENSURE IT IS NOT TRANSFERRED TO THE NEW TANK AND UPDATED SYSTEM.

LEGEND

⊗ NEW GATE VALVE

—— W —— EXISTING WATERLINE

—— W —— NEW WATERLINE

U.S. DEPARTMENT OF THE INTERIOR BUREAU OF LAND MANAGEMENT

UNITED STATES DEPARTMENT OF THE INTERIOR
BUREAU OF LAND MANAGEMENT

REPLACEMENT SITE PLAN SCHEMATIC

GAOA – FORT HOWES WATER STORAGE TANK REPLACEMENT

EASTERN MONTANA DAKOTAS DISTRICT OFFICE MONTANA

MARK	REVISION	DATE	APPROVED

AUTOCAD NAME: SITE PLAN.DWG
DESIGN OFFICE: NOC
DESIGNED BY: GS DATE: 1-26-26
DRAWN BY: GS DATE: 1-26-26
CHECKED BY: DL DATE: 2-9-26
APPROVED BY: ?? DATE: 3-18-26

SHEET 4 OF 8

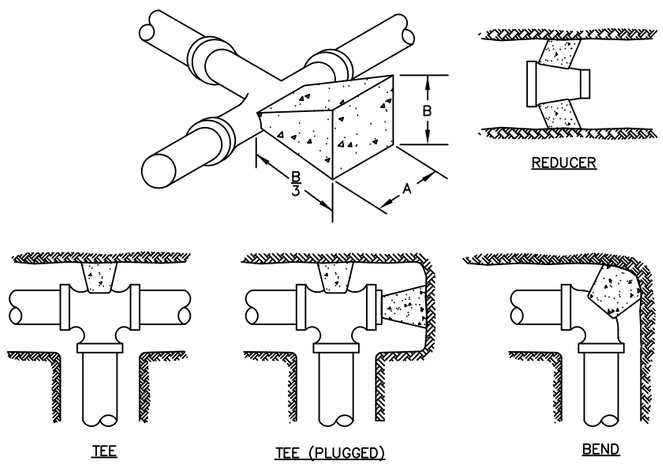

DIMENSION FOR THRUST BLOCKING								
FITTINGS SIZES	TEES & PLUGS		90° BEND		45° BEND & WYES		REDUCERS & 22 1/2° BEND	
	A	B	A	B	A	B	A	B
4"/LESS	1'–7"	1'–2"	1'–9"	1'–6"	1'–8"	0'–10"	1'–7"	0'–6"
6"	2'–0"	1'–11"	2'–5"	2'–2"	1'–10"	1'–7"	1'–9"	0'–10"

NOTES:

1. THRUST BLOCKS REQ'D. ON ALL BURIED WATERLINE FITTINGS AND BENDS.
2. DOUBLE WRAP ALL FITTINGS WITH POLYETHYLENE.

1/5 THRUST BLOCK REQ'MTS

NO SCALE

CONSTRUCTION NOTES:

1. MAINTAIN 6.0 FEET OF COVER (MIN.) OVER ALL NEW WATERLINE AND APPURTENANCES
2. ALL NEW WATERLINE PIPING SHALL BE PRESSURE TESTED, DISINFECTED AND FLUSHED IN ACCORDANCE WITH THE PROJECT SPECIFICATIONS.
3. CONTRACTOR SHALL PROVIDE CONTRACTING OFFICER AND ONSITE BLM STAFF 48 HOURS ADVANCE NOTICE PRIOR TO ANY REQUIRED WATER SERVICE OR UTILITY DISRUPTIONS.
4. WATER SYSTEM MUST BE DISINFECTED AND FLUSHED PER AWWA REQUIREMENTS.

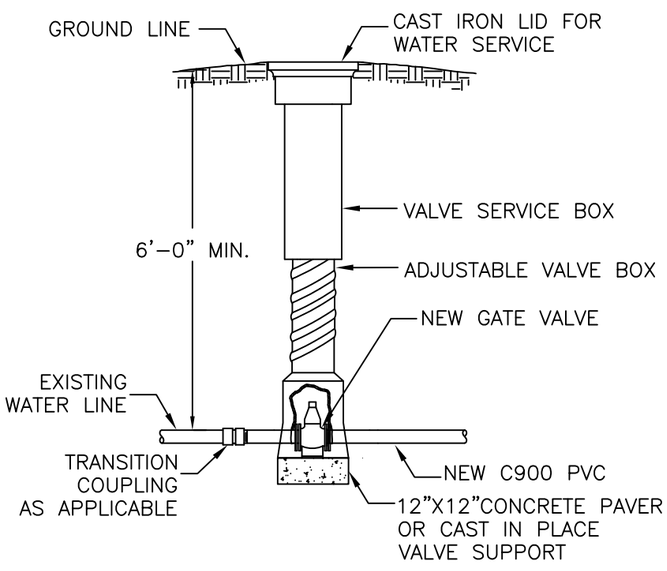

2/5 GATE VALVE ASSEMBLY

NO SCALE

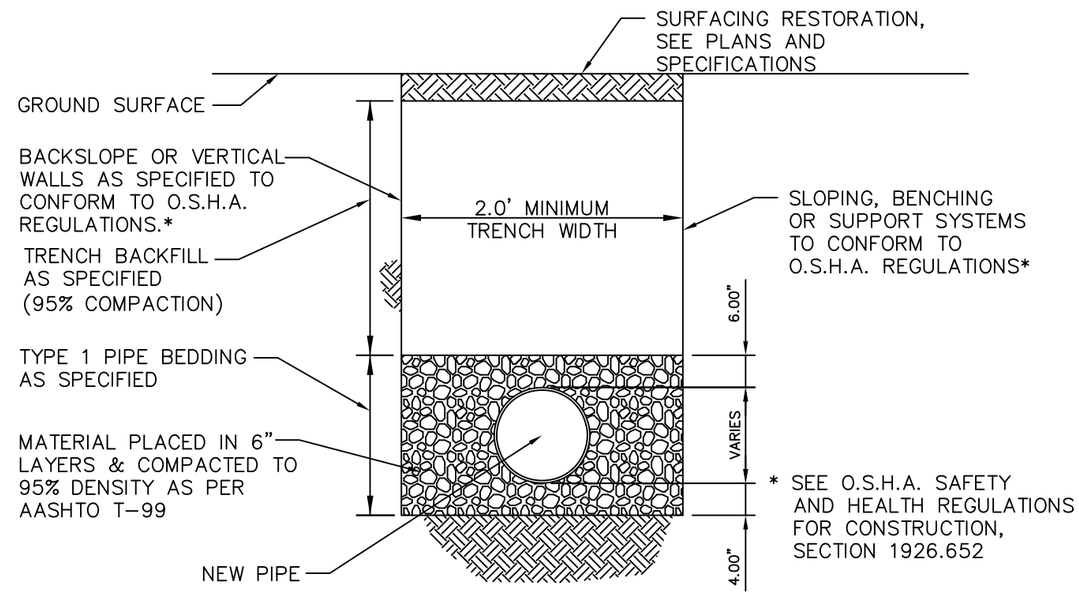

3/5 STANDARD UTILITY TRENCH

NO SCALE

NOTE: BACKFILL AND TYPE 1 BEDDING MATERIALS SHALL BE COMPACTED TO 95% PROCTOR. FOLLOW STANDARD UTILITY TRENCH DETAIL ON ALL CONNECTIONS AND APPURTENANCES.

U.S. DEPARTMENT OF THE INTERIOR BUREAU OF LAND MANAGEMENT

UNITED STATES DEPARTMENT OF THE INTERIOR
BUREAU OF LAND MANAGEMENT

DETAILS

GAOA – FORT HOWES WATER STORAGE TANK REPLACEMENT

EASTERN MONTANA DAKOTAS DISTRICT OFFICE MONTANA

MARK	REVISION	DATE	APPROVED

AUTOCAD NAME: SITE PLAN.DWG
DESIGN OFFICE: NOC
DESIGNED BY: GS DATE: 1–29–26
DRAWN BY: GS DATE: 1–29–26
CHECKED BY: DL & TJB DATE: 2–9–26
APPROVED BY: DR DATE: 3–20–26

SHEET 5 OF 8

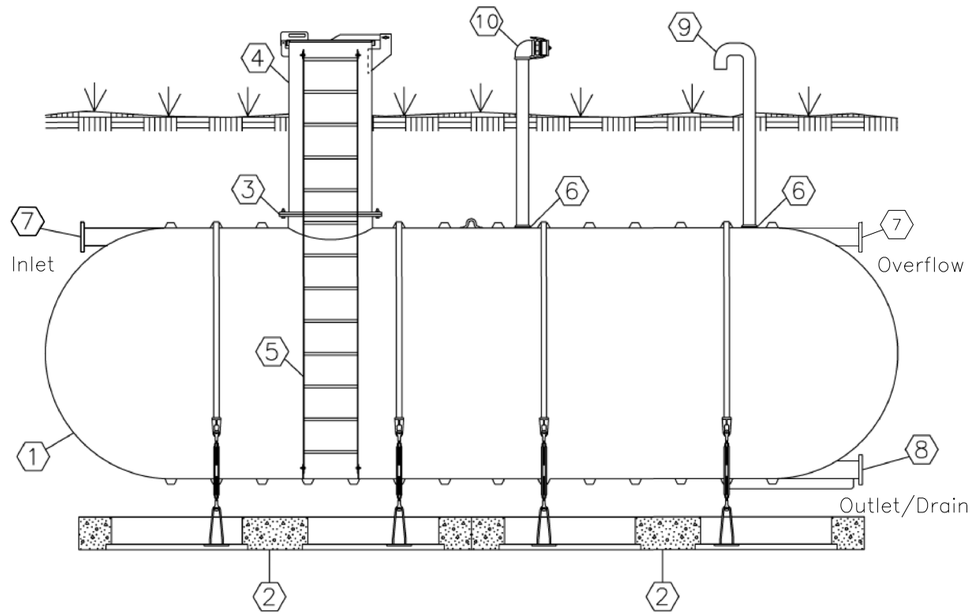

NO.	DESCRIPTION
1	XERXES SINGLE WALL FRP TANK
2	XERXES PRECAST DEADMAN SYSTEM W/ HOLD DOWN STRAP AND TURNBUCKLE ASSEMBLY
3	30" MANWAY WITH (BLANK COVER FOR TANK TESTING ONLY)
4	30" MANWAY EXTENSION ACCESS WITH HINGED & LOCKABLE TOP (UV PROTECTED)
5	NSF APPROVED FRP LADDER
6	4" NPT SERVICE FITTING
7	6" NSF APPROVED TANGENTIAL NOZZLE
8	6" NSF APPROVED TANGENTIAL FULL BOTTOM DRAIN NOZZLE
9	4" VENT PIPE WITH GOOSENECK AND BUG SCREEN
10	4" AUXILARY FILL W/CAM LOCK CONNECTION

TYPICAL TANK PROFILE INCLUDING ALL FEATURES.

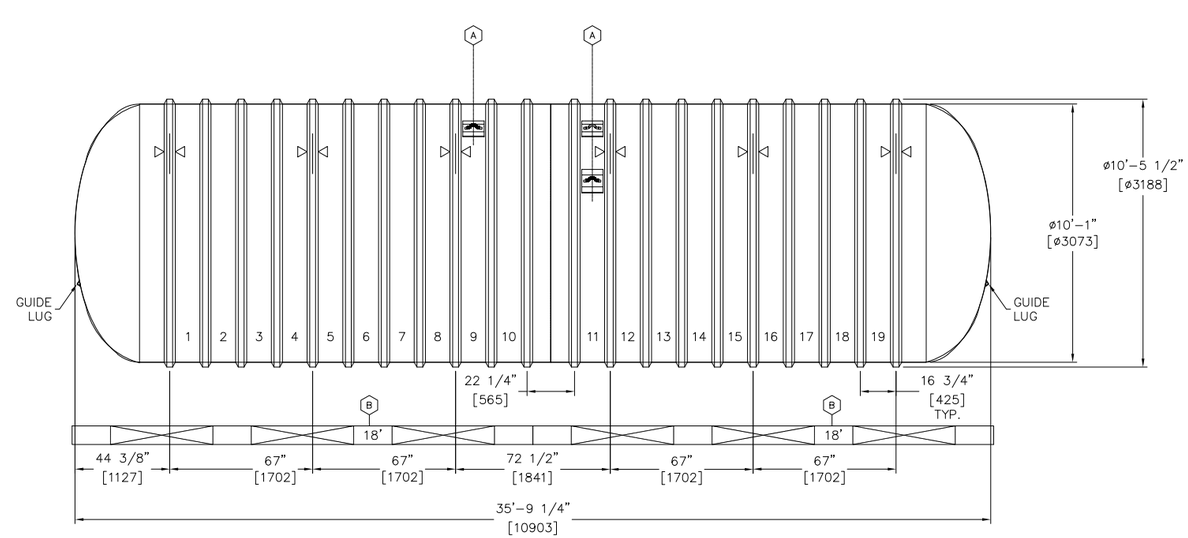

ITEM	QTY	DESCRIPTION	PART NO.
A	3	LIFT LUG, ON BENT PLATE, 10" x 12", 10' (38" 38" 32")	C340010
B	4	18' PREFABRICATED CONCRETE DEADMEN KIT	–
▷◁	6	HOLD DOWN STRAP LOCATION	–

TYPICAL TANK DIMENSIONS FOR A 20,000 GALLON TANK

DRAWING NOT TO SCALE

GENERAL NOTES:

1. TANK VOLUME – 20,000 GALLONS
2. MATERIAL OF CONSTRUCTION – REINFORCED FIBER GLASS CONSTRUCTION.
3. TANK CERTIFIED TO NSF61 FOR POTABLE WATER.
4. MANUFACTURE – XERXES OR APPROVED EQUAL.
5. INSTALL WATER STORAGE TANK PER MANUFACTURE INSTALLATION INSTRUCTION
6. INSTALL MANUFACTURE SUPPLIED ACCESS HATCH AND LADDER.
7. DISINFECTION PER AWWA C652–19 DISINFECTION OF WATER STORAGE FACILITIES.
8. CONNECT WATER STORAGE TANK TO EXISTING DISTRIBUTION SYSTEM.
9. INSTALL A DAY LIGHT DRAIN ON TANK OUTLET. REFERENCE ITEM 8 IN TANK PROFILE ABOVE. MINIMUM GRADE TO DAYLIGHT $\frac{1}{8}$"/1' OF DROP.
10. IINSTALL OVERFLOW ON THE WATER STORAGE TANK. OVERFLOW SHOULD BE PLUMBED TO DRAIN WITH TEE. MINIMUM GRADE $\frac{1}{8}$"/1' OF DROP. REFERENCE ITEM 7 IN TANK PROFILE ABOVE.
10. INSTALL PROCO PROFLEX STYLE 730 RUBBER DUCKBILL CHECK VALVE OR APPROVED EQUAL ON DAYLIGHT TANK OVERFLOW/DRAIN.
11. DISINFECT ALL EQUIPMENT AND HAND TOOLS PRIOR TO INSTALLATION OF WATER STORAGE TANK. EXISTING TANK HAD IRON BACTERIA PRESENT. DO NOT TRANSFER THE BACTERIA TO THE NEW WATER STORAGE TANK.

NATIONAL SYSTEM OF PUBLIC LANDS
U.S. DEPARTMENT OF THE INTERIOR
BUREAU OF LAND MANAGEMENT

UNITED STATES DEPARTMENT OF THE INTERIOR
BUREAU OF LAND MANAGEMENT

STORAGE TANK REQUIREMENTS

GAOA – FORT HOWES WATER STORAGE TANK REPLACEMENT

EASTERN MONTANA DAKOTAS DISTRICT OFFICE

MONTANA

MARK	DESCRIPTION	DATE	APPROVED

PROJECT NO:
DESIGN OFFICE: NOC
DESIGNED BY: DL
DRAWN BY: DL
CHK'D BY: GS
APPROVED BY: DR
DATE: 03/18/2026

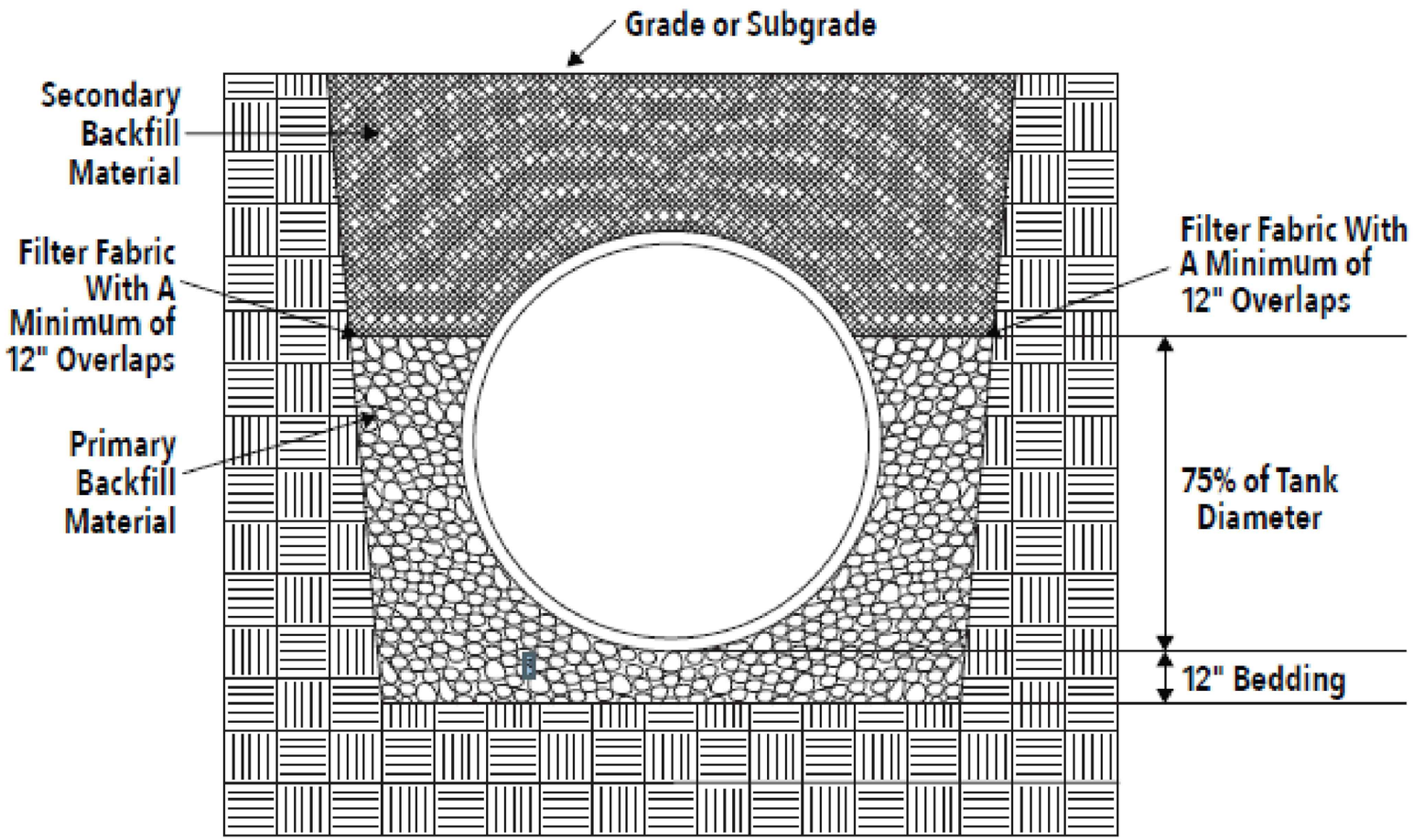

GENERAL NOTES:

1. ALL EXCAVATIONS ARE TO FOLLOW OSHA 1926.651.
2. INSTALL WATER STORAGE TANK PER MANUFACTURE INSTRUCTIONS AND THE ADDITIONAL BACKFILL REQUIREMENTS IN THE CONSTRUCTION DRAWINGS.
3. TEST WATER STORAGE TANK PER MANUFACTURE INSTRUCTIONS.
4. SUBMIT ALL TEST REPORTS FOR SOIL COMPACTION, TANK PRESSURE TEST, MATERIAL CERTIFICATIONS FOR THE BACKFILL TO THE CONTRACTING OFFICE.
5. INSTALLATION TO BE PERFORMED BY MANUFACTURE CERTIFIED INSTALLERS.

BACKFILL REQUIREMENTS:

1. INSTALL A GEOTEXTILE MATERIAL AT THE PERIMETER INTERFACE OF THE NATIVE SOIL AND BETWEEN THE PRIMARY AND SECONDARY BACKFILL LAYERS THAT MEETS THE FOLLOWING: 100% POLYPROPYLENE STABLE FIBER, NEEDLE-PUNCHED, WEIGHT 3.5 OUNCES PER SQUARE YARD.
2. OVERLAP ALL GEOTEXTILE SEAMS A MINIMUM OF 12 INCHES.
3. PRIMARY BACKFILL AND BASE COURSE (BEDDING LAYER)- USE COURSE AGGREGATE AS BACKFILL
4. PRIMARY BACKFILL MATERIAL SHOULD BE A MIX OF WELL-GRADED STONES, CONFORMING TO THE 6,67,7 AND 8 SIZES OF ASTM C33.
5. PRIMARY BACKFILL, NO MORE THAN 5% OF MATERIAL CAN PASS THROUGH THE #8 SIEVE.
6. COMPACT PRIMARY BACKFILL USING 3 PASSES WITH VIBRATORY EQUIPMENT IN 12" LIFTS .
7. SECONDARY BACKFILL - COMPACT TO ACHIEVE A MINIMUM OF 90% STANDARD PROCTOR DENSITY.
8. SECONDARY BACKFILL- 100% OF THE MATERIAL TO PASS THROUGH A 1-INCH SIEVE.
9. SECONDARY BACKFILL - INSTALL IN 12" LIFTS.
10. RESEED DAMAGED SURFACE AREA VEGETATION WITH NATIVE GRASS MIXES, PROTECT AREA AND WATER UNTIL SEED GERMINATES.
11. DO NOT ALLOW BACKFILL TO FALL FROM EQUIPMENT MORE THAN 2-3 FEET TO PROTECT TANK.

UNITED STATES DEPARTMENT OF THE INTERIOR
BUREAU OF LAND MANAGEMENT

TANK INSTALLATION DETAILS

GAOA – FORT HOWES WATER STORAGE TANK REPLACEMENT

EASTERN MONTANA DAKOTAS DISTRICT OFFICE MONTANA

MARK	DESCRIPTION	DATE	APPROVED

PROJECT NO:
DESIGN OFFICE: NOC
DESIGNED BY: D.LIRA
DRAWN BY: D.LIRA
CHK'D BY: GS
APPROVED BY: DR
DATE: 03/26

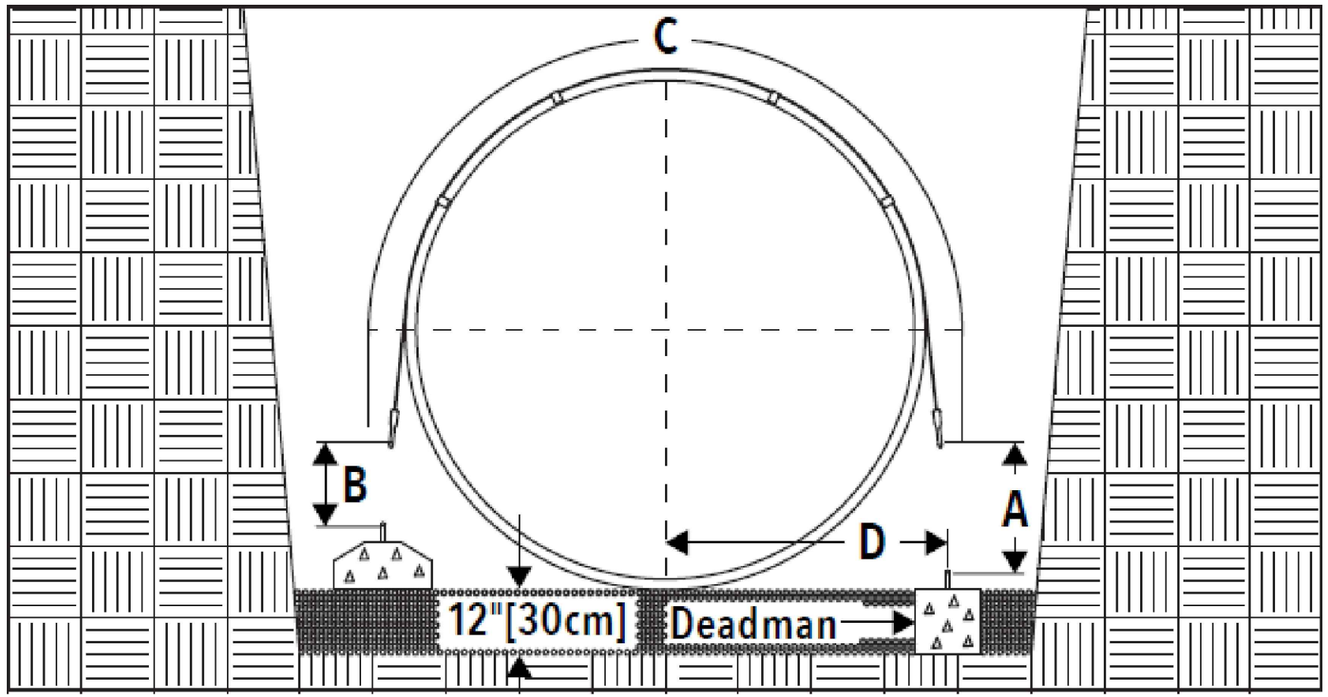

DEADMAN INSTALLATION DIMENSIONS FOR A 10 FOOT DIAMETER 20,000 GALLON TANK.

1. A -STRAP EYE TO ANCHOR POINT - 38 INCHES
2. B - ALTERNATE DIMENSION - 26 INCHES - REQUIRES PRE APPROVAL BY BUREAU OF LAND MANAGEMENT ENGINEERING
3. C- STRAP LENGTH -236 INCHES
4. D - CENTER OF TANK TO CENTER OF DEADMAN - 70 INCHES..
5. INSTALL MANUFACTURE'S DEADMAN SYSTEM IN BASE LAYER.
6. ALL ANCHORING CABLES AND COMPONENTS TO BE HOT DIPPED GALVANIZED.
7. FOLLOW MANUFACTURE'S INSTRUCTIONS FOR TERMINATING THE CABLES TO THE DEADMAN.
8. DEADMAN SYSTEM SUPPLIED BY THE MANUFACTURE OF THE WATER STORAGE TANK.

UNITED STATES DEPARTMENT OF THE INTERIOR
BUREAU OF LAND MANAGEMENT

TANK DEADMAN DETAILS

GAOA - FORT HOWES STORAGE TANK REPLACEMENT

EASTERN MONTANA DAKOTAS DISTRICT OFFICE MONTANA

MARK	DESCRIPTION	DATE	APPROVED

PROJECT NO:
DESIGN OFFICE: NOC
DESIGNED BY: DL
DRAWN BY: DL
CHK'D BY: GS
APPROVED BY: DR
DATE: 3/26