24-25-2002
25-Jul-2024

PURCHASE DESCRIPTION FOR THE ACQUISITION OF A C-FRAME HYDRAULIC PRESS

1.0 SCOPE.

1.1 Scope. The content of this specification describes the minimum requirements for a C-frame hydraulic press. Installation shall occur at Bld A-47 SRF-JRMC, Yokosuka, Japan, with a building access dimension of 6.9meters (W) x 6.0meters (H).

2.0 APPLICABLE DOCUMENTS. The documents listed in this section are cited in sections 3 and 4 of this specification. This section does not include documents cited in other sections of this specification or recommended for additional information or as examples. While every effort has been made to ensure the completeness of this list, document users are cautioned that they must meet all requirements of documents cited in sections 3 and 4 of this specification, whether or not they are listed in section 2. Unless otherwise specified, the documents listed in the solicitation or contract shall be the current edition at time of solicitation.

2.1 Government Documents.

2.1.1 Specifications, Standards, and Handbooks. The following specifications, standards and handbooks form a part of this document to the extent specified herein.

STANDARDS – FEDERAL

FED-STD-H28B: Screw Thread Standards for Federal Service

FED-STD-313F: Material Safety Data, Transportation Data, and Disposal Data for Hazardous Materials Furnished to Government Activities

U.S Department of Labor, Occupational Safety and Health Administration (OSHA)

29 CFR 1910.212 – Occupational Safety and Health Standards Subpart O Machinery and Machine Guarding.

29 CFR 1910.212 – Occupational Safety and Health Standards Subpart J General Environmental Controls.

21 CFR 1040.10 – Laser products.

21 CFR 1040.11 – Specific purpose laser products.

(Copies available online at https://www.ecfr.gov/ or from OSHA Publications Superintendent of Documents P.O. Box 37535 Washington, D.C. 20013-7535)

Environmental Protection Agency (EPA)

40 CFR 82: Protection of Stratospheric Ozone

(Copies available online at https://www.ecfr.gov/ or from riel Rios Building 1200 Pennsylvania Avenue, N.W. Washington, DC 20460)

DEPARTMENT OF DEFENSE

NAVAL FACILITIES ENGINEERING COMMAND

NAV P-307 w/Change 3: Management of Weight Handling Equipment

(Copies available online at or from Naval Inventory Control Point, ATTN: NAVICP 03334 Room 3200, 700 Robbins Avenue, Philadelphia, PA 19111-5098)

MILITARY STANDARDS

MIL-STD-130N w/Change 1: Identification Marking of U.S. Military Property Item Unique Identification Marking (IUID)

(Application for copies should be addressed to Air Force Product Data Systems Modernization Standards (TMSS) Office, 554 ELSG/SBP, 4375 Chidlaw Road, Bldg. 262, Room S008, Wright-Patterson AFB, OH 45433-5006, Phone (937) 257-0870 or 0853 or https://quicksearch.dla.mil/qsSearch.aspx)

2.1.2 Other Government Documents, Drawings, and Publications. The following other Government documents, drawings, and publications form a part of this document to the extent specified herein. Unless otherwise specified, the documents listed in the solicitation or contract shall be the current edition at time of solicitation.

GOVERNMENT DRAWING

2.2 Non-Government Publications, Specifications, Standards, and Handbooks. The following documents form a part of this document to the extent specified herein. Unless otherwise specified, the documents listed in the solicitation or contract shall be the current edition at time of solicitation.

International Organization for Standardization (ISO)

ISO 4413: Hydraulic fluid power-General rules and safety requirements for systems and their components

ISO 4414: Pneumatic Power-General rules and safety requirements for systems and their components

(Application for copies should be addressed to the International Organization for Standardization (ISO) 1 rue de Varembé, Casepostale56, CH211Geneva 20, Switzerland)

National Electrical Manufacturers Association (NEMA)

NEMA 250: Enclosures for Electrical Equipment (1000 V Maximum)

NEMA MG 1: Motors and Generators

(Application for copies should be addressed to the National Electrical Manufacturers Association, 1300 N 17th Street, Rosslyn, VA 22209)

National Fire Protection Association (NFPA)

NFPA 70: National Electrical Code

NFPA 79: Electrical Standard for Industrial Machinery

(Applications for copies should be addressed to the National Fire Protection Association, ATTN: Support Services, 11 Tracy Drive, Avon, MA 02322)

Japanese Industrial Standards (JIS)

JIS B 6403 – Hydraulic Press – Testing of the accuracy

(Copies available at https://www.jisc.go.jp/)

Japan Electric Association Code (JEAC)

JEAC 8001 – Interior Wiring Code

(Copies available at https://store.denki.or.jp/)

Japan Environment Governing Standards (JEGS)

(Copies available at https://www.usfj.mil/Resources/JEGS/)

Manufacturers Association, 1300 N 17th Street, Rosslyn, VA 22209)

2.3 Order of Precedence. In the event of a conflict between the text of this document and the references cited herein, the text of this document takes precedence. Nothing in this document, however, supersedes applicable laws and regulation unless a specific exemption has been obtained.

2.4 Acronym Definitions Not Explicitly Listed in Text. The following acronyms not explicitly listed in each section text are defined as follows:

a. DIN- German Institute for Standardization
b. EN- European Standard

2.5 Proposal Format. Proposal shall be submitted using the following mathematical conventions:

a. Whole numbers will be expressed where one thousand is written as 1,000.
b. Decimals will be expressed where one-tenth is written as 0.1.
c. Submission of compliance statement and descriptive literature shall be in the same units as the units listed in this document.
d. In accordance with ASME Y14.5, all values listed in parenthesis will be treated as reference units and not the official proposed value in determining acceptability. For example, 300mm (11.8 inches), the 300mm will be used in determination of acceptability, and the measurement in parenthesis will not be considered in determining acceptability.

3.0 REQUIREMENTS.

3.1 Design. The item offered shall be new and a current commercially available model. A current model is defined as the manufacturer's currently produced model which, on the date this solicitation is issued, has been designed, engineered, sold or is being offered for sale through advertisements or manufacturer's published catalogue or brochures. Products such as a prototype unit, pre-production model, or experimental unit do not qualify as meeting the requirements specified herein. The machine shall include all components, parts, and features necessary to meet the performance requirements specified herein. All parts subject to wear, breakage or distortion shall be accessible for adjustment, replacement, and repair.

3.1.1 Measuring and Indicating Device Graduations. All measuring and indicating devices on the machine shall be graduated in the Japanese customary units (metric). An electronic control system that demonstrates switching between manufacturer standard units to Japan/United States customary units will be found acceptable.

3.1.2 Controls. All electrical, mechanical, hydraulic, and pneumatic operating controls shall be located convenient to the operator's workstation(s).

3.1.3 Safety and Health Requirements. All machine parts, components, mechanisms, and assemblies furnished on the machine, whether or not specifically required herein, shall comply with all of the requirements of OSHA 29 CFR 1910 or equivalent ISO/EN/DIN/JIS standards. At the time of proposal, the vendor shall indicate which document they will utilize for compliance to the requirements.

3.1.3.1 Safety Guarding. Covers, guards, or other safety devices shall be provided per 29 CFR 1910 or equivalent ISO/EN/DIN/JIS standards. At the time of proposal, the vendor shall indicate which document they will utilize for compliance to the requirements. The safety devices shall not interfere with the operation of the machine. The safety devices shall prevent unintentional contact with the guarded part, and shall be easily removed to facilitate inspection, maintenance, and repair of the parts.

3.1.3.2 General Safety. All machine parts, components, mechanisms, and assemblies furnished on the unit shall comply with all specific requirements of OSHA Safety and Health Standard (29 CFR 1910), General Industry. After January 2, 1990, whenever replacement or major repair, renovation or modification of a machine or equipment is performed, and whenever new machines or equipment are installed, energy isolating devices for such machine or equipment shall be designed to accept a lockout device.

3.1.4 Audible Noise Level. Audible noise emitted by the equipment shall not exceed 84 decibels (dB), measured on the "A" weighted scale of a standard Type II sound level meter, at the operator's work position or any point at a distance of three (3) feet from the equipment. Noise generated by the work piece shall be excluded in determining compliance of the equipment with the 84 dB requirements.

3.1.5 Hazardous Material Exclusions. Supplies or materials being provided as part of the equipment shall be free of known hazardous materials. These materials shall not be brought on site without prior approval of the Government. Radioactive materials or instruments capable of producing ionizing radiation as well as materials which contain asbestos, mercury, lithium, methylene chloride, lead (= or >0.06%), or polychlorinated biphenyls (PCB's) are prohibited. Definitions of hazardous materials are specified in the latest version, including revisions adopted during the term of the contract, of FED-STD-313F. Nickel Metal Hydride and lithium batteries are permissible for memory backup. Class I Ozone Depleting Substances as defined in 40 CFR 82 shall not be used in the performance of this contract or be provided as part of the equipment. Exceptions to the prohibition of these materials must be referred to the Contracting Officer in writing, for consideration, not later than 60 calendar days after effective date of contract and prior to any work being performed.

3.1.6 Environmental Protection. Under the operating, service, transportation, and storage conditions described herein, the machine shall not emit materials hazardous to the ecological system as prohibited by Federal, State, or Local statutes in effect at the point of installation.

3.1.7 Lubrication. Means shall be provided to ensure proper lubrication for all moving parts in accordance with manufacturer requirements. All oil holes, grease fittings, and filler caps shall be easily accessible.

3.1.7.1 Recirculating Lubrication. When the machine is equipped with a recirculating lubrication system, it shall include a filter that is cleanable or replaceable. Each lubricant reservoir shall have at least a 24-hour capacity. Means shall be provided to indicate a low lubrication condition. When a low lubrication condition occurs, the machine shall complete the current operation and come to a complete stop. The machine shall indicate that lubrication is required.

3.1.8 Replacement Parts. All parts subject to replacement shall be manufactured to definite dimensions and tolerances. Replacement parts shall be interchangeable without requiring modification. Replacement parts are those that are subject to wear or failure such as gears, bearings, shafts, feed screws, drive belts, pumps, and seals. Electrical replacement

parts shall include but not be limited to, motors, relays, fuses, switches, magnetics, pushbuttons, light bulbs, braking mechanisms, and solid-state devices. Tooling and accessories normally supplied as standard items shall also be considered replacement parts. Foreign-sourced replacement parts shall either be interchangeable with domestically supplied components or be readily available from a domestic source. The contractor shall have a local Japanese dealer network that provides maintenance services and repair parts.

3.2 Construction. The machine shall be constructed of parts that are new, without defects, and free of repairs. The structure shall withstand all forces encountered during operation of the machine to its maximum rating and capacity without distortion.

3.2.1 Castings and Forgings. All castings and forgings shall be free of defects, scale, and mismatching. No processes such as welding, peening, plugging, filling with solder or paste shall be used for reclaiming any defective part.

3.2.2 Fastening Devices. All screws, pins, bolts, and other fasteners shall be installed to prevent unintentional loosening. Fastening devices subject to removal or adjustment shall not be permanently installed.

3.2.3 Threads. All threaded parts used on the machine and its related attachments and accessories shall conform to FED-STD-H28B and the applicable "Detailed Standard" section referenced therein or equivalent ISO/EN/DIN/JIS standards. At the time of proposal, the vendor shall indicate which document they will utilize for compliance to the requirements.

3.2.4 Hydraulic System. Under the condition that a machine has a hydraulic system, the system shall conform to ISO 4413 or current equivalent EN/DIN/JIS standards. At the time of proposal, the vendor shall indicate which document they will utilize for compliance to the requirements. The system shall be complete, including all pumps, valves, piping, cylinders, pressure controls, and secondary containment.

3.2.5 Pneumatic System. Under the condition that a machine has a pneumatic system, the system shall conform to ISO 4414 or current equivalent EN/DIN/JIS standards. At the time of proposal, the vendor shall indicate which document they will utilize for compliance to the requirements. The system shall be complete, including all pumps, valves, piping, cylinders, and pressure controls. A machine that does not require a pneumatic system to operate properly shall be considered acceptable.

3.2.6 Gears. All gears of axis drive trains shall conform to or exceed all provisions of EN/DIN/JIS standards. At the time of proposal, the vendor shall indicate which document they will utilize for compliance to the requirements. All gears shall be of proper width and size to transmit full-rated torque and horsepower throughout the speed ranges without failure for the expected service life of the machine. Gears in drive trains shall be hardened and ground steel.

3.2.7 Surfaces. All surfaces shall be clean and free of harmful or extraneous materials. All edges shall be either rounded or beveled unless sharpness is required to perform a

necessary function. The condition and finish of all surfaces shall be in accordance with the manufacturer's commercial practice.

3.2.8 Welding, Brazing, or Soldering. Welding, brazing, or soldering shall be employed only where specified in the original design. None of these operations shall be employed as a repair measure for any defective part.

3.2.9 Painting. The machine shall be painted in accordance with the manufacturer's commercial practice. All paint shall be of the lead-free type.

3.2.10 Workmanship. Workmanship of the machine shall meet all requirements specified herein and shall be of a quality equal to that prevailing among manufacturers producing equipment of the type covered by this purchase description.

3.3 Components. The machine shall consist of not less than the following components:

3.3.1 Base. The base shall be a stress relieved, heavy duty, ribbed casting or steel weldment having characteristics that minimize both thermal and vibration effects, while providing the strength and size to assure maximum rigidity and support for any load within the rated capacity of the machine. Means shall be provided for accurate, ease of leveling.

3.3.2 Table. The worktable shall be a casting of iron, or iron alloy, internally ribbed and proportioned to support and withstand the maximum capacity work-piece weights and slide thrust loads. The bed surface shall be provided with T-slots that meet JIS B 0952.

3.3.3 Bed Plate. The bed plate shall be steel plate fabricated in accordance with Government Drawing A. The bed plate shall be replaceable and fixed to the bed. The bed plate surface shall be machine finished for a work mounting surface.

3.3.4 C-Frame. The C-Frame shall be a heavy duty, ribbed casting or steel weldment to withstand the thrust forces. The C-Frame shall provide continuous space in three directions: front, left, and right of the workspace.

3.3.5 Slide. The slide shall be provided with an upper die holder and an upper die in accordance with Government Drawing A. the bottom surface of the slide shall be provided with T-slots that meet JIS B 0952.

3.3.6 Cylinder. Cylinders shall be provided to apply thrust force to slide and maintain the straightness of the slide movement. Four (4) guides shall be provided to make the cylinder movement straight.

3.3.7 Electrical System. The machine shall conform to NFPA 79 or current equivalent ISO/EN/DIN/JIS/IEC standards. At the time of proposal, the vendor shall indicate which document they will utilize for compliance to the requirements. The existing source power available at the facility is 210 volt, 3-phase, 50 Hertz (Hz), 200 amps. The machine's electrical system shall be tolerant of fluctuation of ± 10 percent. The electrical system shall be complete, including any electrical transformer(s) that may be required to modify

the existing source voltage to the proper operating voltage of the equipment. A properly rated, and fused, single disconnect device with Ground Fault Circuit Interrupter (GFCI) shall be utilized on the machine with means of lockout in the off position only. If the required power needs of the machine exceed the available power supply, the contractor shall inform the customer of the required power needs and a time frame of when the upgraded power needs to be ready. This shall be resolved during the solicitation phase.

3.3.7.1 Electrical Enclosures. Construction of the electrical enclosures shall be in accordance with NEMA 250 type 12 or current equivalent ISO/EN/DIN/JIS/IEC standards and shall provide for ventilation of components and shall be designed for an indoor non-hazardous location. All electrical components shall conform to NFPA 79 or equivalent ISO/EN/DIN/JIS standards. The machine shall be provided with interlocks on its electronic cabinet that shall instantly remove power from the equipment when the door is opened in accordance with NFPA 79 or current equivalent ISO/EN/DIN/JIS/IEC standards. At the time of proposal, the vendor shall indicate which document they will utilize for compliance to the requirements.

3.3.7.2 Arc Flash Protection. The machine enclosures shall be marked for arc flash in accordance with NFPA 79 Paragraph 16.2.3 “Safety Signs for Electrical Enclosures” or current equivalent ISO/EN/DIN/JIS/IEC standards for arc flash safety. At the time of proposal, the vendor shall indicate which document they will utilize for compliance to the requirements.

3.3.7.3 Solid-State Components. Electrical devices used to power electrical servo and spindle motors of control voltage delivered to solid-state electrical components shall be solid-state devices. Such devices shall be equipped to handle the electrical load imposed by operation of the machine to its maximum potential. The use of selenium in solid-state components shall be restricted to those devices that protect other solid-state components from voltage surge.

3.3.8 Control Features. Control features shall include inching with two-handed remote control, ascending, emergency stop, stepless thrust force control, and decent speed control. Single stroke and continuous stroke shall not be provided. A movable remote-control stand shall be provided with two-handed control inching buttons, single ascending button, emergency stop button, and 16 feet length signal wire contained in a flexible conduit. A function to switch the decent speed depending on the height of the slide shall be provided. The threshold height of the slide at which the descent speed changes shall be adjustable. When the slide is higher than the threshold height, and the descent speed when the slide is lower than the threshold shall be adjustable with in the ranges specified in Table 1 of paragraph 3.4. A vertical scale in the unit of inches shall be provided. Unless otherwise specified, control devices and indicators shall be installed at easily accessible positions on the C-Frame

3.3.8.1 Control Safety Features A braking system that will stop the slide movement when either of the operators’ hands leave the control button or when an abnormality occurs, to include loss of power or hydraulic pressure. An optical safety device shall be provided. Sensing light shall be emitted downward from an emitter mounted on the top of the C-Frame. The sensing light shall be limited to Class one lasers specified in JIS C 6802 or

light that is less invasive to the eye. A means shall be provided to temporarily disable the optical safety that is key activated. Emergency stop buttons shall be placed in easily accessible and visible locations. At least one on the remote-control panel, the front side of the slide, one each on each of the four (4) corners of the bed plate, and two (2) sides of the C-Frame column. The control shall automatically shut down when internal operating temperatures exceed safe operating limits.

3.3.9 Motors. Motors shall be rated for continuous duty. Alternating-current (AC) motors shall be designed to operate on 50-Hz and each motor enclosure shall meet the requirements for a drip-proof enclosure. All motors shall meet the requirements of NEMA MG-1 or current equivalent ISO/EN/DIN/JIS/IEC standards. At the time of proposal, the vendor shall indicate which document they will utilize for compliance to the requirements. Each motor shall have an identification plate in accordance with paragraph 3.7 to identify manufacturer, model number, serial number, voltage, amperage, horsepower, phase, frequency, and frame number. Motor horsepower shall be the manufacturer's standard or standard optional horsepower as indicated on the manufacturer's design and construction drawing(s).

3.3.10 Work light. A work light, whether built-in or added on, shall be provided. The light shall have a protective shield, flexible arm, and provide maximum light to the work area.

3.3.11 Facility Connections. Electrical connections made to the facility electrical system shall conform to NFPA 70 or JEAC 8001.

3.3.12 Hour Meter. The machine shall be equipped with a non-resetting type, hour meter to display accumulated operating time of the drive motor(s), mounted on the main electrical panel visible from the outside, sealed to prevent the entrance of dust and moisture, and shall be mounted to withstand shock and vibration generated by the machine. The meter shall have a range of 0 to 99,999.9 hours in increments of one (1) tenth of one (1) hour. A CNC control that tracks and displays total machine on time (a non-resetting type), controller on, program runtime, and run time of the servo motor(s) shall be considered to meet this requirement. The meter shall be sealed to prevent the entrance of dust and moisture and shall be mounted to withstand shock and vibration generated by the machine

3.4 Size and Capacity. The size and capacity of the machine shall be not less than specified in Table I.

Table I

Characteristic	**Specification**
Minimum thrust force	350 metric ton force
Allowable load eccentricity from the center of the cylinder	5.5inches
Dimensions of the bed plate	84inchesW x 59inchesD
Dimensions of upper die	1.9inches W x 59inches D

Throat depth from the center of the cylinder to the inside of C-Frame	51inches or more
Open height and stroke (from the top of the bed plate to the bottom surface of the upper die.)	14.7inches
Height of bed plate top surface from floor level	16+/- 0.5inches
Setting range of threshold height	0 to 14.7 inches
Setting range of descent speed	0.2 to 2.0 inches/sec
Ascent speed	2.0 +/- 0.5 inches/sec
Nominal width of T-Slots	22 mm
Pitch of T-Slots	250 mm

3.5 Alignment and Accuracy Tolerances. The alignment and accuracy tolerances of the machine shall be Class 3 of JIS B 6403 or better.

3.6 Standard Tooling and Equipment. All standard tooling and equipment required for proper operation and maintenance of the machine shall be provided. A list of these items shall be furnished at time of proposal.

3.7 Marking on Instruments, Control Panels, and Plates. All words on plates for guidance of operation and maintenance shall be in the Japanese language. All words on safety labels and stickers shall be in the English and Japanese language. Characters shall be engraved, etched, embossed, or stamped in boldface on a contrasting background. All plates shall be corrosion resistant. All words on plates shall be in the English language. Characters shall be engraved, etched, embossed, or stamped in boldface on a contrasting background. All plates shall be corrosion resistant.

3.7.1 Lubrication Plate. A lubrication plate shall be permanently and securely attached to each machine. The plate shall contain the following information.

Points of Lubricant Application
Servicing Interval
Type of Lubricant
Viscosity
Military or Federal Specification for Each Lubricant (If available)
Size and Type of Each Lubricant Filter

3.7.2 Nameplate. A nameplate shall be permanently and securely attached to each machine. The nameplate shall contain the information listed below. If the machine is a special model, the model designation shall include the model number of the basic standard machine and a suffix identified in the manufacturer's permanent records. All words on the nameplate shall be in the English language.

- Nomenclature
- CAGE Code
- Manufacturer’s Name

- Manufacturer's Model Designation
- Manufacturer's Serial Number
- Power Input (Volts, Total Amps, Phase, Frequency)
- Contract Number
- Date of Manufacture
- Full-load current for each supply
- Ampere rating of the largest motor or load
- Short-circuit current rating of the industrial control panel
- Max ampere rating of short-circuit and ground fault protective device, where provided
- Electrical diagram number(s) or number of the index to the electrical drawings

3.7.3 Identification Marking of Military Property. An Item Unique Identification Marking (IUID) shall be provided in accordance with MIL-STD-130N and all applicable documents within the standard with Machine Readable Information (MRI) for item identification marking and automatic data capture. The application of Human Readable Information (HRI) shall be used in combination with MRI and free text. At a minimum this tag shall contain the information listed in paragraph 3.7.2 Nameplate.

3.8 Technical Data. Three (3) hard copies and one (1) electronic copy(s) of technical data shall be provided with the machine. Technical data shall contain specifications, instructions for the operation, maintenance of the machine, lifting plan, as-built drawing of the whole installation site, SDS for all hazardous materials, non -pcb certification, and recommended spare parts list. All copies of technical data shall be legible and written in the English and Japanese language.

3.8.1 Plan of Action and Milestones (POA&M). The contractor shall provide a POA&M to identify contractor performance dates of all major events from contract award to completion of all contract requirements. The initial POA&M shall be delivered thirty (30) calendar days After Contract Award (ACA). The milestones shall be prepared using a recognized project management technique (preferably Microsoft Project). The Government and the contractor shall review the report on a monthly basis. The contractor shall notify the Government prior to making any changes to the POA&M. All changes to the POA&M shall be approved in advance by the Government. The POA&M shall detail such items as engineering, procurement of major hardware, assembly, operational debug, factory acceptance, shipment, installation, training, and final acceptance test.

3.8.2 Acceptance Test Plan (ATP). The Contractor shall prepare an Acceptance Test Plan (ATP). The ATP shall be a step-by-step written instruction on how to verify compliance during Contract Quality Assurance Inspection and the Final Inspection/Acceptance Test specified in Sections 4.4 and 4.5. The Contractor shall develop and provide dimensioned drawings of the proposed test part specified in Paragraph *4.7.3*. The Manufacture's standard testing procedures shall be included in the ATP. Any procedures necessary for compliance with Section 4, which are not covered by the Manufacturer's standard testing procedures, shall be identified and included in the ATP. The initial ATP shall be submitted

thirty (30) calendar days ACA for Government review and approval. The accepted test procedures shall become part of this contract.

3.9 Installation. The contractor shall provide complete installation services of the machine to include, but not limited to, transportation of the machine, full foundation, qualified personal and equipment for offloading, rigging, placing the machine on the foundation, all materials and tools for installation and anchoring to the foundation, leveling and connecting to utilities. The contractor shall comply with NAVFAC P-307. The contractor shall supply all equipment necessary to complete the tasks listed above to include all lifting and/or excavation equipment. The contractor shall refer to Government Drawing A for the available installation area. (no fixed components shall be installed in positions that interfere with being accomplished) The contractor shall follow the customers hours of operation; 8:00 am to 4:45 pm (excluding 12:00 to 12:45pm), Monday thru Friday excluding all national, unless informed otherwise. In the event work needs to be performed outside of the customers normal hours of operation, the contractor shall request a change no less than

3.9.1 Foundation The contractor shall be responsible for all of the qualified personnel and machinery for demolition and removal of the existing foundation and installation of the new foundation. The contractor shall be responsible for testing the soil for hazardous materials. When it is determined that hazardous materials have been found, the Government shall be responsible for the disposal of the soil. When no hazardous materials are present then the contractor shall remove and dispose of the soil. The Government shall be responsible for providing a water table determination prior to foundation construction.

3.9.1.1 Geotechnical Survey. The contractor shall perform a geotechnical survey to determine if and where there are any hidden utilities in the location of the current foundation. The contractor shall provide a copy of the completed survey to DLA.

3.9.1.2 **Lead and Asbestos Testing**. The Contractor shall be responsible for conducting an onsite survey for Lead Based Paint (LBP) and Asbestos Containing Material (ACM).–The onsite survey shall be completed within ninety (90) calendar days ACA; coordinate with the Contracting Officer. The facility has a known presence of LBP and ACM. A local accredited Asbestos Inspector shall perform the onsite survey for Lead and Asbestos to identify any suspected material that appears to be involved in the project. Assume the presence of asbestos and lead paint is a possibility and be prepared to do some sampling and analysis. Provide a signed report certifying the inspection. State the findings of the inspection and state if the area appears to be asbestos free or present the results of the sampling and analysis. The report shall be certified by the Asbestos Inspector and include the Inspector's certification number. Show locations of any samples taken in the report and on the Installation Plan. If either of these two substances are found in areas that will be disturbed by the Installation, and will pose a health and safety threat, the contractor must notify the contracting officer. The contractor is not required to remove or abate the lead and asbestos under this contract.

3.9.2 Work Stoppage. For unforeseen issues that are found during installation of the foundation, the contractor shall notify the facility point of contact (POC) and DLA immediately to determine further course of action.

3.10 Training. After satisfactory completion of acceptance testing of the system, the services of a qualified representative(s), who is proficient in the Japanese language, shall be provided for specialized training to familiarize Government personnel with the equipment and to help ensure reliable performance and maximum service life, during normal usage. The training shall be for five (5) operators. Training shall be performed at the Government facility and shall not be less than five (5) consecutive eight (8) hour workdays, between 8:00 am and 4:45 pm excluding weekends and federal holidays. The course shall utilize as-built drawings and manuals provided under this contract and shall include both classroom and hands-on portions. All printed training aids shall be supplied for the course, be in the Japanese language, and become the property of the Government.

4.0 QUALITY ASSURANCE.

4.1 Responsibility for Inspection. The contractor shall be responsible for the performance of all inspection requirements specified herein and in accordance with the attached Quality Assurance Provision (QAP). Except as otherwise specified in the contract or purchase order, the contractor may use his own facility for the performance of the inspection requirements specified herein, unless disapproved by the Government. The Government reserves the right to witness any inspections set forth in the purchase description where such inspections are deemed necessary to assure supplies and services conform to prescribed requirements.

4.1.1 Responsibility for Compliance. All items must meet all requirements of sections 3 and 4.

4.2 Classification of Inspections. The inspection requirements specified herein are classified as follows:

a. Contract quality assurance inspection (Origin) (see 4.4).

b. Final Inspection/Acceptance test (Destination) (see 4.5).

4.3 Inspection Conditions. All inspections, tests, and examinations shall be performed in an indoor facility with ambient temperature conditions in the range of 55° F to 100° F and 10% to 95% relative humidity.

4.4 Contract Quality Assurance Inspection (Origin). Contract quality assurance inspection shall be applied at the contractor's facility prior to being offered for acceptance under the contract. The machine and all peripheral equipment added to the machine shall be fully assembled and perform all functions in accordance with this specification. Quality conformance inspection shall consist of the examination in 4.6 and the tests in 4.7. The machine shall pass the examination, all tests, and contract quality assurance inspection to be acceptable for shipment.

4.4.1 Exception to Final Inspection/Acceptance Test (Destination). The audible noise level test in paragraph 4.7.4 shall be performed at origin inspection only.

4.5 Final Inspection/Acceptance Test (Destination). Final Inspection and acceptance test shall be performed on the machine to ensure conformance with this purchase description. The acceptance test shall be performed only after the machine is installed at its final location. The acceptance test shall consist of the examination in 4.6 and all tests in 4.7. The machine shall pass the examination and all tests to be accepted.

4.6 Examination. The equipment shall be examined for design, dimensions, construction, materials, components, electrical equipment and workmanship to determine compliance with the requirements of this specification.

4.7 Tests. Unless otherwise specified within this document, all programs, instruments, materials, material handling equipment, qualified personnel, and tools required to perform and evaluate the tests shall be furnished by the contractor. All measurement tools and indicating devices shall be calibrated in accordance with the attached QAP. If a malfunction occurs during the test, the test shall be restarted each time until all tests in 4.7 are completed without a malfunction. Three (3) consecutive failures without completion of the test may be considered cause for rejection of the system. For the purpose of this test, a "failure" is defined as any equipment malfunction which requires remedial action to restore the system to full operation in accordance with this specification

4.7.1 Alignment and Accuracy Tests. Tests shall be conducted to ensure the machine meets the alignment and accuracy tolerances specified in paragraph 3.5. The machine repeatability and accuracy for slide motions, descent speed changes, and auxiliary functions shall be checked.

4.7.2 Operational Test. The machine shall be operated under CNC at no-load for not less than four (4) hours. During operational testing the control functions and machine response to commands for slide motions, feed rate changes, and auxiliary functions shall be checked. The machine shall be run in each mode of operation to test the machine's response to command inputs. Three (3) failures in a row to complete the run test may be cause for rejection of the entire system. After successful completion of the operational test, proper operation of all controls, motors, adjusting mechanisms, over-travel limits (programmed stops and hard stops), emergency stop devices, and accessories shall be verified. The safety limit stops shall be checked by attempting to exceed the limits of travel of each moving axis.

4.7.3 Performance Test. A test piece shall be pressed slowly up to the maximum thrust force in paragraph 3.4, table 1.

4.7.4 Audible Noise Level Test. The equipment shall be tested for compliance with paragraph 3.1.4. "Audible Noise Level".

Enclosure 1

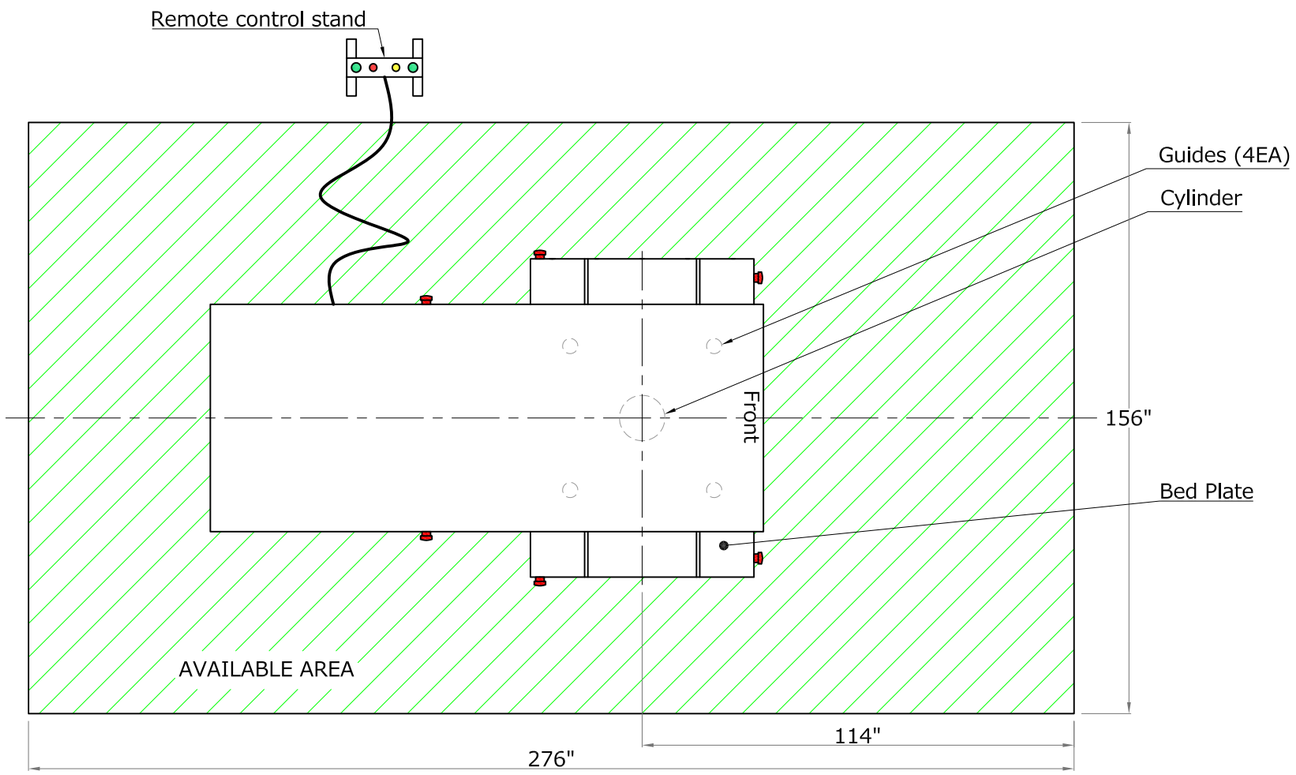

Notes
1. Unless otherwise specified, allowable tolerances are ±5%.

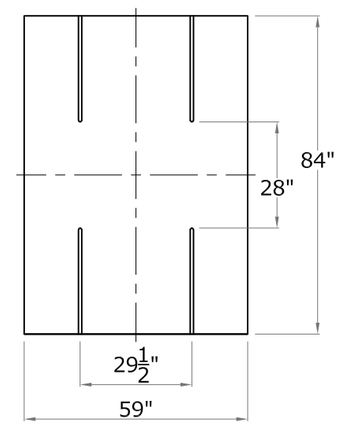

Bed Plate

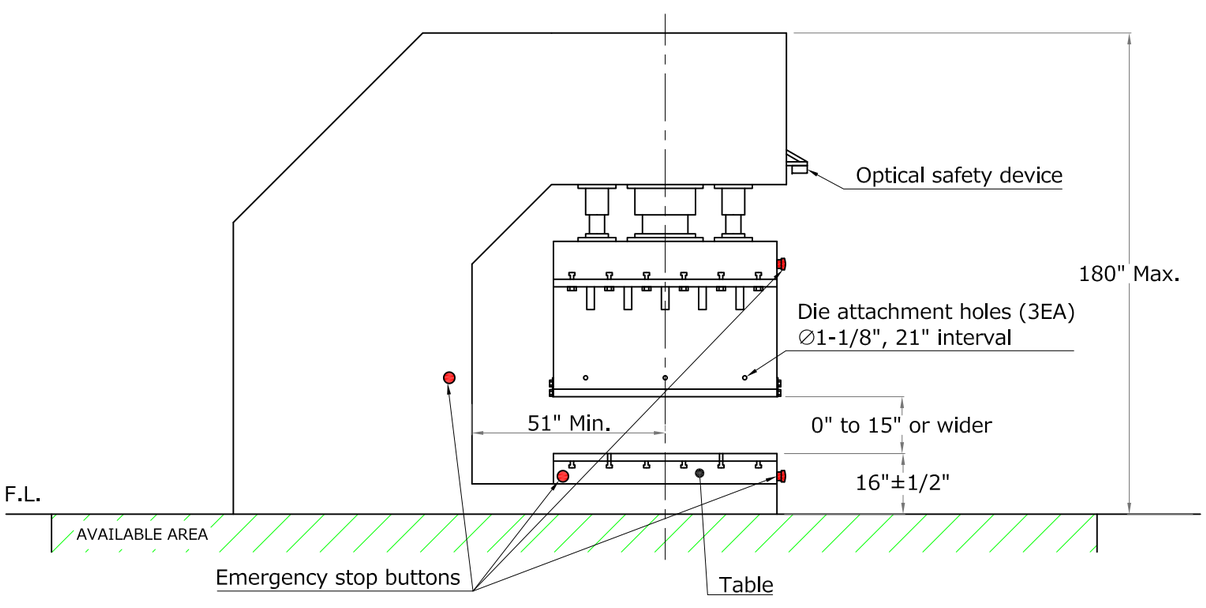

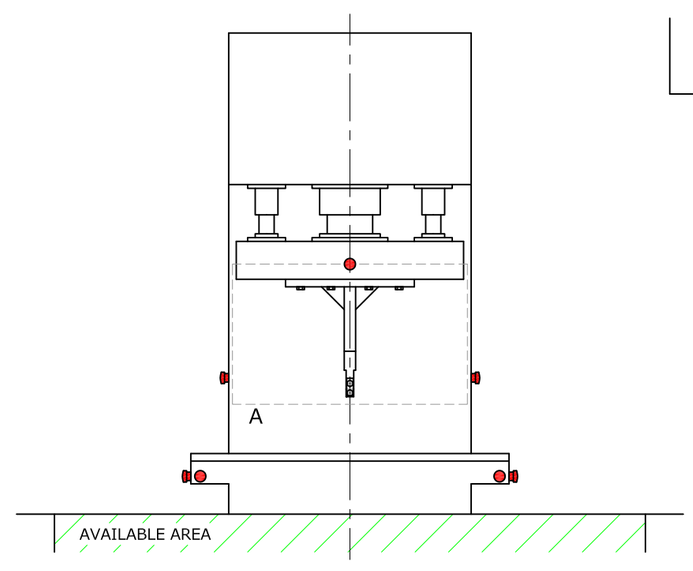

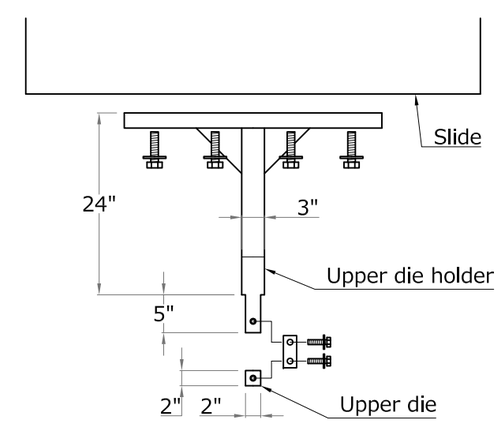

Detail A
Slide and Upper Die

24-25-2002
25-Jul-2024

INSTALLATION RESPONSIBILITIES

Government	Contractor	
☐	☒	a. Provide machine foundation in accordance with the Manufacturer's design requirements.
☐	☒	b. Furnish labor and material handling equipment for off-loading and placing item on foundation.
☐	☒	c. Provide and install anchor bolts and nuts.
☐	☒	d. Set and rough level the machine on its foundation
☐	☒	e. Level and align machine.
☐	☒	f. Connect machine to the provided utilities hook-up.
☐	☒	g. Provide all necessary tools, gages, and instrumentation necessary to perform the required tests.
☐	☒	h. Provide and charge all systems with fluids in accordance with manufacturer's instructions.
☐	☒	i. Material for performance testing at Government facility
☐	☒	j. Material for performance testing at Contractor's facility
☐	☒	k. Material handling, Rigging equipment and Qualified Personnel for performance testing.

GOVERNMENT RESPONSIBILITIES

☒ Provide utilities hook-up within 20 feet of the machine.

☒ No work shall be performed by customer personnel when the contractor's representative is not in the immediate work area during installation, verification, and initial start-up of the machine.

3.0 REQUIREMENTS.

Comply **3.1 Design.** The item offered shall be new and a current commercially available model. A current model is defined as the manufacturer's currently produced model which, on the date this solicitation is issued, has been designed, engineered, sold or is being offered for sale through advertisements or manufacturer's published catalogue or brochures. Products such as a prototype unit, pre-production model, or experimental unit do not qualify as meeting the requirements specified herein. The machine shall include all components, parts, and features necessary to meet the performance requirements specified herein. All parts subject to wear, breakage or distortion shall be accessible for adjustment, replacement, and repair.

Comply **3.1.1 Measuring and Indicating Device Graduations.** All measuring and indicating devices on the machine shall be graduated in the United States customary units. An electronic control system that demonstrates switching between manufacturer standard units to United States customary units will be found acceptable.

Comply **3.1.2 Controls.** All electrical, mechanical, hydraulic, and pneumatic operating controls shall be located convenient to the operator's workstation(s). Controls shall be within reach and located such that the operator, when in the normal operating position, is not required to reach past moving parts, which may cause injury.

3.1.3 Safety and Health Requirements. All machine parts, components, mechanisms, and assemblies furnished on the machine, whether or not specifically required herein, shall comply with all of the requirements of OSHA 29 CFR 1910 and OPNAV 5100.23 or equivalent ISO/EN/DIN/JIS standards. At the time of proposal, the vendor shall indicate which document they will utilize for compliance to the requirements.

3.1.3.1 Safety Devices/Guarding. Covers, guards or other safety devices shall be provided for the point of operation and all other parts of the machine that present safety hazards. The safety devices shall not interfere with the operation of the machine. All automatic powered doors shall have a mechanical device to keep them open and or close position during maintenance procedure and or inspections. All safety devices shall prevent unintentional contact during normal operations, shall be removable to facilitate the

DLA AVIATION QUALITY ASSURANCE PROVISION (QAP) 175 February 2020

1. MANDATORY CONTRACTOR INSPECTION SYSTEM:

The inspection system identified in FAR clause 52.246-2, Inspection of Supplies - Fixed Price, applies. This inspection system shall, as a minimum, encompass all tests and examinations specified in paragraph 3 below. Records of all these examinations and tests shall be maintained by the contractor for a period of at least three years after final contract delivery.

2. CALIBRATION REQUIREMENTS:

Contractor's inspection and test equipment utilized in determining conformity of supplies with contract requirements shall have a current valid calibration traceable to the National Institute of Standards and Technology (NIST). This calibration is to have been performed within the established calibration intervals, not to exceed 12 months, unless the contractor maintains sufficient documented records proving continuing accuracy and control throughout the established interval.

NOTE: Contractor shall establish a calibration system in accordance with the edition of ANSI/NCSL Z540.3, dated 2006-08-03. NOTE: ISO 10012 dated 2003-04-15 shall be implemented for foreign Supplies.

3. INSPECTION AND TEST:

a. The contractor shall perform or have performed all inspections and tests required and as governed by drawings, specifications and standards cited elsewhere in this contract to insure total compliance to contract requirements.

b. Visual/Dimensional Inspections: Any departure from a specified requirement shall be classified as a defect. Any defect shall be cause for rejection of the entire shipment quantity.

c. Manufacturing Process Controls and In-Process Inspections:

The contractor shall:

(1) Ensure that all manufacturing operations are carried out under controlled conditions which will adequately assure that product characteristics and criteria specified by contract are achieved and maintained in the produced item. Controlled conditions include documented process control and in-process inspection procedures, adequate methods for identifying and handling material, adequate production equipment and working environments. Inspection procedures used by the contractor to determine quality conformance of supplies shall be subject to review/approval by the Government.

(2) As a minimum, perform inspections, examinations and/or tests during manufacturing on those product characteristics which cannot be inspected at a later stage and ensure that process controls are implemented and effective. These examinations and/or tests shall be documented.

d. End Item Tests: Failure of any unit to pass any test shall be cause for rejection of the entire shipment quantity.

e. Examination of Preparation for Delivery: An examination of preservation, packaging, packing and marking shall be performed to determine compliance with contract requirements. Any non-compliance with contractual requirements shall be cause for rejection of the entire shipment quantity.

f. Any defective item discovered by the Government after shipment may be cause for rejection of the entire contract quantity.

g. For items b, d, e, and f above: The contractor shall be afforded the opportunity to remedy the defect prior to rejection.

4. INSPECTION/ACCEPTANCE:

a. Contract Quality Assurance (CQA): CQA Inspection shall be predicated upon the contractor's successful completion of all inspection, examinations and tests required by the contract and applicable specifications. The DLA AVIATION Quality Assurance Office will provide a Quality Assurance Specialist (QAS) to participate in CQA Inspection at the contractor's plant.

b. Acceptance: Final inspection and acceptance at destination shall be predicated upon the contractor's successful completion of all tests required by the contract and applicable specifications. DLA AVIATION shall provide a QAS to witness all tests as performed by the contractor and conduct any other tests as deemed necessary within the scope of the contract and applicable specifications.

c. Coordination: The contractor shall coordinate with The Procurement Contracting Officer (PCO) on all matters concerning the quality requirements of this contract or the monitoring thereof, including the performance of CQA. Inspection and acceptance shall be coordinated through the DLA AVIATION Procurement Contracting Office.

d. Contractor Notification Requirements: The contractor shall notify the PCO at DLA AVIATION when the item(s) are ready to present to the Government for inspection and/or acceptance as follows:

(1) Origin: fifteen (15) business days advance notification to DLA AVIATION is requested for inspection.

(2) Destination: DLA AVIATION requests to be afforded fifteen (15) business days advance notification from the date the item(s) are ready for final inspection and acceptance at destination, and three business days advance notice if the item(s) fail the contractor's Quality checks on site and will not be ready as first requested. NOTE: All federal holidays and weekends are excluded as business days.

Inspection: Origin Acceptance: Destination

Addendum to 52.212-2 Evaluation – Commercial Items

SECTION L
INSTRUCTIONS TO OFFERORS
Addendum to FAR 52.212-1

L.1.0 General: The following instructions are a guide to facilitate the preparation and submittal of the Offeror's quote for this solicitation. Non-conformance with any instructions provided below may result in the quote being determined unacceptable. The quote should contain sufficient information to enable the evaluators to determine that the Offeror understands each requirement.

L.1.1 Objective: The intent of this source selection process is for the Government to make an award to the Offeror who provides the best value to the Government based on the results of the evaluation as described in Section 3. The Government intends to award without discussion or negotiation based on offeror's quote received in response to the Request for Quotation (RFQ, also referred to as "solicitation"). Discussions, if necessary, will be conducted after technical review is completed. Discussions will not be held with unacceptable Offerors.

L.1.2 Quote Format: Quotes not structured in accordance with the following instructions may be considered incomplete, may not be evaluated, and may be returned at the Offeror's expense. Each page containing proprietary information should be marked. Furthermore, each page should include the following in the footer, "SOURCE SELECTION INFORMATION—SEE FAR 2.101 AND 3.104-- Controlled Unclassified Information." Quotes shall be submitted in the following format:

Quote Requirement		Format	Number of copies
I	Completed RFQ with All Pricing	Hard copy/electronic copy, original	1
II	Completed RFQ without Pricing	Hard copy (1) /electronic copy (1), original	2*
III	Technical Compliance & Descriptive Literature	Hard copy (1) /electronic copy (1); both unpriced	2*
IV	Past Performance Questionnaire and list of five recent contracts	Hard Copy/electronic copy list of five recent contracts and list of companies to whom Past Performance Questionnaire were provided and Point of Contact information for each company.	1
V	Price Support (Other Than Certified Cost & Price Data)	Hard copy/electronic copy of Commercial price list and two invoices reflecting sales of same/similar items to other commercial customers (Refer to FAR 52.215-5-20 & 52.215-21 incorporated into solicitation)	1
VI	Subcontracting Plan (required for quotes $750K and above from large business	Hard copy/electronic copy; Refer to FAR 52.219-9	1

*Note: If offers are submitted electronically, only ONE copy of the unpriced RFQ and unpriced technical data is required.

Addendum to 52.212-2 Evaluation – Commercial Items

L.2.0 Preparation & Content: The information is expected to be simple and economical, clear, legible, specific, and complete as described in the instructions. Furthermore, it should contain only pertinent information presented in a logical and coherent manner to provide a straightforward and concise description of the technical data and ability to perform. Offerors shall assume the Government has no prior knowledge of their facilities or experience and will base its evaluation on the information presented in the quote. All packages (electronic or hard copy) should be clearly labeled on the front cover of each section to identify the Offeror's name, solicitation number, and title (i.e., Technical Compliance, Copy 1). The use of three-ring binders, spiral-bound booklets or elaborate formats is discouraged.

L.2.1 Completed RFQ: All Offerors are required to return a complete, signed copy of the Government's RFQ, technical quote, and completed supporting documents* by the closing date and time listed in the solicitation. The offeror may submit their proposal utilizing one of the methods listed below:

A. **DLA Internet Bid Board System (DIBBS)**
   Offers may be submitted directly to the solicitation via DIBBS with priced proposals, unpriced proposals, other supporting documentation, and technical documents as separate attachments. Offers submitted via DIBBS may be found online at https://www.dibbs.bsm.dla.mil/default.aspx.

B. **Mail Service (UPS, FEDEX, ETC.)**
   Offers may be submitted by mail. Offers may be mailed to ATTN: Christina Gibbs/ BLDG 32L DLA Weapons Support, Mail Room Building 210, 6090 Strathmore Road, Richmond, VA 23237-5002.

C. **Email**
   Offers may be submitted by email with priced proposals, unpriced proposals, and technical documents as separate attachments. Offers submitted via email may be sent to Christina.Gibbs@dla.mil (or Christina.Petrone@dla.mil if other is rejected).

LI. Note: An exception may be made for the Past Performance Questionnaire because it must be submitted by a third party and is outside of the direct control of the offeror. However, the Offeror must provide the company name and point of contact information of all parties to whom the past performance questionnaire was sent.

L.2.2 Summary Sheet: A summary sheet or cover letter identifying any exceptions taken to the solicitation terms and conditions is required. Offerors are cautioned that any noncompliance with the terms and conditions of the solicitation may cause their quote to be determined unacceptable.

L.2.3 Technical Quote: The quote shall be clear, concise, and include sufficient detail for effective evaluation and not simply rephrase or restate the Government's requirements. The quote should provide convincing rationale and demonstrate the Offeror's detailed approach to meeting the requirements. Technical quotes must include the following:

Addendum to 52.212-2 Evaluation – Commercial Items

L.2.3.1 Descriptive Literature – IPE

The technical requirements of the Purchase Description, Salient Characteristics or Statement of Work shall be addressed as follows:

A. "Descriptive literature" means information (e.g., cuts, illustrations, drawings, and original manufacturers' brochures) that is submitted as part of a quote. Descriptive literature is required to establish, for the purpose of evaluation and award, details of the product quoted that are specified elsewhere in the solicitation and pertain to significant elements such as (1) design; (2) materials; (3) components; (4) performance characteristics; and (5) methods of manufacture, assembly, construction, or operation. The term includes information required to determine the technical acceptability of the quoted product; it does not include other information used in determining the responsibility of a prospective contractor or for operating or maintaining equipment.

B. Data displaying more than one model or size shall be clearly marked to indicate the specific item being quoted.

C. Quotes which do not present sufficient information to permit complete technical evaluation by the Government may not be considered for award.

L.2.3.2 Indication of Compliance or Exception to Technical Requirements (COMPLIANCE STATEMENT)

The identical numerical sequence stated in the attached technical scope of work/product description must be used in the compliance statement. Each paragraph of the scope of work/ product description must clearly indicate a response with one of the following statements:

A. EXCEEDS - Where the offeror surpasses the requirement, a narrative description shall be provided.

B. COMPLY - Where the offeror meets the requirement the compliance statement should reflect comply. No narrative is required to be provided unless requested.

C. EXCEPTION TO - Where the offeror takes exception to the requirement, a narrative description shall be provided.

Offerors who do not provide sufficient technical data for evaluation (by the methods noted above); may be rejected without further consideration. The supplying of standard commercial literature shall not be construed as compliance unless it is complete in all details as to permit a technical evaluation in accordance with these instructions. Descriptive literature shall be written in English and all

dimensions, capacities, and ratings given in the US system of measurements. Information submitted other than as herein described will not be translated or converted by the Government to determine product conformance or acceptability.

L.2.4 Past Performance Data: The past performance evaluation is an assessment of the offeror's probability of meeting the minimum past performance solicitation requirements. This assessment is based on the offeror's record of relevant and recent past performance information that pertain to the products and/or services outlined in the solicitation requirements. The Government intends to collect and evaluate prior contract performance data to assess each Offeror's ability to supply the products and services required and the quality of the manufacturer's product quoted for this procurement. The Government may use any and all past performance data at its disposal in evaluating an Offeror's demonstrated record of performance. This may include review of contracts issued by any branch of the federal government, whether manual or electronic, past or present, and any commercial contracts identified by the Offeror. Offerors shall send a past performance questionnaire to five references on five separate contracts the Offeror has performed. Offerors shall provide a listing of five references to whom each past performance questionnaire was sent. Within the listing, the Offeror shall provide the applicable contract number, description of contract, contract start date, and period of performance. If the offeror's experience is not sufficient, the past performance information of any significant partner, joint venture, critical subcontractor, etc., may be submitted for consideration. All information must be for contracts performed within the last five years.

The information provided by reference is considered sensitive and shall not be released to the Offeror. All information is subject to verification by the Government during the evaluation. The Government reserves the right to contact the Government or commercial points of contact identified, or contacts for other contracts performed, for the purpose of verifying information concerning past performance and/or to obtain additional information.

Evaluation of the past performance surveys received will occur in accordance with Past Performance as addressed in section M 1.2.

The government will use all past performance data at its disposal in evaluating the quality of the quoted product to determine the best value. Data collected from government or commercial sources on previously supplied same/similar manufacturing machines can be used to determine the product quoted is not satisfactory and determined not to be the best value.

L.2.5 Pricing Support. A quantity of two (2) Commercial invoices reflecting the same/similar item that has been sold to other commercial customers is requested to be provided with quote.

SECTION MEVALUATION
Addendum to FAR 52.212-2

M 1.0 Source Selection Process: Offers shall be evaluated utilizing the Lowest Price Technically Acceptable (LPTA) source selection process. This process determines the best value to the Government to be the lowest priced quote that is determined to be acceptable in all non-

Addendum to 52.212-2 Evaluation – Commercial Items

price factors, which consists of technical and past performance. Quotes that are determined acceptable for both the technical and past performance factors will be determined technically acceptable quote. Value is not recognized from a quote that exceeds the Government's technical or performance requirements.

M 1.1. Technical Review Rating. The technical review determines whether the offer will satisfy the Government's requirements. All responsive Offerors will have their non-priced technical quotes evaluated to determine if they demonstrate a thorough knowledge and understanding of the technical requirements, as well as provide a sound, compliant approach to executing all areas of performance. The following ratings will be used:

Technical Rating	Description
Acceptable	Quote clearly meets the minimum requirements of the solicitation.
Unacceptable	Quote does not clearly meet the minimum requirements of the solicitation.

M 1. 2 Past Performance, Experience, and Quality Rating. The offeror's present/past performance experience shall be evaluated to assess the offeror's probability of meeting the proposed contract requirements. If the offeror's experience is not sufficient, the present/past performance experience of any significant partner, joint venture, critical subcontractor, etc., who will be performing the proposed contract and the subsequent performance under the similar contract shall be evaluated as equal to the experience of the prime offeror. The Past Performance evaluation considers the offeror's demonstrated recent (i.e. currently ongoing or completed within the last five calendar years from the solicitation open date) and relevant record of performance in supplying services and products that are the same or similar in scope, complexity and magnitude (i.e. same/similar product, dollar value, volume) to the requirements of the solicitation.

M 1. 2.1 Relevancy and Confidence Assessment. The following acceptable/unacceptable ratings shall be used in the Past Performance evaluation:

Past Performance Acceptable/Unacceptable Rating Method

Past Performance Rating	Description

Addendum to 52.212-2 Evaluation – Commercial Items

Acceptable	Based on the offeror's performance record, the Government has a reasonable expectation that the offeror will successfully perform the required effort, or the offeror's performance record is unknown.
Unacceptable	Based on the offeror's performance record, the Government does not have a reasonable expectation that the offeror will be able to successfully perform the required effort.

M 1. 2.2 In the case of an offeror without a record of relevant past performance or for whom information on past performance is not available or so sparse that no meaningful past performance rating can be reasonably assigned, the offeror may not be evaluated favorably or unfavorably on past performance (see FAR 15.305 (a)(2)(iv)). Therefore, the offeror shall be determined to have unknown (or "neutral") past performance. In the context of acceptability/unacceptability, a neutral rating shall be considered "acceptable."

M 1. 3 Price Reasonableness/Support. All responsive, technically acceptable quotes will be evaluated for Price Reasonableness. Unreasonably low or high proposed prices, initially or subsequently, may be grounds for eliminating a quote from competition. Price Reasonableness will be evaluated as follows. Adequate price competition is expected to support the determination of reasonableness. Price analysis techniques using Commercial invoices submitted under Section L.2.4 may be used to further validate price reasonableness. If adequate price competition is not obtained or if price reasonableness cannot be determined using price analysis additional information, including cost information, may be required to support the proposed price using cost analysis.

.

SPE4A8-26-Q-0043
Past Performance Questionnaire

*RETURN DIRECTLY TO THE GOVERNMENT PROCUREMENT OFFICE VIA EMAIL TO Christina.Gibbs@dla.mil (or Christina.Petrone@dla.mil if rejected). *

PERFORMANCE QUESTIONNAIRE

Defense Logistics Agency - Aviation is collecting past performance information on the company listed below as part of its best value determination on an active procurement. Please complete the evaluation and return directly to the Government. The information is considered sensitive and will not be released to the Offeror.

Company (Offeror) Name:_____

Address:_____

RATING SCALE: Please use the following ratings to answer the questions, by placing an "**X**" in the appropriate box. If you are unable to rate an item because it was not a requirement, never an issue, or you have no knowledge of the item in question, then you should mark "NA."

EVALUATION CRITERIA:

Exceptional - The Company's performance was consistently superior. Performance was entirely favorable and you wouldn't hesitate to do business with them again.

Very Good - The Company's performance was better than average, and you would willingly do business with them again. The contractual performance was mostly favorable and corrective actions, if any, that were taken by the contractor were effective.

Satisfactory - The Company's performance was adequate for the project and you would consider doing business with them again. There were minor performance problems which were corrected.

Marginal – The Company's performance was below average and you would be hesitant to do business with them again. There were some significant performance issues and the vendor had some difficulty taking corrective action.

Unsatisfactory – The Company's performance was entirely unsatisfactory and you would not do business with them again under any circumstances. There were serious performance issues with the contractor and the contractor's corrective actions were ineffective.

Neutral—No record exists.

FOR AREAS INDICATING EITHER EXCEPTIONAL OR UNSATISFACTORY PERFORMANCE, PLEASE PROVIDE AN EXPLANATION IN THE COMMENTS SECTION OF THE SURVEY.

QUALITY OF PRODUCT	Neutral	Unsatisfactory	Marginal	Satisfactory	Very Good	Exceptional
Provided a service that conformed to contract requirements, specs, and standards of good workmanship.						
Submitted accurate reports.						
Utilized personnel appropriate to the effort performed.						

COST CONTROL	Neutral	Unsatisfactory	Marginal	Satisfactory	Very Good	Exceptional
Performed the effort within the estimated cost/price.						
Submitted accurate invoices on a timely basis.						
Demonstrated cost efficiencies in performing the required effort.						

SPE4A8-26-Q-0043
Past Performance Questionnaire

*RETURN DIRECTLY TO THE GOVERNMENT PROCUREMENT OFFICE VIA EMAIL TO Christina.Gibbs@dla.mil (or Christina.Petrone@dla.mil if rejected). *

Actual costs/rates realized closely reflected the negotiated costs/rates.						
SCHEDULE	Neutral	Unsatisfactory	Marginal	Satisfactory	Very Good	Exceptional
Tasks were performed in a timely manner and within the period of performance of the contract.						
Contractor was responsive to technical and/or contractual direction.						

BUSINESS RELATIONSHIPS	Neutral	Unsatisfactory	Marginal	Satisfactory	Very Good	Exceptional
Demonstrated effective management over the effort performed.						
Maintained an open line of communication so that the Contracting Officer's Representative (COR) or technical POC were apprised of technical, cost, and scheduling issues.						
Presented information and correspondence in a clear, concise, and businesslike manner.						
Promptly notified the COR, technical POC, and/or Contracting Officer in a timely manner regarding urgent issues.						
Cooperated in providing flexible, proactive, and effective recommended solutions to critical program issues.						
Demonstrated effective management of its subcontractors						

CUSTOMER SATISFACTION	Neutral	Unsatisfactory	Marginal	Satisfactory	Very Good	Exceptional
Products/services adequately met the needs of the contract.						
Contractor was able to perform with minimal or no direction from the COR or technical POC.						
I am satisfied with the performance of the contractor.						
Expectation that we would award another contract to this firm.						

Was the contract terminated for default? [ ] Yes [ ] No. If you answered yes, provide an explanation:

_____

COMMENTS: (Required for all EXCEPTIONAL and UNSATISFACTORY ratings)

_____

SPE4A8-26-Q-0043
Past Performance Questionnaire

*RETURN DIRECTLY TO THE GOVERNMENT PROCUREMENT OFFICE VIA EMAIL TO Christina.Gibbs@dla.mil (or Christina.Petrone@dla.mil if rejected). *

TYPE OF EQUIPMENT/SERVICE PROVIDED: _____

MANUFACTURER/ MODEL NUMBER OF THE EQUIPMENT: _____

THIS EVALUATION WAS COMPLETED BY:

BUSINESS NAME:_____ **POINT OF CONTACT:**_____

ADDRESS: _____

PHONE: _____ **EMAIL:** _____

SIGNATURE: _____ **DATE:** _____

INFORMATION FOR OFFERORS REGARDING INSTALLMENT PAYMENTS:

The Government cannot provide down payments or progress payments on a contract for commercial equipment. However, the Government can provide Commercial Item Purchase Financing in accordance with Federal Acquisition Regulation (FAR) Part 32.2. If the FAR Clause 52.232-30, (Installment Payments for Commercial Items) is included in the solicitation and proper surety is provided by the offeror, the payments may be added to the contract.

Commercial installment payments are offered in accordance with agency procedures. Installment payments are the only method of payment or financing allowed by Defense Logistics Agency (DLA) Aviation for commercial supplies. Requests for other types of financing or advance payment will be denied.

FAR 32.202-4(a)(1) requires the contracting officer to obtain adequate security for Government financing prior to approving installment payments. The only type of adequate security accepted by this office is:

Performance and Payments Bonds for other than construction contracts (Refer to FAR Part 28.103-2 and -3). Forms SF 1416 and SF 1418 would be required and could be provided by the Acquisition Specialist upon request.

The Bonds would be required to be made payable to DLA Aviation and must be for the total contract amount and period of the contract. NOTE: If a contract amount increases additional financing security may be required.

Payments are only to be used for expenses incurred with completion of the subject contract.

Draft copies of the Bonds would need to be submitted to the Acquisition Specialist in order for Legal to review and determine adequate before final signatures and corporate seals are affixed. Additionally, if the representative that signs is an attorney-in-fact then evidence of authority to sign for that company must be provided as well.

Bonds must be issued by a FDIC approved company. A list is available at: https://www.fiscal.treasury.gov/
Click on A-Z Index and select S for Surety and choose Surety Bonds. Click on Certified Company list.

INFORMATION FOR OFFERORS REGARDING INSTALLMENT PAYMENTS CONTINUED:

Installment payments are limited up to 70 percent financing of **deliverable line items only**. Payments are only for tangible items (machine, tooling, technical data, IUID). The Acquisition Specialist will determine monthly installment payment amounts based on each individual deliverable line item. Payments will be allocated evenly over the entire contract performance period/completion date not to include 30 days prior to contract performance period/completion date. Payments are not automatic. A contractor must submit installment payment requests once every 30 days. Retroactive payments are not authorized. The remaining 30 percent of the contract balance will be paid after the Government accepts all supplies and services in accordance with contract terms and conditions, and the contractor submits a final invoice in accordance with contract payment procedure. For more information on submitting installment payment requests after award, you would contact the assigned DLA Post-Award Administrator.

Example breakout of payments is:

INSTALLMENT PAYMENT CALCULATION EXAMPLE Page 1

INSTALLMENT PAYMENT CALCULATIONS

CLIN	Item Description	Total Price	70% of Price	# OF PAYMENTS	Amount of Monthly Payment	Unpaid Balance
0001	*Machine*	*$137,744.29*	$96,421.00	7	13,774.4300$	$41,323.28
0002	*Tooling*	*$70,442.50*	$49,309.75	7	7,044.25$	$21,132.75
0006	*IUID*	*$500.00*	$350.00	7	50.00$	$150.00
Total Contract Value		**$208,686.79**	**$20,868.68**		**$62,606.03**	**$208,686.79**

x monthly payments =

$146,080.76

ITEMS NOT RECEIVING INSTALLMENT PAYMENTS

0003	Shipping	$8,853.80
0004	Training	$7,713.85
0005	Installation	$12,530.56
Total:	**$29,098.21**	Total CLINS not receiving payments: $29,098.21

Total Installment Payments	$146,080.76
Unpaid Balance of CLINS	$62,606.03
Total Contract Value:	**$237,785.00**

The Government recognizes a cost is associated with obtaining Bonds and it is an allowable cost that may be included to an offerors total proposal price as a separate line item. Should an offeror choose to include the cost it will be part of the evaluation of the total offered price.

To request installment payments, please submit a written request to the Acquisition Specialist with your offer and include the estimated cost of the Bonds. The chosen awardee of the contract will then be notified to submit a draft copy of the Bonds. A review will be completed by DLA Legal to determine if adequate for approval of installment payments. If it is not submitted until after the contract has been issued the awardee has 10 days after contract award to provide the security. Installment payments will not be authorized or incorporated into a contract until accepted by DLA Aviation Legal. If the payments are authorized after contract award a modification will be issued to the contract.
Any further questions please contact the Acquisition Specialist assigned to this Procurement.