St. Croix National Scenic Riverway

401 North Hamilton Street, St. Croix Falls WI 54024

Upgrade HVAC, Insulation, and Electrical at Magney Housing Unit
PMIS 350854

PROJECT SPECIFICATIONS

NATIONAL PARK SERVICE
2026-02-16

TABLE OF CONTENTS

DIVISION 01 - GENERAL REQUIREMENTS

Section 01 10 00 - Division 01 Short Form General Requirements

DIVISION 07 – THERMAL and MOISTURE PROTECTION
Section 07 21 27 Enclosed Cavity Foam Insulation

DIVISION 23 HVAC
Section 23 34 50 Bathroom Exhaust Fans
Section 23 81 26 Ductless Split System Air Conditioner

DIVISION 26 ELECTRICAL
Section 26 05 50 Wiring Methods

SITE PLAN – APPENDIX A

PHOTOGRAPHS – APPENDIX B

DRAWINGS – APPENDIX C

SECTION 01 10 00

DIVISION 1 SHORT FORM GENERAL REQUIREMENTS

PART 1 – GENERAL

ITEM 1 - DESCRIPTION OF WORK

1.1 Background: The Magney housing unit is a 2-bedroom 1-bathroom house roughly 1200sqft. The house was acquired by the NPS in 1977 and is currently utilized as a housing unit. The home is a poured concrete and block structure with LP smart siding and standing seam steel roofing. The building is in good general condition but requires some updates. Currently the house utilizes two window mount AC units for air conditioning. These units require installation and removal every year, are 10 plus years old, and allow rodent and insect intrusion. The current attic fiberglass batten insulation is inadequate and smashed down from access traffic, this results in loss of building efficiency. The electrical panel is believed to be original at least 49 years old and needs to be replaced to meet building codes and remove safety concerns. There is currently no bathroom fan/ventilation. This results in mold and mildew issues and complaints by tenants.

1.2 Work Covered by the Contract Documents:

A. Project Location: 23209 St. Croix Trail North, Scandia MN 55073

B. Work consists of:

A) Install New 3-Head Mini-Split HVAC System

a. Contractor to confirm equipment locations, structural conditions, electrical capacity, condensate routing, and verify heating and cooling load calculations.

B) Equipment & Materials

a. Furnish and install one high-efficiency outdoor heat pump unit, Mitsubishi MXZ-3D24NL or equivalent
   i. 22,000BTU Cooling capacity
   ii. 25,000BTU Heating capacity
   iii. 208/230V single phase
   iv. Install outdoor unit a minimum 18” above ground level and to all other manufacture standards. Refer to Appendix B and C.

b. Furnish and install three indoor wall mounted air handling units.
   i. One (1) ½ ton Mitsubishi MSZ-GX06NL or equivalent.
   ii. 5,500BTU Cooling capacity
   iii. 6,250 BTU Heating capacity
   iv. Wall Mounted in Bedroom A on North wall. Refer to Appendix B and C.
   v. One (1) ½ ton Mitsubishi MSZ-GX06NL or equivalent.
   vi. 5,500BTU Cooling capacity
   vii. 6,250 BTU Heating capacity
   viii. Wall Mounted in Bedroom B on North wall. Refer to Appendix B and C.

ix. One (1) 1 ton Mitsubishi MSZ-GX12NL or equivalent.
x. 11,000BTU Cooling capacity
xi. 12,500 BTU Heating capacity
xii. Wall Mounted in Living room on North wall. Refer to Appendix B and C.

c. Provide refrigerant line sets, control wiring, condensate drain lines, mounting brackets, and vibration isolation pads.

C) Installation

a. Install outdoor heat pump on approved pad or wall bracket with proper clearances.
b. Mount three indoor units securely and level per manufacturer specifications.
c. Run refrigerant lines, electrical wiring, and condensate drains between indoor and outdoor units.
d. Penetrations sealed and flashed to prevent water intrusion.
e. Install New dedicated 208-230V 60Hz electrical circuit and disconnect as required by manufacturer specifications.

D) Commissioning

a. Charge system with refrigerant.
b. Startup system and test all operating modes.
c. Balance airflow and verify proper operation of each indoor unit.
d. Provide owner orientation and manufacturer documentation.

2. Install New Bathroom Exhaust Fan

A) Pre-Installation

a. Provide power from new 15000amp panel board installed in the utility room as part of this scope of work. A new 15A circuit is to be provided unless the Contractor can demonstrate total load for bathroom electrical, inclusive of lighting and receptacles can incorporate exhaust fan on same circuit.
b. Provide new 4” ventilation duct from fan to exterior of the house including vent terminal. Reference appendix B and C.
c. Identify fan location with COR to ensure optimal moisture removal.

B)

a. Install new, 80CFM bathroom exhaust fan with light and Humidity Sensor. Broan BELS8 or equivalent.
    i. 80 CFM
    ii. LED light
    iii. 120v 21W
    iv. 1.5 Sones
    v. Built in Humidity Sensor
b. Connect fan to new electrical circuit with switch.
c. Install insulated ductwork vented to the exterior with backdraft damper.
d. Seal all duct connections to prevent air leakage.

C) Testing

a. Test fan operation, airflow, and noise levels.
b. Confirm proper exterior exhaust and damper operation.

3. Replace existing Square D XO 100 amps electrical service panel.

A) *Provide 150 amp NQ Circuit Breaker Panelboard as manufactured by Schneider Electric, or equal from approved manufacturers.*

   a. *Approved Manufactures*
      i. Eaton
      ii. Siemens
      iii. Schneider
   b. Size 150 amp, Minimum 26 spaces
   c. Provide panelboard with Bolt-on breakers
   d. Provide new breakers to match existing branch circuits amperage
   e. Provide electrical service required to operate the new HVAC system. Per the basis of design units specified in 1.2 B., provide at a minimum the following:
      i. Dedicated exterior electrical disconnect to the heat pump unit which complies with NEC 440.14 and located within 10-feet (indirect sight from the unit).
      ii. All wiring and conduit to route power back to service panel meeting NEC.
      iii. Provide and install dedicated 50amp breaker for 208/230V single phase power needs.
      iv. Submit all necessary electrical component requirements based on the HVAC unit make and model proposed by the Contractor to confirm or identify differences from the basis of design for COR approval.
   f. Ensure that grounding electrode system and grounding electrode conductor are reinstalled to meet 2026 National Electric Code requirements. Existing system meets requirements.
   g. Contractor to verify available fault current from utility in sizing AIC rating of main breaker in 150-amp panelboard.

B) *Combine the Range and Dryer sub breakers into the new panel.*

C) *Modify existing conduits to accommodate new panel board enclosures. Coordinate with COR.*

4. Remove existing attic insulation and re-insulate with closed cell foam insulation.

A) Remove all existing insulation.
   a. Insulation must be collected in a way that does not contaminate in or around the structure. All waste collected must be properly disposed of off of NPS property.
   b. Inspect attic for air leaks and moisture issues. Seal penetrations (top plates, electrical boxes, duct penetrations) to reduce air infiltration.
   c. Ensure proper ventilation paths are maintained.

B) Install new closed cell spray foam insulation.
   a. Install new spray foam insulation to achieve an R-50 rating.
   b. Installation of foam will be on the flat of the ceiling.
   c. Evenly distribute insulation to avoid gaps or compression.

d. Install baffles where necessary to maintain airflow at eaves.

C) Final Verification

a. Verify insulation depth and coverage meets or exceeds R-50 requirement.
b. Remove debris and leave attic in clean condition.

C. Contractor to provide third-party inspection of electrical work through commercial inspection agency prior to final inspection by COR.
   a. Third party inspection agency to be licensed by the state. Provide verification to COR prior to inspections.
   b. Since this is on Federal land, no local permits are required.
   c. Inspector to confirm that all work complies with requirements of 2026 National Electric Code.

D. Contractor to follow all applicable codes.

E. Applicable Codes:

   a. 2026 National Electric Code
   b. 2024 International Building Code
   c. 2024 International Existing Building Code
   d. 2024 International Fire Code
   e. 2024 International Plumbing Code
   f. 2024 International Mechanical Code
   g. 2024 International Wildland Urban Interface Code
   h. 2024 International Fuel Gas Code
   i. 2024 International Energy Conservation Code

F. All work will be performed under a single contract.

G. Period of performance: Work shall be completed within 90 calendar days of the start date provided on the Notice to Proceed. All onsite work must be performed after 10/05/2026.

   a. Clarification: The Notice to Proceed will be issued with a period of performance that is all inclusive of supply lead times, material deliveries, decommissioning, installation, anticipated average weather days for location, final commissioning, and acceptance of completed work. The contractor will be expected to provide a project schedule with adequate critical path details to ensure all work is completed within the stated calendar days from issuance of the Notice to Proceed. If weather impacts are projected beyond typical average weather patterns, contractor shall provide documentation in request for additional days.

1.3 Existing Condition Protections:

A. Preservation of Historical and Archeological Fabric:
   i. The Historic and Archeological Data Preservation Act of 1974 provides for the preservation of historical and archeological data that might otherwise be lost as the result of alterations to the terrain caused by a federal or federally licensed activity or program.

ii. IF, in connection with operations under this contract, the Contractor, subcontractors, or employees of any of them, discovers, encounters or becomes aware of any possible historical or archeological remains or data, objects or sites of cultural value on the project area, such as historical ruins, graves or grave markers, fossils, or artifacts not specifically noted within the contract. The Contractor shall immediately suspend all operations in the vicinity and continue work in other areas outside a 50 foot radius of discovery and notify the Contracting Officer immediately. When safe to do so, follow up in writing with photographs within 2 days, giving the location and nature of the findings. No objects of cultural resource value may be removed. Contracting Officer will contact other entities as required.

iii. Where appropriate by reason of discovery, the Contracting Officer may order delays in the time of performance and/or changes in the work. If such delays and/or changes are ordered, the time of performance and contract price shall be adjusted in accordance with Changes clause.

iv. The Contractor will be responsible for protecting the cultural resources within and adjacent to the project area from damage. In addition, the Contractor will be liable for all damage to the cultural resources caused by their actions or the actions of their agents or representatives. The Contractor shall immediately notify the Contracting Officer or their representative if any damage occurs to any cultural resource and immediately suspend work in the area in which damage has occurred until authorized to proceed.

v. The Contractor agrees to include this language within all subcontracts.

B. The structure or structures involved in this project are not historic.

C. There is no excavation required for this project.

ITEM 2 – PROTECTING EXISTING UTILITIES

2.1 Protecting Existing Utilities: Notify Contracting Officer (CO), Contracting Officer's Representative (COR) and utility companies as required to request location services prior to and to coordinate any excavation/digging operations, and/or for demolition if within Scope of Work.

2.2 Contractor shall be responsible for locating and preventing damage to known utilities on site or indoors. If contractor damage occurs, alert CO and COR as soon as safely possible, and repair utility at no additional expense to the Government. If damage occurs to an unknown utility, contact CO and COR as soon as safely possible.

2.3 Existing Utility Interruptions: Do not interrupt utilities serving facilities occupied by Government or others unless permitted under the following conditions and then only after arranging to provide temporary utility services according to requirements indicated below:

A. Notify CO and COR not less than two business days in advance of proposed utility interruptions.

B. Hours for Utility Shutdowns: Shutdowns shall not exceed 2 to 3 hours. Temporary provisions will be needed by the Contractor for periods longer than stated allowance or if required for critical systems as determined by COR.

ITEM 3 - CONTRACTOR'S USE OF PREMISES

3.1 Conduct of Operations: At all times the contractor shall conduct his operations in conformance with the rules and regulations promulgated by the Secretary of the Interior for the National Park Service, and applicable park rules and regulations prescribed by the Park Superintendent. https://www.nps.gov/sacn/learn/compendium.htm

A. Communications: Contractor shall provide the Contracting Officer and COR with methods of communication including land and/or cell phone numbers (note some areas of work have limited-service coverage), email and in case of emergency 24-hour contact options for duration of time operations.

B. No signs or advertisements (except those specified herein and as required for safety) shall be displayed on the construction site or within the park unless approved by the Contracting Officer.

C. Smoking is not permitted within any Federal building or within 25 feet of entrances, operable windows, or outdoor air intakes.

D. Public Use of Site: Contractor shall at all times conduct operations to ensure the least inconvenience to the public. Project location is a employee housing unit. Contractor shall conduct operations to ensure tenants access to their housing at all times.

3.2 On-site work hours: Work shall be generally performed during normal business working hours of 8am - 4pm., Monday through Friday, except when otherwise indicated. Work on Saturdays, Sundays, Federal holidays, early morning, or at night may not be performed without prior consent from the CO and COR. Submit requests for work outside of the stated normal business hours to the CO and COR for approval at least 48 hours in advance of the work.

The following Federal holidays are observed by the National Park Service:
New Year's Day
Inauguration Day
Martin Luther King, Jr's Birthday
Washington's Birthday
Memorial Day
Juneteenth National Independence Day
Independence Day
Labor Day
Columbus Day
Veterans Day
Thanksgiving Day
Christmas Day

- Note: Any of the above holidays falling on a Saturday will be observed on the preceding Friday; holidays falling on Sunday will be observed on the following Monday. The specific day that each holiday is recognized for each year can be found at the following site: Federal Holidays (opm.gov).

3.3 Contractor Use of Site:

A. General: Contractor shall have limited use of the site for construction operations. Limit use of premises to construction area as shown on site plan. Do not disturb portions of Project site beyond areas in which the Work is indicated.

B. Driveways and Entrances: Keep driveways, access roads, and entrances serving premises clear and available to Government, Government's employees, and emergency vehicles at all times. Do not use these areas for parking or storage of materials. Schedule deliveries to minimize use of driveways and entrances.

C. Do Not disturb site outside of noted disturbance area, including earthwork, and clearing of vegetation, to:

1. 10 feet beyond building perimeter

Contractor shall provide appropriate matts for equipment on turf areas to reduce soil compaction. Contractor shall remediate soil compaction as directed to do so by the CO/COR.

D. Utilities

1. General: Cost or use charges for temporary facilities shall be included in the Contract Sum as required.

2. Water Service: Water from existing water system is available for use without metering and without payment of use charges. Provide connections and extensions of services as required for construction operations without any additional permit costs. Use resources wisely and minimize waste of water.

3. Electric Power Service: Electric power from existing system is available for use without metering and without payment of use charges. Provide connections and extensions of services as required for construction operations without any additional permit costs. Power may or may not meet your construction power tool requirements, provide generators if questionable. Use power in a resourceful manner and avoid excess power waste.

4. Sanitary Operations:

a. Toilets: Contractor must provide toilets for contractor personnel, sufficiently lighted and ventilated toilet facilities in weatherproof, sight proof, handicap accessible (if required), sturdy enclosures with privacy locks. Coordinate with COR for approved location if not shown on attached site plan.

E. Security and Protection facilities:

1. Environmental Protection: Provide protection, operate temporary facilities, and conduct construction in ways and by methods that comply with state and federal environmental regulations and that minimize possible air, waterway, and subsoil contamination or pollution or other undesirable effects.

2. Cleaning of Equipment: The Contractor shall ensure that prior to moving on to the Project Area, all equipment is free of soil, seeds, vegetative matter, or other debris that could

contain or hold seeds. Ensure that all equipment has been pressure washed and is free of exotic species prior to start-up of operations and moving of equipment to Project Area. Equipment shall be considered free of soil, seeds, and other debris when a visual inspection does not disclose such material. Disassembly of equipment components or specialized inspection tools are not required.

3. Tree and Plant protection is not required for this project.

4. Pest Control: Follow best practices to minimize attraction and harboring of rodents, roaches, and other pests and to perform extermination and control procedures at regular intervals so Project will be free of pests and their residues at project completion. Perform control operations lawfully, using environmentally safe materials.

5. Temporary Enclosures: Not required.

6. Hot Work Permit: Not Required

3.4 Storage - Staging Areas:

A. Confine Storage of materials and equipment to the project staging area noted on the plans/aerial. Specific storage units shall be provided by the contractor and exact location within staging area shown in appendix A below may be discussed at the preconstruction briefing. All storage units provided by the contractor shall be in a clean and acceptable condition to the COR. Security of the materials and equipment on site is the Contractor's responsibility.

3.5 Preservation of Natural Features:

3.6 Hauling Restrictions: Contractor shall verify and be responsible for the path accessing the site and obtaining / maintaining all local, state and federal permits/licenses associated with hauling/road requirements and dumping of materials associated with the project.

3.7 Waste Removal, Recycling, and General Housekeeping:

A. Keep project site in a neat, orderly, and safe condition at all times.

1. Contractor is responsible for providing dumpsters for waste and recycling and for removing all waste created by the project. Contractor shall recycle to the highest degree possible and empty dumpsters as necessary to avoid debris on site. Coordinate with COR for approved dumpster locations prior to commencing construction.

2. Dispose of waste materials and recycling legally outside the park. The contractor shall not use park dumpsters.

3. Address Recycling: Government goal is to salvage and recycle as much nonhazardous construction waste as possible. Use sustainable methods to the extent possible during this project, recycling material as much as possible within local means. Maintain accurate documentary records for submittal of all recycled materials used including fly ash and slag cement.

4. For all waste and recycling removals offsite, contractors shall provide estimates and/or tickets to quantify material weights and report back to the park, submit to COR for review and record filing.

3.8 Occupancy Requirements for Buildings:

A. Existing Buildings:

1. Full Government Occupancy: Government will occupy buildings that will be under construction during the entire contract period. Cooperate with Government during construction operations to minimize conflicts and facilitate Government usage. Perform the Work so as not to interfere with Government's day-to-day operations. Maintain existing exits, unless otherwise indicated. Contractor will maintain access to existing walkways, corridors, and other adjacent occupied or used facilities. Do not close or obstruct walkways, corridors, or other occupied or used facilities without written permission from the CO or COR. Contractor will maintain existing building in a weather tight condition throughout construction period. Repair damage caused by construction operations. Protect building and its occupants during construction period.

B. New /Existing Buildings Unoccupied:

1. N/A

3.9 Photo Documentation:

A. Contractor must provide existing condition, progress, and completion photos. All photos shall be in focus, show maximum range of depth of field general photo and then close up detail photo as needed. Shall be in JPEG digital form and <u>submitted preferably electronically by email</u> or optional via CD-R Archival Gold or DVD-R Archival Gold media with printed labels and 8 mega pixels minimum within 7 days from time of taken or as approved by COR.

B. Existing Condition Images:

1. Before starting construction, take color, dated, digital images of project site and adjacent property/roads/etc. that may be impacted by construction activity/traffic. Include existing items to remain or be salvaged from different vantage points and with context for location identification.

C. Construction Progress Images:

1. Document all sub-surface work/ trenches etc. prior to backfill with photos covering enough overall field view to show location and then zoom in for details. (Locations and dimensions shall also be noted on as built drawing set.)
2. Maintain organized index for photos with date, description, etc.
3. Additional images as needed when questions or emergency situations occur. Submit within 24 hours.

D. Completion Images:

1. Document all completed work within scope of work.
2. Maintain organized index for photos with date, description, etc..
3. Additional images as needed when questions or emergency situations occur. Submit within 24 hours.

3.10 Fire and Life Safety:

A. As a minimum, conduct one weekly 15 minute "toolbox" safety meetings. These meetings shall be conducted by a foreman or supervisor and attended by all construction personnel at the worksite. Topics need to coincide with work scheduled for the following week. Document and submit meeting minutes to the CO and COR within one day after the meeting and document the meetings on the daily reports.

B. Comply with the requirements of NFPA 241 (Standard for Safeguarding Construction, Alteration, and Demolition Operations). Take all necessary precautions to prevent fire during construction. Provide adequate ventilation during use of volatile or noxious substances.

C. Store and handle hazardous materials in accordance with manufacturers and OSHA 29CFR1926 Subpart D requirements 1926 | Occupational Safety and Health Administration (osha.gov). Maintain readily available, on site, MSDS/Safety Data Sheets (SDS) for each chemical.

1. Immediately report all spills of hazardous materials to the CO, COR, and park.
2. Maintain a spill emergency response kit.
3. Train employees how to respond to a spill and use the emergency response kit.

3.11 Noise and Acoustics Management

A. Contractor shall not have personal radios or other media sources and they shall not be broadcast within NPS property.

B. Noise Control: Perform operations to minimize noise. Perform noise-producing work in less sensitive hours of the day or week as directed by the Contracting Officer or COR.

C. Repetitive and/or intermittent, high-level noise: Permitted only during Daytime.
   a) Coordinate with COR prior to execution

ITEM 4 - COMMENCEMENT, PROSECUTION, AND COMPLETION

4.1 The Contractor shall commence work in accordance with the terms and conditions of the contract. Contractor shall coordinate and incorporate long lead and delivery time items within the schedule.

ITEM 5 - EXAMINATION OF THE SITE

5.1 All bidders are urged to visit the job site and examine existing conditions before submitting bids. Contractors will be accountable for understanding existing conditions. No cost changes for items visible during site visit will be allowed.

ITEM 6 - ABBREVIATIONS

6.1 The list of abbreviations, standards and organizations which may be used in/referred within the Construction Specifications or Special Provisions, may be found linked from the listed page below. On the home page, follow the link under **"Contracting and Procurement"** labeled **"NPS Reference Standards."** https://www.nps.gov/orgs/1671/do-business-with-us.htm

ITEM 7 - ACCIDENT PREVENTION

7.1 Description: The work of this section consists of establishing and implementing an effective accident prevention program (APP) and providing a safe environment for all personnel and visitors.

7.2 Submittals:

A. Accident Prevention (Safety) Plan (APP): Submit a **site-specific** accident prevention (safety) plan. The Plan shall be written to comply with OSHA and project requirements (a generic plan is not acceptable) including but not limited to the following:

1. Name and qualifications of responsible supervisor to carry out the program.
2. First aid and rescue procedures.
3. Training, both initial and continuing.
4. Outline of each phase of the work, the hazards associated with each major phase, and the methods proposed to provide for property protection and safety of the public, National Park Service personnel, and Contractor's employees. Identify the work included under each phase, with a Job Hazard Analysis (JHA)/Job Safety Analysis (JSA), etc. A sample JHA template may be provided upon request.
5. Planning for possible emergency situations, such as cave-ins, earthquake, explosions, fires, floods, power outages, slides, and windstorms. Such planning shall take into consideration the nature of construction, site conditions, and degree of exposure of persons and property.
6. Contractor to identify nearest location of medical facility for emergencies
7. Recognition that works will be performed in remote areas with limited communication or cell phone coverage if applicable.
8. Supplemental hazard specific plans may be required IAW 29 CFR 1926 or 1910.

B. Meeting and Inspection Reports: Safety Meetings: As a minimum, conduct 15 minute "toolbox" safety meetings. These meetings shall be conducted by a foreman and attended by all construction personnel at the worksite. Submit a report of safety meetings and inspections to CO and COR within one day after the meeting and document the meetings on the daily reports.

7.3 Qualification of Employees:

A. Ensure that employees are physically qualified to perform their assigned duties in a safe manner to include operators of vehicles and equipment. Provide operating instructions for all equipment.

B. Do not allow employees to work whose ability or alertness is impaired because of drugs, fatigue, illness, intoxication, or other conditions that may expose themselves or others to injury.

7.4 Accident Reporting: The Contractor shall report all accidents to the CO and COR as soon as safely possible and assist the CO and COR and other officials as required in the investigation of the accident.

7.5 First Aid Facilities: Provide access to facilities for the number of employees and appropriate to the hazards associated with the types of ongoing construction work at the site.

7.6 Emergency Instructions: Post telephone numbers and reporting instructions for ambulance, physician, hospital, fire department, and police in conspicuous locations at the work site.

7.7 Personal Protective Equipment (PPE): It is the Contractor's responsibility to require all those working on or visiting the site to wear necessary protective equipment at all times.

A. PPE must meet requirements of applicable ANSI standards. Selection shall conform to OSHA 29CFR 1926 Subpart E.

B. A hard hat use area shall be designated by the Contractor. The hard hat area shall be posted by the Contractor in a manner satisfactory to the Contracting Officer.

C. All PPE will be serviceable at all times. At a minimum, maintain 2 sets of PPE including hard hats and all other Accident Prevention Plan required equipment.

7.8 Hazardous Materials: It shall be the responsibility of all operators and contractors, functioning within the park to properly cleanup, mitigate and remediate if necessary, all unauthorized discharges of hazardous materials or non-hazardous chemical and biological products released from fleet and/or other support vehicles or stationary sources. Response shall be consistent with guidelines established by federal, state, and local regulations, and as outlined within the operator's Safety or Hazardous Materials Business Plan.

A. If a spill, leak, or other release occurs, the operator shall as soon as possible, without impeding cleanup, notify the local 911 Emergency Response, COR and or the National Park Service Emergency Dispatch.

ITEM 8 - PRECONSTRUCTION CONFERENCE

8.1 If the Contracting Officer decides to conduct a preconstruction conference, the successful offeror will be notified and will be required to attend. The Contracting Officer’s notification will include specific details regarding the date, time, and location of the conference, any need for attendance by subcontractors, and information regarding the items to be discussed. See Item 9.1C below.

ITEM 9 - SUBMITTALS

9.1 General Contracting Submittal Procedures:

A. General: Prepare and submit submittals required by individual Technical Specification Sections. Types of submittals are indicated in individual specific sections.

1. CM-16 Transmittal Form: All submittals shall be transmitted via electronic email using National Park Service form CM-16 form. The form will be provided by the Contracting Officer. No action will be taken on a submittal item unless accompanied by the CM-16 transmittal form. Submit completed CM-16 forms to the CO and the COR

B. Submittal List: administrative required submittals are listed below in 9.1.C and does not include technical section submittal requirements included in each technical section.

C. Preconstruction Conference Submittal: Satisfactory evidence of liability insurance coverage and workman's compensation, and any applicable bonds, must be submitted within 10 calendar days of Notice of Award. The following items are to be submitted prior to the Preconstruction Conference or as specified at the CO's discretion. The timeline for the documents to be submitted will be addressed at the pre-construction conference for those items that were not received and approved prior. Notice to Proceed may not be issued, and the Contracting Officer will consider other contractual remedies if not resolved as directed. Work shall not commence until written Notice to Proceed has been issued. Contracting Officer will notify Contractor of tentative date for the Pre-Construction Conference:

1. Letter designating Project Superintendent.
2. Construction Schedule. (Must include shop drawings, procurement time including long lead time items, mobilization, trade work progression and completion at minimum.)
3. A comprehensive breakdown of the Schedule of Values.
4. Accident Prevention (Safety) Plan (see section 7 of this document).
5. A list of Subcontractors for this project.
6. Written statements from subcontractors certifying compliance with applicable labor standard clauses (SF1413).
7. Quality Control Plan.

9.2 Project Submittal Process (Shop Drawings, Product Data, and Samples): Contracting Officer will provide sample cover sheet and a list of required submittals is included in each technical specification or attached at the end of this document.

A. Shop Drawings: Indicate all coordinating materials and work impacting the installation coordination, connection details, anchorage requirements, hardware locations, and installation details and locations.

1. Submit Shop Drawings according to Part 9.1 of this section to include one digital file (.PDF or .TIF) and two full size hardcopy documents to COR.

B. Product Data: Provide component construction and specification data sheets, anchorage requirements and any other product specific data.

1. Submit Product Data according to Part 9.1 of this section to include one digital file (.PDF or .TIF) to COR.

C. Samples: Submit 2 color samples 4” x 6” minimum in size for all product color selections. Paint samples shall be actual paint finish drawdown for all project colors.

1. Submit Samples CM-16 Transmittal Form according to Part 9.1 of this section to include one digital file (.PDF or .TIF) and physical samples of actual material to COR.

D. For submittals specified above, forward submittals to Contracting Officer and COR at least 15 days before need for approval (depends on length of project).

E. After approving submittals, Contracting Officer and/or COR will return one copy to the Contractor. If submittals are not approved, Contracting Officer will return all copies to Contractor with reasons for rejection. Resubmit, identifying changes. Any work done before approval shall be at Contractor's own risk.

9.3 Approved Equals: All brand names noted are subject to ‘or equal’ products. If an item in this solicitation is identified as “brand name or equal” or lists more than 1 manufacturer, the description of the proposed item must reflect the characteristics and level of quality that will satisfy the Government’s needs as demonstrated by the salient physical, functional, or performance characteristics that “equal” products must meet and/or exceed that as specified in the solicitation or relevant specification. Contractor shall incorporate and be responsible for all collateral costs due to the or equal proposed as required to provide a complete project.

A. For each item proposed as an “approved equal,” submit supporting data, including:

1. Drawings and samples as appropriate.
2. Comparison of the characteristics of the proposed item with that specified and with the salient characteristics provided.
3. Changes required in other elements of the work because of the substitution.
4. Name, address, and telephone number of vendor.
5. Manufacturer’s literature regarding installation, operation, and maintenance, including schematics for electrical and hydraulic systems, lubrication requirements, and parts lists. Describe availability of maintenance service, and state source of replacement materials.

B. A request for approval constitutes a representation that General Contractor:

1. Has investigated and shall provide documentation in request showing that the proposed item is equal or superior in all respects to the salient characteristics specified.
2. Will meet or exceed warranties for the proposed item specified.
3. Has determined that the proposed item is compatible with interfacing items.
4. Will coordinate the installation of an approved item and make all changes required in other elements of the work because of the substitution.
5. Waives all claims for additional expenses that may be incurred as a result of the substitution.

C. Approved Equals will be evaluated and approved/disapproved during the submittal process.

9.4 Schedule of Values: Submit the Schedule of Values a minimum of one week prior to the Preconstruction Conference for COR review. Schedule of Values shall include defined work line items with cost break downs including labor, material, and equipment for COR approval.

9.5 Progress Reporting: The initial Construction Schedule and Schedule of Values are required a minimum of one week prior to the Preconstruction Conference. After the Notice to Proceed is issued and after on-site work begins, progress will be documented via daily logs and by providing an updated Construction Schedule and Schedule of Values when requested, but minimally with each pay application. Submit digital copy electronically (PDF preferred) of all required documents. Construction Schedules are normally in bar chart form and indicate estimated starting and completion dates for each part of the work. For a pay application to be reviewed and processed in a timely manner, the following information must either be submitted prior to or accompany submission of the pay application:

A. Daily/weekly progress reports during construction as part of the administration process.

B. Updated Schedule of Values: Breakdown each lump-sum item into component work activities used in the schedule, for which progress payments may be requested. The Schedule of Values will form the basis for payment. The work activities broken out within the schedule of values shall be integrated into and made a logical part of the construction baseline schedule submitted under this specification. The total costs for the component work activities shall equal the contract price for that lump-sum item. The Contracting Officer may request data to verify accuracy of dollar values. A sample Schedule of Values format may be provided upon request.

ITEM 10 – TEMPORARY SERVICES

10.1 It is the Contractor's responsibility to provide temporary services, equipment, tools, and skilled labor as required for the chosen means and methods to perform the work in accomplishing this Contract.

ITEM 11 - PROJECT CLOSEOUT

11.1 Description: The work of this section consists of final cleanup, closeout submittals, final inspection procedures working toward Final Acceptance.

11.2 Cleaning: Remove all tools, equipment, surplus materials, and rubbish. Move attic stock to location coordinated with COR. At time of final inspection, project shall be thoroughly clean and ready for intended use. Inspector holds the right to reschedule if project is not ready for inspection.

11.3 Completion and Final Inspection: Contractor shall submit written certification of project completion and request a final inspection to the Contracting Officer and COR. The Contracting Officer or designee will make an inspection within 10 days of receipt of request or at a mutually agreeable time.

A. If the work is determined to be complete following the final inspection with minor comments, the COR will prepare and provide the Contractor a Punch List noting outstanding items to be addressed.
B. If the work is not determined to be complete following the final inspection, the Contracting Officer will notify Contractor in writing, stating reasons. Contractor, after completing the work according to the Contract Documents, shall resubmit completion and request a new final

inspection. Re-inspection costs may be charged against the Contractor in accordance with the Inspection of Construction contract clause.

C. Contractor shall complete the Punch List within 30 calendar days, or a time directed by the CO.

D. Once Contractor completes all items of work on the Punch List and all contractually required items are accepted, Contracting Officer will issue Letter of Final Acceptance of Work and request the final pay application.

E. If the Contractor fails to complete the work within the time frame, the Contracting Officer may correct the work with an appropriate reduction in contract price or charge for re-inspection costs in accordance with the Inspection of Construction contract clause.

F. Disposition of any permits and warranties required by the specifications in this section.

11.4 Final Acceptance of the Work: After all punch list deficiencies have been corrected, a Letter of Final Acceptance will be issued. A Release of Claims document must be executed and submitted to the Contracting Officer before final payment can occur.

11.5 Warranties

A. Construction Warranty shall be based on date of final acceptance of the work and remain in effect for one year.

B. Provide all manufacturer warranty information of products installed organized by Division. All contact information, extent of coverage and conditions shall be clearly noted as well as date of overall final acceptance.

C. Information shall include operation and maintenance manuals for each warranted product.

ITEM 12 - DEFINITION OF CONTRACT LINE ITEMS

12.1 Summary

A. The intent of this section is to explain, in general, what is and what is not included in a contract line item, and the limits or cut off points where one item ends, and another begins.

B. If no contract line item exists for a portion of the work, include the costs in a related item.

12.2 List of Contract Line Items

A. Contract Line-Item No. Contract Line-Item No. CLIN 010 Items, HVAC, Bathroom Fan, and Electrical panel replacement.

1. This item consists of Contract Line-Item No. CLIN 010 Items, HVAC, Bathroom Fan, and Electrical panel replacement..
2. Payment will be made per the contract and percentage of completion level.

B. Contract Line-Item No. Contract Line-Item No. CLIN 020 Insulate the attic with spray foam. Include removal of existing attic insulation.

1. This item consists of Contract Line-Item No. CLIN 020 Insulate the attic with spray foam. Include removal of existing attic insulation.
2. Payment will be made per the contract and percentage of completion level.

END OF SECTION

Appendix A Site Plan

Appendix B Project Photos

Franklin Electric
SUBMERSIBLE MOTOR CONTROL
XO CIRCUIT BREAKER LOAD CENTER
MAINS 100 AMPS 120/240 V.A.C.
SQUARE D COMPANY
Range
RANGE
QO LOAD CENTER
DANGER

Appendix C Project Drawings

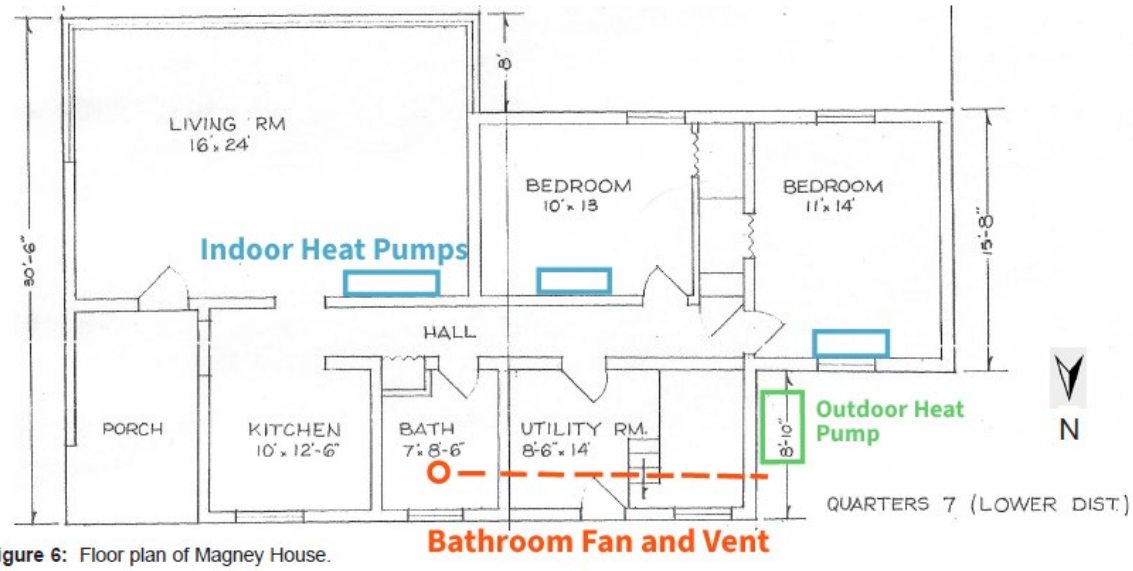

Figure 6: Floor plan of Magney House.

5

Specification Sheet

CertainTeed
SAINT-GOBAIN

CertaSpray® Closed Cell Foam

Product Name	CertainTeed CertaSpray® Closed Cell Foam
Manufacturer	CertainTeed Corporation
Address	20 Moores Road Malvern, PA 19355
Phone	800-233-8990
Website	www.certainteed.com/insulation

PRODUCT DESCRIPTION

Basic Use: CertaSpray® Closed Cell Foam is a two-component closed cell spray foam with a zero-ozone-depleting blowing agent. When CertaSpray A-side is mixed with CertaSpray B-side closed cell under pressure in a 1:1 volumetric ratio, they react and expand into a medium-density closed cell foam with an in-place core density of nominal 2.0 pcf.

Benefits: CertaSpray Closed Cell Foam provides thermal insulation for the interior or exterior of the building while also reducing air and water vapor infiltration through the building envelope.

Applications: The closed cell 2-pcf foam can be spray-applied into open wall cavities, perimeter joists, cathedral ceilings, garage ceilings, attics, exterior walls and crawlspaces. When covered by a 15-minute prescriptive thermal barrier, thickness is not limited. Product must be finished according to local code, and must be applied by a qualified applicator.

Composition and Materials: CertaSpray Closed Cell Foam is a medium-density, MDI-based polyurethane thermoset foam.

TECHNICAL DATA

Applicable Standards

- ASTM C1029, Type I and Type II
- ICC-ES, AC–377 (ESR-3758)
- 2012 International Residential Code (IRC) Section R316
- 2012 International Building Code (IBC) Section 2603
- 2012 International Energy Conservation Code (IECC) Section R 303
- NFPA 285 (2012 IBC Types I & II Construction)
- For use in dwellings under the IRC and Type I, II, III, IV and V constructions under the IBC
- AC-377 Appendix X (Attic & Crawl Spaces)

LIMITATIONS

Foam Plastic Insulation: CertaSpray Closed Cell Foam is defined by the building codes as a foam plastic insulation.

Thermal Barrier: Many building codes require that foam plastic insulation be covered with an approved 15-minute thermal barrier. Consult local building code officials to ensure the application meets local building codes and regulations.

Vapor Retarder: CertaSpray Closed Cell Foam meets the performance requirement for a Class II vapor retarder at 1" thickness. Check local building code for climate-specific vapor retarder requirements.

Lighting Fixtures: The National Electrical Code prohibits installation of any insulation over or within 3" (76 mm) of recessed light fixtures unless approved insulated ceiling (IC) light fixtures are used.

Maximum Use Temperature: CertaSpray foam should not be in contact with equipment or materials that have operating temperatures greater than 180°F.

All application surfaces must be free of oil, grease, dust and debris. Surface must be dried prior to application of spray foam. Do not apply this product when the dew point is within 5°F of the air temperature, or when the substrate moisture content is greater than 18%. Excess humidity may cause poor adhesion and result in product failure.

To avoid overspray, product should not be applied when conditions are windy.

FIRE PERFORMANCE*

	TEST METHOD	RESULT
Flame Spread Index, 4"	ASTM E84	< 25
Smoke Index, 4"	ASTM E84	< 450
Attic Vertical Walls	ACC 377 Appendix X	≤ 11.5"

* The results of the test method may not be indicative of real-life fire performance. All plastic insulation must be separated from the interior building by an approved thermal barrier of 1/2" gypsum wallboard or equivalent thermal barrier material as required by the building code.

CHEMICAL PROPERTIES

	CERTASPRAY A	CERTASPRAY B
Viscosity at 25ºC, cps	150-250	Summer = 800 Winter = 500 Extreme Winter = 400
Specific Gravity at 25ºC, g/ml	1.23	1.14

INSTALLATION

Prior to application, substrate temperature must reach:

Summer Blend: 10ºC (50ºF)
Winter Blend: -4ºC (25ºF)
Extreme Winter Blend: -12ºC (10ºF)

The final product yield is dependent on spray conditions and spray techniques. Finished product should not be left exposed to UV for more than 2 weeks or the product could degrade.

Typical End Use Properties: The thermal performance values are achieved at the thickness specified when installed as recommended.

CAUTION: CertainTeed recommends that you consult an HVAC expert and comply with guidelines established by applicable building codes prior to using any closed or open cell spray foam insulation product in an attic retrofit application. If not installed correctly, adding spray foam to a vented attic may significantly impair the performance of the HVAC system and may cause other damage to the building. CertainTeed will not assume any liability or responsibility for any personal injury or property damage occurring as a result of the improper installation of spray foam insulation that is not in accordance with the instructions accompanying the product, that is not in conformance with any applicable building codes or that is contrary to the advice given by a duly qualified HVAC expert.

HANDLING AND STORAGE

Storage: It is recommended that the CertaSpray A and CertaSpray B drums should be stored between 55-80°F. Keep containers tightly closed and store in a dry, well-ventilated area protected from freezing, rain, direct sunlight and excess heat. The storage life of B-side is up to 6 months and A-side up to 6 months when stored according to the recommended conditions.

Handling: When opening the drums, loosen the cap slowly to release pressure in the drum. Do not ingest. Avoid contact with eyes, skin and clothing. Avoid breathing aerosols, vapor or mist. Wash skin thoroughly after handling.

The Safety Data Sheet (SDS) for CertaSpray A and CertaSpray B closed cell must be read before using this product.

HEALTH AND SAFETY

The health and safety information in this data sheet does not contain sufficient detail for safe handling in all cases. For detailed safety and health information refer to the SDS for this product.

AVAILABILITY AND COST

Distributed and sold throughout the United States. For availability and cost contact your local Territory Manager, contractor or distributor, or call CertainTeed Sales Support Group at 800-233-8990.

WARRANTY

Refer to CertainTeed's Lifetime Limited Warranty for CertaSpray Foam Insulation (30-50-012).

MAINTENANCE

No maintenance required.

TECHNICAL SERVICES

Technical assistance can be obtained either from your local CertainTeed sales representative, or by calling CertainTeed Sales Support Group at 800-233-8990.

EMERGENCY CALLS:

CertainTeed Emergency Response Center
800-424-9300

CHEMTREC—Spills, Leak, Fire
800-424-9300 (in USA and Canada)

RECOMMENDED PROCESSING CONDITIONS

	VALUE
Winter and Summer, °F Extreme Winter, °F	110 – 135 120 – 135
Hose Temperature, °F	≤ 135
Pressure, psi	1100 – 1500
A/B Volumetric Ratio	1/1
Cream Time**, sec	1 – 2
Tack Free Time**,sec	4 – 8
Maximum Thickness Per Pass, Inches	3.25
Maximum Installation Thickness, Inches	See application section

**Tested in accordance with ASTM C518 and/or C177 at 75°F (24°C) mean temperature. Aged 90 days at 140°F.

THERMAL PERFORMANCE

THICKNESS		AGED R-VALUE**
in.	mm	R
1	25	6.5
1.5	38	9.8
2	51	13
2.5	64	17
3	76	20
3.1	79	21
3.25	83	22
3.5	89	23
4	102	27
4.5	114	30
5	127	33
5.5	140	37
6	152	40
7.5	191	50
8.5	216	56
10	254	66
11.5	292	76
12	305	80

PHYSICAL AND MECHANICAL PROPERTIES

PROPERTY	ASTM METHOD	VALUE
Core Density, pcf	D1622	nominal 2.0 pcf
Closed Cell Content, %	D6226	> 90%
Compressive Strength, psi	D1621	> 25
Tensile Strength, psi	D1623	57
Water Absorption, % by volume	D2842	< 3%
Dimensional Stability, 70°C/97% RH, vol. %, 7 days	D2126	< 15%
Water Vapor Transmission (Permeability), perm-inch	E96	1.00 @ 1" 0.50 @ 2" 0.33 @ 3" 0.25 @ 4" 0.20 @ 5" 0.17 @ 6"
Air Permeability, at 1" thickness, L/s/m²	E283	0.013
Fungi Resistance	C1338	Pass, with no growth

The typical properties were obtained on samples produced with a Gusmer/Graco H25 spray machine using an air-purged Fusion spray gun. The foam was sprayed at a thickness of approximately 4", in two passes of 2" each. Please see Recommended Processing Conditions for additional information.

Seal and Insulate with ENERGY STAR — LEARN MORE AT energystar.gov

GREENGUARD GOLD

U.S. GREEN BUILDING COUNCIL MEMBER

SPRAY POLYURETHANE FOAM ALLIANCE SPFA MEMBER

NAIMA North American Insulation Manufacturers Association

ASK ABOUT OUR OTHER CERTAINTEED PRODUCTS AND SYSTEMS:

ROOFING • SIDING • TRIM • DECKING • RAILING • FENCE
GYPSUM • CEILINGS • INSULATION

CertainTeed Corporation
20 Moores Road
Malvern, PA 19355

Professional: 800-233-8990
Consumer: 800-782-8777
www.certainteed.com/insulation

CertainTeed SAINT-GOBAIN

Code No. 30-50-011, © 05/16 CertainTeed Corporation.

BELS8 Roomside Series Humidity Sensing Fan/Light

READ AND SAVE THESE INSTRUCTIONS

For Warranty Statement, Service Parts, Technical Support, or to Register your product, please visit our website or call:
In the United States - Broan-NuTone.com 800-558-1711.
In Canada - Broan-NuTone.ca 800-567-3855.

WARNING

TO REDUCE THE RISK OF FIRE, ELECTRIC SHOCK, OR INJURY TO PERSONS, OBSERVE THE FOLLOWING:

1. Use this unit only in the manner intended by the manufacturer. If you have questions, contact the manufacturer at the address or telephone number listed in the warranty.
2. Before servicing or cleaning unit, switch power off at service panel and lock the service disconnecting means to prevent power from being switched on accidentally. When the service disconnecting means cannot be locked, securely fasten a prominent warning device, such as a tag, to the service panel.
3. Installation work and electrical wiring must be done by a qualified person(s) in accordance with all applicable codes and standards, including fire-rated construction codes and standards.
4. Sufficient air is needed for proper combustion and exhausting of gases through the flue (chimney) of fuel burning equipment to prevent backdrafting. Follow the heating equipment manufacturer's guideline and safety standards such as those published by the National Fire Protection Association (NFPA), and the American Society for Heating, Refrigeration and Air Conditioning Engineers (ASHRAE), and the local code authorities.
5. When cutting or drilling into wall or ceiling, do not damage electrical wiring and other hidden utilities.
6. Ducted fans must always be vented to the outdoors.
7. Acceptable for use over a tub or shower when connected to a GFCI (Ground Fault Circuit Interrupter) - protected branch circuit (ceiling installation only).
8. This unit must be grounded.
9. Do not use this fan with any solid-state speed control device.
10. Do not use replacement parts that have not been recommended by Broan NuTone LLC.
11. If the fan makes excessive noise or if there is unusual noise or smells of smoke. Disconnect power supply and contact customer service.
12. The wearing of safety glasses and gloves is recommended when installing, maintaining or cleaning the unit to reduce the risk of injury that could be caused by the presence of thin metal and/or moving parts.

CAUTION

1. For general ventilating use only. Do not use to exhaust hazardous or explosive materials and vapors.
2. Install the fan at least 8 feet (2.4 m) above the floor.
3. To avoid motor bearing damage and noisy and/or unbalanced impellers, keep drywall spray, construction dust, etc. off power unit.
4. DO NOT TOUCH THE HUMIDITY-SENSING CIRCUIT BOARD. Electrostatic discharge may damage the circuit board.
5. Please read specification label on product for further information and requirements.

CLEANING & MAINTENANCE

TO CLEAN THE GRILLE: Remove the grille and grille trim. Plastic parts can be cleaned with mild detergent, such as dishwashing liquid. Dry with a soft cloth. DO NOT USE ABRASIVE CLOTH, STEEL WOOL PADS OR SCOURING POWDERS.

TO CLEAN INTERIOR OF THE UNIT: Once the grille and grille trim are removed, gently vacuum interior of the unit with the dusting brush attachment.

TO CLEAN THE SENSOR: Remove the grille and grille trim. Use a dry dustcloth, clean toothbrush or lightly vacuum to clean sensor and grille. DO NOT USE ABRASIVE CLOTH, STEEL WOOL PADS OR SCOURING POWDERS. DO NOT USE cleaning sprays, solvents or water on or near sensor!

The motor is permanently lubricated and never needs oiling. If the motor bearings are making excessive or unusual noises, replace the blower assembly (includes motor and impeller).

OPERATION

Use an on/off switch to operate the fan, light and sensor. The fan, light and sensor can be operated separately if an appropriate 3-function wall control is used.
Refer to Broan-NuTone catalog for a complete line of accessories/controls to effectively adapt these fans to your requirements.

SENSOR OPERATION

To activate the humidity sensor, turn the humidity switch ON. The fan will run automatically when the set Humidity condition is met, and stop automatically when the timer condition is met. The Humidity Sensor may occasionally turn the fan ON when environmental conditions change.

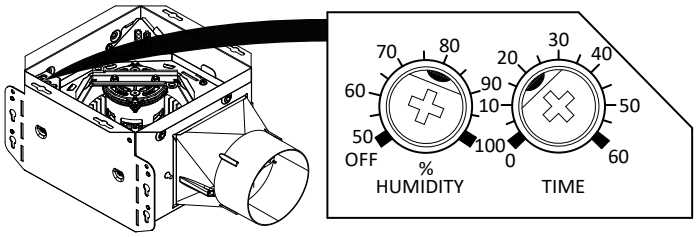

% HUMIDITY ADJUSTMENT

To adjust the % HUMIDITY:

1. Turn power off at electrical service panel.
2. Use a small screwdriver to carefully rotate %HUMIDITY control to desired level. If fan is not responding to changing humidity conditions, adjust towards 50%. If fan is responding too often to changing humidity conditions, adjust towards 100%.
3. Turn power on.
4. Repeat above steps if necessary.

MINUTES ADJUSTMENT (TIMER)

This humidity-sensing fan has a timer that controls how long the fan remains on after the humidity in the room returns to the user-adjustable set-point.

To adjust the timer:

1. Disconnect power at electrical service panel.
2. Use a small screwdriver to carefully rotate MINUTES control to increase or decrease time.
3. Turn power on.
4. Repeat above steps if necessary.

If fan is still not responding as desired after making adjustments, contact Broan Technical Support.

MANUAL ON

To manually energize the fan:

- Turn the fan only switch on

or

- Cycle the Humidity switch on/off/on.

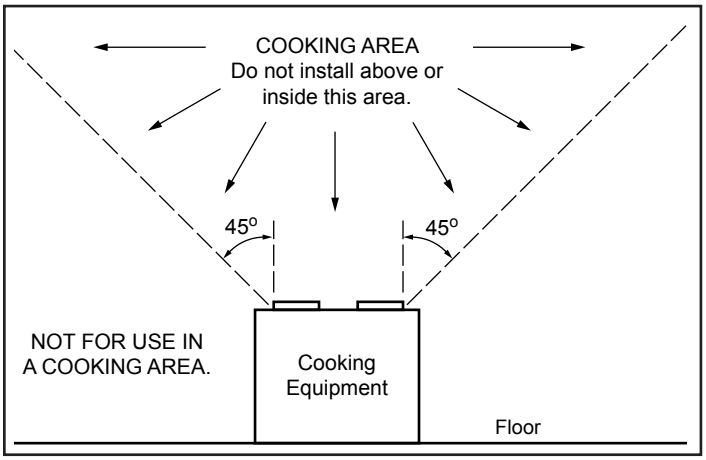

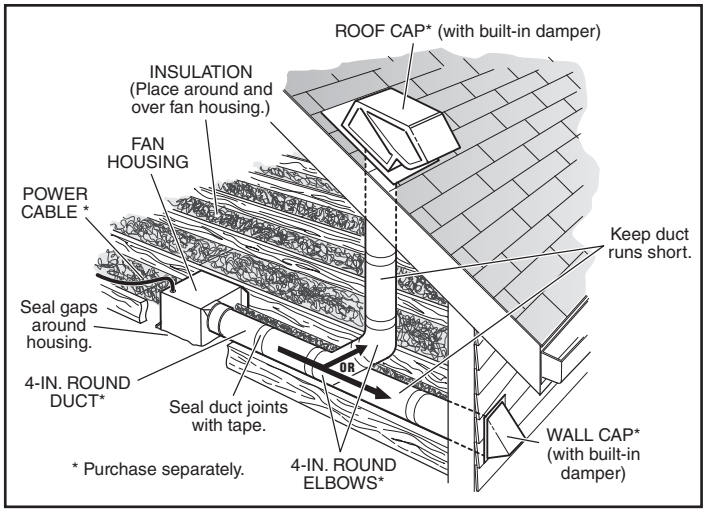

IMPORTANT - The ducting from this fan to the outside of the building has a strong effect on the air flow, noise and energy use of the fan. Use the shortest, straightest duct routing possible for best performance, and avoid installing the fan with smaller ducts than recommended. Insulation around the ducts can reduce energy loss and inhibit mold growth. Fans installed with existing ducts may not achieve their rated airflow.

OPTION - To mount housing anywhere between ceiling framing: Use optional Hanger Bar Kit (sold separately from local distributors or website). Follow mounting instructions included with kit.

QUICK START GUIDE

1 **Remove from packaging. Remove blower assembly and wiring panel.**

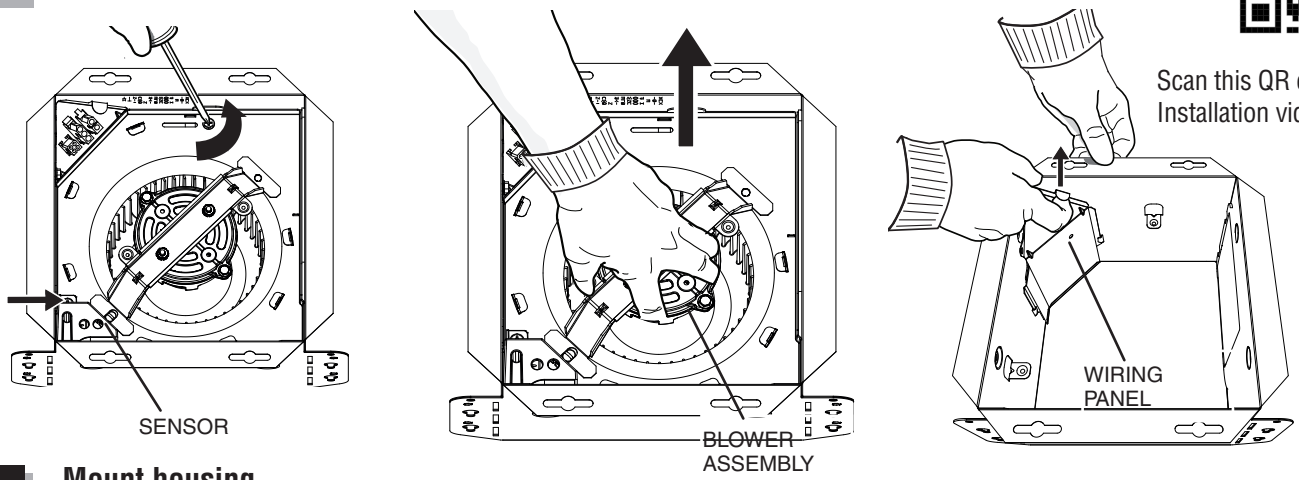

Scan this QR code for Installation video.

2 **Mount housing.**
Choose one option to mount housing to ceiling structure:

New Construction

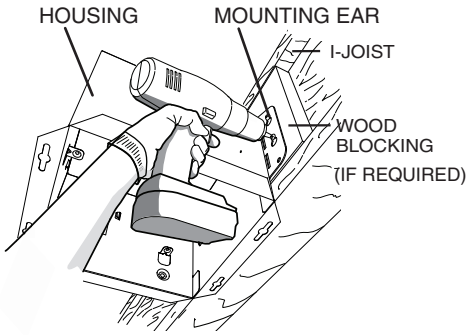

Other options:
- Hanger bars (sold separately Model Number MHB4)
- Flange Install (see Installation video)

or

Retrofit

Note: If you are installing retrofit, bend the ears in and use the mask from packaging to cut opening to correct size.

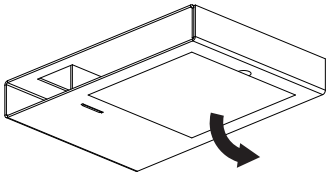

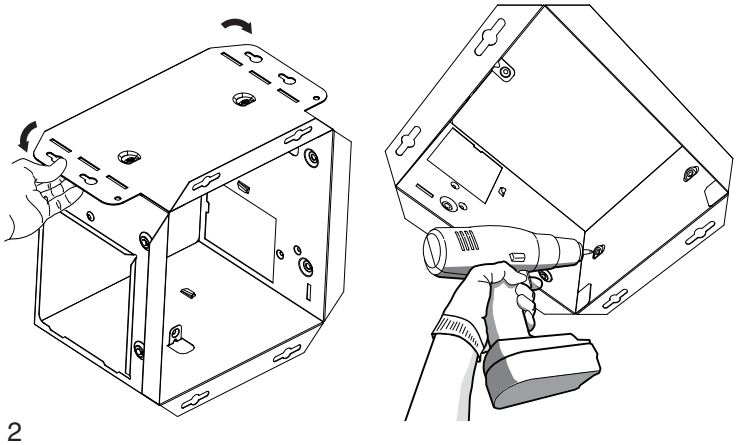

3 Choose one option to attach duct connector.

New Construction

Install duct connector (use screw from parts bag and ensure tabs engage in housing), then attach new construction ductwork with foil tape.

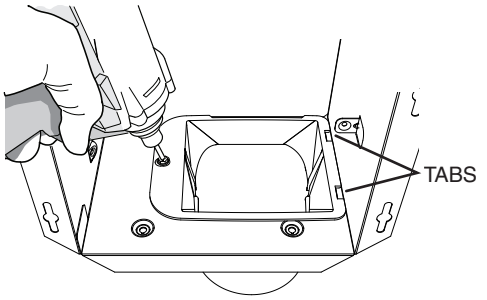

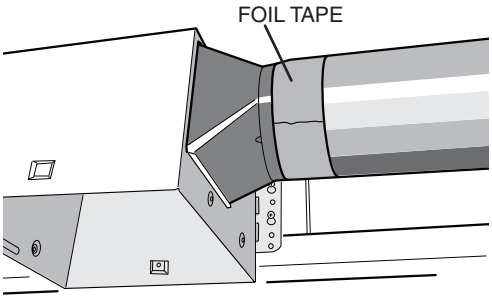

or

Retrofit

Pull ductwork into housing and attach to duct connector with foil tape, then install duct connector (use screw from parts bag and ensure tabs engage in housing).

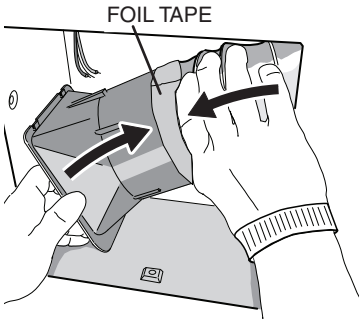

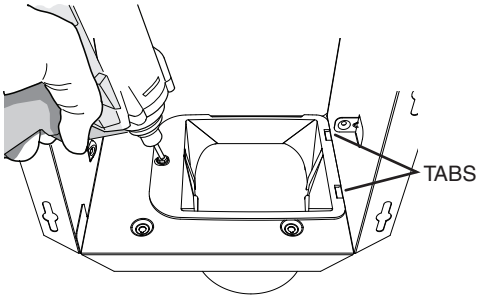

Pro Tip: First and last 18" of the ducting should be rigid or stretched straight for expected performance.

4 Connect wiring.

Scan this QR code for helpful hints.

WIRING OPTION # 1

- When first switch (1) is ON, fan will operate automatically based on room humidity conditions.
- Turn fan ON immediately for the set timer period (to control odors), by cycling first switch (1) ON/OFF/ON.
- Use second switch (2) to turn light ON/OFF.
- With optional connection shown, fan will always be ON when light is ON.

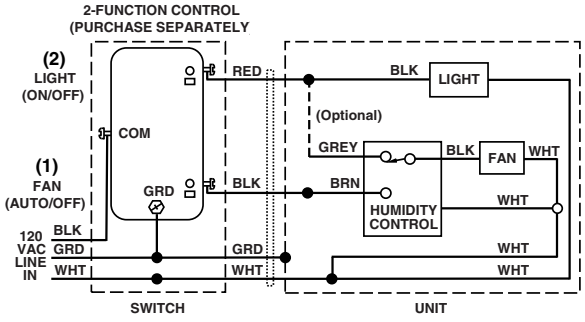

WIRING OPTION # 2

- When first switch (1) is ON, fan will operate automatically based on room humidity conditions.
- Turn fan ON immediately (to control odors), by using second switch (2).
- Use third switch (3) to turn light ON/OFF.

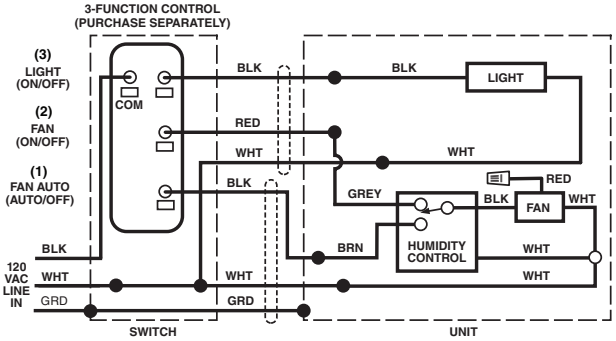

5 Attach wire enclosure by tab and screw.

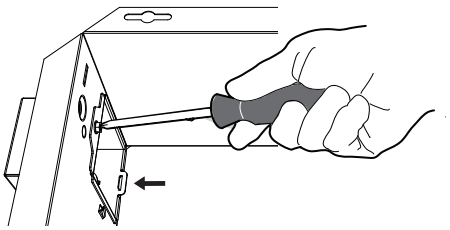

6 Re-install wiring panel and secure with screw from parts bag.

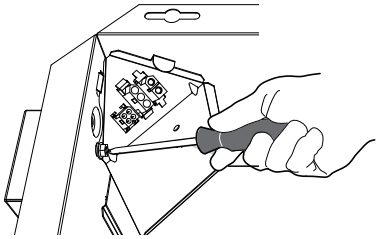

7 **Install the blower assembly and sensor with provided screws. Plug in blower. Plug in sensor.**
Note: For new construction, use mask to protect blower until ceiling is finished.

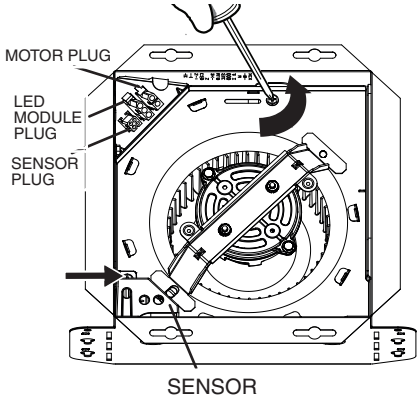

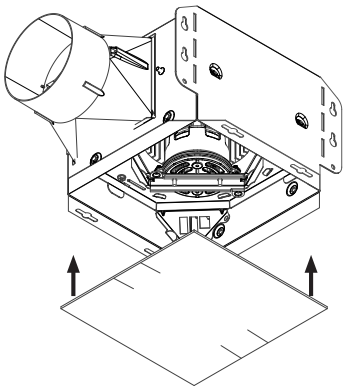

8 **Install the grille trim with screws from parts bag.**

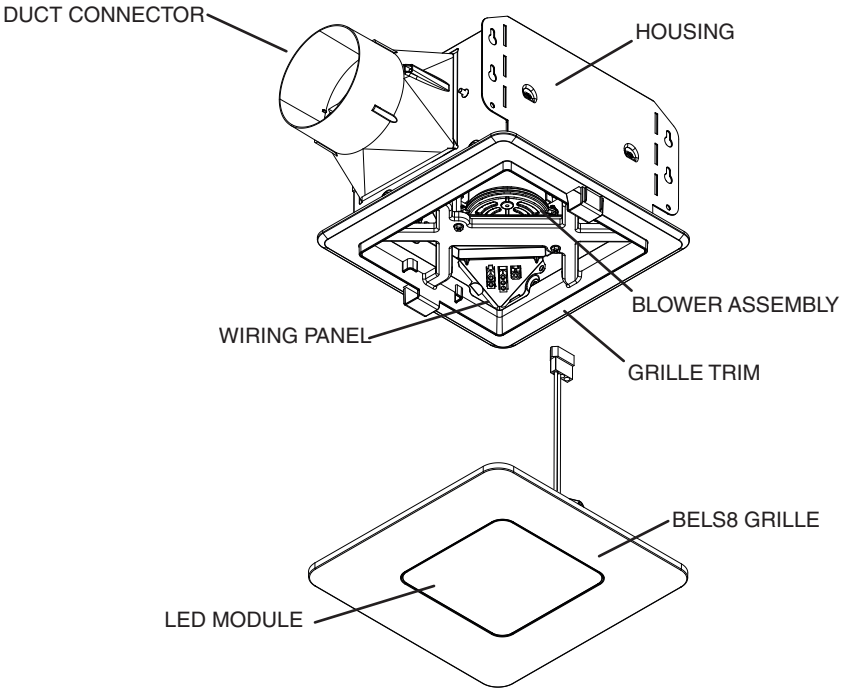

9 **Plug in LED module.**

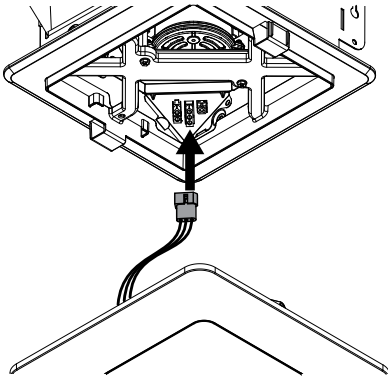

10 **Install the grille by sliding clips into grille trim.**

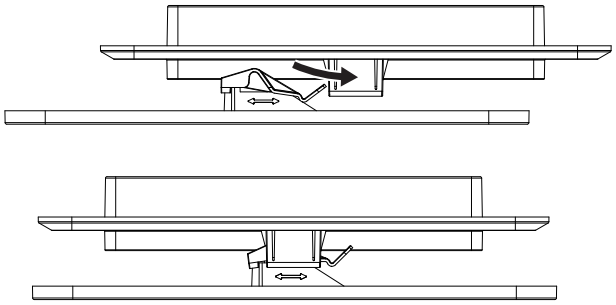

Note: Depending upon model, your grille may look different.

Ventilateur avec éclairage de série Roomside BELS8 à détecteur d'humidité
LISEZ CES DIRECTIVES ET CONSERVEZ-LES

Pour la déclaration de garantie, les pièces de rechange, l'assistance technique ou pour enregistrer votre produit, veuillez visiter notre site Web ou appeler :
Aux États-Unis : Broan-NuTone.com 800-558-1711.
Au Canada : Broan-NuTone.ca 800-567-3855.

AVERTISSEMENT

OBSERVEZ LES DIRECTIVES CI-DESSOUS AFIN DE RÉDUIRE LES RISQUES D'INCENDIE, DE CHOC ÉLECTRIQUE OU DE BLESSURES CORPORELLES :

1. N'utilisez cet appareil que de la manière prévue par le fabricant. Si vous avez des questions, communiquez avec le fabricant à l'adresse ou au numéro de téléphone indiqués dans la garantie.
2. Avant de procéder à l'entretien ou au nettoyage de l'appareil, coupez l'alimentation du panneau électrique et verrouillez l'interrupteur principal afin d'empêcher que le courant ne soit accidentellement rétabli. S'il est impossible de verrouiller l'interrupteur principal, fixez solidement un message d'avertissement bien visible, par exemple une étiquette, sur le panneau électrique.
3. La pose de l'appareil et les travaux d'électricité doivent être effectués par des personnes qualifiées conformément à la réglementation en vigueur, notamment les normes de la construction ayant trait à la protection contre les incendies.
4. Pour éviter les refoulements, l'apport d'air doit être suffisant pour brûler les gaz produits par les appareils à combustion et les évacuer dans le conduit de fumée (cheminée). Respectez les directives du fabricant de l'appareil de chauffage et les normes de sécurité, notamment celles publiées par la National Fire Protection Association (NFPA), l'American Society for Heating, Refrigeration and Air Conditioning Engineers (ASHRAE) et les codes des autorités locales.
5. Veillez à ne pas endommager le câblage électrique ou d'autres équipements non apparents lors de la découpe ou du perçage du mur ou du plafond.
6. Les ventilateurs canalisés doivent toujours rejeter l'air à l'extérieur.
7. Cet appareil peut être installé au-dessus d'une enceinte de baignoire ou de douche s'il est branché sur un circuit de dérivation protégé par un disjoncteur différentiel de fuite à la terre (installation au plafond seulement).
8. Cet appareil doit être relié à une mise à la terre.
9. Ne pas utiliser ce ventilateur avec une commande de vitesse à semi-conducteur.
10. Ne pas utiliser de pièces de rechange non recommandées par Broan NuTone LLC.
11. Si le ventilateur produit un bruit excessif ou s'il y a un bruit, une odeur ou de la fumée inhabituels, débrancher la source d'alimentation et contacter le service à la clientèle.
12. Il est recommandé de porter des lunettes et des gants de sécurité lors de l'installation, de l'entretien ou du nettoyage de cet appareil afin de réduire le risque de blessure causée par la présence d'arête vive et/ou de pièces mobiles.

ATTENTION

1. Pour ventilation générale uniquement. N'utilisez pas cet appareil pour évacuer des matières ou des vapeurs dangereuses ou explosives.
2. Installer le ventilateur à au moins 2,4 m (8 pi) au-dessus du plancher.
3. Pour éviter d'endommager les roulements du moteur, de déséquilibrer les pales ou de les rendre bruyantes, débarrassez l'appareil de la poussière de plâtre, de construction, etc.
4. NE PAS TOUCHER LA CARTE DE CIRCUIT IMPRIMÉ DE DÉTECTION D'HUMIDITÉ. Une décharge électrostatique pourrait endommager le circuit imprimé.
5. Veuillez lire l'étiquette de spécifications du produit pour obtenir plus de renseignements, notamment sur les exigences.

NETTOYAGE ET ENTRETIEN

POUR NETTOYER LA GRILLE : Enlever la grille et la bordure de la grille. Les pièces en plastique peuvent être nettoyées avec un détergent doux, tel du liquide à vaisselle. Sécher à l'aide d'un chiffon doux. NE PAS UTILISER DE TISSU ABRASIF, DE TAMPON À RÉCURER OU DE POUDRES À RÉCURER.

POUR NETTOYER L'INTÉRIEUR DE L'APPAREIL : Une fois la grille et la bordure de la grille enlevées, nettoyez l'intérieur de l'appareil avec un aspirateur muni d'une brosse à épousseter.

NETTOYAGE DU DÉTECTEUR : Enlever la grille et la bordure de la grille. À l'aide d'un chiffon à épousseter, d'une brosse à dents propre ou d'un aspirateur, nettoyer délicatement le détecteur et la grille. NE PAS UTILISER DE CHIFFONS ABRASIFS, DE LAINE D'ACIER NI DE POUDRE À RÉCURER. NE PAS UTILISER de nettoyant en vaporisateur, ni de solvant ni d'eau sur le détecteur ou à proximité!

Le moteur est lubrifié en permanence et n'a pas besoin d'être huilé. Si les roulements du moteur sont anormalement bruyants, remplacez l'ensemble de ventilateur (incluant le moteur et la roue à ailettes).

FONCTIONNEMENT

Utiliser un interrupteur marche/arrêt pour faire fonctionner le ventilateur et le détecteur. Il est possible de faire fonctionner le ventilateur, l'éclairage et le détecteur séparément si une commande murale à trois fonctions est utilisée.
Consulter le catalogue Broan-NuTone pour obtenir la ligne d'accessoires/de commandes complète qui vous permettra d'adapter adéquatement ces ventilateurs selon vos besoins.

FONCTIONNEMENT DU DÉTECTEUR
Pour activer le détecteur d'humidité, mettre l'interrupteur du détecteur d'humidité en position marche. Le ventilateur fonctionnera automatiquement lorsque le point de consigne sera atteint et s'arrêtera automatiquement à la fin de la minuterie. Le détecteur d'humidité peut à l'occasion mettre le ventilateur en marche lorsque les conditions ambiantes changent.

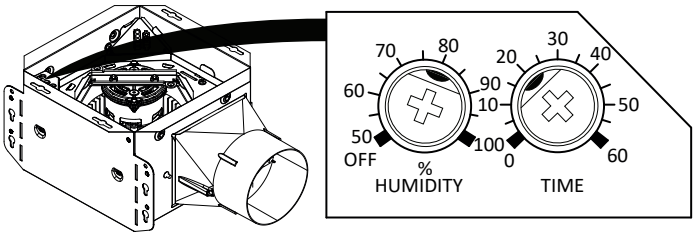

RÉGLAGE DU % D'HUMIDITÉ

Pour ajuster le % D'HUMIDITÉ :

1. Couper le courant au panneau d'alimentation électrique.
2. À l'aide d'un petit tournevis, tourner soigneusement la commande %HUMIDITY au niveau souhaité. Si le ventilateur ne réagit pas aux variations d'humidité, le régler sur 50%. Si le ventilateur réagit trop souvent aux variations d'humidité, le régler sur 100%.
3. Mettre l'alimentation sous tension.
4. Répéter les étapes ci-dessus au besoin.

RÉGLAGE DES MINUTES (MINUTERIE)

Ce ventilateur à détecteur d'humidité comporte une minuterie qui détermine combien de temps le ventilateur reste en marche une fois le taux d'humidité revenu au point de consigne réglé par l'utilisateur.

Pour ajuster la minuterie :

1. Couper le courant au panneau d'alimentation électrique.
2. À l'aide d'un petit tournevis, tourner soigneusement la commande MINUTES pour augmenter ou pour diminuer la durée.
3. Mettre l'alimentation sous tension.
4. Répéter les étapes ci-dessus au besoin.

Si le ventilateur ne réagit pas tel que souhaité suite aux ajustements, contacter l'assistance technique de Broan.

MISE EN MARCHE MANUELLE

Pour actionner manuellement le ventilateur :

- Mettre l'interrupteur du ventilateur en position marche

ou

- Effectuer un cycle avec l'interrupteur du détecteur d'humidité (marche/arrêt/marche).

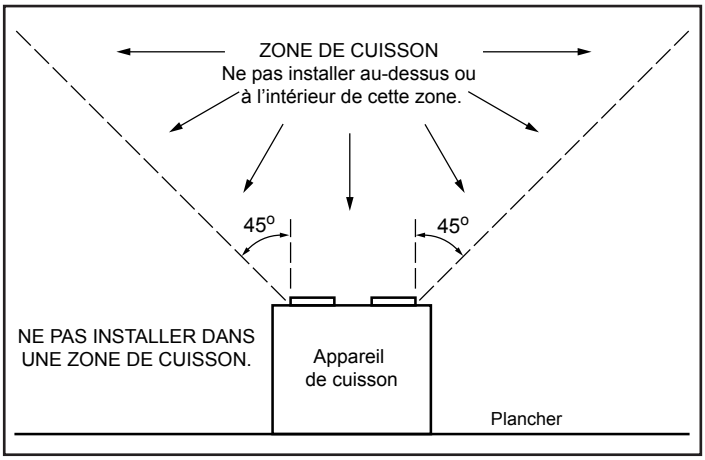

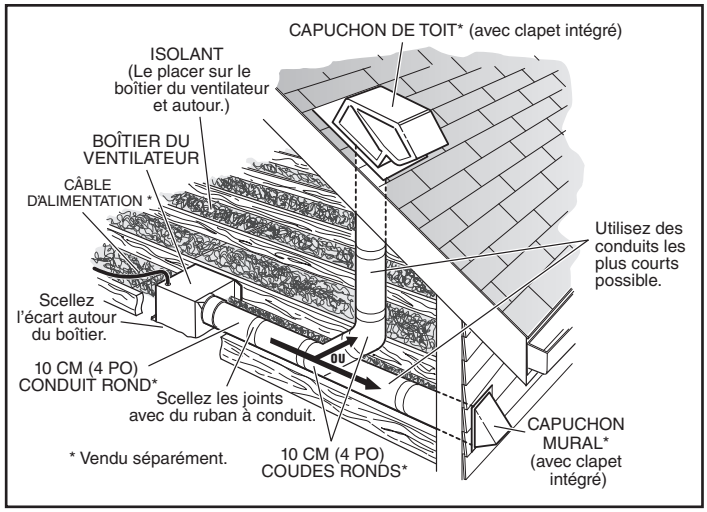

IMPORTANT - Les conduits allant de ce ventilateur jusqu'à l'extérieur de l'habitation ont une grande influence sur le débit d'air, le bruit du ventilateur et sa consommation d'énergie. Pour obtenir le meilleur rendement, utilisez les conduits les plus courts et les plus droits possible et évitez d'utiliser des conduits plus petits que ceux recommandés. L'isolation des conduits peut contribuer à réduire les pertes d'énergie et éviter la prolifération de moisissures. Les ventilateurs installés sur d'anciens conduits pourraient ne pas produire leur débit d'air nominal.

OPTION - Pour installer le boîtier n'importe où entre les solives du plafond : Utilisez l'ensemble de barres de suspension offert en option (vendu séparément chez votre distributeur local ou site Web). Suivez les instructions accompagnant l'ensemble.

GUIDE DE DÉMARRAGE RAPIDE

1 Déballer. Enlever l'assemblage du ventilateur et le panneau du câblage.

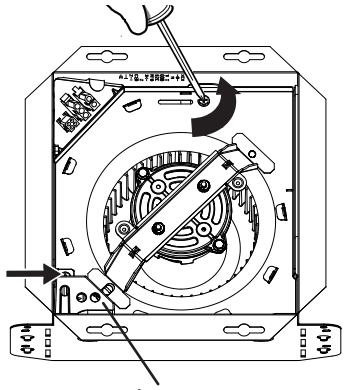

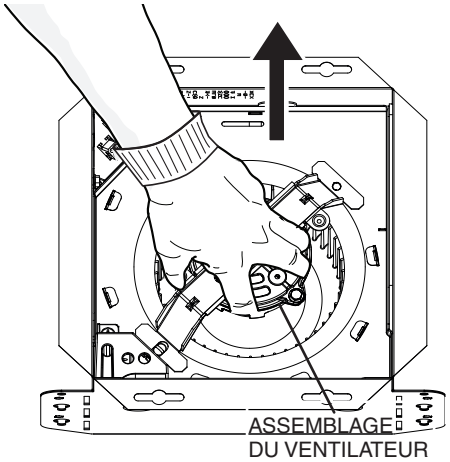

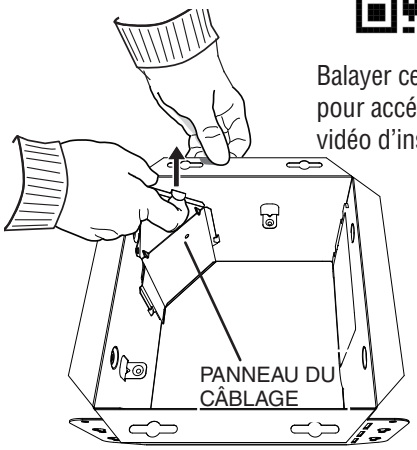

Balayer ce code QR pour accéder à une vidéo d'installation.

2 Installer le boîtier.
Choisir une option pour installer le boîtier à la charpente du plafond :

Nouvelle construction

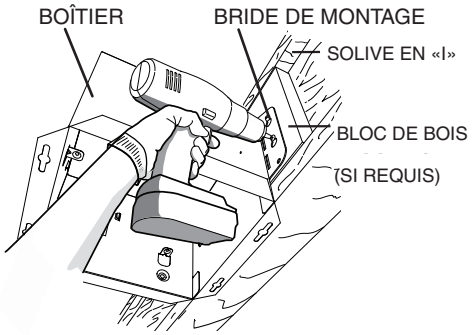

Autres options :

- Support de montage (vendu séparément numéro de modèle MHB4)
- Installation sur bride (voir la vidéo d'installation)

ou

Rénovation

Note : S'il s'agit d'une installation pour rénovation, plier les brides vers l'intérieur et utiliser le masque qui fait partie de l'emballage pour découper l'ouverture à la bonne dimension.

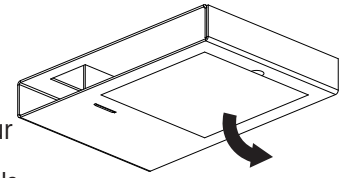

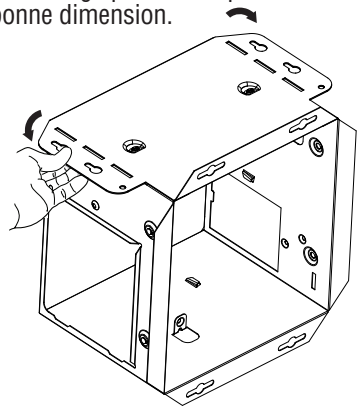

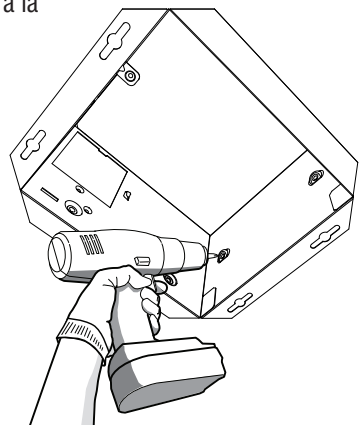

3 Choisir une option pour raccorder le connecteur de conduit.

Nouvelle construction

Installer le connecteur de conduit (utiliser la vis dans le sac de pièces et s'assurer que les ergots s'engagent dans le boîtier), puis raccorder le conduit de la nouvelle construction avec du ruban d'aluminium.

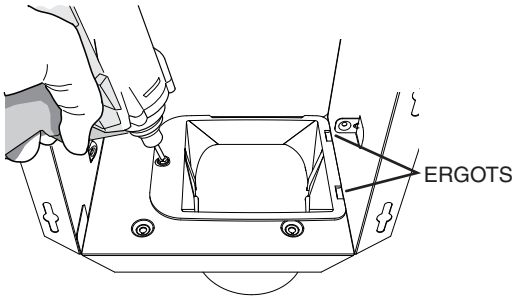

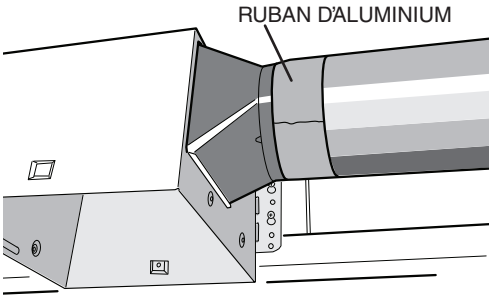

ou

Rénovation

Tirer le conduit dans le boîtier et raccorder au connecteur de conduit avec du ruban d'aluminium, puis installer le connecteur de conduit (utiliser la vis dans le sac de pièces et s'assurer que les ergots s'engagent dans le boîtier).

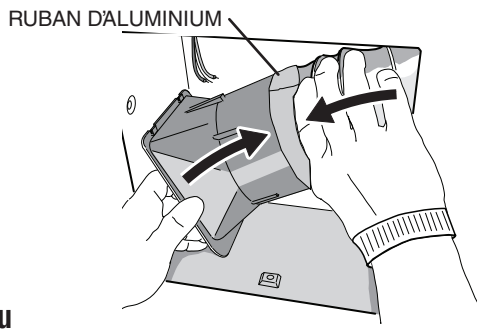

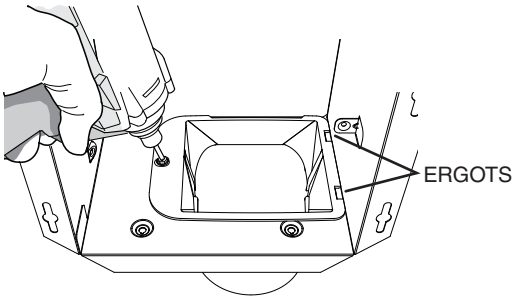

Conseil : La première et la dernière section de 18 po de conduit doit être rigide ou étirée pour obtenir le rendement attendu.

4 Effectuer les branchements.

Balayer ce code QR pour des conseils.

OPTION DE BRANCHEMENT # 1

- Lorsque le premier commutateur (1) est en position marche, le ventilateur fonctionne automatiquement en fonction des conditions d'humidité ambiante.
- Mettre immédiatement le ventilateur en marche pendant la période programmée (pour contrôler les odeurs) en effectuant un cycle avec le premier commutateur (marche/arrêt/marche).
- Utiliser le deuxième commutateur (2) pour allumer/éteindre l'éclairage.
- Avec le branchement optionnel illustré, le ventilateur sera toujours en marche lorsque l'éclairage est allumé.

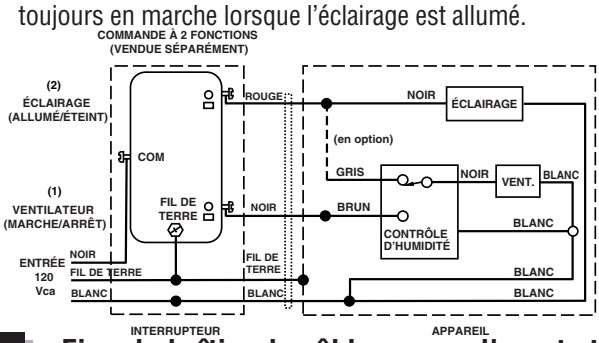

OPTION DE BRANCHEMENT # 2

- Lorsque le premier commutateur (1) est en position marche, le ventilateur fonctionne automatiquement en fonction des conditions d'humidité ambiante.
- Mettre immédiatement le ventilateur en marche (pour contrôler les odeurs) en utilisant le deuxième commutateur (2).
- Utiliser le troisième commutateur (3) pour allumer/éteindre l'éclairage.

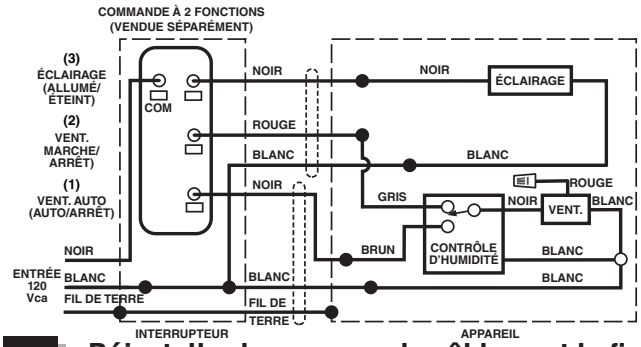

5 Fixer le boîtier du câblage avec l'ergot et la vis.

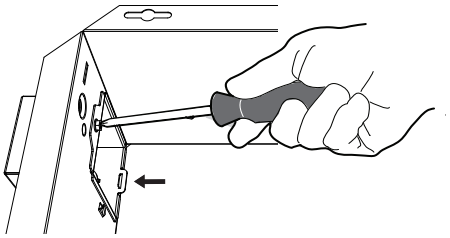

6 Réinstaller le panneau du câblage et le fixer avec la vis dans le sac de pièces.

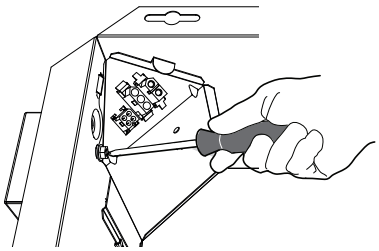

7 **Installer l'assemblage du ventilateur et le détecteur à l'aide des vis fournies. Brancher le ventilateur. Brancher le détecteur. Note :** Dans le cas d'une nouvelle construction, utiliser le masque pour protéger le ventilateur jusqu'à ce que le plafond soit fini.

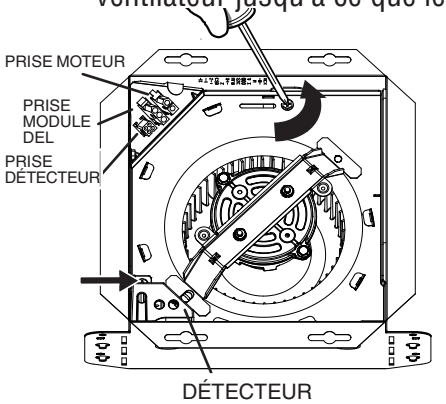

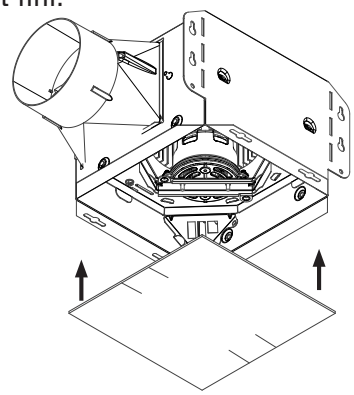

8 **Installer la bordure de la grille à l'aide des vis dans le sac de pièces.**

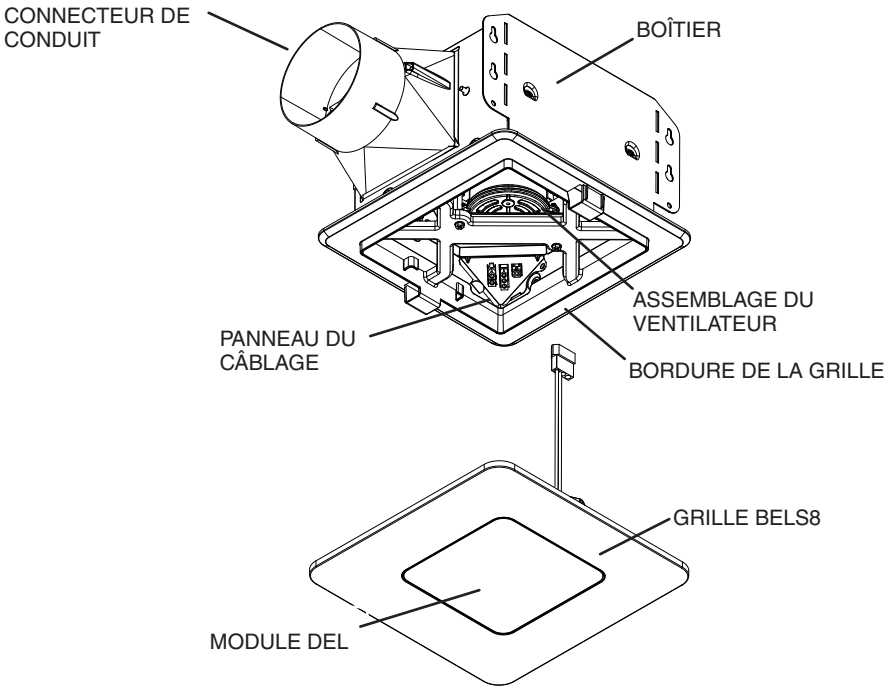

9 **Brancher le module DEL.**

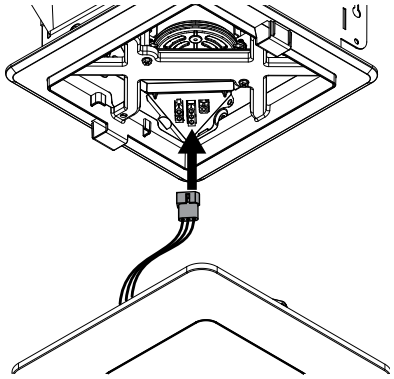

10 **Installer la grille en glissant les clips dans la bordure de la grille.**

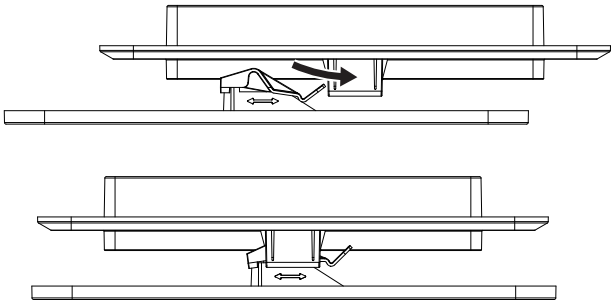

Note : La grille peut différer selon le modèle.

MXZ-3D24NL
23,600 BTU/H HEAT PUMP OUTDOOR UNIT

Job Name:

System Reference: Date:

GENERAL FEATURES

- Compact, small chassis
- Compressor overcurrent detection
- Compressor thermal protection
- Fan motor overheating/voltage protection
- Freeze-prevention base pan heater equipped as standard
- High-pressure protection
- Prolonged heating over an extended duration
- Quiet outdoor unit operation as low as 52 dB(A)
- Rated for 2,000 hours spraying time per ASTM B117 Standard
- Variable speed INVERTER-driven compressor
- Blue Fin anti-corrosion treatment applied to the outdoor unit heat exchanger for increased coil protection and longer life

Specifications			System
Unit Type			MXZ-3D24NL
Cooling at 95F[1] (Non-Ducted // Mixed // Ducted)	Maximum Capacity	Btu/h	22,000 // 22,000 // 22,000
	Rated Capacity	Btu/h	22,000 // 22,800 // 23,600
	Minimum Capacity	Btu/h	11,600 // 11,300 // 11,000
	Maximum Power Input	W	4,040 // 3,370 // 2,700
	Rated Power Input	W	1,605 // 1,811 // 2,017
	Power Factor (208V)	%	0.99 // 0.99 // 0.99
	Power Factor (230V)	%	0.99 // 0.99 // 0.99
Heating at 47F[2] (Non-Ducted // Mixed // Ducted)	Maximum Capacity	Btu/h	30,600 // 30,600 // 30,600
	Rated Capacity	Btu/h	25,000 // 25,200 // 25,400
	Minimum Capacity	Btu/h	13,600 // 13,200 // 12,800
	Maximum Power Input	W	3,700 // 3,900 // 4,100
	Rated Power Input	W	1,704 // 1,806 // 1,909
	Power Factor (208V)	%	0.99 // 0.99 // 0.99
	Power Factor (230V)	%	0.99 // 0.99 // 0.99
Heating at 17F[3] (Non-Ducted // Mixed // Ducted)	Maximum Capacity	Btu/h	21,000 // 21,000 // 21,000
	Rated Capacity	Btu/h	15,500 // 15,600 // 16,000
	Maximum Power Input	W	2,960 // 2,960 // 2,960
	Rated Power Input	W	1,465 // 1,565 // 1,711
Heating at 5F[4] (Non-Ducted // Mixed // Ducted)	Maximum Capacity	Btu/h	19,800 // 19,800 // 19,800
	Maximum Power Input	W	2,817 // 2,872 // 2,900
Efficiency (Non-Ducted // Mixed // Ducted)	SEER2[1]		20 // 18 // 16
	EER2[1]		13.70 // 12.70 // 11.70
	HSPF2 (IV)[2]		10 // 9.30 // 8.60
	COP at 47°F[2]		4.3 // 4.1 // 3.9
	COP at 17°F at Maximum Capacity[3]		2.06 // 2.06 // 2.06
	COP at 5°F at Maximum Capacity[4]		2.06 // 2.02 // 2
	ENERGY STAR® Certified		Yes // Yes // Yes
Electrical	Electrical Power Requirements	V AC / V AC, ø, Hz	208 / 230, 1, 60
	Guaranteed Voltage Range	V AC	198 - 253
	Voltage: Indoor - Outdoor, S1-S2	V AC	208/230
	Voltage: Indoor - Outdoor, S2-S3	V DC	24
	Recommended Wire Size (Indoor - Outdoor)	AWG	14
	Short-circuit Current Rating (SCCR)	kA	5
	MCA	A	28.7
	MOCP	A	48

NOTES
[1]Cooling at 95°F (Indoor: 80°F DB, 67°F WB // Outdoor: 95°F DB, 75°F WB)
[2]Heating at 47°F (Indoor: 70°F DB, 60°F WB // Outdoor: 47°F DB, 43°F WB)
[3]Heating at 17°F (Indoor: 70°F DB, 60°F WB // Outdoor: 17°F DB, 15°F WB)
[4]Heating at 5°F (Indoor: 70°F DB, 60°F WB // Outdoor: 5°F DB, 4°F WB)
Capacity varies based on the number of indoor units operating and the model of the Multi-zone Outdoor Unit. For reference to connected capacity charts, please refer to Multi-zone Outdoor Unit Operational Performance.
For actual capacity performance based on indoor unit type and number of indoor units connected, please refer to MXZ Operational Performance.
Although the maximum connectable capacity is 130%, the outdoor unit cannot provide more than 100% of the rated capacity.
Please utilize this over capacity capability for load shedding or applications where it is known that all connected units will NOT be operating at the same time.
* Indoor/Outdoor Unit Operating Temperature Range (Cooling Air Temp [Maximum / Minimum]):
• Applications should be restricted to comfort cooling only; equipment cooling applications are not recommended for low ambient temperature conditions.
** Outdoor Unit Operating Temperature Range (Cooling Thermal Lock-out / Re-start Temperatures; Heating Thermal Lock-out / Re-start Temperatures):
• System cuts out in heating mode and automatically restarts at these temperatures.

Specifications are subject to change without notice.

© 2025 Mitsubishi Electric Trane HVAC US LLC. All rights reserved.

SPECIFICATIONS: MXZ-3D24NL

Specifications			System
Unit Type			MXZ-3D24NL
Outdoor Unit	Fan Motor Full Load Amperage	A	1.74
	Fan Motor Output	W	88
	Defrost Method		Reverse Cycle
	Blue Fin Heat Exchanger Coating		Yes
	Airflow Rate Cooling/Heating	CFM	2,119 / 2,228
	Sound Pressure Level, Cooling[1]	dB (A)	51
	Sound Pressure Level, Heating[2]	dB (A)	55
	Compressor Type		Twin Rotary
	Compressor Model		SRB220FQYMC-L
	Compressor Oil Type // Charge	Type // oz	RM68EH // 20.3
	External Finish Color		Munsell 3.0Y 7.8/1.1
	Base Pan Heater		Optional
	Unit Dimensions (W x D x H)	inch x inch x inch [mm x mm x mm]	37-11/32 x 13 x 31-11/32 [950 x 330 x 796]
	Package Dimensions (W x D x H)	inch x inch x inch [mm x mm x mm]	41-11/32 x 17-5/16 x 38-31/32 [1,050 x 440 x 990]
	Unit Weight	lbs [kg]	137 [62]
	Package Weight	lbs [kg]	163 [74]
ODU Operating Temp. Range	Cooling Intake Air Temp (Maximum / Minimum)	°FDB	115 / 14
	Cooling Thermal Lock-out / Re-start Temperatures	°FDB	10 / 14
	Heating Intake Air Temp [Maximum / Minimum]	°FDB, °FWB / °FDB, °FWB	75, 65 / 6, 5
	Heating Thermal Lock-out / Re-start Temperatures**	°FDB	-4 / 5
Refrigerant	Type		R454B
	Pre-Charged Refrigerant Amount	lbs, oz	5, 5
	Maximum Pre-Charged Piping Length	ft	230
IDU Connection	Minimum Number of Connected IDU		2
	Maximum Number of Connected IDU		3
	Minimum Connected Capacity	Btu/h	12,000
	Maximum connected capacity	Btu/h	28,000
Piping	Liquid Pipe Size O.D. (Flared)	inch	A: 1/4 B: 1/4 C: 1/4
	Gas Pipe Size O.D. (Flared)	inch	A: 1/2 B: 3/8 C: 3/8
	Total Piping Length	ft [m]	230 [70]
	Farthest Piping Length	ft [m]	82 [25]
	Maximum Height Difference, ODU above IDU	ft [m]	49 [15]
	Maximum Height Difference, ODU below IDU	ft [m]	49 [15]
	Maximum Number of Bends for IDU		70

NOTES
[1]Cooling at 95°F (Indoor: 80°F DB, 67°F WB // Outdoor: 95°F DB, 75°F WB)
[2]Heating at 47°F (Indoor: 70°F DB, 60°F WB // Outdoor: 47°F DB, 43°F WB)
[3]Heating at 17°F (Indoor: 70°F DB, 60°F WB // Outdoor: 17°F DB, 15°F WB)
[4]Heating at 5°F (Indoor: 70°F DB, 60°F WB // Outdoor: 5°F DB, 4°F WB)
Capacity varies based on the number of indoor units operating and the model of the Multi-zone Outdoor Unit. For reference to connected capacity charts, please refer to Multi-zone Outdoor Unit Operational Performance.
For actual capacity performance based on indoor unit type and number of indoor units connected, please refer to MXZ Operational Performance.
Although the maximum connectable capacity is 130%, the outdoor unit cannot provide more than 100% of the rated capacity.
Please utilize this over capacity capability for load shedding or applications where it is known that all connected units will NOT be operating at the same time.
* Indoor/Outdoor Unit Operating Temperature Range (Cooling Air Temp [Maximum / Minimum]):
• Applications should be restricted to comfort cooling only; equipment cooling applications are not recommended for low ambient temperature conditions.
** Outdoor Unit Operating Temperature Range (Cooling Thermal Lock-out / Re-start Temperatures; Heating Thermal Lock-out / Re-start Temperatures):
• System cuts out in heating mode and automatically restarts at these temperatures.

Specifications are subject to change without notice.

© 2025 Mitsubishi Electric Trane HVAC US LLC. All rights reserved.

OUTDOOR UNIT ACCESSORIES: MXZ-3D24NL

Mini-Split Wire	14 Gauge 4 wire Armored MiniSplit Cable250 ft roll	SW144-250
	14 Gauge 4 wire Armored MiniSplit Cable50 ft roll	SW144-50
	14 Gauge 4 wire MiniSplit Cable250 ft roll	S144-250
	14 Gauge 4 wire MiniSplit Cable50 ft roll	S144-50
	16 Gauge 4 wire Armored MiniSplit Cable250 ft roll	SW164-250
	16 Gauge 4 wire Armored MiniSplit Cable50 ft roll	SW164-50
	16 Gauge 4 wire MiniSplit Cable250 ft roll	S164-250
	16 Gauge 4 wire MiniSplit Cable50 ft roll	S164-50
Stand	18 Single Fan Stand	QSMS1801M
	24 Single Fan Stand	QSMS2401M
	Condenser Wall Bracket	QSWB2000M-1
	Condenser Wall Bracket - Stainless Steel Finish	QSWBSS
	Outdoor Unit 3-14 inch Mounting Base Pair - Plastic	DSD-400P
	Outdoor Unit Stand 12 High	QSMS1201M
Port Adaptor	Adaptor 1/2 x 3/8	PAC-SK88RJ-E
	Adaptor 1/2 x 5/8	PAC-SK89RJ-E
	Adaptor 1/4 x 3/8	PAC-493PI
	Adaptor 3/8 x 1/2	ADP3812
	Adaptor 3/8 x 5/8	PAC-SK90RJ-E
Mounting Pad	Condensing Unit Mounting Pad 16 x 36 x 3	ULTRILITE1
Ball Valve	Refrigeration Ball Valve - 1/2	BV12FFSI2
	Refrigeration Ball Valve - 1/4	BV14FFSI2
	Refrigeration Ball Valve - 3/8	BV38FFSI2
	Refrigeration Ball Valve - 5/8	BV58FFSI2
Drain Socket	Drain Socket	PAC-SG60DS-E
Snow/Rain Diverter	SnowRain Diverter	SRD-4
Optional Defrost Heater	Optional Defrost Heater	PAC-645BH-E
Control Interface	M-NET Interface for MXZ	PAC-IF01MNT-E
Hail Guards	Hail Guard	HG-A9
Control/Service Tool	Maintenance Tool Interface	PAC-USCMS-MN-1
Air Outlet Guide	Air Outlet Guide 1 Piece	PAC-SH96SG-E
NOTES		

© 2025 Mitsubishi Electric Trane HVAC US LLC. All rights reserved.

OUTDOOR UNIT DIMENSIONS: MXZ-3D24NL

MXZ-3D24NL-U1

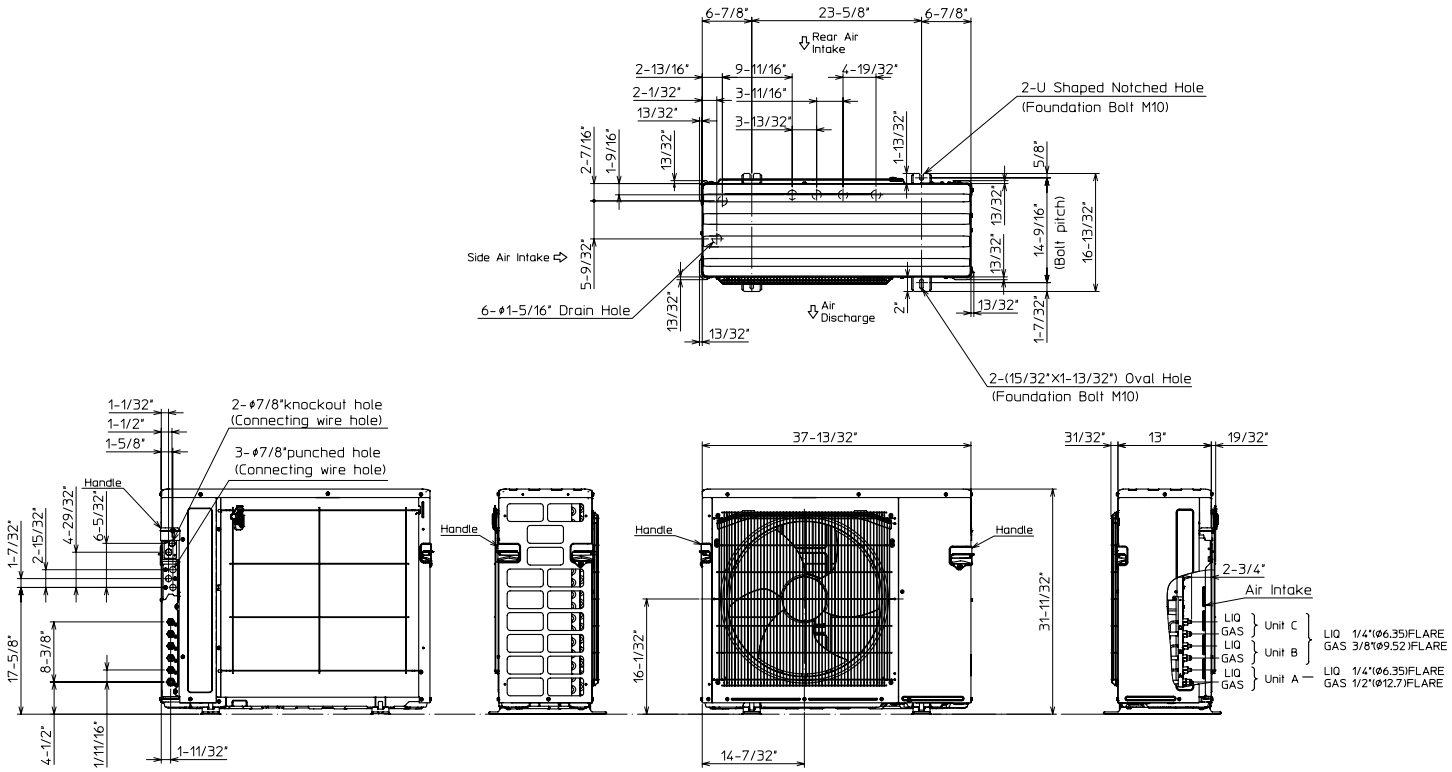

1.FREE SPACE

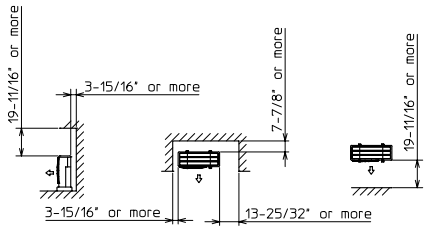

2.SERVICE SPACE

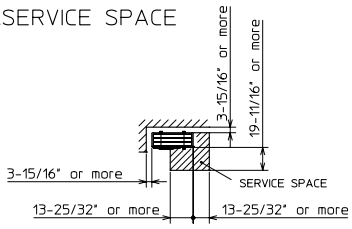

1340 Satellite Boulevard Suwanee, GA 30024
Toll Free: 800-433-4822 https://mitsubishicomfort.com

METUS_2025-03_PROPIN

Specifications are subject to change without notice.

© 2025 Mitsubishi Electric Trane HVAC US LLC. All rights reserved.

NQ Circuit Breaker Panelboards

Class 1640

Catalog

1640CT0801
R08/21

www.se.com

Legal Information

The Schneider Electric brand and any trademarks of Schneider Electric SE and its subsidiaries referred to in this guide are the property of Schneider Electric SE or its subsidiaries. All other brands may be trademarks of their respective owners.

This guide and its content are protected under applicable copyright laws and furnished for informational use only. No part of this guide may be reproduced or transmitted in any form or by any means (electronic, mechanical, photocopying, recording, or otherwise), for any purpose, without the prior written permission of Schneider Electric.

Schneider Electric does not grant any right or license for commercial use of the guide or its content, except for a non-exclusive and personal license to consult it on an "as is" basis. Schneider Electric products and equipment should be installed, operated, serviced, and maintained only by qualified personnel.

As standards, specifications, and designs change from time to time, information contained in this guide may be subject to change without notice.

To the extent permitted by applicable law, no responsibility or liability is assumed by Schneider Electric and its subsidiaries for any errors or omissions in the informational content of this material or consequences arising out of or resulting from the use of the information contained herein.

Table of Contents

Standards and Ratings 5
- Standards 6
- Ratings 6

Interiors 7
- Main Lug Interiors 7
- Main Lugs for MLO Interiors 7
- Main Circuit Breaker Interiors 9
- Interior Accessories 11
- Fingersafe IP2X per IEC 60529 Barriers for NQ Panelboards 12

Separated Distribution and Split Bus Panelboards 14

Branch Circuit Breakers (Bolt-on and Plug-on) 15

Lighting Contactors 17

Neutrals 18
- Auxiliary Neutral Lugs 19
- Neutral Bonding Provisions 20

Ground Bar Kits 21
- Ground Bar Insulator Kit (Catalog No. PKGTAB) 21
- Technical Information 22
- NQ 14-inch wide—up to 240 Vac or 48 Vdc 22

Surge Protection 23

Enclosures 24
- Indoor Enclosures (NEMA Types 1 and 2) 26
- Rainproof (Type 3R) and Dust Resistant (Type 5 and 12) Enclosures 28
- Corrosion-Resistant Fiberglass-Reinforced Polyester Enclosures (Type 4X) 29
- Stainless Steel Enclosures (Type 4 and 4X) 29

Single Row (Column-Width) Panelboards 30
- Cable Trough 30
- Pull Box 31
- Power and Energy Management Options 31

Typical Wiring Diagrams 32

Standards and Ratings

NQ circuit breaker panelboards meet US and Canadian standards, and are marked cULus. NQ circuit breaker panelboards accept QO™ and QOB branch circuit breakers.

Voltage	System	System Diagram
120/240 Vac	1Ø3W	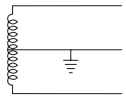
208Y/120 Vac	3Ø4W	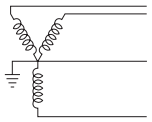
240/120 Vac	3Ø4W Delta	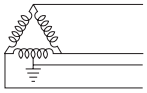
240 Vac	3Ø3W Delta	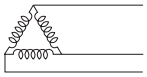
240 Vac	3Ø3W Grd. BØ Delta	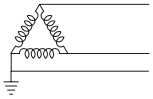
48 1Ø Vdc	1Ø2W	

Standards

NQ circuit breaker panelboards are designed, manufactured, and tested to comply with the following standards:

- UL 67—Standard for Panelboards
- UL 50—Enclosures for Electrical Equipment
- UL 50E—Enclosures for Electrical Equipment, Environmental Considerations
- CSA C22.2, No. 29—Panelboards and Enclosed Panelboards
- CSA C22.2, No. 94—Special Purpose Enclosures
- NEMA PB 1—Panelboards
- NFPA 70—National Electrical Code® (NEC®)
- Federal Specification W-P-115C Type I Class 1—Circuit Breaker Panelboards
- ASCE 7-05, ASCE 7-10, IBC 2015, IBC 2018, CBC 2016, CBC 2019, NBCC 2015 Seismic Qualification, and OSHPD Special Seismic Certification Pre-approval: OSP-0016-10
- ABS Type Certified
- International Electrotechnical Commission (IEC) 60529: 1989+AMD1:1999 +AMD2:2013 CSV Consolidated version.- Degrees of Protection Provided by Enclosures (IP Code)

Ratings

- Main Lugs 100–600 A
- Main Circuit Breaker 100–600 A

Interiors

Main Lug Interiors

225 A Maximum Main Lug Interior and Deadfront

- Will accept plug-on or bolt-on branch circuit breakers
- Top- or bottom-feed
- 65k AIR maximum branch circuit breakers (fully-rated)
- 200k AIR maximum when supplied by PowerPacT™ circuit breaker or remote Class J or T fuse (series rated)
- Field-installable sub-feed lug kits for 100–400 A interiors
- Factory installed main lugs on all interiors
- 225–600 A main lug interiors are convertible to main circuit breaker by adding a main circuit breaker and adapter kit
- Available with silver/tin-plated copper or tin-plated aluminum bus (aluminum is standard). Tin-plated or thick silver plated copper bus are available options. Branch connector fingers are tin-plated copper; thick silver-plated branch connector fingers are optional

Main Lugs for MLO Interiors

Main Lug Interiors

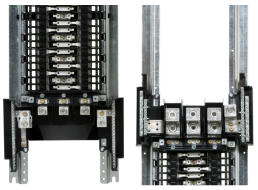

100–225 A Maximum and 600 A Maximum

Table 1 - Aluminum Main lugs for MLO Interiors

Amperes	Catalog Number	Lug Wire Range
Aluminum Mechanical (Standard)[1]		
100	NQALM1	(1) #6–2/0 AWG
225	NQALM2	(1) #6–350 kcmil
400	NQALM4	(1) 1/0–750 kcmil, or (2) 1/0–350 kcmil
600	NQALM6	(2) 1/0–750 kcmil
600[2]	NQALM6A	(3) 6–250 kcmil
Aluminum Compression		
100	NQALV1	(1) #8–1/0 AWG
225	NQALV2	(1) 4–300 kcmil
400	NQALV4	(2) 2/0–500 kcmil
600	NQALV6	(2) 2/0–500 kcmil

1. NQ MLO interiors are supplied with lugs. No selection is required if aluminum mechanical lugs are acceptable.
2. Optional lug for 600 A. Can also be used for 400 A.

NQALM2 225 A Main Lug Kit

NQALM6A 600 A Main Lug Kit

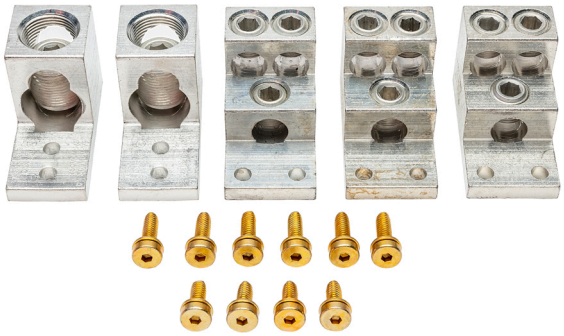

Type VCEL VERSAtile™ Compression Equipment Terminals

NQCUM2 225 A Copper Mechanical Lugs

NQCUV2 225 A Copper Compression Lugs

Table 2 - Copper Main lugs for MLO Interiors

Amperes	Catalog Number	Lug Wire Range for wire bending space
Copper Mechanical		
100	NQCUM1	(1) #6–2/0 AWG
225	NQCUM2	(1) #6–250 kcmil
400	NQCUM4	(1) 1/0–750 kcmil, or (2) 1/0–350 kcmil
600	NQCUM6	(1) 1/0–750 kcmil, or (2) 1/0–350 kcmil
Copper Compression		
100	NQCUV1	(1) #6–1/0 AWG
225	NQCUV2	(1) 2/0–300 kcmil
400	NQCUV4	(1) 400–750 kcmil
600	NQCUV6	(2) 250–500 kcmil

Main Lugs Interior with PowerPacT Q Main Circuit Breaker and Main Circuit Breaker Kit

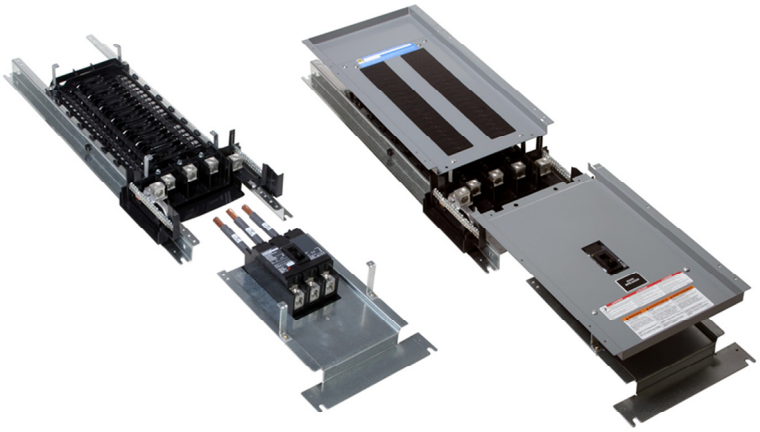

Deadfront Removed **Deadfront Installed**

NQ442L2 Main Lugs Interior (without deadfront) and QBL32225 Main Circuit Breaker (mounted to NQMB2Q kit)

Main Circuit Breaker Interiors

QOB Branch Mounted Main Circuit Breaker on a 225 A NQ Interior

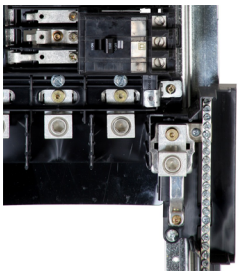

QBL Main Circuit Breaker on a 3-phase NQ Main Lug Interior

- May be assembled from merchandised main lug interiors, main circuit breaker, and main circuit breaker kits.
- Will accept plug-on or bolt-on branch circuit breakers.
- Merchandised main circuit breaker interiors are suitable for use as service entrance (US only).
- Barriers must be installed in jurisdictions that have adopted 2017 NFPA 70—National Electric Code® (NEC®).

Table 3 - UL Service Entrance Barrier Kits

Catalog Number[3]	Description	Applicable Main Breakers
HJQLLC	H/J/Q Line Lug Cover	PowerPacT H, J, Q
LALLC	LA/LH Line Lug Cover	LA/LH
PPLLC	PowerPacT L Line Lug Cover	PowerPacT L

- Service entrance barriers are required and available in Canada (factory-assembled only).
- May be top-feed or bottom-feed.
- Accept 65k AIR maximum branch circuit breakers (fully-rated).
- May be series rated 200k AIR maximum when supplied by PowerPacT circuit breaker.
- Are available with silver/tin plated copper or tin-plated aluminum bus (aluminum is standard). Tin-plated or silver-plated copper bus is available as an option. Branch connector fingers are tin-plated copper; silver-plated branch connector fingers are optional.
- 100 A main circuit breaker interiors may be assembled from a standard or 14” wide 100 A main lug interior, and either
  - an appropriate QOB or QOB-VH main circuit breaker in a branch spaces, or
  - a PowerPacT H-frame vertical main breaker, and a main breaker kit (NQMB2HJ), or (NQMB2HJ14 for NQ 14" wide interiors).
- 110–150 A main circuit breaker panelboards may be assembled with backfed main breaker from:
  - A standard 225 A main lug interior.
  - Appropriate QOB-VH frame circuit breaker installed in branch spaces.
- 110–225 A main circuit breaker panelboards may be assembled with a vertical main breaker from:
  - A standard or 14” wide 225 A main lug interior.
  - Main circuit breaker adaptor kit (NQMB2Q, NQMB2HJ) (or NQMB2Q14 or NQMB2HJ14 for 14" interiors).
  - Appropriate PowerPacT H-, J-, or Q-frame circuit breaker
- 250 A main circuit breaker interiors are factory-assembled only.
- Merchandised 250 to 400 A main circuit breaker interiors consist of:
  - 400 A 3-phase or single phase main lug interior.
  - Main circuit breaker adapter kit (Catalog No. NQMB4LA or NQMB6PPL).
  - Appropriate LA or LH (with NQMB4LA) or LG, LJ, or LL (with NQMB6PPL) circuit breaker.[4]

3. Main circuit breaker panels are supplied with UL service entrance barriers if "UL Service Entrance" is selected as a requirement in SE Advantage.
4. PowerPacT L-frame main breakers require a 8.75 in. (222 mm) deep NEMA Type 1 enclosure. They are only available factory assembled with 26" (660 mm) wide, 8.75" (222 mm) deep NEMA 3R enclosures.

- Factory assembled 400 A main circuit breakers are available with LA, LH, or PowerPacT L[5] main circuit breakers.
- Merchandised 600 A main circuit breaker interiors consist of:
  - 600 A 3-phase or single phase main lug interior.
  - Main circuit breaker adapter kit (Catalog No. NQMB6PPL).
  - Appropriate PowerPacT L (LG, LJ, or LL) circuit breaker.[5]
- Factory assembled 600 A main circuit breakers are available with PowerPacT L (LG, LJ, or LL) main circuit breakers.

Main Circuit Breaker Adapter Kit

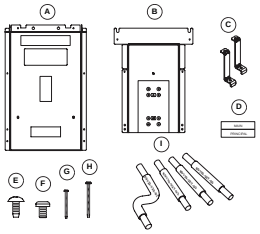

Hardware not shown to scale

Table 4 - NQMB2Q Kit Contents

A	Main circuit breaker deadfront cover (1)
B	Main circuit breaker mounting pan (1)
C	Deadfront support brackets (2)
D	“Main” circuit breaker label (1)
E	10-32 x 7/16-inch tapping screws (2)
F	10-32 x 5/16-inch tapping screws (6)
G	8-32 x 2 ¼-inch tapping screws (2)
H	8-32 x 3 ¼-inch tapping screws (2)
I	Main lug wires (4)

Table 5 - Main Circuit Breaker Adapter Kits

Catalog No.	Ampere Rating	Main Circuit Breaker
NQMB2Q	100–225 A	PowerPacT Q
NQMB2HJ	100–225 A	PowerPacT H or J
NQMB4LA	125–400 A	LAL, LHL
NQMB6PPL	125–600 A	PowerPacT L

NQMB4LA, 400 A LA/LH Main Breaker Kit

NQMB6PPL—PowerPacT L Main Breaker Kit

Table 6 - Main Circuit Breakers

Max. Amperes	Circuit Breaker Type
100 A	HD, HG, HJ, HL, HR, QOB[6], QOB-VH[6]
150 A	HD, HG, HJ, HL, HR, QB, QD, QG, QJ, or QOB-VH[7]
225 A	QB, QD, QG, QJ, JD, JG, JJ, JL, or JR
250 A	PowerPacT J-frame[8]: JD, JG, JJ, JL, or JR
400 A	LA or LH
	PowerPacT L-frame[9]: LG, LJ, or LL
600 A	PowerPacT L-frame[9]: LG, LJ, or LL

Field-Installable Circuit Breaker Accessories

Field-installable shunt trip, alarm switch, and other accessories are available for PowerPacT H, J, L and LA/LH main circuit breakers. Refer to Catalog 0616CT1001 or 0601CT9101 for additional information.

5. PowerPacT L-frame main breakers require a 8.75 in. (222 mm) deep NEMA Type 1 enclosure. They are only available factory assembled with 26" (660 mm) wide, 8.75" (222 mm) deep NEMA 3R enclosures.
6. Backfed main circuit breaker.
7. QOB-VH backfed main breaker—110 A to 150 A breakers require two spaces per pole.
8. Factory assembled only.
9. PowerPacT L-frame main breakers require a 8.75 in. (222 mm) deep NEMA Type 1 or 3R enclosures.

Interior Accessories

QOB3125SL Sub-Feed Lug Device

NQSFL4, 400 A Sub-Feed Lug Kit

NQFTL2, 225 A Feed-Through Lug Kit

225 A Main Lug Interior with Sub-Feed Lugs

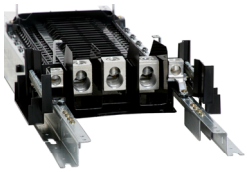

Sub-Feed Lug Kits

Table 7 - Branch Mounted Sub-Feed Lugs

Rating Amperes	Number of Poles	Type of Connection	Catalog No.	Main Wire Size
125	2	Bolt-On	QOB2125SL	#12–2/0 Al or Cu
	3		QOB3125SL	

Field-Installable Sub-Feed Lugs

Table 8 - Field-Installable Sub-Feed Lugs

Mains Rating	Added Length[10]	Catalog No.
100 A	—	NQSFL1
225 A	6 Inches	NQSFL2
400 A	—	NQSFL4

Table 9 - Field installable Feed-Through Lugs

Mains Rating	Interior Circuits	Added Length[10]	Catalog No.
225 A	30	6 inches	NQFTL2L
	42	—	
	54, 72, 84	6 inches	NQFTL2H
400 A	30	—	NQFTL4L
	42	6 inches	
	54, 72	6 inches	NQFTL4H
	84	—	

Field Installable Sub-Feed Circuit Breaker Kits

Table 10 - Field Installable Sub-Feed Circuit Breaker Catalog Numbers

Catalog Number	Interior Amperes	Circuit Breaker Frame	Max. SFB Amps	Number of SFBs
NQSFB2Q	225 A	PowerPacT Q	225	1
NQSFB2HJ	225 A	PowerPacT H	150	1
		PowerPacT J	225	
NQSFB4Q	400 / 600 A	PowerPacT Q	225	2
NQMB6PPL	400 / 600 A	PowerPacT L	400	1
NQSFB6PPL	600 A	PowerPacT L	600	1

10. Refer to Digest 178 for the correct box size.

225 A Main Lug Interior with Feed-Through Lugs

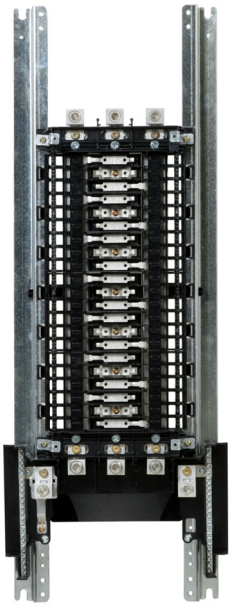

Factory-Installed Sub-Feed and Feed-Through Options

- Feed-through lugs are available on standard width 1Ø or 3Ø, 100–600 A interiors (main lug interiors only).
- Sub-feed lugs are available on 1Ø or 3Ø, 100–400 A main lug interiors only.
- Sub-feed circuit breakers
  - Available on 1Ø or 3Ø, main lugs 225–600 A interiors (main lug or main breaker)
  - One PowerPacT H-, J-, or Q-frame sub-feed circuit breaker for each 225 A panelboard
  - One 400–600 A max., or two 250 A max. sub-feed circuit breakers for each 400–600 A panelboard
    - Sub-feed circuit breakers may be LA/LH, or PowerPacT H-, J-, L-, or Q-frame.

Fingersafe IP2X per IEC 60529 Barriers for NQ Panelboards

- Factory-installed IP2X barriers for NQ Panelboards reduce the risk of accidental contact with energized components if a cover is removed.
- Plastic barriers cover Mains (lugs or circuit breaker), copper bus, and branch circuit breakers, providing IP2X per IEC 60529 protection for undergrounded parts.
- Available in 3 phase interiors with main lugs up to 400 A. Main circuit breaker choices include PowerPacT Q-, H-, J- or LA/LH frame.
- Series rated up to 200 kAIC—fully rated up to 65 kA.
- Selectively coordinated up to 30 kAIC.
- All standard NEMA 1, 2, 3R, 4/4X, 5, or 12 enclosures available up to 225 A. Higher ampacity panels are supplied with NEMA 1 enclosures.
- Branch circuit breakers available to 100 A in 1P, 2P, and 3P.
- Two factory assembled constructions:
  - Standard design that offers maximum flexibility, including interiors with 18–84 circuits, and sub-feed lugs up to 225 A.
  - Enhanced design that retains IP2X per IEC 60529 protection whether or not a branch circuit breaker is installed.
    - Enhanced IP2X three phase, 42 circuit interiors are available with copper bus rated for 225 A or 400 A.

Standard IP2X per IEC 60529 **Enhanced IP2X per IEC 6052**

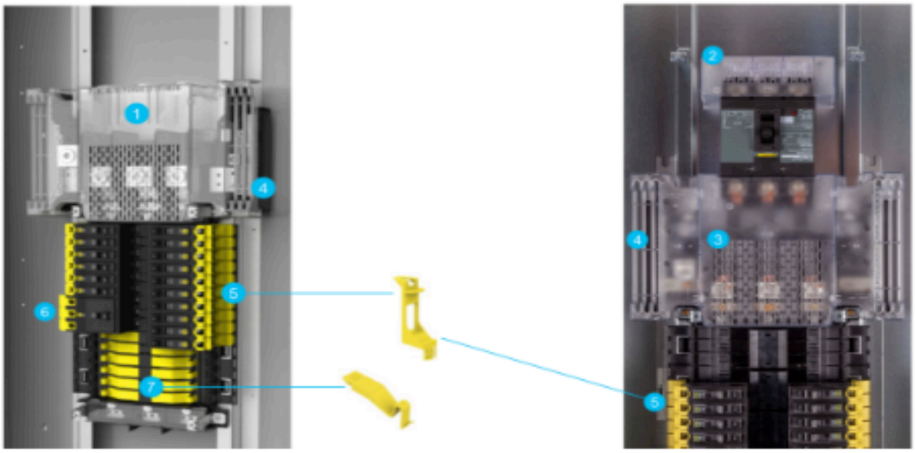

(Bus Finger Covers Empty Spaces) **(Bus Covered Without Branch Circuit Breaker)**

1	Main Lug Cover
2	Main Breaker Line Side Cover
3	Main Breaker Load Side Cover
4	Neutral Cover
5	Low Amp QO(B) Cover
6	High Amp QO(B) Cover
7	Bus Finger Cover

For more information please reference Document Number 1640BR1701.

Separated Distribution and Split Bus Panelboards

Square D™ NQ Separated Distribution and Split Bus Panelboards come Factory Assembled with copper bus, with or without an integral Main Circuit Breaker. For more detailed information about Square D NQ Separated Distribution and Split Bus Panelboards please review document 1600HO1701.

Table 11 - Split Bus and Separated Distribution Panelboards

Interior Type (Mains Rating)	Interior Phases	Interior Spaces (Pole Spaces per Section)	Split Rating (Amps)	
			Cabled Split	Backfed Mains
Split Bus (225 A)	Single Phase	18 - 30	NA	125 A
		30 - 18		
		30 - 30		
	Three Phase	18 - 30		
		30 - 18		
		30 - 30		
		30 - 18 - 18		
Cabled Split (225 A)	Three Phase	30 - 18 - 18	225 A	NA
		18 - 18 - 18		
Cabled Split (400 A)		30 - 18 - 18	400 A	
		18 - 18 - 18		

Branch Circuit Breakers (Bolt-on and Plug-on)

Please reference QO QOB Circuit Breaker Catalog 0730CT9801.

QOB Branch Circuit Breakers

QO Branch Circuit Breakers

Table 12 - Branch Circuit Breakers (Bolt-on or Plug-on)

Circuit Breaker Catalog Prefix	Max. Vac Rating	Number of Poles	Ampere Rating	Interrupting Rating—RMS Symmetrical Amperes[11]		
				Vac		
				120	120/240	240
QO, QOB	120/240	1	10–70	—	10k	—
	120/240	2	10–125	—	10k	—
	120/240	2	150–200[12]	—	10k	—
	240	3	10–100	—	—	10k
QO-H, QOB-H	240	2	15–100	—	—	10k
QO-VH	120/240	1	15–70	—	22k	—
	120/240	2	15–125	—	22k	—
	120/240	2	150–200[12]	—	22k	—
	240	3	15–100	—	—	22k
QOB-VH	120/240	1	15–70	—	22k	—
	120/240	2	15–150	—	22k	—
	240	3	15–150	—	—	22k
QOH	120/240	2	35–125	—	42k	—
QH, QHB	120/240	1	15–30	—	65k	—
	120/240	2	15–30	—	65k	—
	240	3	15–30	—	—	65k

11. Series ratings are also available. See Switchboard/Panelboard Short-Circuit Current Ratings (data bulletin #2700DB9901).
12. 175–200 A 2P breakers available only as plug-on. These require four pole spaces and may only be used in single phase 400 A or 600 A panelboards with three point latch trim fronts.

QO™ Arc-Fault Circuit Breakers

QO arc-fault circuit breakers provide combination arc fault protection with or without ground fault circuit protection as required by the NEC and local code adoption, and comply with UL 1699.

Table 13 - QO Arc-Fault Circuit Breaker Catalog Numbers

Circuit Breaker Type[13]	Ampere Rating	1P 120 Vac 10 kAIR 1 Space Required	1P 120 Vac 22 kAIR 1 Space Required	2P 240 Vac 10 kAIR 2 Space Required	2P 240 Vac 22 kAIR 2 Space Required
		Catalog Number	Catalog Number	Catalog Number	Catalog Number
Combination Arc-Fault Interrupter	15 A	QOB115CAFI	QOB115VCAFI	QOB215CAFI	QOB215VHCAFI
	20 A	QOB120CAFI	QOB120VHCAFI	QOB220CAFI	QOB220VHCAFI
Dual Function: Arc-Fault and Ground Fault	15 A	QOB115DF	QOB115VHDF	Use plug-on QO 2-pole dual function MCBs	
	20 A	QOB120DF	QOB120VHDF		

Table 14 - Branch Circuit Breaker Lug Data

Ampere Rating	Circuit Breaker Type	Wire Size (AWG or kcmil)	
		Aluminum	Copper
10–30	QO, QOB	(2) #14–#8	(2) #14–#8
35–50	QO, QOB	(1) #8–#2	(1) #8–#2
60–70	QO, QOB	(1) #8–#2	(2) #8–#2
80–125	QO, QOB	(1) #4–2/0	(1) #4–2/0
150	QOB-VH	(1) #4–300 kcmil	(1) #4–300 kcmil
175–200	QO, QO-VH	(1) #4–300	(1) #4–300

NOTE:

- Lugs suitable for 75°C wire
- Torque QOB connector mounting screws to 18–21 lb-in
- Torque labels are included on the circuit breakers with load side lug torque requirements

Table 15 - QO Circuit Breaker Wire Binding Screw Torque Summary

Type	Description and AIC Rating	Torque lb.-in (N-m)
QO/QOB	10 A–30 A, 1, 2 and 3–pole, all interruption ratings	36 (4)
QO/QOB	35 A–70 A, 1 and 2–pole and 40 A–60 A 3–pole, 10kA	45 (5)
QO/QOB-VH, QOH	40 A–125 A, 2–pole, 22kA and 42kA	50 (5.6)
QO/QOB-VH	40 A–100 A, 3–pole, 22kA	50 (5.6)
QO/QOB	70 A–100 A, 3–pole, 10kA	50 (5.6)
QO/QOB-H	40 A–100 A, 2–pole, 240 Vac	50 (5.6)
QO/QOB	80 A–125 A, 2–pole, 10kA	50 (5.6)
QOB-VH	110 A–150 A, 3–pole, 22kA	250 (28)
QO/QOB	150 A–200 A, 2–pole, 10kA	250 (28)
QO/QOB-VH	150 A–200 A, 2–pole, 22kA	250 (28)

Recommended torque values may be found on each QO(B) circuit breaker.

13. HACR type for use with air conditioning, heating and refrigeration equipment having motor group combinations and marked for use with HACR type circuit breakers.

Lighting Contactors

Lighting Contactors are available as an option in factory-assembled panelboards. 2-pole and 3-pole contactors are available for 30, 60, 75, 100, 150, 200, or 225 A applications. For more information please review ASCO 920 Lighting Contactors at https://www.ascopower.com/us/en/product-range-presentation/66151-asco-920-lighting-contactors/.

Neutrals

100–225 A Neutral Assembly

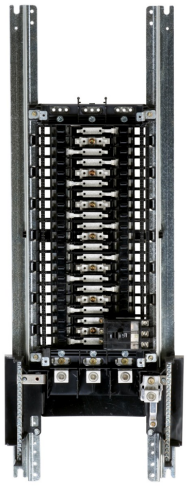

Neutral assemblies are installed onto NQ panelboard interiors, except for some OEM specific commercial references.

- All lugs suitable for copper or aluminum wire.100–600 A Ready-to-install interiors have split neutral located on same end as mains.
- Neutral assemblies on some Factory Assembled Panelboards may be located at opposite end of interior from the mains.
- Bondable for use as service entrance in USA. Panelboards with neutral assemblies and barriers suitable for Canadian service entrance are available factory assembled.
- Branch terminals are suitable for AWG #12–#4 aluminum and #14–#4 copper. 400 A and 600 A neutrals include at least two #14-2/0 terminals.
- Provisions for #14-2/0 and larger branch terminal lugs may be added with use of auxiliary neutral lugs.
- All unused neutral terminals may be used to terminate equipment grounding conductors when panelboard is bonded and used as service entrance.
- 100% rated neutrals. One neutral terminal provided per circuit in panelboard.
- 200% rated neutrals are available as factory-assembled options or as kits.

Typical Neutral Assemblies

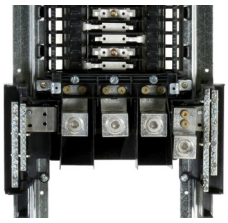

400 A

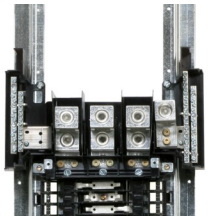

600 A

Table 16 - Field Installable Copper 100% Neutral Kits

Amperes	Catalog Number
100	NQN1CU
225	NQN2CU
400/600[14]	NQN6CU[14]

Table 17 - Field Installable 200% Neutral Kits

Amperes	Catalog Number
100	NQNL1[15]
225	NQNL2, NQNL2ACCY[15]
400	NQNL4[16]

NQNL2: 225 A Copper 200% Neutral Assembly

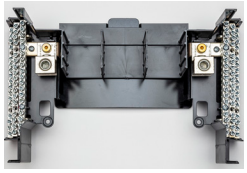

200% Neutral Restrictions

- Compression lugs on 200% neutrals not available with accessories (feed through lugs, sub feed lugs).

225 A, 200% Neutral

- Integral lighting contactors are not available.
- Not available on column width or 14" wide interiors.
- If sub-feed lugs, feed-through lugs, or sub-feed circuit breakers are required, order the following 200% neutral kit: NQNL2ACCY.

400 A, 200% Neutral

- NEMA Type 3R, 5, and 12 enclosures require copper-bussed interiors.
- Integral lighting contactors are not available.
- NQNLEP neutral plate available for 400 A panelboards equipped with 200% neutrals and sub-feed lugs, feed-through lugs, or sub-feed circuit breakers.

600 A, 200% Neutral

- NEMA Type 3R, 5, and 12 enclosures require copper-bussed interiors.

14. Not for use with 600 sub-feed lugs, feed-through lugs, or sub-feed circuit breaker.
15. Use NQNL2ACCY when installing on a 225 A panel with SFL, SFB, or TFL.
16. Not to be used with SFL, FTL, or SFB. These combinations are factory-assembled only.

- Integral lighting contactors are not available.

NQ Condo Riser Neutral Assembly

Condo Riser Neutral Assembly

- available factory installed on 400 A or 600 A interiors.
- provides 36 AWG #14–2/0 and 36 AWG #14-#4 Cu-Al terminal.
- accepts (4) 1/0-750 kcmil line cables and (8) 3/0-750 kcmil load cables
- available for 100% or 200% neutral assemblies.
- requires 26" wide enclosures.
- adds 12 in. (305 mm) to length of main lug only panelboards.

Table 18 - Condo Riser Neutral Assemblies

Commercial Reference	Circuit Count	Number of Terminations		
		#6 AWG-350 kcmil	#14–2/0 AWG	#4–#14 AWG
NQN6CRUS	30 or 42	2	36	36
NFN6CR[17]	54 or 72	–	36	36

Auxiliary Neutral Lugs

Auxiliary Neutral Lugs

Catalog No. QO70AN

Catalog No. Q1150AN

Lugs are suitable for copper or aluminum wire and are field-installable on neutral assembly.

Table 19 - Optional Ground Bar / Neutral Bar Lugs

Catalog Number	Lug Wire Range (AWG - kcmil)	Wire Amperage	Max. Qty. of Add-on Lugs per Neutral[18]	
			100 A / 225 A	400 A / 600 A
QO70AN[19]	#12 to #2 Al or #14 to #4 Cu	70 A	8–20	4–12
NQ100AN[19]	#14 to #2/0 Al or Cu	80–100 A	6–14	4–10
Q1150AN[20]	#1 to #4/0 Al or Cu	110–150 A	6–10	4–6
NQ200AN[19]	(2) #4 to 300 kcmil Al or Cu	175–200 A	–	2

Catalog No. QO100AN

Catalog No. NQ200AN

17. Requires 8.75" deep enclosure.
18. Maximum quantity of add-on lugs depends upon interior circuit count.
19. Requires two standard termination spaces on Neutral or Ground bar.
20. Requires three standard termination spaces on Neutral or Ground bar.

NQ Neutral Assembly with Oversized Lugs

Catalog No.
NQALMN6

Oversized Neutral Lugs

The next larger ampacity neutral assembly may be installed on 100 A, 225 A and 400 A interiors to provide oversized neutral lugs.

- 400 A and 600 A NQ Panelboards may be ordered with factory assembled oversized neutral lug assemblies containing up to four lugs that each accept one 1/0-750 MCM or (2) 1/0-300 MCM Mechanical Lugs, in either Aluminum or Copper.
- 100% and 200% Neutral Assemblies are available in 400 A NQ Panelboards.
- Oversized Neutral Lugs add up to 12" to the enclosure length, and are available for interiors with sub-feed lugs, feed-thru lugs, and sub-feed breakers.

Neutral Bonding Provisions

Bonding strap may be field-installed for UL service equipment requirements on 100–600 A interiors (in Canada, available as factory-assembled only).

100–225 A Provision

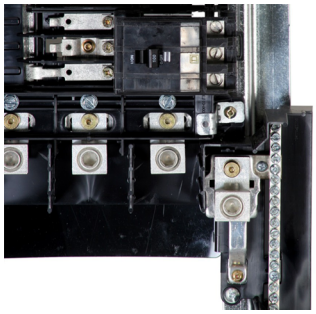

Table 20 - Neutral Bonding Kits

Mains Rating	Neutral Bonding Kit
100 A / 225 A	NQBOND12
400 A / 600 A	NQBOND46
400 / 600 A Condo Riser	NFNQCRBOND46

Ground Bar Kits

Equipment Ground Bar

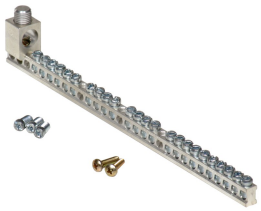

- Field-installable in all panelboards.
- Suitable for copper or aluminum wire.
- Provisions for mounting up to four ground bar kits per panel.

Table 21 - Available Ground Bar Kits

Catalog Number	Terminals			Approximate Overall Length Inches (mm)
	Number of Terminals	Quantity Available for Each Size		
		Material	I/II	
PK12GTA	12	Al	12/0	4.700 (119)
PK18GTA	18	Al	18/0	6.560 (167)
PK23GTA	23	Al	24/0 (#14-1 Cu only)	8.11 (206)
PK27GTA	27	Al	24/1	9.35 (237.5)
PK27GTACU	27	Cu	24/1	9.10 (231.14)

Figure 1 - Distance Between Mounting Holes (for Ground Bar Kits)—In (mm)

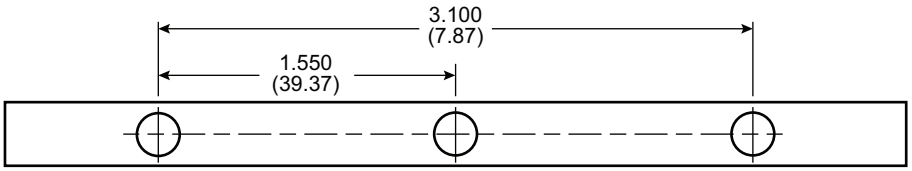

Table 22 - Ground Bar Kit Wire Ranges (AWG)

Size	Cu	Al
I	(1) #14 to #4 or (2) #14 or #12	(1) #12 to #4 or (2) #12 or #10
II	(1) #14 to 1	(1) #6 to 2/0

Ground Bar Insulator Kit (Catalog No. PKGTAB)

The insulator kit is field installable and may be used with equipment ground bar kits. NQ panelboard enclosures have equipment ground bar mounting provisions in all four corners.

Ground Bar with Insulator Kit

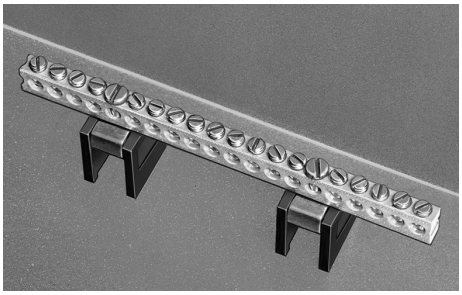

Technical Information

All PK equipment grounding kits are supplied with mounting screws, necessary installation instructions, and an “Equipment Grounding Terminal” self-adhesive label.

NQ 14-inch wide—up to 240 Vac or 48 Vdc

NQ 14 in. interior (without deadfront) with QOB branch circuit breakers (in NQB532 enclosure)

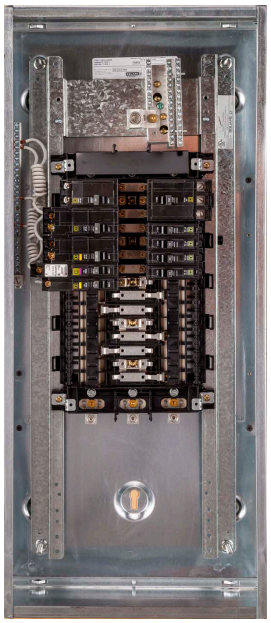

Features

- 240 Vac, 48 Vdc maximum.
- 100 or 225 A rated interior with main circuit breaker or main lugs only.
- Accepts same QO(B) branch circuit breakers as standard NQ interiors, up to 100 A maximum.
- Interiors supplied with tin plated copper bus as standard.
- Three-phase, four-wire, and single-phase, three-wire interiors available.
- Panelboards available with Mono-Flat™ trim front.
- May be suitable for use as service entrance equipment with UL service entrance barrier kit, or when ordered as NQSExxxxxx Canadian load center.
- Branch circuit filler plates provide fast and easy installation.

Table 23 - 14-inch wide Main Circuit Breakers

Main Circuit Breaker Catalog Number	Mains Rating	Voltage System	Main Circuit Breaker
—	100 A	1 phase, 3 wire	2–pole QOB or QOB-VH[21]
—		3 phase, 4 wire	3–pole QOB or QOB-VH[21]
NQMB2HJ14 or NQMB2Q14	225 A	Any	PowerPacT H-, J-, or Q-frame

21. Select a PowerPacT circuit breaker (and associated main circuit breaker kit from the list for 225 interiors), for panels to be “Suitable for use as UL service equipment.”

Surge Protection

NQ Main Circuit Breaker Interior with SurgeLoc™ SPD

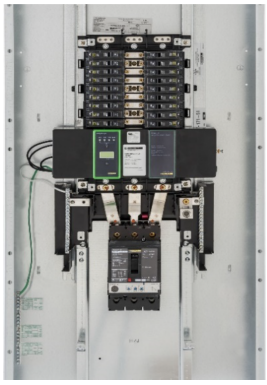

Square D™ brand SurgeLoc™ Surge Protective Device (SPD) delivers specification grade performance for service entrance or critical branch panel applications. The SurgeLoc™ SPD product utilizes a high-energy suppression circuit that provides 6–10 modes of suppression from 80,000 to 240,000 peak Amps of surge current rating per phase.[22] These devices feature circuitry that provides not only transient surge suppression, but also noise filtration.

Table 24 - Surge Protection Ratings

NQ SurgeLoc™ Voltage Specifications	Voltage Protection Rating (VPR)				
Service Voltage	L–N	L–G	N–G	L–L	MCOV[23]
120/240 Vac, 1-phase	700	700	600	1000	150
208Y/120 Vac, 3-phase, 4-wire	700	700	600	1000	150
240/120 Vac, 3-phase, high-leg delta	800	800	700	1200	150

Select a 30 A circuit breaker if a SPD Disconnect is desired (2–pole) breaker for single phase interiors, or 3–pole breaker for three phase interiors.

Design Features

- Individually fused suppression modules.
- Thermal cutout.
- Inline, copper bus bar connection.
- Solid state bi-directional.
- Push-to-Test on-line diagnostic display.
- Audible alarm with enable/disable switch.
- LED indicators indicate loss of protection, or fully-operational circuit.
- High-energy parallel design for IEEE C62.41 category A, B, and C3 applications.
- Available in main circuit breaker and main lug only panelboards with sub-feed circuit breakers, feed-through lugs, or sub-feed lugs.
- AC tracking filter with EMI/RFI filtering up to -30 dB from 100 kHz to 100 MHz.
- Dry Contacts provide remote indication of the SPD device's operating status to a computer interface board or emergency management system.

Table 25 - Surge Protection Options

Option	Description
Surge Counter	Displays the combined total number of transient voltage surges detected from L–G, L–L, L–N, and N–G since the counter was last reset.
Remote Monitor	Displays the alarm status of the surge protective device up to 1,000 ft (305 m) away from the unit. This option uses the dry contacts.

22. Available surge current rating: 80, 100, 120, 160, 200, and 240 kA.
23. MCOV: maximum continuous operating voltage.

Enclosures

Indoor Enclosures

Interior Mounts to Box Studs

MH Box

Front (Type 1) Enclosure for 400–600 A Interiors

Mono-Flat Front (Type 1 Enclosure) for 100–250 A Interiors

Concealed Hinge Used on 100–600 A Trim Fronts

NEMA 1 Enclosure with Vented Hinged Trim Front with 3 Point Latch (required if 175 A or 200 A QO(VH) circuit breakers are installed)

Indoor Enclosure Accessories

Flush Lock (standard) Catalog No.
PK4FL

Sliding Vault Lock (optional) Catalog No.
PK5FL

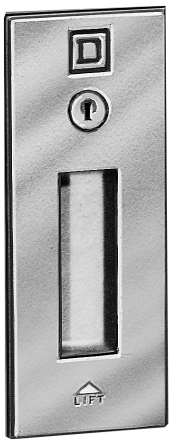

Key NSR-251 Catalog No.
LP9618

Table 26 - Enclosure Types

Type	Environment	Protects Against
Type 1	Indoor	Contact with the enclosed equipment, falling dirt
Type 2	Indoor	Type 1, plus • Dripping and light splashing of non-corrosive liquids
Type 3R	Indoor / Outdoor	Type 2, plus • Rain, snow, and sleet
Type 4	Indoor / Outdoor	Type 3R, plus • Will be undamaged by the external formation of ice on the enclosure • Circulating dust, lint, fiber • Settling airborne dust, lint, fibers • Windblown dust • Hosedown and splashing water
Type 4X	Indoor/outdoor	Type 4, plus • Corrosive agents
Type 5	Indoor	Type 2, plus • Settling airborne dust, lint, fibers, and flyings
Type 12	Indoor	Type 2, plus • Circulating dust, lint, fibers, and flyings • Settling airborne dust, lint, fibers, and flyings • Oil and coolant seepage

Indoor Enclosures (NEMA Types 1 and 2)

Boxes (MH):

- Galvanized steel with removable endwalls, one is provided with knockouts and the other is blank.
- Standard enclosure sizes:
  - 20 in. (508 mm) wide x 5.75 in. (146 mm) deep, 600 A main lug interior max. or 400 A main circuit breaker max.
  - 20 in. (508 mm) wide x 8.75 in. (223 mm) deep, for PowerPacT L main circuit breaker interior.
- Enclosure and interior mounting instructions are found in the information manual shipped with the interior.
- Interiors mount directly to studs in the MH enclosure. Interior mounting brackets are not required.
- Type 2 enclosure includes a driphood.
  - Surface-mounted trim only.

    NOTE: Also available with knockouts / blank endwalls both ends.

NOTE: A wide variety of enclosure widths and height extensions are available for factory assembled panelboards.

Table 27 - NEMA 1 NQ Enclosure Commercial Reference Structure

Standard Width (20”) and Depth (5.75”) NEMA 1 Enclosures
MH 50 BE
BE – Both End Walls blank; **KE** – Knockouts in Both End Walls; Blank – Knockouts in one End Wall, the other is blank (standard) **50** – Nominal Length (inches); 26” minimum 92” maximum **MH** – Enclosure Family (NEMA 1, 2 Covers)
Deep (8.75”) NEMA 1 Enclosures
MH 62 D9
D9 – 8.75” deep; both end walls are blank blank – 5.75” deep **50** – Nominal Length (inches); 26” minimum 92” maximum **MH** – Enclosure Family (NEMA 1, 2 Covers)
Wide Gutter (26” width) NEMA 1 Enclosures (both end walls are blank)
MH 68 D9 L3R3
L3R3 – 3” extension to left & right gutter **L6** – 6” left gutter extension (factory assembled only) **R6** – 6” right gutter extension (factory assembled only) **D9 – 8.75” deep;** both end walls are blank blank – 5.75” deep **68** – Nominal Length (inches); 44” minimum 92” maximum **MH** – Enclosure Family (NEMA 1, 2 Covers)

Trims Fronts (NC):

- Finished with gray baked enamel over cleaned phosphatized steel (ANSI 49).
- Flush or surface mounted (Type 2 surface only).
- Door has flush lock. Uses NSR-251 key.
- Directory card located on the inside of the door.
- Trim fronts for 400–600 A interiors are vented and mount to the enclosure with trim screws. Door hinges are concealed.
- Optional hinged trim fronts are available. These meet most door-in-door specifications.

- NEMA 1 trim fronts may be factory ordered with special features such as outer door locks, padlock hasp, or welded metal directory card holders.

Hinged Trim on Surface Mounted Enclosure

NOTE: Special trim fronts are also available, including: welded metal directory card holders; three point latches; custom paint colors, stainless steel, custom door locks, taller and/or wider trim fronts.

Table 28 - NEMA 1 NQ Trim Front Commercial Reference Structure

Standard Width (20”) and Depth (5.75”) NEMA 1 Enclosures
NC 50 V F 3P HR
HR – Hinged Right; Blank – Mono-Flat (standard) **3P** – three-point latch trim front; Blank – flush mounted lock (standard) **F** – Flush mount; **S** – Surface mount **V** – Vented; (standard for 400 and 600 A interiors) Blank – not vented (standard for 100 and 225 A interiors) **50** – Nominal Length (inches); 26” minimum (62” minimum for hinged 3-point latch) 92” maximum **NC** – Trim Front Family (NEMA 1, 2 Covers)
Wide Gutter (26” width) Trim Fronts
NC 68 V S 3P HR L3R3
L3R3 – 3” extension to left & right gutter **L6** – 6” left gutter extension (factory assembled only) **R6** – 6” right gutter extension (factory assembled only) **HR** – Hinged Right; Blank – Mono-Flat (standard) **3P** – three-point latch trim front; Blank – flush mounted lock (standard) **F** – Flush mount; **S** – Surface mount **V** – Vented; (standard for 400 and 600 A interiors) Blank – not vented (standard for 100 and 225 A interiors) **68** – Nominal Length (inches); 44” minimum (68” minimum for 3-point latch) 92” maximum **NC** – Trim Front Family (NEMA 1, 2 Covers)
NQ 14” Wide Panelboard Trim Fronts
NQC5 32 S
F – Flush mount; **S** – Surface mount **32** – Nominal Length (inches); 26” minimum 56” maximum **NQC** – Trim Front Family (NEMA 1 Covers)

Rainproof (Type 3R) and Dust Resistant (Type 5 and 12) Enclosures

Rain and Dust Resistant Enclosures

New Vented NEMA Type 3R Enclosure

Type 3R, 5, and 12 Enclosure

Vault Handle with Lock Catalog No.
PK4NVL

- Finished with gray baked enamel over cleaned phosphatized galvanized steel (ANSI 49).
- Provisions for two ground bars.
- Directory card holder on inside of door.
- No knockouts.
- Uses NSR-251 key.
- NEMA 3R / 5 / 12 enclosure features:
  - removable drain screw for Type 3R applications.
  - gasketed door has vault handle with lock.
  - 21" wide.
  - 6.5" deep.
- Vented NEMA Type 3R Enclosure features:
  - inner and outer doors have handle with lock.
    - outer door secured with quarter-turn fasteners and screws.
  - 26" wide.
  - 8.75" deep.

Corrosion-Resistant Fiberglass-Reinforced Polyester Enclosures (Type 4X)

Corrosion-Resistant Fiberglass-Reinforced Polyester Enclosure

- Watertight and dust resistant.
- Gasketed door with optional locking handle.
- Directory card holder on inside of door.

Stainless Steel Enclosures (Type 4 and 4X)

Stainless Steel Enclosure

- Watertight and dust resistant.
- Gasketed door with optional locking handle.
- Directory card holder on inside of door.
- Type 304 is standard. Type 316 available.

Single Row (Column-Width) Panelboards

NQ Column Width Panelboard with Cable Trough and Pull Box

Ratings

- Main lugs: 100–225 A
- Main circuit breaker: 100–225 A

Enclosures

- 8.625 in. (219 mm) wide by 5.00 in. (126.95) deep for 10" WF Beams
- Galvanized Steel
- Removable endwalls
- Finish: gray baked enamel over cleaned, phosphatized steel

Miscellaneous

- All lugs are suitable for 75°C copper or aluminum wire
- 60 A maximum branch circuit breaker
- Bolt-on QOB/QOB-VH/QHB circuit breakers
- Solid neutral opposite mains, second neutral in pull box

Table 29 - Branch Circuit Breakers (Bolt-on) 240 Vac

10 k AIR QOB	22 k AIR QOB-VH	65 k AIR QHB
1 pole, 10–60 A	1 pole, 10–60 A	1 pole, 10–30 A
2 pole, 10–60 A	2 pole, 10–60 A	2 pole, 10–30 A
3 pole, 10–60 A	3 pole, 10–60 A	3 pole, 10–30 A

Cable Trough

- Stackable
- 8.625 in. (219 mm) wide by 5.00 in. (127 mm) deep for 10" WF Beams
- Galvanized steel trough uses enclosure end wall
- Two-piece front trim
  - 15 in. (381 mm) long top piece of front trim removable for pull box mounting
- Finish: gray baked enamel over cleaned, phosphatized steel
- Cable troughs are standard with a trough barrier

Table 30 - Cable Troughs

Length of Cable Trough	Catalog Number
36 inch (9914 mm)	MTX836
48 inch (1219 mm)	MTX848
56 inch (1422 mm)	MTX856
66 inch (1676 mm)	MTX866

Pull Box

- Mounts on cable trough
- 20 in. (508 mm) wide by 5.75 in. (146 mm) deep by 15 in. (381 mm) high
- Finish: gray-baked enamel over cleaned, phosphatized steel
- Removable end walls with knockouts
- Solid neutral included with 42 circuits
- Pull Box catalog number MPX81542

Power and Energy Management Options

NQ 100 A Branch Mounted Main Circuit Breaker Interior with EM3555 Circuit Monitor and SurgeLoc™ SPD Module

Several Power Meters and Circuit Monitors are available factory-assembled in NQ panelboards. Basic Energy Metering at the Mains is possible with PowerLogic EM3500 series circuit monitors. Power Quality Monitoring is available with the selection of PM5563 or PM8244 power meters. These are typically installed with an LCD display in a 7 inch (178 mm) wide side gutter. Communications from these meters is avaiable via Ethernet Modbus TCP/IP.

Measurement and Verification Panels may be created through the selection of PowerLogic BCPM branch circuit power metering in factory assembly NQ panelboards. CT strips work with communication modules to enable power monitoring of every branch circuit in an NQ panelboard.

Measurement and Verification Panels (MVP Panelboards) may be created through the selection of PowerLogic BCPM branch circuit power metering in factory assembled NQ panelboards. CT strips work with communication modules to enable power monitoring of every branch circuit in an NQ panelboard. More information about NQ MVP Panelboards may be found in Document Number 1200BR1201.

Typical Wiring Diagrams

1-Phase, 3-Wire

100–225 A Main Lugs

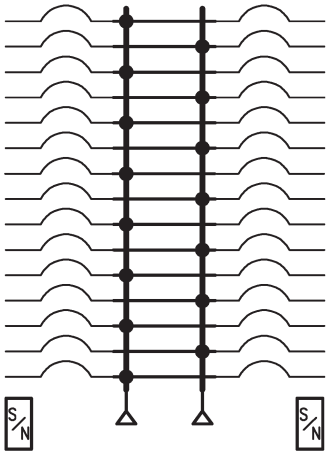

150 A Max. Branch Mounted Main Circuit Breaker

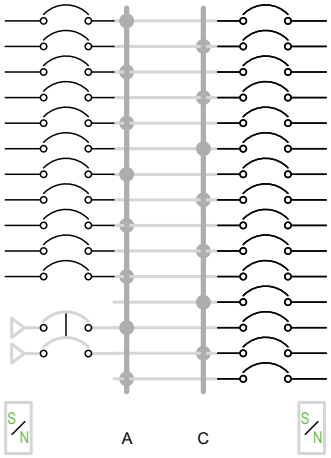

15–225 A Main Circuit Breaker Types H-, J-, or Q-Frame

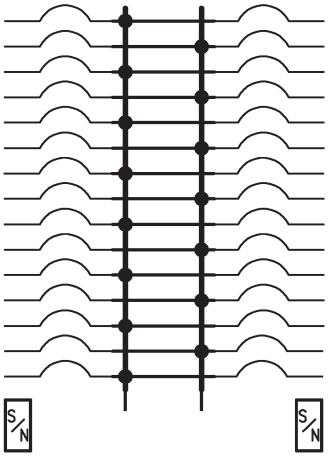

400–600 A Main Lugs

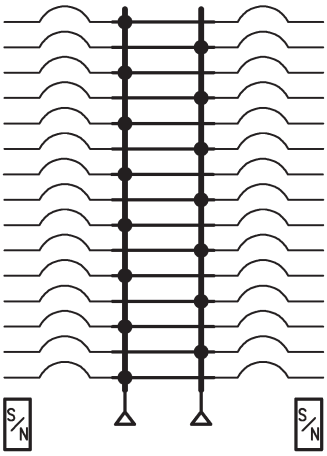

400 A Max. Main Circuit Breaker Type LA/ LH Frame

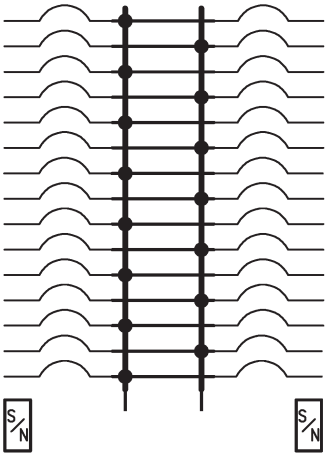

3-Phase, 4-Wire

100–225 A Main Lugs

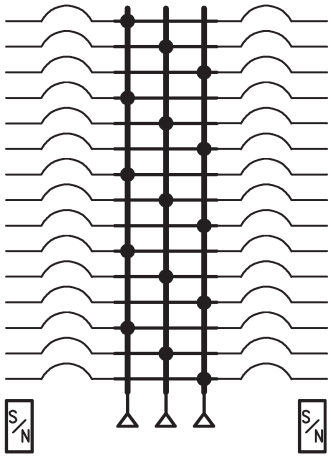

150 A Max. Branch Mounted Main Circuit Breaker

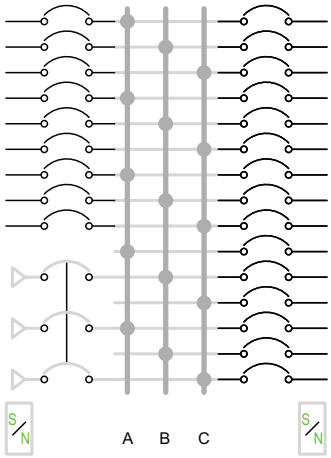

15–225 A Main Circuit Breaker Types H-, J-, or Q-Frame

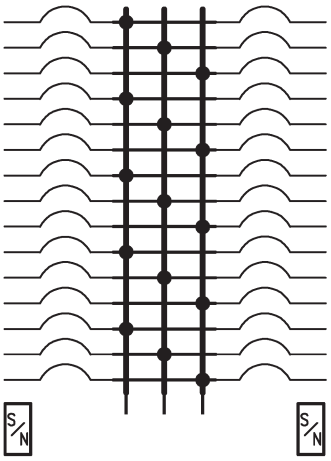

400–600 A Main Lugs

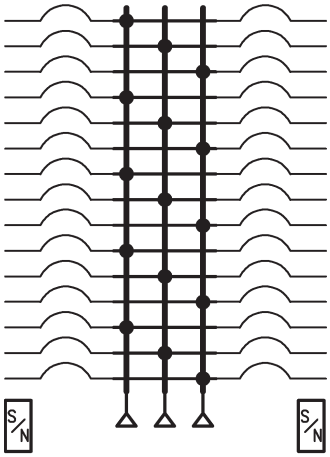

400 A Max. Main Circuit Breaker Type LA/LH Frame

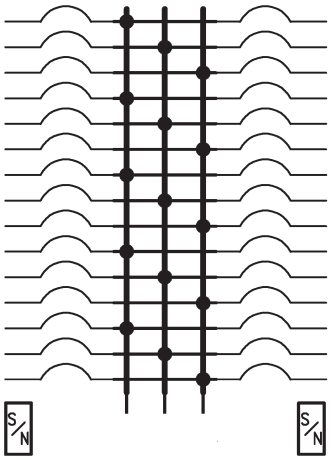
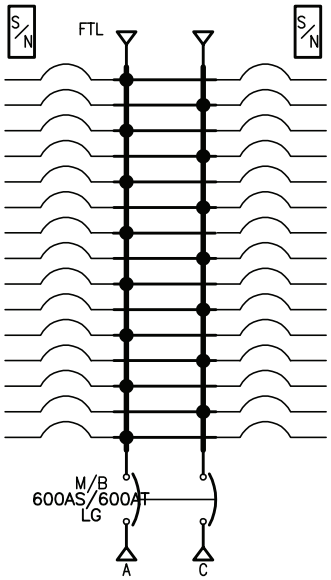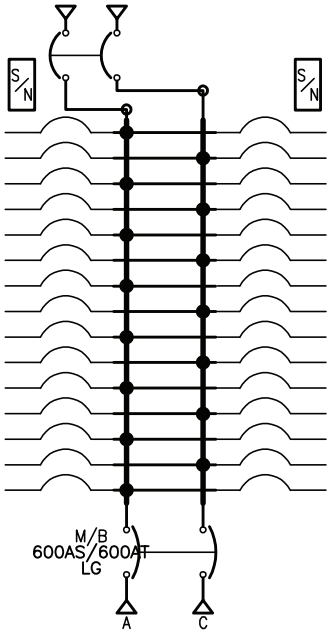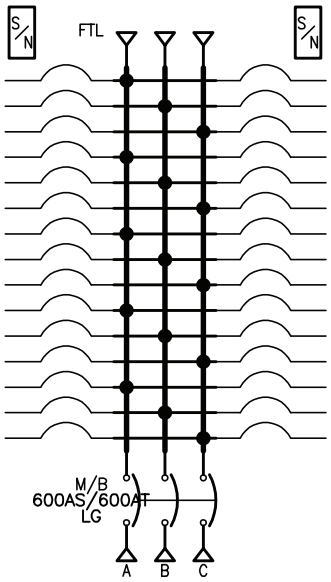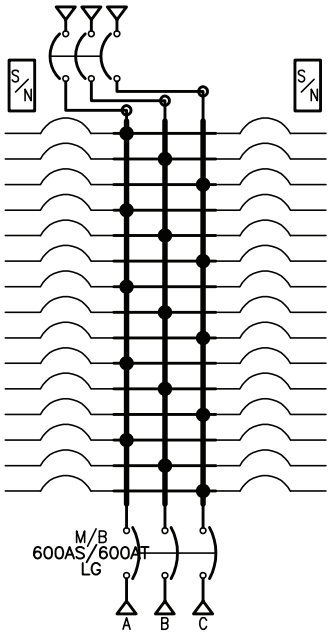
400 or 600 A NQ with PowerPacT L-Frame Main Breaker and Load End Option—Note Position of Neutral