Model: CSP-A390-VG

Inline Cabinet Fan

Standard Construction Features:

- Corrosion resistant galvanized steel scroll and housing - Sound absorbing insulation - Rectangular inlet and outlet duct collar - Outlet with integral spring loaded back draft damper - Double inlet forward curved wheel - Plug type disconnect - Adjustable mounting brackets - Field rotatable discharge

Selected Options & Accessories:

Motor - Vari-Green EC motor 0-10 VDC Input Signal
Wiring Harness, Shipped Loose (PN: 385822)
UL/cUL 507 Listed - Electric Fan
Wall Louvered Discharge, (PN: WL-18X6) Shipped Loose
1 Function Switch, Single Pole Rocker (PN: 872243), Shipped Loose
Isolation Kit, (PN: VI KIT-SP/CSP), Shipped Loose
Adjustable easy installation mounting bracket
Energy Star Certified
Aluminum Wheel Material

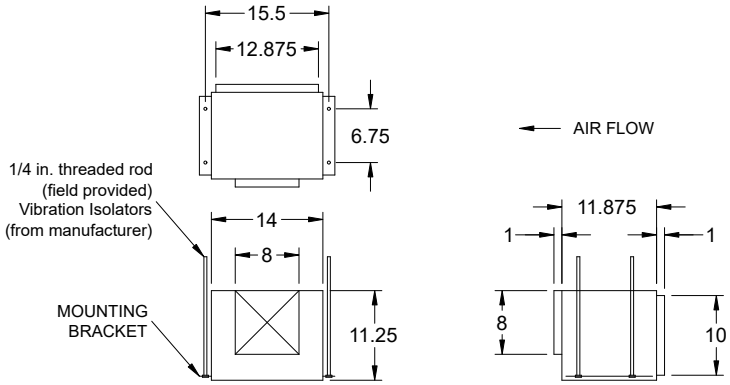

Dimensional	
Quantity	1
Weight w/o Acc's (lb)	24
Weight w/ Acc's (lb)	32

Performance	
Requested Volume (CFM)	200
Actual Volume (CFM)	200
Total External SP (in. wg)	0.5
Fan RPM	1170
* FLA (A)	0.9
Elevation (ft)	62
Airstream Temp.(F)	0
Air Density (lb/ft3)	0.086
Sones	1.3

Motor	
Motor Mounted	Yes
** FEP Input Power (kW)	0.04
Voltage/Cycle/Phase	230/60/1
Enclosure	TEAO
Control Input Voltage	6.4

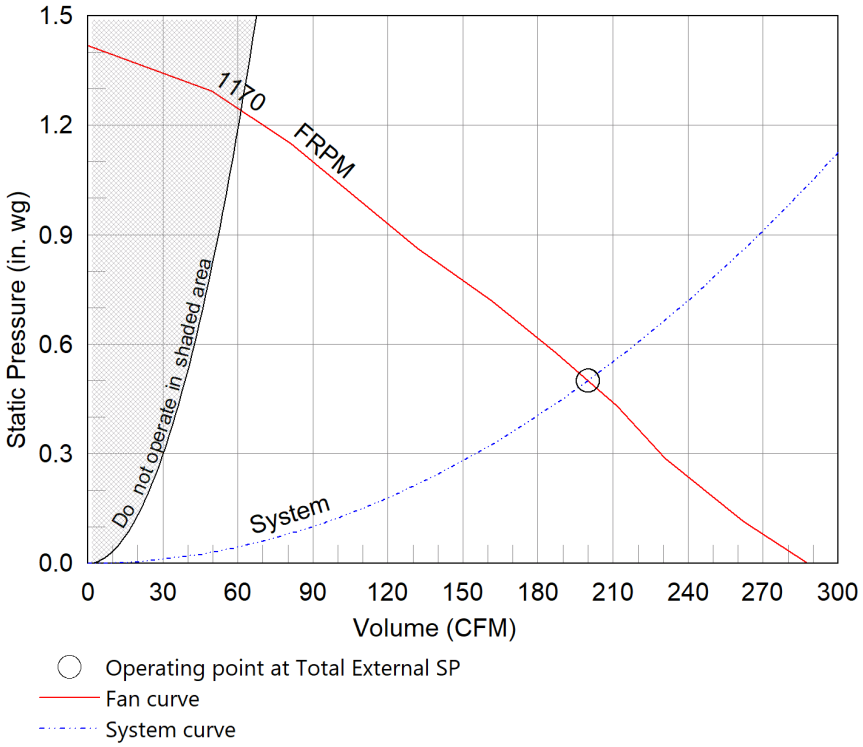

Notes:

All dimensions shown are in units of in.
*FLA is approximate and will vary slightly with the motor.
Sones - calculated using AMCA 301 at 5 ft
** Wattage is approximate and may vary between motors.

CSP-A390-VG Min/Max Fan Curve

Performance

Requested Volume (CFM)	Actual Volume (CFM)	Total External SP (in. wg)	Fan RPM	Operating Power (hp)
200	200	0.5	1170	0.06

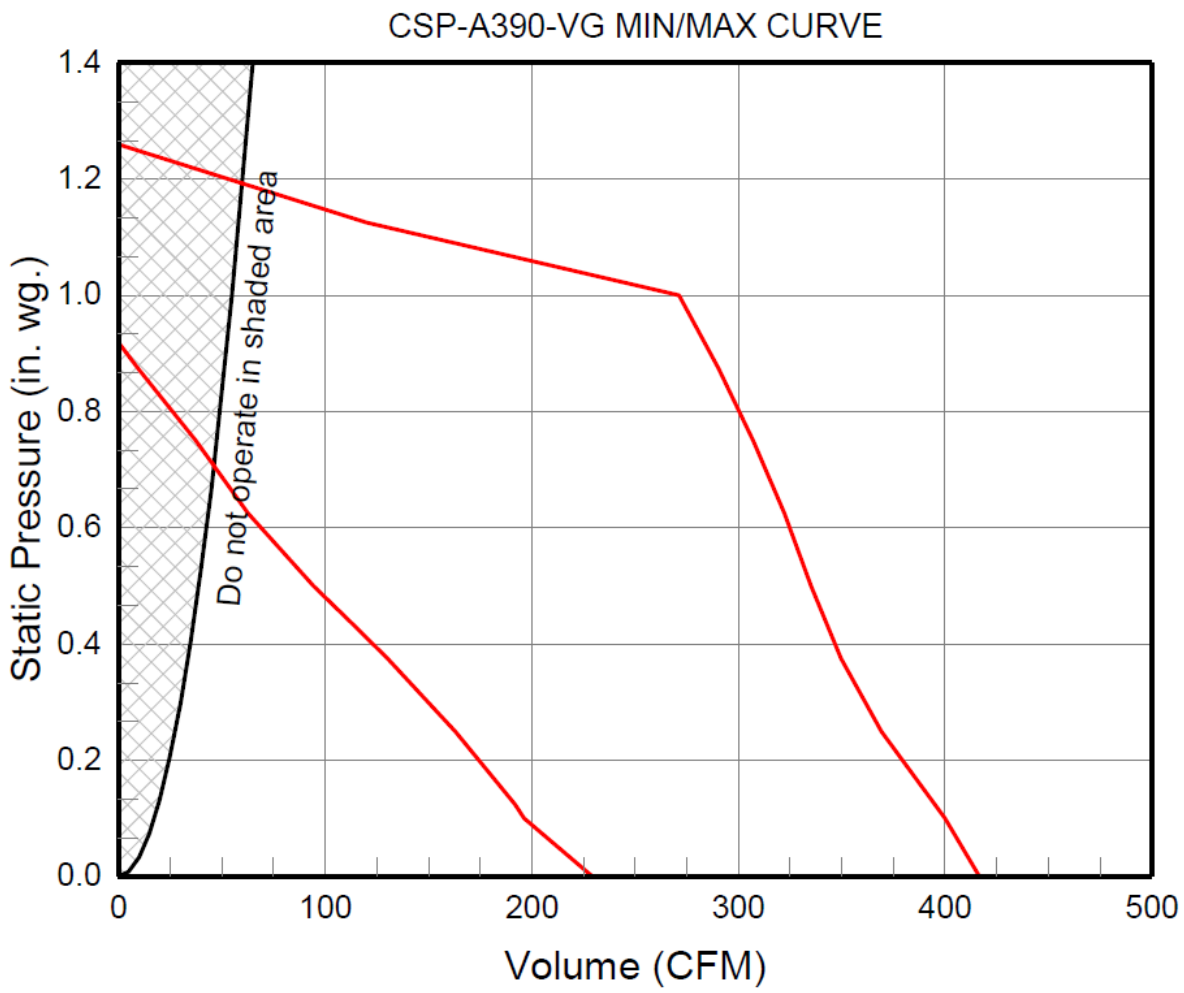

AMCA

AMCA Licensed for Air Performance. Power rating (BHP/kW) does not include transmission losses.

Greenheck Fan Corporation certifies that the model shown herein is licensed to bear the AMCA Seal. The ratings shown are based on tests and procedures performed in accordance with AMCA Publication 211 and comply with the requirements of the AMCA Certified Ratings Program. The AMCA Certified Ratings seal applies to air performance ratings only. Performance certified is for installation type D: Ducted inlet, Ducted outlet. Performance ratings include the effects of a backdraft damper. Speed (RPM) shown is nominal. Performance is based on actual speed of test. The sound ratings shown are for loudness values in spherical sones at 5 ft. (1.5m) in a spherical free field calculated per Annex B of AMCA 311. Values shown are for installation type D: ducted inlet spherical sone levels. Ratings do not include the effects of duct end correction. Ratings are based on 10 ft. of insulated duct.