fantech®
a systemair company

FGR 12 Filter Cassette

Item number: **#44686**

Filter Cassette with MERV5 Panel Filter

- Galvanized Sheet Steel
- MERV5 Filter (FGR8, FGR10 and FGR12 models)
- MERV10 Filter (FGR12HV, FGR 14HV models)
- Toggle Locks
- Rubber-Sealed Connections

Find more details in our online catalogue

Technical parameters

Filter		
Filter class	MERV5	
Dimensions and weights		
Weight	8.5	lb

Dimensions

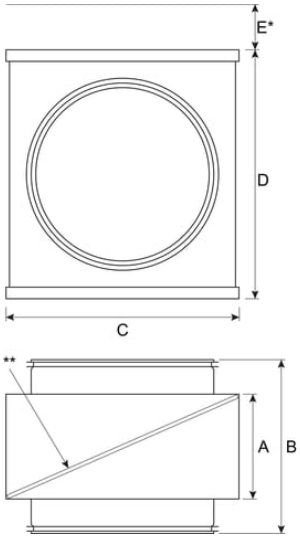

Model	ø	A	B	C
FGR 8	7 7/8 (200)	4 27/32 (123)	7 27/32 (199)	11 57/64 (302)
FGR 10	9 27/32 (250)	4 27/32 (123)	9 13/32 (239)	11 57/64 (302)
FGR 12	12 13/32 (315)	4 27/32 (123)	9 13/32 (239)	13 57/64 (353)

Dimensions are in inches. (mm)

* Free area

AHU Acceessories

FGR 12 Filter Pack (56061)