Submittal

Project Name:

10199 Alburg Springs LAN Room (Revision 1)

Contractor:

Engineer:

Architect:

Rep/Distributor:

Project Detail:

Customer:

Address:

City:

State:

Zip:

Submittal Date:

10/28/2025

Submitted By:

Name:

Company:

Email:

Phone:

Submittal Stage: Design Only

Submittal Documents

PCA-AK24NL & PUZ-AH24NL
21,800 BTU/H CEILING-SUSPENDED INDOOR UNIT
21,800 BTU/H HEAT PUMP OUTDOOR UNIT

Job Name:	
System Reference:	Date:

Indoor Unit.....PCA-AK24NL

Outdoor Unit.....PUZ-AH24NL

INDOOR UNIT FEATURES
- Auto fan speed mode: Automatic adjustment of fan speed
- Easy-to-clean, washable filter
- Filter status indicator
- Ideal PCA Spaces: Ideal for larger retail stores, classrooms, and restaurants
- Knock-out for outside-air intake
- Light commercial: Units with this icon are suitable for light commercial applications such as small offices, restaurants, and retail.
- Multi-Airflow settings: Airflow settings for high and low ceiling applications
- Multiple control options, including the comfort app for remote access, third-party interfaces, and both wired and wireless controllers
- Suspends from ceiling for quick and easy installation
- Up and down swing-mode: An indoor unit with this capability can move air up and down throughout the room like an oscillating fan using the horizontal vanes.

OUTDOOR UNIT FEATURES
- Blue Fin Coating: An anti-corrosion treatment applied to the aluminum fins of the heat exchanger of the outdoor unit to protect against corrosion caused by salt, sulfur, and other airborne contaminants, especially in coastal and industrial areas.
- Continuous operation: 24-hour continuous operation (cooling mode)
- Fast restart
- High pressure protection
- High pressure/temperature protection
- INVERTER-driven compressor: An inverter-driven compressor generates the precise capacity needed to maintain a temperature set point.
- Low ambient cooling : Low ambient cooling down to 0°F providing 100% capacity
- Pre-charged refrigerant: 12k -30k BTU/h come pre-charged for ease of installation. 24k – 30k BTU/h are pre-charged to maximum line length of 225 feet. 12k – 18k BTU/h are pre-charged for up to 165 feet of line length. For units with a capacity of 36,000 BTU/h and above, additional refrigerant charges will be required.
- Seacoast protection: Seacoast Protection, made standard in the 2022 production, features a robust anti-corrosion system with phosphate and acrylic-enamel coated external panels, epoxy resin-coated fan motor support and separator assembly valve beds, and Blue Fin treatment for the heat exchanger coil. These components are rated for 2,000 hours of durability under ASTM B117 testing standards, ensuring longevity in corrosive coastal environments.
- Superior energy and operational efficiency

© 2025 Mitsubishi Electric Trane HVAC US LLC. All rights reserved.

SPECIFICATIONS: PCA-AK24NL & PUZ-AH24NL

Cooling at 95F[1]	Maximum Capacity	Btu/h	24,000
	Rated Capacity	Btu/h	21,800
	Minimum Capacity	Btu/h	9,800
	Maximum Power Input	W	2,120
	Rated Power Input	W	1,810
	Moisture Removal	Pints/h	4
	Sensible Heat Factor	-	0.8
	Power Factor [208V / 230V]	%	95 / 95
Heating at 47F[2]	Maximum Capacity	Btu/h	30,800
	Rated Capacity	Btu/h	28,000
	Minimum Capacity	Btu/h	8,300
	Maximum Power Input	W	2,760
	Rated Power Input	W	2,413
	Power Factor [208V / 230V]	%	96 / 96
Heating at 17F[3]	Maximum Capacity	Btu/h	15,300
	Rated Capacity	Btu/h	15,300
	Maximum Power Input	W	1,610
	Rated Power Input	W	1,610
Heating at 5F[4]	Maximum Capacity	Btu/h	11,600
	Maximum Power Input	W	1,660
Heating at -4F[5]	Maximum Capacity	Btu/h	10,400
Efficiency	SEER2		20.2
	EER2[1]		12
	HSPF2 [IV]		9.3
	COP at 47°F[2]		3.4
	COP at 17°F at Maximum Capacity[3]		2.7
	COP at 5°F at Maximum Capacity[4]		2
	COP at -4°F at Maximum Capacity[5]		1.92
	ENERGY STAR® Certified		Yes
Electrical	Voltage, Phase, Frequency	V AC / V AC, ø, Hz	208 / 230, 1, 60
	Guaranteed Voltage Range	V AC	198 - 253
	Voltage: Indoor - Outdoor, S1-S2	V AC	208/230
	Voltage: Indoor - Outdoor, S2-S3	V DC	12-24
	Short-circuit Current Rating [SCCR]	kA	5
	Recommended Fuse/Breaker Size (Outdoor)	A	25
	Recommended Wire Size [Indoor - Outdoor]	AWG	14
Indoor Unit	Fan Motor Output	W	95
	Airflow Rate at Cooling, Dry	CFM	495, 530, 565, 635
	Airflow Rate at Cooling, Wet	CFM	530, 565, 600, 670
	Airflow Rate at Heating, Dry	CFM	495, 530, 565, 635
	Sound Pressure Level [Cooling]	dB (A)	33, 35, 37, 40
	Sound Pressure Level [Heating]	dB (A)	33, 35, 37, 40
	External Finish Color		6.4Y 8.9/0.4
	Unit Dimensions (W x D x H)	inch x inch x inch [mm x mm x mm]	50-3/8 x 26-3/4 x 9-1/16 [1,280 x 680 x 230]
	Package Dimensions (W x D x H)	inch x inch x inch [mm x mm x mm]	53-3/16 x 29-15/16 x 12-5/8 [1,350 x 760 x 320]
	Unit Weight	lbs [kg]	71 [32]
	Package Weight	lbs [kg]	82 [37]
	Fan Motor Type		DC Motor
IDU Operating Temp. Range	Cooling Intake Air Temp [Maximum / Minimum]	°FDB, °FWB / °FDB, °FWB	90, 73 / 66, 59
	Heating Intake Air Temp [Maximum / Minimum]	°FDB	82 / 50

NOTES
[1]Cooling at 95°F (Indoor: 80°F DB, 67°F WB // Outdoor: 95°F DB, 75°F WB)
[2]Heating at 47°F (Indoor: 70°F DB, 60°F WB // Outdoor: 47°F DB, 43°F WB)
[3]Heating at 17°F (Indoor: 70°F DB, 60°F WB // Outdoor: 17°F DB, 15°F WB)
[4]Heating at 5°F (Indoor: 70°F DB, 60°F WB // Outdoor: 5°F DB, 4°F WB)
[5]Heating at -4°F (Indoor: 70°F DB, 60°F WB // Outdoor: -4°F DB, -5°F WB)
*Indoor/Outdoor Unit Operating Temperature Range (Cooling Air Temp [Maximum / Minimum]):
• Wind baffles required to operate below 23°F DB in cooling mode.
• Heat pump system with wind baffle: 0°F - 115°F.
• Refer to wind baffle documentation for further information.
** Outdoor Unit Operating Temperature Range (Cooling Thermal Lock-out / Re-start Temperatures; Heating Thermal Lock-out / Re-start Temperatures):
• System cuts out in heating mode and automatically restarts at these temperatures.

© 2025 Mitsubishi Electric Trane HVAC US LLC. All rights reserved.

SPECIFICATIONS: PCA-AK24NL & PUZ-AH24NL

Outdoor Unit	MCA	A	22
	MOCP	A	37
	Fan Motor Output	W	74
	Airflow Rate Cooling	CFM	1,940
	Airflow Rate Heating	CFM	1,940
	Defrost Method		Reverse Cycle
	Coating on Heat Exchanger (Bluefin, Sea Coast)		Yes, Yes
	Sound Pressure Level, Cooling[1]	dB (A)	49
	Sound Pressure Level, Heating[2]	dB (A)	52
	Compressor Type		Twin Rotary
	Compressor Model		SRB172FQHMC-L1
	Compressor Oil [Type // Charge]	Type // oz	RM68EH // 23
	External Finish Color		Munsell 3Y 7.8/1.1
	Base Pan Heater		Optional
	Unit Dimensions (W x D x H)	inch x inch x inch [mm x mm x mm]	37-13/32 x 14 x 37-1/8 [950 x 355 x 943]
	Package Dimensions (W x D x H)	inch x inch x inch [mm x mm x mm]	41-15/16 x 17-3/4 x 42-1/2 [1,065 x 450 x 1,079]
	Unit Weight	lbs [kg]	155 [70]
	Package Weight	lbs [kg]	179 [81]
ODU Operating Temp. Range	Cooling Intake Air Temp [Maximum / Minimum*]	°FDB	115 / 23
	Heating Intake Air Temp [Maximum / Minimum]	°FDB, °FWB / °FDB, °FWB	70, 59 / -4, -4
	Heating Thermal Lock-out / Re-start Temperatures**	°FDB	-13 / -4
Refrigerant	Type		R454B
	Pre-Charged Refrigerant Amount	lbs, oz	7, 11
	Maximum Pre-Charged Piping Length	ft [m]	165 [50]
	Additional Refrigerant Charge Per Additional Piping Length	oz/ft	0
Piping	Gas Pipe Size O.D. [Flared]	inch [mm]	5/8 [15.88]
	Liquid Pipe Size O.D. [Flared]	inch [mm]	3/8 [9.52]
	Maximum Piping Length	ft [m]	165 [50]
	Maximum Height Difference	ft [m]	100 [30]
	Maximum Number of Bends		15

NOTES
[1]Cooling at 95°F (Indoor: 80°F DB, 67°F WB // Outdoor: 95°F DB, 75°F WB)
[2]Heating at 47°F (Indoor: 70°F DB, 60°F WB // Outdoor: 47°F DB, 43°F WB)
[3]Heating at 17°F (Indoor: 70°F DB, 60°F WB // Outdoor: 17°F DB, 15°F WB)
[4]Heating at 5°F (Indoor: 70°F DB, 60°F WB // Outdoor: 5°F DB, 4°F WB)
[5]Heating at -4°F (Indoor: 70°F DB, 60°F WB // Outdoor: -4°F DB, -5°F WB)
*Indoor/Outdoor Unit Operating Temperature Range (Cooling Air Temp [Maximum / Minimum]):
• Wind baffles required to operate below 23°F DB in cooling mode.
• Heat pump system with wind baffle: 0°F - 115°F.
• Refer to wind baffle documentation for further information.
** Outdoor Unit Operating Temperature Range (Cooling Thermal Lock-out / Re-start Temperatures; Heating Thermal Lock-out / Re-start Temperatures):
• System cuts out in heating mode and automatically restarts at these temperatures.

© 2025 Mitsubishi Electric Trane HVAC US LLC. All rights reserved.

INDOOR UNIT ACCESSORIES: PCA-AK24NL

Control Interface	Airzone Wired Blueface Controller Black	AZZBSBLUEZEROCN
	Airzone Wired Blueface Controller White	AZZBSBLUEZEROCB
	Airzone Wireless Lite Controller Black	AZZBSLITERN
	Airzone Wireless Lite Controller White	AZZBSLITERB
	Airzone Wireless Think Controller Black	AZZBSTHINKRN
	Airzone Wireless Think Controller White	AZZBSTHINKRB
	IT Extender for kumo station	PAC-WHS01IE-E
	kumo station for the Comfort app	PAC-WHS01HC-E
	Operation and Error Status Output Adapter [1]	PAC-SF40RM-E
	Procon BACnet and Modbus Interface	PAC-UKPRC001-CN-1
	Thermostat Interface for 3rd Party Thermostats	PAC-US445CN-1
	Wireless Interface Adapter for the Comfort app	PAC-USWHS002-WF-2
Condensate	Blue Diamond Advanced Mini Condensate Pump w Reservoir Sensor 208230V recommended	X87-721
	Blue Diamond MaxiBlue Advanced Mini Condensate Pump w Reservoir Sensor 110V up to 48000 BTUH recommended	X87-711
	Blue Diamond MegaBlue Advanced Condensate Pump w Reservoir Sensor	X87-835
	Blue Diamond Sensor Extension Cable 15 Ft	C13-103
	Refco Condensate Pump 100-240 VAC up to 120000 BTUH	COMBI
Wired Remote Controller	Deluxe Wired MA Remote Controller [1]	PAR-42MAAUB
	Simple Direct Wired Remote Controller	PAC-SDW01RC-1
	Simple MA Remote Controller [1]	PAC-YT53CRAU-J
	Touch MA Wired Remote Controller [1]	PAR-CT01MAU-SB
Lineset	10 x 3/8 x 10 x 5/8 Lineset Twin-Tube Insulation	MPLS385812T-10
	100 x 3/8 x 100 x 5/8 Lineset Twin-Tube Insulation	MPLS385812T-100
	15 x 3/8 x 15 x 5/8 Lineset Twin-Tube Insulation	MPLS385812T-15
	30 x 3/8 x 30 x 5/8 Lineset Twin-Tube Insulation	MPLS385812T-30
	50 x 3/8 x 50 x 5/8 Lineset Twin-Tube Insulation	MPLS385812T-50
	65 x 3/8 x 65 x 5/8 Lineset Twin-Tube Insulation	MPLS385812T-65
Power Supplies & Auxiliary Components	3-Pin Wiring Harness	PAC-715AD
	5-Pin Wiring Harness	PAC-725AD
Wireless Remote Controller	Lockdown Bracket for Wireless Handheld Remote Controllers	RCMKP1CB
	RedLINK Wireless Remote Controller	MHK2
	Universal Wireless MA Handheld Remote Controller	PAR-FL32MA-E
	Universal Wireless Receiver for PAR-FL32MA-E	PAR-FA32MA-W
	Wireless Handheld Controller kit with Receiver and i-See Sensor for Ceiling Suspended Models	PAR-SA92MW-E
	Wireless Handheld Controller kit with Receiver for PCA models	PAR-SL93B-E
Disconnect Switch	30A600VUL fits 2 X 4 utility box - Black	TAZ-MS303
	30A600VUL fits 2 X 4 utility box - White	TAZ-MS303W
Remote Sensor	Flush Mount Remote Temperature Sensor for SEZ SLZ SVZ and all P-Series models	PAC-USSEN002-FM-1
	Wall Mount Remote Temperature Sensor	PAC-SE41TS-E
	Wireless temperature and humidity sensor for the Comfort app	PAC-USWHS003-TH-1
Power Supplies and Auxiliary Components	Backup Heat Relay Kit Adapter for CN24 or CN152 Connector	CN24RELAY-KIT-CM3
Filter	65 Medium Efficiency Filter MERV 8	PAC-SH89KF-E

NOTES
[1]Unable to use with Wireless Remote Controller

© 2025 Mitsubishi Electric Trane HVAC US LLC. All rights reserved.

OUTDOOR UNIT ACCESSORIES: PUZ-AH24NL

Mini-Split Wire	14 Gauge 4 wire Armored MiniSplit Cable250 ft roll	SW144-250
	14 Gauge 4 wire Armored MiniSplit Cable50 ft roll	SW144-50
	14 Gauge 4 wire MiniSplit Cable250 ft roll	S144-250
	14 Gauge 4 wire MiniSplit Cable50 ft roll	S144-50
Stand	18 Single Fan Stand	QSMS1801M
	24 Single Fan Stand	QSMS2401M
	Condenser Wall Bracket	QSWB2000M-1
	Condenser Wall Bracket - Stainless Steel Finish	QSWBSS
	Outdoor Unit 3-14 inch Mounting Base Pair - Plastic	DSD-400P
	Outdoor Unit Stand 12 High	QSMS1201M
Power Supplies & Auxiliary Components	3-Pin Wiring Harness	PAC-715AD
	5-Pin Wiring Harness	PAC-725AD
Wind Baffle	Front Wind Baffle	WB-PA5
	Rear Wind Baffle	WB-RE5
	Side Advanced Wind Baffle	WB-SD5
M-NET Converter	M-Net Interface for P-Series	PAC-SJ95MA-E
Air Outlet Guide	Air Outlet Guide 1 Piece	PAC-SG59SG-E
Mounting Pad	Condensing Unit Mounting Pad 24 x 42 x 3	ULTRILITE2
Hail Guards	Hail Guard	HG-A6
Drain Socket	Drain Socket	PAC-SG61DS-E
Control/Service Tool	ControlService Tool	PAC-SK52ST
	M- & P-Series Maintenance Tool Cable Set	M21EC0397
Optional Defrost Heater	Optional Defrost Heater	PAC-SK62BH-E
Centralized Drain Pan	Centralized Drain Pan	PAC-SG64DP-E
Snow/Rain Diverter	SnowRain Diverter	SRD-4
NOTES		

© 2025 Mitsubishi Electric Trane HVAC US LLC. All rights reserved.

INDOOR UNIT DIMENSIONS: PCA-AK24NL

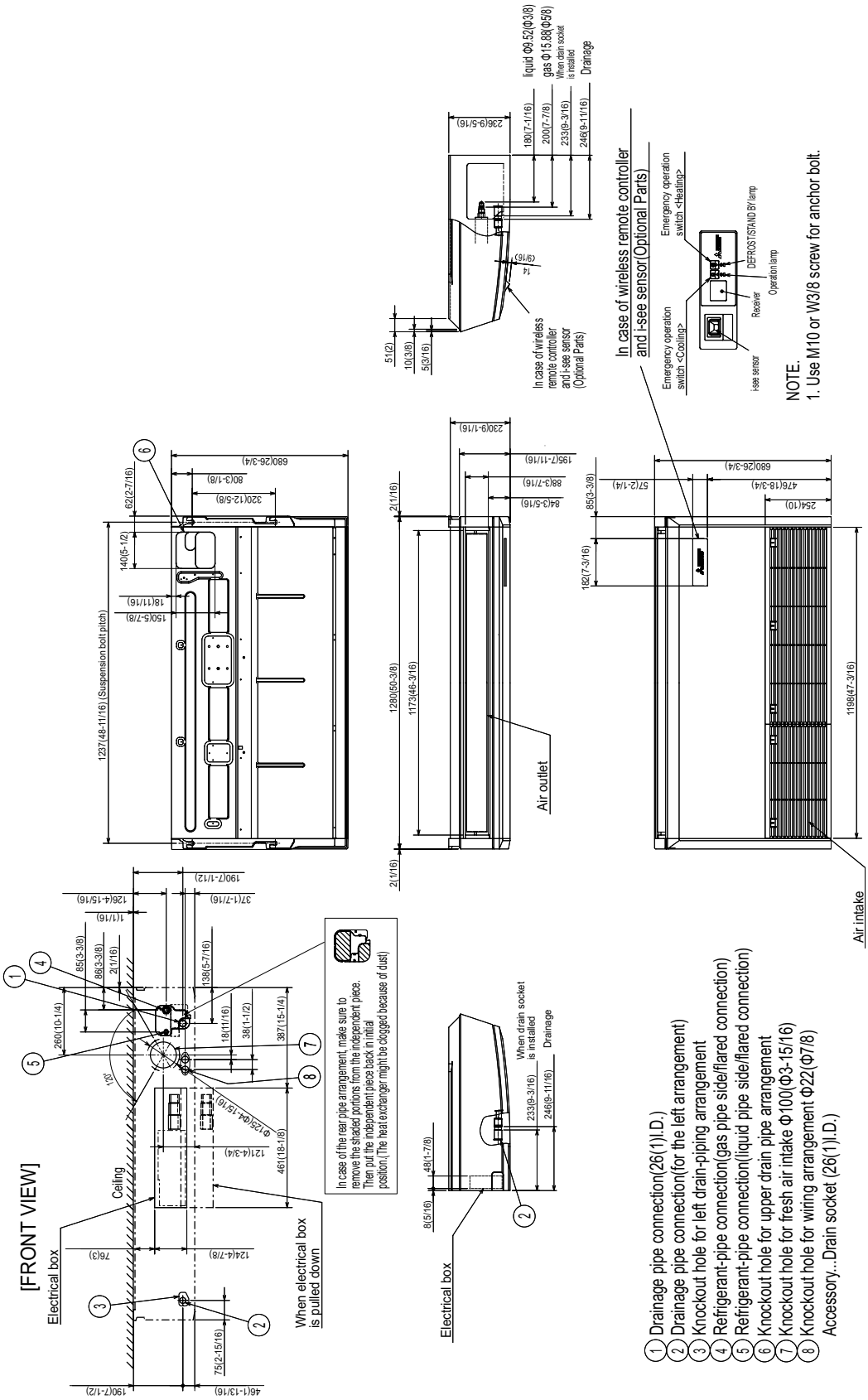

© 2025 Mitsubishi Electric Trane HVAC US LLC. All rights reserved.

OUTDOOR UNIT DIMENSIONS: PUZ-AH24NL

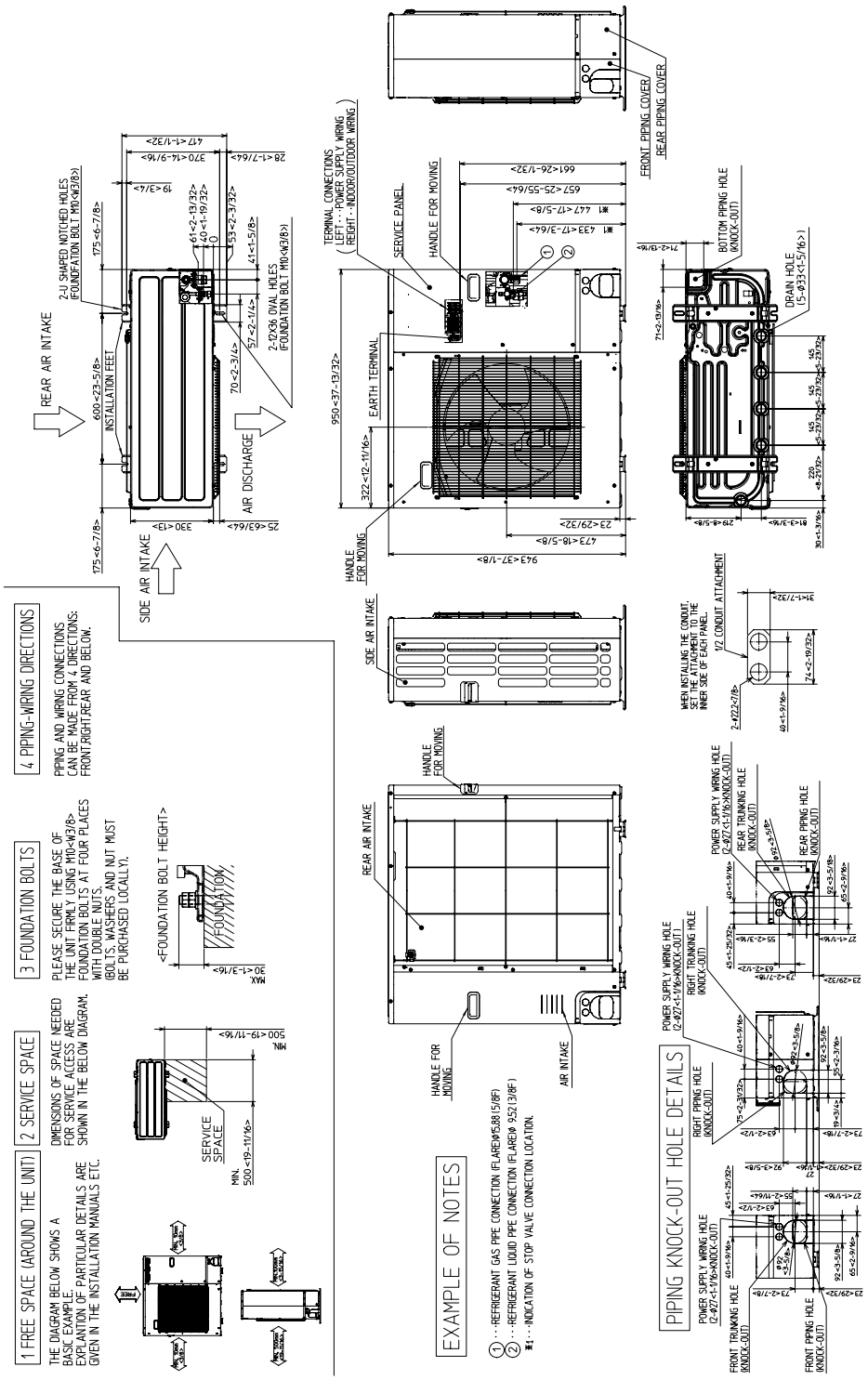

1340 Satellite Boulevard Suwanee, GA 30024
Toll Free: 800-433-4822 https://mitsubishicomfort.com

METUS_2025-02_PROPIN

© 2025 Mitsubishi Electric Trane HVAC US LLC. All rights reserved.

MITSUBISHI ELECTRIC
COOLING & HEATING

M- and P-SERIES

Model: PAR-31MAA

Job Name:	Location:	Date:
Purchaser:	Engineer:	
Submitted to:	For ☐Reference ☐Approval ☐Construction	
System Designation:	Schedule No.:	

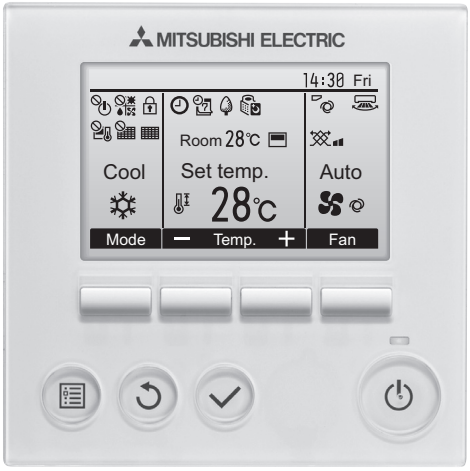

BACKLIT MA REMOTE CONTROLLER (PAR-31MAA) SPECIFICATIONS

- Controls group operation for up to 16 indoor units in a single group
- Features selectable multi-lingual LCD (English, Spanish, and French)
- Supports both Fahrenheit and Celsius
- User functions allow user to set
  - On/Off
  - Operation modes cool, heat, dry, fan
  - Set temperature
  - Fan speed setting
  - Airflow direction
- Timer Operation:
  - Weekly Timer: On/Off/Temperature setting up to 8 times per day of the week in 1-minute increments
  - Simple Timer: On and Off time can be set once within 72-hour period in 1-hour increments
  - Auto-off Timer: Turns indoor unit Off based on countdown time up to 4-hours in 30-minute increments
- Room Temperature: Displays room temperature sensed either at the indoor unit (default) or at the remote controller
- Set Temperature Range Limit: From the Backlit MA Controller, the allowable set temperature range can be reduced for cool and heat modes
- Special Function Rotation/Backup (Lead/Lag for P-Series)
- Static pressure setting (model dependent)
- Fan speed setting for use with supplemental heating function (model dependent)
- Set P-Series twinning function
- Function Lock Out: Prohibits all functions or all functions except On/Off from the backlit MA controller
- Addressing: No addressing required
- Wiring: connects using two-wire, stranded, non-polar control wire to indoor unit connection terminal or control adapter (MAC-333IF for M-Series) requires crossover wiring for indoor unit grouping
- Dimensions: 4-3/4 x 3/4 x 4-3/4" (120 x 19 x 120 mm)

Notes:

Specifications are subject to change without notice.
© 2013 Mitsubishi Electric US, Inc.

Model: PAR-31MAA - DIMENSIONS

Unit:mm[in.]

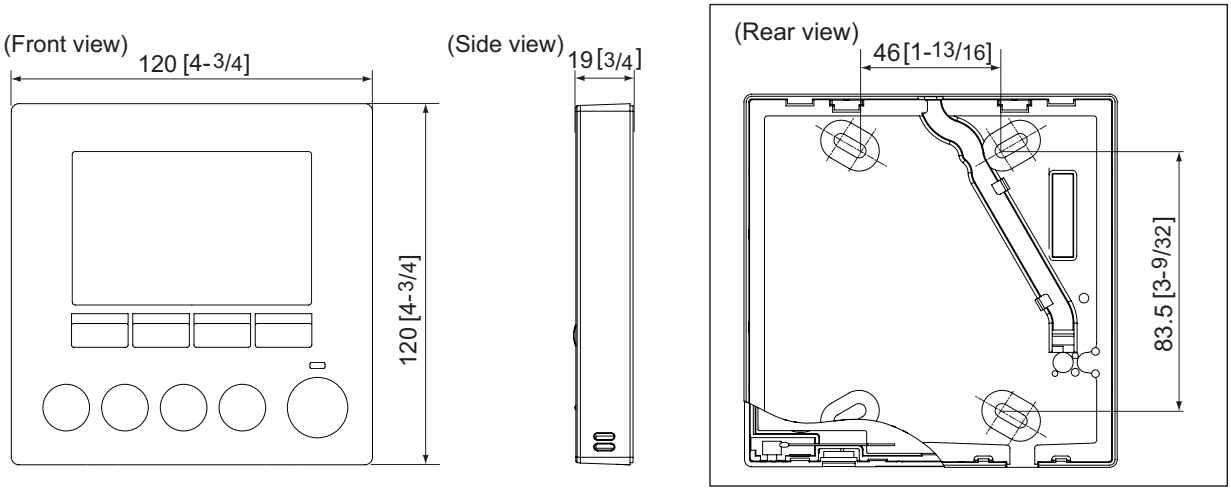

Specifications are subject to change without notice.
© 2013 Mitsubishi Electric US, Inc.

MITSUBISHI ELECTRIC
COOLING & HEATING
Live Better

1340 Satellite Boulevard
Suwanee, GA 30024
Tele: 678-376-2900 • Fax: 800-889-9904
Toll Free: 800-433-4822
www.mehvac.com

Notes

Submittal

Project Name:

10199 Alburg Springs Inspection Booth (Revision 1)

Contractor:

Engineer:

Architect:

Rep/Distributor:

Project Detail:

Customer:

Address:

City:

State:

Zip:

Submittal Date:

10/28/2025

Submitted By:

Name:

Company:

Email:

Phone:

Submittal Stage: Design Only

Submittal Documents

MSZ-GX24NL & MUZ-GX24NLHZ
22,400 BTU/H WALL-MOUNTED INDOOR UNIT
22,400 BTU/H INVERTER HYPER HEAT PUMP OUTDOOR UNIT

Job Name:	
System Reference:	Date:

Indoor Unit.....MSZ-GX24NL

Outdoor Unit.....MUZ-GX24NLHZ

INDOOR UNIT FEATURES

- Dual Barrier Coating: The patented Dual Barrier Coating reduces the collection of contaminants like dust, fibers, smoke, and oil on the inner surface of the heat pump, resulting in optimal airflow and easier maintenance.
- Econo Cool: Econo Cool temporarily and automatically adjusts the airflow based on heat exchanger temperature. The set temperature is increased slightly, which saves energy, while maintaining comfort.
- Filter: Electrostatic Enzyme filter (built-in) that is charged with static electricity and designed to attract and filter charged particles which can include airborne non-living particulates. and Microparticle filter (optional) that removes non-living particulate matter, which can include dust and smoke.
- Multiple control options including: Back-lit screen hand-held Remote Controller (provided with unit), comfort app, third-party interfaces and both wired and wireless controllers
- Multiple fan speed options: Low, Medium, High, Powerful, Auto
- Powerful Mode: Temporarily drops or raises the set point and fan speed in order to quickly bring the room to the desired temperature.
- Quiet operation: Outdoor units are as quiet as a typical conversation, and most indoor units are whisper quiet.
- Slim wall-mounted indoor units provide zone comfort control
- Smart Dry Mode: Improves humidity control with minimal over-cooling of the space
- Smart Set: recalls a preferred preset temperature setting at the touch of a button
- Wi-Fi enabled units pair with the Comfort app for complete control over temperature, fan speeds, modes, schedules, and more.

OUTDOOR UNIT FEATURES

- Blue Fin Coating: An anti-corrosion treatment applied to the aluminum fins of the heat exchanger of the outdoor unit to protect against corrosion caused by salt, sulfur, and other airborne contaminants, especially in coastal and industrial areas.
- Built-in base pan heater
- DC Fan Motor
- Hot-start technology: The fan only blows air when the heat exchanger has warmed, preventing blasts of cold air at start-up.
- Hyper-Heating INVERTER® (H2i®): 100% heating capacity down to 5° F with guaranteed heating down to -22° F.

© 2025 Mitsubishi Electric Trane HVAC US LLC. All rights reserved.

SPECIFICATIONS: MSZ-GX24NL & MUZ-GX24NLHZ

Cooling at 95F[1]	Maximum Capacity	Btu/h	27,000
	Rated Capacity	Btu/h	22,400
	Minimum Capacity	Btu/h	7,400
	Maximum Power Input	W	2,890
	Rated Power Input	W	1,720
	Moisture Removal	Pints/h	4.5
	Sensible Heat Factor	-	0.78
	Power Factor [208V / 230V]	%	98 / 98
Heating at 47F[2]	Maximum Capacity	Btu/h	32,000
	Rated Capacity	Btu/h	21,200
	Minimum Capacity	Btu/h	6,800
	Maximum Power Input	W	4,000
	Rated Power Input	W	1,500
	Power Factor [208V / 230V]	%	97 / 97
Heating at 17F[3]	Maximum Capacity	Btu/h	25,400
	Rated Capacity	Btu/h	14,000
	Maximum Power Input	W	3,500
	Rated Power Input	W	1,400
Heating at 5F[4]	Maximum Capacity	Btu/h	21,200
	Maximum Power Input	W	3,450
Heating at -5F[6]	Maximum Capacity	Btu/h	18,070
Heating at -10F[7]	Maximum Capacity	Btu/h	16,410
Heating at -22F[9]	Maximum Capacity	Btu/h	11,380
Efficiency	SEER2		21.5
	EER2[1]		13
	HSPF2 [IV]		10
	COP at 47°F[2]		4.14
	COP at 17°F at Maximum Capacity[3]		2.12
	COP at 5°F at Maximum Capacity[4]		1.8
	COP at -5°F at Maximum Capacity[6]		1.68
	COP at -10°F at Maximum Capacity[7]		1.56
	ENERGY STAR® Certified		Yes
Electrical	Voltage, Phase, Frequency	V AC / V AC, ø, Hz	208 / 230, 1, 60
	Guaranteed Voltage Range	V AC	187 - 253
	Voltage: Indoor - Outdoor, S1-S2	V AC	230
	Voltage: Indoor - Outdoor, S2-S3	V DC	24
	Short-circuit Current Rating [SCCR]	kA	5
	Recommended Fuse/Breaker Size (Outdoor)	A	25
	Recommended Wire Size [Indoor - Outdoor]	AWG	14
Indoor Unit	MCA	A	1
	Fan Motor Output	W	56
	Airflow Rate at Cooling, Dry	CFM	324, 392, 454, 636, 765
	Airflow Rate at Cooling, Wet	CFM	292, 353, 408, 573, 688
	Airflow Rate at Heating, Dry	CFM	344, 392, 454, 530, 765
	Sound Pressure Level [Cooling]	dB (A)	30, 37, 41, 48, 53
	Sound Pressure Level [Heating]	dB (A)	30, 37, 41, 45, 50
	Drain Pipe Size O.D.	inch [mm]	5/8 [15.88]
	Dual Barrier Coating on Heat Exchanger		Yes
	External Finish Color		Munsell 0.7PB 9.2/0.4
	Unit Dimensions (W x D x H)	inch x inch x inch [mm x mm x mm]	43-5/16 x 10-1/8 x 12-13/16 [1,100 x 257 x 325]
	Package Dimensions (W x D x H)	inch x inch x inch [mm x mm x mm]	45-1/2 x 15-1/2 x 13-1/2 [1,160 x 400 x 340]
	Unit Weight	lbs [kg]	37 [16.50]
	Package Weight	lbs [kg]	42 [18.80]
	Fan Motor Type		DC Motor
IDU Operating Temp. Range	Cooling Intake Air Temp [Maximum / Minimum]	°FDB, °FWB / °FDB, °FWB	90, 73 / 67, 57
	Heating Intake Air Temp [Maximum / Minimum]	°FDB	80 / 70

NOTES
[1]Cooling at 95°F (Indoor: 80°F DB, 67°F WB // Outdoor: 95°F DB, 75°F WB)
[2]Heating at 47°F (Indoor: 70°F DB, 60°F WB // Outdoor: 47°F DB, 43°F WB)
[3]Heating at 17°F (Indoor: 70°F DB, 60°F WB // Outdoor: 17°F DB, 15°F WB)
[4]Heating at 5°F (Indoor: 70°F DB, 60°F WB // Outdoor: 5°F DB, 4°F WB)
[6]Heating at -5°F (Indoor: 70°F DB, 60°F WB // Outdoor: -5°F DB, -6°F WB)
[7]Heating at -10°F (Indoor: 70°F DB, 60°F WB // Outdoor: -10°F DB, -11°F WB)
[9]Heating at -22°F (Indoor: 70°F DB, 60°F WB // Outdoor: -22°F DB, -23°F WB)
˙ Indoor/Outdoor Unit Operating Temperature Range (Cooling Air Temp [Maximum / Minimum]):
• Applications should be restricted to comfort cooling only; equipment cooling applications are not recommended for low ambient temperature conditions.
** Outdoor Unit Operating Temperature Range (Cooling Thermal Lock-out / Re-start Temperatures; Heating Thermal Lock-out / Re-start Temperatures):
• System cuts out in heating mode and automatically restarts at these temperatures.

© 2025 Mitsubishi Electric Trane HVAC US LLC. All rights reserved.

SPECIFICATIONS: MSZ-GX24NL & MUZ-GX24NLHZ

Outdoor Unit	MCA	A	23
	MOCP	A	25
	Fan Motor Full Load Amperage	A	0.76
	Fan Motor Output	W	55
	Airflow Rate Cooling	CFM	2,202
	Airflow Rate Heating	CFM	1,934
	Defrost Method		Reverse Cycle
	Coating on Heat Exchanger (Bluefin, Sea Coast)		Yes, Yes
	Sound Pressure Level, Cooling[1]	dB (A)	55
	Sound Pressure Level, Heating[2]	dB (A)	55
	Compressor Type		Twin Rotary
	Compressor Model		SRB172FQHMT
	Compressor Oil [Type // Charge]	Type // oz	RM68EH // 14.5
	External Finish Color		Munsell 3Y 7.8/1.1
	Base Pan Heater		Built-in
	Unit Dimensions (W x D x H)	inch x inch x inch [mm x mm x mm]	33-1/16 x 13 x 34-5/8 [840 x 330 x 880]
	Package Dimensions (W x D x H)	inch x inch x inch [mm x mm x mm]	38-3/4 x 16-3/4 x 40-3/4 [980 x 420 x 1,030]
	Unit Weight	lbs [kg]	117 [52.80]
	Package Weight	lbs [kg]	137 [61.70]
ODU Operating Temp. Range	Cooling Intake Air Temp [Maximum / Minimum*]	°FDB	115 / 14
	Cooling Thermal Lock-out / Re-start Temperatures**	°FDB	-1 / 3
	Heating Intake Air Temp [Maximum / Minimum]	°FDB, °FWB / °FDB, °FWB	75, 65 / -22, -23
	Heating Thermal Lock-out / Re-start Temperatures**	°FDB	-34 / -22.5
Refrigerant	Type		R454B
	Pre-Charged Refrigerant Amount	lbs, oz	3, 12
	Maximum Pre-Charged Piping Length	ft [m]	50 [15]
	Additional Refrigerant Charge Per Additional Piping Length	oz/ft	0.22
Piping	Gas Pipe Size O.D. [Flared]	inch [mm]	5/8 [15.88]
	Liquid Pipe Size O.D. [Flared]	inch [mm]	1/4 [6.35]
	Maximum Piping Length	ft [m]	100 [30]
	Maximum Height Difference	ft [m]	50 [15]
	Maximum Number of Bends		10

NOTES
[1]Cooling at 95°F (Indoor: 80°F DB, 67°F WB // Outdoor: 95°F DB, 75°F WB)
[2]Heating at 47°F (Indoor: 70°F DB, 60°F WB // Outdoor: 47°F DB, 43°F WB)
[3]Heating at 17°F (Indoor: 70°F DB, 60°F WB // Outdoor: 17°F DB, 15°F WB)
[4]Heating at 5°F (Indoor: 70°F DB, 60°F WB // Outdoor: 5°F DB, 4°F WB)
[6]Heating at -5°F (Indoor: 70°F DB, 60°F WB // Outdoor: -5°F DB, -6°F WB)
[7]Heating at -10°F (Indoor: 70°F DB, 60°F WB // Outdoor: -10°F DB, -11°F WB)
[9]Heating at -22°F (Indoor: 70°F DB, 60°F WB // Outdoor: -22°F DB, -23°F WB)
* Indoor/Outdoor Unit Operating Temperature Range (Cooling Air Temp [Maximum / Minimum]):
• Applications should be restricted to comfort cooling only; equipment cooling applications are not recommended for low ambient temperature conditions.
** Outdoor Unit Operating Temperature Range (Cooling Thermal Lock-out / Re-start Temperatures; Heating Thermal Lock-out / Re-start Temperatures):
• System cuts out in heating mode and automatically restarts at these temperatures.

© 2025 Mitsubishi Electric Trane HVAC US LLC. All rights reserved.

INDOOR UNIT ACCESSORIES: MSZ-GX24NL

Wired Remote Controller	Deluxe MA Wired Remote Controller [1]	PAR-42MAAUB
	Simple Direct Wired Remote Controller	PAC-SDW01RC-1
	Simple MA Remote Controller [1]	PAC-YT53CRAU-J
	Touch MA Wired Remote Controller [1]	PAR-CT01MAU-SB
Filter	Electro Static Anti-allergy Enzyme Filter	MAC-2310FT-E
	Electro Static Anti-allergy Enzyme Filter	MAC-2320FT-E
	Microparticle Filter	MAC-EMF615FT-E
	Microparticle Filter	MAC-EMF515FT-E
Control Interface	Airzone Wired Blueface Controller Black	AZZBSBLUEZEROCN
	Airzone Wired Blueface Controller White	AZZBSBLUEZEROCB
	Airzone Wireless Lite Controller Black	AZZBSLITERN
	Airzone Wireless Lite Controller White	AZZBSLITERB
	Airzone Wireless Think Controller Black	AZZBSTHINKRN
	Airzone Wireless Think Controller White	AZZBSTHINKRB
	IT Extender for kumo station	PAC-WHS01IE-E
	kumo station for the Comfort app	PAC-WHS01HC-E
	M-Net I/O Control Interface for M-Series [2]	MAC-334IF-E
	Procon BACnet and Modbus Interface	PAC-UKPRC001-CN-1
	Thermostat Interface for 3rd Party Thermostats	PAC-US445CN-1
	Wireless Interface Adapter for the Comfort app	PAC-USWHS002-WF-2
Lineset	100 x 1/4 x 100 x 5/8 Lineset Twin-Tube Insulation	MLS145812T-100
	15 x 1/4 x 15 x 5/8 Lineset Twin-Tube Insulation	MLS145812T-15
	30 x 1/4 x 30 x 5/8 Lineset Twin-Tube Insulation	MLS145812T-30
	50 x 1/4 x 50 x 5/8 Lineset Twin-Tube Insulation	MLS145812T-50
	65 x 1/4 x 65 x 5/8 Lineset Twin-Tube Insulation	MLS145812T-65
Condensate	Blue Diamond Advanced Mini Condensate Pump w Reservoir Sensor 208230V recommended	X87-721
	Blue Diamond MaxiBlue Advanced Mini Condensate Pump w Reservoir Sensor 110V up to 48000 BTUH recommended	X87-711
	Blue Diamond MegaBlue Advanced Condensate Pump w Reservoir Sensor	X87-835
	Blue Diamond Sensor Extension Cable 15 Ft	C13-103
	Drain Pan Level SensorControl	SS610E
	Refco Condensate Pump 100-240 VAC	GOBI-II
	Refco Condensate Pump 100-240 VAC up to 120000 BTUH	COMBI
	Sauermann Condensate Pump	SI30-230
Disconnect Switch	30A600VUL fits 2 X 4 utility box - Black	TAZ-MS303
	30A600VUL fits 2 X 4 utility box - White	TAZ-MS303W
Remote Sensor	Remote Temperature Sensor for MFZ MLZ and MSZ models	M21EAA307
	Wireless temperature and humidity sensor for the Comfort app	PAC-USWHS003-TH-1
Wireless Remote Controller	Lockdown Bracket for Wireless Handheld Remote Controllers	RCMKP1CB
	RedLINK Wireless Remote Controller	MHK2
Power Supplies and Auxiliary Components	Backup Heat Relay Kit Adapter for CN24 or CN152 Connector	CN24RELAY-KIT-CM3
Drain Hose	Flexible Mini-Split Drain Hose	DRX-16

NOTES
[2]Allows IDU Connection to MA Controller:
Deluxe MA Remote Controller
Simple MA Controller
Touch MA Controller
[1]Requires MAC-334IF-E Adapter
[1]Requires MAC-334IF-E Adapter
[1]Requires MAC-334IF-E Adapter

© 2025 Mitsubishi Electric Trane HVAC US LLC. All rights reserved.

OUTDOOR UNIT ACCESSORIES: MUZ-GX24NLHZ

Mini-Split Wire	14 Gauge 4 wire Armored MiniSplit Cable250 ft roll	SW144-250
	14 Gauge 4 wire Armored MiniSplit Cable50 ft roll	SW144-50
	14 Gauge 4 wire MiniSplit Cable250 ft roll	S144-250
	14 Gauge 4 wire MiniSplit Cable50 ft roll	S144-50
	16 Gauge 4 wire Armored MiniSplit Cable250 ft roll	SW164-250
	16 Gauge 4 wire Armored MiniSplit Cable50 ft roll	SW164-50
	16 Gauge 4 wire MiniSplit Cable250 ft roll	S164-250
	16 Gauge 4 wire MiniSplit Cable50 ft roll	S164-50
Stand	18 Single Fan Stand	QSMS1801M
	24 Single Fan Stand	QSMS2401M
	Condenser Wall Bracket	QSWB2000M-1
	Condenser Wall Bracket - Stainless Steel Finish	QSWBSS
	Outdoor Unit 3-14 inch Mounting Base Pair - Plastic	DSD-400P
	Outdoor Unit Stand 12 High	QSMS1201M
Snow/Rain Diverter	SnowRain Diverter	SRD-3
Control/Service Tool	M- & P-Series Maintenance Tool Cable Set	M21EC0397
	Maintenance Tool Interface	PAC-USCMS-MN-1
Air Outlet Guide	Air Outlet Guide	MAC-890SG-E
Mounting Pad	Condensing Unit Mounting Pad 16 x 36 x 3	ULTRILITE1
Hail Guards	Hail Guard	HG-A7
NOTES		

© 2025 Mitsubishi Electric Trane HVAC US LLC. All rights reserved.

INDOOR UNIT DIMENSIONS: MSZ-GX24NL

MSZ-GX18NL- U1 MSY-GX18NL- U1
MSZ-GX24NL- U1 MSY-GX24NL- U1
MSZ-GX30NL- U1 MSY-GX30NL- U1
MSZ-GX36NL- U1 MSY-GX36NL- U1

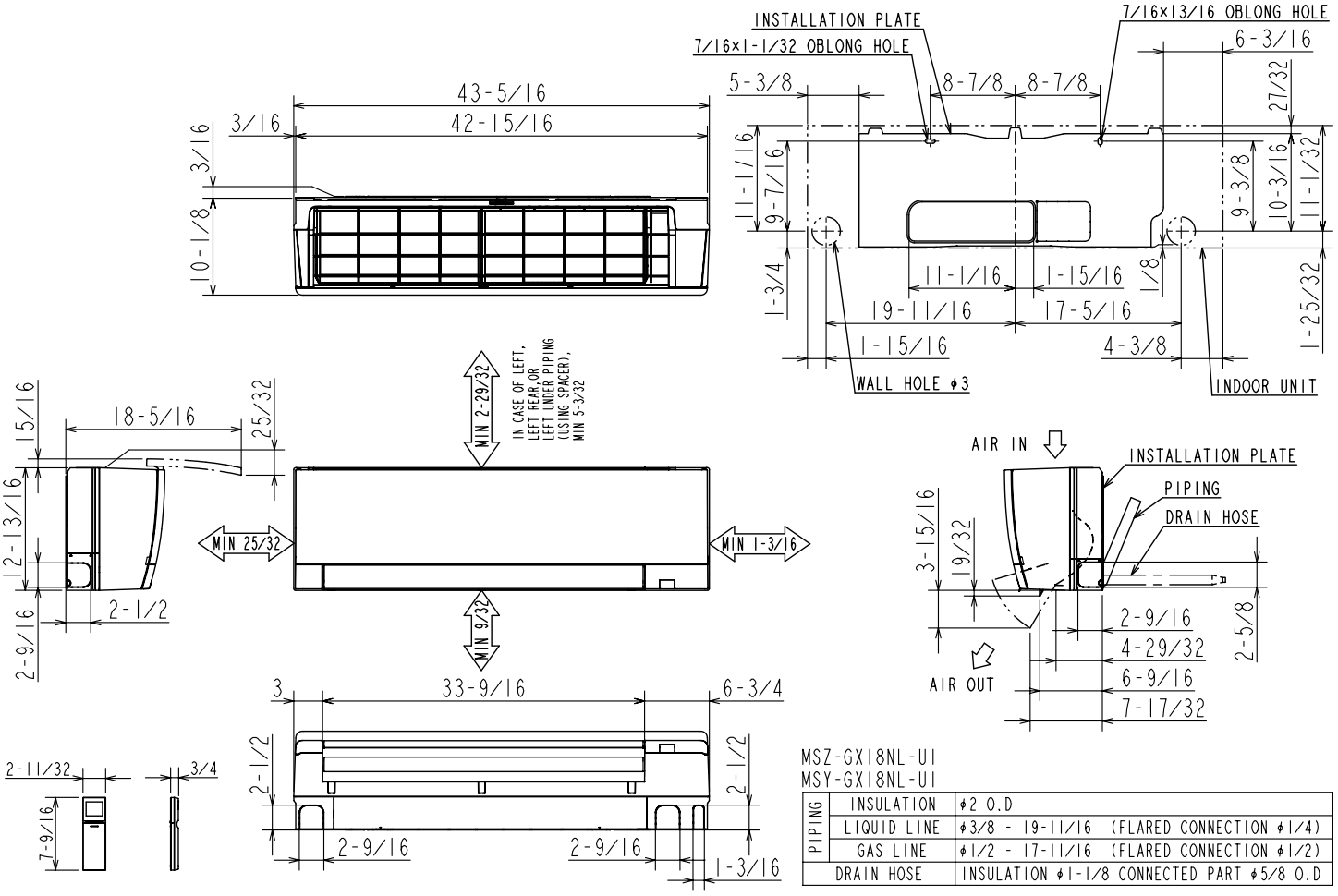

MSZ-GX18NL-UI
MSY-GX18NL-UI

PIPING	INSULATION	ϕ2 O.D
	LIQUID LINE	ϕ3/8 - 19-11/16 (FLARED CONNECTION ϕ1/4)
	GAS LINE	ϕ1/2 - 17-11/16 (FLARED CONNECTION ϕ1/2)
DRAIN HOSE		INSULATION ϕ1-1/8 CONNECTED PART ϕ5/8 O.D

MSZ-GX24/30/36NL-UI
MSY-GX24/30/36NL-UI

PIPING	INSULATION	ϕ2 O.D
	LIQUID LINE	ϕ3/8 - 19-11/16 (FLARED CONNECTION ϕ1/4)
	GAS LINE	ϕ1/2 - 17-11/16 (FLARED CONNECTION ϕ5/8)
DRAIN HOSE		INSULATION ϕ1-1/8 CONNECTED PART ϕ5/8 O.D

© 2025 Mitsubishi Electric Trane HVAC US LLC. All rights reserved.

OUTDOOR UNIT DIMENSIONS: MUZ-GX24NLHZ

MUZ-GX18NL-U1
MUZ-GX24NL-U1
MUZ-GX18NLHZ-U1
MUZ-GX24NLHZ-U1
MUY-GX18NL-U1
MUY-GX24NL-U1
MUZ-GX30NL-U1
MUZ-GX36NL-U1
MUY-GX30NL-U1
MUY-GX36NL-U1

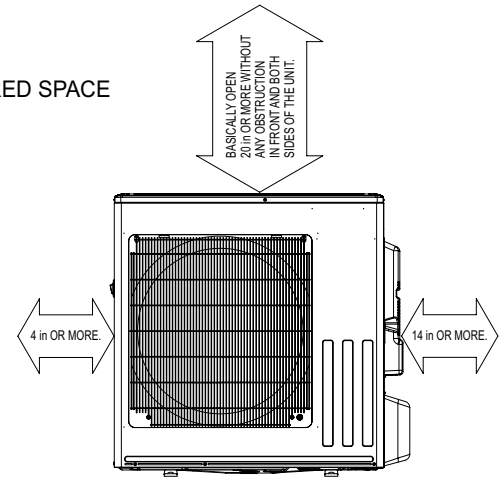

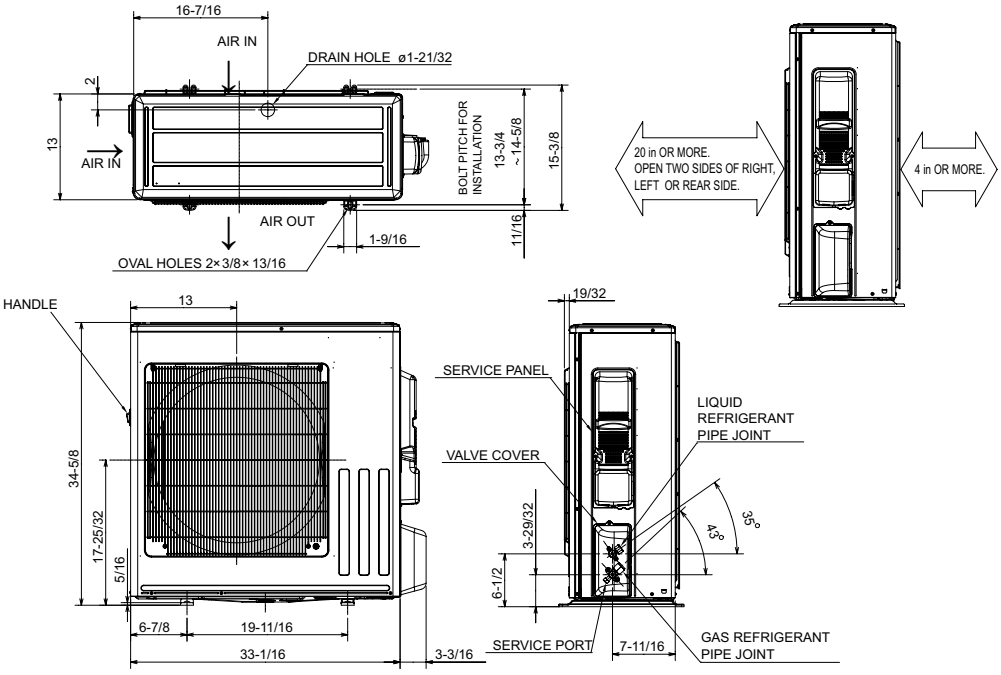

MUZ-GX18NL MUZ-GX18NLHZ MUY-GX18NL

REFRIGERANT PIPE JOINT	LIQUID REFRIGERANT PIPE	FLARED 1/4"
	GAS REFRIGERANT PIPE	FLARED 1/2"

MUZ-GX24/30/36NL MUZ-GX24NLHZ MUY-GX24/30/36NL

REFRIGERANT PIPE JOINT	LIQUID REFRIGERANT PIPE	FLARED 1/4"
	GAS REFRIGERANT PIPE	FLARED 5/8"

1340 Satellite Boulevard Suwanee, GA 30024
Toll Free: 800-433-4822 https://mitsubishicomfort.com

METUS_2025-03_PROPIN

© 2025 Mitsubishi Electric Trane HVAC US LLC. All rights reserved.

Notes