RTS® Humidifier RX Series

ELECTRIC RESISTIVE HUMIDIFIER

From providing comfort humidity to meeting the strictest clean-room requirements, the RTS electric humidifier is designed to meet the humidification demands of any building environment. The RTS humidifier RX series is an electric humidifier that uses resistive heating elements to boil water into steam. While RO/DI water will grant you the best accuracy with the RTS, any water type can be used. Drain rates are automatically determined per the quality of your water, and integrated drain water tempering is standard on every unit.

FIGURE 1-1: RTS HUMIDIFIER

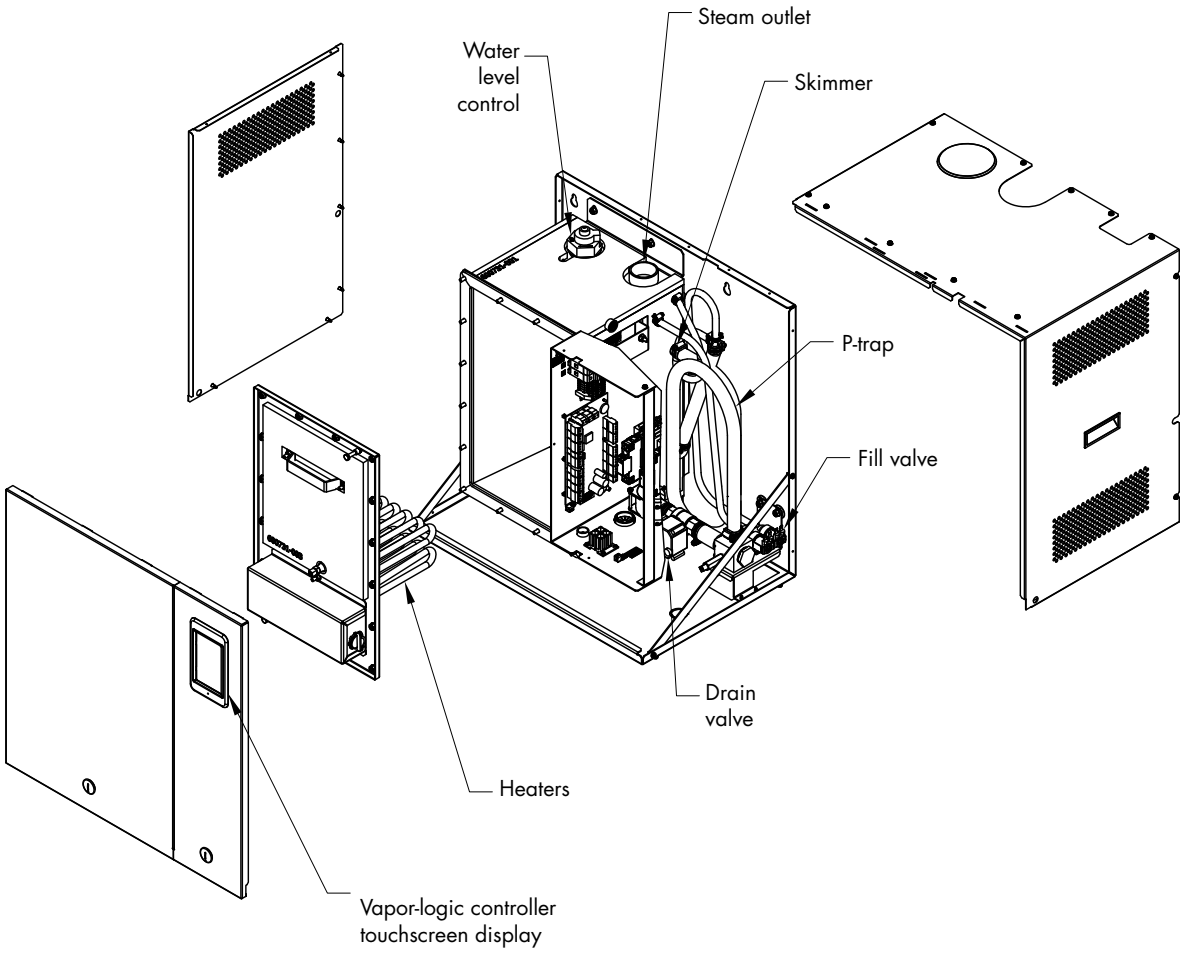

OM-8040

Models, capacities, and electrical specifications

Table 2-1:
RTS humidifier capacities, electrical specifications

RTS model	Maximum steam capacity		Power	Stages	Total max current draw (amps)										
					Single-phase						Three-phase				
	lbs/hr	kg/h	kW	Contactors	120V	208V	240V	277V	480V	600V	208V	240V	380V	480V	600V
RX-6-1	6	2.7	2	1	16.7	9.6	8.3	21.7	4.2	3.3	—	—	—	—	—
RX-12-1	12	5.4	4	1	33.3	19.2	16.7	21.7	8.3	6.7	16.7	14.4	9.10	7.2	5.8
RX-18-1	18	8.2	6	1	—	28.9	25	21.7	12.5	10	16.7	14.4	9.10	7.2	5.8
RX-24-1	24	10.9	8	1	—	38.5	33.3	43.3	16.7	13.3	25	21.7	13.70	10.8	8.7
RX-30-1	30	13.6	10	1	—	—	41.7	43.3	20.8	16.7	33.3	28.9	18.20	14.4	11.6
RX-36-1	36	16.3	12	1	—	—	—	43.3	25	20	33.3	28.9	18.20	14.4	11.6
RX-42-1	42	19.0	14	1	—	—	—	—	29.2	23.3	41.6	36.1	22.80	18	14.4
RX-48-1	48	21.8	16	1	—	—	—	—	33.3	26.7	—	43.3	27.40	21.7	17.3
RX-63-1	63	28.6	21	1	—	—	—	—	43.8	35	—	—	34.2	27.1	21.7
RX-75-1	75	34.0	25	1	—	—	—	—	—	45	—	—	41	32.5	26
RX-30-2	30	13.6	10	2	—	57.7	—	—	—	—	—	—	—	—	—
RX-36-2	36	16.3	12	2	—	57.7	50	—	—	—	—	—	—	—	—
RX-48-2	48	21.8	16	2	—	76.9	66.7	86.6	—	—	50	—	—	—	—
RX-63-2	63	28.6	21	2	—	—	91.7	86.6	—	—	66.6	57.7	—	—	—
RX-75-2	75	34.0	25	2	—	—	—	—	54.2	—	83.2	72.2	—	—	—
RX-90-2	90	40.8	30	2	—	—	—	—	62.5	50	—	86.6	54.7	43.3	34.6
RX-102-2	102	46.3	34	2	—	—	—	—	70.8	56.7	—	86.6	54.7	43.3	34.6
RX-126-2	126	57.1	42	2	—	—	—	—	87.5	70	—	—	68.4	54.1	43.3
RX-144-2	144	65.3	48	2	—	—	—	—	—	80	—	—	82	65	52
RX-162-2	162	73.5	54	2	—	—	—	—	—	90	—	—	82	65	52

- All RTS humidifier models operate at 50/60 Hz.
- For wire sizing, the highest leg draw is shown due to current imbalance.
- See Table 70-1 for heaters.
- Maximum amps is determined based on the heaters used by each model. Some voltage/kW combinations show higher amperage values than what the unit capacity will allow.
- The standard Short Circuit Current Rating (SCCR) for the RTS humidifier is 5kA. A 100kA rating is available as an option.

Models, capacities, and electrical specifications (continued)

Table 3-1:
RTS humidifier capacities, electrical specifications (continued)

RTS model	Maximum steam capacity		Power	Stages	Total max current draw (amps)										
					Single-phase						Three-phase				
	lbs/hr	kg/h	kW	Contactors	120V	208V	240V	277V	480V	600V	208V	240V	380V	480V	600V
RX-63-3	63	28.6	21	3	—	115.4	—	—	—	—	—	—	—	—	—
RX-75-3	75	34.0	25	3	—	129.8	112.5	130	—	—	—	—	—	—	—
RX-90-3	90	40.8	30	3	—	—	125	130	—	—	99.9	—	—	—	—
RX-102-3	102	46.3	34	3	—	—	—	130	—	—	99.9	—	—	—	—
RX-126-3	126	57.1	42	3	—	—	—	—	—	—	124.9	108.3	—	—	—
RX-144-3	144	65.3	48	3	—	—	—	—	100	—	—	129.9	—	—	—
RX-162-3	162	73.5	54	3	—	—	—	—	112.5	—	—	129.9	—	—	—
RX-189-3	189	85.7	63	3	—	—	—	—	137.5	110	—	—	102.6	81.2	65
RX-216-3	216	98.0	72	3	—	—	—	—	—	120	—	—	123.1	97.4	77.9
RX-243-3	243	110.2	81	3	—	—	—	—	—	135	—	—	123.1	97.4	77.9
RX-102-4	102	46.3	34	4	—	173.1	150	—	—	—	—	—	—	—	—
RX-126-4	126	57.1	42	4	—	—	183.3	173.3	—	—	—	—	—	—	—
RX-144-4	144	65.3	48	4	—	—	—	173.3	—	—	133.2	—	—	—	—
RX-162-4	162	73.5	54	4	—	—	—	—	—	—	166.5	—	—	—	—
RX-216-4	216	98.0	72	4	—	—	—	—	150	—	—	173.2	—	—	—
RX-264-4	264	119.7	88	4	—	—	—	—	183.3	146.7	—	—	164.1	129.9	103.9
RX-288-4	288	130.6	96	4	—	—	—	—	—	160	—	—	164.1	129.9	103.9
RX-324-4	324	146.9	108	4	—	—	—	—	—	180	—	—	164.1	129.9	103.9

- All RTS humidifier models operate at 50/60 Hz.
- For wire sizing, the highest leg draw is shown due to current imbalance.
- See Table 70-1 for heaters.
- Maximum amps is determined based on the heaters used by each model. Some voltage/kW combinations show higher amperage values than what the unit capacity will allow.
- The standard Short Circuit Current Rating (SCCR) for the RTS humidifier is 5kA. A 100kA rating is available as an option.

Indoor and no enclosure dimensions (RX-XX-1 and RX-XX-2)

FIGURE 4-1: RTS HUMIDIFIER DIMENSIONS

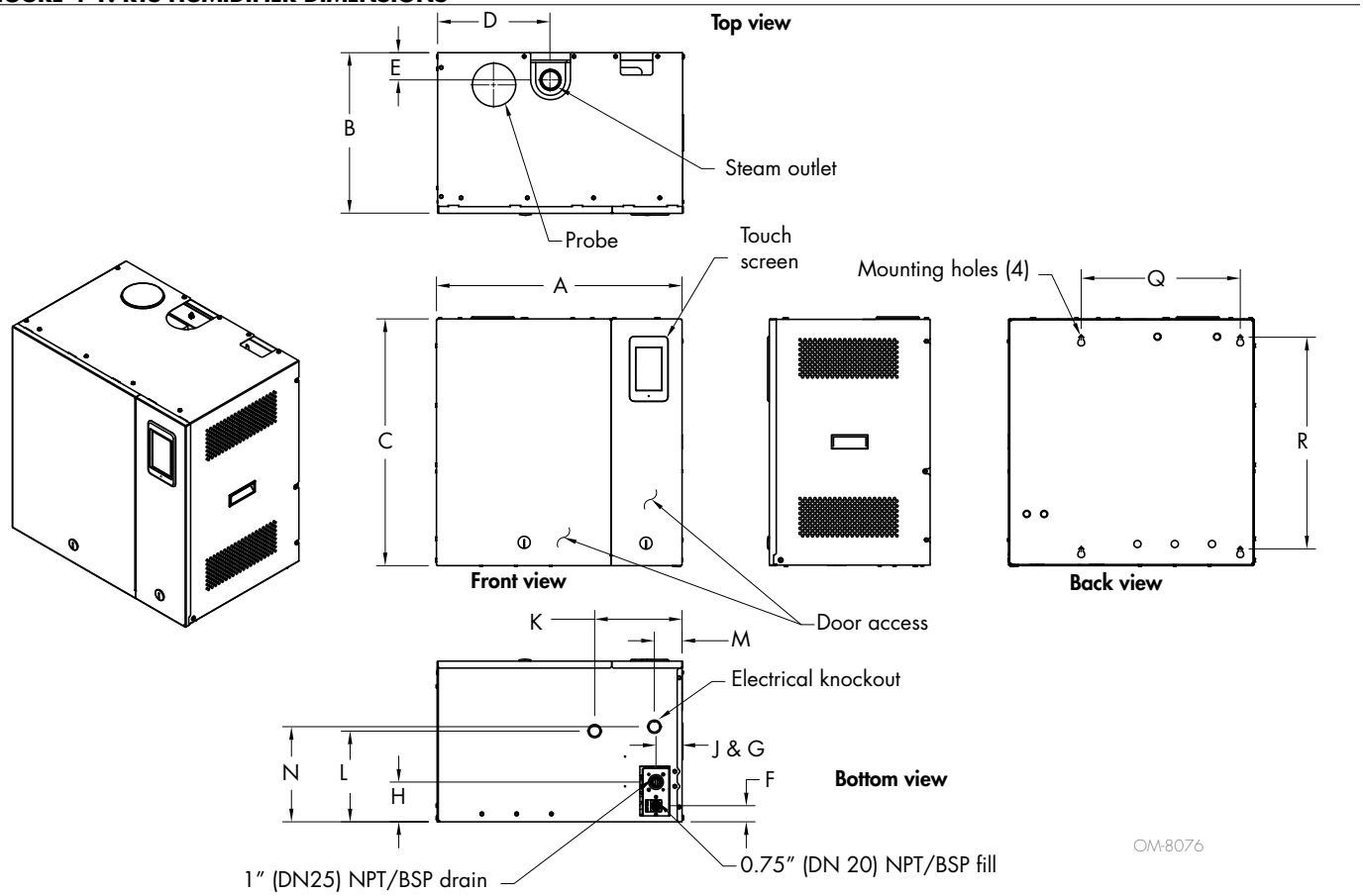

See Table 5-1 for dimension.

Indoor and no enclosure dimensions (RX-XX-1 and RX-XX-2)

Table 5-1:
Indoor unit dimensions

	Description	RX-XX-1		RX-XX-2	
		inches	mm	inches	mm
A	Overall length	24.8	629	26.1	663
B	Overall width	16.4	416	21.0	533
C	Overall height	24.9	632	31.4	798
D	Steam outlet	11.3	286	11.9	301
E		2.8	70	3.3	83
F	Supply water	1.6	41	3.0	76
G		2.6	66	1.6	41
H	Drain water	4.0	102	3.0	76
J		2.6	66	4.0	102
K	Electrical knockout (Control)	8.8	224	2.8	71
L		9.1	231	10.1	256
M	Electrical knockout (Power)	2.8	71	8.8	224
N		9.6	244	9.4	239
Q	Mounting holes	16.0	406	16.0	406
R		21.3	541	28.0	711

Indoor and no enclosure dimensions (RX-XX-3 and RX-XX-4)

FIGURE 6-1: RTS HUMIDIFIER DIMENSIONS

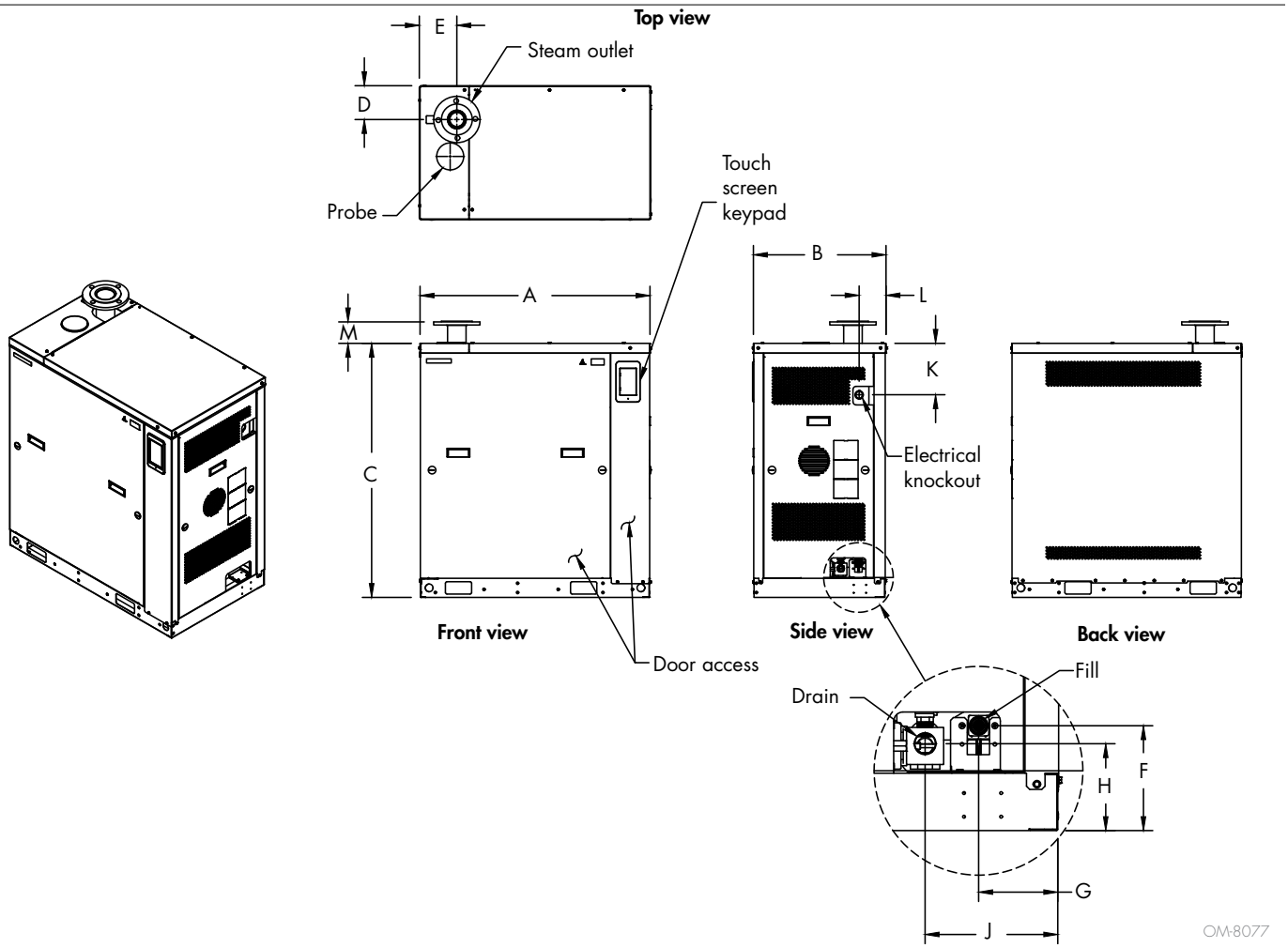

Table 6-1: Indoor unit dimensions			
	Description	**RX-XX-3 & RX-XX-4**	
		inches	**mm**
A	Overall length	37.4	950
B	Overall width	21.6	549
C	Overall height	41.3	1049
D	Steam outlet	5.3	135
E		5.9	150
F	Supply water	5.7	145
G		4.3	109
H	Drain water	4.7	119
J		7.2	183
K	Electrical knockout	8.3	211
L		4.2	107
M	Steam outlet (flange connection only)	3.5	89

Weights: RX-XX-1 and RX-XX-2

Table 7-1:
RTS humidifier (RX-XX-1 and RX-XX-2) weights

RTS model	Indoor Enclosure				Outdoor Enclosure				No Enclosure			
	Dry Weight* (Empty)		Operating Weight		Dry Weight* (Empty)		Operating Weight		Dry Weight* (Empty)		Operating Weight	
	lbs	kg	lbs	kg	lbs	kg	lbs	kg	lbs	kg	lbs	kg
RX-6-1	92.9	42.2	137.1	62.3	357.7	162.6	401.5	182.5	91.3	41.5	135.5	61.6
RX-12-1	94.1	42.8	138.3	62.9	358.5	163.0	402.7	183.0	92.5	42.0	136.7	62.1
RX-18-1	95.3	43.3	139.5	63.4	359.7	163.5	403.9	183.6	93.7	42.6	137.9	62.7
RX-24-1	95.3	43.3	139.5	63.4	359.7	163.5	403.9	183.6	93.7	42.6	137.9	62.7
RX-30-1	95.3	43.3	139.5	63.4	359.7	163.5	403.9	183.6	93.7	42.6	137.9	62.7
RX-36-1	95.3	43.3	139.5	63.4	359.7	163.5	403.9	183.6	93.7	42.6	137.9	62.7
RX-42-1	95.7	43.5	139.9	63.6	360.1	163.7	404.3	183.8	94.1	42.8	138.3	62.9
RX-48-1	96.1	43.7	140.3	63.8	360.5	163.9	404.7	184.0	94.5	43.0	138.7	63.0
RX-63-1	97.0	44.1	141.2	64.2	361.4	164.3	405.6	184.4	95.4	43.4	139.6	63.5
RX-75-1	98.0	44.5	142.2	64.6	362.4	164.7	406.6	184.8	96.4	43.8	140.6	63.9
RX-30-2	132.6	60.3	246.9	112.2	397.6	180.7	511.9	232.7	131.6	59.8	245.9	111.8
RX-36-2	132.6	60.3	246.9	112.2	397.6	180.7	511.9	232.7	131.6	59.8	245.9	111.8
RX-48-2	136.6	62.1	250.9	114.0	401.6	182.5	515.9	234.5	135.6	61.6	249.9	113.6
RX-63-2	136.6	62.1	250.9	114.0	401.6	182.5	515.9	234.5	135.6	61.6	249.9	113.6
RX-75-2	140.6	63.9	254.9	115.8	405.6	184.4	519.9	236.3	139.6	63.5	253.9	115.4
RX-90-2	138.2	62.8	252.5	114.8	403.2	183.3	517.5	235.2	137.2	62.4	251.5	114.3
RX-102-2	139.0	63.2	253.3	115.1	404.0	183.6	518.3	235.6	138.0	62.7	252.3	114.7
RX-126-2	140.0	63.6	254.3	115.6	405.0	184.1	519.3	236.0	139.0	63.2	253.3	115.1
RX-144-2	141.0	64.1	255.3	116.0	406.0	184.5	520.3	236.5	140.0	63.6	254.3	115.6
RX-162-2	142.0	64.5	256.3	116.5	407.0	185.0	521.3	236.9	141.0	64.1	255.3	116.0

* Add approximately 46 lbs (21 kg) for packaging material for shipping weight.

Weights: RX-XX-3 and RX-XX-4

Table 8-1:
RTS humidifier (RX-XX-3 and RX-XX-4) weights

RTS model	Indoor Enclosure				Outdoor Enclosure				No Enclosure			
	Dry Weight*		Operating Weight		Dry Weight*		Operating Weight		Dry Weight*		Operating Weight	
	lbs	kg	lbs	kg	lbs	kg	lbs	kg	lbs	kg	lbs	kg
RX-63-3	193.5	88.0	450.4	204.7	476.3	216.5	733.1	333.2	166.0	75.5	422.9	192.2
RX-75-3	192.6	87.5	449.5	204.3	475.4	216.1	732.2	332.8	165.1	75.0	422.0	191.8
RX-90-3	197.1	89.6	454.0	206.4	479.9	218.1	736.7	334.9	169.6	77.1	426.5	193.9
RX-102-3	197.1	89.6	454.0	206.4	479.9	218.1	736.7	334.9	169.6	77.1	426.5	193.9
RX-126-3	198.3	90.1	455.2	206.9	481.1	218.7	737.9	335.4	170.8	77.6	427.7	194.4
RX-144-3	199.5	90.7	456.4	207.4	482.3	219.2	739.1	336.0	172.0	78.2	428.9	194.9
RX-162-3	200.7	91.2	457.6	208.0	483.5	219.8	740.3	336.5	173.2	78.7	430.1	195.5
RX-189-3	202.5	92.0	459.4	208.8	485.3	220.6	741.8	337.2	175.0	79.5	431.9	196.3
RX-216-3	203.7	92.6	460.6	209.4	486.5	221.1	743.3	337.9	176.2	80.1	433.1	196.9
RX-243-3	205.2	93.3	462.1	210.0	488.0	221.8	744.8	338.6	177.7	80.8	434.6	197.5
RX-102-4	196.2	89.2	453.1	205.9	479.0	217.7	735.8	334.5	168.7	76.7	425.6	193.4
RX-126-4	201.0	91.4	457.9	208.1	483.8	219.9	740.6	336.6	173.5	78.9	430.4	195.6
RX-144-4	202.2	91.9	459.1	208.7	483.4	219.7	741.8	337.2	174.7	79.4	431.6	196.2
RX-162-4	203.8	92.6	460.7	209.4	486.6	221.2	743.4	337.9	176.3	80.1	433.2	196.9
RX-216-4	207.0	94.1	463.9	210.9	489.8	222.6	746.6	339.4	179.5	81.6	436.4	198.4
RX-264-4	209.4	95.2	466.3	211.9	492.2	223.7	749.0	340.5	181.9	82.7	438.8	199.4
RX-288-4	211.0	95.9	467.9	212.7	493.8	224.4	750.6	341.2	183.5	83.4	440.4	200.2
RX-324-4	213.0	96.8	469.9	213.6	495.8	225.3	752.6	342.1	185.5	84.3	442.4	201.1

* Add approximately 46 lbs (21 kg) for packaging material for shipping weight.

Location and clearance recommendations (Indoor and no enclosure)

FIGURE 9-1: RX SERIES CLEARANCE RECOMMENDATIONS FOR -1 AND -2 MODELS (INDOOR AND NO ENCLOSURE UNITS)

Maintain these clearances for service and maintenance.

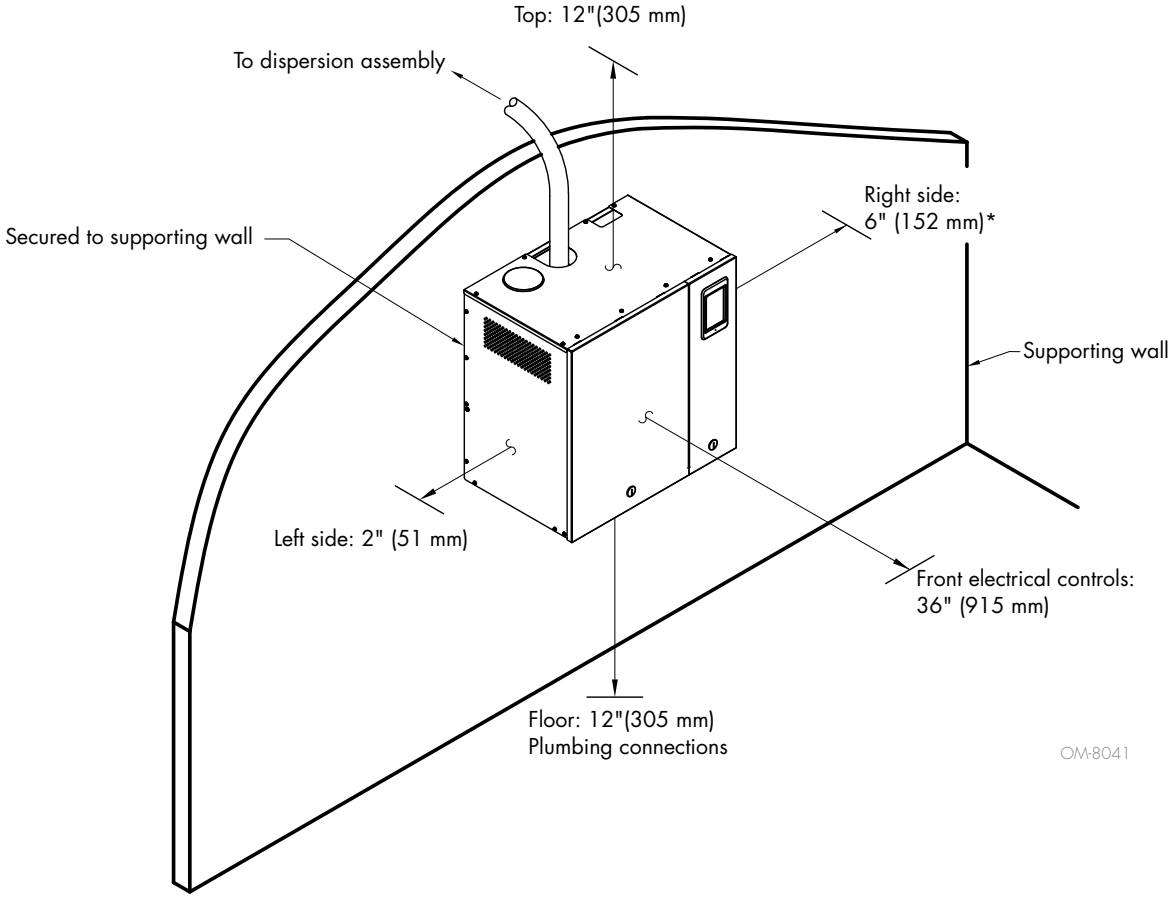

* If there is more space available, increase the clearance on this side of the unit. Infrequent access may be required to the hoses behind the electrical cabinet.

Location and clearance recommendations (Indoor and no enclosure)

FIGURE 10-1: RX SERIES CLEARANCE RECOMMENDATIONS FOR -3 AND -4 MODELS (INDOOR AND NO ENCLOSURE UNITS)

Maintain these clearances for service and maintenance.

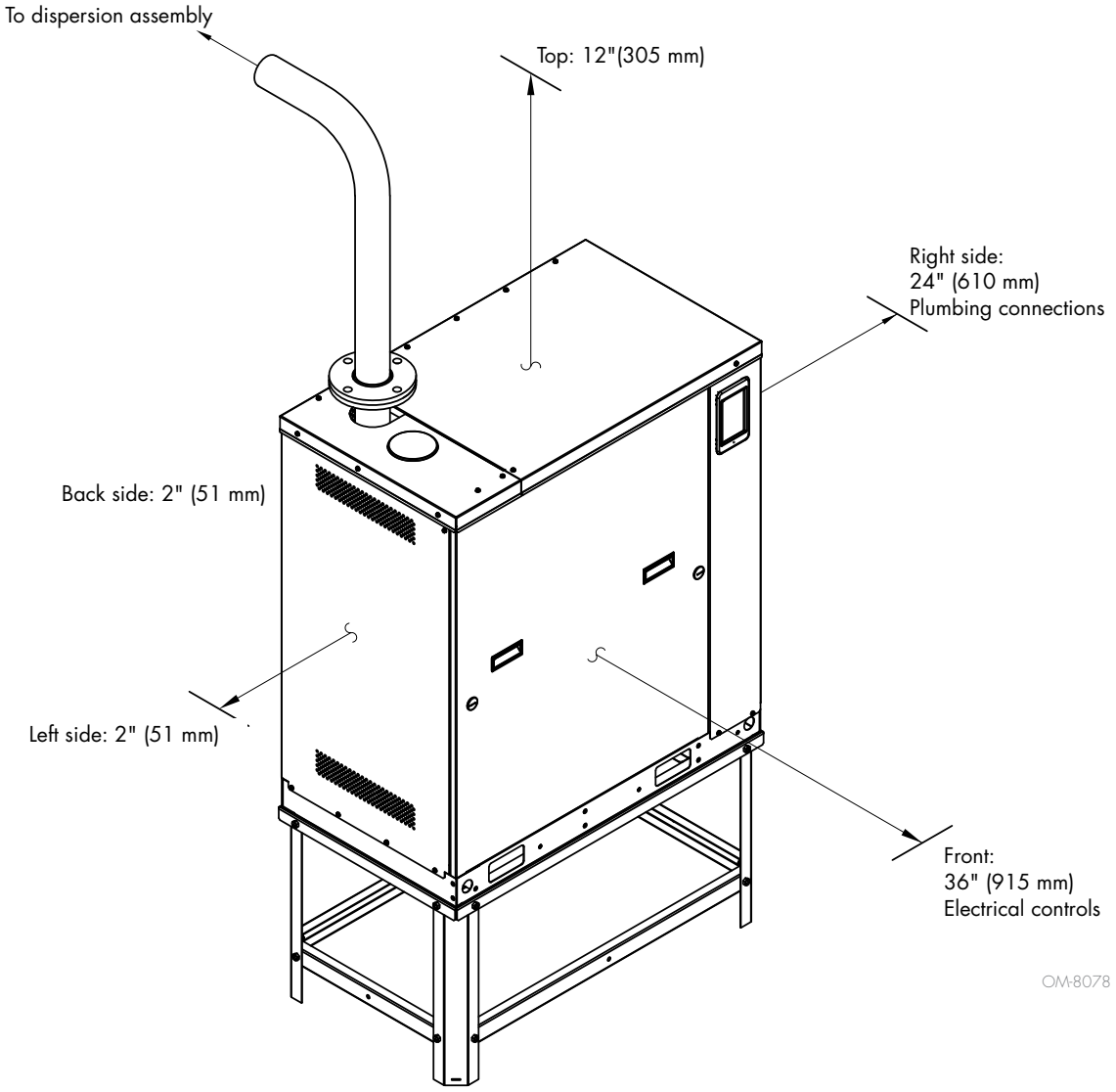

Table 10-1:
Floor stand weights and height (for indoor enclosures)

Part number	Unit size	Weight configuration				Height	
		Assembled		Shipping		inches	mm
		lbs	kg	lbs	kg		
600935	-2 stage	26.8	12.2	30.8	14.0	19.25	489
600670	-3 & -4 stage	35.1	16.0	41.1	18.7		

Outdoor enclosure: Dimensions

FIGURE 11-1: OUTDOOR ENCLOSURE DIMENSIONS

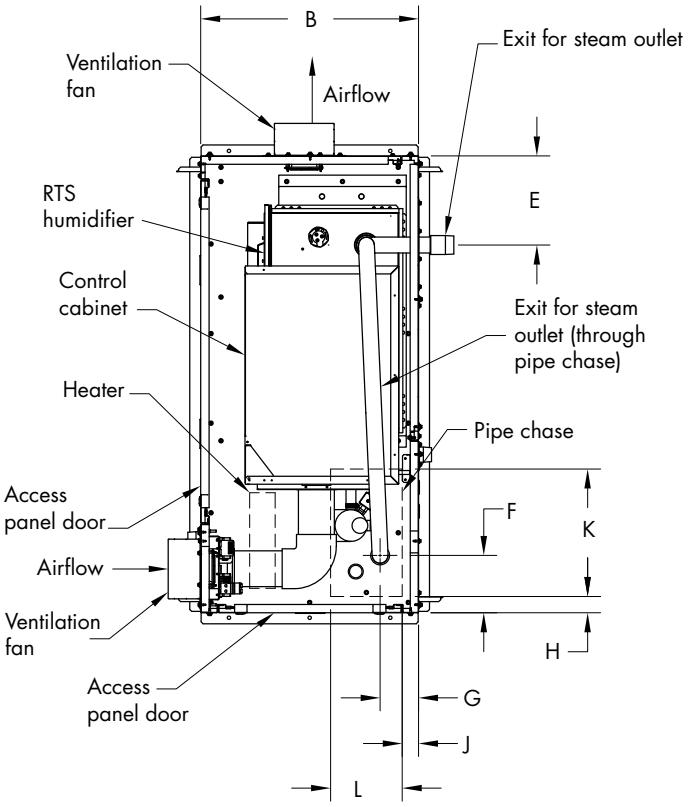

Table 11-1: Outdoor unit amps (all models)			
Full Load Amps (Heater Package)		**Full Load Amps (No Heater Package)**	
120V 60 Hz	**230V 50Hz**	**120V 60Hz**	**230V 50Hz**
7.0	3.7	0.3	0.2

Table 11-1: Outdoor enclosure dimensions							
	Description	**RX-XX-1**		**RX-XX-2**		**RX-XX-3 and RX-XX-4**	
		inches	**mm**	**inches**	**mm**	**inches**	**mm**
A	Overall length	53.6	1361	53.6	1361	62.8	1595
B	Overall width	32.8	833	32.8	833	32.8	833
C	Overall height	62.0	1575	62.0	1575	62.0	1575
D	Steam outlet (external)	55.0	1397	55.0	1397	55.0	1397
E		19.5	495	18.9	480	11.1	282
F	Steam outlet (internal)	5.6	142	6.1	155	8.6	218
G		6.7	170	6.7	170	6.2	157
H	Pipe chase position	4.4	112	4.4	112	4.4	112
J		4.4	112	4.4	112	4.4	112
K	Pipe chase dimensions	14.0	356	14.0	356	14.0	356
L		7.0	178	7.0	178	7.0	178

Outdoor enclosure: Clearances

FIGURE 12-1: RTS SERIES CLEARANCE RECOMMENDATIONS

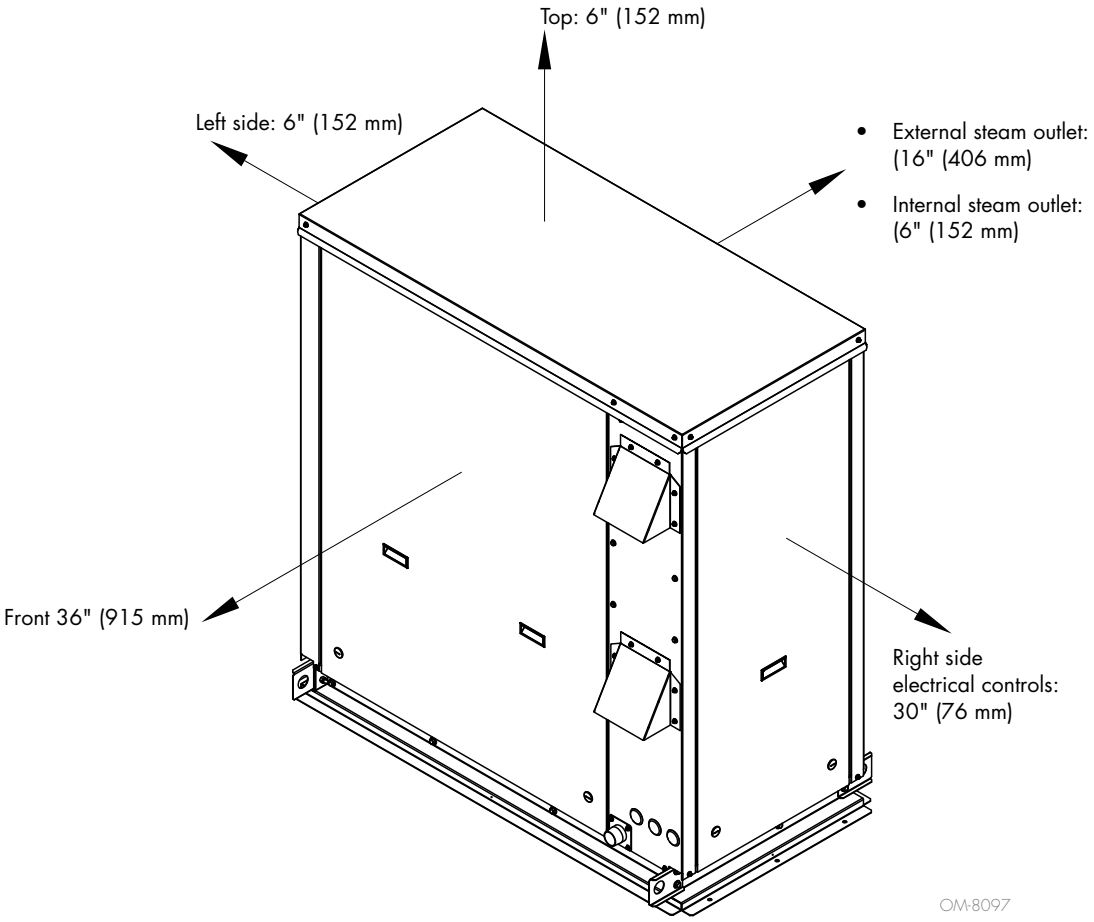

Outdoor enclosure curb details and dimensions

FIGURE 13-1: RX SERIES OUTDOOR ENCLOSURE CURB DETAILS AND DIMENSIONS

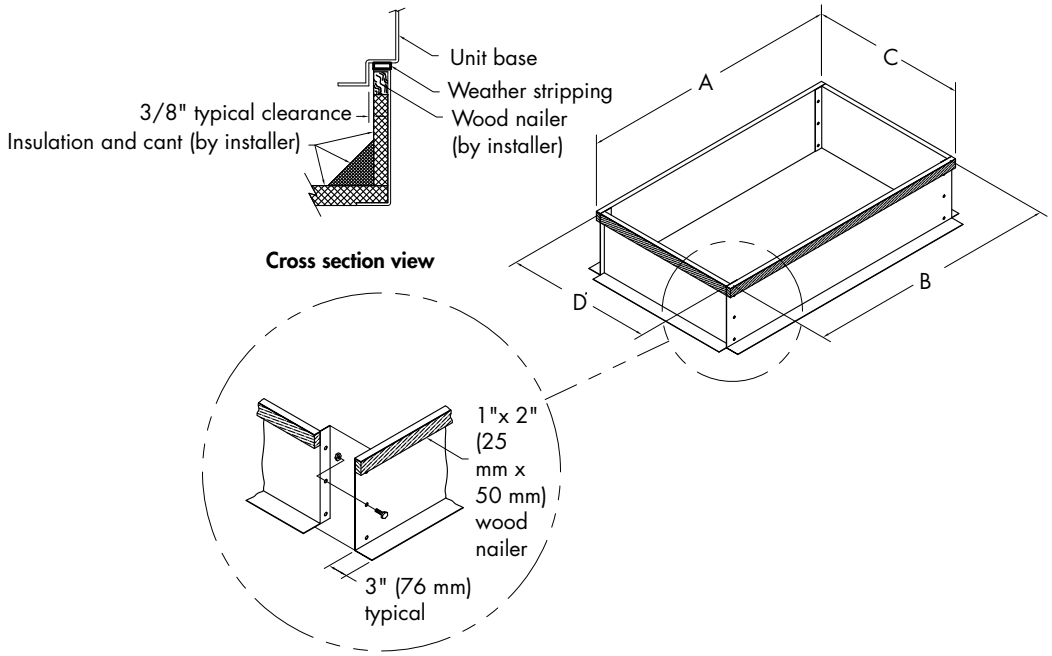

DM-7496

Table 13-1:
Outdoor enclosure curb dimensions

Outdoor enclosure model	A		B		C		D	
	inches	mm	inches	mm	inches	mm	inches	mm
RX-XX-1 and RX-XX-2	47.63	1209.8	45.48	1155.2	26.73	678.9	24.73	628.1
RX-XX-3 and RX-XX-4	56.73	1440.9	54.58	1386.3	26.73	678.9	24.73	628.1

RTS Humidifier: Dispersion

INSTALLING SPACE DISTRIBUTION UNITS (SDU)

Provide at least 6" (150 mm) clearance on each side of the SDU.

Field wiring is required to connect the SDU fan and airflow proving switch terminals to RTS electrical panel terminals. Refer to the external connections diagram in the package shipped with your unit.

Important: Maximum ambient RH must not exceed 45% for the SDU-I to operate properly.

Table 14-1:
SDU specifications

SDU model	Maximum capacity		Shipping weight		Amps at 120V (50/60 Hz)	Horsepower	cfm	m^3/s	dB*
	lbs/hr	kg/h	lbs	kg					
SDU-I-RX	30	13.6	67	30.4	3.20	1/5	760	0.36	58
SDU-E-RX	126	57	61	27.7	2.07	1/8	545	0.26	64

* Measurement taken 6.5' (2 m) in front of SDU cabinet.
RX-XX-3 and RX-XX-4 models cannot be used with an SDU.
SDU's ship separate from the RX humidifier.

RTS Humidifier: Dispersion

FIGURE 15-1: SDU-I-RX MECHANICAL DETAIL

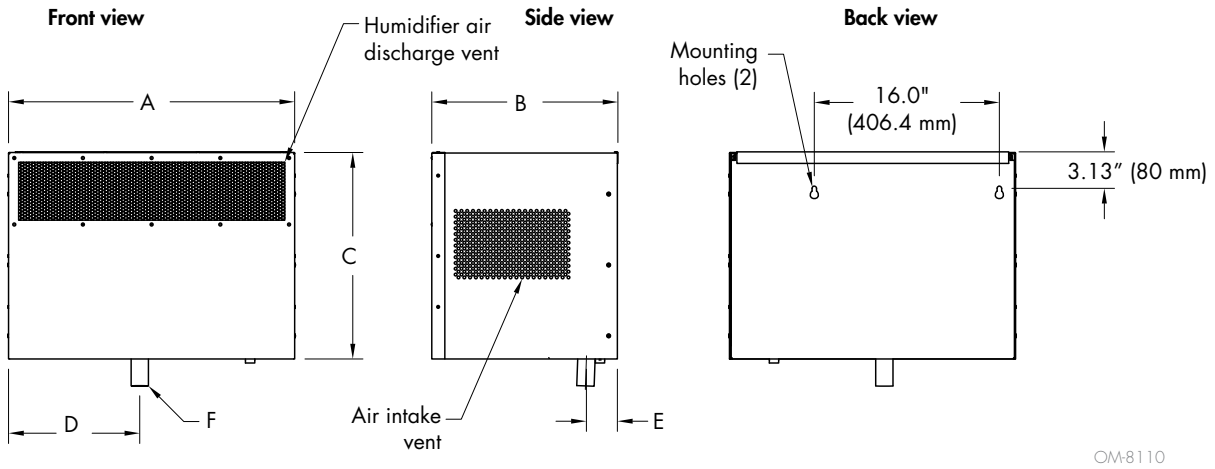

FIGURE 15-2: SDU-E-RX MECHANICAL DETAIL

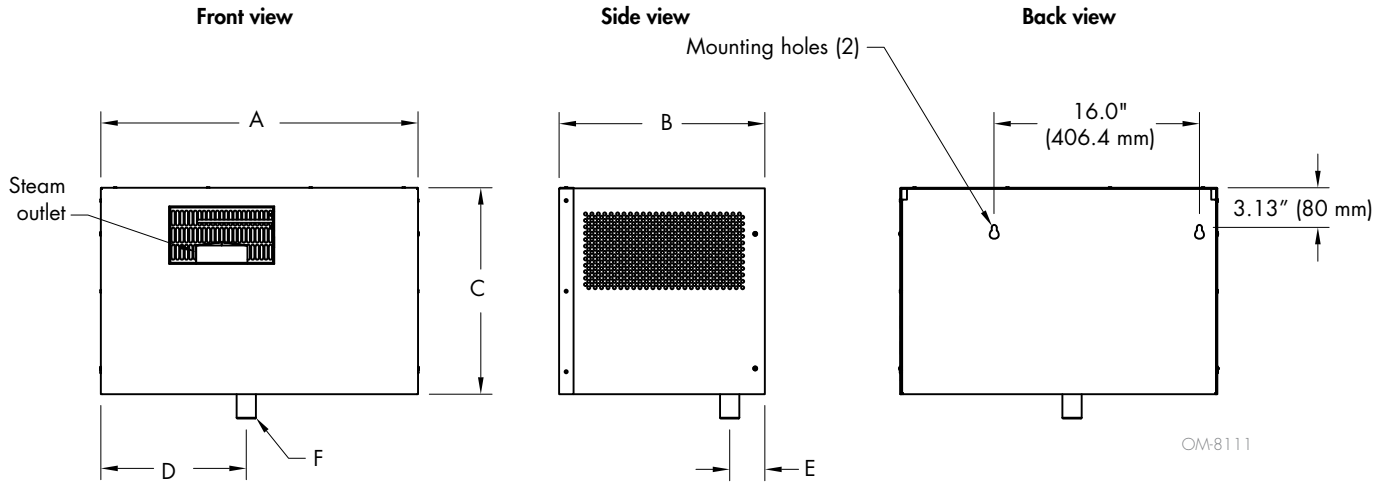

Table 15-1:
SDU dimension

SDU model	A		B		C		D		E		F	
	in	mm	in	mm	in	mm	in	mm	in	mm	in	mm
SDU-I-RX	24.7	627	16.0	406	17.9	455	11.4	290	2.8	70	Ø1.5	Ø38
SDU-E-RX	24.7	627	16.0	406	16.1	409	11.4	290	2.8	70	Ø1.5 or Ø2*	Ø38 or Ø51*

* 1.5" (38 mm) or 2" (51 mm) up to 75 lbs/hr. 2" (51 mm) only greater than 75 lbs/hr.

RTS Humidifier: Dispersion

As steam is discharged from the SDU-E, it quickly cools and turns to a visible fog that is lighter than air. As this fog is carried away from the SDU-E by the airstream, it tends to rise toward the ceiling. If this fog contacts solid surfaces (columns, beams, ceiling, pipes, etc.) before it disappears, it could collect and drip as water. The greater the space relative humidity, the more the fog will rise, throw and spread.

Table 16-1 lists the minimum rise, throw and spread non-wetting distances for SDU-E at 40%, 50% and 60% RH in the space. Surfaces cooler than ambient temperature, or objects located within this minimum dimension, can cause condensation and dripping. To avoid steam impingement on surrounding areas, observe the minimum non-wetting distances in Table 16-1.

The SDU-E contains a blower (120 V, single-phase, 60 Hz) and an airflow proving switch (field-wired to the humidifier electrical panel). A wiring diagram of the SDU-E is included with the unit.

On a call for humidity, the humidifier begins producing steam, and the start relay energizes the SDU-E blower. When the call for humidity is satisfied, the Vapor-logic controller keeps the blower running to disperse residual moisture using a time delay.

FIGURE 16-1: SDU-E RISE, SPREAD, AND THROW

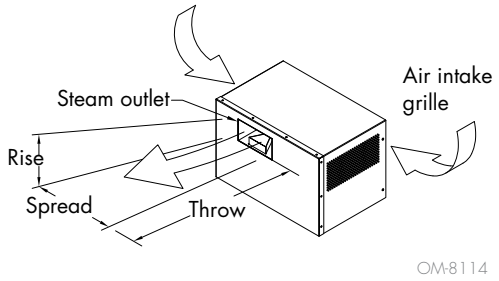

RTS Humidifier: Dispersion

Table 17-1:
SDU-E-RX minimum nonwetting distances

kW of RTS	Maximum steam capacity		40% RH @ 70 °F (21 °C)						50% RH @ 70 °F (21 °C)						60% RH @ 70 °F (21 °C)					
			Rise		Spread		Throw		Rise		Spread		Throw		Rise		Spread		Throw	
	lbs/hr	kg/h	ft	m	ft	m	ft	m	ft	m	ft	m	ft	m	ft	m	ft	m	ft	m
2	6	2.7	1.0	0.3	1.0	0.3	5.0	1.5	1.5	0.5	1.5	0.5	6.5	2.0	2.5	0.8	2.5	0.8	7.5	2.3
4	12	5.4	1.0	0.3	1.0	0.3	5.0	1.5	1.5	0.5	1.5	0.5	6.5	2.0	2.5	0.8	2.5	0.8	7.5	2.3
6	18	8.2	1.0	0.3	1.0	0.3	5.0	1.5	1.5	0.5	1.5	0.5	6.5	2.0	2.5	0.8	2.5	0.8	7.5	2.3
8	24	10.9	1.0	0.3	1.0	0.3	5.5	1.7	1.5	0.5	1.5	0.5	6.5	2.0	2.5	0.8	2.5	0.8	7.5	2.3
10	30	13.6	1.5	0.5	1.5	0.5	6.0	1.8	2.0	0.6	2.0	0.6	7.0	2.1	3.0	1.0	3.0	1.0	8.0	2.5
12	36	16.3	1.5	0.5	1.5	0.5	6.0	1.8	2.0	0.6	2.0	0.6	7.0	2.1	3.0	1.0	3.0	1.0	8.0	2.5
14	42	19.1	2.0	0.6	2.0	0.6	7.0	2.1	2.0	0.6	2.0	0.6	7.0	2.1	3.0	1.0	3.0	1.0	9.0	2.7
16	48	21.8	2.0	0.6	2.0	0.6	7.0	2.1	2.0	0.6	2.0	0.6	7.0	2.1	3.0	1.0	3.0	1.0	9.0	2.7
21	63	28.6	2.0	0.6	2.0	0.6	7.5	2.3	2.5	0.8	2.5	0.8	10.0	3.0	3.0	1.0	3.0	1.0	12.0	3.7
25	75	34.0	2.0	0.6	2.0	0.6	8.0	2.5	2.5	0.8	2.5	0.8	10.5	3.2	3.5	1.1	3.5	1.1	12.5	3.8
30	90	40.9	2.0	0.6	2.0	0.6	8.0	2.5	2.5	0.8	2.5	0.8	10.5	3.2	3.5	1.1	3.5	1.1	12.5	3.8
34	102	46.3	2.0	0.6	2.0	0.6	8.0	2.5	2.5	0.8	2.5	0.8	10.5	3.2	3.5	1.1	3.5	1.1	12.5	3.8
42	126	57.1	2.5	0.6	2.5	0.6	8.5	2.5	3.0	0.8	3.0	0.8	11	3.2	4.0	1.1	4.0	1.1	13	3.8

Notes:
- Surfaces or objects directly in the path of steam discharge may cause condensation and dripping.
- To avoid steam impingement on surrounding areas, observe the minimum nonwetting dimensions in this table.
- Rise: The minimum nonwetting height above the steam outlet of the SDU-E-RX.
- Spread: The minimum nonwetting width from the steam outlet of the SDU-E-RX. Spread dimensions greater than 3 ft (1 m) may require additional side clearance.
- Throw: The minimum nonwetting horizontal distance from the steam outlet of the SDU-E-RX.