Existing Process Chiller Located on the lower level.

Existing water lines. The new unit Supply and return are on the side of the unit. Water connection per manufactures specifications.

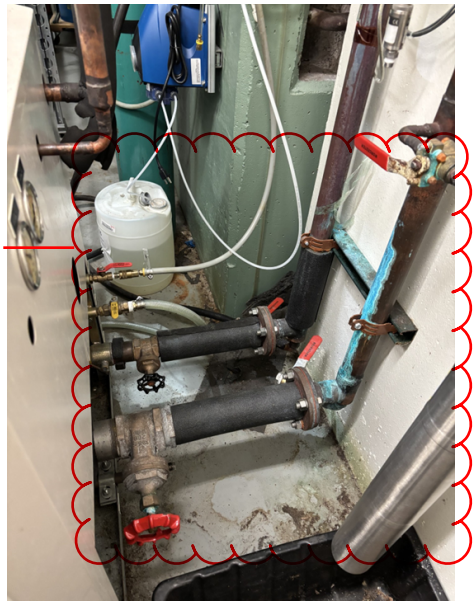

No modification to this part. Reference picture only.

Outdoor condensing unit will be prepped for future removal.

Scan for Manual

103.00766.00

New Process chill Manual.

Breaker and Panel location for the outdoor condensing unit. The conductors will be removed back to panel and this breaker will be marked as spare.

Breaker, Panel, and Disconnect for the LL Process Chiller.

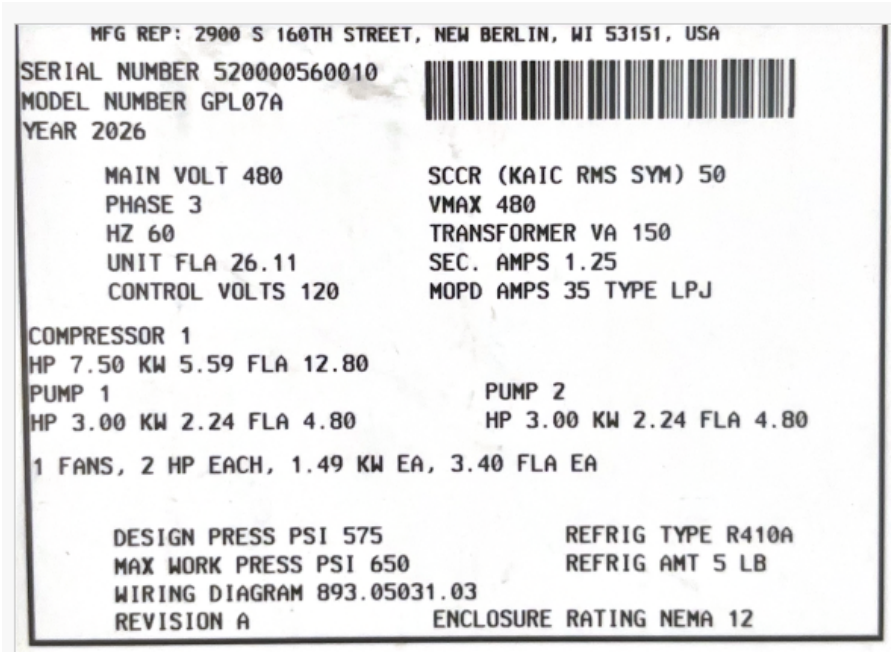

MFG REP: 2900 S 160TH STREET, NEW BERLIN, WI 53151, USA

SERIAL NUMBER 520000560010
MODEL NUMBER GPL07A
YEAR 2026

MAIN VOLT 480	SCCR (KAIC RMS SYM) 50
PHASE 3	VMAX 480
HZ 60	TRANSFORMER VA 150
UNIT FLA 26.11	SEC. AMPS 1.25
CONTROL VOLTS 120	MOPD AMPS 35 TYPE LPJ

COMPRESSOR 1
HP 7.50 KW 5.59 FLA 12.80

PUMP 1	PUMP 2
HP 3.00 KW 2.24 FLA 4.80	HP 3.00 KW 2.24 FLA 4.80

1 FANS, 2 HP EACH, 1.49 KW EA, 3.40 FLA EA

DESIGN PRESS PSI 575	REFRIG TYPE R410A
MAX WORK PRESS PSI 650	REFRIG AMT 5 LB

WIRING DIAGRAM 893.05031.03
REVISION A ENCLOSURE RATING NEMA 12

Actual nameplate off of the new FFDG-Supplied Process Chiller.

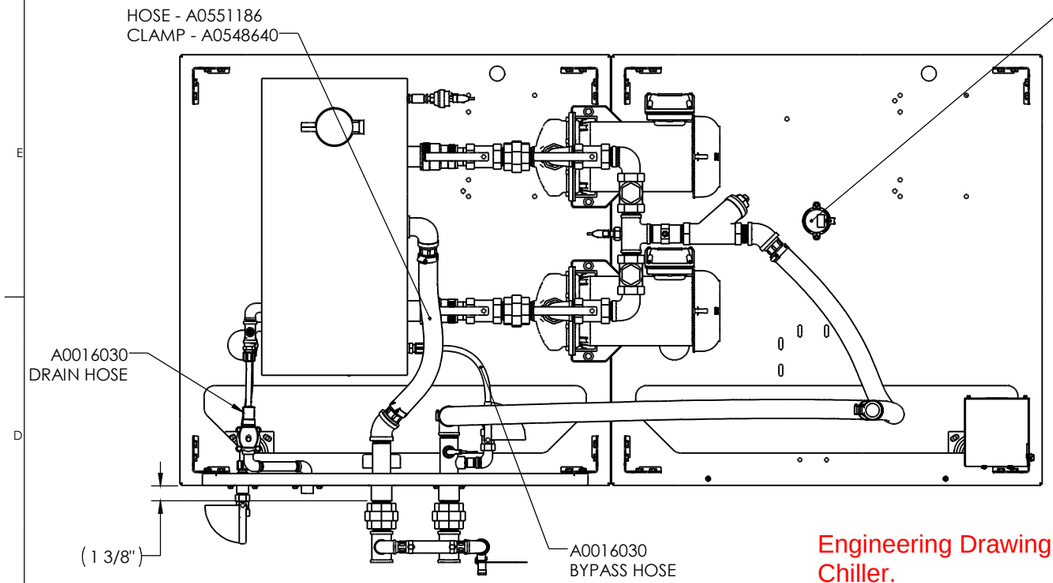

Engineering Drawings of the new FFDG-Supplied Process Chiller.

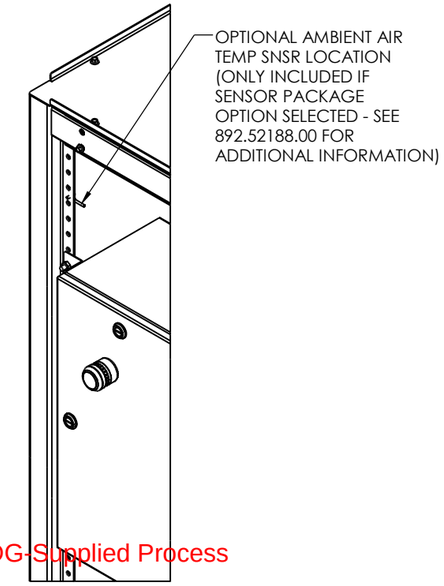

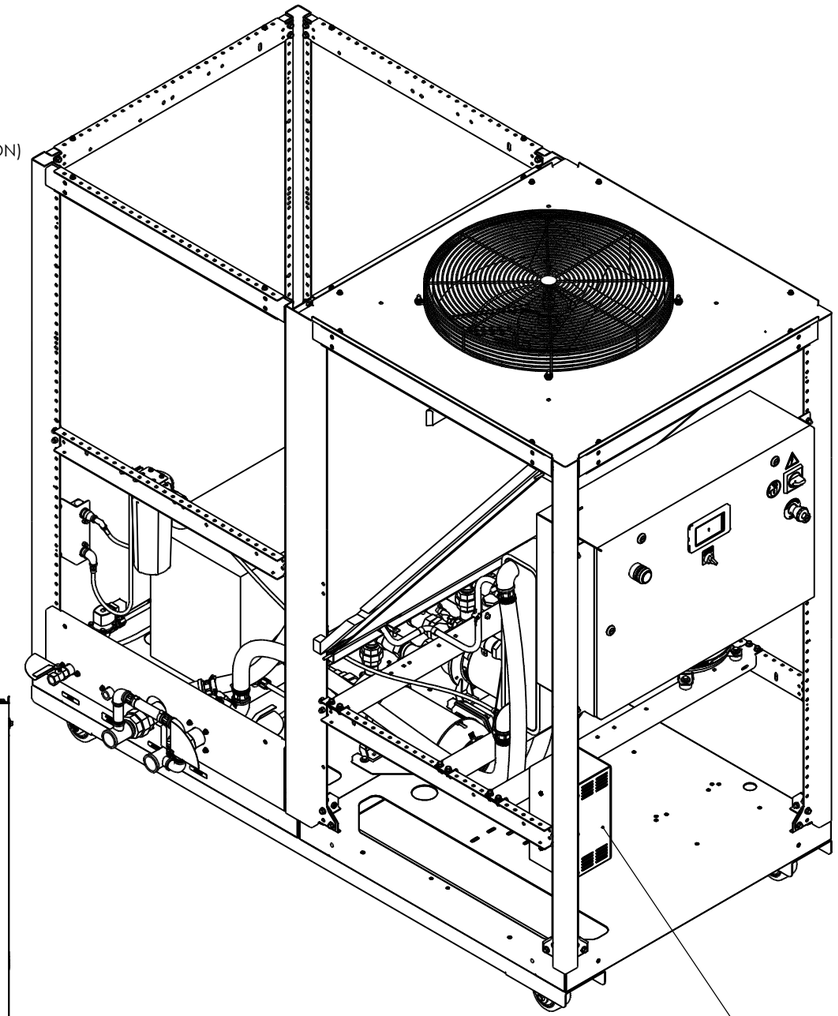

TYPICAL CONDENSER FAN MOTOR
VFD LOCATION - INDOOR UNITS ONLY
(GENERAL LOCATION SHOWN IS THE SAME FOR
ALL STYLE VFDS - ACS180 STYLE VFD SHOWN)

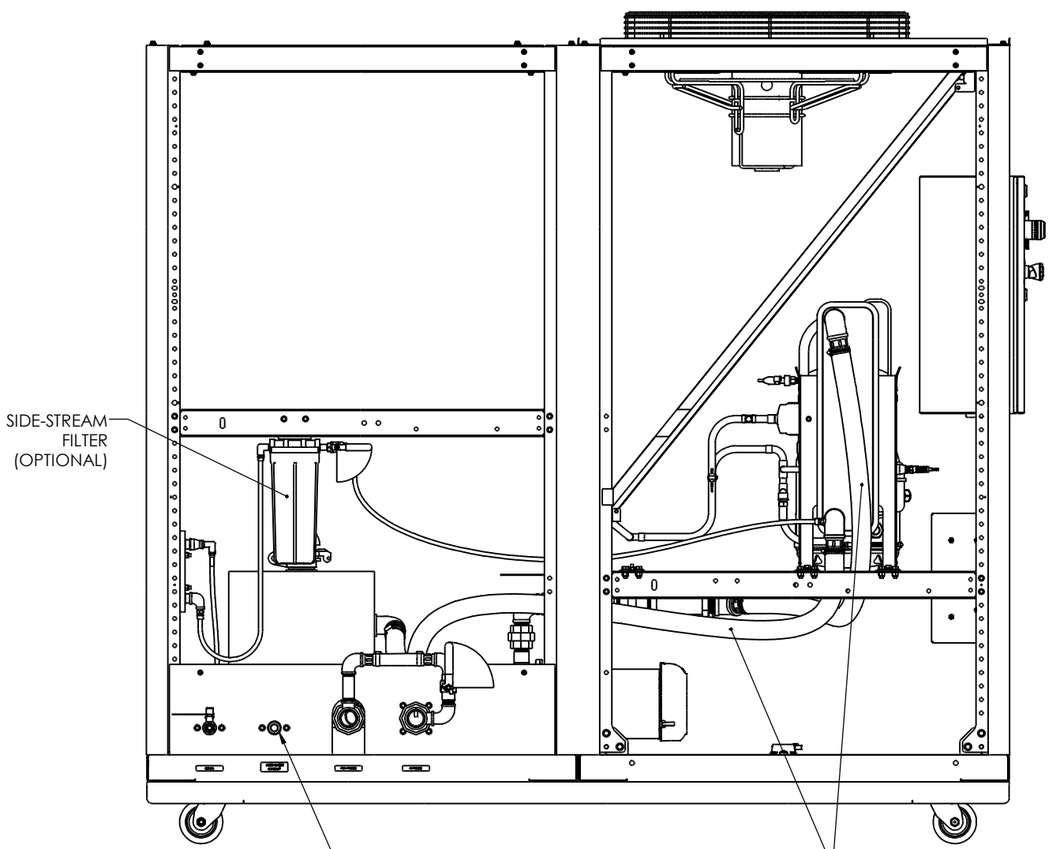

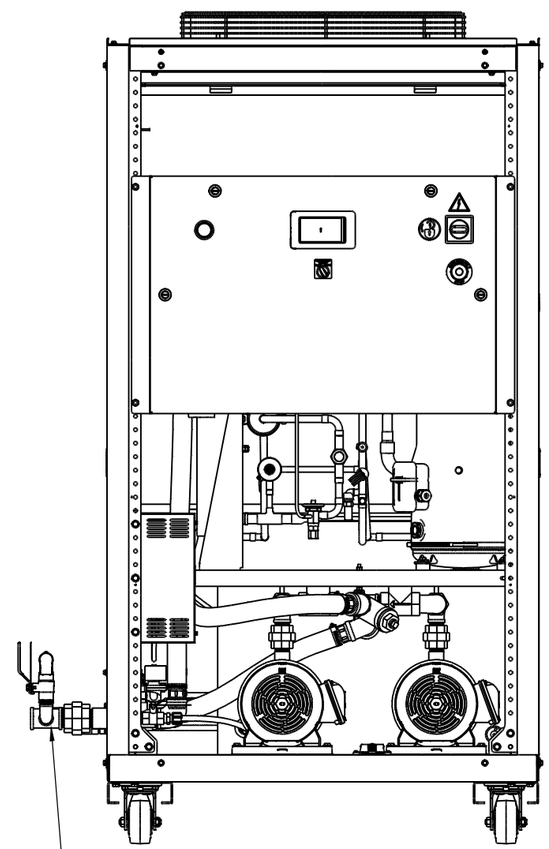

NOTE:
1. DRAWING REPRESENTS A STANDARD LAYOUT - ACTUAL UNIT MAY HAVE SLIGHT VARIANCES

REV	DESCRIPTION	ECN	NAME	DATE
A1	MOVED TANK TO ALLOW SPACE FOR PUMP UNIONS		MCM	1/8/2026

THIS DOCUMENT IS PROPRIETARY, NO DISCLOSURE, REPRODUCTION OR USE OF ANY PART THEREOF MAY BE MADE WITHOUT THE EXPRESSED WRITTEN PERMISSION OF ACS GROUP.

PART NO: 882.57007.10

	NAME	DATE
DRAWN	MCM	10/27/2025
CHECKED		
ENG APPR.		

FABRICATION TOLERANCES UNLESS OTHERWISE SPECIFIED: DIMENSIONS ARE IN INCHES

TOLERANCES:
ANGULAR DIMENSIONS ±1°
FRACTIONS ±1/16
TWO PLACE DECIMAL ±0.06
THREE PLACE DECIMAL ±0.030

PRODUCT FAMILY: Chillers
PRODUCT CATEGORY:

THIRD ANGLE PROJECTION

ACS Group®

TITLE
DWG,MA,GPL07A,
2-SECT,W/STANDBY,PMP

SHEET: 1 OF 3 | WEIGHT: . | DRAWING MAY NOT BE PRINTED TO SCALE. SCALE: 1:7 | SIZE: D | DWG NO.: 882.57007.10 | REV: A1

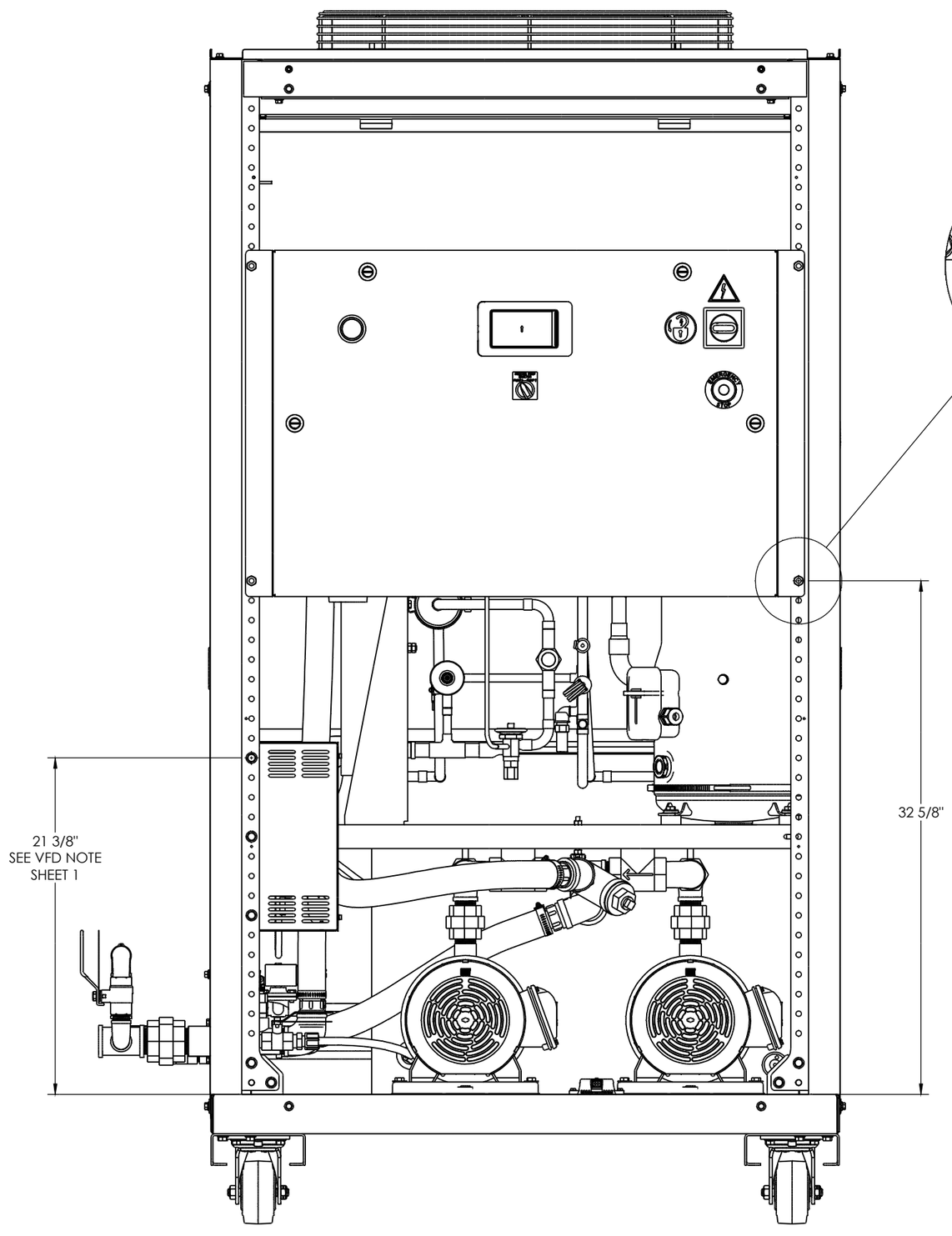

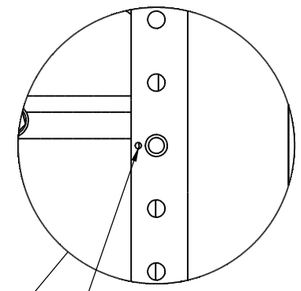

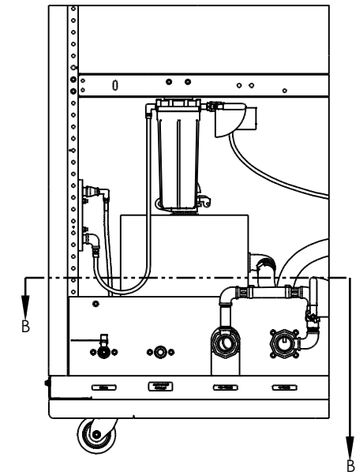

TANK LOCATION:
** DIMENSIONS ARE FROM TANK INSULATION TO INSIDE SURFACE OF VERTICAL CORNER RAIL

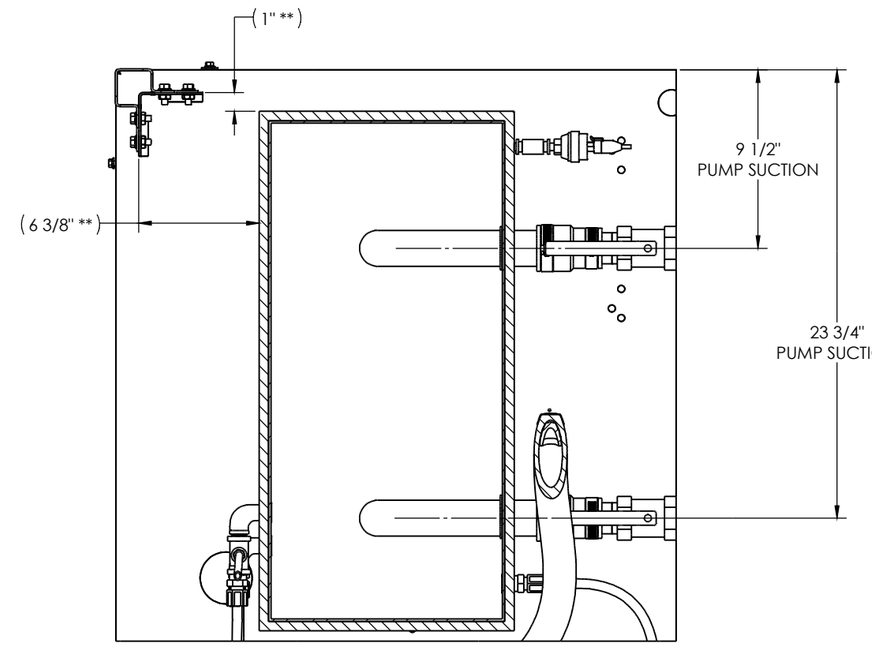

SECTION B-B

REV	DESCRIPTION	ECN	NAME	DATE
A1	MOVED TANK TO ALLOW SPACE FOR PUMP UNIONS		MCM	1/8/2026

THIS DOCUMENT IS PROPRIETARY. NO DISCLOSURE, REPRODUCTION OR USE OF ANY PART THEREOF MAY BE MADE WITHOUT THE EXPRESSED WRITTEN PERMISSION OF ACS GROUP.

PART NO: 882.57007.10

	NAME	DATE
DRAWN	MCM	10/27/2025
CHECKED		
ENG APPR.		

FABRICATION TOLERANCES UNLESS OTHERWISE SPECIFIED: DIMENSIONS ARE IN INCHES

TOLERANCES:
ANGULAR DIMENSIONS ±1°
FRACTIONS ±1/16
TWO PLACE DECIMAL ±0.06
THREE PLACE DECIMAL ±0.030

THIRD ANGLE PROJECTION

ACS Group®

PRODUCT FAMILY: Chillers

PRODUCT CATEGORY

TITLE: DWG,MA,GPL07A, 2-SECT,W/STANDBY,PMP

SHEET: 2 OF 3 | WEIGHT: . | DRAWING MAY NOT BE PRINTED TO SCALE. SCALE: 1:4 | SIZE: D | DWG NO.: 882.57007.10 | REV: A1

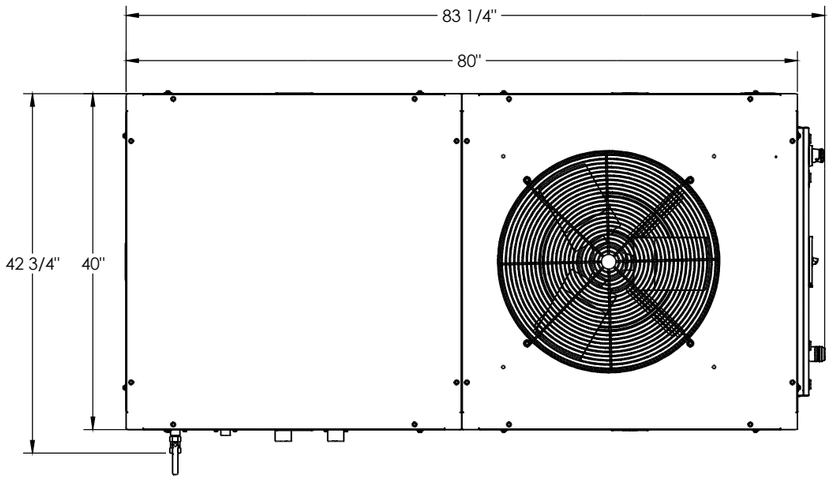

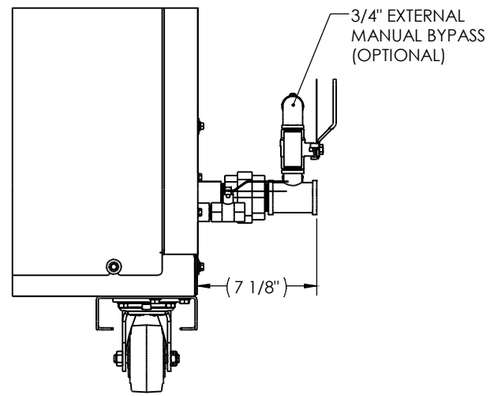

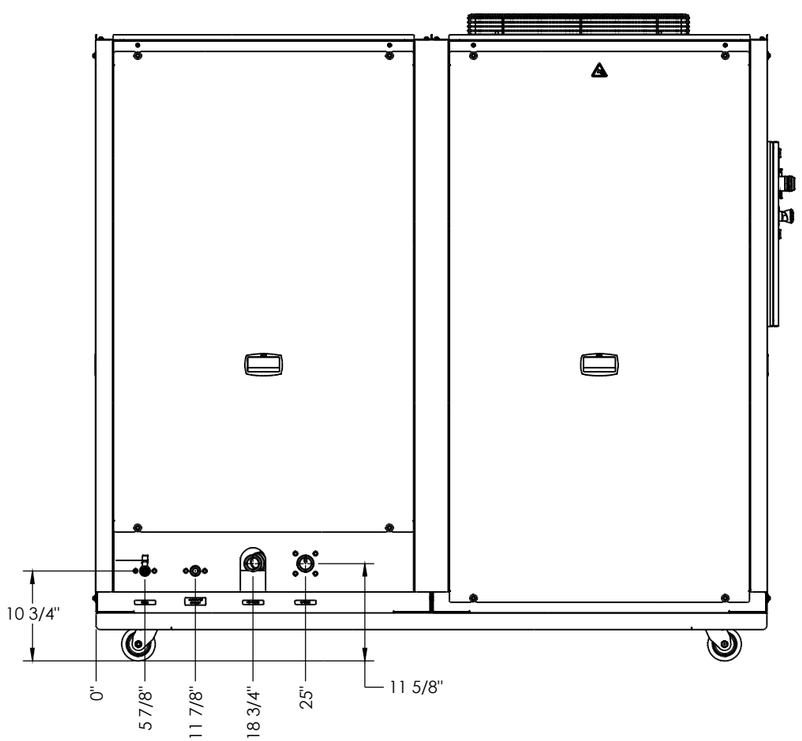

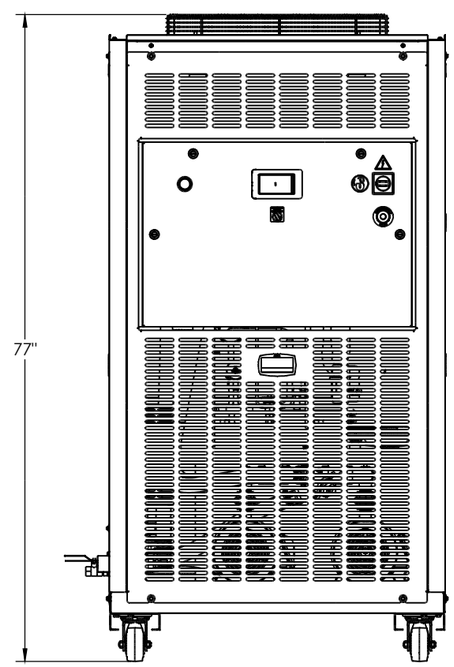

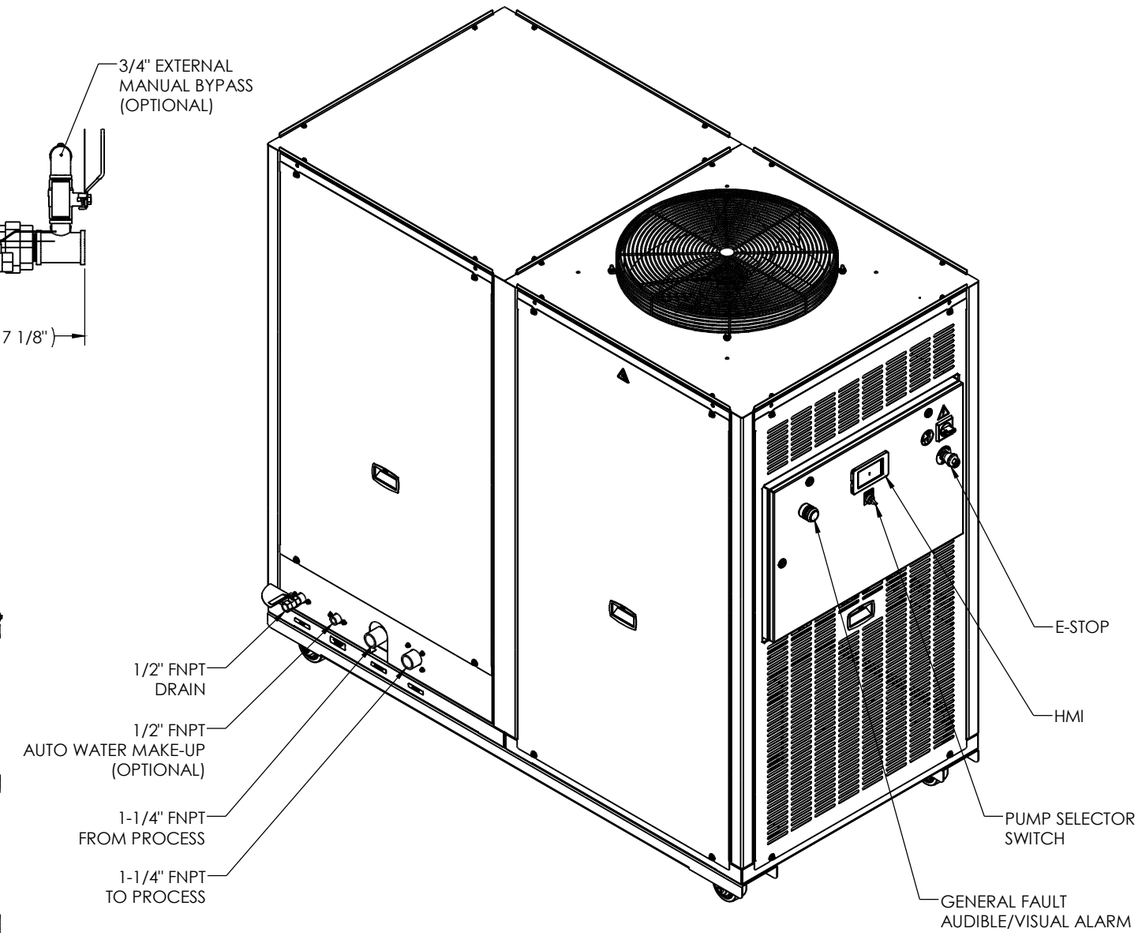

MOUNTING OPTION: CASTERS

REV	DESCRIPTION	ECN	NAME	DATE
A1	MOVED TANK TO ALLOW SPACE FOR PUMP UNIONS		MCM	1/8/2026

THIS DOCUMENT IS PROPRIETARY. NO DISCLOSURE, REPRODUCTION OR USE OF ANY PART THEREOF MAY BE MADE WITHOUT THE EXPRESSED WRITTEN PERMISSION OF ACS GROUP.

PART NO: 882.57007.10

	NAME	DATE
DRAWN	MCM	10/27/2025
CHECKED		
ENG APPR.		

FABRICATION TOLERANCES UNLESS OTHERWISE SPECIFIED: DIMENSIONS ARE IN INCHES

TOLERANCES:
ANGULAR DIMENSIONS ±1°
FRACTIONS ±1/16
TWO PLACE DECIMAL ±0.06
THREE PLACE DECIMAL ±0.030

PRODUCT FAMILY: Chillers
PRODUCT CATEGORY:

THIRD ANGLE PROJECTION

ACS Group®

TITLE: DWG,MA,GPL07A, 2-SECT,W/STANDBY,PMP

SHEET: 3 OF 3 | WEIGHT: . | DRAWING MAY NOT BE PRINTED TO SCALE. SCALE: 1:7.5 | SIZE: D | DWG NO.: 882.57007.10 | REV: A1