May 11, 2026

Design Percent Completion: 100%

Statement of Work

REPLACE CANOPY FABRIC AT SLICER PIT, F930

VANCE AIR FORCE BASE, OKLAHOMA

FACILITY PROJECT ID 1024596, WT# 18512985

PREPARED BY ZEB MCCOLLUM

INDEX

PART 1 GENERAL 2
1.01. PROJECT DESCRIPTION 2
1.02. INSTRUCTIONS TO BIDDERS 2
1.03. LOCATION OF WORK 2
1.04. SCOPE OF WORK 2
1.05. CHANGES 3
1.06. WARRANTY 3
1.07. SCHEDULE OF WORK 4
1.08. WORK RESTRICTIONS 4
1.09. CONTRACTOR'S REPRESENTATIVE 5
1.10. PROVIDED SERVICES AND UTILITIES 6
1.11. INSPECTION 7
1.12. EXCESS MATERIALS (EXCLUDING HAZARDOUS MATERIALS OR WASTE) 7
1.13. SPECIAL MATERIALS 7
1.14. MATERIALS 7
PART 2 EXECUTION 9
2.01. SITE SAFETY REQUIREMENTS 9
2.02. INSTALLATION 9
PART 3 SITE INFORMATION 10
PART 4 APPENDICES 11
4.01. APPENDIX A – SITE PHOTOS 11
4.02. APPENDIX B – BID FORM 11
4.03. APPENDIX C – DRAWINGS 11

PART 1 GENERAL

1.01. PROJECT DESCRIPTION

A. The work covered under this Statement of Work shall consist of furnishing and installing Flame Retardant (FR) canopy fabric and any incidental work necessary to provide a complete and usable finished product.

1.02. INSTRUCTIONS TO BIDDERS

A. As part of the bid package the Contractor shall submit a completed copy of *APPENDIX B – BID FORM*, along with all required documentation as stated in Sam.gov.

B. Owner reserves the right to reject any bid which does not completely satisfy the Statement of Work.

1.03. LOCATION OF WORK

A. Location of work to be accomplished under this statement of work is at Vance Air Force Base (AFB). Vance AFB is located three miles south of the City of Enid, Oklahoma. F930 is located south of the intersection of Elam Road and Goad Street.

1.04. SCOPE OF WORK

A. The Contractor shall furnish all supervision, labor, equipment, consumable materials, supplies, tools, and other items to complete the construction as listed in the Scope of Work. All quotes shall include all shipping charges for completion of the project. The contractor will coordinate all work with *ASRC Federal* Construction Management prior to execution. The list of items below are to be considered the general Scope of Work for the project.

B. The Contractor shall field verify location of work, dimensions, and existing site conditions prior to commencing work. The Contractor shall contact ASRC Construction Management for any discrepancies with the Scope of Work.

C. Additional details are described below:

1. <u>REMOVE AND REPLACE:</u>

    a. Existing damaged canopy fabric and damaged hardware with new FR canopy fabric, ratchet mechanisms, ratchet straps, straps, cables, and fasteners.

        1. Basis of Design – Refer to *Appendix C – DRAWINGS*

2. Dimensions

    a. *Structure Length: 60-feet*

    b. *Structure Width: 40-feet*

    c. *Canopy Fabric Square Footage with Arc Length (width) 4,110-square-feet (approximate)*

D. The Contractor shall always maintain clean areas free of clutter and debris during construction. After the work is completed, clean site to preconstruction conditions, or better.

E. Protection of Government Property

Take special care to protect Government property. Return areas damaged as a result of construction under this contract to their original condition. In addition to FAR 52.236-9, Protection of existing vegetation, structures, equipment, utilities, and improvements, perform the following:

1. Remove or alter existing work or facilities in such a manner as to prevent injury or damage to any portion of the existing work or facilities to remain.
2. Repair or replace portions of existing work altered during construction operations to match existing or adjoining work, as approved by ASRC Construction Management. At the completion of operations, existing work must be in a condition equal or better than that which existed before any new work started.

1.05. CHANGES

A. No oral statement by any person other than the Contracting Officer as provided in the Federal Acquisition Regulation (FAR) will in any manner or degree modify or otherwise affect the terms of this contract.

1.06. WARRANTY

A. The Contractor shall provide a standard 1-year Warranty for all labor and material from date of the base's acceptance of completion in accordance with Federal Acquisition Regulation (FAR) clause 52.246-21. For warranted items furnish the Manufacturer's original warranty accompanied by a copy of the supplier's receipt showing place of purchase, telephone number of supplier, address, delivery order if applicable and ticket number.

1.07. SCHEDULE OF WORK

A. The Contractor shall be responsible for establishing a schedule to meet construction time.

B. The Contractor shall submit a schedule of all project work in advance to ASRC Construction Management indicating all work activities including required interruptions of utilities, facilities activities, or traffic flow.

C. The Contractor shall complete work on this contract such that interferences to necessary activities within and adjacent to the construction site are minimized and all Government property and personnel are always protected from incidental damage.

D. The Contractor shall coordinate work of all trades to prevent any conflicts. The Contractor shall resolve any conflicts of components before proceeding with construction.

E. The Contractor shall submit a Schedule of Values to ASRC Construction Management for approval. Schedule of Values to be provided on AIA G702 or similar.

1.08. WORK RESTRICTIONS

A. EXISTING UNDERGROUND UTILITIES

Any underground utilities within the work areas will initially be located and identified with paint markings on the surface by Vance AFB personnel. The Contractor shall maintain all utility markings, after base personnel have located them, for the duration of the contract. The Contractor shall obtain an approved Air Force Form 103, BASE CIVIL ENGINEERING WORK CLEARANCE REQUEST before beginning any underground work. ***The Contractor shall notify ASRC Construction Management at least two weeks in advance of desired commencement of work.*** The Contractor is responsible for repairing any utilities damaged during construction.

B. WORK HOURS, ACCESS, AND PASSES

All Contractor employees, including subcontractors, subcontractors' employees, suppliers, and suppliers' employees are required to comply with the Installation Security Requirements regarding personnel, vehicle, and equipment security passes and access to the jobsite. Nothing in the contract is to be construed in any way to limit the authority of the Commanding Officer to prescribe new, or to enforce existing security regulations governing the admission or exclusion of persons and the conduct of persons while on VAFB, including but not limited to, the rights of search of all persons or vehicles on the Installation.

1. Access to Buildings / Occupied Buildings: The Contractor may work in or around existing occupied buildings. The Contractor is responsible, via the ASRC Construction Management, to obtain access to building and facilities and arrange for them to be opened and closed. Do not enter the building(s) without prior approval of the ASRC Construction Management. Keep the existing buildings and their contents secure at all times. Provide temporary closures as required to maintain security.

2. Passes: Contractor employees and representatives performing work under this contract are required to be either United States citizens or documented legal residents (status verified by prime contractor) and have a Real ID driver's license. All Contractor employees must obtain the required passes. Failure to obtain security and base access passes must not be a cause for contract performance time extension. The Contractor is required to immediately turn in all terminated employee's passes to the issuing office.

3. Contractor Vehicles: All vehicles must display a valid state license plate and safety inspection sticker, if applicable, and must be maintained in good condition. The company name must be displayed in a clearly visible manner and size on each Contractor vehicle used in the course of work. Registration, proof of insurance and driver's licenses are required to obtain a station vehicle pass.

4. Work Hours: Normal working hours are from 7:30 a.m. to 4:30 p.m., Monday through Friday. Night, Weekend (Saturday and Sunday) and Federal Holiday work will be subject to approval by the ASRC Construction Management. *The Contractor must provide a written request of their intention to work outside of normal working hours to ASRC Construction Management at least 48 hours in advance of the specified time.*

    a. The Contractor shall perform all work during normal working hours except as otherwise approved to accommodate agreed upon "shutdowns" and other required "after hours" work. At no time will any facility have their services or utilities disrupted during normal working hours without prior approval from the ASRC Construction Management.

5. Contractor employees must conduct themselves in a proper, efficient, courteous, and businesslike manner. Remove from the site any individual whose continued employment is deemed by the ASRC Construction Management to be contrary to the public interest or inconsistent with the best interests of National Security.

1.09. CONTRACTOR'S REPRESENTATIVE

A. Superintendent: A representative of the Contractor shall directly supervise accomplishment of this work. The representative will be responsible for coordinating all phases of work with the ASRC Construction Management. The representative shall always be on the job site when work is being performed and shall have authority to execute no cost field changes on behalf of the Contractor if agreed to by all parties involved.

   1. Qualifications: Must have a minimum of 3 years of experience as a Superintendent on previous projects of similar size and complexity. Provide a Superintendent Resume for the proposed on-site Project Superintendent describing experience with references and qualifications to ASRC Construction Management for approval. ASRC Construction Management reserves the right to interview the proposed on-site Project Superintendent at any time in order to verify the submitted qualifications.

B. Quality Control (QC): A representative of the Contractor responsible for all quality control of the job site and will be held responsible by the ASRC Construction Management for the removal and installation of all products in accordance with the statement of work. The representative shall be competent and familiar with all phases of work under their authority.

   1. Qualifications: Must have a minimum of 2 years combined experience as a Superintendent, Inspector, QC manager, Project manager, or Construction Manager on similar size and type construction contracts which included major trades included in this statement of work. The individual must be familiar with the requirements of EM 385-1-1 and have experience in the areas of hazard identification and safety compliance.

C. A single representative of the Contractor for supervising the project, ensuring quality control (QC) and site safety is permitted provided that the representative is competent and familiar with all phases of work under their authority, and it is qualified to perform these duties.

D. Contractor Personnel: Provide ASRC Construction Management the name(s) of the supervisory person(s) authorized to act for the Contractor. Provide, and update as required, a list of the key personnel for the Contractor and Subcontractors including addresses and telephone numbers (main and cell) for use in the event of an emergency.

1.10. PROVIDED SERVICES AND UTILITIES

A. All reasonable required amounts of electric power will be made available to the Contractor at the discretion of ASRC Construction Management from the nearest suitable and available connection.

B. All reasonable required amounts of water will be made available to the Contractor at the discretion of ASRC Construction Management.

C. The Contractor shall be required to provide their own latrines that are staked down to prevent being turned over.

1.11. INSPECTION

A. The work shall be conducted in accordance with the Statement of Work and is subject to the inspection of the ASRC Construction Management and Government Representative to ensure strict compliance with the terms of the statement of work.

1.12. EXCESS MATERIALS (EXCLUDING HAZARDOUS MATERIALS OR WASTE)

A. All waste materials resulting from execution of work shall become the property of the Contractor. The Contractor shall haul all non-hazardous waste off Vance AFB and dispose of it in a legal manner.

B. The Contractor shall be required to control all foreign objects debris (FOD) from exiting the job site at all times.

C. At no time shall the Contractor dispose of any recyclable materials in the landfill. All recyclable material shall be taken to an approved recycling center at no cost to the government.

D. The Contractor shall submit tonnage of waste and recycled material to ASRC Construction Management at project completion.

1.13. SPECIAL MATERIALS

A. Prohibited Material: The manufacturer of materials to be used shall certify the products do not contain mercury, toluene, chlorinated solvents, hydrolysable chlorine derivatives, ethylene base glycol ethers and their acetates, nor any carcinogen, as defined in 29 CFR 1910.1200. Materials used shall not contain lead and hexavalent chromium compounds.

B. At no time shall class 1 Ozone Depleting Chemical (ODC's) be specified and shall not be used unless otherwise allowed by ASRC Construction Management.

1.14. MATERIALS

A. All materials must meet the Buy American Act.

B. Material Submittals:

1. Copies of all materials and shop drawings are to be submitted to ASRC Construction Management and must be approved prior to purchasing any items.

2. All hazardous chemicals used on the project are required to have Safety Data Sheets (SDS) approved by the Vance Environmental Office prior to transport to the installation.

3. All hazardous waste generated by the project shall become the property of Vance AFB for legal disposal.

4. The Contractor shall use the Short-Term Hazardous Material Inventory and Usage Report Form to get Hazardous Materials authorized for use inside the fence.

C. List of Materials

1. Refer to Section 1.04 Scope of Work, within this Statement of Work

2. *Refer to Appendix C – Drawings*

D. Material Delivery: The Contractor shall have all materials delivered during normal working hours and will have a representative present to receive shipments. The Contractor shall ensure all delivery vehicles have sufficient project information and are prepared to undergo inspection upon entering the Installation. This includes name and address of the project site, name of prime contractor and a point of contact for delivery. Material will be delivered to a location for staging as approved by ASRC Construction Management.

PART 2 EXECUTION

2.01. SITE SAFETY REQUIREMENTS

A. All work shall be done in compliance with the safety standards as defined in DAFMAN 91-203, Air Force Occupational Safety, Fire, and Health Standards.

B. The Contractor shall comply with all applicable standards and provisions of the Occupational Safety and Health Act (OSHA) (29 CFR OSHA 1926).

C. The Contractor shall take all necessary and prudent safety precautions to ensure safety of the workforce and other exposed personnel.

D. The Contractor shall coordinate all requests for entry to the airfield or Air Force control/restricted areas through ASRC Construction Management.

2.02. INSTALLATION

A. Project Duration:

1. The total period of performance is 55 calendar days as described below.

    a. Non-Performance Period: The Contractor shall have up to 45 calendar days of nonperformance for mobilization and material lead time. If material lead time exceeds this number of days, the nonperformance period may be extended with coordination of the ASRC Construction Management and approval by Contracting Officer.

    b. Performance Period: All work shall be completed within 10 calendar days after obtaining a Notice to Proceed from the Contracting Officer.

B. Installation shall include all items listed in this statement of work, and any incidental work necessary to provide a complete and usable finished product.

C. Contractor shall remove equipment and material from the site upon completion of work as directed by ASRC Construction Management.

PART 3 SITE INFORMATION

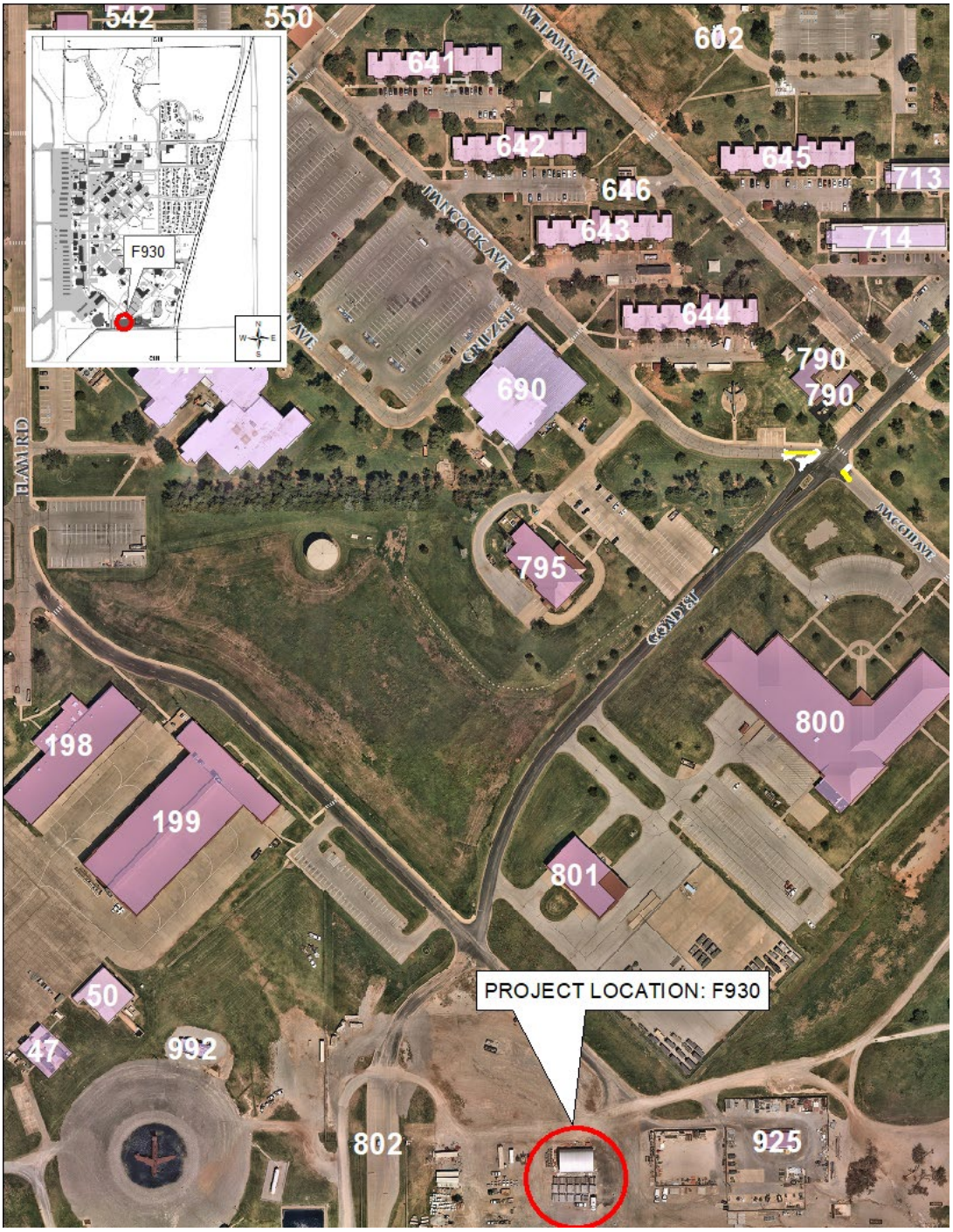

Figure 1: Project Location

PART 4 APPENDICES

4.01. APPENDIX A – SITE PHOTOS

4.02. APPENDIX B – BID FORM

4.03. APPENDIX C – DRAWINGS

END OF STATEMENT OF WORK

APPENDIX A – SITE PHOTOS

400 Young Road
Vance AFB, OK 73705
580.213.7174

APPENDIX A – SITE PHOTOS

Figure 2: Damaged Canopy

Figure 3: Damaged Canopy

Figure 4: Metal Frame

Figure 5: Cable Connection on Plate

Figure 6: Cable Ratchet

Figure 7: Strap Ratchet

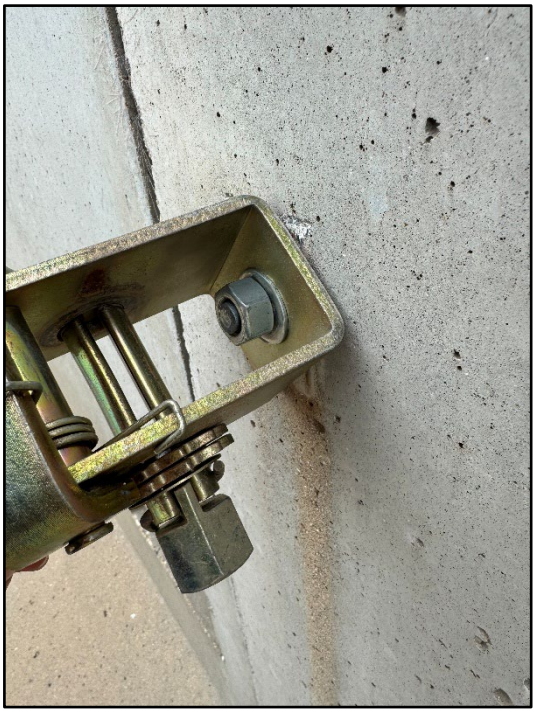

Figure 8: Strap Ratchet Close-Up

Figure 9: Strap Ratchet Close-Up

Figure 10: Strap Ratchet Close-Up

Figure 11: Strap Ratchet Row

Figure 12: Frame Cable Tie-Down

Figure 13: Frame Cable Tie-Down

400 Young Road
Vance AFB, OK 73705
580.213.7174

APPENDIX B – BID FORM

400 Young Road
Vance AFB, OK 73705
580.213.7174

APPENDIX B - BID FORM

Fac. Proj. ID: FP1024596, WT# 18512985
Proj. Name: REPLACE CANOPY FABRIC - COMEPLETE-IN-PLACE - F930

ITEM	DESCRIPTION	UNIT	QTY	UNIT PRICE	TOTAL
Base Bid					
1	REPLACE CANOPY FABRIC	LS	1		$ -
2	Total Cost Base Bid				$ -

Contractor's Name _____ Date _____

Contractor's Signature _____

Address:

_____

_____

_____

Phone Number: _____

E-mail address: _____

APPENDIX C – DRAWINGS

FABRENE®

INDUSTRIAL SYNTHETIC FABRICS

TYPE P708WW

Made from high density polyethylene tapes, coated on two sides with low density polyethylene and FR additives.

PROPERTY	UNIT		VALUES	TEST METHOD
Unit Weight	oz/yd2		12.6	ASTM D3776
Warp Construction	Tapes/in	Warp	16	ASTM D3775
		Weft	16	
Tensile Grab Strength	lbf	Warp	408	ASTM D751
		Weft	452	
Tear Strength * (tongue)	lbf	Warp	96	ASTM D2261
		Weft	109	
Tear Strength (trapezoid)	lbf	Warp	83	ASTM D4533
		Weft	106	
Coating	mil	White	3.9	ASTM D1777 MOD
	mil	White	3.9	
Low Temperature Bend	-131ºF		Pass	ASTM D2136
Flammability		FSC1 - 5 SD - 30		ASTM E84-94
Flammability		FSC1 - 20 SD - 135		CAN/ULC-S102
Flammability			PASS	UBC Standard 31-1
Flammability			PASS	NFPA 701 L
Flammability			PASS	CAN/ULC-S109-M87 L
Flammability California fire marshall			PASS	CAC Title 19 par.1237.1
Light Transmission	%		18	
Thickness	mil		24	Caliper

*** Includes force to shift tapes - Tear may be crosswise to direction of force.**

Fabrene® P708 contains ultraviolet inhibitors making it suitable for outdoor applications.
For further information, contact your FABRENE Inc. representative.
.

Suggested Applications: Shelter fabric, Heavy tarpaulins where fire resistance to NFPA 701L and/or CAN/ULC S109-M87 standards are required.

NOTE: These values are typical data and are not intended as limiting specifications.

Date: 07/06/22

SALES INQUIRIES

Fabrene Inc.
Tel: (888) 322-7363 ext 234
Tel: (705) 476-7057 ext 234
Fax: (705) 476-7787

ORDER DESK

North Bay, ON, Canada
Tel: (888) FABRENE
(888) 322-7363
ext. 222 or 226
Fax: (705) 476-0665

MAILING ADDRESS

Fabrene Inc.
240 Dupont Rd.
P.O. Box 4040
North Bay, ON, Canada
P1B 9B4

ISO 9001:2000
CGSB Registered
Certificate 93610

Name:		40' HIGH PROFILE	THIS DOCUMENT CONTAINS INFORMATION PROPRIETARY TO ACCU-STEEL INC. IT SHALL NOT BE REPRODUCED, USED, OR DISCLOSED WITHOUT PRIOR WRITTEN PERMISSION OF ACCU-STEEL INC.
Location:		ADVANTAGE TRUSS	
Email:		Notes:	Date: 12/30/2011
Phone:	Cell:		Project:
Fax:	Cover: HL13 MONO		Drawn By: JCB
Length: Centers:	Arc: 68'-6"		Sales #
Rafter Coating: ASTM-A123 Hot Dip Galvanized 3.9 mils Zinc			
Foundation:			

Accu-Steel
FABRIC COVERED BUILDING SOLUTIONS
1-877-338-6936
www.asicoverbuildings.com
sales@asicoverbuildings.com

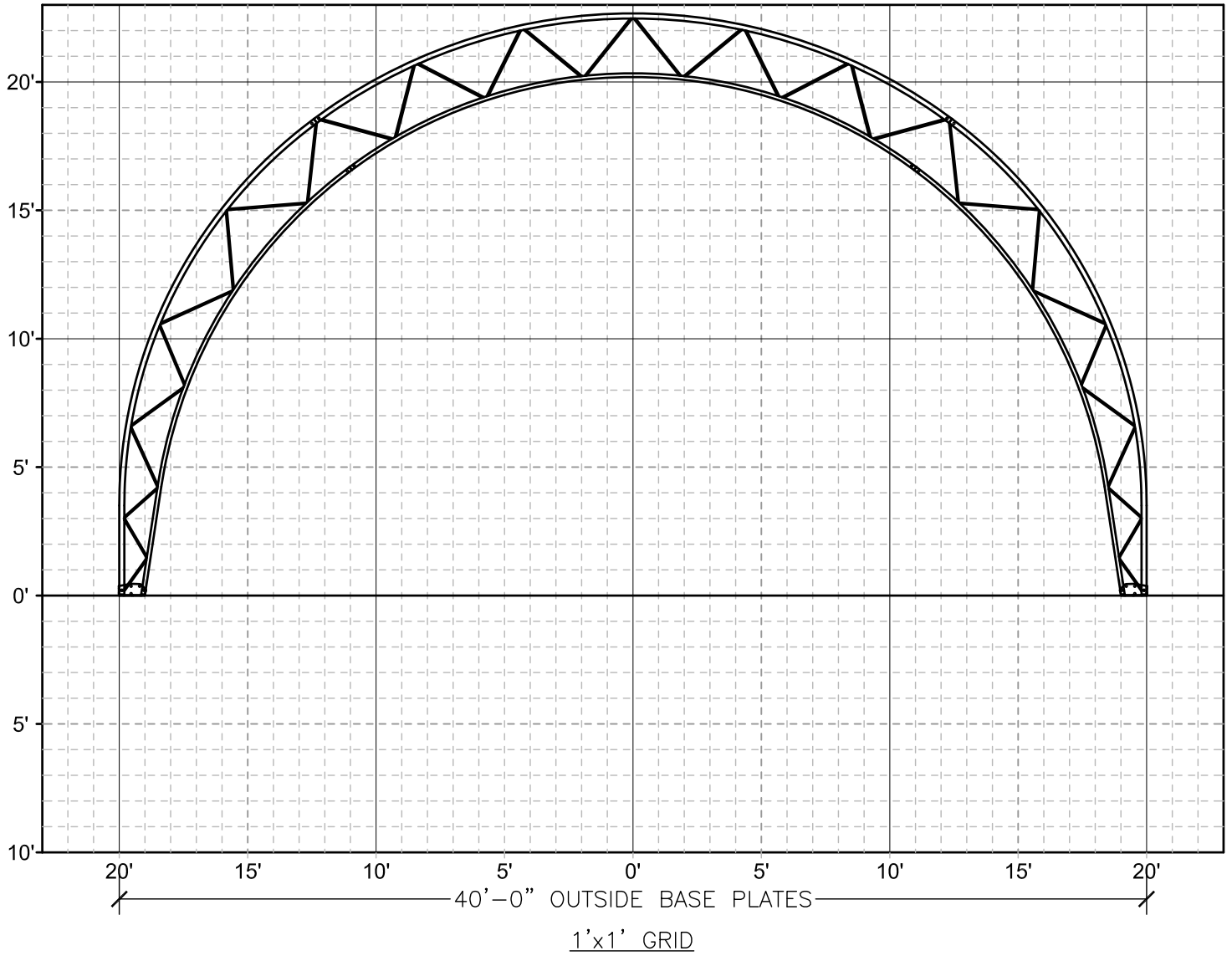

ADVANTAGE SERIES

INSTALLATION PLANS
DRAWING SCHEDULE

SCHEDULE OF DRAWINGS

SHEET NO.	DESCRIPTION
IP–TITLE	GENERIC TITLE SHEET
IP–01	SPECIFIC BUILDING INFORMATION
IP–02	SPECIFIC TOP VIEW
IP–03	GENERIC CONNECTION DETAILS
IP–04	GENERIC ASSEMBLY DETAILS
IP–(BLD WIDTH)A–E	GENERIC END VIEWS
CP–01W/G	GENERIC MAIN COVER ATTACHMENT
CP–02W/G	GENERIC SOLID END COVER ATTACHMENT
CP–032W/G	GENERIC DOOR END COVER ATTACHMENT
CP–04A–D	GENERIC GATHER/WALK DOOR VIEWS & ATTACHMENT

NOTE: FOUNDATION ANCHORS ARE NOT PROVIDED FOR ANY AND ALL BUILDING COMPONENTS WITH ACCU–STEEL BUILDING KITS. FOUNDATION ANCHORS MAY BE PROVIDED BY ACCU–STEEL IF PREVIOUS ARRANGEMENTS ARE MADE.

THIS DOCUMENT CONTAINS INFORMATION PROPRIETARY TO ACCU-STEEL INC. IT SHALL NOT BE REPRODUCED, USED, OR DISCLOSED WITHOUT PRIOR WRITTEN PERMISSION OF ACCU-STEEL INC.

Rev.	Date:	Description:

ACCU-STEEL FABRIC COVERED BUILDING SOLUTIONS
1-877-336-6936
P.O. BOX 201
TEMPLETON, IA 51463

Project Name:
Project Location:
Building Description:
Date:
Building Design Code & Loads:

Date: 01/02/2011
Drawn By: JCB
CAD filename:
Job Number:
Bldg. Number:
Dwg. Number:

IP-TITLE

J:\JARED TRANSFER 8_12_2011\DRAFTING - TECH SALES\6 DRAFTING TOOLS\GENERIC INSTALL CAD\GENERIC.DWG

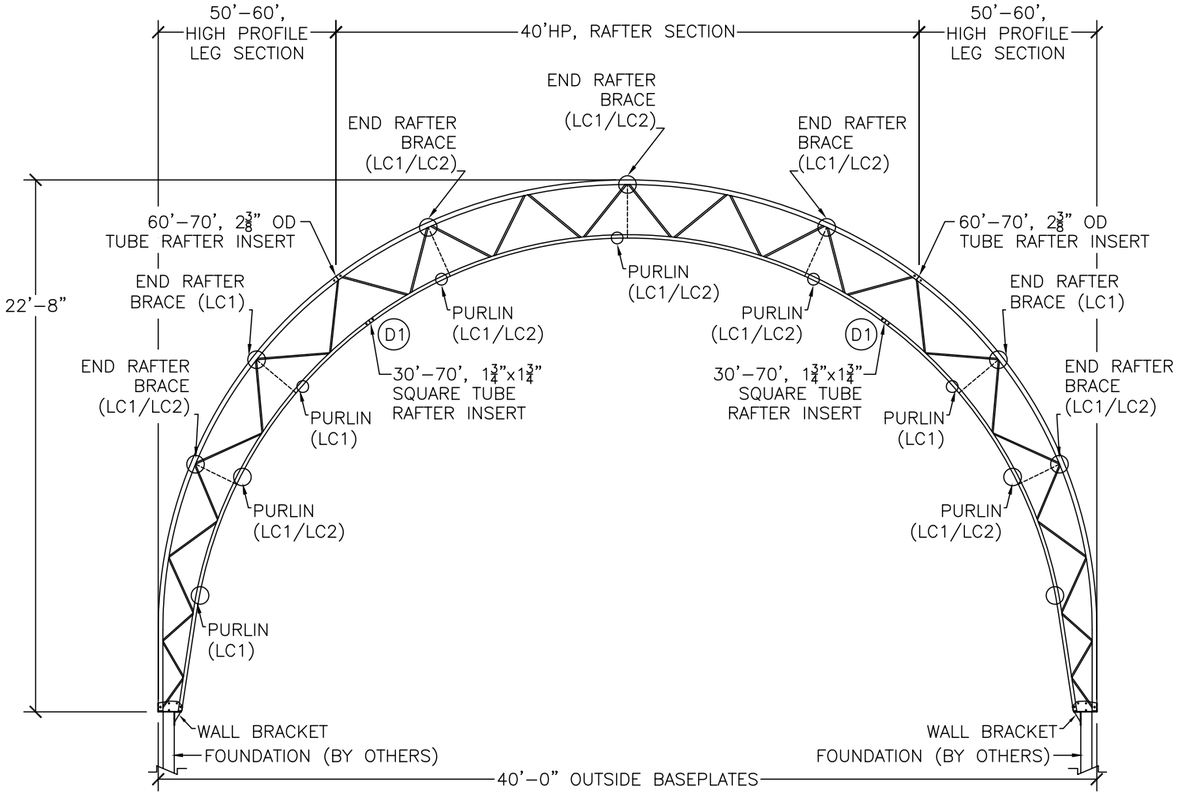

SECTION VIEW

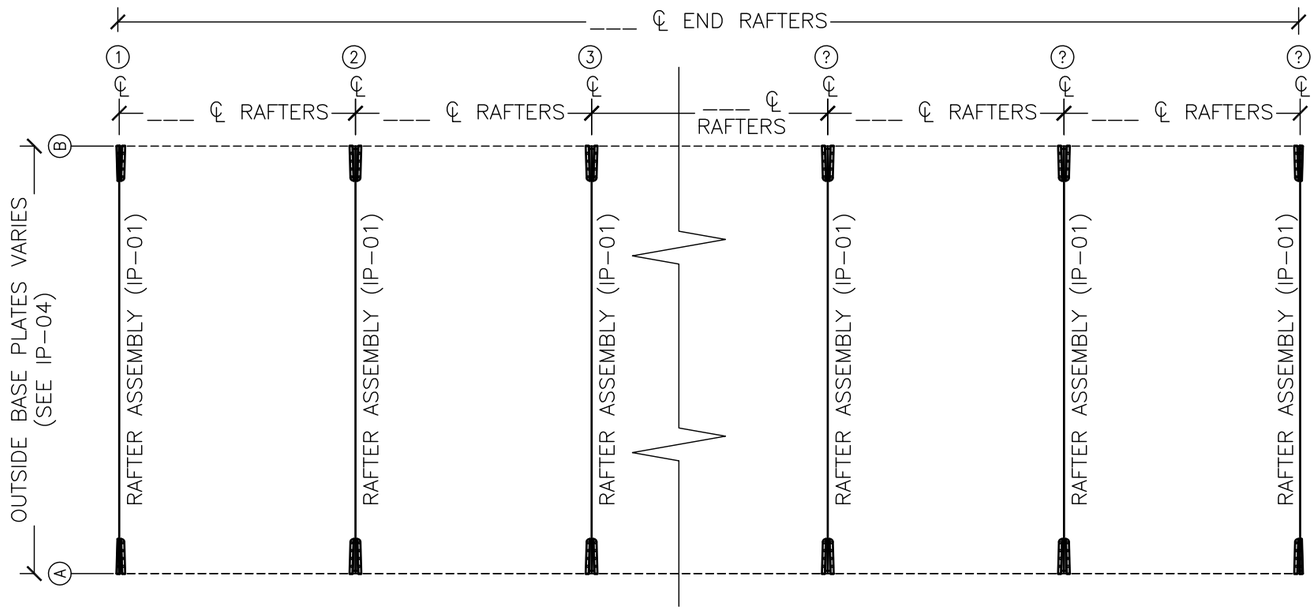

RAFTER ASSEMBLY

BASEPLATE LAYOUT

PROJECT SPECIFIC BUILDING INFORMATION

Building Width	
Rafter Centers	
Windload (MPH)	
Snow load (GSL)	
Windload IF	
Snow load IF	

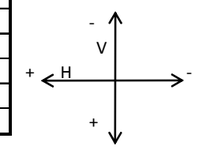

*Reactions are in Kips

**Windload can act in opposite direction

	A		B	
	H	V	H	V
1) DL+SL (BALANCED)				
2) DL+SL (UNBALANCED)				
3) DL+0.75WL (POS)+SL (BALANCED)				
4) DL+0.75WL (NEG)+SL (BALANCED)				
5) DL+0.75WL (POS)+SL (UNBALANCED)				
6) DL+0.75WL (NEG)+SL (UNBALANCED)				
7) DL+WL (POS)				
8) DL+WL (NEG)				
9) 0.6DL+WL (POS)				
10) 0.6DL+WL (NEG)				
11) DL				
12) SL (BALANCED)				
13) SL (UNBALANCED)				
14) WL (POS)				
15) WL (NEG)				

REACTION NOTES:

1. THE VERTICAL (V) AND HORIZONTAL (H AND Z) REACTION ARE STATED IN KIPS. (1 KIP = 1000 POUNDS) POSITIVE DIRECTION IS AS SHOWN IN THE FOLLOWING DIAGRAM.

2. MOMENT REACTIONS ARE STATED IN INCH–KIPS AND ARE POSITIVE IN A COUNTERCLOCKWISE DIRECTION.

3. THE FORCE ON THE ANCHOR BOLTS OR FOUNDATION WILL BE IN THE OPPOSITE DIRECTION TO THAT SHOWN.

4. MAXIMUM REACTION SUMMARY IS THE MAXIMUM POSITIVE AND NEGATIVE REACTIONS BASED ON THE REQUIRED LOAD COMBINATIONS.

5. THE WIND LOAD BRACING REACTIONS DO NOT INCLUDE EWP, EWS AND IP REACTIONS FROM THE INTERMEDIATE FRAME. THESE REACTIONS SHOULD BE ADDED TO GET THE TOTAL REACTIONS FOR THE FOUNDATION DESIGN.

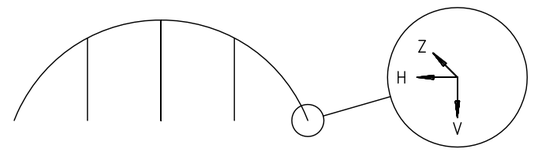

SNOWLOAD REQ'D:_____ PROJECT NAME:_____

WINDLOAD REQ'D:_____ BUILDING LENGTH:_____

IMPORTANCE FACTOR:_____ RAFTER CENTERS:_____

THIS DOCUMENT CONTAINS INFORMATION PROPRIETARY TO ACCU-STEEL INC. IT SHALL NOT BE REPRODUCED, USED, OR DISCLOSED WITHOUT PRIOR WRITTEN PERMISSION OF ACCU-STEEL INC.

Rev.	Date:	Description:

Accu-Steel FABRIC COVERED BUILDING SOLUTIONS
1-877-338-6936
P.O. BOX 201
TEMPLETON, IA 51463

Project Name:
Project Location:
Building Description:
Date:
Building Design Code & Loads:

Date: 01/02/2011
Drawn By: JCB
CAD filename:
Job Number:
Bldg. Number:
Dwg. Number:

IP-01

J:\SHARED TRANSFER 8-12-2011\DRAFTING - TECH SALES\5. DRAFTING TOOLS\GENERIC INSTALL CAD\GENERIC.DWG

40' & 40'HP BUILDING
CABLE LAYOUT

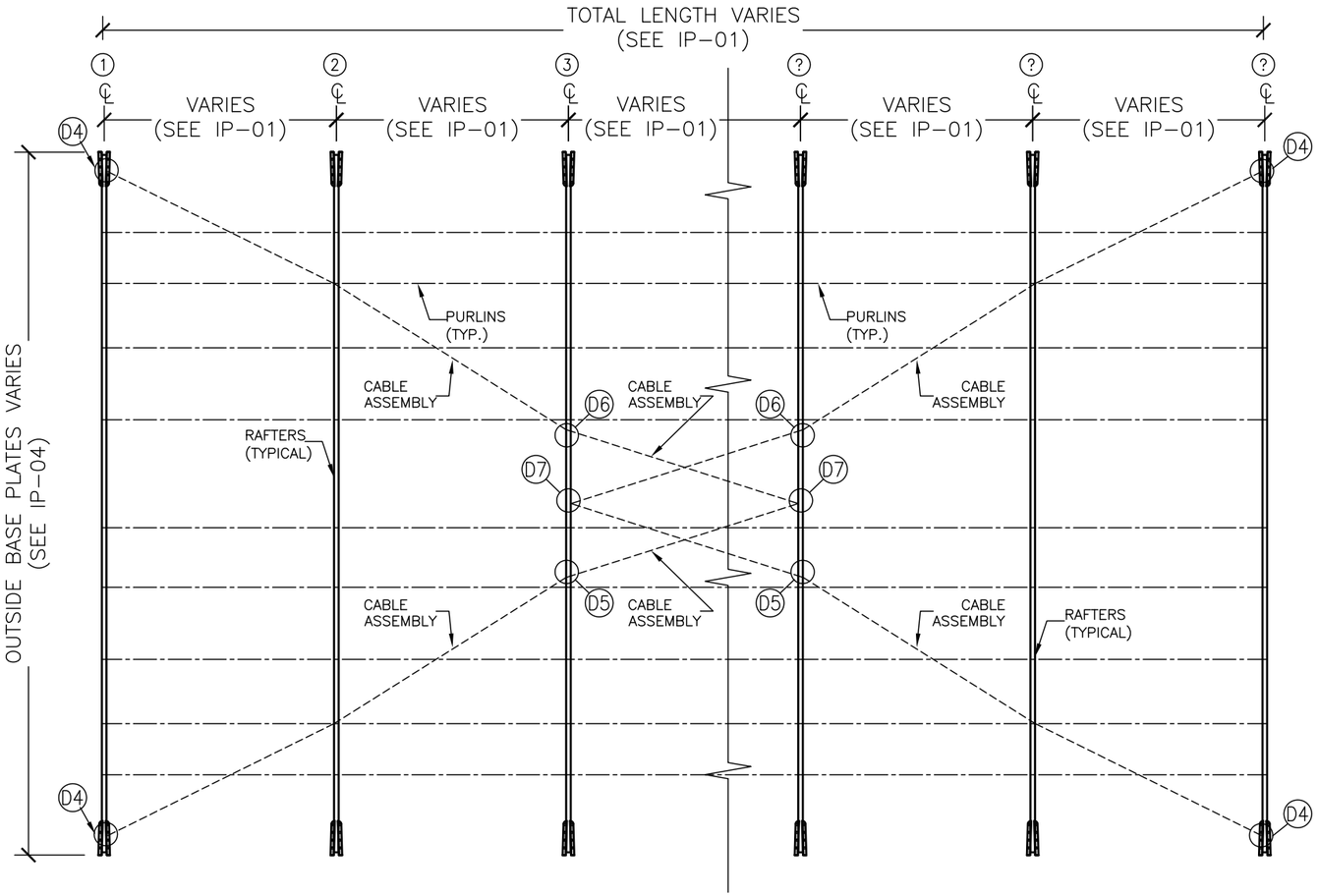

NOTE: ALL CABLES TO GO OVER TOP OF PURLINS AND THRU RAFTERS

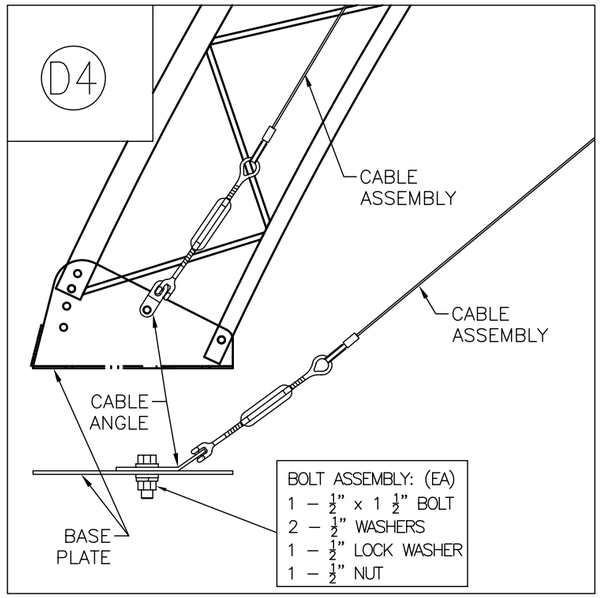

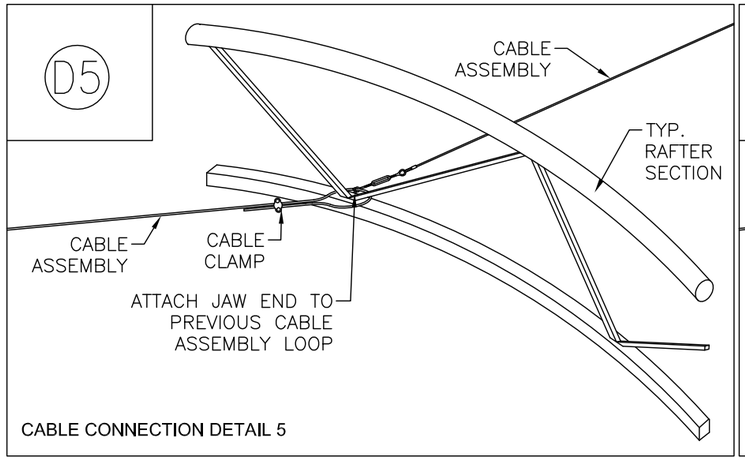

CABLE CONNECTION DETAIL 5

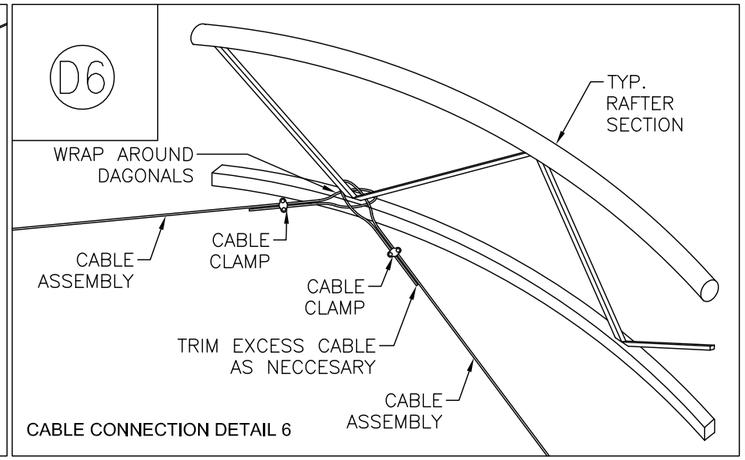

CABLE CONNECTION DETAIL 6

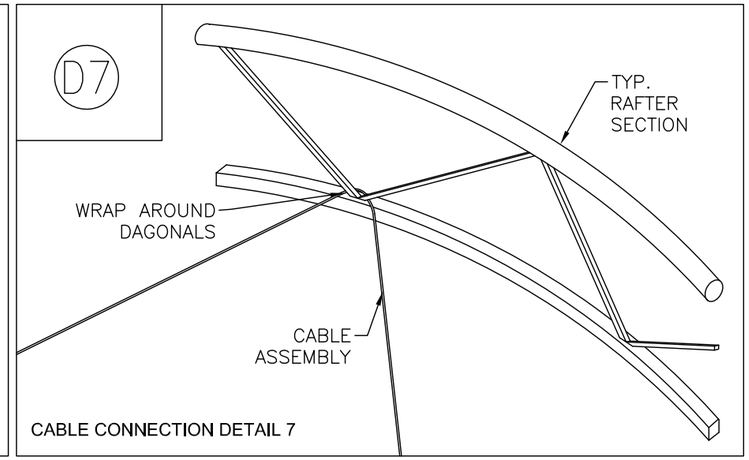

CABLE CONNECTION DETAIL 7

THIS DOCUMENT CONTAINS INFORMATION PROPRIETARY TO ACCU-STEEL INC. IT SHALL NOT BE REPRODUCED, USED, OR DISCLOSED WITHOUT PRIOR WRITTEN PERMISSION OF ACCU-STEEL INC.

Rev.	Date:	Description:

Rev.	Date:	Description:

Accu-Steel
FABRIC COVERED BUILDING SOLUTIONS
1-877-338-6936
P.O. BOX 201
TEMPLETON, IA 51463

Project Name:
Project Location:
Building Description:
Date:
Building Design Code & Loads:

Date:	01/02/2011
Drawn By:	JCB
CAD filename:	
Job Number:	
Bldg. Number:	
Dwg. Number:	

IP-02

J:\SHARED TRANSFER 8_12_2011\DRAFTING - TECH SALES\5. DRAFTING TOOLS\GENERIC INSTALL CAD\GENERIC.DWG

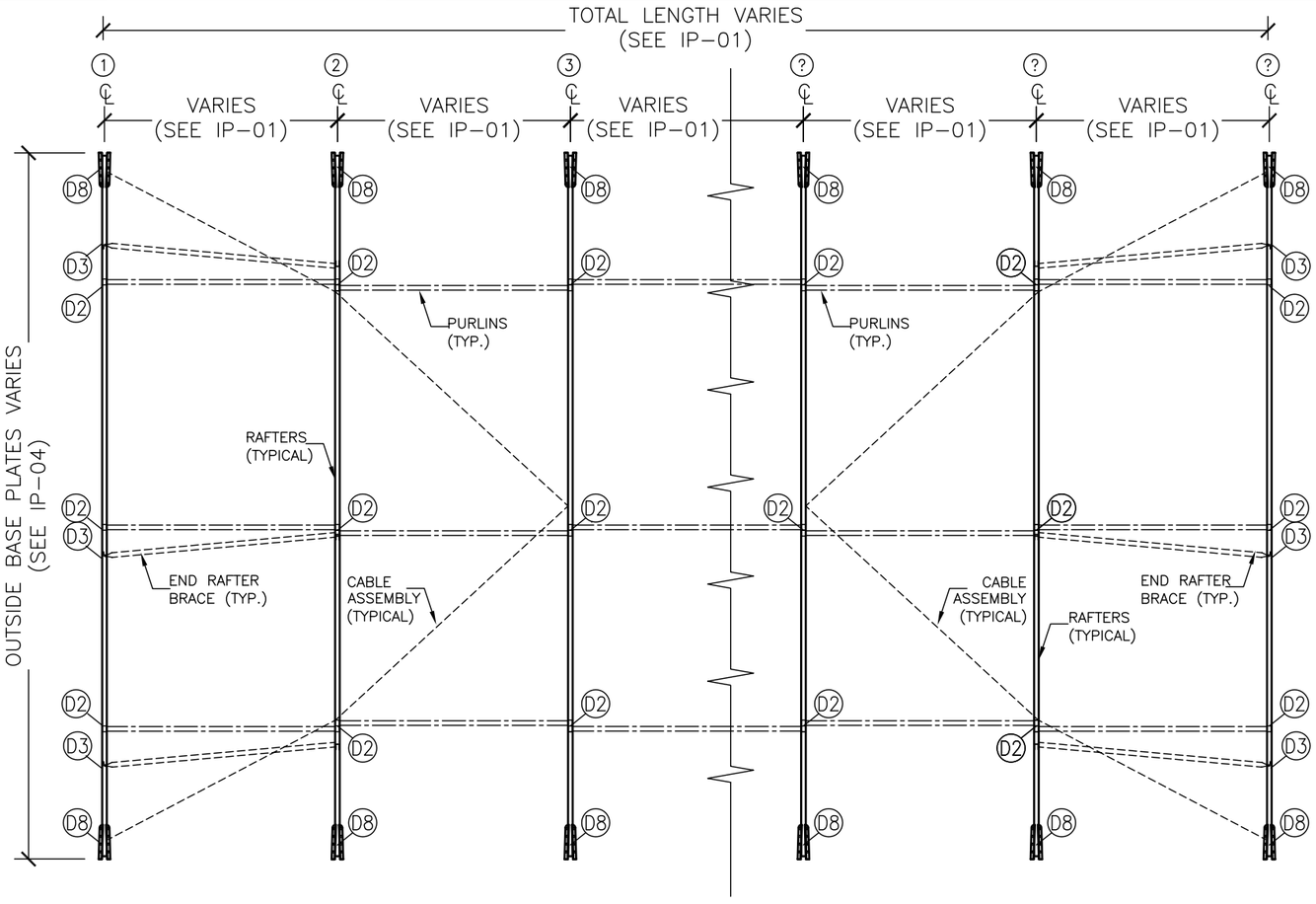

CONNECTION DETAILS

NOTE: VIEW IS FOR CONNECTION DETAILS ONLY. SEE SHEET IP-01 FOR ACTUAL PURLIN AND END RAFTER BRACE LOCATIONS.

D8

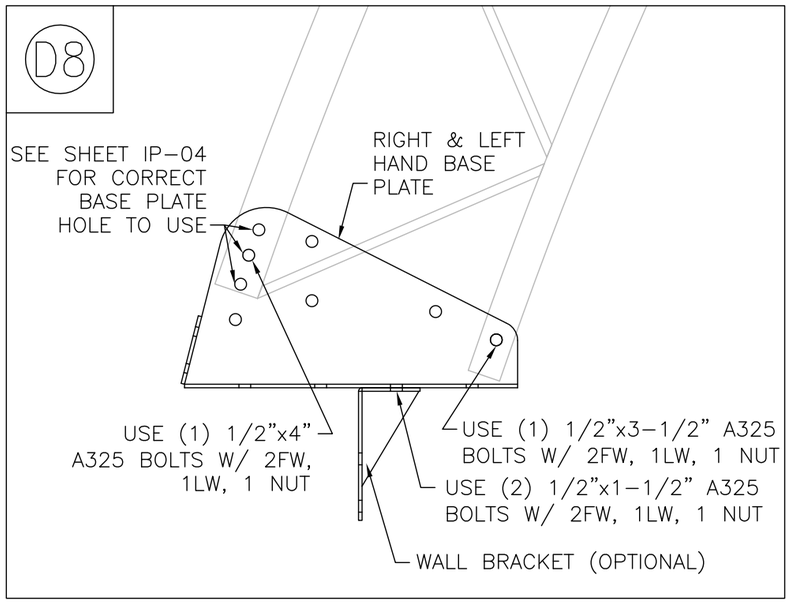

D1

SEE IP-01 FOR LOCATIONS

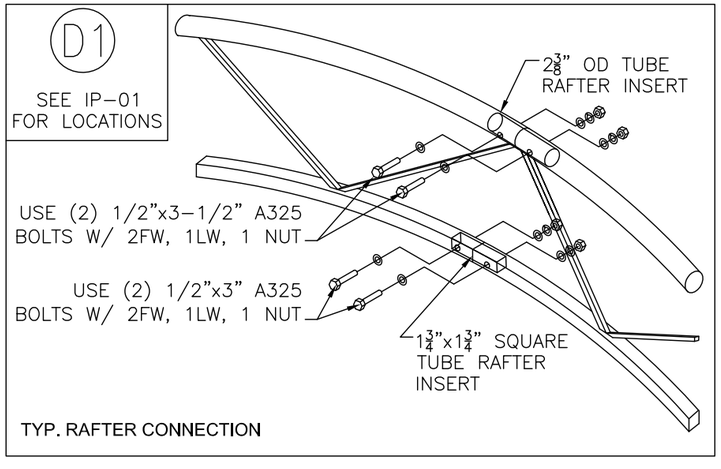

TYP. RAFTER CONNECTION

D2

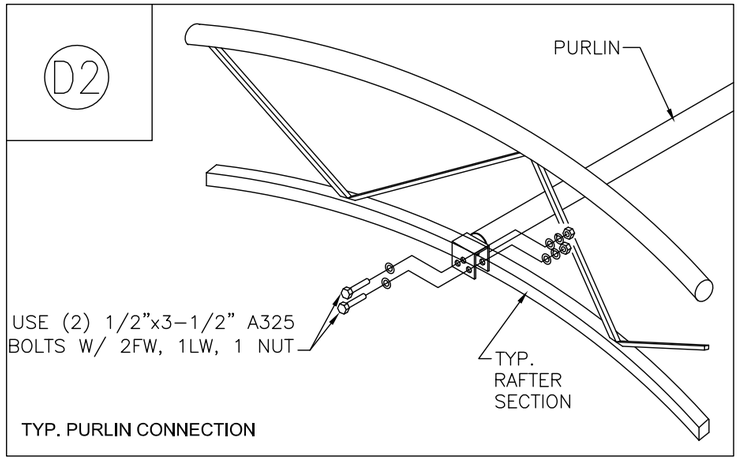

TYP. PURLIN CONNECTION

D3

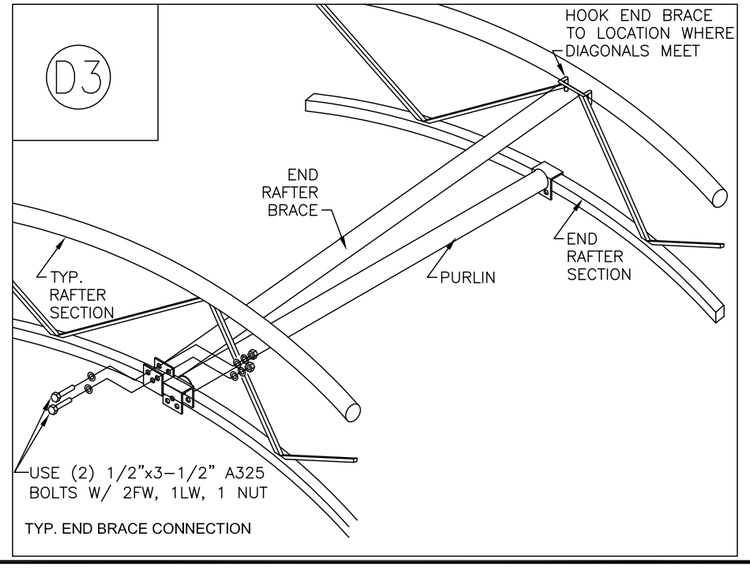

TYP. END BRACE CONNECTION

THIS DOCUMENT CONTAINS INFORMATION PROPRIETARY TO ACCU-STEEL INC. IT SHALL NOT BE REPRODUCED, USED, OR DISCLOSED WITHOUT PRIOR WRITTEN PERMISSION OF ACCU-STEEL INC.

Rev.	Description:	Date:

Accu-Steel
FABRIC COVERED BUILDING SOLUTIONS
1-877-338-6936
P.O. BOX 201
TEMPLETON, IA 51463

Project Name:
Project Location:
Building Description:
Date:
Building Design Code & Loads:

Date:	01/02/2011
Drawn By:	JCB
CAD filename:	
Job Number:	
Bldg. Number:	
Dwg. Number:	IP-03

J:\JARED_TRANSFER_8_12_2011\DRAFTING - TECH SALES\5. DRAFTING TOOLS\GENERIC INSTALL CAD\GENERIC.DWG

40'HP, 50'HP,& 60'HP BASEPLATE DETAILS

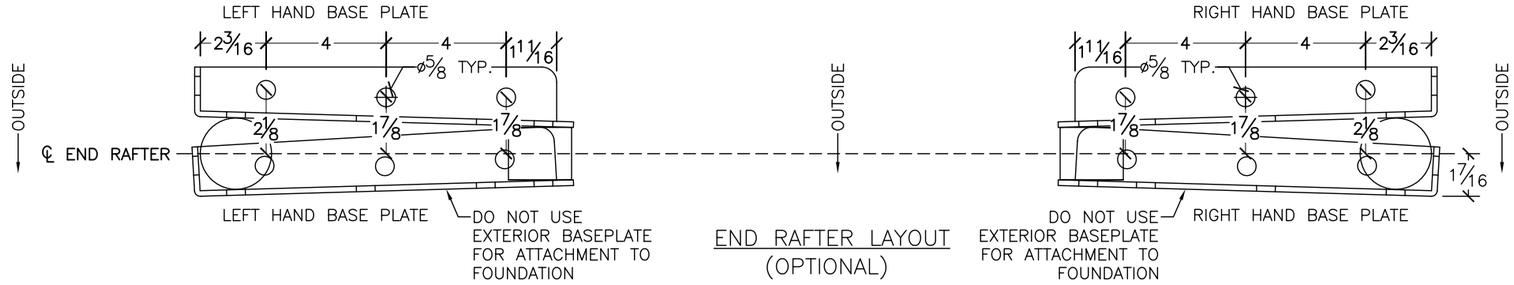

END RAFTER LAYOUT
(OPTIONAL)

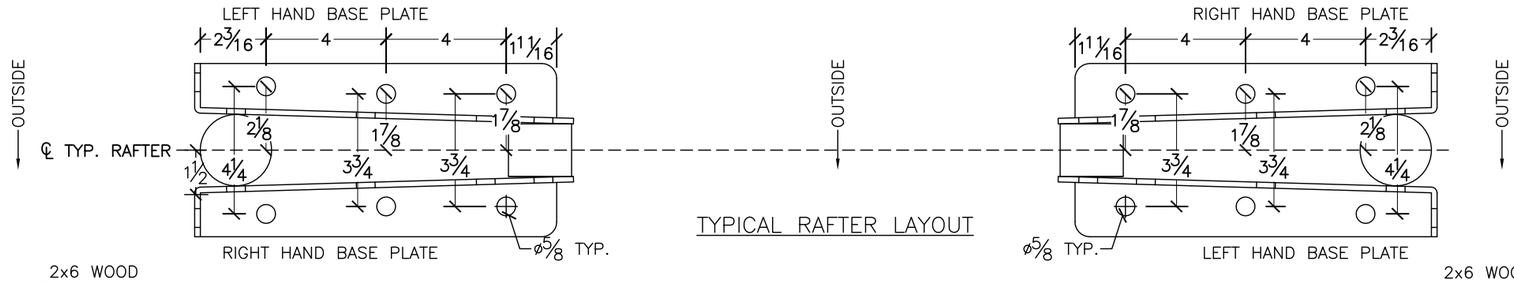

TYPICAL RAFTER LAYOUT

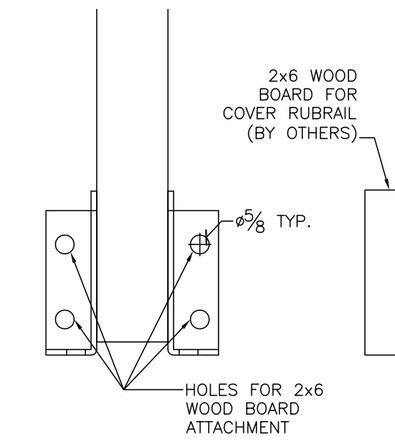

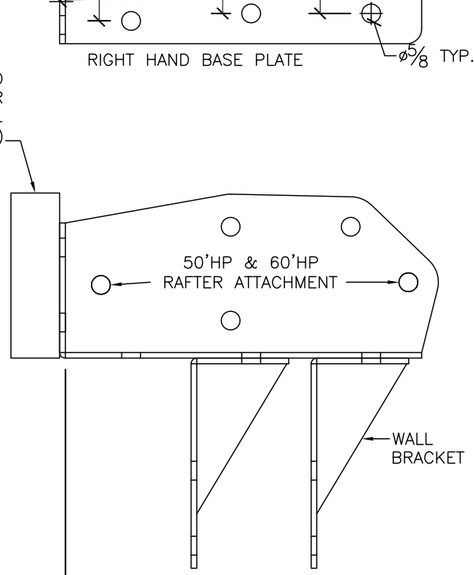

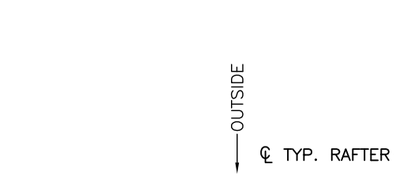

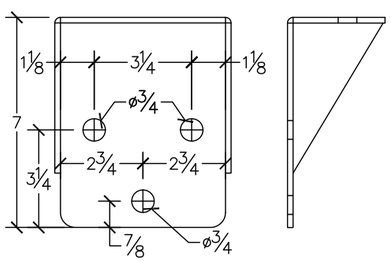

WALL BRACKET DETAIL

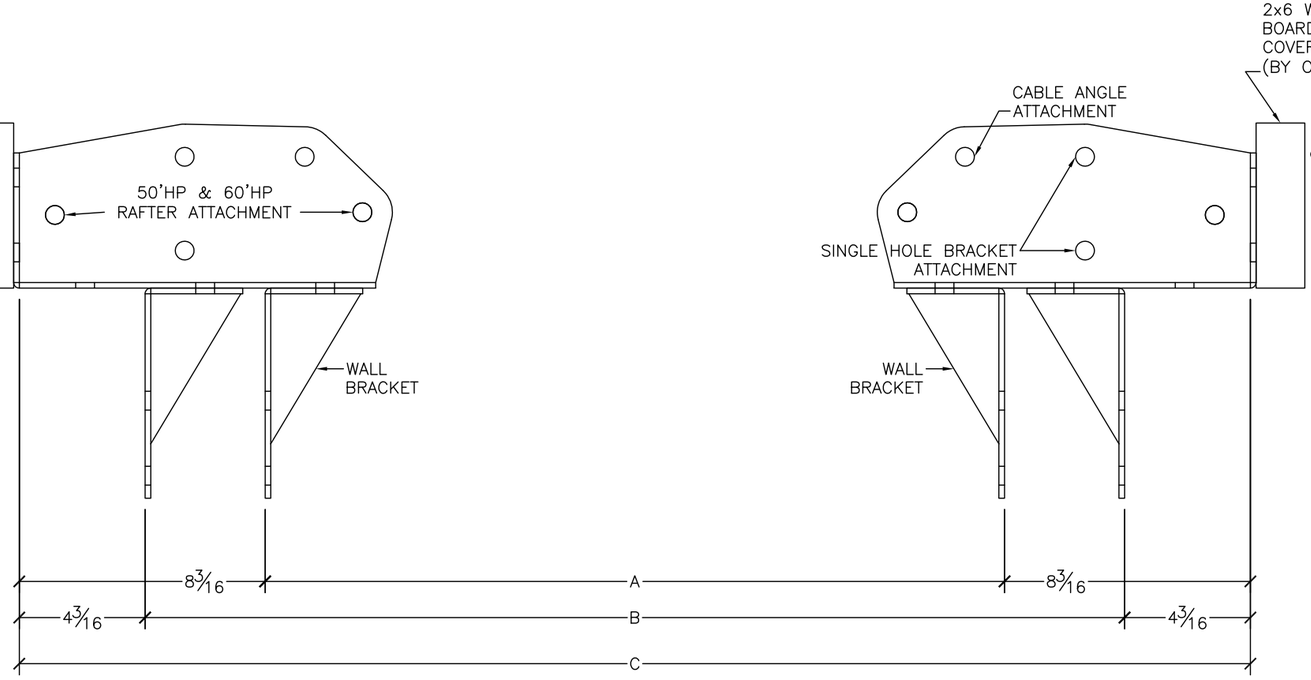

BLD WIDTH	A	B	C
40' HP	38'–7 5/8"	39'–3 5/8"	40'–0"
50' HP	48'–7 5/8"	49'–3 5/8"	50'–0"
60' HP	58'–7 5/8"	49'–3 5/8"	60'–0"

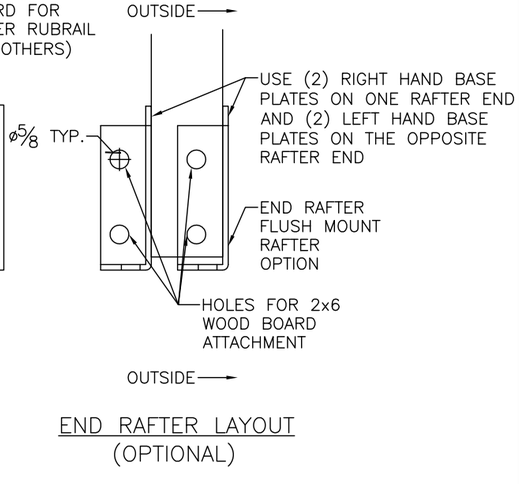

END RAFTER LAYOUT
(OPTIONAL)

THIS DOCUMENT CONTAINS INFORMATION PROPRIETARY TO ACCU-STEEL INC. IT SHALL NOT BE REPRODUCED, USED, OR DISCLOSED WITHOUT PRIOR WRITTEN PERMISSION OF ACCU-STEEL INC.

Description:	Date:	Rev.

Accu-Steel
FABRIC COVERED BUILDING SOLUTIONS
1-877-338-6936
P.O. BOX 201
TEMPLETON, IA 51463

Project Name:
Project Location:
Building Description:
Date:
Building Design Code & Loads:

Date: 01/02/2011
Drawn By: JCB
CAD filename:
Job Number:
Bldg. Number:
Dwg. Number:

IP-04HP

J:\JARED TRANSFER 8-12-2011\DRAFTING - TECH SALES\5 DRAFTING TOOLS\GENERIC INSTALL CAD\GENERIC.DWG

40' HIGH PROFILE SOLID ENDWALL LAYOUT

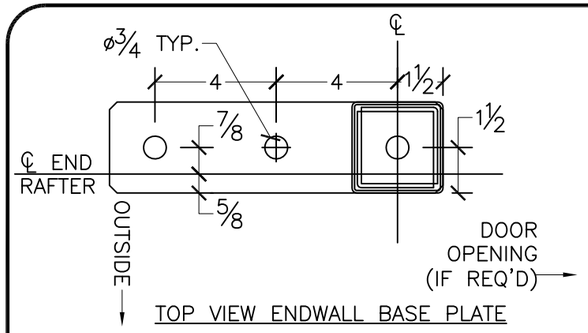

TOP VIEW ENDWALL BASE PLATE

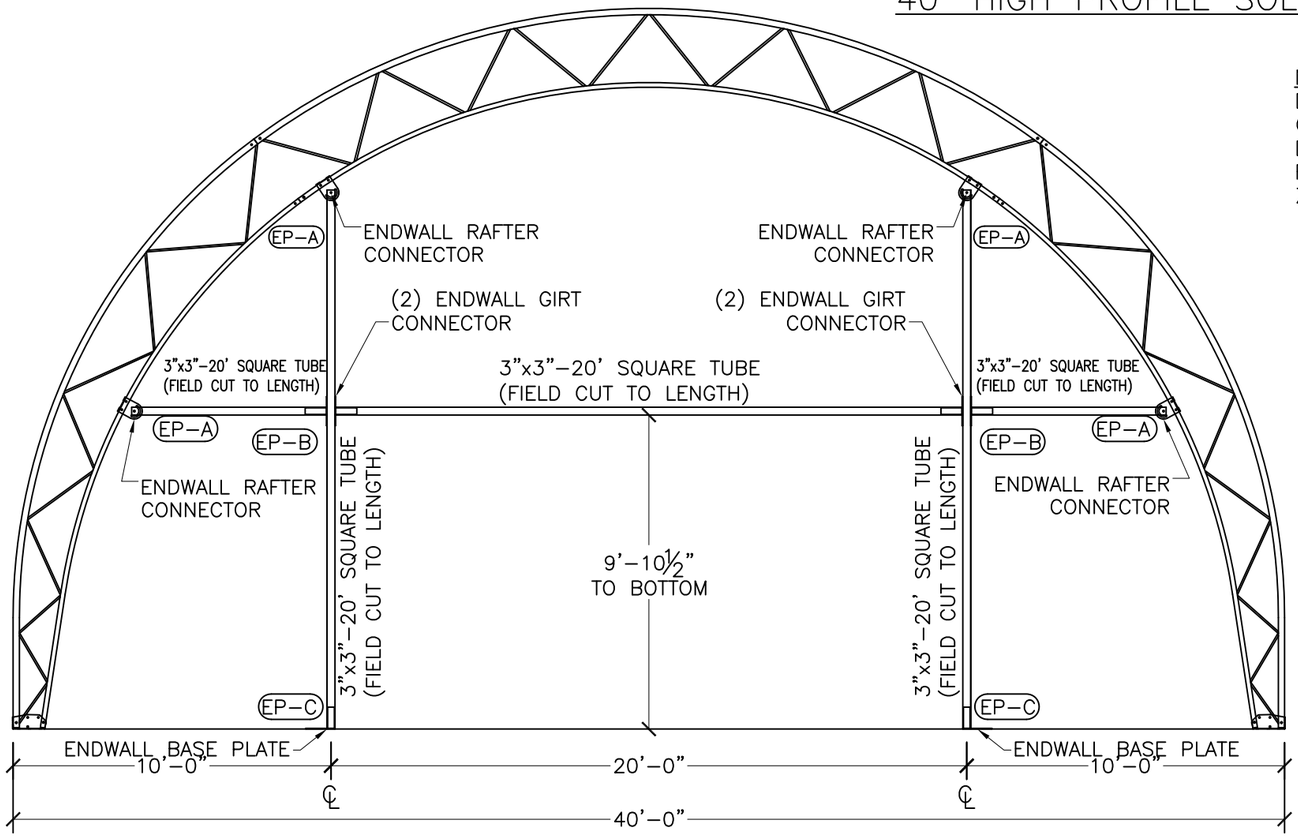

NOTE: FIELD CUTTING AND DRILLING OF ENDWALL COMPONENTS IS REQUIRED. DOUBLE COAT FIELD CUTS AND FIELD DRILLED HOLES WITH ZINC RICH SPRAY PAINT.

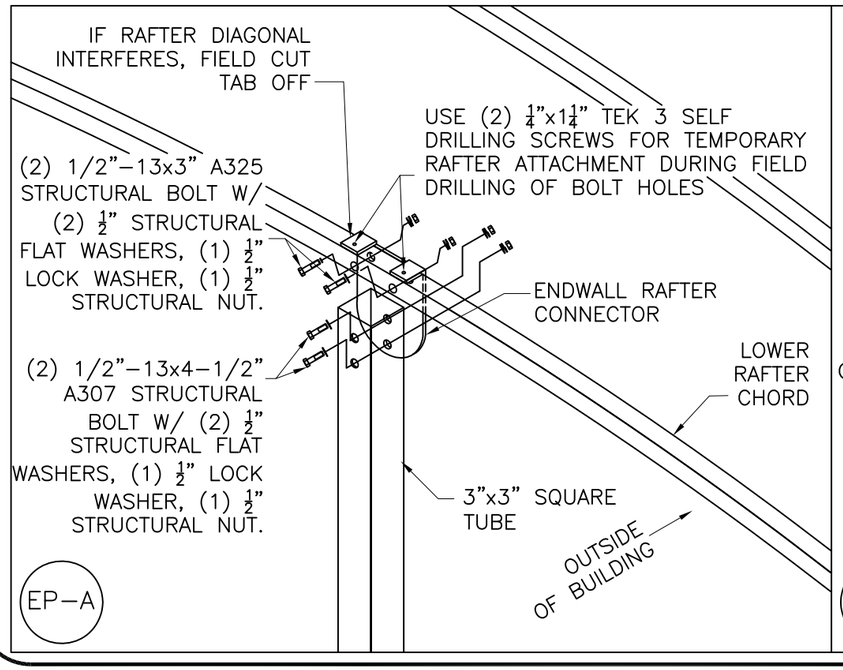

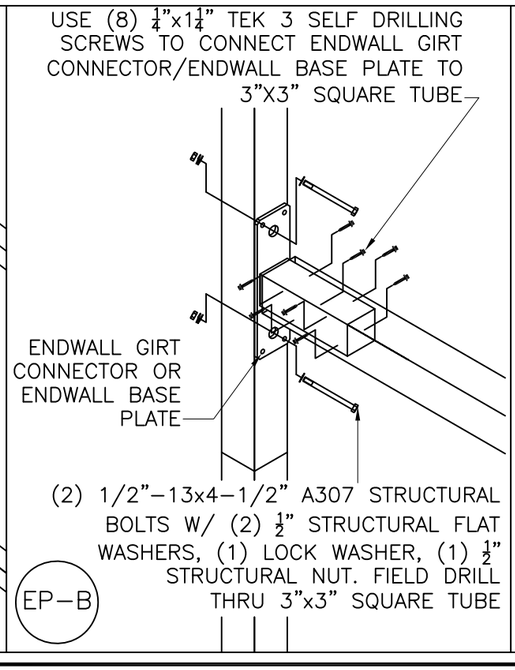

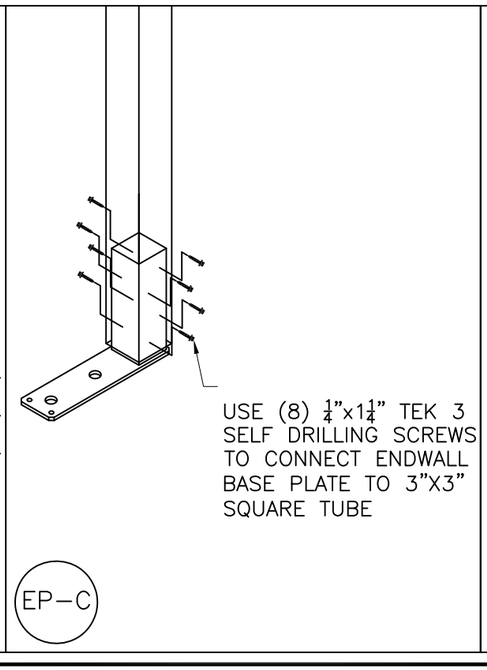

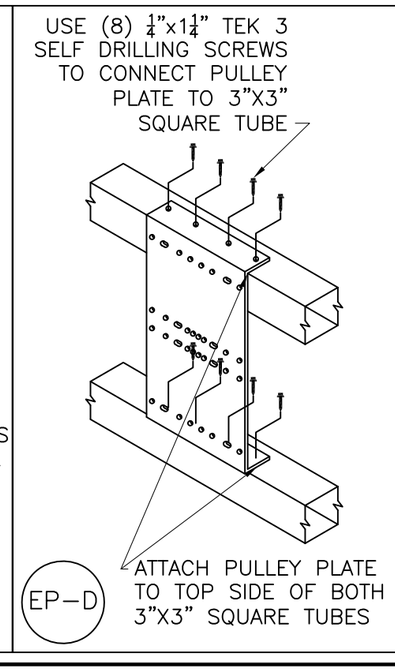

THIS DOCUMENT CONTAINS INFORMATION PROPRIETARY TO ACCU-STEEL INC. IT SHALL NOT BE REPRODUCED, USED, OR DISCLOSED WITHOUT PRIOR WRITTEN PERMISSION OF ACCU-STEEL INC.

Rev.	Description:	Date:

Accu-Steel
FABRIC COVERED BUILDING SOLUTIONS
1-877-338-6936
P.O. BOX 201
TEMPLETON, IA 51463

Project Name:
Project Location:
Building Description:
Date:
Building Design Code & Loads:

Date:	02/06/2011
Drawn By:	JCB
CAD filename:	
Job Number:	
Bldg. Number:	
Dwg. Number:	IP-40HPA

J:\JARED TRANSFER 8-12-2011\DRAFTING - TECH SALES\5. DRAFTING TOOLS\GENERIC INSTALL CAD\GENERIC ENDWALL LAYOUTS.DWG

40' HIGH PROFILE 19'–7½" OPENING ENDWALL LAYOUT

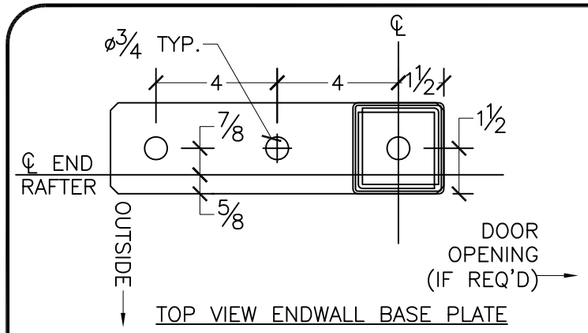

TOP VIEW ENDWALL BASE PLATE

NOTE: DOOR OPENING ENDWALLS ONLY CONTAIN 1 TOP 3"x3" SQUARE TUBE. 2ND 3"x3" SQUARE TUBE AND PULLEY PLATES ARE PROVIDED WITH GATHER DOOR KITS ONLY.

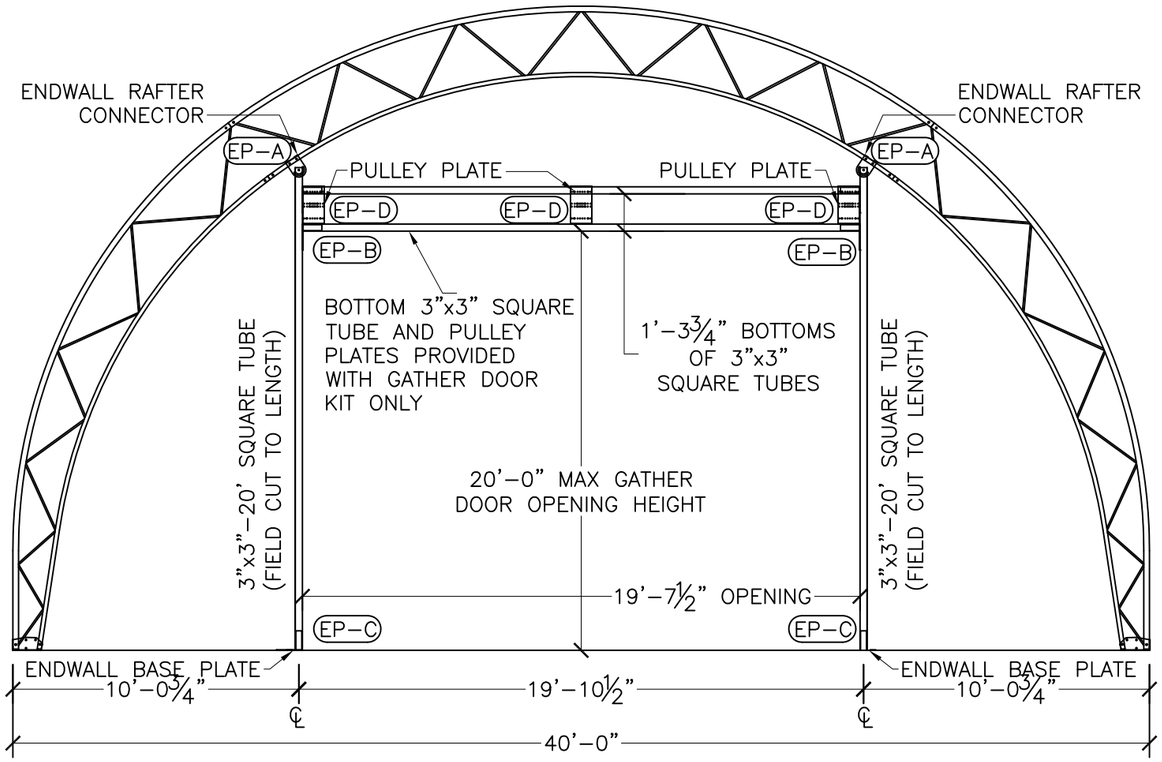

NOTE: FIELD CUTTING AND DRILLING OF ENDWALL COMPONENTS IS REQUIRED. DOUBLE COAT FIELD CUTS AND FIELD DRILLED HOLES WITH ZINC RICH SPRAY PAINT.

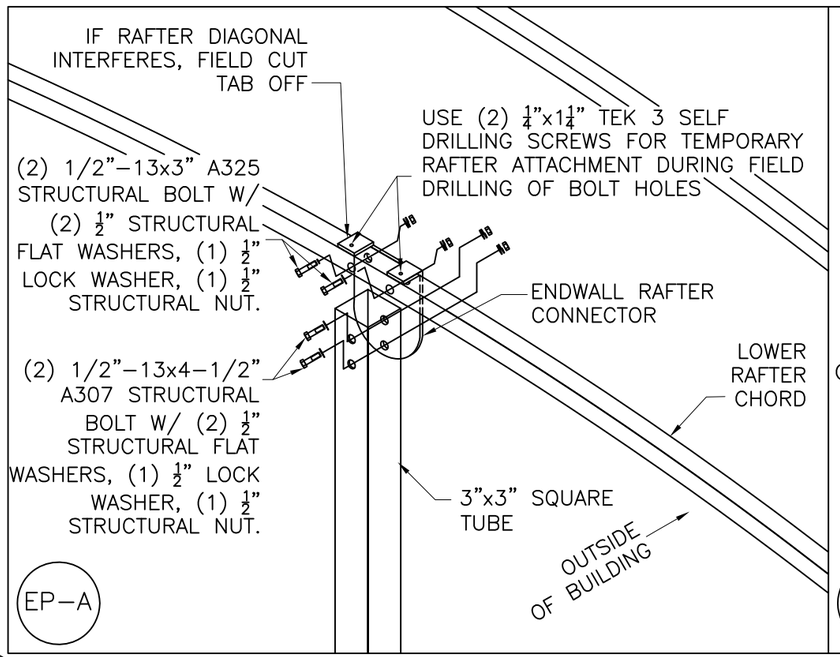

EP–A

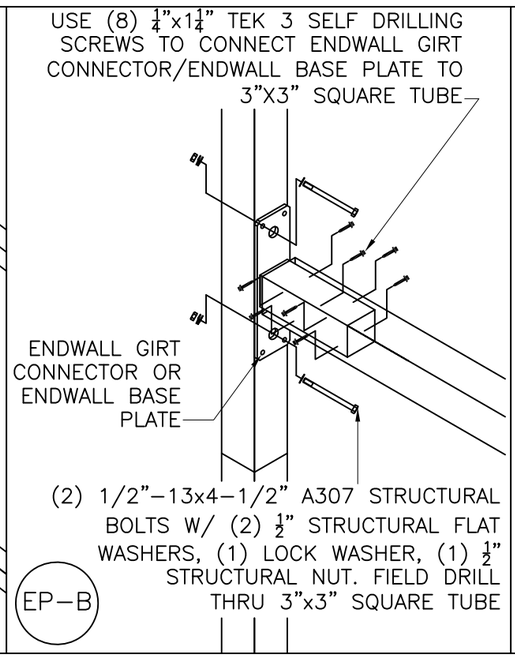

EP–B

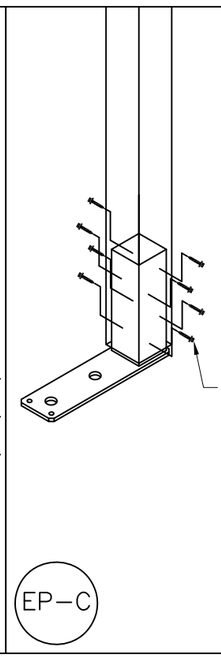

EP–C

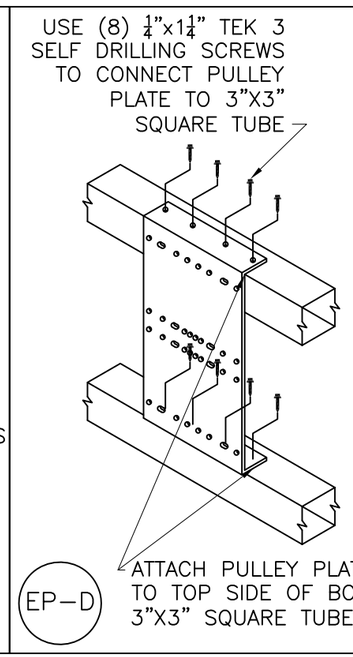

EP–D

THIS DOCUMENT CONTAINS INFORMATION PROPRIETARY TO ACCU-STEEL INC. IT SHALL NOT BE REPRODUCED, USED, OR DISCLOSED WITHOUT PRIOR WRITTEN PERMISSION OF ACCU-STEEL INC.

Rev.	Date:	Description:

Accu-Steel
FABRIC COVERED BUILDING SOLUTIONS
1-877-338-6936
P.O. BOX 201
TEMPLETON, IA 51463

Project Name:
Project Location:
Building Description:
Date:
Building Design Code & Loads:

Date:	02/06/2011
Drawn By:	JCB
CAD filename:	
Job Number:	
Bldg. Number:	
Dwg. Number:	

IP-40HPB

J:\JARED TRANSFER 8-12-2011\DRAFTING - TECH SALES\5. DRAFTING TOOLS\GENERIC INSTALL CAD\GENERIC ENDWALL LAYOUTS.DWG

40' HIGH PROFILE 16'-0" OPENING ENDWALL LAYOUT

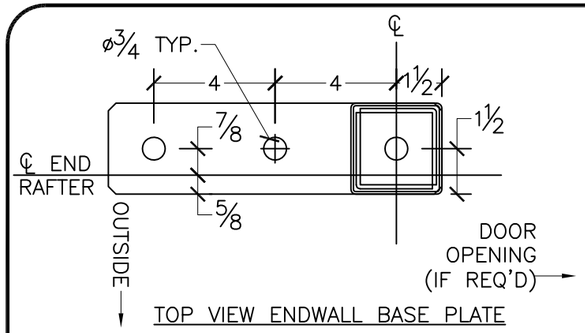

TOP VIEW ENDWALL BASE PLATE

NOTE: DOOR OPENING ENDWALLS ONLY CONTAIN 1 TOP 3"x3" SQUARE TUBE. 2ND 3"x3" SQUARE TUBE AND PULLEY PLATES ARE PROVIDED WITH GATHER DOOR KITS ONLY.

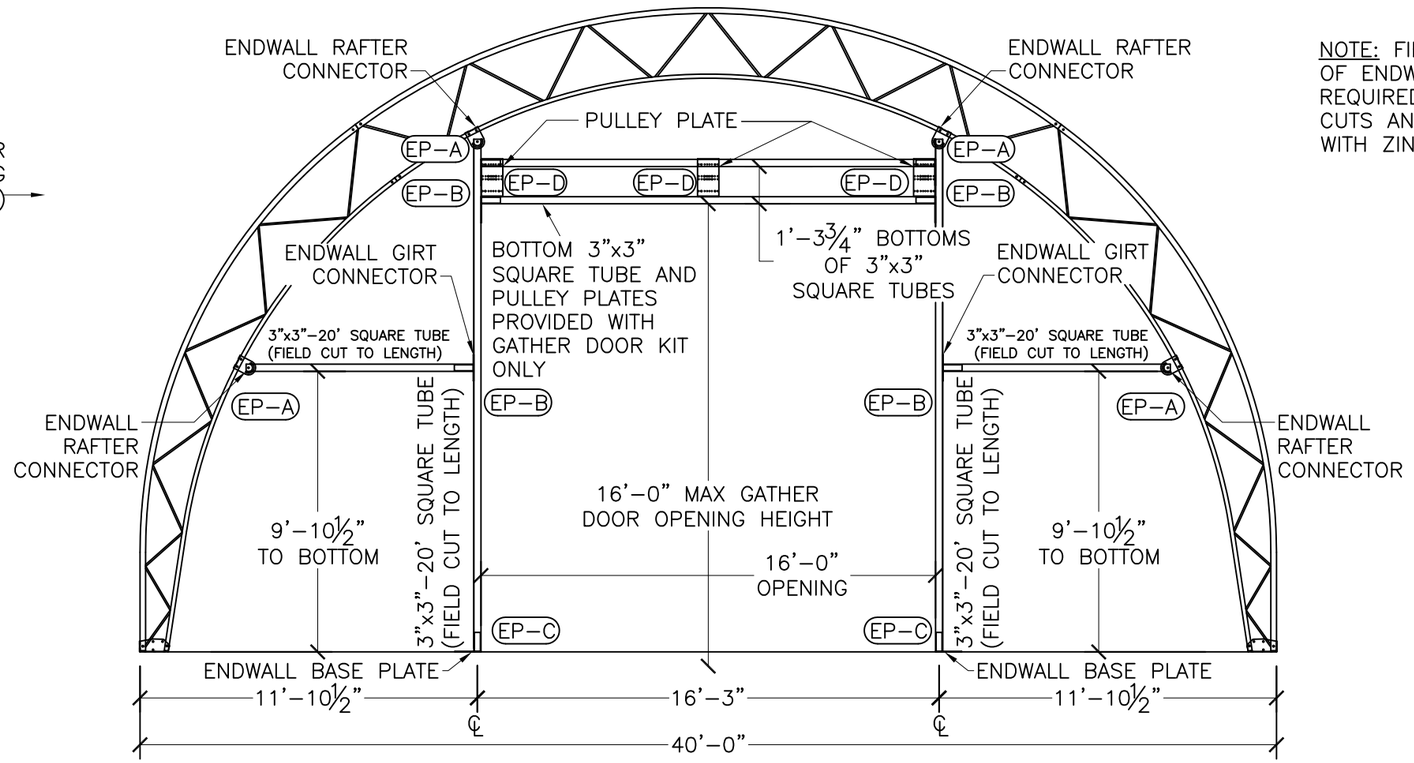

NOTE: FIELD CUTTING AND DRILLING OF ENDWALL COMPONENTS IS REQUIRED. DOUBLE COAT FIELD CUTS AND FIELD DRILLED HOLES WITH ZINC RICH SPRAY PAINT.

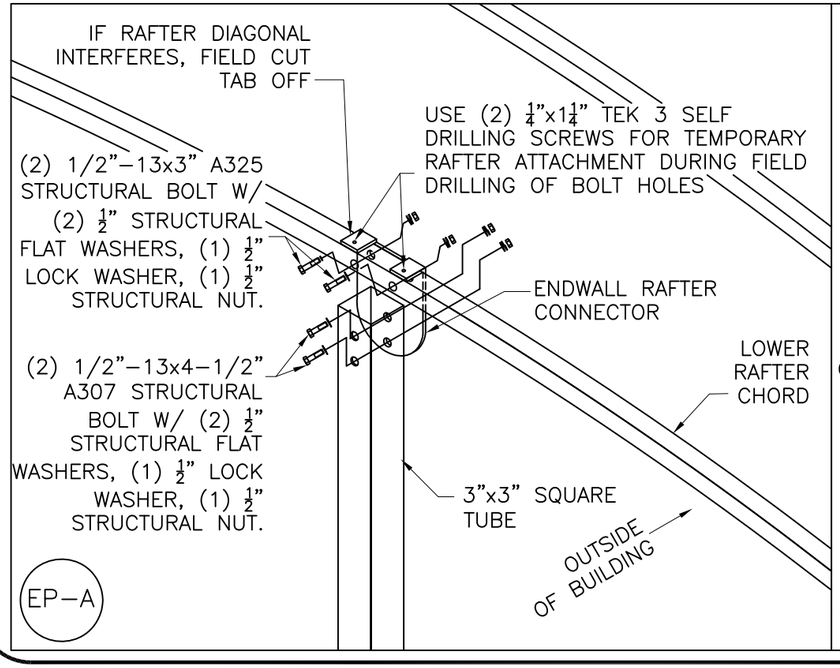

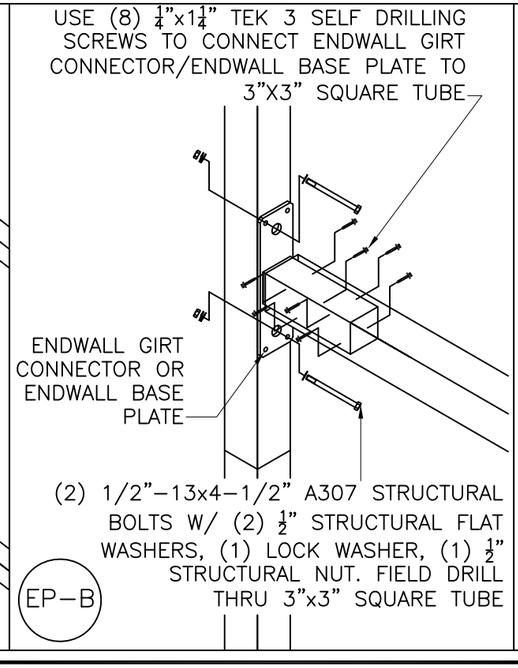

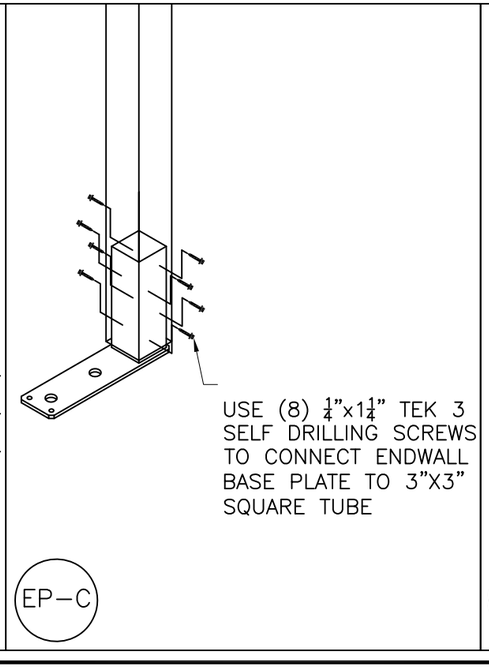

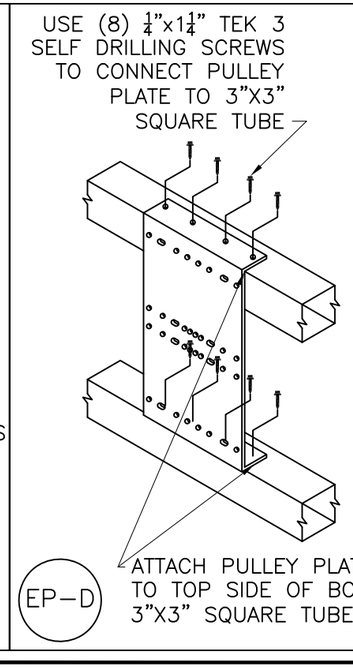

THIS DOCUMENT CONTAINS INFORMATION PROPRIETARY TO ACCU-STEEL INC. IT SHALL NOT BE REPRODUCED, USED, OR DISCLOSED WITHOUT PRIOR WRITTEN PERMISSION OF ACCU-STEEL INC.

Rev.	Date:	Description:

Rev.	Date:	Description:

Accu-Steel
FABRIC COVERED BUILDING SOLUTIONS
1-877-338-6936
P.O. BOX 201
TEMPLETON, IA 51463

Project Name:
Project Location:
Building Description:
Date:
Building Design Code & Loads:

Date:	02/06/2011
Drawn By:	JCB
CAD filename:	
Job Number:	
Bldg. Number:	
Dwg. Number:	

IP-40HPC

J:\JARED TRANSFER 8-12-2011\DRAFTING - TECH SALES\5. DRAFTING TOOLS\GENERIC INSTALL CAD\GENERIC ENDWALL LAYOUTS.DWG

40' HIGH PROFILE 14'-0" OPENING ENDWALL LAYOUT

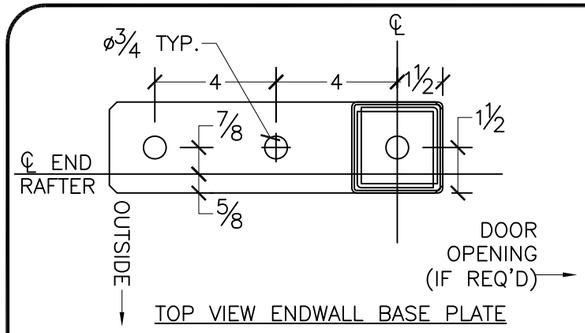

TOP VIEW ENDWALL BASE PLATE

NOTE: DOOR OPENING ENDWALLS ONLY CONTAIN 1 TOP 3"x3" SQUARE TUBE. 2ND 3"x3" SQUARE TUBE AND PULLEY PLATES ARE PROVIDED WITH GATHER DOOR KITS ONLY.

NOTE: FIELD CUTTING AND DRILLING OF ENDWALL COMPONENTS IS REQUIRED. DOUBLE COAT FIELD CUTS AND FIELD DRILLED HOLES WITH ZINC RICH SPRAY PAINT.

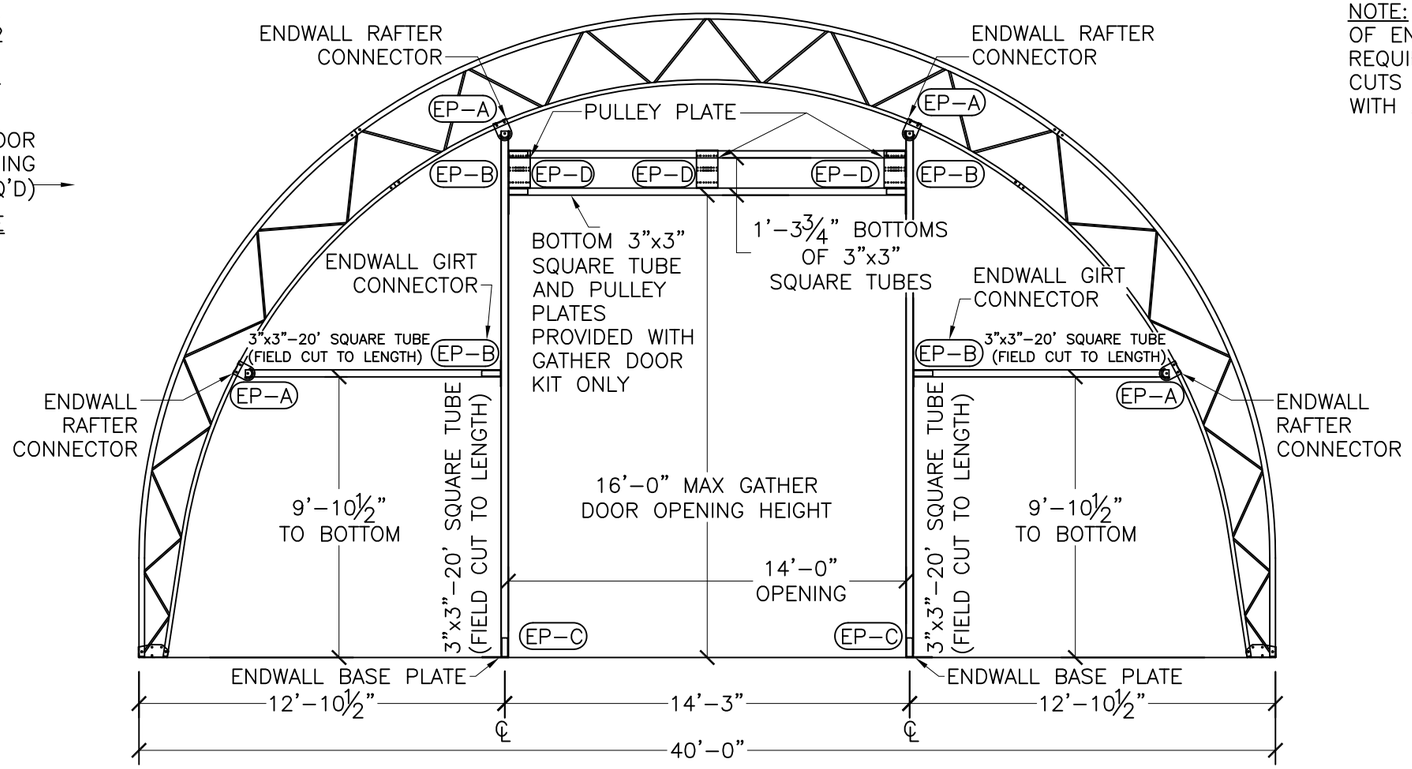

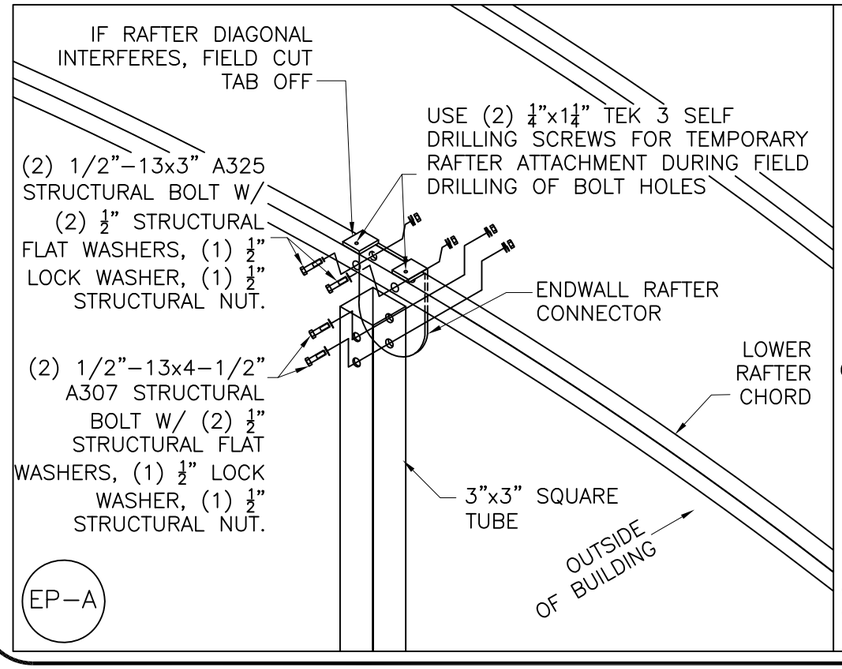

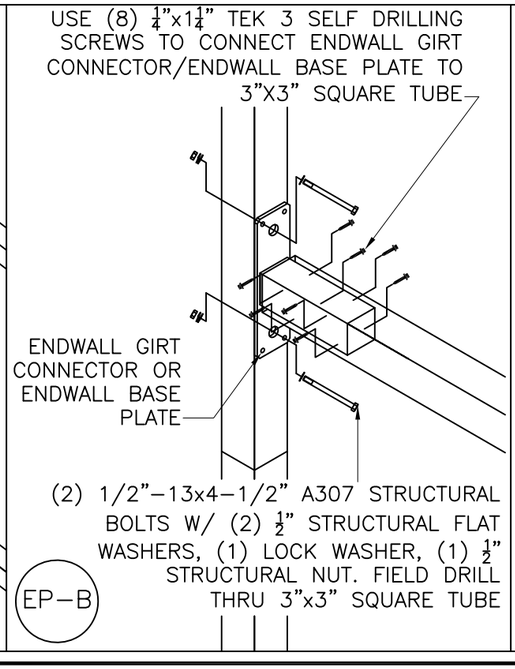

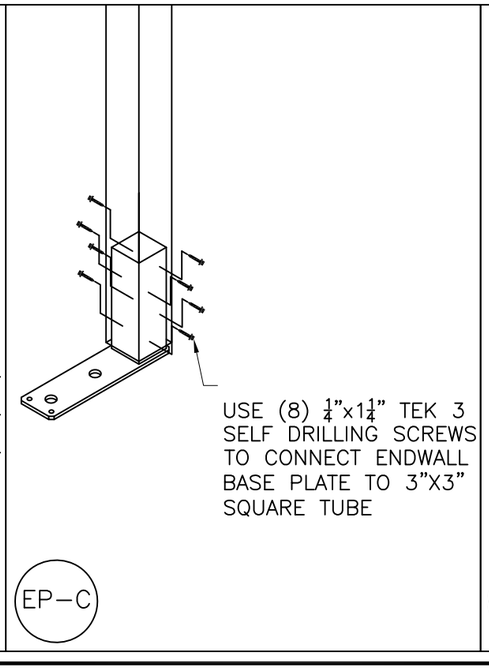

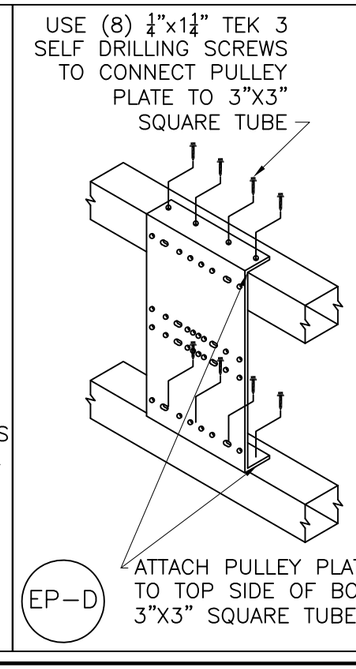

THIS DOCUMENT CONTAINS INFORMATION PROPRIETARY TO ACCU-STEEL INC. IT SHALL NOT BE REPRODUCED, USED, OR DISCLOSED WITHOUT PRIOR WRITTEN PERMISSION OF ACCU-STEEL INC.

Rev.	Date:	Description:

Rev.	Date:	Description:

Accu-Steel
FABRIC COVERED BUILDING SOLUTIONS
1-877-338-6936
P.O. BOX 201
TEMPLETON, IA 51463

Project Name:	
Project Location:	
Building Description:	
Date:	
Building Design Code & Loads:	
Date:	02/06/2011
Drawn By:	JCB
CAD filename:	
Job Number:	
Bldg. Number:	
Dwg. Number:	**IP-40HPD**

J:\JARED TRANSFER 8-12-2011\DRAFTING - TECH SALES\5. DRAFTING TOOLS\GENERIC INSTALL CAD\GENERIC ENDWALL LAYOUTS.DWG

40' HIGH PROFIILE 12'–0" OPENING ENDWALL LAYOUT

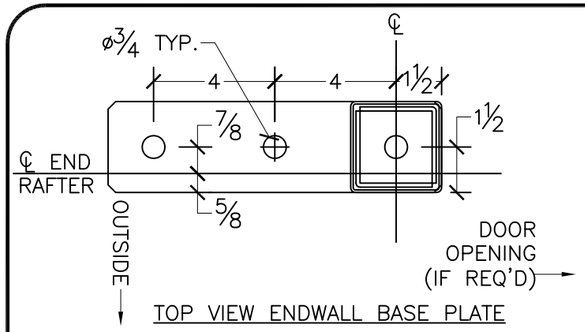

TOP VIEW ENDWALL BASE PLATE

NOTE: DOOR OPENING ENDWALLS ONLY CONTAIN 1 TOP 3"x3" SQUARE TUBE. 2ND 3"x3" SQUARE TUBE AND PULLEY PLATES ARE PROVIDED WITH GATHER DOOR KITS ONLY.

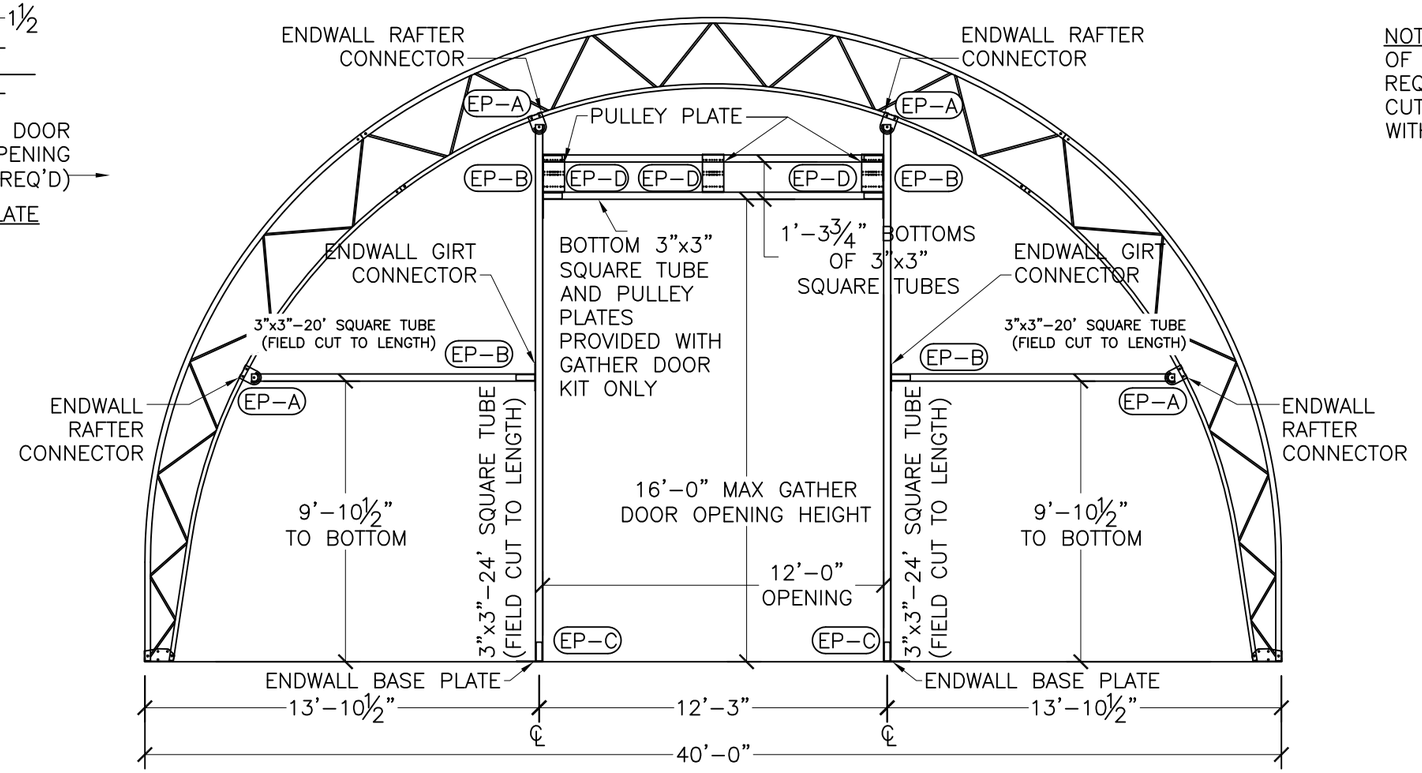

NOTE: FIELD CUTTING AND DRILLING OF ENDWALL COMPONENTS IS REQUIRED. DOUBLE COAT FIELD CUTS AND FIELD DRILLED HOLES WITH ZINC RICH SPRAY PAINT.

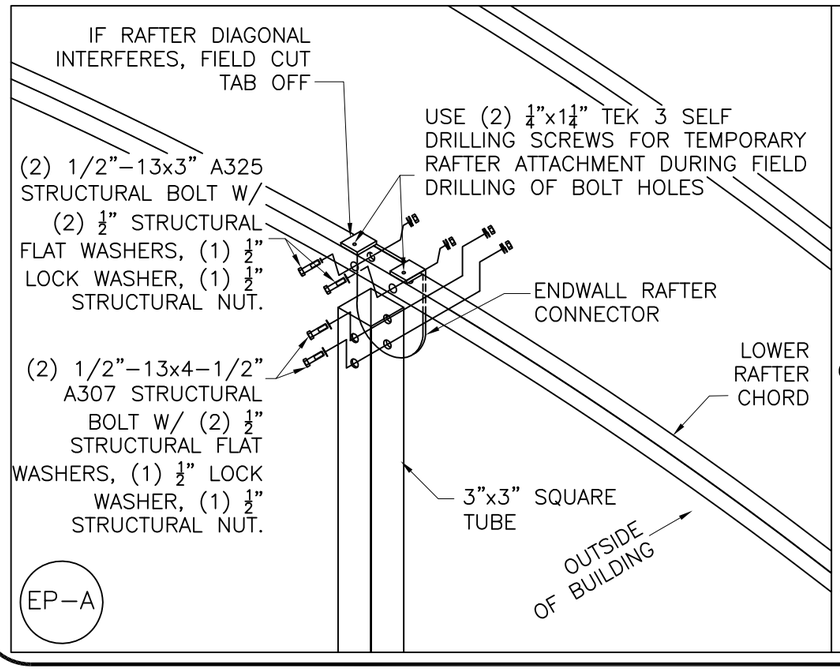

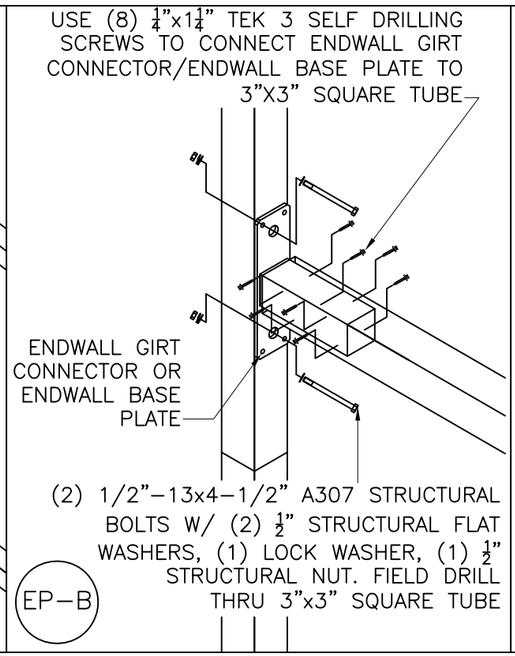

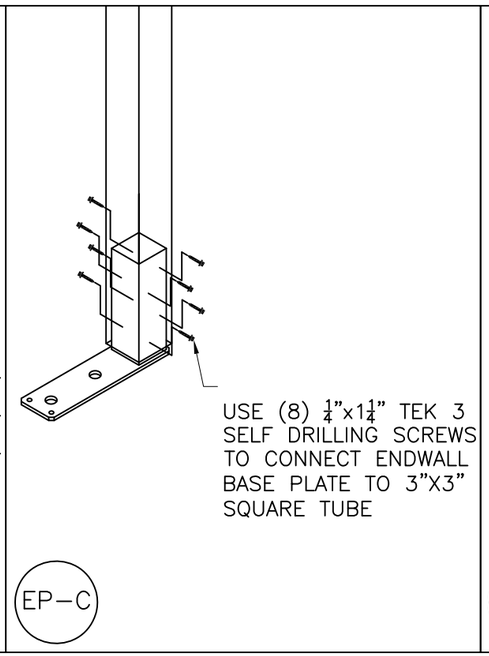

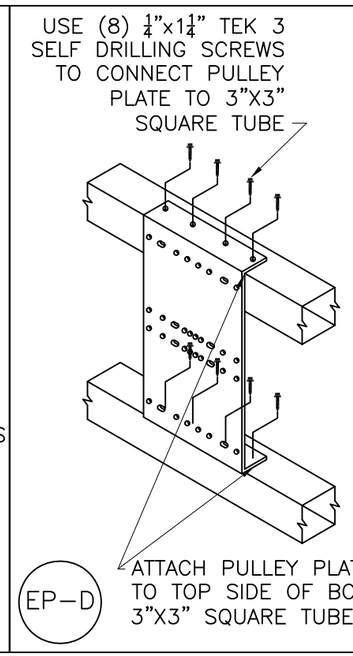

THIS DOCUMENT CONTAINS INFORMATION PROPRIETARY TO ACCU-STEEL INC. IT SHALL NOT BE REPRODUCED, USED, OR DISCLOSED WITHOUT PRIOR WRITTEN PERMISSION OF ACCU-STEEL INC.

Rev.	Date:	Description:

Accu-Steel
FABRIC COVERED BUILDING SOLUTIONS
1-877-338-6936
P.O. BOX 201
TEMPLETON, IA 51463

Project Name:	
Project Location:	
Building Description:	
Date:	
Building Design Code & Loads:	
Date:	02/06/2011
Drawn By:	JCB
CAD filename:	
Job Number:	
Bldg. Number:	
Dwg. Number:	**IP-40HPE**

J:\JARED TRANSFER 8–12–2011\DRAFTING — TECH SALES\5. DRAFTING TOOLS\GENERIC INSTALL CAD\GENERIC ENDWALL LAYOUTS.DWG

END RAFTER KEDER TRACK ATTACHMENT

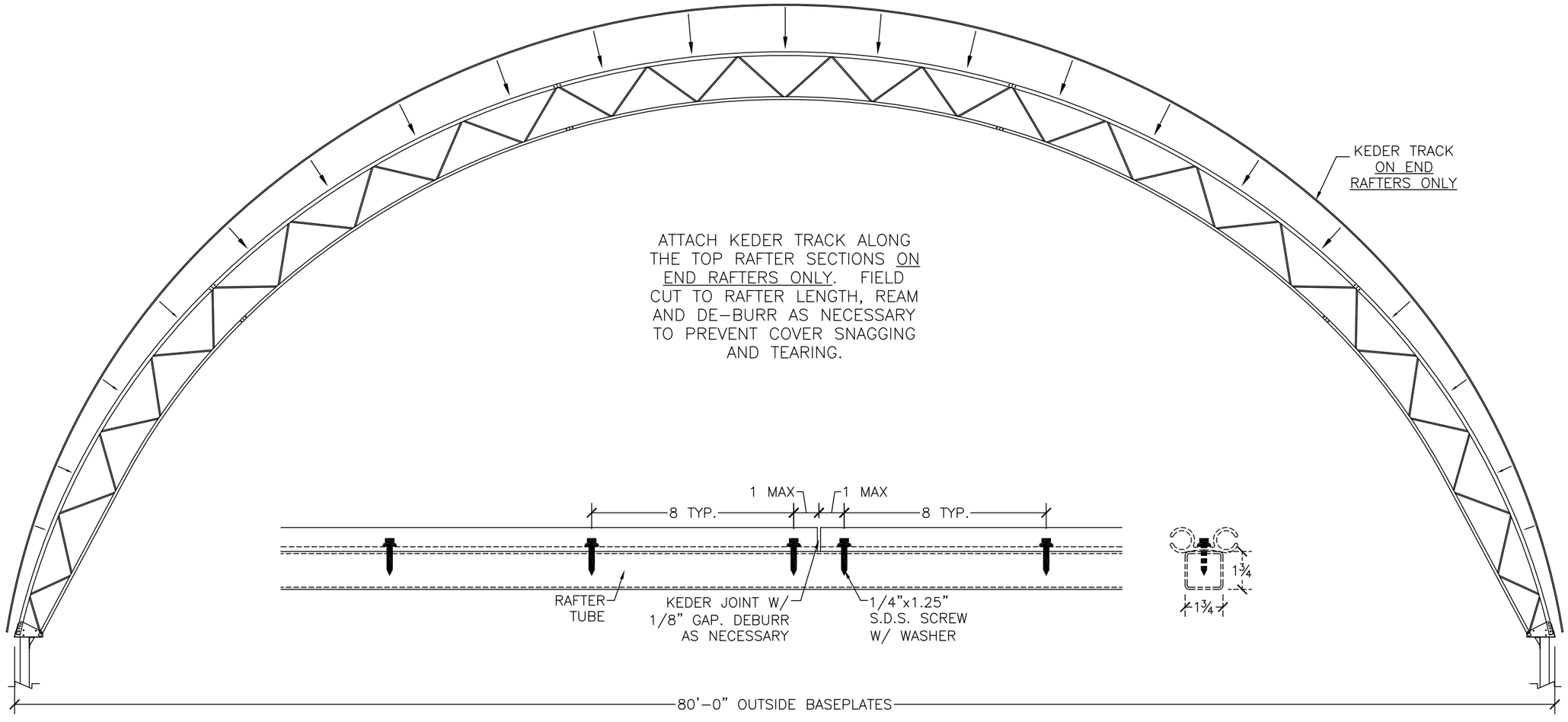

THIS DOCUMENT CONTAINS INFORMATION PROPRIETARY TO ACCU-STEEL INC. IT SHALL NOT BE REPRODUCED, USED, OR DISCLOSED WITHOUT PRIOR WRITTEN PERMISSION OF ACCU-STEEL INC.

Rev.	Date:	Description:

Rev.	Date:	Description:

Accu-Steel
FABRIC COVERED BUILDING SOLUTIONS
1-877-338-6936
P.O. BOX 201
TEMPLETON, IA 51463

Project Name:
Project Location:
Building Description:
Date:
Building Design Code & Loads:

Date: 7/26/2011
Drawn By: DMS
CAD filename:
Job Number:
Bldg. Number:
Dwg. Number:

CP-05K

J:\JARED TRANSFER 8-12-2011\DRAFTING - TECH SALES\5. DRAFTING TOOLS\GENERIC INSTALL CAD\GENERIC.DWG

HIGH PROFILE BUILDING
MAIN COVER WALL MOUNT LAYOUT

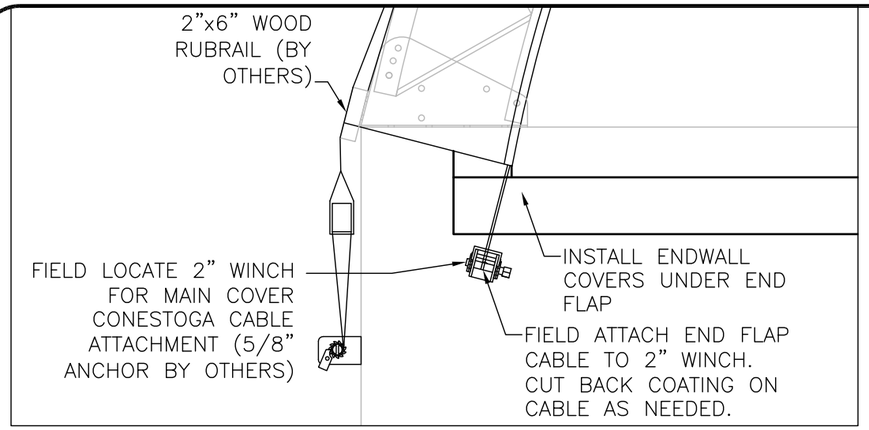

END FLAP DETAIL

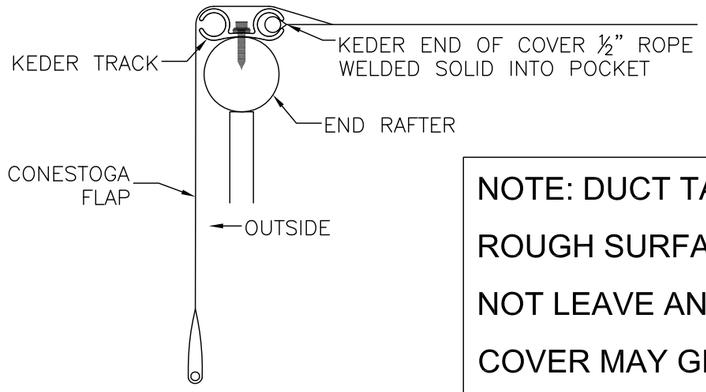

KEDER FLAP DETAIL
(PREVAILING WIND END)

NOTE: DUCT TAPE ALL RAFTER JOINTS AND ANY ROUGH SURFACES BEFORE PULLING COVERS. DO NOT LEAVE ANY EXPOSED, SHARP POINTS OR COVER MAY GET DAMAGED DURING OR AFTER INSTALLATION.

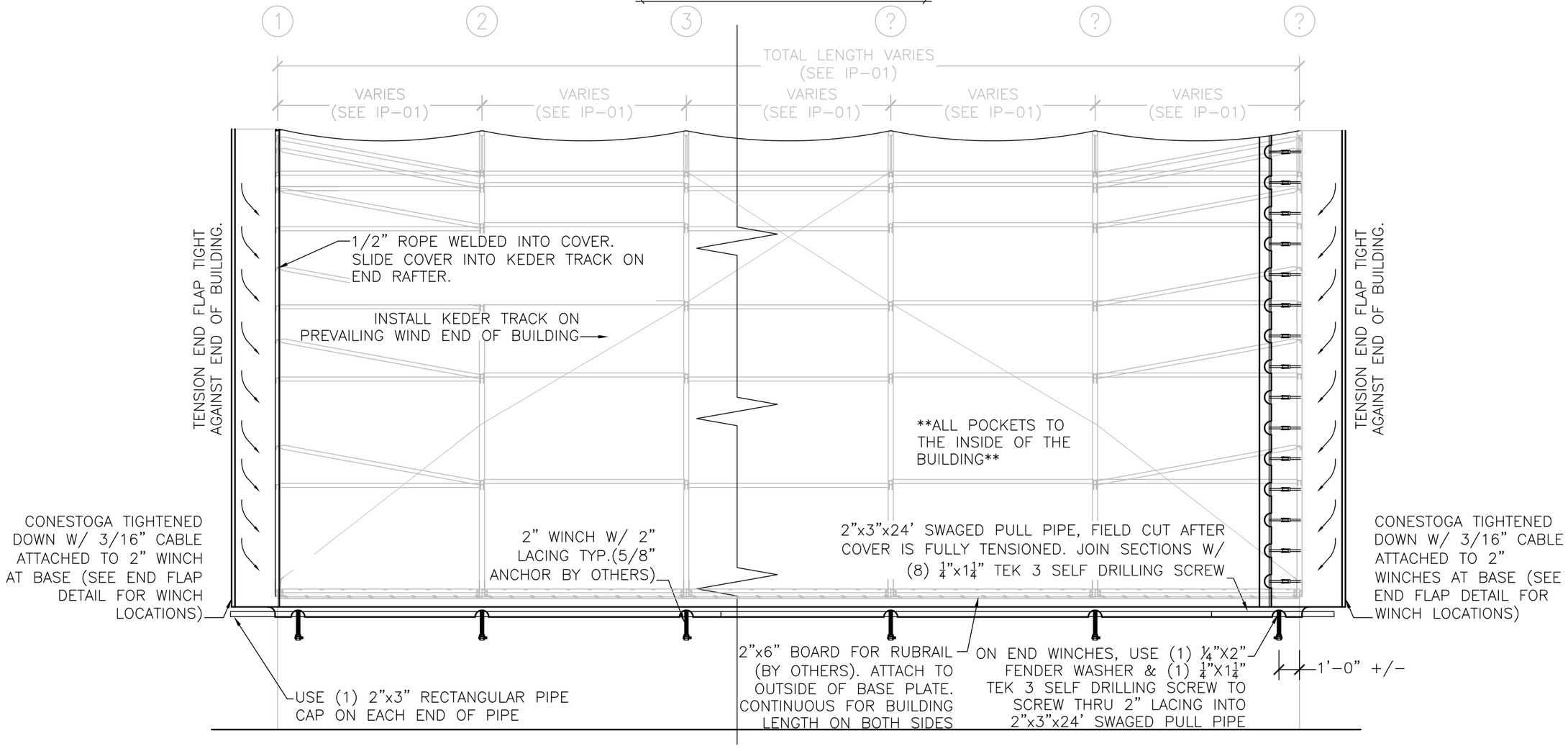

THIS DOCUMENT CONTAINS INFORMATION PROPRIETARY TO ACCU-STEEL INC. IT SHALL NOT BE REPRODUCED, USED, OR DISCLOSED WITHOUT PRIOR WRITTEN PERMISSION OF ACCU-STEEL INC.

Rev.	Date:	Description:

Rev.	Date:	Description:

Accu-Steel
FABRIC COVERED BUILDING SOLUTIONS
1-877-338-6936
P.O. BOX 201
TEMPLETON, IA 51463

Project Name:
Project Location:
Building Description:
Date:
Building Design Code & Loads:

Date:	01/02/2011
Drawn By:	JCB
CAD filename:	
Job Number:	
Bldg. Number:	
Dwg. Number:	CP-06W

J:\JARED TRANSFER 8-12-2011\DRAFTING - TECH SALES\6 DRAFTING TOOLS\GENERIC INSTALL CAD\GENERIC.DWG

HIGH PROFILE BUILDING
MAIN COVER GROUND MOUNT LAYOUT

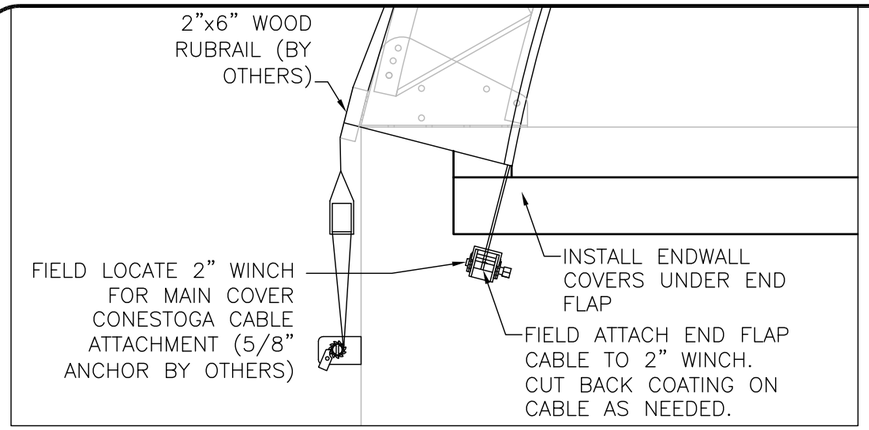

END FLAP DETAIL

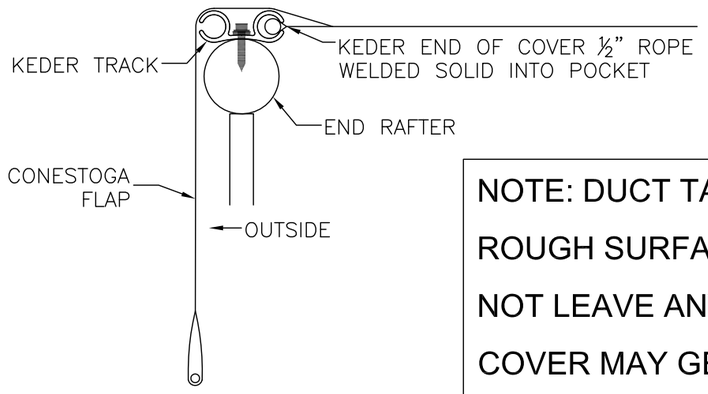

KEDER FLAP DETAIL
(PREVAILING WIND END)

NOTE: DUCT TAPE ALL RAFTER JOINTS AND ANY ROUGH SURFACES BEFORE PULLING COVERS. DO NOT LEAVE ANY EXPOSED, SHARP POINTS OR COVER MAY GET DAMAGED DURING OR AFTER INSTALLATION.

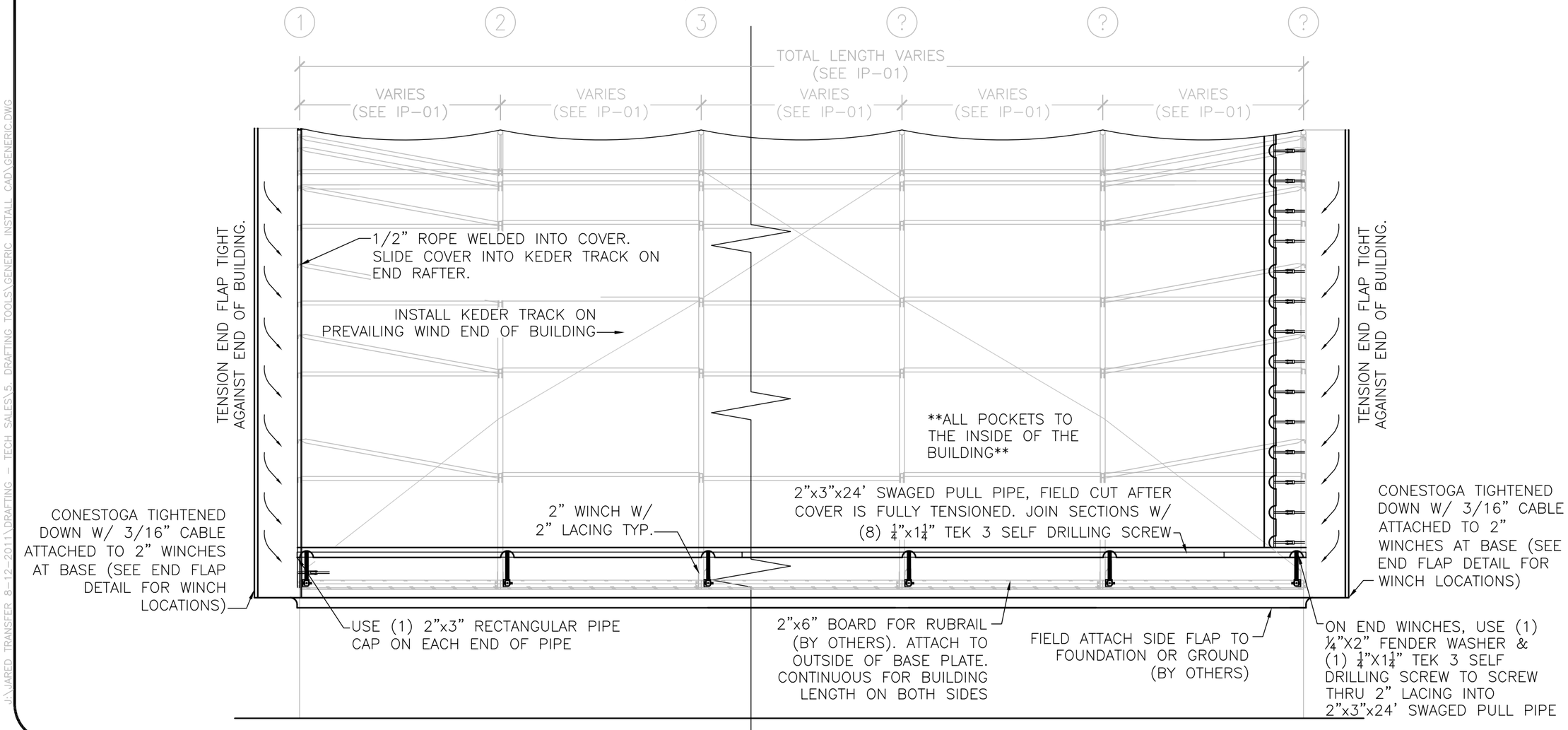

THIS DOCUMENT CONTAINS INFORMATION PROPRIETARY TO ACCU-STEEL INC. IT SHALL NOT BE REPRODUCED, USED, OR DISCLOSED WITHOUT PRIOR WRITTEN PERMISSION OF ACCU-STEEL INC.

Rev.	Date:	Description:

Rev.	Date:	Description:

Accu-Steel
FABRIC COVERED BUILDING SOLUTIONS
1-877-338-6936
P.O. BOX 201
TEMPLETON, IA 51463

Project Name:
Project Location:
Building Description:
Date:
Building Design Code & Loads:

Date:	01/02/2011
Drawn By:	JCB
CAD filename:	
Job Number:	
Bldg. Number:	
Dwg. Number:	CP-06G

I:\JARED TRANSFER 8-12-2011\DRAFTING - TECH SALES\5. DRAFTING TOOLS\GENERIC INSTALL CAD\GENERIC.DWG

MULTIPLE MAIN COVER JOINT DETAIL

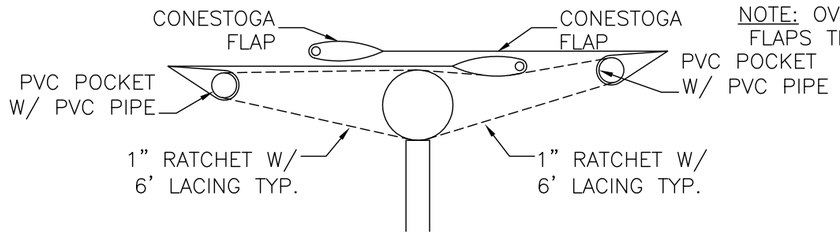

NOTE: OVERLAP COVERS AND TENSION END FLAPS TIGHT AGAINST THE OTHER COVER.

NOTE: DUCT TAPE ALL RAFTER JOINTS AND ANY ROUGH SURFACES BEFORE PULLING COVERS. DO NOT LEAVE ANY EXPOSED, SHARP POINTS OR COVER MAY GET DAMAGED DURING OR AFTER INSTALLATION.

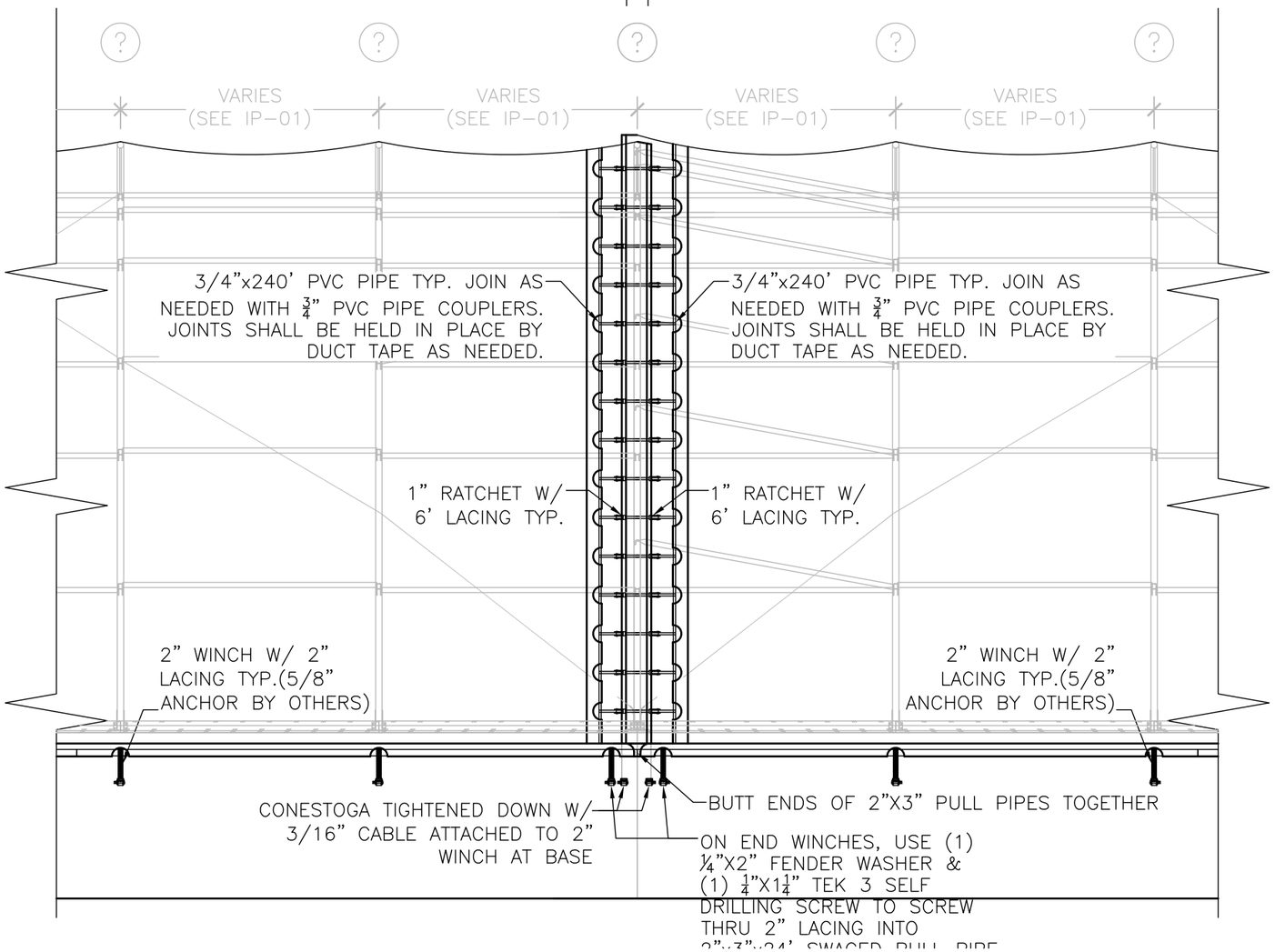

THIS DOCUMENT CONTAINS INFORMATION PROPRIETARY TO ACCU-STEEL INC. IT SHALL NOT BE REPRODUCED, USED, OR DISCLOSED WITHOUT PRIOR WRITTEN PERMISSION OF ACCU-STEEL INC.

Rev.	Date:	Description:

Rev.	Date:	Description:

Accu-Steel
FABRIC COVERED BUILDING SOLUTIONS
1-877-338-6936
P.O. BOX 201
TEMPLETON, IA 51463

Project Name:
Project Location:
Building Description:
Date:
Building Design Code & Loads:

Date:	01/02/2011
Drawn By:	JCB
CAD filename:	
Job Number:	
Bldg. Number:	
Dwg. Number:	

CP-01C

J:\JARED TRANSFER 8-12-2011\DRAFTING - TECH SALES\5 DRAFTING TOOLS\GENERIC INSTALL CAD\GENERIC.DWG

SOLID END COVER WALL MOUNT LAYOUT

NOTE: DUCT TAPE ALL RAFTER JOINTS AND ANY ROUGH SURFACES BEFORE PULLING COVERS. DO NOT LEAVE ANY EXPOSED, SHARP POINTS OR COVER MAY GET DAMAGED DURING OR AFTER INSTALLATION.

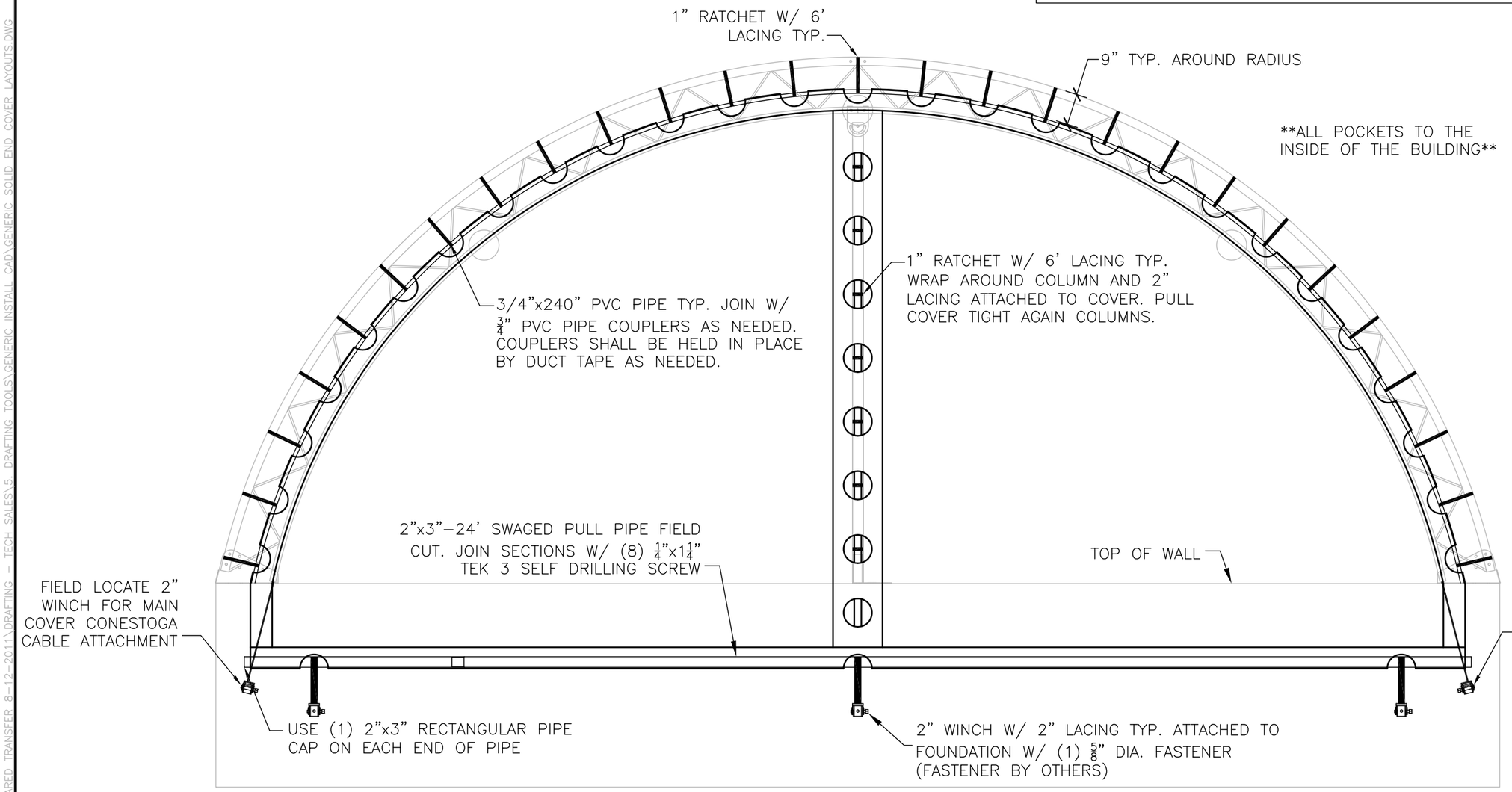

THIS DOCUMENT CONTAINS INFORMATION PROPRIETARY TO ACCU-STEEL INC. IT SHALL NOT BE REPRODUCED, USED, OR DISCLOSED WITHOUT PRIOR WRITTEN PERMISSION OF ACCU-STEEL INC.

Rev.	Date:	Description:

Rev.	Date:	Description:

Accu-Steel
FABRIC COVERED BUILDING SOLUTIONS
1-877-338-6936
P.O. BOX 201
TEMPLETON, IA 51463

Project Name:
Project Location:
Building Description:
Date:
Building Design Code & Loads:

Date:	12/19/2010
Drawn By:	JCB
CAD filename:	
Job Number:	
Bldg. Number:	
Dwg. Number:	CP-02W

J:\JARED TRANSFER 8_12_2011\DRAFTING - TECH SALES\5. DRAFTING TOOLS\GENERIC INSTALL CAD\GENERIC SOLID END COVER LAYOUTS.DWG

SOLID END COVER GROUND MOUNT LAYOUT

NOTE: DUCT TAPE ALL RAFTER JOINTS AND ANY ROUGH SURFACES BEFORE PULLING COVERS. DO NOT LEAVE ANY EXPOSED, SHARP POINTS OR COVER MAY GET DAMAGED DURING OR AFTER INSTALLATION.

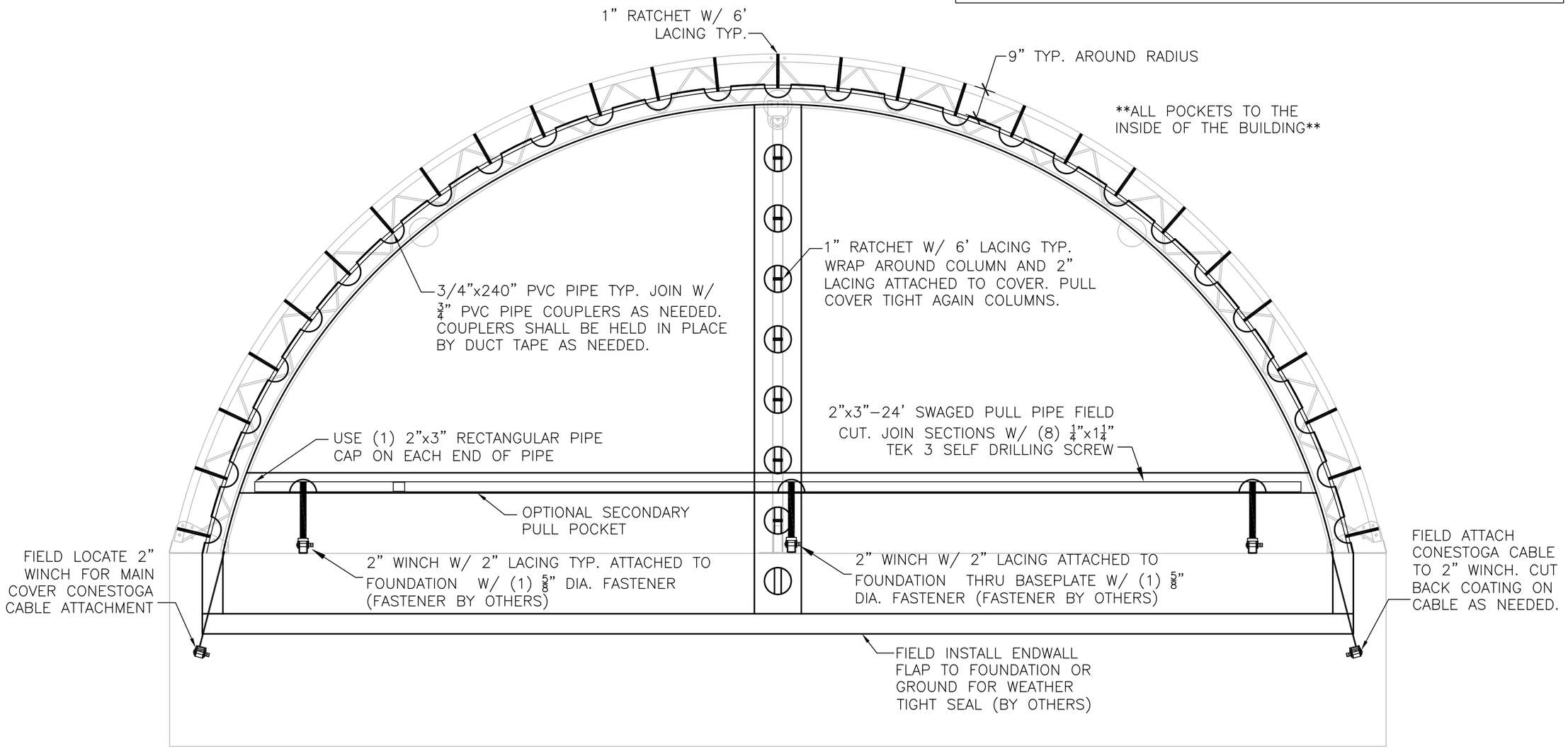

THIS DOCUMENT CONTAINS INFORMATION PROPRIETARY TO ACCU-STEEL INC. IT SHALL NOT BE REPRODUCED, USED, OR DISCLOSED WITHOUT PRIOR WRITTEN PERMISSION OF ACCU-STEEL INC.

Rev.	Date:	Description:

Rev.	Date:	Description:

Accu-Steel
FABRIC COVERED BUILDING SOLUTIONS
1-877-338-6936
P.O. BOX 201
TEMPLETON, IA 51463

Project Name:
Project Location:
Building Description:
Date:
Building Design Code & Loads:

Date:	12/19/2010
Drawn By:	JCB
CAD filename:	
Job Number:	
Bldg. Number:	
Dwg. Number:	CP-02G

J:\SHARED TRANSFER 8_12_2011\DRAFTING - TECH SALES\5. DRAFTING TOOLS\GENERIC INSTALL CAD\GENERIC SOLID END COVER LAYOUTS.DWG

DOOR OPENING END COVER WALL MOUNT LAYOUT

NOTE: DUCT TAPE ALL RAFTER JOINTS AND ANY ROUGH SURFACES BEFORE PULLING COVERS. DO NOT LEAVE ANY EXPOSED, SHARP POINTS OR COVER MAY GET DAMAGED DURING OR AFTER INSTALLATION.

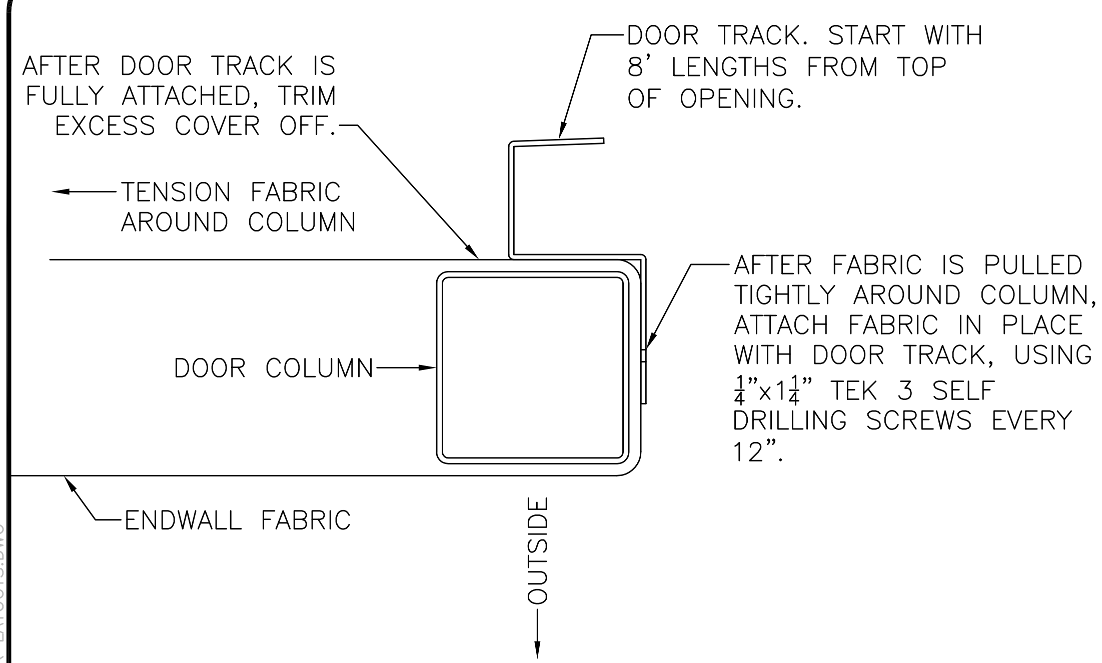

GATHER DOOR KIT COLUMN OPENING ATTACHMENT

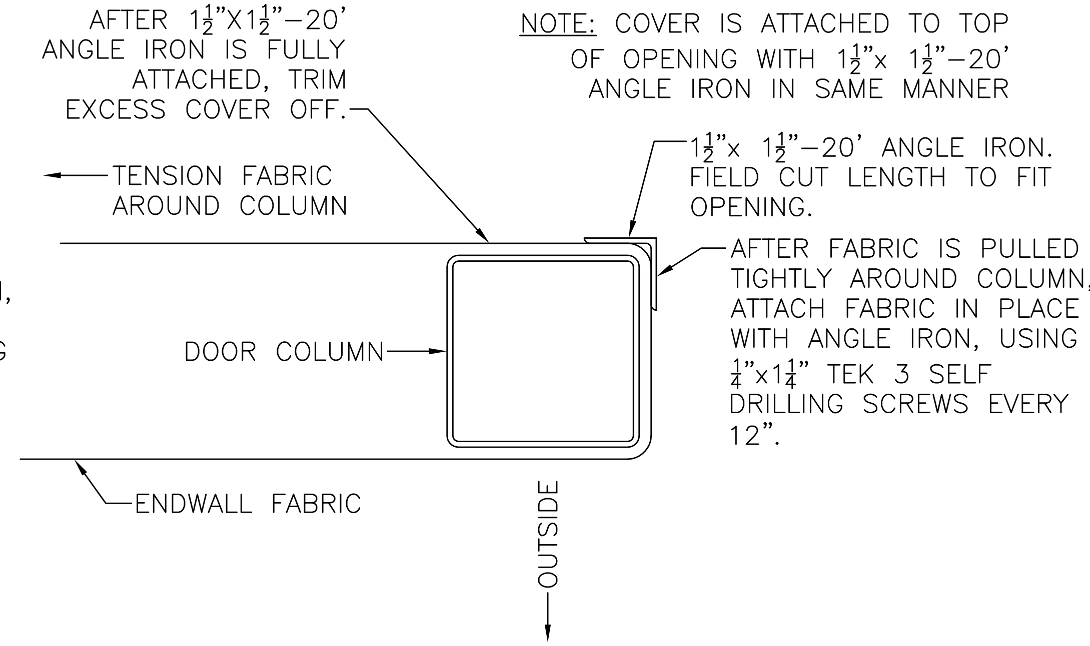

DOOR OPENING ONLY COLUMN OPENING ATTACHMENT

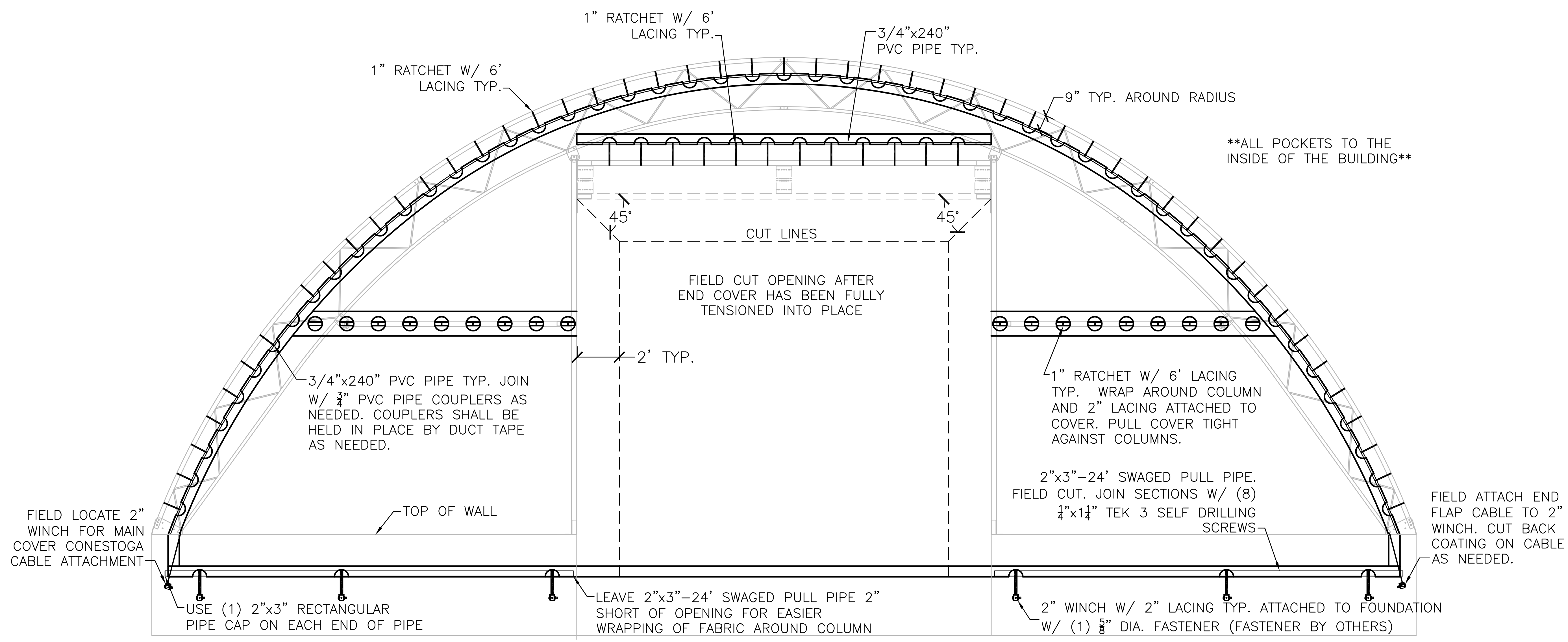

THIS DOCUMENT CONTAINS INFORMATION PROPRIETARY TO ACCU-STEEL INC. IT SHALL NOT BE REPRODUCED, USED, OR DISCLOSED WITHOUT PRIOR WRITTEN PERMISSION OF ACCU-STEEL INC.

Rev.	Date:	Description:

Accu-Steel — Fabric Covered Building Solutions
1-877-338-6936
P.O. BOX 201
TEMPLETON, IA 51463

Project Name:
Project Location:
Building Description:
Date:
Building Design Code & Loads:

Date:	01/02/2011
Drawn By:	JCB
CAD filename:	
Job Number:	
Bldg. Number:	
Dwg. Number:	CP-03W

J:\JARED TRANSFER 8-12-2011\DRAFTING - TECH SALES\5. DRAFTING TOOLS\GENERIC INSTALL CAD\GENERIC DOOR END COVER LAYOUTS.DWG

DOOR OPENING END COVER GROUND MOUNT LAYOUT

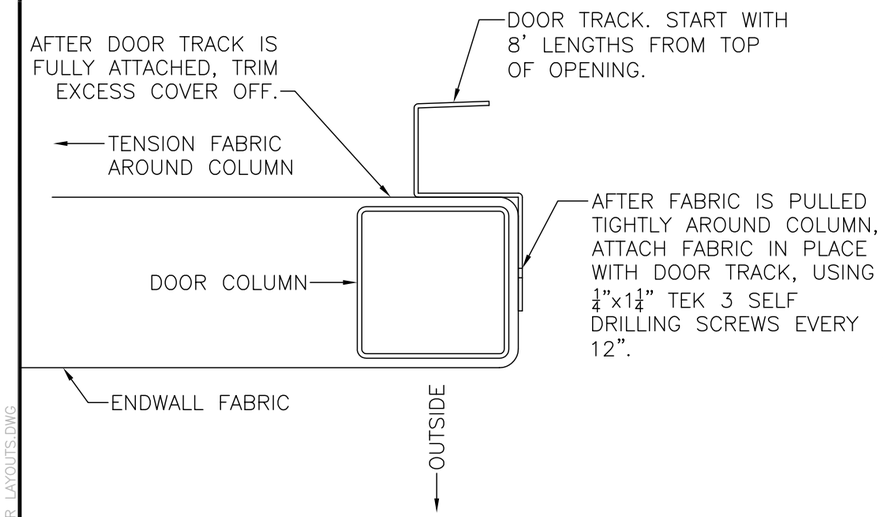

GATHER DOOR KIT COLUMN OPENING ATTACHMENT

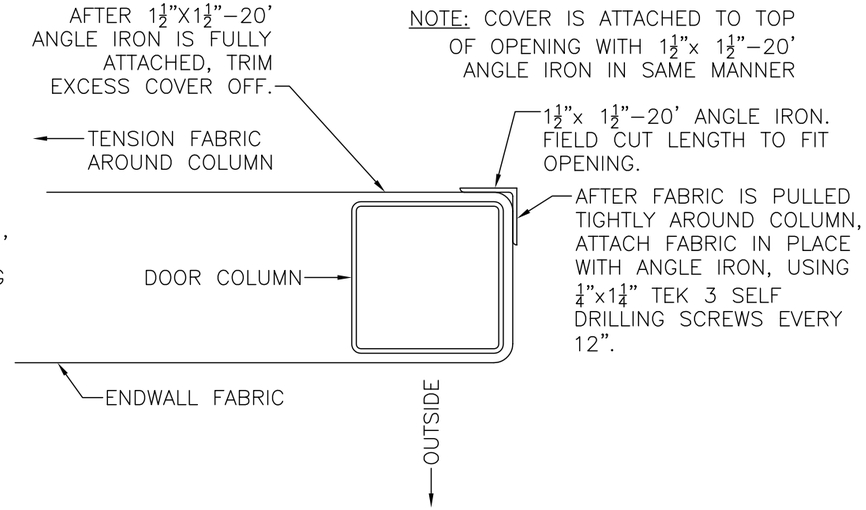

DOOR OPENING ONLY COLUMN OPENING ATTACHMENT

NOTE: DUCT TAPE ALL RAFTER JOINTS AND ANY ROUGH SURFACES BEFORE PULLING COVERS. DO NOT LEAVE ANY EXPOSED, SHARP POINTS OR COVER MAY GET DAMAGED DURING OR AFTER INSTALLATION.

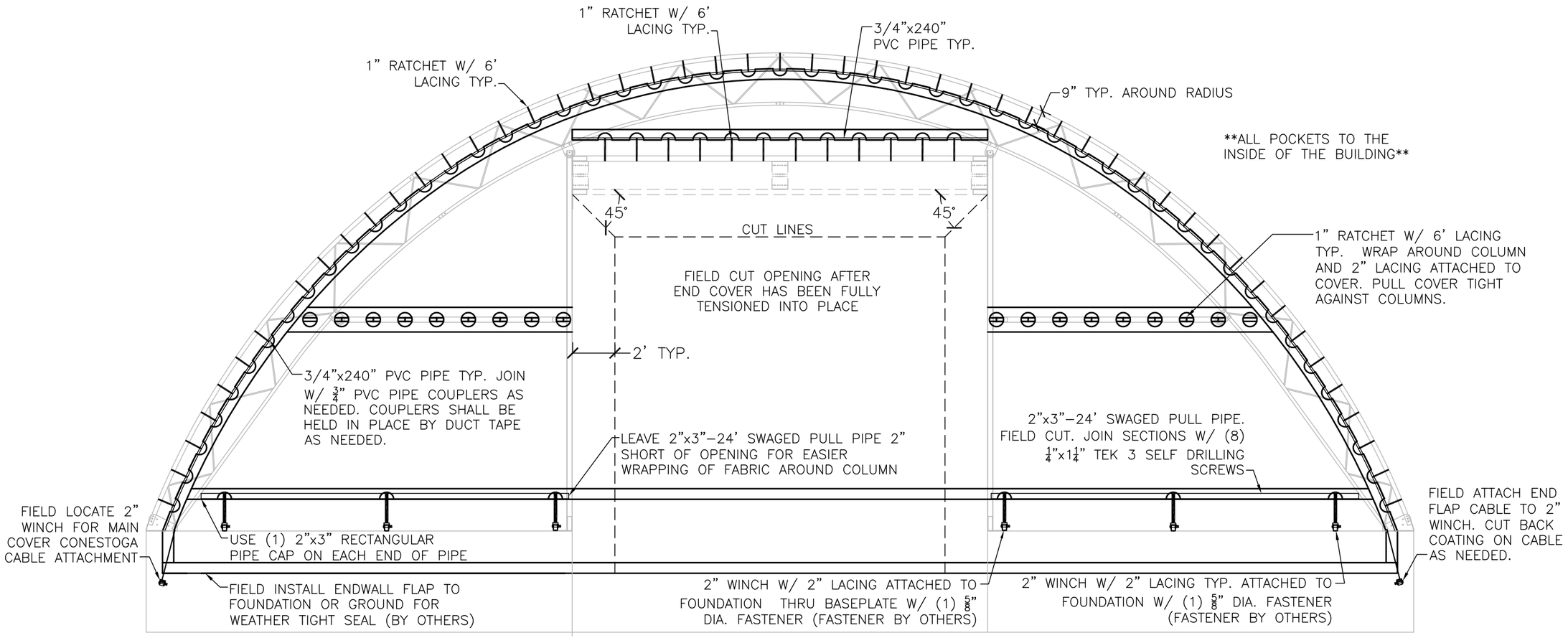

THIS DOCUMENT CONTAINS INFORMATION PROPRIETARY TO ACCU-STEEL INC. IT SHALL NOT BE REPRODUCED, USED, OR DISCLOSED WITHOUT PRIOR WRITTEN PERMISSION OF ACCU-STEEL INC.

Rev.	Date:	Description:

Rev.	Date:	Description:

Accu-Steel
FABRIC COVERED BUILDING SOLUTIONS
1-877-338-6936
P.O. BOX 201
TEMPLETON, IA 51463

Project Name:
Project Location:
Building Description:
Date:
Building Design Code & Loads:

Date:	01/02/2011
Drawn By:	JCB
CAD filename:	
Job Number:	
Bldg. Number:	
Dwg. Number:	CP-03G

J:\JARED TRANSFER 8_12_2011\DRAFTING - TECH SALES\5. DRAFTING TOOLS\GENERIC INSTALL CAD\GENERIC DOOR END COVER LAYOUTS.DWG

WALK DOOR DETAILS

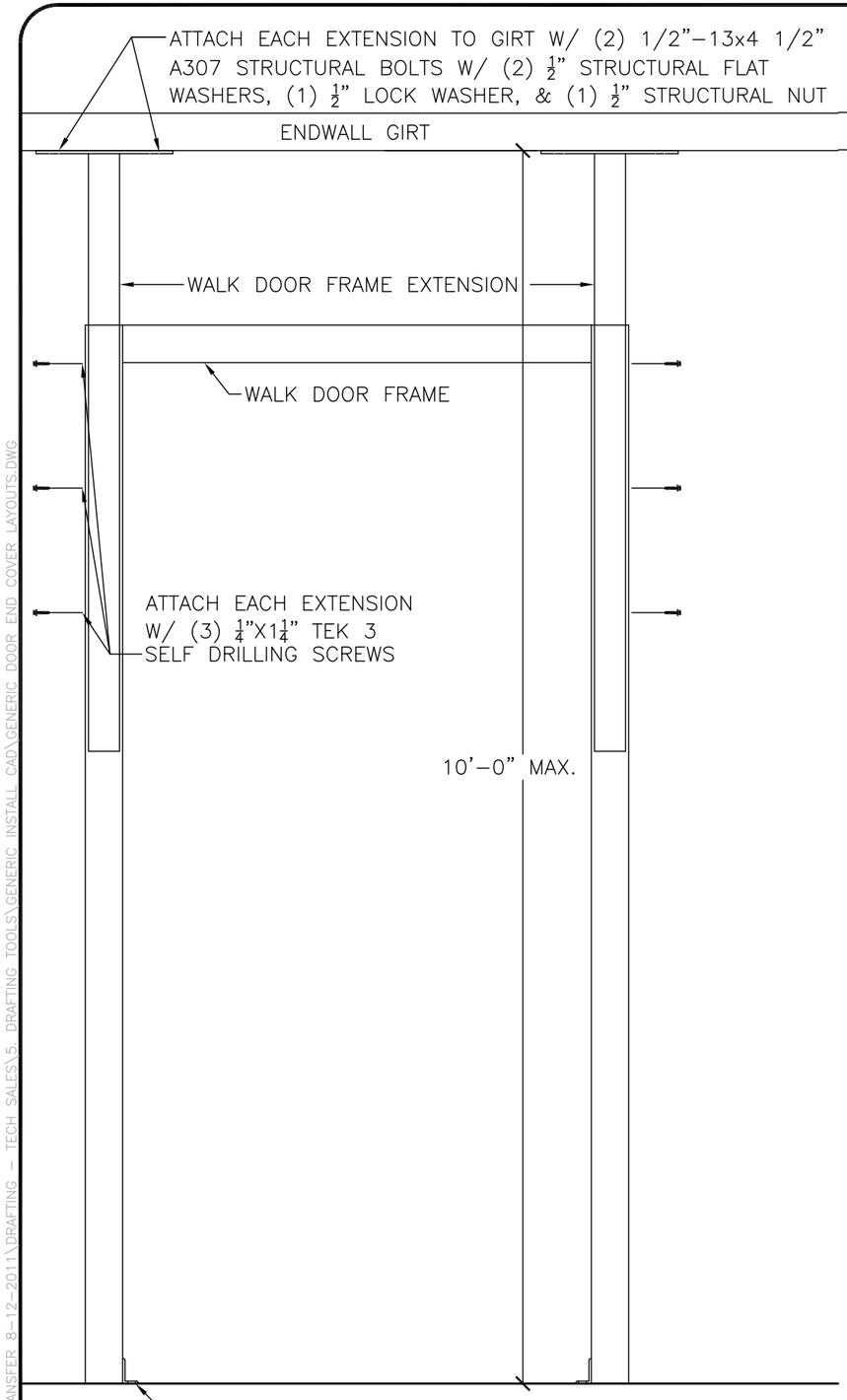

WALK DOOR FRAME INSTALL

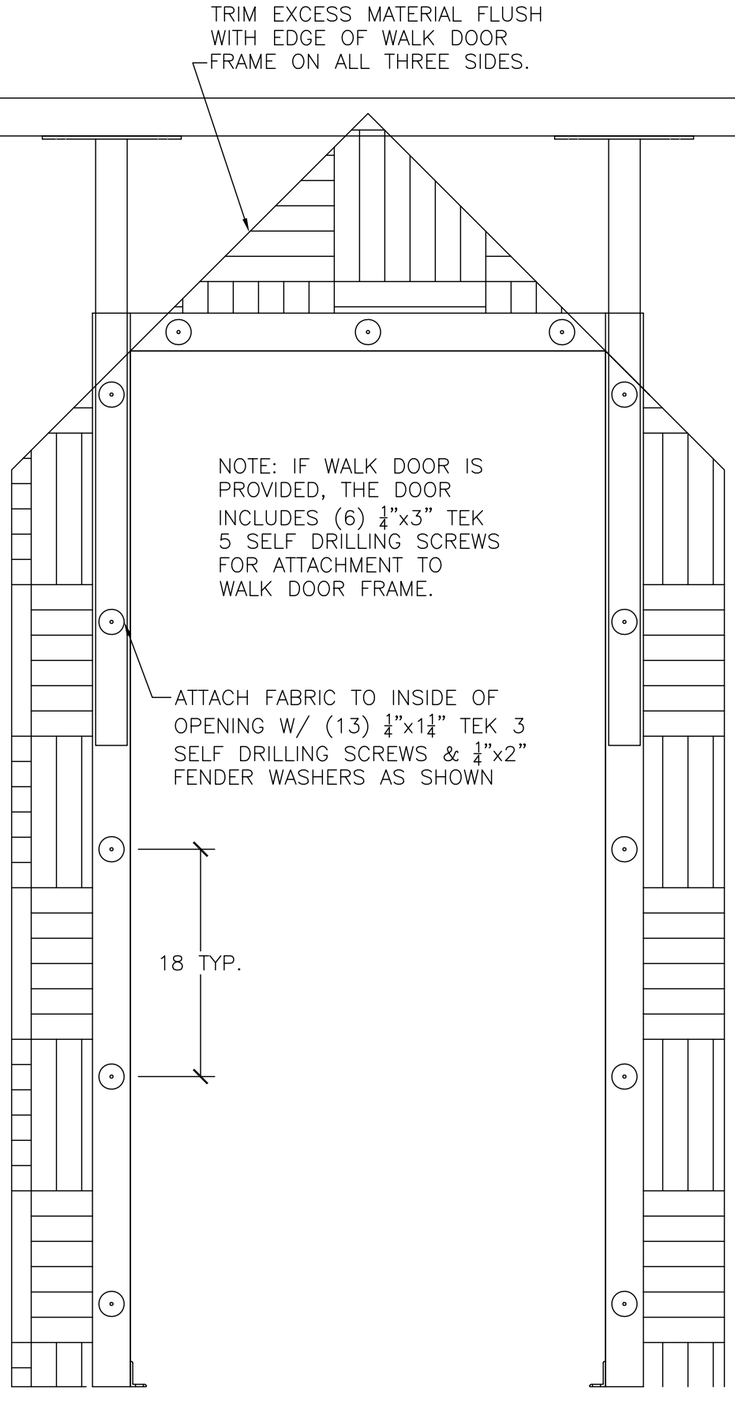

INSIDE VIEW FABRIC ATTACHMENT

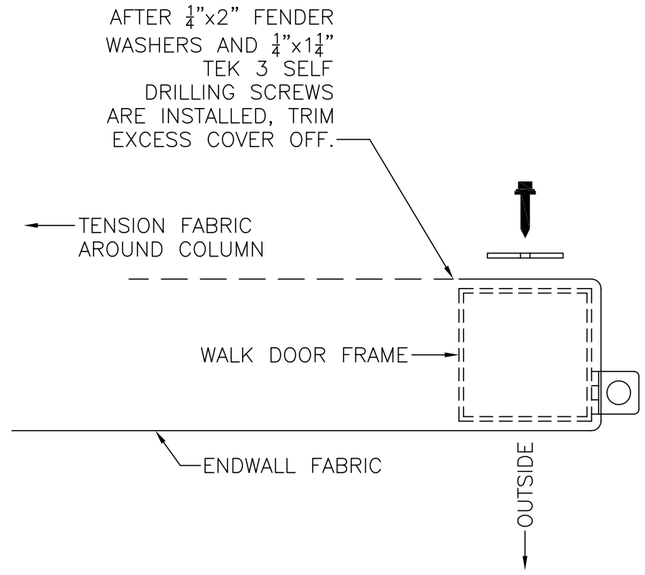

TOP VIEW FABRIC ATTACHMENT

THIS DOCUMENT CONTAINS INFORMATION PROPRIETARY TO ACCU-STEEL INC. IT SHALL NOT BE REPRODUCED, USED, OR DISCLOSED WITHOUT PRIOR WRITTEN PERMISSION OF ACCU-STEEL INC.

Rev.	Date:	Description:

Accu-Steel
FABRIC COVERED BUILDING SOLUTIONS
1-877-338-6936
P.O. BOX 201
TEMPLETON, IA 51463

Project Name:
Project Location:
Building Description:
Date:
Building Design Code & Loads:

Date: 01/02/2011
Drawn By: JCB
CAD filename:
Job Number:
Bldg. Number:
Dwg. Number:

CP-04A

I:\JARED TRANSFER 8-12-2011\DRAFTING - TECH SALES\5 DRAFTING TOOLS\GENERIC INSTALL CAD\GENERIC DOOR END COVER LAYOUTS.DWG

FIELD CUT 2"x3"–20' DOOR PIPE LENGTH FOR DOOR OPENING WIDTHS	
OPENING WIDTH	2"x3"–20' DOOR PIPE CUT LENGTH
19'–7½"	20'–0" (240")
16'–0"	16'–4½" (196½")
14'–0"	14'–4½" (172½")
12'–0"	12'–4½" (148½")
VARIES	OPENING WIDTH + 4½"

**WARNING: OPENING WIDTH MUST BE THE SAME FROM TOP TO BOTTOM. WHILE BEING USED, 2"x3" DOOR PIPES MAY FALL OUT OF DOOR TRACK OR WEDGE IN DOOR TRACK IF

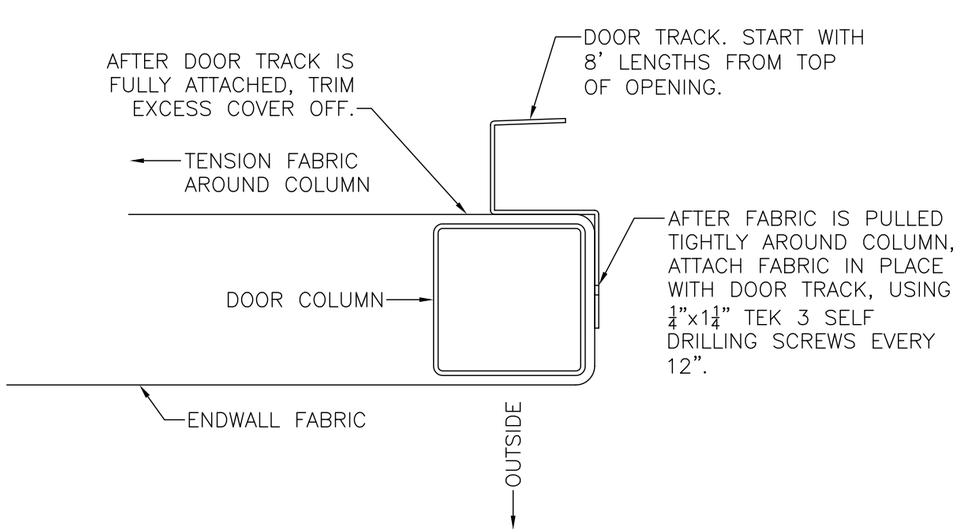

GATHER DOOR OPENING FABRIC ATTACHMENT

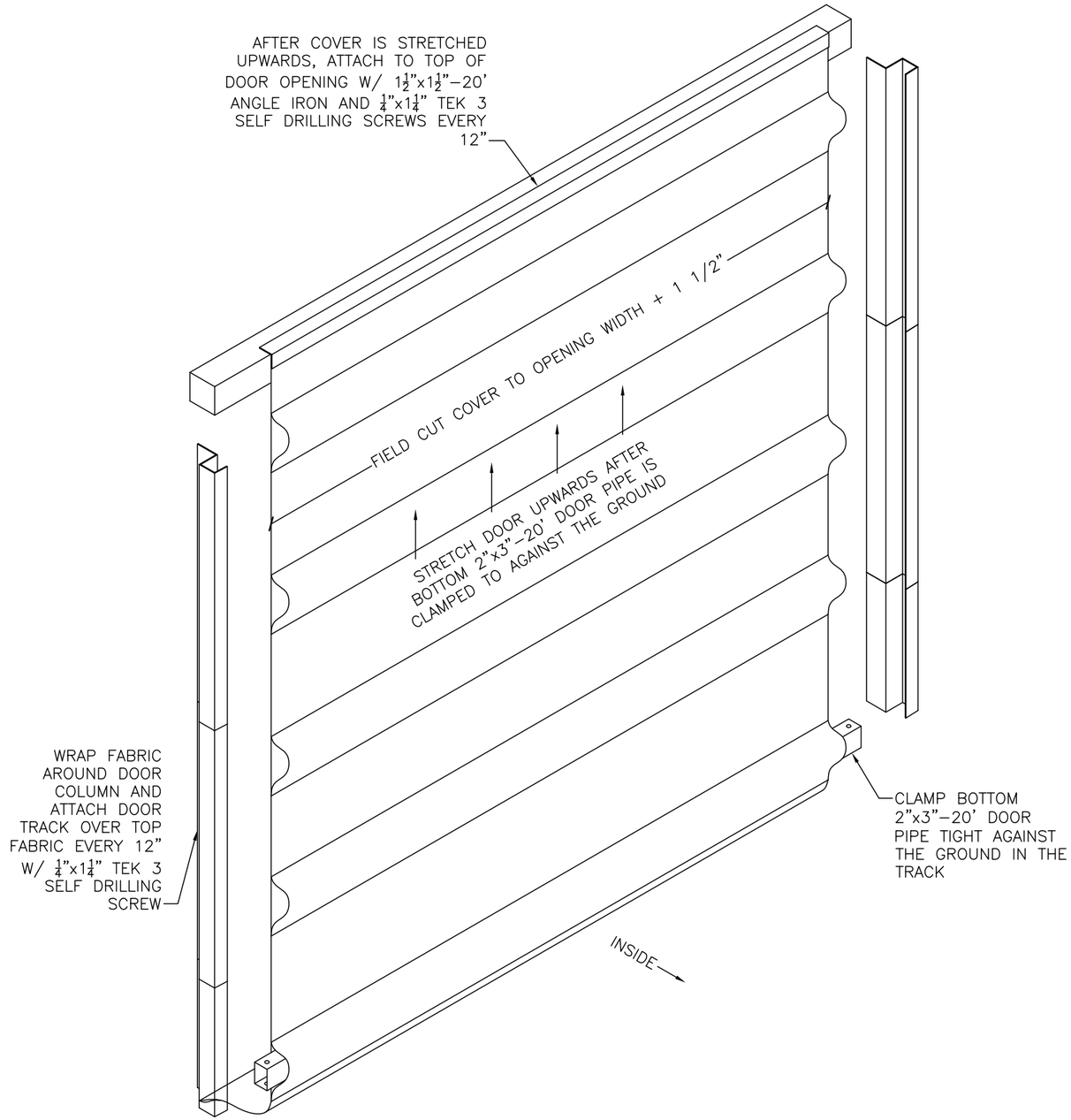

INSIDE VIEW FABRIC ATTACHMENT

THIS DOCUMENT CONTAINS INFORMATION PROPRIETARY TO ACCU-STEEL INC. IT SHALL NOT BE REPRODUCED, USED, OR DISCLOSED WITHOUT PRIOR WRITTEN PERMISSION OF ACCU-STEEL INC.

Rev.	Description:	Date:

Rev.	Description:	Date:

Accu-Steel
FABRIC COVERED BUILDING SOLUTIONS
1-877-338-6936
P.O. BOX 201
TEMPLETON, IA 51463

Project Name:
Project Location:
Building Description:
Date:
Building Design Code & Loads:

Date: 01/02/2011
Drawn By: JCB
CAD filename:
Job Number:
Bldg. Number:
Dwg. Number:

CP-04B

J:\JARED TRANSFER 8-12-2011\DRAFTING - TECH SALES\5 DRAFTING TOOLS\GENERIC INSTALL CAD\GENERIC DOOR END COVER LAYOUTS.DWG

AFTER COVER IS SECURED AT THE TOP, REMOVE CLAMPS FROM BOTTOM PIPE. SLIDE 2"x3"–20' DOOR PIPE INTO THE COVER STARTING FROM THE TOP. SLIDE ONE END INTO THE TRACK AND THEN LIFT AND SET OTHER END INTO THE TRACK ON OPPOSITE SIDE.

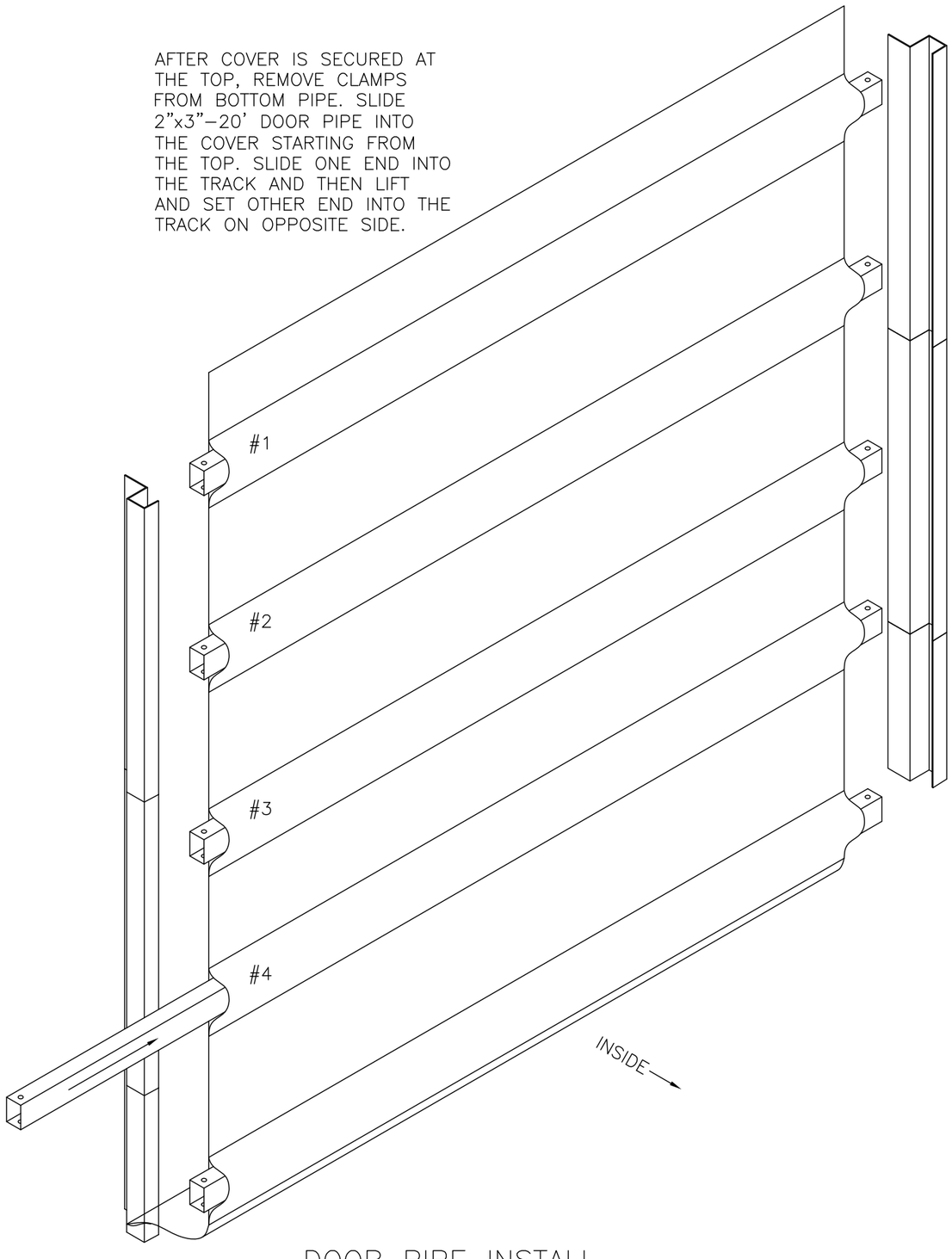

DOOR PIPE INSTALL

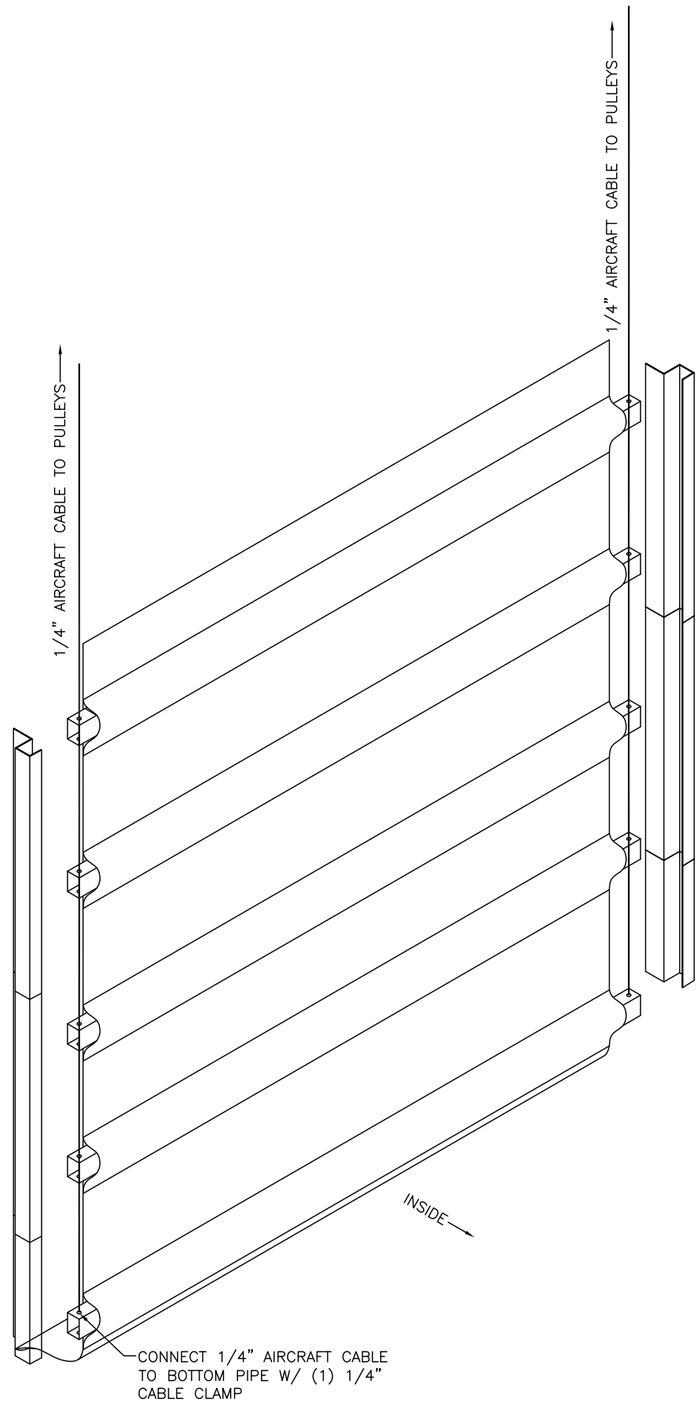

DOOR CABLE ATTACHMENT

THIS DOCUMENT CONTAINS INFORMATION PROPRIETARY TO ACCU-STEEL INC. IT SHALL NOT BE REPRODUCED, USED, OR DISCLOSED WITHOUT PRIOR WRITTEN PERMISSION OF ACCU-STEEL INC.

Rev.	Description:	Date:

Rev.	Description:	Date:

Accu-Steel
FABRIC COVERED BUILDING SOLUTIONS
1-877-338-6936
P.O. BOX 201
TEMPLETON, IA 51463

Project Name:
Project Location:
Building Description:
Date:
Building Design Code & Loads:

Date:	01/02/2011
Drawn By:	JCB
CAD filename:	
Job Number:	
Bldg. Number:	
Dwg. Number:	**CP-04C**

J:\JARED TRANSFER 8_12_2011\DRAFTING - TECH SALES\5. DRAFTING TOOLS\GENERIC INSTALL CAD\GENERIC DOOR END COVER LAYOUTS.DWG

FIELD LOCATE HORIZONTAL PULLEYS SO THAT CABLE RUNS AS STRAIGHT OUT OF DOOR PIPE AS POSSIBLE

ATTACH LEFT AND RIGHT DOOR CABLES TOGETHER BEYOND HORIZONTAL PULLEYS W/ (2) $\frac{1}{4}$" CABLE CLAMPS

HORIZONTAL PULLEY

1/4" AIRCRAFT CABLE

ATTACH EACH PULLEY TO THE PLATES W/ (3) $\frac{5}{16}$"–18x$1\frac{1}{2}$" GRADE 5 BOLTS OR TO COLUMNS W/ $\frac{1}{4}$"x$1\frac{1}{4}$" TEK 3 SELF DRILLING SCREWS

TO BOTTOM 2"x3"–20' DOOR PIPE

TO BOTTOM 2"x3"–20' DOOR PIPE

TO BRAKE WINCH

FIELD LOCATE 1500 LB. BRAKE WINCH W/ BRAKE WINCH BRACKET. ATTACH BRAKE WINCH TO BRACKET W/ (3) 3/8"–16x$1\frac{1}{2}$" GRADE 5 BOLTS

PULLEY AND BRAKE WINCH INSTALL

THIS DOCUMENT CONTAINS INFORMATION PROPRIETARY TO ACCU-STEEL INC. IT SHALL NOT BE REPRODUCED, USED, OR DISCLOSED WITHOUT PRIOR WRITTEN PERMISSION OF ACCU-STEEL INC.

Rev.	Description:	Date:

Accu-Steel
FABRIC COVERED BUILDING SOLUTIONS
1-877-338-6936
P.O. BOX 201
TEMPLETON, IA 51463

Project Name:
Project Location:
Building Description:
Date:
Building Design Code & Loads:

Date: 01/02/2011
Drawn By: JCB
CAD filename:
Job Number:
Bldg. Number:
Dwg. Number:

CP-04D

J:\JARED TRANSFER 8-12-2011\DRAFTING - TECH SALES\5. DRAFTING TOOLS\GENERIC INSTALL CAD\GENERIC_DOOR_END_COVER_LAYOUTS.DWG

Building Width	40' HP
Rafter Centers	12'
Windload (MPH)	90
Snow load (GSL)	61
Windload IF	0.87
Snow load IF	0.8

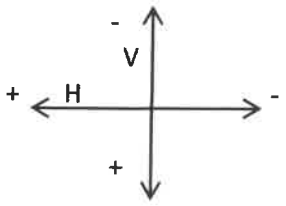

*Reactions are in Kips

**Windload can act in opposite direction

	A		B	
	H	V	H	V
1) DL+SL (BALANCED)	3.177	8.144	-3.177	8.145
2) DL+SL (UNBALANCED)	1.973	2.785	-1.973	8.907
3) DL+0.75WL (POS)+SL (BALANCED)	0.111	2.847	-2.439	3.809
4) DL+0.75WL (NEG)+SL (BALANCED)	0.040	3.655	-2.369	4.620
5) DL+0.75WL (POS)+SL (UNBALANCED)	-0.798	-1.178	-1.530	4.386
6) DL+0.75WL (NEG)+SL (UNBALANCED)	-0.869	-0.368	-1.460	5.195
7) DL+WL (POS)	-2.977	-4.105	-0.128	-2.853
8) DL+WL (NEG)	-3.071	-3.029	-0.033	-1.772
9) 0.6DL+WL (POS)	-3.010	-4.242	-0.095	-2.990
10) 0.6DL+WL (NEG)	-3.104	-3.165	0.000	-1.909
11) DL	0.082	0.342	-0.082	0.342
12) SL (BALANCED)	3.095	7.803	-3.095	7.803
13) SL (UNBALANCED)	1.890	2.440	-1.890	8.566
14) WL (POS)	-3.059	-4.447	-0.045	-3.195
15) WL (NEG)	-3.153	-3.370	0.049	-2.114

Min Compressive Strength 6000 psi 28 days
Reinforced to ASTM and ACI Standards

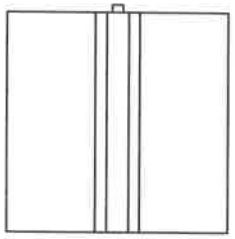

2" Deep
Tongue and Groove Assembly

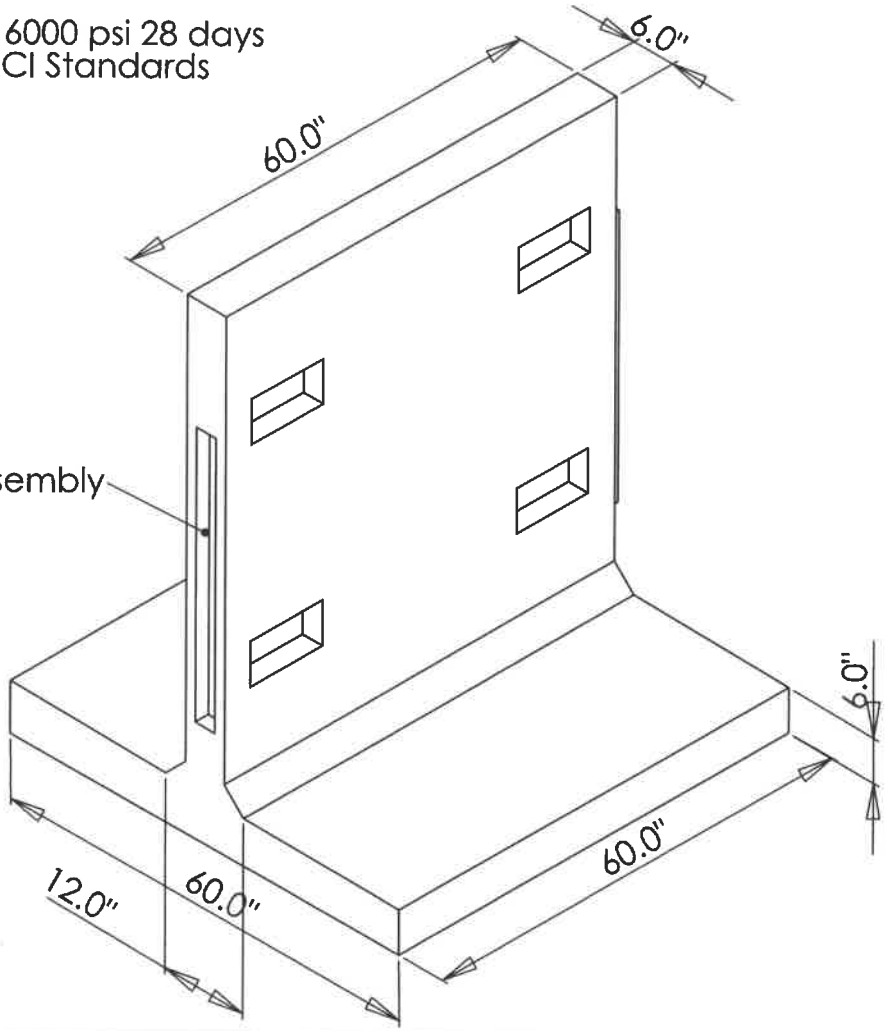

		UNLESS OTHERWISE SPECIFIED:		NAME	DATE
		DIMENSIONS ARE IN INCHES TOLERANCES: FRACTIONAL ± ANGULAR: MACH ± BEND ± TWO PLACE DECIMAL ± THREE PLACE DECIMAL ±	DRAWN	AJA	9/11
			CHECKED		
			ENG APPR.		
			MFG APPR.		
		INTERPRET GEOMETRIC TOLERANCING PER:	Q.A.		
		MATERIAL	COMMENTS:		
NEXT ASSY	USED ON	FINISH			
APPLICATION		DO NOT SCALE DRAWING			

PROPRIETARY AND CONFIDENTIAL
THE INFORMATION CONTAINED IN THIS DRAWING IS THE SOLE PROPERTY OF DALMARAY. ANY REPRODUCTION IN PART OR AS A WHOLE WITHOUT THE WRITTEN PERMISSION OF DALMARAY IS PROHIBITED.

TITLE:

6 ' BUNKER PANEL

SIZE	DWG. NO.	REV
A	6B1	

SCALE: 1:50 WEIGHT: SHEET 1 OF 1

5 4 3 2 1

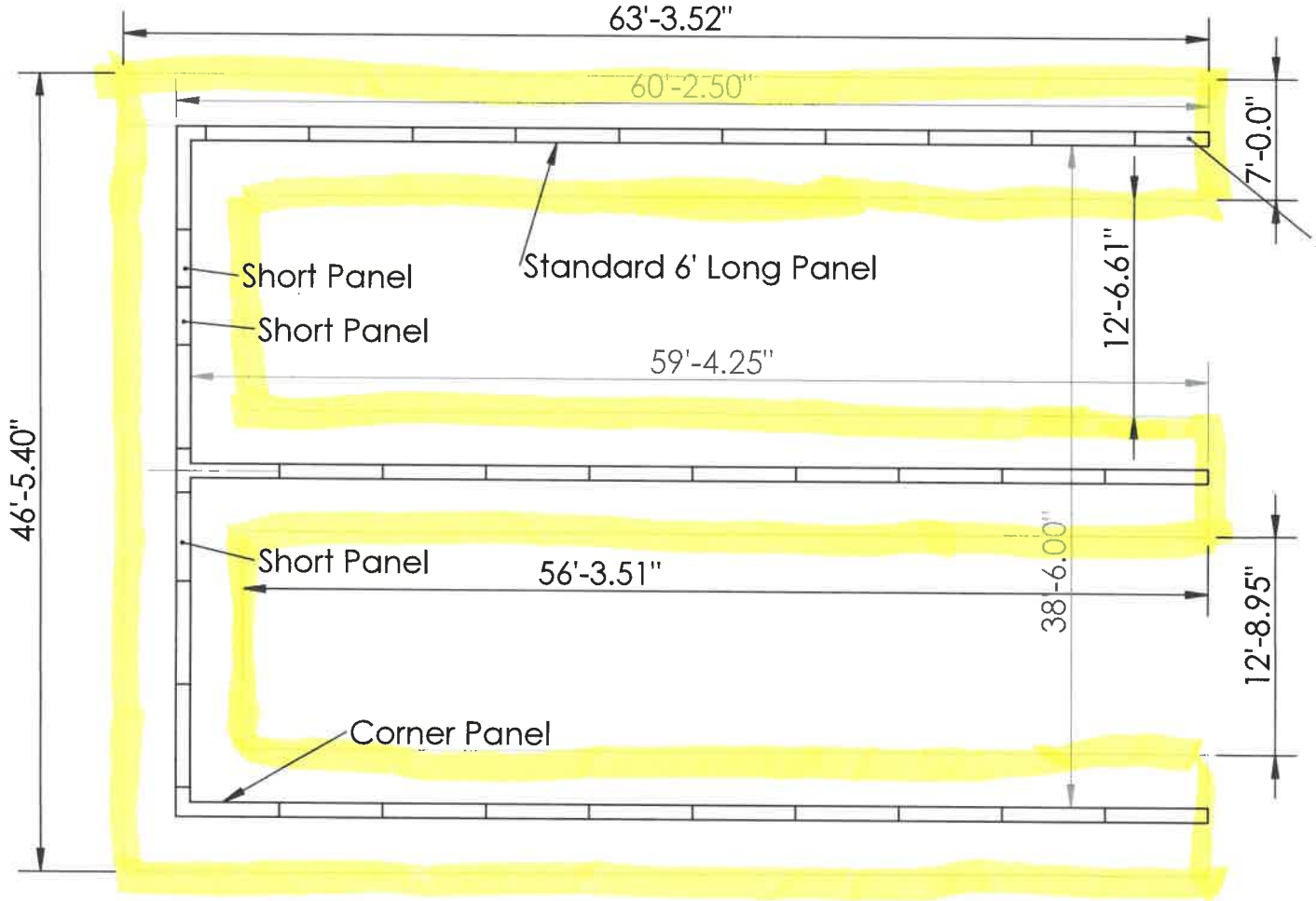

		NAME	DATE
UNLESS OTHERWISE SPECIFIED:			
DIMENSIONS ARE IN INCHES TOLERANCES: FRACTIONAL ANGULAR: MACH BEND TWO PLACE DECIMAL THREE PLACE DECIMAL	DRAWN		
	CHECKED		
	ENG APPR.		
	MFG APPR.		
INTERPRET GEOMETRIC TOLERANCING PER:	Q.A.		
MATERIAL	COMMENTS:		
FINISH			
NEXT ASSY / USED ON			
APPLICATION / DO NOT SCALE DRAWING			

TITLE:

SIZE A | DWG. NO. | REV

Vance AFB Layout

SCALE: 1:256 | WEIGHT: | SHEET 1 OF 1

PROPRIETARY AND CONFIDENTIAL

THE INFORMATION CONTAINED IN THIS DRAWING IS THE SOLE PROPERTY OF <INSERT COMPANY NAME HERE>. ANY REPRODUCTION IN PART OR AS A WHOLE WITHOUT THE WRITTEN PERMISSION OF <INSERT COMPANY NAME HERE> IS PROHIBITED.

PROPOSED FACILITY SITING
SLICER PIT SHELTER