SPECIAL PACKAGING INSTRUCTION

CODE ID	SPI NO. (TPO)
98747	F01-153-2153
	SHEET 1 OF 5

PART OR DRAWING NO.	NATIONAL STOCK NO.	CURRENT REV
320-4-45551-101	1560-01-153-2153 WF	G

ITEM NOMENCLATURE	ORIGINAL DATE
CELL, FUEL, AIRCRAFT	85259

ILL. D. NAY
P.S. K. RESTORFF
CHK. S. PEELER
AUTH. N. CORONADO

MILITARY PRESERVATION IAW MIL-STD-2073

SERVICEABLE METHOD: 10 [1]
UNSERVICEABLE METHOD: 10 [1]
QUP 001
ICQ 000
CLEANING & DRYING: IAW MIL-STD-2073
PRESERVATIVE: N/A

MARKING IAW MIL-STD-129 [1]

SPECIAL MARKINGS:

A) SPI NO. F01-153-2153
MARK THE SPI NUMBER ON THE IDENTIFICATION SIDE OF CONTAINER.

B) REUSABLE CONTAINER & DUNNAGE DO NOT DESTROY.

C) RUBBER CELL, USE NO HOOKS, DO NOT PUNCTURE BOX WITH NAILS, STAPLES, METAL STRAPPING, ETC.

D) DO NOT REMOVE OR FLEX CELL WHEN AMBIENT TEMP. IS BELOW 18.3 CENTIGRADE, 65 DEGREES FAHRENHEIT

E) NOT FOR OUTSIDE STORAGE, CLIMATE CONTROL REQUIRED

F) ANNUAL INSPECTION AND TESTING REQUIRED

ADDITIONAL SPECIAL MARKINGS:

A) DANGEROUS GOODS IN APPARATUS UN3363

B) TYPE AND FLASH POINT OF FUEL [2]

C) CLASS 9 LABEL

CLOSURE

LEVEL A: IAW: ASTM D6251 (UNNAILED CLOSURE)
LEVEL B: IAW: ASTM D6251 (UNNAILED CLOSURE)

PACKING AS SPECIFIED BELOW AND BILL OF MATERIALS

LEVEL	SPEC	STYLE	TYPE	CL	VRTY	GR	TR
A	ASTM D6251	A	III	2			B
B	ASTM D6251	A	III	2			A

	LEVEL A	LEVEL B
GROSS CU FT	44.647	44.647
GROSS WT LBS	175	175
DESIGN FRAGILITY G	110	110

	LENGTH	WIDTH	DEPTH
CNTR I.D.			
LEVEL A:	47	45	28
LEVEL B:	47	45	28
CNTR O.D.			
LEVEL A:	49	47	33 1/2
LEVEL B:	49	47	33 1/2
ITEM DIM	45	42	26
ITEM WT.	20 LBS		

REVISIONS		
LTR	DESCRIPTION	DATE
G	UPDATED MARKINGS, ADDED DISTRIBUTION STATEMENT AND DESTRUCTION NOTICE	18031

CAUTION:
ITEMS CONTAINING RESIDUAL FUEL ARE CONSIDERED HAZARDOUS MATERIALS AND MUST BE PACKED IAW THE APPROPRIATE HAZARDOUS MATERIAL REGULATION AND CERTIFIED BY AUTHORIZED HAZARDOUS MATERIAL PERSONNEL

DISTRIBUTION STATEMENT D: DISTRIBUTION AUTHORIZED TO DEPARTMENT OF DEFENSE AND U.S. DOD CONTRACTORS ONLY, ADMINISTRATIVE OR OPERATIONAL USE, 29 JANUARY 2018. OTHER REQUESTS FOR THIS DOCUMENT SHALL BE REFERRED TO 406 SCMS/GULAA, (PACKAGING DIVISION), HILL AFB, UTAH 84056.

DESTRUCTION NOTICE: FOLLOW THE PROCEDURES IN DOD 5220.22-M, NATIONAL INDUSTRIAL SECURITY PROGRAM OPERATING MANUAL (NISPOM), SECTION 5-705, OR DOD 5200.1-R, INFORMATION SECURITY PROGRAM, CHAPTER VI. FOR UNCLASSIFIED, LIMITED DOCUMENTS, DESTROY BY ANY METHOD THAT WILL PREVENT DISCLOSURE OF CONTENTS OR RECONSTRUCTION OF THE DOCUMENT.

SPECIAL PACKAGING INSTRUCTION	CODE ID 98747	SPI NO. (TPO) F01-153-2153
ITEM NOMENCLATURE CELL, FUEL, AIRCRAFT		SHEET 2 OF 5

P/N	QTY REQD	NOMENCLATURE OR DESCRIPTION	SIZE: (INCHES UNLESS SPECIFIED) TOLERANCES ON FRAC. ± 1/8, DECIMAL ± .10, ANGLES ± 1°	MATERIAL SPECIFICATION	
-14	3	STRAPPING, STEEL	3/4 X .015 X AS REQUIRED	ASTM D3953 TYPE 1, RD, FINISH A	
-13	1	LINER, TOP	41 3/4 X 39 3/4 X 1/8	ASTM D4727 CF, DOM, SW, GRADE 200	3
-12	A/R	TAPE, MASKING	3 X AS REQUIRED	ASTM D6123 TYPE I OR II	6
-11	A/R	BARRIER, ACCESS COVER	AS REQUIRED	MIL-PRF-121 TYPE I	6
-10	7	NYLON CORD	AS REQUIRED	NSN 4020-00-240-2146	5
-9	7	SCREW, EYE	1.56 X .75 X .44	FF-S-88 CLASS 1 GRADE A	5
-8	A/R	MATERIAL, ABSORBENT	AS REQUIRED	A-A-59759 TYPE II	4
-7	A/R	BARRIER, LINER	AS REQUIRED	MIL-PRF-121 TYPE I	4
-6	2	LINER, END	44 3/4 X 27 1/4 X 1/8	ASTM D4727 CF, DOM, SW, GRADE 200	3
-5	2	LINER, SIDE	46 3/4 X 27 1/4 X 1/8	ASTM D4727 CF, DOM, SW, GRADE 200	3
-4	1	LINER, BOTTOM	46 3/4 X 44 3/4 X 1/8	ASTM D4727 CF, DOM, SW, GRADE 200	3
-3	2	FILLER EDGE CLEAT	1 X 3 (NOM) X 39 3/4	ASTM D6199 CLASS 2	
-2	2	THRU EDGE CLEAT	1 X 3 (NOM) X 46 3/4	ASTM D6199 CLASS 2	
-1	3	SKIDS	4 X 4 (NOM) X 47	ASTM D6199 CLASS 2	

CAUTION NOTICES

NOTICE 1: ASSETS PACKAGED IN ACCORDANCE WITH PREVIOUS EDITIONS OF THIS DO NOT REQUIRE REPACKAGING IF THE INTEGRITY OF THE SPI IS MAINTAINED.

NOTICE 2: SEE SPIRES FOR A COMPLETE LISTING OF NSN's ASSIGNED TO THIS SPI.

NOTICE 3: PACKAGING MATERIAL MAY BE SUBSTITUTED IF IT MEETS THE REQUIREMENTS OF MIL-STD-2073, PROVIDES EQUAL OR BETTER PROTECTION AND THERE IS NO INCREASED COST TO THE GOVERNMENT.

NOTICE 4: OVERSEAS AND FMS PACKAGING MUST MEET THE REQUIREMENTS OF LEVEL A PACKAGING.

INTERNATIONAL STANDARDS FOR PHYTOSANITARY MEASURES
REVISION OF ISPM NO. 15
REVISION OF WOOD PACKAGING MATERIAL FOR INTERNATIONAL TRADE

THE FOLLOWING STATEMENT IS IN COMPLIANCE WITH THE UNITED NATIONS-IMPLEMENTED RESTRICTIONS ON WOOD PACKAGING MATERIAL (WPM). THIS REQUIREMENT IS SPECIFICALLY CONCERNED WITH INVASIVE SPECIES SUCH AS THE PINEWOOD NEMATODE. WPM IS DEFINED AS WOOD PALLETS, SKIDS, LOAD BOARDS, PALLET COLLARS, WOODEN BOXES, REELS, DUNNAGE, CRATES, FRAMES, AND CLEATS. THE STATEMENT BELOW CITES THE REQUIREMENTS IN DETAIL AND COVERS LUMBER FOR BUILDING CONTAINERS AND PALLETS USED FOR DELIVERIES, RESULTING IN SHIPMENTS WORLDWIDE (DIRECT, OR THROUGH AIR LOGISTICS CENTERS (ALC), CONTAINER CONSOLIDATION POINTS (CCP), OR OTHER BASES).

WOODEN LUMBER, WOODEN PALLET AND PACKAGING/CONTAINER STATEMENT:

ALL WOODEN LUMBER, WOODEN PALLETS, AND WOODEN CONTAINERS PRODUCED ENTIRELY OR IN PART OF WOOD PACKAGING MATERIAL (WPM) SHALL BE CONSTRUCTED FROM DEBARKED WOOD IN ADDITION TO THE APPLICATION OF HEAT-TREATED (HT) MATERIAL (HT TO 56 DEGREES CENTIGRADE OR 133 DEGREES FAHRENHEIT FOR 30 MINUTES). CERTIFICATION/MARKING IS REQUIRED BY AN ACCREDITED AGENCY RECOGNIZED BY THE AMERICAN LUMBER STANDARDS COMMITTEE (ALSC). FOR REFERENCE DOCUMENTATION, SEE LATEST REVISION OF "INTERNATIONAL STANDARDS FOR PHYTOSANITARY MEASURES (ISPM NO. 15), "REGULATION OF WOOD PACKAGING MATERIAL IN INTERNATIONAL TRADE."

NOTES

1. I.D. TAGS MUST BE STAMPED BY RESPONSIBLE PARTY SIGNIFYING ITEM HAS BEEN PREPARED FOR SHIPMENT/STORAGE IAW APPLICABLE T.0.

2. **IF APPLICABLE:** MARK TYPE AND FLASH POINT OF PURGING FLUID IAW AFI 24-203, AND AFMAN24-204.

3. SECURE REF.-4, -5, -6 AND -13 TO CONTAINER WITH ADHESIVE CONFORMING TO A-A-1936 TYPE II OR EQUAL.

4. LINE ENTIRE CONTAINER WITH BARRIER REF.-7 THEN PLACE ABSORBENT MATERIAL REF.-8 COVERING THE ENTIRE BOTTOM. INSPECT FOR RIPS AND CONTAMINATES BEFORE REUSING. THIS IS NOT A REQUIREMENT FOR NEW FUEL CELLS.

5. CENTER FUEL CELL IN THE CONTAINER AND SECURE WITH NYLON CORD, REF.-10, TO EYE SCREWS, REF.-9, AS SHOWN. THE FUEL CELL SITS ON THE BOTTOM OF THE CONTAINER WITH THE WEIGHT OF THE TANK HELD IN PLACE WITH NYLON CORDS, REF.-10.

6. COVER ALL ACCESS HOLES ON FUEL CELL WITH REF.-11 AND SECURE WITH REF.-12.

SPECIAL PACKAGING INSTRUCTION	CODE ID 98747	SPI NO. (TPO) F01-153-2153
ITEM NOMENCLATURE CELL, FUEL, AIRCRAFT		SHEET 4 OF 5

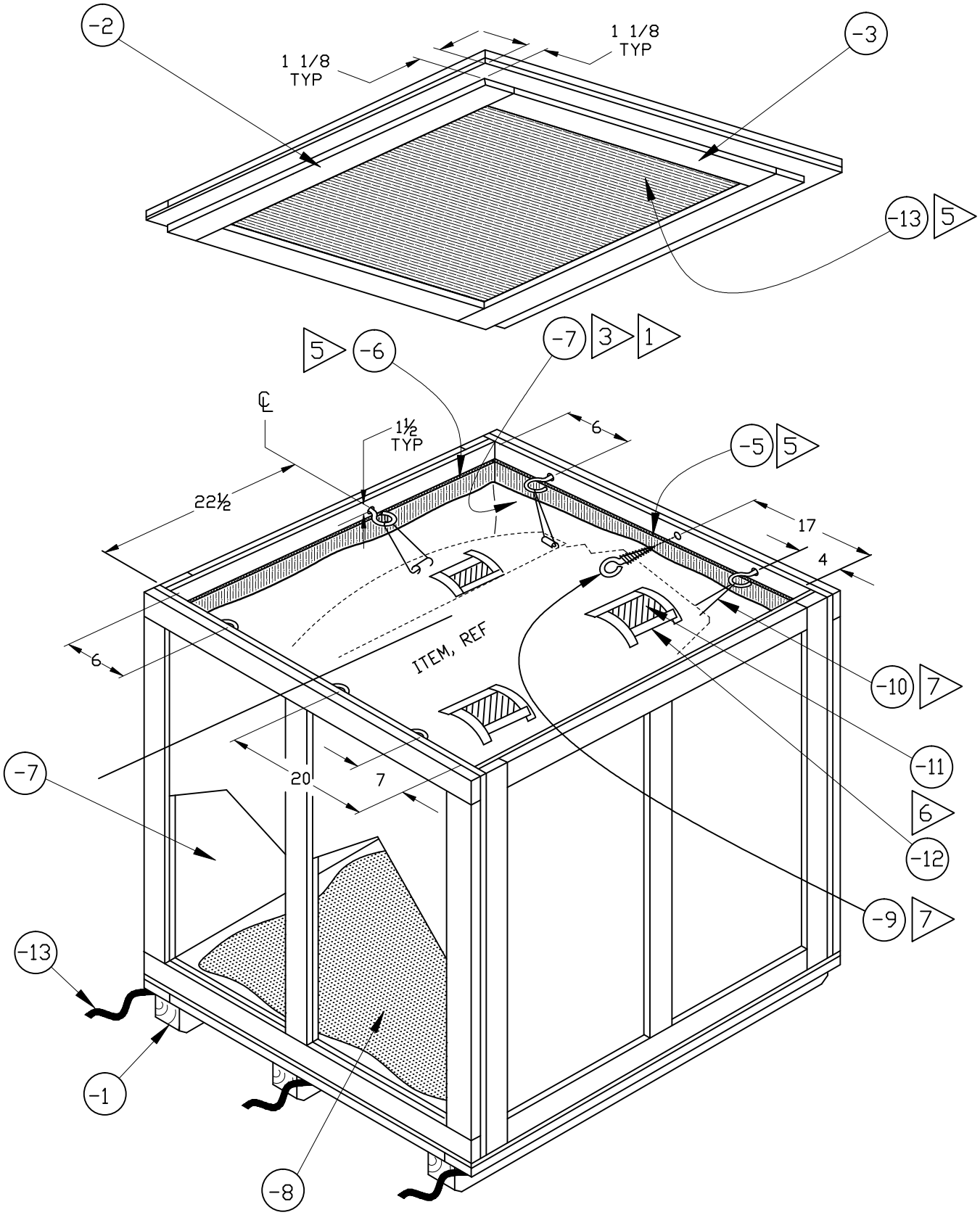

SPECIAL PACKAGING INSTRUCTION	CODE ID 98747	SPI NO. (TPO) F01-153-2153
ITEM NOMENCLATURE CELL, FUEL, AIRCRAFT		SHEET 5 OF 5

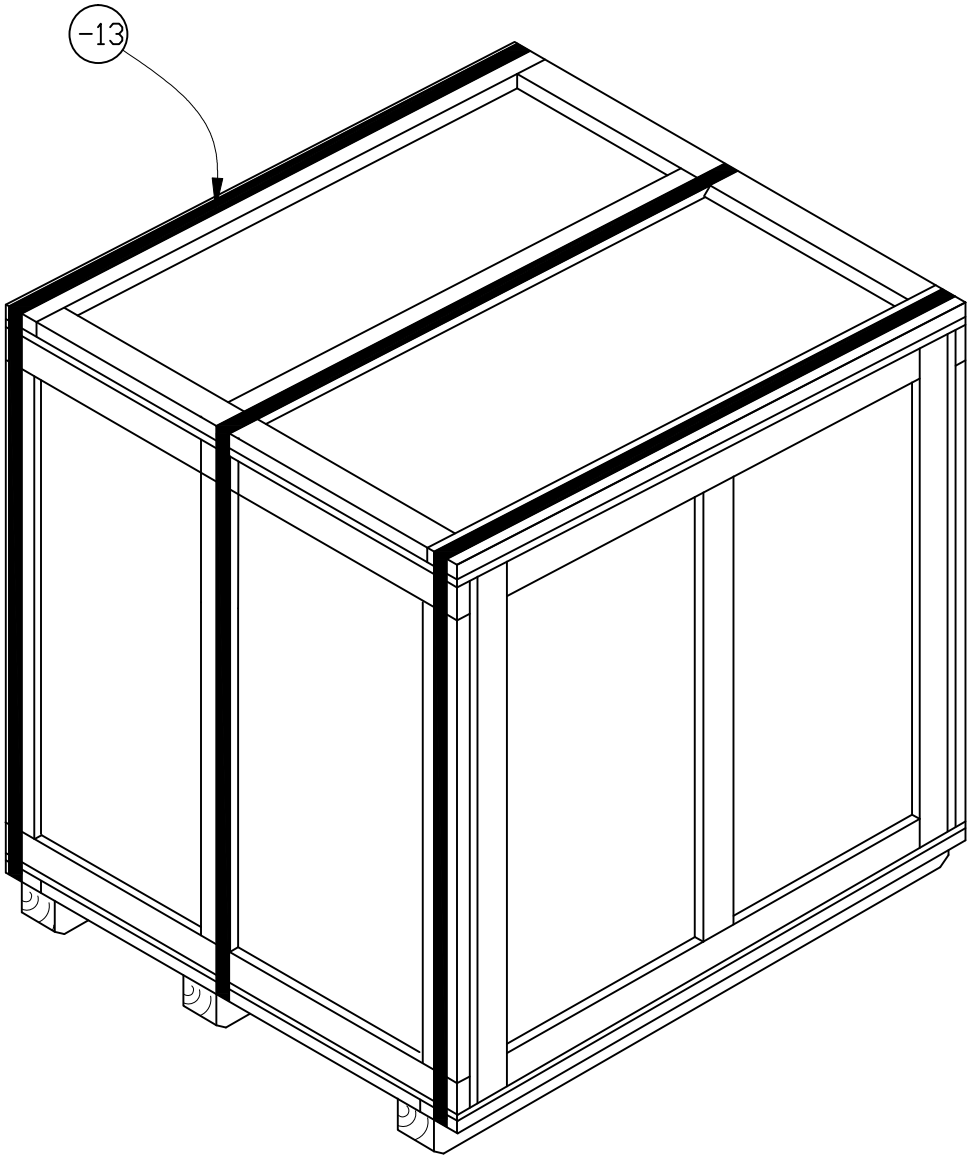

CONTRACT DATA REQUIREMENTS LIST
(1 Data Item)

Form Approved
OMB No. 0704-0188

The public reporting burden for this collection of information is estimated to average 110 hours per response, including the time for reviewing instructions, searching existing data sources, gathering and maintaining the data needed, and completing and reviewing the collection of information. Send comments regarding this burden estimate or any other aspect of this collection of information, including suggestions for reducing the burden, to Department of Defense, Washington Headquarters Services, Directorate for Information Operations and Reports (0701-0188), 1215 Jefferson Davis Highway, Suite 1204, Arlington, VA 22202-4302. Respondents should be aware that notwithstanding any other provision of law, no person shall be subject to any penalty for failing to comply with a collection of information if it does not display a currently valid OMB control number. Please DO NOT RETURN your form to the above address. Send completed form to the Government Issuing Contracting Officer for the Contract/PR No. listed in Block E.

A. CONTRACT LINE ITEM NO.	B. EXHIBIT	C. CATEGORY: TDP ____ TM ____ OTHER NDTI
	A	

D. SYSTEM/ITEM: (Turkiye)	E. CONTRACT/PR NO.	F. CONTRACTOR
Cell, Fuel, Aircraft	FD2020-26-00673	

1. DATA ITEM NO.	2. TITLE OF DATA ITEM	3. SUBTITLE	17. PRICE GROUP
A001	Test/Inspection Report	First Article Test Report	NSP

4. AUTHORITY *(Data Acquisition Document No.)*	5. CONTRACT REFERENCE	6. REQUIRING OFFICE	18. ESTIMATED TOTAL PRICE
DI-NDTI-80809B/T	CLIN for Data	416 SCMS/GUEAA	0.00

7. DD 250 REQ	9. DIST STATEMENT REQUIRED	10. FREQUENCY	12. DATE OF FIRST SUBMISSION
SD	B	OTIME	SEE BLK 16

8. APP CODE	11. AS OF DATE	13. DATE OF SUBSEQUENT SUBMISSION
A	SEE BLK 16	SEE BLK 16

16. REMARKS

NOTE: Changes to office symbols and/or e-mail addresses, when necessary shall be made by letter through the CO/ACO without further revision to this CDRL.

NSN: 1560-01-224-0803WF

1. Block 4: Contractor's format is acceptable. Paragraph 10.2 of DI-NDTI-80809B is clarified as follows:

a. All dimensions and tolerances specified on the manufacturing data shall be listed in one column, with the actual corresponding reading obtained from the inspection of the part listed in another column.

b. Materials utilized in the manufacture of "First Article" item shall be identified and certified along with a copy of material purchase requests as conforming to applicable data requirements.

c. Material processing, including finish requirements (plating, heat treatment, welding, inspecting, anodize, painting, etc.) utilized in the manufacture of "First Article" item shall be identified and certified as conforming to applicable requirements. A copy of the purchase order certifying the process accomplished at other than contractor facility shall be included.

d. Other requirements as called out on Engineering Data Requirement (HILL AFB Form 462).

2. Block 9: Distribution Statement and Export Control Warning shall be IAW DoD Instruction 5230.24.

The following Distribution Statement shall be placed on the first sheet of each document and/or Associated Lists.

DISTRIBUTION STATEMENT "B" Distribution authorized to U.S. Government agencies. (Test & Evaluation) (Apr 2026). Other requests for this document shall be referred to (416 SCMS/GUEAA, Hill AFB, UT 84056-5825).

14. DISTRIBUTION

a. ADDRESSEE	b. COPIES Draft	Final Reg	Final Repro
416 SCMS/	1	1	
GUEAA			
6070 Gum LN			
Bldg. 1213			
Hill AFB, UT			
84056-5825			
SEE BLK 16		1	
15. TOTAL →	1	2	0

G. PREPARED BY: (Data Manager)	H. DATE	I. APPROVED BY: (Engineer)	J. DATE
	22 Apr 2026		27 Apr 2026

CONTRACT DATA REQUIREMENTS LIST

(1 Data Item)

A. CONTRACT LINE ITEM NO.	B. EXHIBIT	C. CATEGORY: TDP ____ TM ____ OTHER NDTI
	A	

D. SYSTEM/ITEM	E. CONTRACT/PR NO.	F. CONTRACTOR
Cell, Fuel, Aircraft	FD2020-26-00673	

16. REMARKS *(Continued)*

EXPORT CONTROL WARNING: All printed and electronic, including digital, technical documents that are determined to contain export-controlled technical data shall be marked with the following statement:

WARNING - This document contains technical data whose export is restricted by the Arms Export Control Act (Section 2751 of Title 22, United States Code) or the Export Control Reform Act of 2018 (Chapter 58 Sections 4801-4852 of Title 50, United States Code). Violations of these export laws are subject to severe criminal penalties. Disseminate in accordance with provisions of DoD Directive 5230.25 and DoD Instruction 2040.02.

3. Blocks 10, 11, 12, 13, 14:

a. For Government Testing - Report to assist in "First Article" testing by the Air Force shall be submitted concurrently with the "First Article" item either in the packaging of the shipping container or separately if the report will not fit within the container packaging unfolded. When shipped in the "First Article" container, the report shall be enclosed in a paper or plastic envelope.

b. SHIP TO: Non-Accountable Bay Transportation Officer
Building 849 West
Hill AFB, UT 84056-5999
MARK FOR: 809 MXSS/MXDEB
7278 4th Street (Bldg. 100, Bay D)
Hill AFB, UT 84056-5205

NOTE: If report is shipped separate from "First Article" item, send report to "MARK FOR" address listed above.

c. Contractor shall deliver the Test/Inspection Report via e-mail to the following e-mail address: gary.carter.19@us.af.mil

INSTRUCTIONS FOR COMPLETING DD FORM 1423

(See DoD 5010.12-M for detailed instructions.)

FOR GOVERNMENT PERSONNEL

Item A. Self-explanatory.

Item B. Self-explanatory.

Item C. Mark (X) appropriate category: TDP - Technical Data Package; TM - Technical Manual; Other - other category of data, such as "Provisioning,""Configuration Management," etc.

Item D. Enter name of system/item being acquired that data will support.

Item E. Self-explanatory (to be filled in after contract award).

Item F. Self-explanatory (to be filled in after contract award).

Item G. Signature of preparer of CDRL.

Item H. Date CDRL was prepared.

Item I. Signature of CDRL approval authority.

Item J. Date CDRL was approved.

Item 1. See DoD FAR Supplement Subpart 4.71 for proper numbering.

Item 2. Enter title as it appears on data acquisition document cited in Item 4.

Item 3. Enter subtitle of data item for further definition of data item (optional entry).

Item 4. Enter Data Item Description (DID) number, military specification number, or military standard number listed in DoD 5010.12-L (AMSDL), or one-time DID number, that defines data content and format requirements.

Item 5. Enter reference to tasking in contract that generates requirement for the data item (e.g., Statement of Work paragraph number).

Item 6. Enter technical office responsible for ensuring adequacy of the data item.

Item 7. Specify requirement for inspection/acceptance of the data item by the Government.

Item 8. Specify requirement for approval of a draft before preparation of the final data item.

Item 9. For technical data, specify requirement for contractor to mark the appropriate distribution statement on the data (ref. DoDD 5230.24).

Item 10. Specify number of times data items are to be delivered.

Item 11. Specify as-of date of data item, when applicable.

Item 12. Specify when first submittal is required.

Item 13. Specify when subsequent submittals are required, when applicable.

Item 14. Enter addressees and number of draft/final copies to be delivered to each addressee. Explain reproducible copies in Item 16.

Item 15. Enter total number of draft/final copies to be delivered.

Item 16. Use for additional/clarifying information for Items 1 through 15. Examples are: Tailoring of documents cited in Item 4; Clarification of submittal dates in Items 12 and 13; Explanation of reproducible copies in Item 14.; Desired medium for delivery of the data item.

FOR THE CONTRACTOR

Item 17. Specify appropriate price group from one of the following groups of effort in developing estimated prices for each data item listed on the DD Form 1423.

a. Group I. Definition - Data which is not otherwise essential to the contractor's performance of the primary contracted effort (production, development, testing, and administration) but which is required by DD Form 1423.

Estimated Price - Costs to be included under Group I are those applicable to preparing and assembling the data item in conformance with Government requirements, and the administration and other expenses related to reproducing and delivering such data items to the Government.

b. Group II. Definition - Data which is essential to the performance of the primary contracted effort but the contractor is required to perform additional work to conform to Government requirements with regard to depth of content, format, frequency of submittal, preparation, control, or quality of the data item.

Estimated Price - Costs to be included under Group II are those incurred over and above the cost of the essential data item without conforming to Government requirements, and the administrative and other expenses related to reproducing and delivering such data item to the Government.

c. Group III. Definition - Data which the contractor must develop for his internal use in performance of the primary contracted effort and does not require any substantial change to conform to Government requirements with regard to depth of content, format, frequency of submittal, preparation, control, and quality of the data item.

Estimated Price - Costs to be included under Group III are the administrative and other expenses related to reproducing and delivering such data item to the Government.

d. Group IV. Definition - Data which is developed by the contractor as part of his normal operating procedures and his effort in supplying these data to the Government is minimal.

Estimated Price - Group IV items should normally be shown on the DD Form 1423 at no cost.

Item 18. For each data item, enter an amount equal to that portion of the total price which is estimated to be attributable to the production or development for the Government of that item of data. These estimated data prices shall be developed only from those costs which will be incurred as a direct result of the requirement to supply the data, over and above those costs which would otherwise be incurred in performance of the contract if no data were required. The estimated data prices shall not include any amount for rights in data. The Government's right to use the data shall be governed by the pertinent provisions of the contract.

MANUFACTURING QUALIFICATION REQUIREMENTS

NSN: 1560010542800, 1560013229987, 1560010541246, 1560012240803
P/N: (Lockheed Martin: 16VB004001, 16VB004002) 37516-3, 320-4-45550-105, 37517-7,320-4-45551-105
Noun: Fuel Cell
Application: F-16 Aircraft

SECTION C:

1. QUALIFICATION REQUIREMENTS THAT MUST BE SATISFIED TO BECOME A QUALIFIED SOURCE

a. *Prequalification Notice/Sources Sought:* The offeror shall notify the appropriate government Small Business Office or, if responding to a solicitation, the contracting officer in the appropriate government contracting office, of intent to qualify as a source for this Fuel Cell.

b. *Facilities, Testing, and Inspection Capabilities:* The offeror must certify to the government that they have, or have access to, the required facilities and equipment to manufacture, inspect, test, package, and store the item. The offeror shall make their facilities, equipment, tooling, and personnel available for evaluation and inspection by the government. Lockheed Martin wet test fixtures are required for the manufacture of the Fuel Cells; see section g for an estimated cost of these fixtures.

c. *Data Verification:* The offeror must verify that he has a complete data package. This verification must include a complete list of all procedures, drawings, and specifications, including change notices, in the offeror's possession including, at a minimum Lockheed Martin (81755) drawing 16VB004001, 16VB004002, and 16ZB004. The offeror may also be required to produce copies of all applicable procedures, drawings, or specifications.

d. *Manufacture/Process Verification:* The offeror must manufacture this item to conform to the government requirements as prescribed within the ESA-approved engineering/technical data package. The offeror must show compliance with Unique Identification (UID) requirements in accordance with DFARS 211.274 as prescribed within the ESA-approved engineering/technical data package. The offeror must provide, at their own expense, data showing the results of all quality, performance, and environmental evaluations conducted by the offeror to show compliance with the government requirements as prescribed by 416 SCMS/GUEAA. The offeror shall also identify its sources for materials and its standards for internally used processes The offeror must also provide evidence in the form of a management process in which they will manage Critical Safety Items (CSIs) and all of the critical characteristics and critical safety processes.

e. *Test and Evaluation and/or Verification:* The offeror, at their own expense, shall prepare and submit to 416 SCMS/GUEAA for their prior approval, a qualification test plan/procedure detailing how they intend to verify compliance with all performance, environmental, mechanical, and quality assurance requirements identified by Drawing 16VB004001, 16VB004002, and 16ZB004 . After completion of the approved qualification testing, the offeror shall be required to submit a complete test report of the results to 416 SCMS/GUEAA for their review and approval prior to the contract award. The government retains the right to exercise the option to inspect the testing processes, including on-site witnessing of any or all documented testing. To allow accomplishing this, the offeror shall notify the government at least 30 days in advance of the occurrence of any testing that will be used as a basis for

qualification. The offeror's facilities shall be made available for government inspection during these tests.

f. *Qualification Article Verification:* The offeror must provide, at their own expense, a pre-contract award qualification article for evaluation by the government. This article must comply with all of the requirements of Drawing 16VB004001, 16VB004002, and 16ZB004. This article shall be subjected to a form, fit, and function evaluation to demonstrate compatibility with the weapon system and to evaluate the manufacturing capability of the offeror. Offerors will be notified whether or not their qualification article passed or failed the required qualification testing within 180 days of submitting a product for qualification testing. Note that successful completion of the qualification testing does not guarantee any contract award. If the offeror is deemed qualified and awarded the contract, a post-contract award first article exhibit may be required to verify production capability.

g. *Qualification Requirement Cost Estimate:* Estimated likely costs for testing and evaluation, which will be incurred by the potential offering party to become qualified: $50000. 16VB004001, 16VB004002, and 16ZB004 detail the development and testing of materials and systems that will be incurred by the offeror. Additionally, the manufacture of F-16 fuel cells require approved wet test fixtures; fixtures can be purchased from Lockheed Martin at a current estimated cost of 1.2 million dollars, or independently designed, manufactured, and submitted for approval, by USAF Engineering.

h. *Qualification Time Completion Estimate:* It is the estimate of the engineering support activity that completion of this qualification effort should require 730 days. This is based on complexity of the Fuel Cell, the phase gated development/testing, and the 16ZB004 specified duration of materials testing.

i. *Qualification Time Limitation:* An offeror may not be denied the opportunity to submit and have considered an offer for a contract if the offeror can demonstrate to the satisfaction of the contracting officer that the offeror (or its product) meets these standards for qualification or can meet them before the date specified for award of the contract. The award will not be delayed to provide the vendor with an opportunity to demonstrate its ability to meet the standards specified in this qualification requirement.

j. *Evaluation of Proposals Not Previously Qualified:* The offeror must be fully qualified in order to be eligible for a contract award. Therefore, the offeror must fulfill all of the requirements stated, in writing, in the qualification requirement before the date specified for award of the contract. Once all requirements are met, the offeror will be listed as an approved source for this item. Approval, however, does not guarantee subsequent contract award.

MANUFACTURING QUALIFICATION REQUIREMENTS

NSN: 1560010542800, 1560013229987, 1560010541246, 1560012240803
P/N: (Lockheed Martin: 16VB004001, 16VB004002) 37516-3, 320-4-45550-105, 37517-7,320-4-45551-105
Noun: Fuel Cell
Application: F-16 Aircraft

2. SOURCE QUALIFICATION WAIVER REQUIREMENTS

Sources who meet any of the following source Qualification Waiver Criteria (QWC) may apply for a waiver of all or part of the qualification requirements. If a waiver is granted and the offeror is awarded a contract, the offeror may still be required to provide a post-contract award first article exhibit to verify production capability:

a. *QWC1:* The potential source submits written certification that the articles have been supplied to the government or original equipment manufacturer (e.g., DD Form 250, Material Inspection and Receiving Report, Purchase Order invoice, etc).

b. *QWC4:* A source qualified to provide earlier dash numbers of a basic P/N may be qualified to provide other dash numbers of that same basic P/N, provided there is no increase in complexity, criticality, or other relevant requirements.

c. *QWC5:* A source qualified to provide a similar or like item can be qualified to provide the required item. However, for approval, the engineering authority must verify that there is no increase in complexity, criticality, or other requirements over that of the similar item. At a minimum, the source shall provide a complete set of drawings for the similar item and written proof, such as purchase orders, shipping documents, etc., to show that the similar item was provided to the original equipment manufacturer or DoD.

d. *QWC6:* A source previously qualified to provide an item, but which has been purchased, sold, merged, absorbed, reformed, split, etc., may qualify if it can be established that the qualification is currently with the requester and that the requester has the same or equivalent facilities, tooling, equipment, personnel, and utilizes the original forging, castings, etc., in the manufacturing process.

REVISION: 16

ENGINEERING DATA LIST

HISTORY

DATE:	DATA TECH:	ORGANIZATION/OFFICE SYMBOL:	END ITEM:	PAGE:
21 APR 2026	Lawson, Brian D	429 SCMS / GUMACA	F-16	1 OF 1
CAGE:	**MANUFACTURER NAME:**	**REFERENCE NUMBER:**	**NOUN:**	**NSN:**
56221	AXILLON AEROSPACE (ROCKMART), LLC	320-4-45551-105	CELL,FUEL,AIRCRAFT	1560012240803WF

LINE/ SUB	CAGE	ENG DRAWING NUM/ ACCOMP DOC NUM	REV	NR SHEETS	FURN CODE	DIST CODE	NOUN	REMARKS
L	98747	HILL AFB FORM 462			X		ENGINEERING INSTRUCTIONS	
L	81755	16VB004002	Y		S	D	FUEL TANK - FUSELAGE TWO PL AIRCRAFT, FORWARD, REM	NAME: Lawson, Brian D DATE: 21 APR 2026 W/PL ISSUE 037, REV N. W/EO 784M9
L	81755	16ZB004	D		S	D	ADDENDUM SPECIFICATION	
L	81755	16Z001	AK		S	A	INTERPRETATION OF FORMATS	NAME: Lawson, Brian D DATE: 21 APR 2026 W/PL REV FZ, ISSUE 204

STANDARD ENGINEERING TEXT

NAME: Lawson, Brian D DATE: 21 APR 2026

RELEASE OF THIS DATA TO A FOREIGN OWNED, CONTROLLED OR INFLUENCED COMPANY IS DEPENDENT UPON THE APPROVAL OF THE FOREIGN DISCLOSURE OFFICE.

FURNISHED METHOD CODE LEGEND:

C - CLASSIFIED DOCUMENT.	X - DATA SUPPLIED (NOT IN JEDMICS).	G - GOV'T DOCUMENT.
S - FURNISHED WITH SOLICITATION.	R - FURNISHED BY PCO UPON REQUEST.	O - OTHERS, CONTRACTOR MUST ACQUIRE.
M - STABLE BASE DRAWING REQUIRED; FURNISHED WITH CONTRACT AWARD.	P - PARTIAL DOCUMENT FURNISHED.	A- DATA NOT AVAILABLE.
	V - VENDOR DRAWING; (NOT PROVIDED).	