NOTES:
1. BLACK POWDER COATED STEEL SKID ASSEMBLY
2. NUMBER OF FILTER BRACKET SUPPORTS MAY VARY
3. FILTER SERVICE AREA: 48.5" X 12.75"
4. PISTON SERVICE AREA: 24" X 12.75"
5. MINI-FILTERS, HYDRAULIC AND ELECTRICAL CONNECTIONS NOT SHOWN

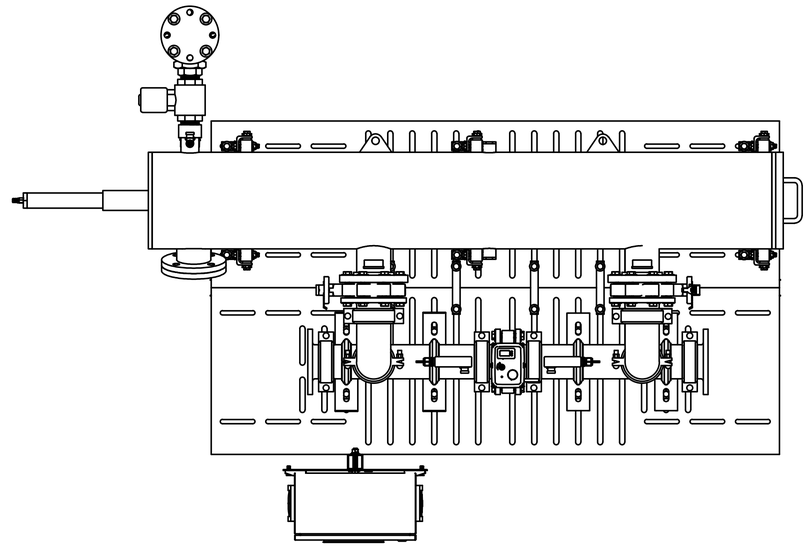

TOP VIEW

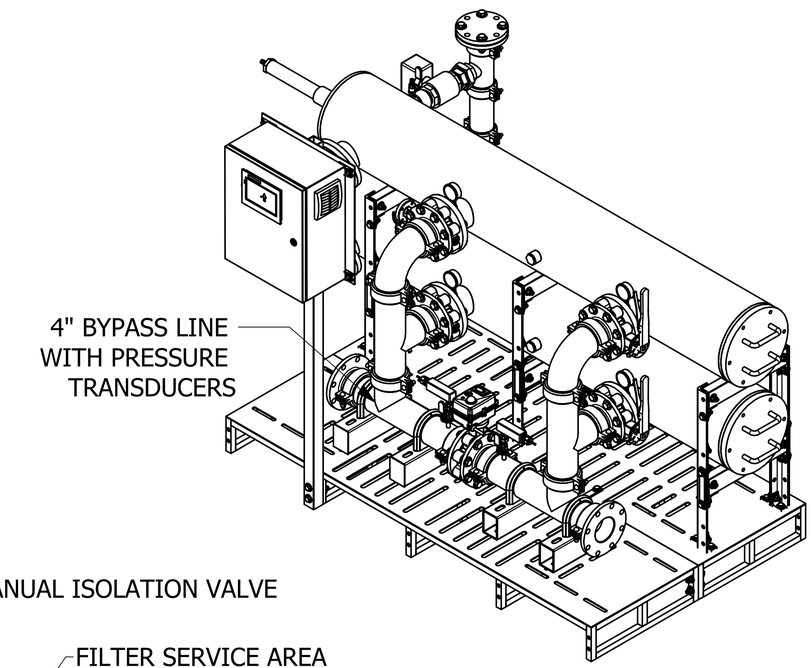

ISO VIEW

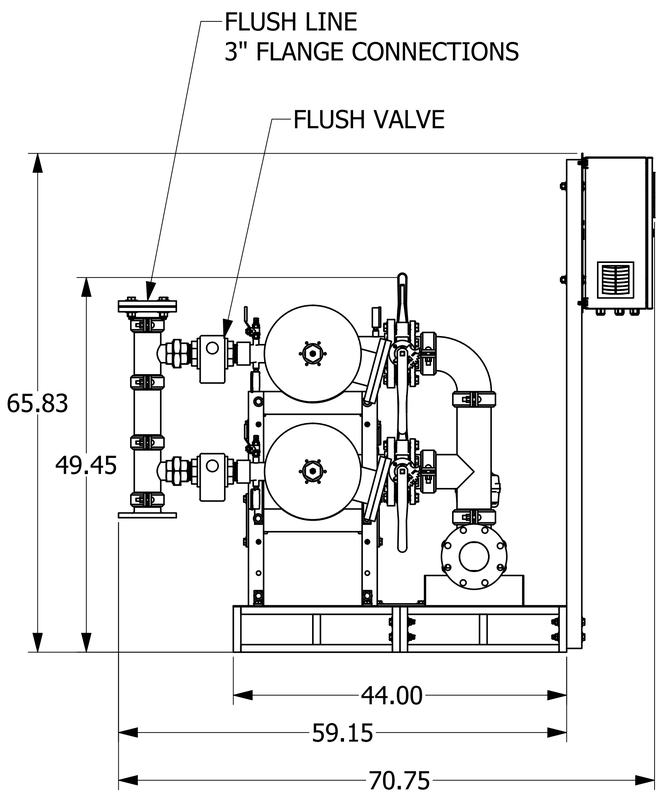

LEFT END VIEW

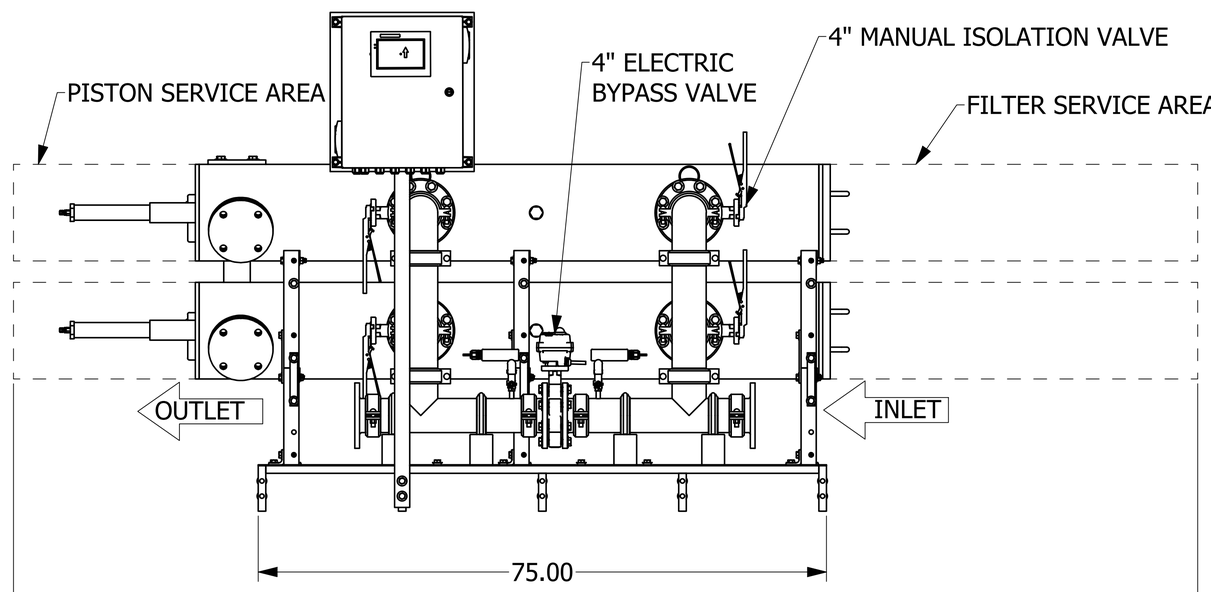

ELEVATION VIEW

SEDIMENT FILTER - 4XLP-2		LiquiTech 421 Eisenhower Lane S, Lombard, IL 60148	
CONFIGURATION: SKID MOUNT		DRAWN: ncameron	10/26/2022
PART NUMBER: 2-9-0003		APPROVED BY	
DWG NO		REV	SIZE: D
SHEET 1 OF 3	SCALE 1 /10		