SPECIAL PACKAGING INSTRUCTION

CODE ID	SPI NO. (TPO)
98747	F01-547-5222
	SHEET 1 OF 4

PART OR DRAWING NO.	NATIONAL STOCK NO.	CURRENT REV
EAS80200-101	4130-01-547-5222 AH	

ITEM NOMENCLATURE	ORIGINAL DATE
CHILLER, WATER, REFRIGERATING	12271

ILL. D. NAY
P.S. N. CORONADO
CHK. M. MERRILL
AUTH. L. SAVIKIS

MILITARY PRESERVATION IAW MIL-STD-2073

SERVICEABLE METHOD: 10
UNSERVICEABLE METHOD: 10
QUP 001
ICQ 000
CLEANING & DRYING: IAW MIL-STD-2073
PRESERVATIVE: N/A

MARKING IAW MIL-STD-129

SPECIAL MARKINGS:

A) SPI NO. F01-547-5222
MARK THE SPI NUMBER ON THE IDENTIFICATION SIDE OF CONTAINER.

B) REUSABLE CONTAINER & DUNNAGE DO NOT DESTROY.

C) DO NOT STACK

D) CAUTION: LIFT BY BASE ONLY

E) TO OPEN-REMOVE LAG BOLTS FROM TOP, SIDES, AND BOTTOM

CLOSURE

LEVEL A: IAW: ASTM D6256 AND THIS INSTRUCTION
LEVEL B: IAW: ASTM D6256 AND THIS INSTRUCTION

PACKING AS SPECIFIED BELOW AND BILL OF MATERIALS

LEVEL	SPEC	STYLE	TYPE	CL	VRTY	GR	TR
A	ASTM D6256 (MOD)	A	II	2			B
B	ASTM D6256 (MOD)	A	II	2			A

	LEVEL A	LEVEL B
GROSS CU FT	94.010	94.010
GROSS WT LBS	1485	1485
DESIGN FRAGILITY G	110	110

	LENGTH	WIDTH	DEPTH
CNTR I.D.			
LEVEL A:	55	55	44
LEVEL B:	55	55	44
CNTR O.D.			
LEVEL A:	57	57	50
LEVEL B:	57	57	50
ITEM DIM	47	47	41 3/4
ITEM WT.	1235 LBS		

REVISIONS		
LTR	DESCRIPTION	DATE

P/N	QTY REQD	NOMENCLATURE OR DESCRIPTION	SIZE: (INCHES UNLESS SPECIFIED) TOLERANCES ON FRAC. ± 1/8, DECIMAL ± .10, ANGLES ± 1°	MATERIAL SPECIFICATION	
-16	50	WASHERS, PLAIN	1/4	ASME B18.21.1	
-15	50	LAG BOLTS	2 1/2 X 1/4	ASME B18.2.1	
-14	1	SHROUD	AS REQUIRED	A-A-3174 TYPE I, CLASS 1, GRADE A, FIN 1	1
-13	2	PADS, TOP & BOTTOM	48 X 48 X 1/4	ASTM D4727 CF, DOM, DW, GRADE 200	1
-12	16	NUTS, HEX	3/8	FF-N-836 TYPE II, STYLE 4, PLAIN	A
-11	16	WASHERS, PLAIN	3/8	ASME B18.21.1	A
-10	16	BOLTS, CARRIAGE	9 X 3/8	ASME B18.5	A
-9	2	END SILLS	4 X 4 (NOM) X 48	ASTM D6199 CLASS 2	A
-8	2	SIDE SILLS	4 X 4 (NOM) X 55	ASTM D6199 CLASS 2	A
-7	1	FLOOR BOARD	2 X 10 (NOM) X 55	ASTM D6199 CLASS 2	A
-6	4	FLOOR BOARDS	2 X 12 (NOM) X 55	ASTM D6199 CLASS 2	A
-5	3	SKIDS	4 X 4 (NOM) X 57	ASTM D6199 CLASS 2	A
-4	2	TOP LAG FILL STRIPS	2 X 2 (NOM) X 51 7/8	ASTM D6199 CLASS 2	C
-3	2	TOP LAG STRIPS	2 X 2 (NOM) X 53	ASTM D6199 CLASS 2	C
-2	2	END STRIPS	2 X 2 (NOM) X 35	ASTM D6199 CLASS 2	B
-1	1	EXTERIOR CONTAINER	55 X 55 X 47 1/2 (ID)	ASTM D6256 STYLE A, TYPE II, CLASS 2, TR A	

SPI NO. F01-547-5222

CAUTION NOTICES

NOTICE 1: OTHER NSNs MAY BE ASSIGNED TO THIS SPI BUT MAY NOT BE SHOWN ON THE SPI.

NOTICE 2: PACKAGING MATERIAL MAY BE SUBSTITUTED IF IT MEETS THE REQUIREMENTS OF MIL-STD-2073, PROVIDES EQUAL OR BETTER PROTECTION AND THERE IS NO INCREASED COST TO THE GOVERNMENT.

NOTICE 3: OVERSEAS AND FMS PACKAGING MUST MEET THE REQUIREMENTS OF LEVEL A PACKAGING.

INTERNATIONAL STANDARDS FOR PHYTOSANITARY MEASURES
REVISION OF ISPM NO. 15
REVISION OF WOOD PACKAGING MATERIAL FOR INTERNATIONAL TRADE

THE FOLLOWING STATEMENT IS IN COMPLIANCE WITH THE UNITED NATIONS-IMPLEMENTED RESTRICTIONS ON WOOD PACKAGING MATERIAL (WPM). THIS REQUIREMENT IS SPECIFICALLY CONCERNED WITH INVASIVE SPECIES SUCH AS THE PINEWOOD NEMATODE. WPM IS DEFINED AS WOOD PALLETS, SKIDS, LOAD BOARDS, PALLET COLLARS, WOODEN BOXES, REELS, DUNNAGE, CRATES, FRAMES, AND CLEATS. THE STATEMENT BELOW CITES THE REQUIREMENTS IN DETAIL AND COVERS LUMBER FOR BUILDING CONTAINERS AND PALLETS USED FOR DELIVERIES, RESULTING IN SHIPMENTS WORLDWIDE (DIRECT, OR THROUGH AIR LOGISTICS CENTERS (ALC), CONTAINER CONSOLIDATION POINTS (CCP), OR OTHER BASES).

WOODEN LUMBER, WOODEN PALLET AND PACKAGING/CONTAINER STATEMENT:

ALL WOODEN LUMBER, WOODEN PALLETS, AND WOODEN CONTAINERS PRODUCED ENTIRELY OR IN PART OF WOOD PACKAGING MATERIAL (WPM) SHALL BE CONSTRUCTED FROM DEBARKED WOOD IN ADDITION TO THE APPLICATION OF HEAT-TREATED (HT) MATERIAL (HT TO 56 DEGREES CENTIGRADE OR 133 DEGREES FAHRENHEIT FOR 30 MINUTES). CERTIFICATION/MARKING IS REQUIRED BY AN ACCREDITED AGENCY RECOGNIZED BY THE AMERICAN LUMBER STANDARDS COMMITTEE (ALSC). FOR REFERENCE DOCUMENTATION, SEE LATEST REVISION OF "INTERNATIONAL STANDARDS FOR PHYTOSANITARY MEASURES (ISPM NO. 15), "REGULATION OF WOOD PACKAGING MATERIAL IN INTERNATIONAL TRADE."

NOTES

1. PLACE ONE PAD, REF.-13, ON BASE PRIOR TO SETTING ITEM IN PLACE. PLACE THE OTHER PAD ON TOP OF ITEM PRIOR TO COVERING WITH SHROUD, REF.-4.

SPECIAL PACKAGING INSTRUCTION	CODE ID 98747	SPI NO. (TPO) F01-547-5222
ITEM NOMENCLATURE CHILLER, WATER, REFRIGERATING		SHEET 3 OF 4

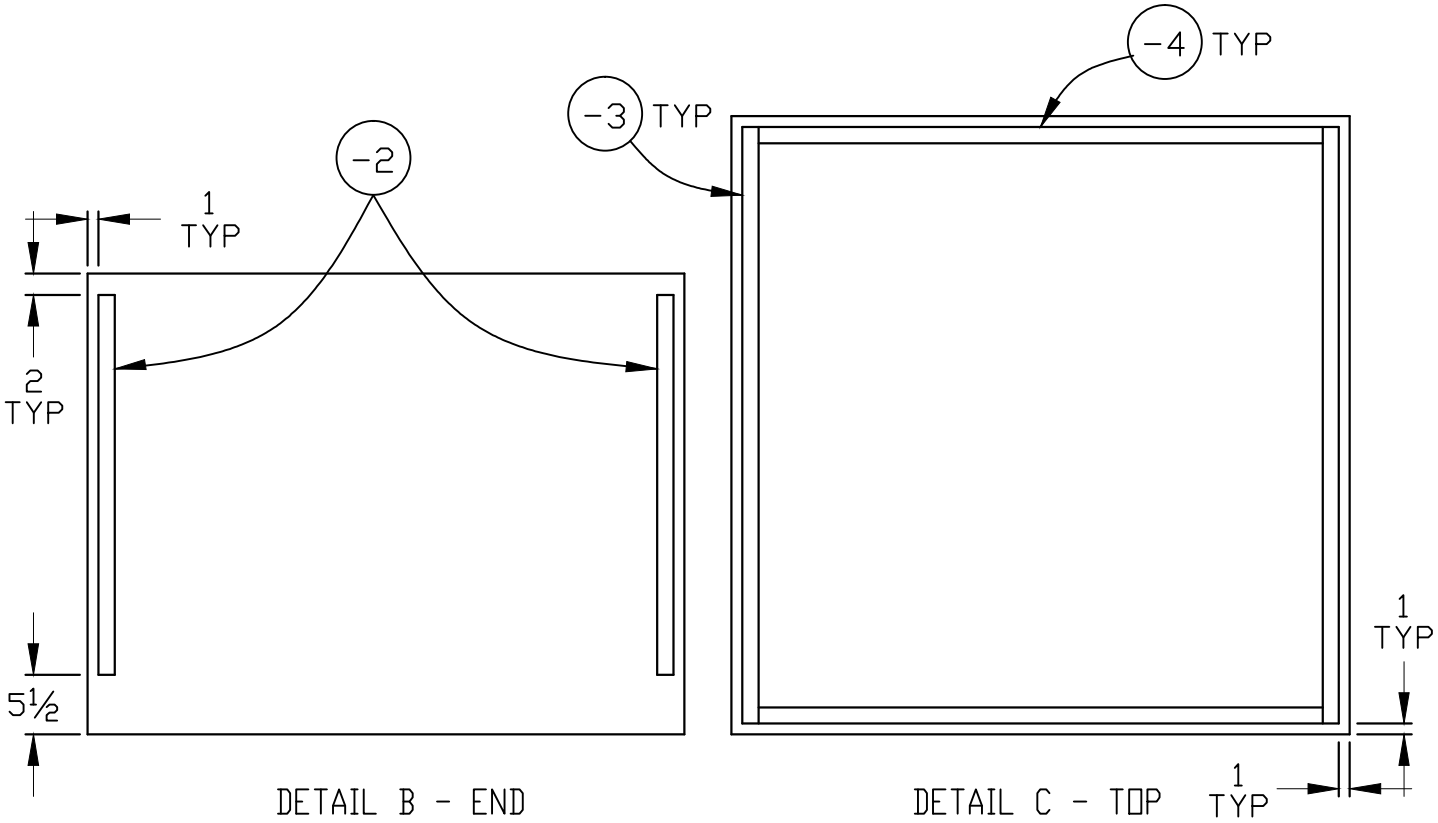

DETAIL B - END

DETAIL C - TOP

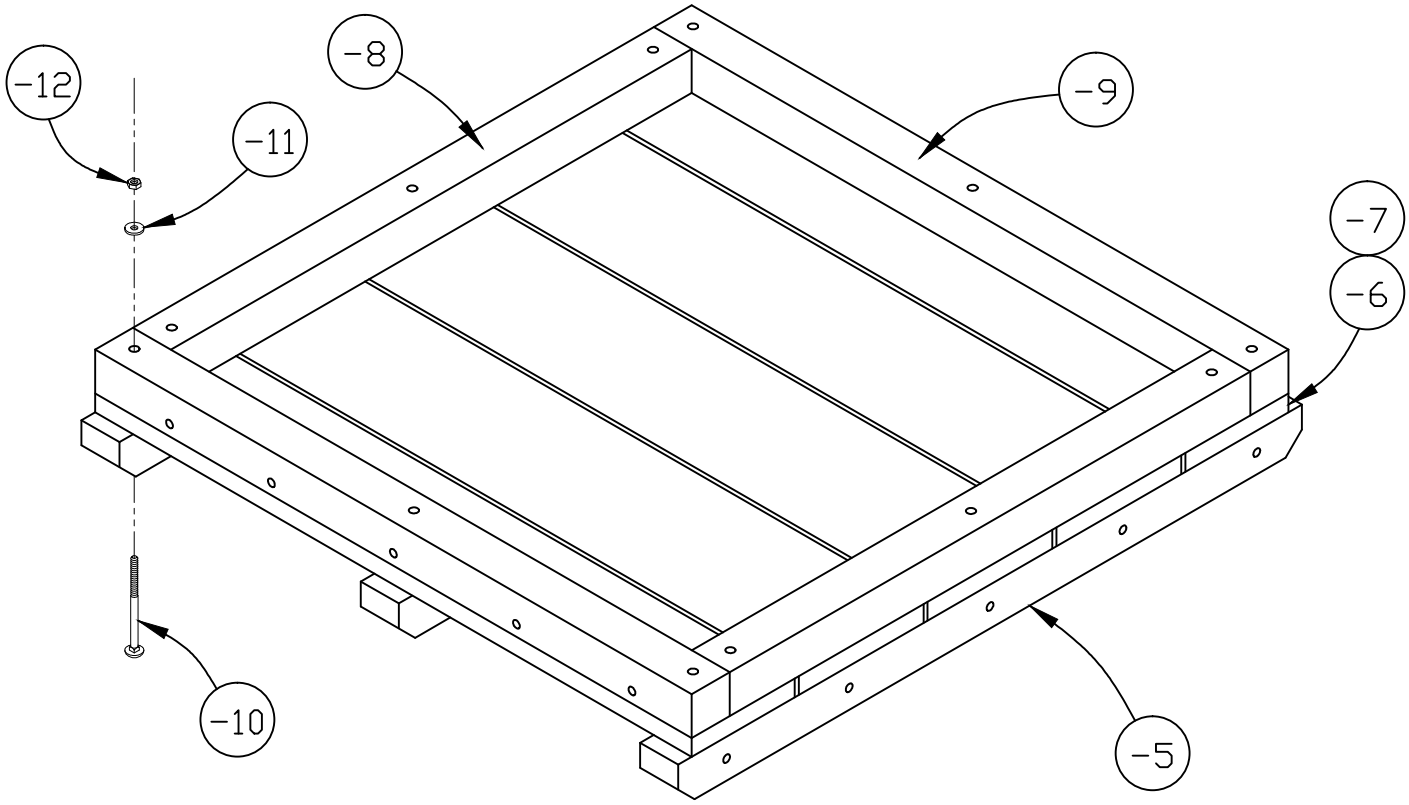

DETAIL A - BASE
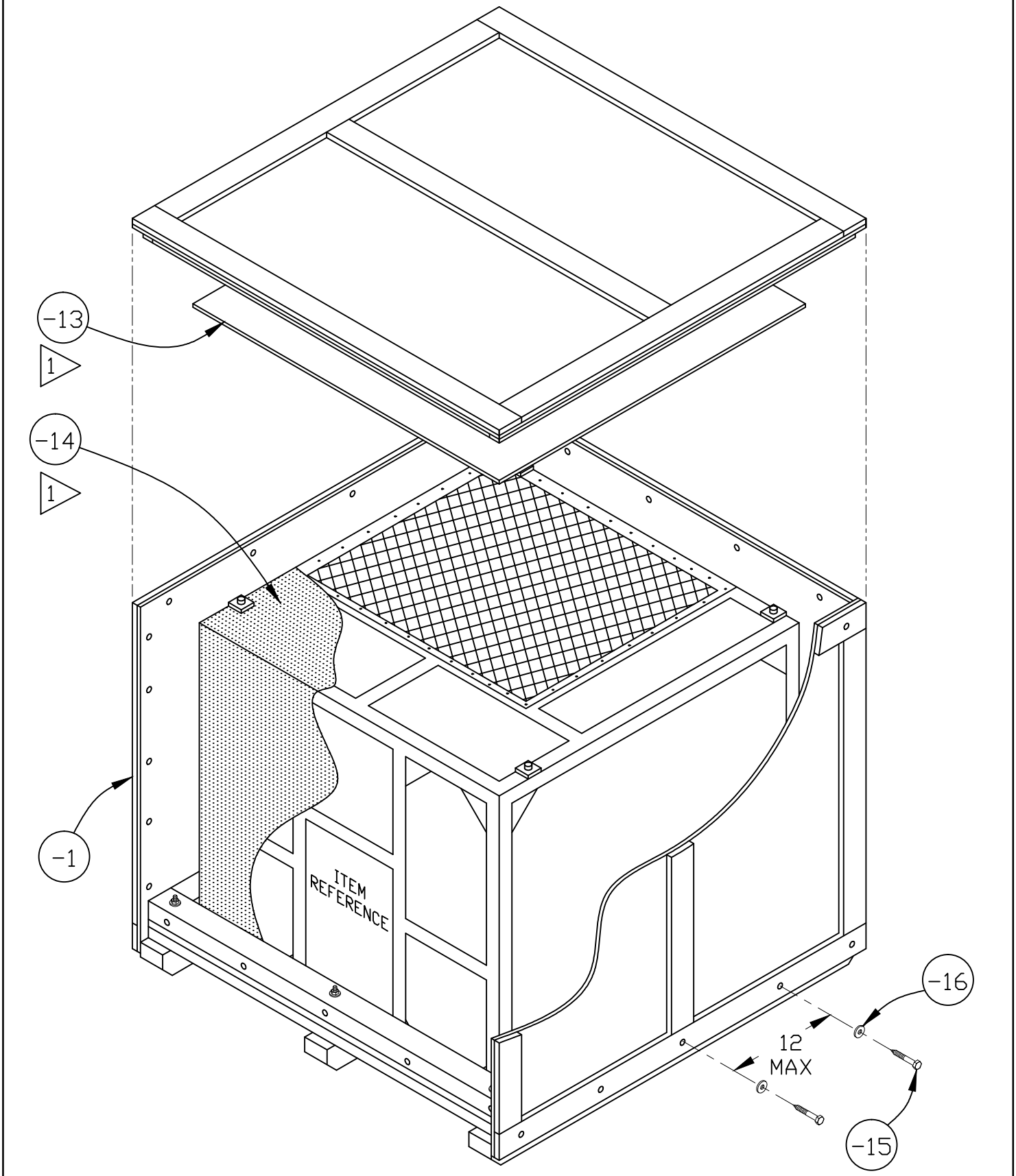
SPECIAL PACKAGING INSTRUCTION	CODE ID 98747	SPI NO. (TPO) F01-547-5222
ITEM NOMENCLATURE CHILLER, WATER, REFRIGERATING		SHEET 4 OF 4