HT24F1M(XX)

INSTALLATION

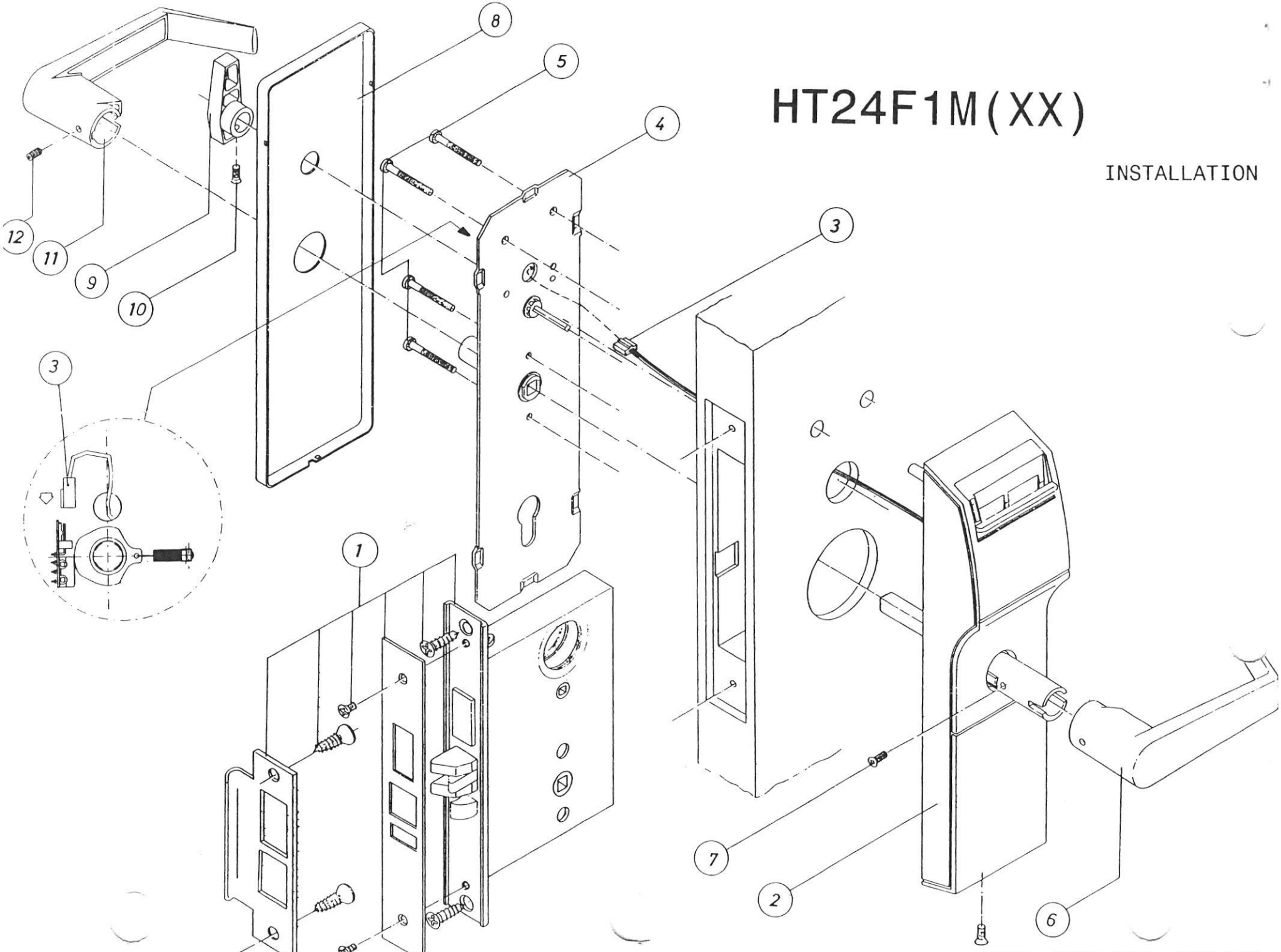

PART No. HT2IP21136GRA3 (TESA 1-95)

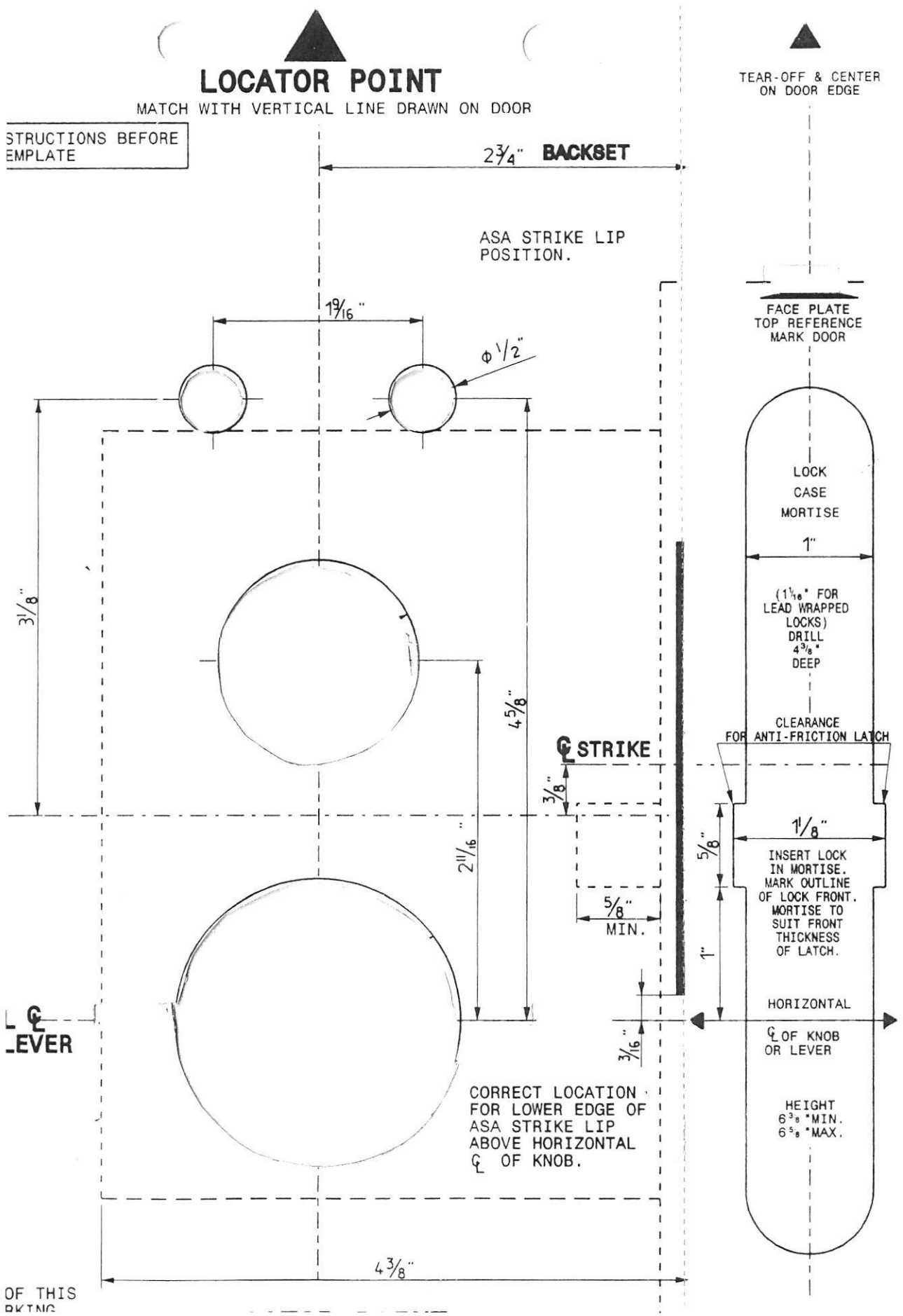
LOCATOR POINT
MATCH WITH VERTICAL LINE DRAWN ON DOOR
STRUCTIONS BEFORE
EMPLATE
2¾" BACKSET
ASA STRIKE LIP
POSITION.
1 9/16"
Φ 1/2"
3 1/8"
4 5/8"
2 11/16"
℄ STRIKE
3/8"
5/8"
MIN.
3/16"
℄
LEVER
CORRECT LOCATION
FOR LOWER EDGE OF
ASA STRIKE LIP
ABOVE HORIZONTAL
℄ OF KNOB.
4 3/8"
OF THIS
TEAR-OFF & CENTER
ON DOOR EDGE
FACE PLATE
TOP REFERENCE
MARK DOOR
LOCK
CASE
MORTISE
1"
(1 1/16" FOR
LEAD WRAPPED
LOCKS)
DRILL
4 3/8"
DEEP
CLEARANCE
FOR ANTI-FRICTION LATCH
1 1/8"
5/8"
INSERT LOCK
IN MORTISE.
MARK OUTLINE
OF LOCK FRONT.
MORTISE TO
SUIT FRONT
THICKNESS
OF LATCH.
1"
HORIZONTAL
℄ OF KNOB
OR LEVER
HEIGHT
6 3/8" MIN.
6 5/8" MAX.

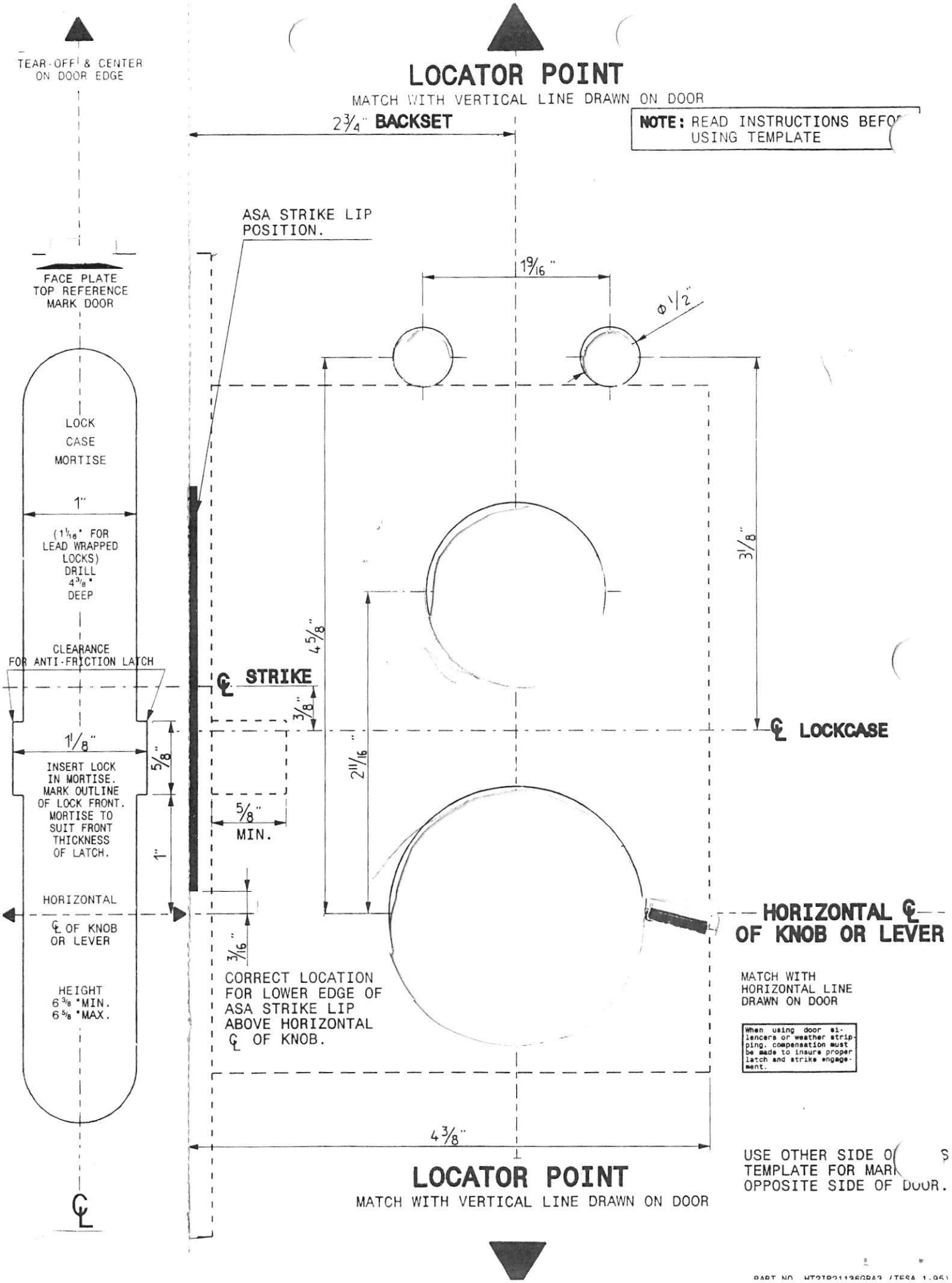

PART NO. HT2IP21136GPA2 (TESA 1-95)

HT-22/24+3500+11"F

TESA

-CERRADURA ELECTRONICA CON PICAPORTE TUBULAR
-ELECTRONIC LOCK WITH TUBULAR LATCH
-SERRURE ELECTRONIQUE AVEC SERRURE TUBULAIRE

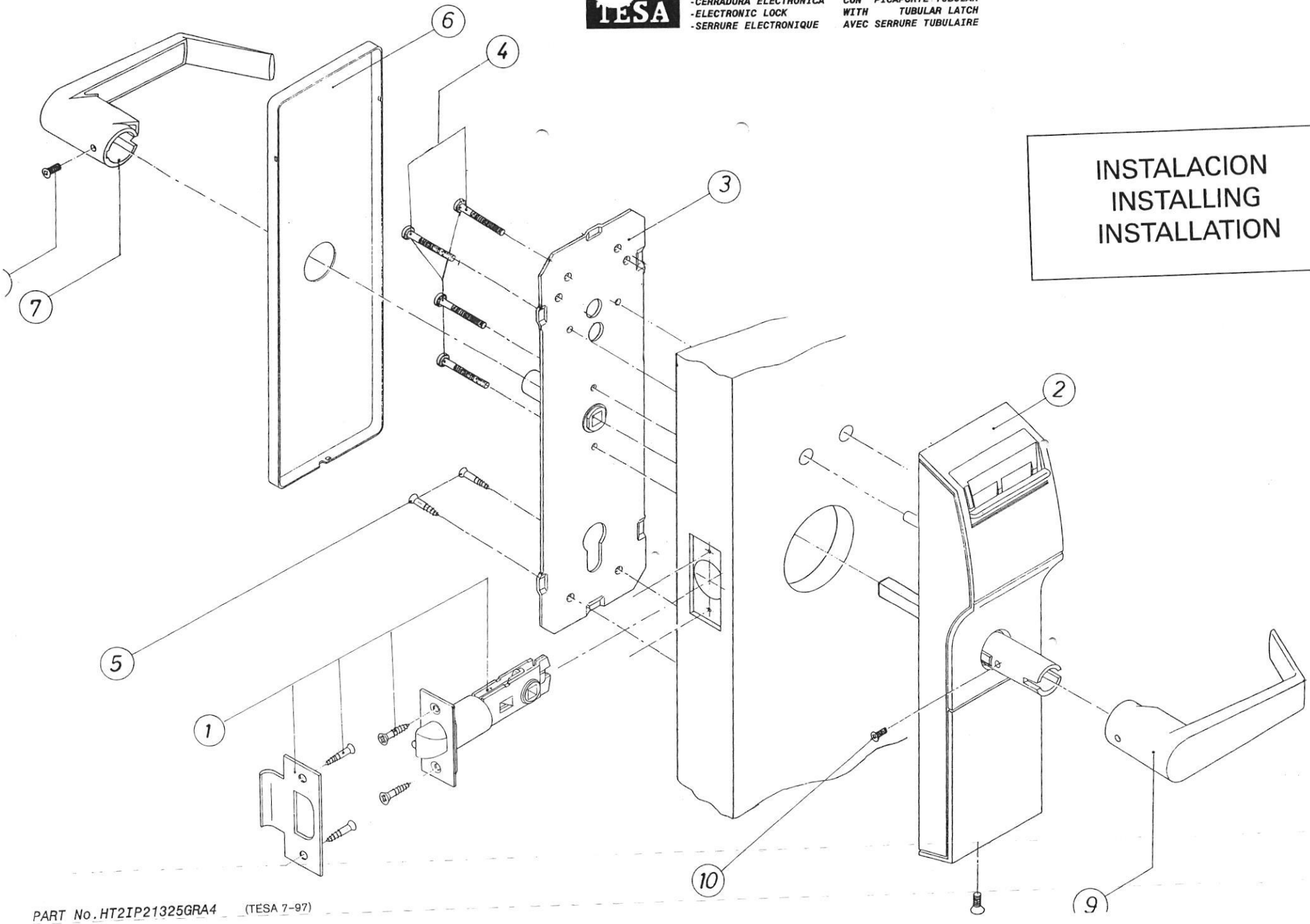

INSTALACION
INSTALLING
INSTALLATION

PART No.HT2IP21325GRA4 (TESA 7-97)

HT-22/24+35UC+TT P

TESA

-CERRADURA ELECTRONICA CON PICAPORTE TUBULAR
-ELECTRONIC LOCK WITH TUBULAR LATCH
-SERRURE ELECTRONIQUE AVEC SERRURE TUBULAIRE

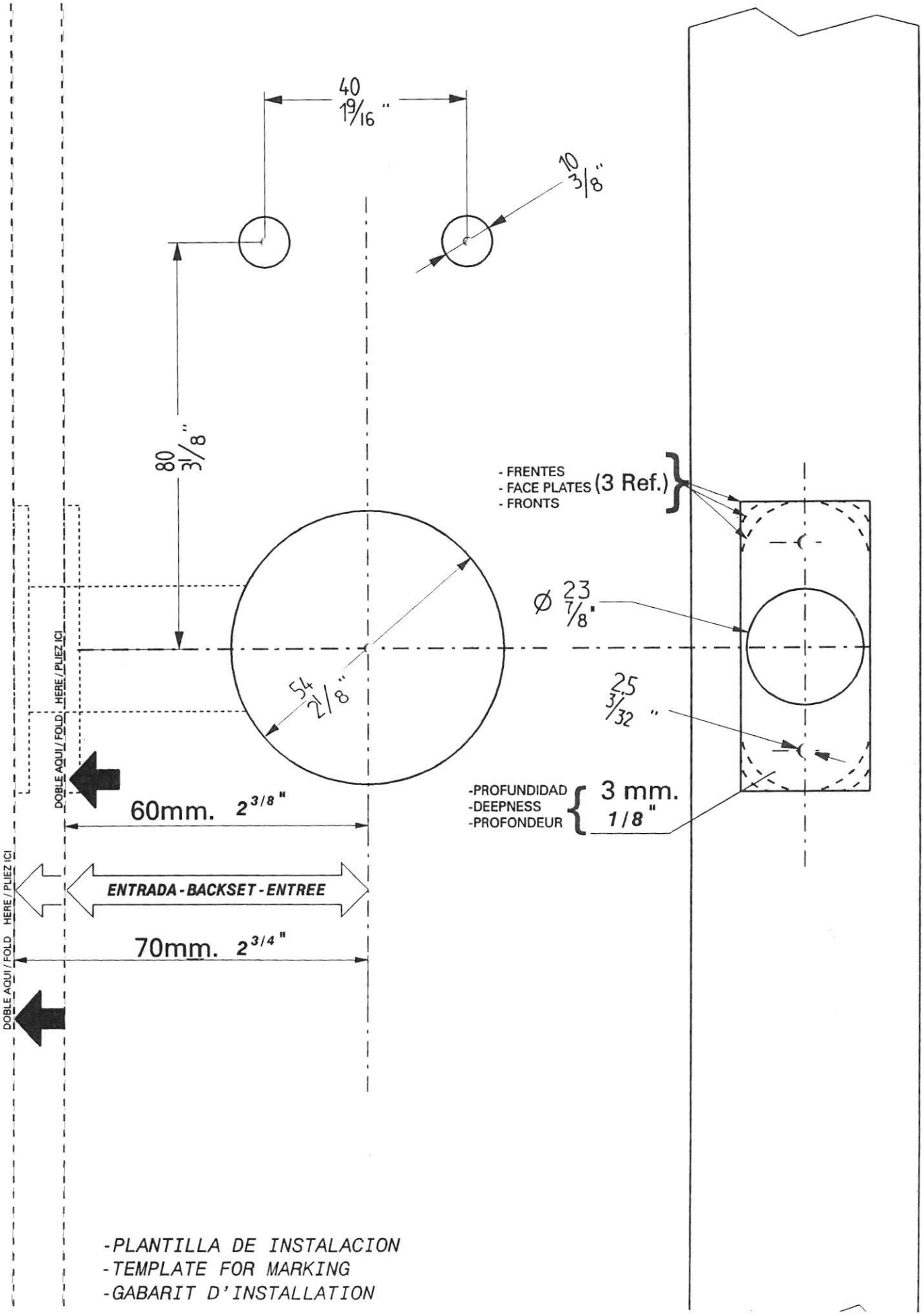

-PLANTILLA DE INSTALACION
-TEMPLATE FOR MARKING
-GABARIT D'INSTALLATION

HT2IP21325GRA4 (TES