SPECIAL PACKAGING INSTRUCTION

CODE ID	SPI NO. (TPO)
98747	F01-055-9510
	SHEET 1 OF 5

PART OR DRAWING NO.	NATIONAL STOCK NO.	CURRENT REV
1685T100-5	1680-01-085-4423 WF	H

ITEM NOMENCLATURE: ACTUATOR, ELECTRO-MECHNICAL, LINEAR

ORIGINAL DATE: 79030

ILL. D. NAY
P.S. K. RESTORFF
CHK. S. PEELER
AUTH. N. CORONADO

MILITARY PRESERVATION IAW MIL-STD-2073

SERVICEABLE METHOD: 20
UNSERVICEABLE METHOD: 20
QUP 001
ICQ 000
CLEANING & DRYING: IAW MIL-STD-2073
PRESERVATIVE: MIL-PRF-16173 CODE 02 ▷1
MIL-PRF-23827 CODE 11

MARKING IAW MIL-STD-129

SPECIAL MARKINGS:
A) SPI NO. F01-055-9510
MARK THE SPI NUMBER ON THE IDENTIFICATION SIDE OF CONTAINER.

B) REUSABLE CONTAINER & DUNNAGE DO NOT DESTROY.

CLOSURE

LEVEL A: IAW: ASTM D6880
LEVEL B: IAW: ASTM D1974

PACKING AS SPECIFIED BELOW AND BILL OF MATERIALS

LEVEL	SPEC	STYLE	TYPE	CL	VRTY	GR	TR
A	ASTM D6880 (MOD)	4		2			B
B	ASTM D5118	FTC				V3c	

	LEVEL A	LEVEL B
GROSS CU FT	2.595	1.699
GROSS WT LBS	62	30
DESIGN FRAGILITY G	35	35

	LENGTH	WIDTH	DEPTH
CNTR I.D.			
LEVEL A:	54 1/2	11 1/2	5 1/4
LEVEL B:	53	10	4 1/2
CNTR O.D.			
LEVEL A:	57 1/2	13	6
LEVEL B:	54 1/8	11 1/8	4 7/8
ITEM DIM	50	8	3 1/4
ITEM WT.	26 LBS		

REVISIONS		
LTR	DESCRIPTION	DATE
H	UPDATED BOM, CHANGED DIMENSIONS, ADDED DISTRIBUTION STATEMENT AND DESTRUCTION NOTICE	18044

DISTRIBUTION STATEMENT D: DISTRIBUTION AUTHORIZED TO DEPARTMENT OF DEFENSE AND U.S. DOD CONTRACTORS ONLY, ADMINISTRATIVE OR OPERATIONAL USE, 13 FEBRUARY 2018. OTHER REQUESTS FOR THIS DOCUMENT SHALL BE REFERRED TO 406 SCMS/GULAA, (PACKAGING DIVISION), HILL AFB, UTAH 84056.

DESTRUCTION NOTICE: FOLLOW THE PROCEDURES IN DOD 5220.22-M, NATIONAL INDUSTRIAL SECURITY PROGRAM OPERATING MANUAL (NISPOM), SECTION 5-705, OR DOD 5200.1-R, INFORMATION SECURITY PROGRAM, CHAPTER VI. FOR UNCLASSIFIED, LIMITED DOCUMENTS, DESTROY BY ANY METHOD THAT WILL PREVENT DISCLOSURE OF CONTENTS OR RECONSTRUCTION OF THE DOCUMENT.

SPECIAL PACKAGING INSTRUCTION	CODE ID 98747	SPI NO. (TPO) F01-055-9510
ITEM NOMENCLATURE ACTUATOR, ELECTRO-MECHNICAL, LINEAR		SHEET 2 OF 5

P/N	QTY REQD	NOMENCLATURE OR DESCRIPTION	SIZE: (INCHES UNLESS SPECIFIED) TOLERANCES ON FRAC. ± ⅛, DECIMAL ± .10, ANGLES ± 1°	MATERIAL SPECIFICATION
-9	A/R	TAPE, FILAMENT	3/4 X AS REQUIRED	ASTM D5330 TYPE II
-8	1	WRAP	55 X 25	A-A-3174 TYPE I, CLASS 1, GRADE A, FIN 1
-7	A/R	TAPE, MASKING	1 X AS REQUIRED	ASTM D6123 TYPE I OR II 1
-6	A/R	WRAP, BARRIER	AS REQUIRED	MIL-PRF-121 TYPE I 1
-5	1	CUSHION CUT OUT	14 1/2 X 10 X 2 1/2	A-A-59135 CLASS 1, GRADE A 2 B
-4	1	CUSHION CUT OUT	10 X 6 X 2 1/2	A-A-59135 CLASS 1, GRADE A 2 A
-3	2	CUSHIONING, TOP & BOTTOM	14 1/2 X 10 X 1	A-A-59135 CLASS 1, GRADE A 2
-2	2	CUSHIONING, TOP & BOTTOM	10 X 6 X 1	A-A-59135 CLASS 1, GRADE A 2
-1	2	TOP & BOTTOM (LEVEL A ONLY)	56 X 13 X 3/8	A-A-55057 TYPE A

CAUTION NOTICES

NOTICE 1: ASSETS PACKAGED IN ACCORDANCE WITH PREVIOUS EDITIONS OF THIS SPI DO NOT REQUIRE REPACKAGING IF THE INTEGRITY OF THE SPI IS MAINTAINED.

NOTICE 2: SEE SPIRES FOR A COMPLETE LISTING OF NSN's ASSIGNED TO THIS SPI.

NOTICE 3: PACKAGING MATERIAL MAY BE SUBSTITUTED IF IT MEETS THE REQUIREMENTS OF MIL-STD-2073, PROVIDES EQUAL OR BETTER PROTECTION AND THERE IS NO INCREASED COST TO THE GOVERNMENT.

NOTICE 4: FOR LEVEL A PACKAGING REQUIREMENTS, LEVEL B PACKS SHALL BE OVERBOXED IN A LEVEL A SPECIFIED CONTAINER SHOWN ON PAGE 1 UNDER PACKAGING LEVEL A.

NOTICE 5: OVERSEAS AND FMS PACKAGING MUST MEET THE REQUIREMENTS OF LEVEL A PACKAGING.

INTERNATIONAL STANDARDS FOR PHYTOSANITARY MEASURES
REVISION OF ISPM NO. 15
REVISION OF WOOD PACKAGING MATERIAL FOR INTERNATIONAL TRADE

THE FOLLOWING STATEMENT IS IN COMPLIANCE WITH THE UNITED NATIONS-IMPLEMENTED RESTRICTIONS ON WOOD PACKAGING MATERIAL (WPM). THIS REQUIREMENT IS SPECIFICALLY CONCERNED WITH INVASIVE SPECIES SUCH AS THE PINEWOOD NEMATODE. WPM IS DEFINED AS WOOD PALLETS, SKIDS, LOAD BOARDS, PALLET COLLARS, WOODEN BOXES, REELS, DUNNAGE, CRATES, FRAMES, AND CLEATS. THE STATEMENT BELOW CITES THE REQUIREMENTS IN DETAIL AND COVERS LUMBER FOR BUILDING CONTAINERS AND PALLETS USED FOR DELIVERIES, RESULTING IN SHIPMENTS WORLDWIDE (DIRECT, OR THROUGH AIR LOGISTICS CENTERS (ALC), CONTAINER CONSOLIDATION POINTS (CCP), OR OTHER BASES).

WOODEN LUMBER, WOODEN PALLET AND PACKAGING/CONTAINER STATEMENT:

ALL WOODEN LUMBER, WOODEN PALLETS, AND WOODEN CONTAINERS PRODUCED ENTIRELY OR IN PART OF WOOD PACKAGING MATERIAL (WPM) SHALL BE CONSTRUCTED FROM DEBARKED WOOD IN ADDITION TO THE APPLICATION OF HEAT-TREATED (HT) MATERIAL (HT TO 56 DEGREES CENTIGRADE OR 133 DEGREES FAHRENHEIT FOR 30 MINUTES). CERTIFICATION/MARKING IS REQUIRED BY AN ACCREDITED AGENCY RECOGNIZED BY THE AMERICAN LUMBER STANDARDS COMMITTEE (ALSC). FOR REFERENCE DOCUMENTATION, SEE LATEST REVISION OF "INTERNATIONAL STANDARDS FOR PHYTOSANITARY MEASURES (ISPM NO. 15), "REGULATION OF WOOD PACKAGING MATERIAL IN INTERNATIONAL TRADE."

NOTES

1. APPLY MIL-PRF-16173, CODE 2, PRESERVATIVE TO ALL CRITICAL SURFACES AND MIL-PRF-23827, CODE 11 TO BEARINGS. COVER TREATED PARTS WITH BARRIER WRAP, REF.-6, SECURED WITH TAPE, REF.-7.

2. USE ADHESIVE A-A-1936 TO LAMINATE REF.-4 AND -5 TO BOTTOM PADS -2 AND -3 ASSEMBLED CUSHIONS WILL ACT AS END CAPS FOR THE ITEM. ENSURE ASSEMBLED PADS ARE SECURELY ON THE ITEM WHEN REMOVING OR PLACING ITEM IN PACKAGING.

SPECIAL PACKAGING INSTRUCTION	CODE ID 98747	SPI NO. (TPO) F01-055-9510
ITEM NOMENCLATURE ACTUATOR, ELECTRO-MECHNICAL, LINEAR		SHEET 4 OF 5

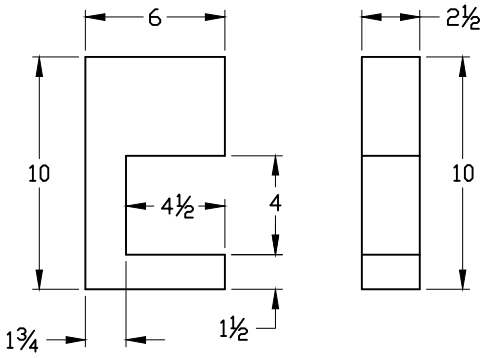

DETAIL A -4

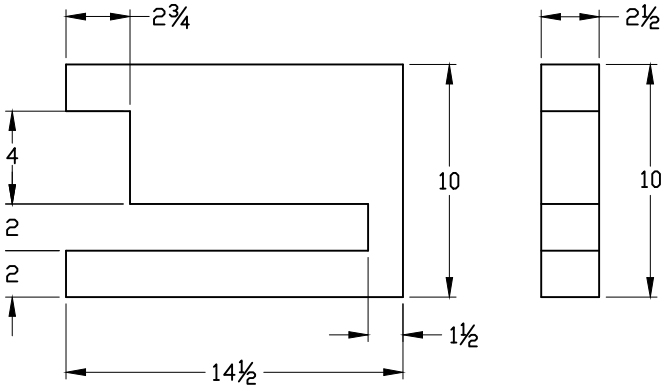

DETAIL B -5
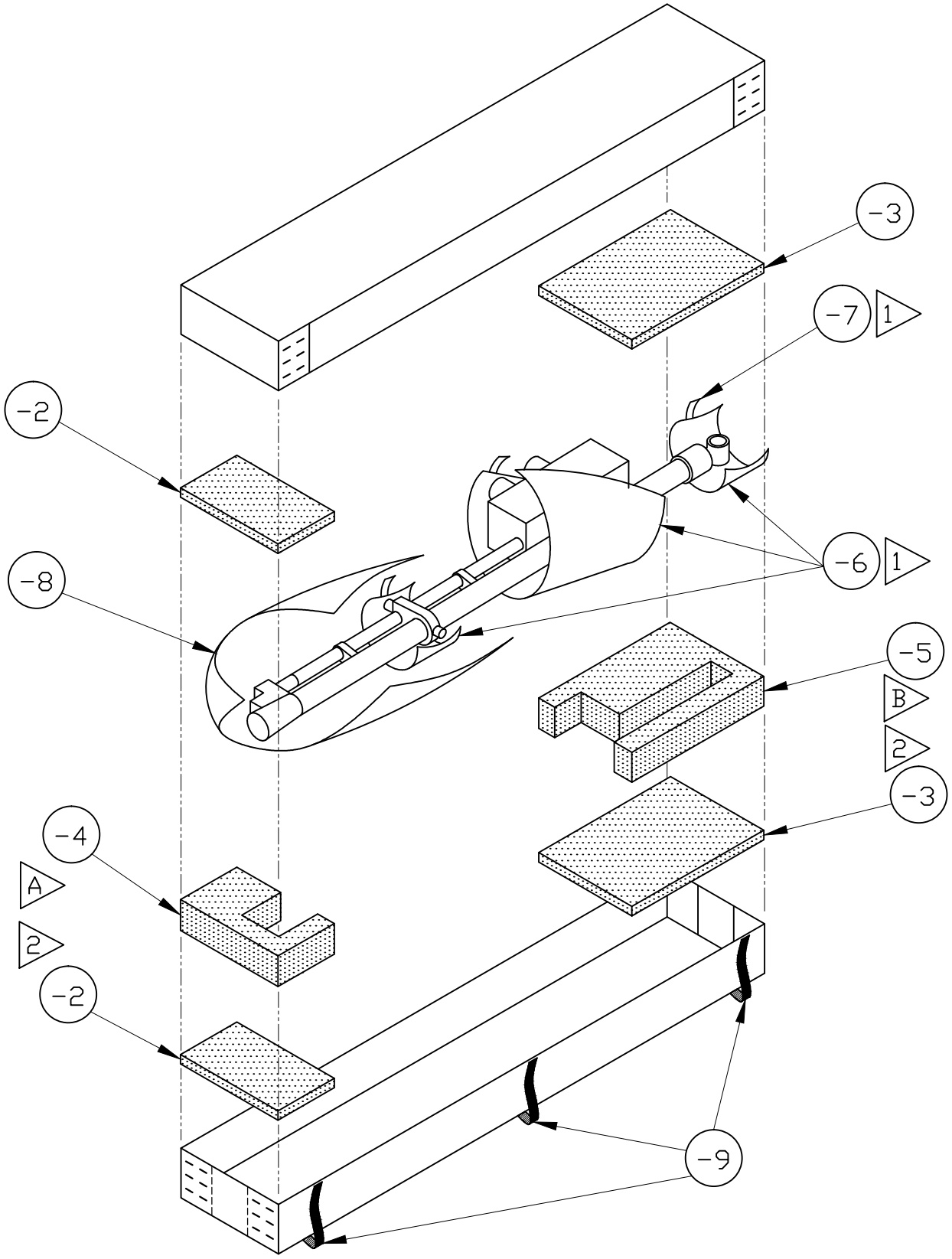
SPECIAL PACKAGING INSTRUCTION	CODE ID 98747	SPI NO. (TPO) F01-055-9510
ITEM NOMENCLATURE ACTUATOR, ELECTRO-MECHNICAL, LINEAR		SHEET 5 OF 5