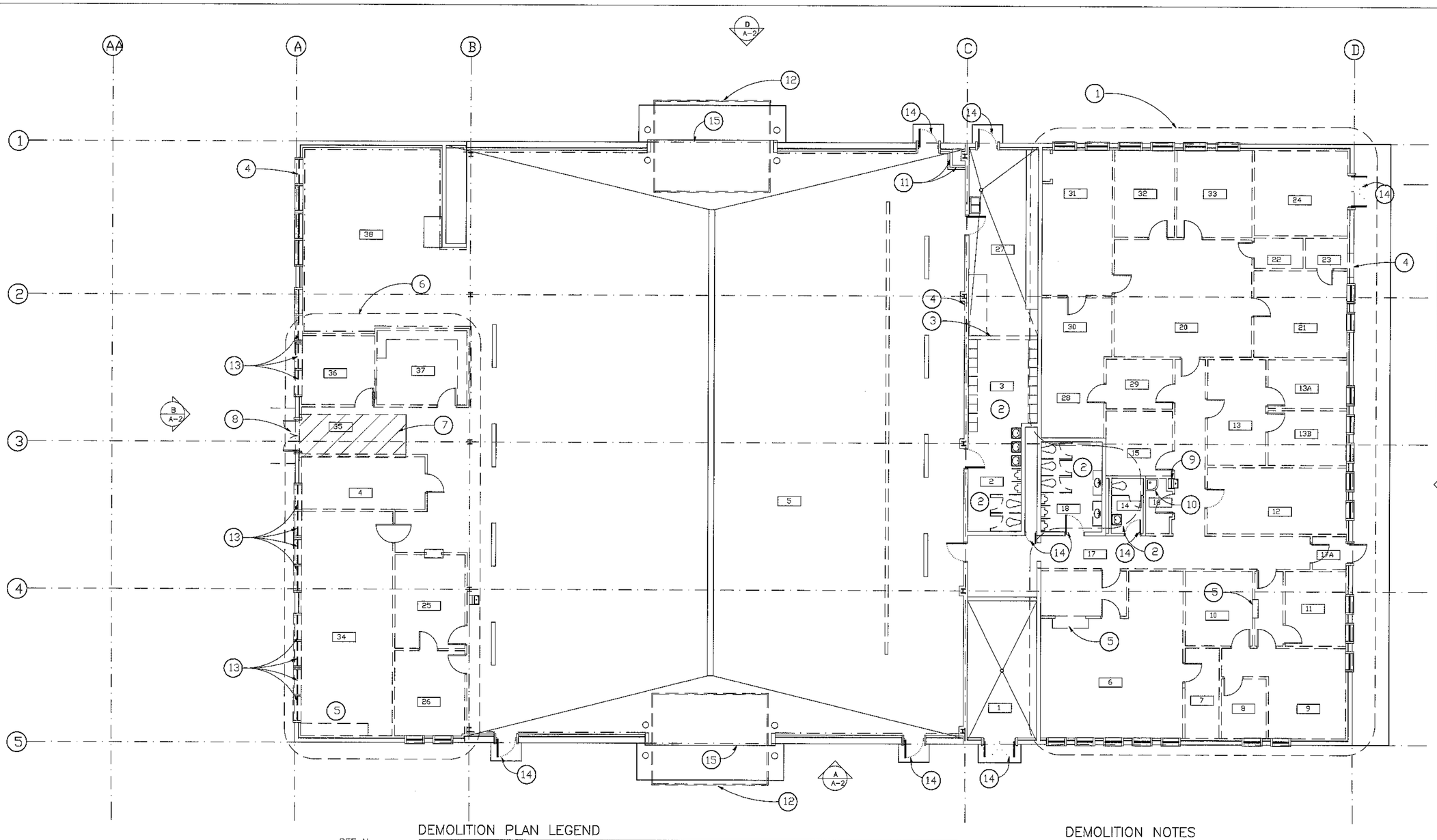

1	MECHANICAL ROOM
2	TOILET
3	LOCKER ROOM
4	BENCH STOCK
5	MAINTENACE ROOM
6	REPORTS & ANALYSIS ROOM
7	KEY PUNCH ROOM
8	SUPERINTENDANTS ROOM
9	CHIEF DISPATCHER
10	TAXI DISPATCHER
11	DRIVERS LOUNGE
12	QC & E OFFICE
13	ADMINISTRATION OFFICE
13A	OFFICE
13B	OFFICE
14	WOMENS RESTROOM
15	TRANSPORTATION
16	JANITOR
17	CORRIDOR
17A	ENTRY VESTIBULE
18	MENS RESTROOM
19	
20	CLASSROOM3
21	TESTING ROOM
22	PROJECTION ROOM
23	BOOK STORAGE
24	STORAGE
25	PRODUCTION CONTROL
26	MAINTENANCE OFFICE
27	BATTERY SHOP
28	COMMANDING OFFICER
29	SECRETARY
30	OFFICE
31	OFFICE
32	OFFICE
33	OFFICE
34	BREAKROOM
35	CORRIDOR
36	LIBRARY
37	TOOL ROOM
38	DRUM STORAGE

1 A-1 DEMOLITION FLOOR PLAN

SCALE: 1/8" = 1'-0"

REF. N.

N

DEMOLITION PLAN LEGEND

1. DEMO ALL EXISTING STUD WALLS, FINISHES, DOORS & FRAMES, EXTERIOR WALL FURRING & FINISHES, CEILINGS, AND FLOORINGS. PREPARE & LEVEL FLOORS FOR NEW FLOORINGS, AND PREPARE EXTERIOR WALLS FOR NEW FURRING, INSULATION AND FINISHING.
2. REMOVE ALL TOILET PARTITIONS, LOCKERS, WALL FINISHES, CEILINGS, FLOORINGS, VANITIES, AND TOILET ACCESSORIES. PREPARE FLOORS & WALLS FOR NEW FINISHES AS REQUIRED.
3. REMOVE EXISTING MASONRY WALL. CLEAN AND PREPARE FLOOR AND WALLS FOR FINISHES AT THE CONNECTION POINTS OF THE REMOVED WALL.
4. REMOVE PORTION OF MASONRY WALL TO ALLOW FOR THE INSTALLATION OF A NEW HOLLOW METAL DOOR FRAME. AT ONE LOCATION. THE EXISTING WINDOW WILL ALSO NEED REMOVED.
5. REMOVE EXSITING CASE WORK AND PRESENT TO THE GOVERNMENT
6. REMOVE EXISTING WOOD STUD WALLS, FINISHES, DOORS & FRAMES, CEILINGS, AND FLOORINGS. PREPARE FLOOR FOR NEW FINISHES AS NECESSARY.
7. DEMO EXISTING CONCRETE FLOOR SLAB FOR INSTALLATION OF NEW CONCRETE RAMP INTO NEW ADDITION
8. REMOVE EXISTING EXTERIOR HOLLOW METAL DOOR & FRAME, AND DEMO 2' OF FOUNDATION WALL BELOW DOOR TO ALLOW FOR INSTALLATION OF NEW RAMP INTO NEW ADDITION.
9. REMOVE EXISTING WATER COOLER AND ALL WATER, SEWER, OR VENT LINES ASSOCIATED WITH IT. PRESENT COOLER TO THE GOVERNMENT
10. REMOVE EXISTING MOP SINK AND ALL WATER LINES ASSOCIATED WITH IT. CAP OFF SEWER LINE BELOW FLOOR LEVEL
11. DEMO EXISTING WALLS & ABANDONED EXHAUST SYSTEM. PREPARE WALLS FOR NEW FURRING AND FINISHES
12. SAWCUT AND REMOVE PORTIONS OF CONCRETE FLOOR, APRON AND ASPHALT AS NECESSARY TO INSTALL NEW GROUND LOOP SENSORS AS SHOWN ON ELECTRICAL.
13. REMOVE EXISTING ALUMINUM WINDOWS AND PRECAST CONCRETE SILL. PREPARE OPENING FOR BLOCK INFILL (10 TYP.)
14. REMOVE HOLLOW METAL DOOR & FRAME – PREP FOR INSTALLATION OF NEW DOOR & FRAME
15. REMOVE OVERHEAD DOOR, TRACK & ASSOCIATED HARDWARE PREP FOR INSTALLATION OF NEW DOORS

— · — REMOVE & DISPOSE OF (AS PER SPECS) ASBESTOS PANELS. WHEN TAKING PANELS OFF OF WALLS WHICH ARE NOT BEING REMOVE, TAKE CARE NOT TO DAMAGE WALL BEYOND REPAIR.

— — — SIGNIFIES MATERIALS TO BE REMOVED. PRESENT CERTAIN ITEMS TO GOVERNMENT AS PER SPECS.

DEMOLITION NOTES

1. PORTIONS OF BUILDING 882 WHICH ARE TO BE DEMO'D CONTAIN ASBESTOS AS REPORTED IN THE ASBESTOS REPORT IN THE SPECIFICATIONS. READ ASBESTOS REPORT FOR LOCATIONS & DESCRIPTIONS OF MATERIALS WHICH CONTAIN ASBESTOS AND PROCEDURES ON ABATEMENT.
2. THE ONLY LEAD PAINT IDENTIFIED IS LOCATED ON THE PIPE BOLLARDS. THESE WILL JUST BE REPAINTED, SO THERE SHOULD BE NO ABATEMENT REQUIRED.

SPACE COMMAND

MALMSTROM AIR FORCE BASE, MONTANA

AS BUILT

REV.	DATE	DESCRIPTION	DRAWN	APPR'D

DRAWN BY FITZPATRICK	TRANSPORTATION FACILITY, BUILDING 882		PROJECT NUMBER NZAS 93-0107
DESIGNED BY FITZPATRICK	DEMOLITION FLOOR PLAN		ACAD DRAWING NUMBER 93107A01
REVIEWED BY RADKE	SCALE 1/8"=1'-0"	DATE 17NOV97 PLATE A-1 PAGE 3 OF 44	RECORD FILE NUMBER

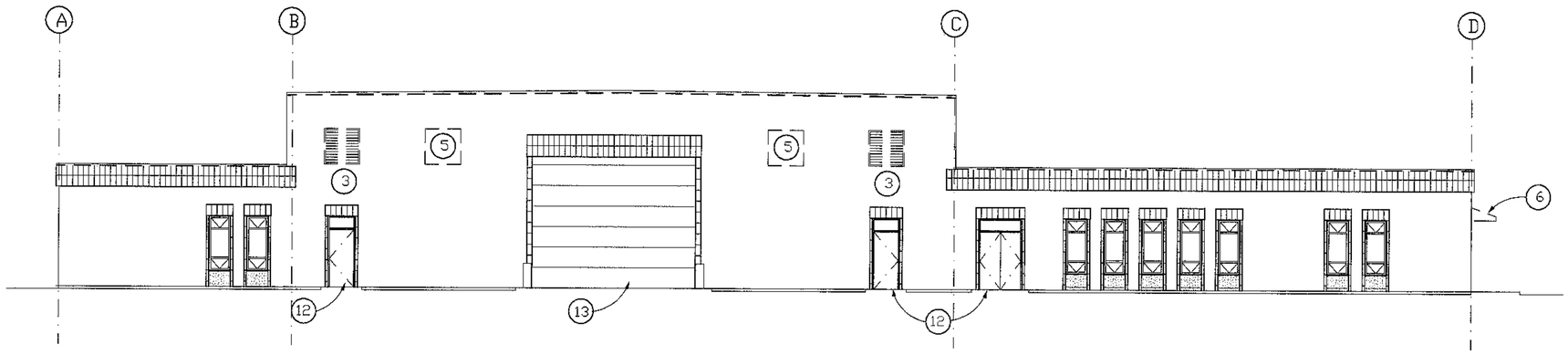

A/A-2 SOUTH DEMO. ELEVATION 'A'

SCALE: 1/8" = 1'-0"

DEMOLITION PLAN LEGEND

1. REMOVE ALL EXISITING EXTERIOR METAL SIDING AND PREPARE FOR INSTALLATION OF NEW SIDING
2. REMOVE EXISTING 4'-0"X4'-0" ALUMINUM WINDOWS AND INFILL WITH METAL STUDS & SHEATHING TO MATCH EXISTING. PATCH INTERIOR WALL WITH MATCHING METAL PANELS.
3. REMOVE EXISTING MECHANICAL LOUVERS. PREPARE OPENING FOR NEW WINDOWS
4. REMOVE PORTION OF MASONRY WALL TO ALLOW FOR THE INSTALLATION OF A NEW HOLLOW METAL DOOR FRAME. AT ONE LOCATION, THE EXISTING WINDOW WILL ALSO NEED REMOVED.
5. DEMO 4'-4"X4'-4" SQUARE OF EXISTING BLOCK WALL. WRAP RAW EDGES WITH CHANNELS TO CLEAN UP FOR INSTALLATION OF NEW WINDOWS. SEE MECH FOR SIZE OF NEW LOUVERS
6. REMOVE EXISTING ENTRY CANOPY AND CLEAN WALL FOR INSTALLATION OF NEW INSULATION
7. REMOVE EXISTING WINDOWS AND PRECAST SILL. PREPARE FOR INFILL W/ BLOCK
8. REMOVE 3'-4" X 8'-8" PORTION OF EXISTING MASONRY WALL FOR INSTALLATION OF NEW DOOR
9. REMOVE EXISTING DOOR & HARDARE FROM FRAME.
10. REMOVE EXISTING HOLLOW METAL DOOR & FRAME. PREPARE OPENING FOR INSTALLATION OF NEW ALUMINUM DOOR
11. SAWCUT & REMOVE PORTION OF PROTRUDING WINDOW HEAD & JAMBS WHERE THE NEW WALL INTERSECTS & WHERE THE NEW EXTERIOR METAL HAS TO BE INSTALLED.
12. REMOVE HOLLOW METAL DOOR & FRAME, PREP FOR INSTALLATION OF NEW
13. REMOVE OVERHEAD DOOR, PREP FOR INSTALLATION OF NEW

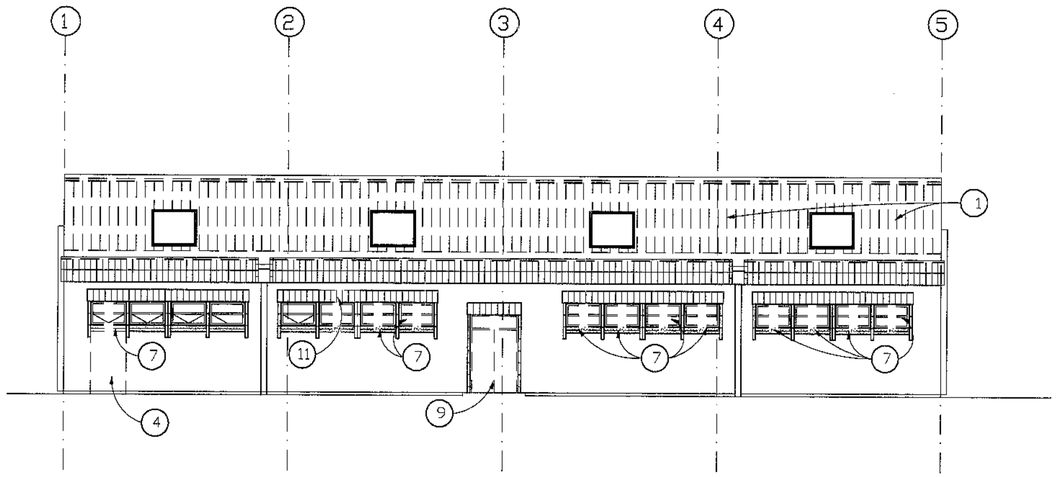

B/A-2 WEST DEMO. ELEVATION 'B'

SCALE: 1/8" = 1'-0"

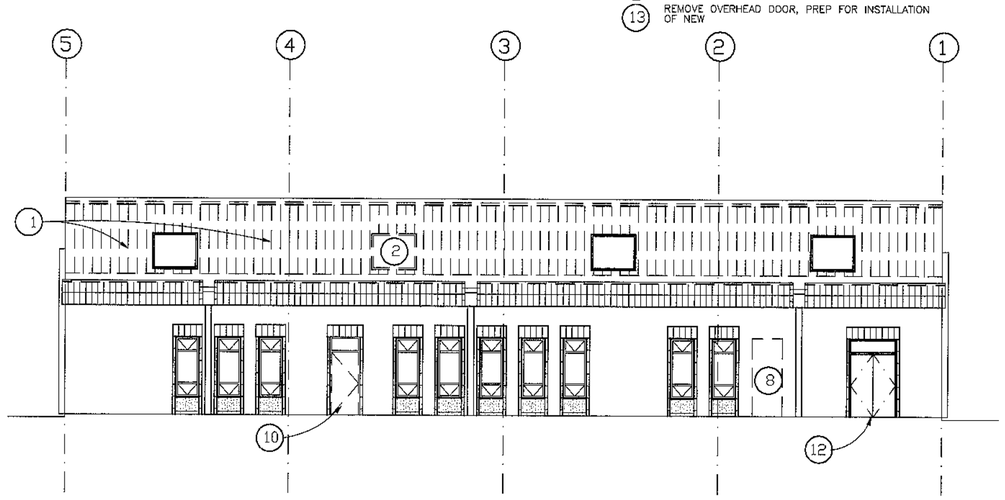

C/A-2 EAST DEMO. ELEVATION 'C'

SCALE: 1/8" = 1'-0"

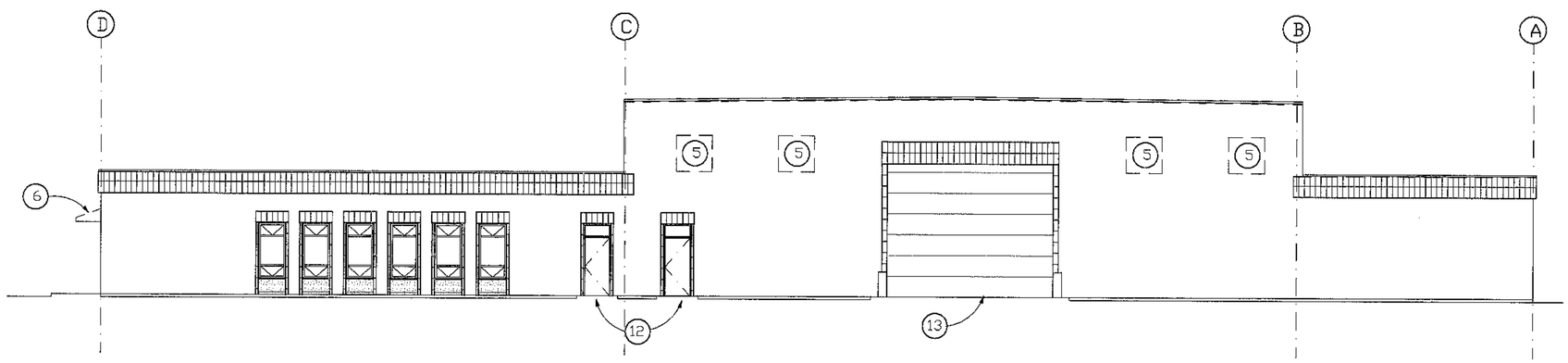

D/A-2 NORTH DEMO. ELEVATION 'D'

SCALE: 1/8" = 1'-0"

AS BUILT

REV.	DATE	DESCRIPTION	DRAWN	APPR'D

DRAWN BY FITZPATRICK
DESIGNED BY FITZPATRICK
REVIEWED BY RADKE

TRANSPORTATION FACILITY, BUILDING 882

DEMO. EXTERIOR ELEVATIONS

SCALE 1/8"=1'-0" | DATE 17NOV97 | PLATE A-2 | PAGE 4 OF 44

PROJECT NUMBER NZAS 93-0107
ACAD DRAWING NUMBER 9310/A02
RECORD FILE NUMBER

SPACE COMMAND
MALMSTROM AIR FORCE BASE, MONTANA

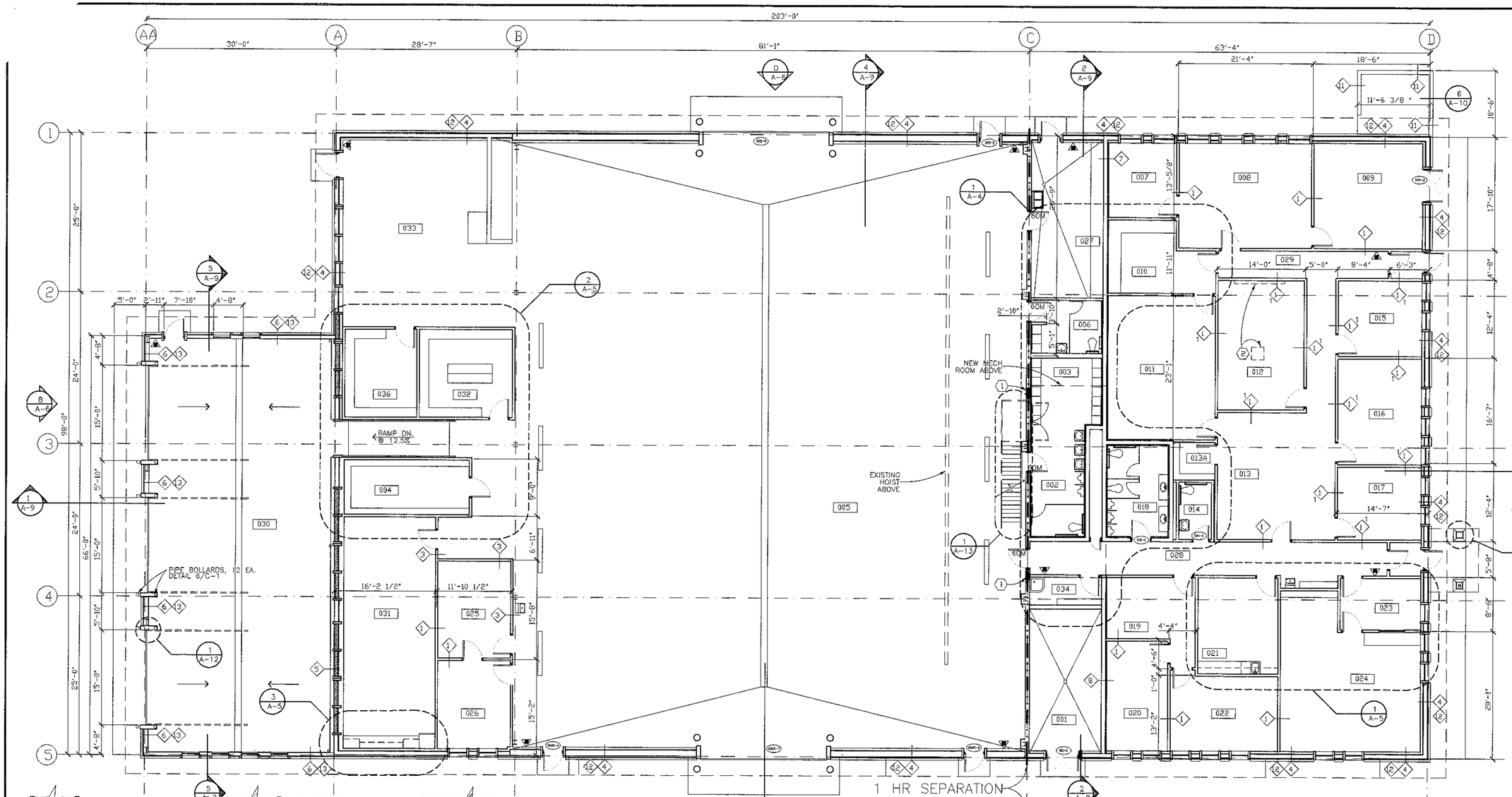

001	MECHANICAL ROOM
002	MENS TOILET
003	MENS LOCKER ROOM
004	BENCH STOCK
005	AUTO MAINTENACE ROOM
006	WOMENS LOCKER ROOM
007	LGTR OFFICER
008	LGTR NCOIC
009	MOBILITY STORAGE
010	COMPUTER TRAINING
011	QUALITY, SAFETY, & TRAINING
012	CONFERENCE ROOM
013	ADMINISTRATION
013A	ADMINISTRATION CLOSET
014	WOMENS TOILET
015	CCF OFFICE
016	CC OFFICE
017	CCQ OFFICE
018	MENS TOILET
019	LGTO ADMINISTRATION
020	LGTO NCOIC
021	BREAK ROOM
022	LGTO OFFICER
023	FLEET WAITING
024	FLEET MANAGEMENT
025	OFFICE
026	OFFICE
027	BATTERY ROOM
028	CORRIDOR
029	CORRIDOR
030	AUTOMOTIVE MAINTENANCE SHOP
031	MAINTENANCE BREAK ROOM
032	TOOL STORAGE
033	METALS SHOP
034	JANITOR
035	MECHANICAL ROOM ABOVE
036	LIBRARY

PLAN NOTES

1. ALL HOLES LEFT BE MECHANICAL DUCTS, GRILLES, ETC. REMOVED FROM THE 1 HR SEPARATION WALL MUST BE FILLED IN WITH CMU MATCHING THE THICKNESS OF THE WALL AND DOWELED INTO THE TOP & BOTTOM CMU BLOCKS WITH 2– #4 BARS IN BOTH THE TOP & BOTTOM.
2. APPROXIMATELY 10 WINDOW SECTIONS WILL HAVE TO BE REPLACED WHERE WINDOW MOUNTED A/C UNITS WERE REMOVED. CONTRACTOR IS TO VERIFY EXACT NUMBER SIZE AND CONFIGURATION
3. ALL EXISTING SIGNAGE ON BUILDING MUST MUST BE REMOVED AND REPLACED IN THE SAME LOCATION AFTER THE NEW SIDING HAS BEEN INSTALLED
4. ALL EXISTING WINDOW & DOOR HEAD, JAMB, AND SILL CMU & CONCRETE MUST BE REPAINTED WITH FEDERAL COLOR # 23578. SEE SPECIFICATIONS
5. RESTRIPE ALL EXISTING STRIPING IN CONTRACT AREA.

PLAN LEGEND

(1) PATCH HOLES IN EXISTING BLOCK WALL AFTER MECHANICAL EQUIPMENT HAS BEEN REMOVED. SIM. TO STRUCT DETAIL 15/S-3. SEE M-2 FOR MORE INFO. ON LOCATIONS.

(2) OVERHEAD PROJECTOR & MOTORIZED 8'X8' SCREEN. PROJECTOR IN NIC BUT THE SCREEN AND HANGER FOR PROJECTOR IS TO BE PROVIDED & INSTALLED BY THE CONTRACTOR

▼ FIRE EXTINGUISHER CABINET LOCATIONS

ALL PENETRATIONS THROUGH WALLS, PARTITIONS AND RACEWAYS BE IT EXISTING AFTER DEMOLITION OR INSTALLED DURING CONSTRUCTION SHALL BE PROVIDED WITH AN EXPANDABLE FOAM FILLER.

ANY PENETRATIONS THROUGH WALLS THAT ARE FIRE RELATED WALLS, PARTITIONS AND RACEWAYS BE IT EXISTING AFTER DEMOLITION OR INSTALLED DURING CONSTRUCTION SHALL BE "FIRESTOPPED" WITH THE APPROPRIATE UL RATED FIRESTOPPING MATERIAL.

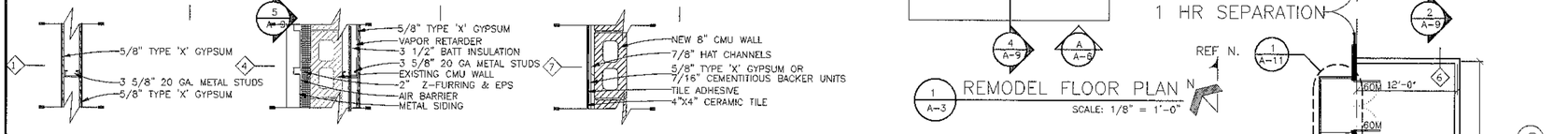

WALL TYPE LEGEND

SCALE: 3/4" = 1'-0"

1. EXTEND WALL TO BOTTOM OF ROOF DECK, AND INSULATE WITH 3 1/2" SOUND ATTENUATION BLANKETS

REMODEL FLOOR PLAN

SCALE: 1/8" = 1'-0"

MECHANICAL ROOM ABOVE

SCALE: 1/8" = 1'-0"

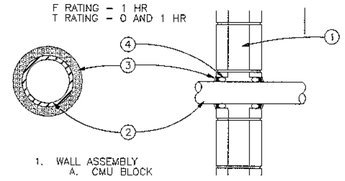

1. WALL ASSEMBLY
   A. CMU BLOCK
2. THROUGH PENETRANTS
   A. STEEL PIPE
   B. CONDUIT
3. FILL W/ FIRESTOP SEALANT
4. PACKING MATERIAL

WALL PENETRATION FIRESTOP

NOT TO SCALE

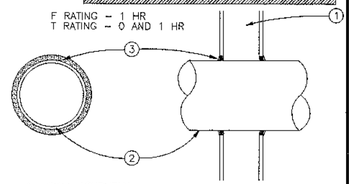

1. WALL ASSEMBLY
   A. STUDS
   B. GYPSUM BOARD
2. THROUGH PENETRANTS
   A. GALVANIZED DUCT
3. FILL W/ FIRESTOP SEALANT

WALL PENETRATION FIRESTOP

NOT TO SCALE

AS BUILT

REV.	DATE	DESCRIPTION	DRAWN	APPR'D

SPACE COMMAND
MALMSTROM AIR FORCE BASE, MONTANA

DRAWN BY FITZPATRICK	TRANSPORTATION FACILITY, BUILDING 882		PROJECT NUMBER NZAS 93-0107
DESIGNED BY FITZPATRICK	REMODEL FLOOR PLAN		ACAD DRAWING NUMBER 93107A03
REVIEWED BY SHEPARD	SCALE 1/8"=1'-0"	DATE 17NOV97	PLATE A-3 PAGE 5 OF 44

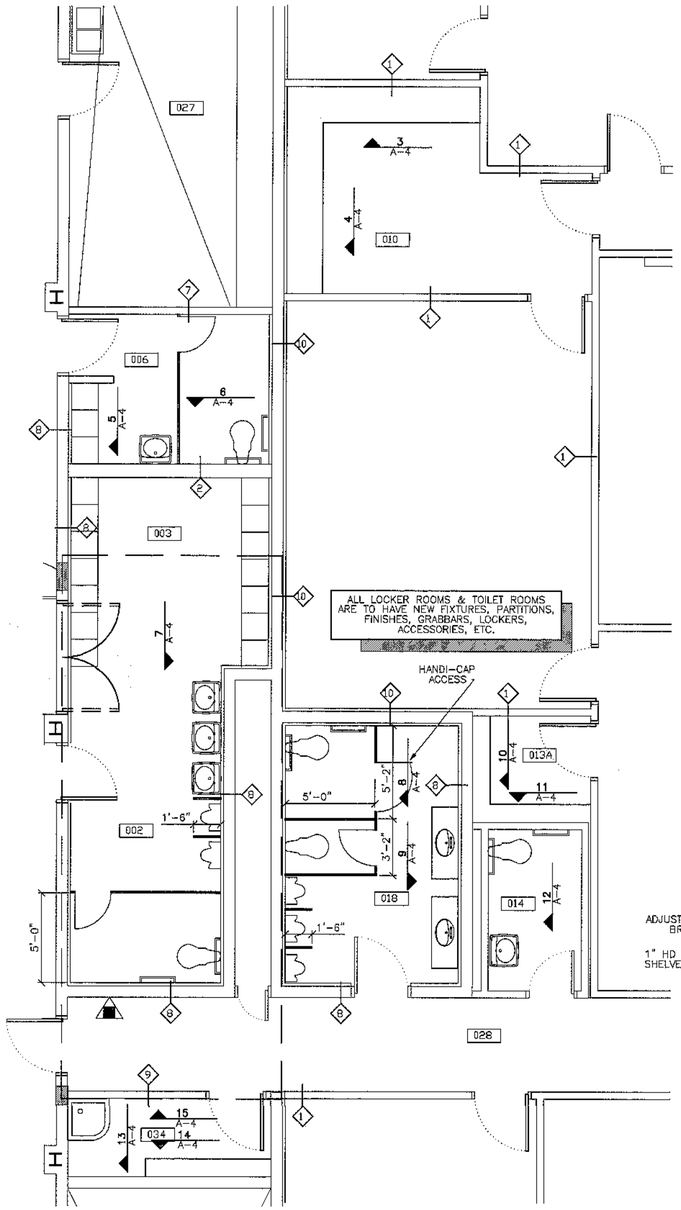

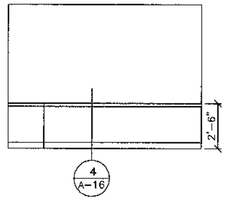

4 A-16

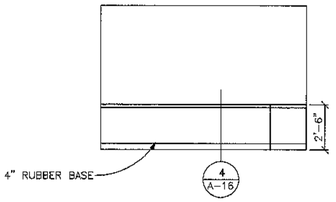

4 A-16

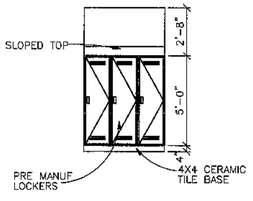

2 NOT USED
A-4 SCALE: 1/4"=1'-0"

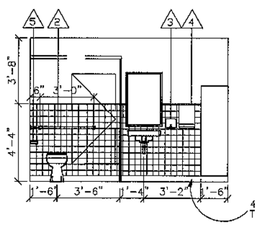

3 COMPUTER TRAINING
A-4 SCALE: 1/4"=1'-0"

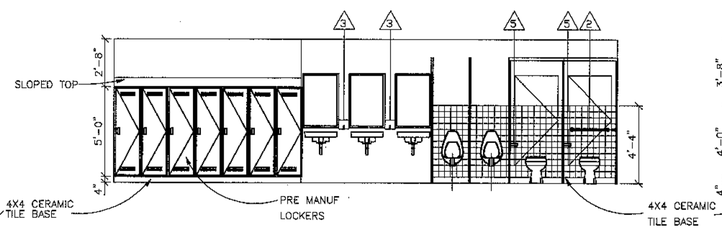

4 COMPUTER TRAINING
A-4 SCALE: 1/4"=1'-0"

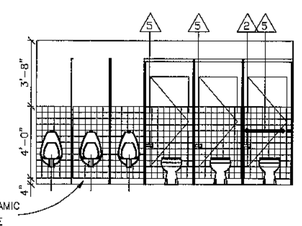

5 WOMENS LOCKERS
A-4 SCALE: 1/4"=1'-0"

6 WOMENS LOCKER ROOM
A-4 SCALE: 1/4"=1'-0"

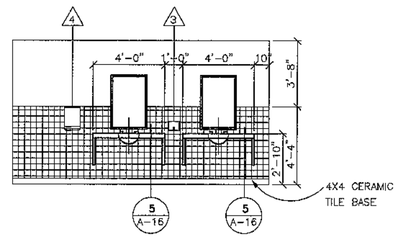

5 A-16 5 A-16

7 MENS LOCKERS/TOILET REFER TO 1/A-4 FOR ACTUAL LAYOUT
A-4 SCALE: 1/4"=1'-0"

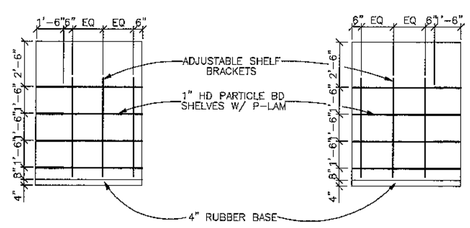

8 MENS TOILET REFER TO 1/A-4 FOR ACTUAL LAYOUT
A-4 SCALE: 1/4"=1'-0"

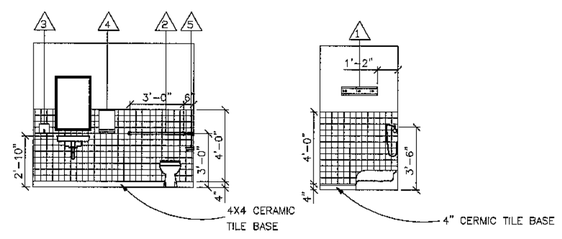

9 MENS TOILET
A-4 SCALE: 1/4"=1'-0"

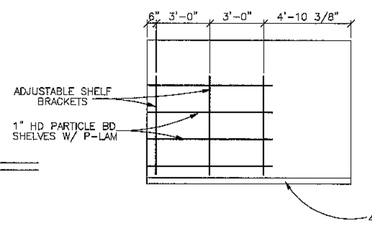

10 ADMINISTRATION CLOSET
A-4 SCALE: 1/4"=1'-0"

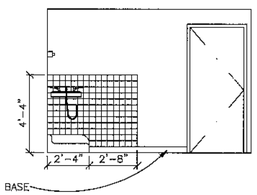

11 ADMINISTRATION CLOSET
A-4 SCALE: 1/4"=1'-0"

12 WOMENS TOILET
A-4 SCALE: 1/4"=1'-0"

13 JANITOR
A-12 SCALE: 1/4"=1'-0"

14 JANITOR
A-4 SCALE: 1/4"=1'-0"

15 JANITOR
A-4 SCALE: 1/4"=1'-0"

ACCESSORIES KEY

NO.	MARK	DESCRIPTION	MOUNTING	HEIGHTS
1	A	MOP & BROOM HOLDER	WALL/ SURFACE	72" TO TOP
2		TOILET GRAB BAR	WALL/ SURFACE	36" TO CTR
3		SOAP DISPENSER	WALL/ SURFACE	36" TO BTM
4		TOWEL DISPENSER	WALL/ SURFACE	472" TO BTM
5		TOILET PAPER HOLDER	WALL/ SURFACE	26" TO CTR

1 A-4 TOILET & LOCKER ROOM ENLARGED PLANS
SCALE: 1/4" = 1'-0"

AS BUILT

REV.	DATE	DESCRIPTION	DRAWN	APPR'D

DRAWN BY FITZPATRICK
DESIGNED BY FITZPATRICK
REVIEWED BY RADKE

TRANSPORTATION FACILITY, BUILDING 882
ENLARGED PLANS & INTERIOR ELEVATIONS

SCALE 1/8"=1'-0" | DATE 17NOV97 | PLATE A-4 | PAGE 6 OF 44

PROJECT NUMBER NZAS 93-0107
ACAD DRAWING NUMBER 93107A04
RECORD FILE NUMBER

SPACE COMMAND
MALMSTROM AIR FORCE BASE, MONTANA

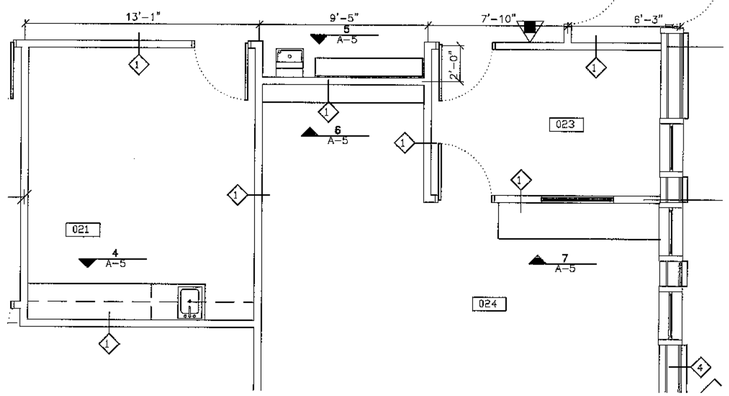

1 A-5 BREAK ROOM & FLEET MANAG ENLARGED PLAN

SCALE: 1/4" = 1'-0"

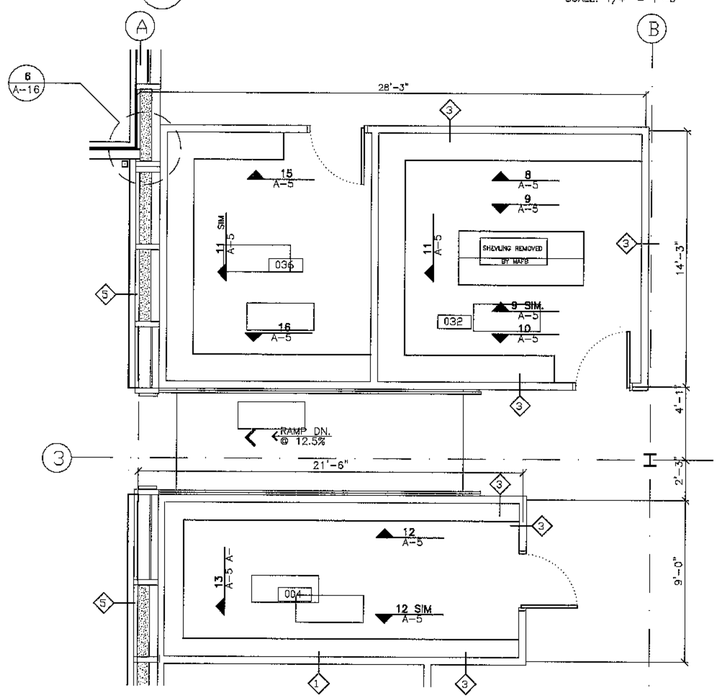

2 A-5 BENCH STOCK & TOOL ROOM ENLARGED PLANS

SCALE: 1/4" = 1'-0"

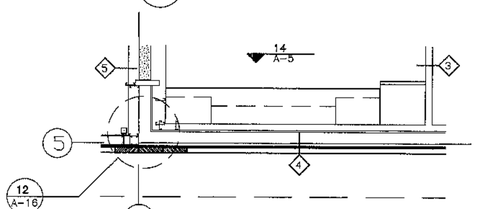

3 A-5 MAINTENANCE BREAK ROOM ENLARGED PLAN

SCALE: 1/4" = 1'-0"

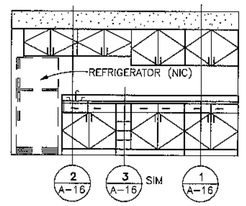

4 A-5 BREAK ROOM

SCALE: 1/4"=1'-0"

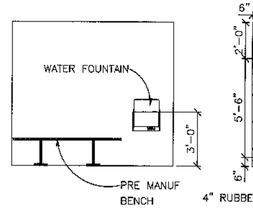

5 A-5 DRINKING FOUNT.

SCALE: 1/4"=1'-0"

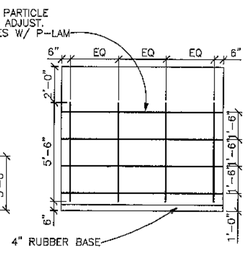

6 A-5 FLEET MANAG

SCALE: 1/4"=1'-0"

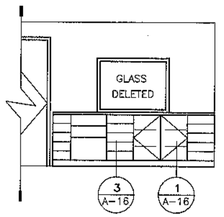

7 A-5 FLEET MANAG

SCALE: 1/4"=1'-0"

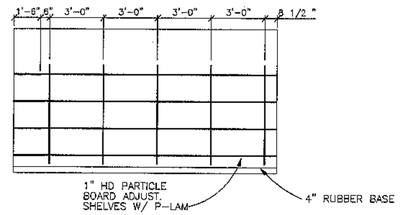

8 A-5 TOOL STORAGE

SCALE: 1/4"=1'-0"

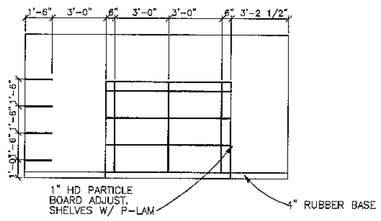

9 A-5 TOOL STORAGE

SCALE: 1/4"=1'-0"

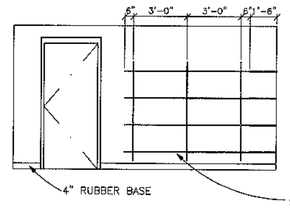

10 A-5 TOOL STORAGE

SCALE: 1/4"=1'-0"

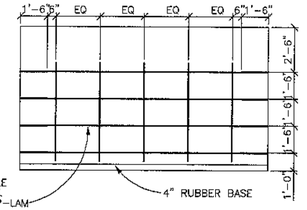

11 A-5 TOOL STORAGE

SCALE: 1/4"=1'-0"

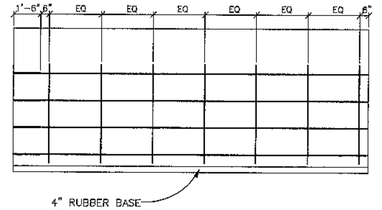

12 A-5 BENCH STOCK / LIBRARY

SCALE: 1/4"=1'-0"

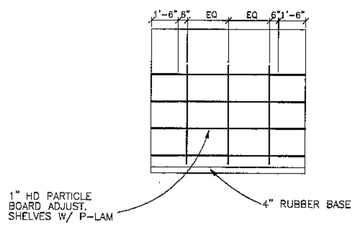

13 A-5 BENCH STOCK

SCALE: 1/4"=1'-0"

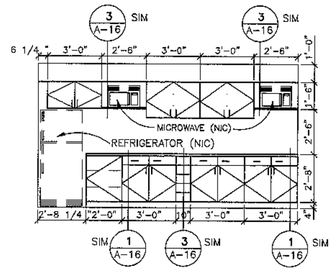

14 A-5 MAINT. BREAK ROOM

SCALE: 1/4"=1'-0"

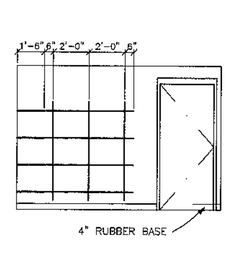

15 A-5 LIBRARY

SCALE: 1/4"=1'-0"

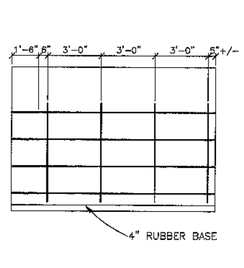

16 A-5 LIBRARY

SCALE: 1/4"=1'-0"

ALL ADJUSTABLE SHELVING IS TO BE CONSTRUCTED FROM 1" HD PARTICLE BOARD & COVERED W/ P-LAM

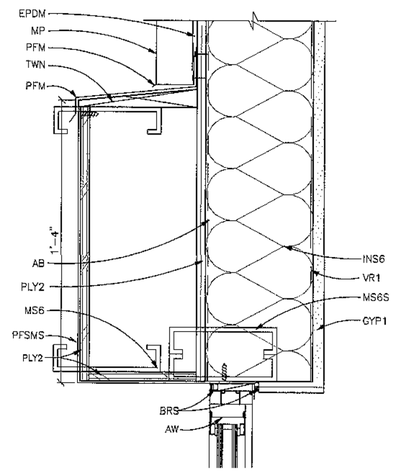

17 A-5 ALUM. WINDOW HEAD

SCALE: 3"=1'0"

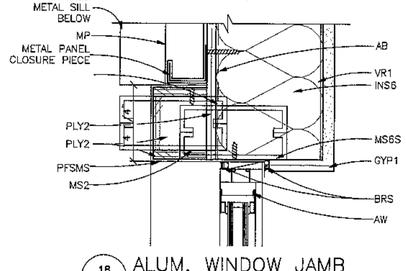

18 A-5 ALUM. WINDOW JAMB

SCALE: 3"=1'0"

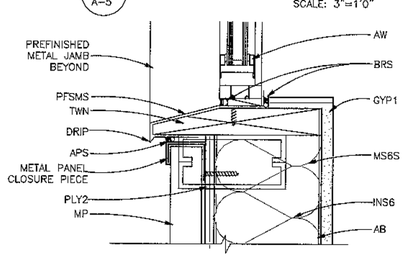

19 A-5 ALUM. WINDOW SILL

SCALE: 3"=1'0"

AS BUILT

REV.	DATE	DESCRIPTION	DRAWN	APPR'D

DRAWN BY FITZPATRICK	TRANSPORTATION FACILITY, BUILDING 882		PROJECT NUMBER NZAS 93-0107
DESIGNED BY FITZPATRICK	ENLARGED PLANS & INTERIOR ELEVATIONS		ACAD DRAWING NUMBER 93107A05
REVIEWED BY RADKE	SCALE 1/4"=1'-0"	DATE 17NOV97 PLATE A-5 PAGE 7 OF 44	RECORD FILE NUMBER

SPACE COMMAND

MALMSTROM AIR FORCE BASE, MONTANA

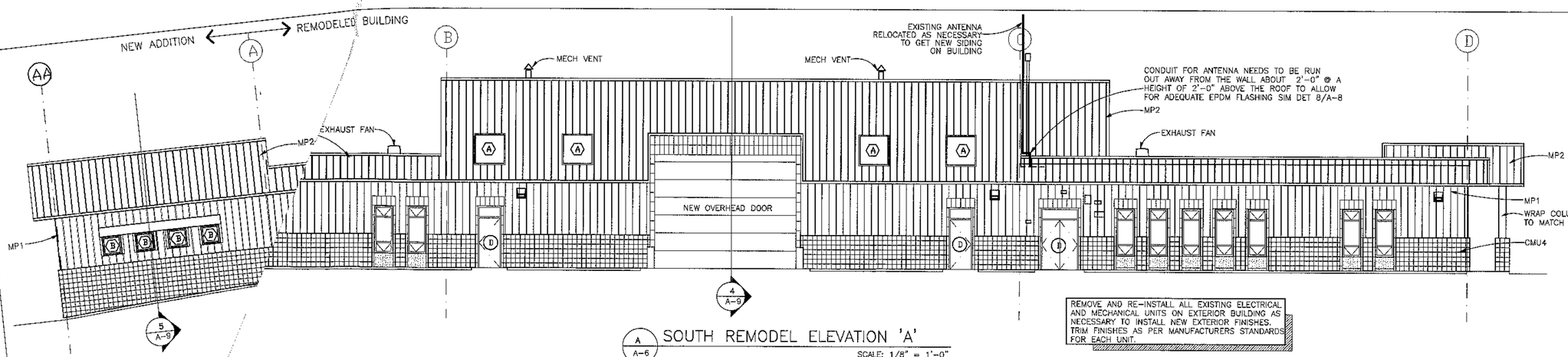

FINISH NOTES

ALL NON-PREFINISHED METAL INCLUDING DOORS, FRAMES, MECHANICAL UNITS, ETC... MUST BE POWDERCOATED. FEDERAL COLOR #37056.

REMOVE AND RE-INSTALL ALL EXISTING ELECTRICAL AND MECHANICAL UNITS ON EXTERIOR BUILDING AS NECESSARY TO INSTALL NEW EXTERIOR FINISHES. TRIM FINISHES AS PER MANUFACTURERS STANDARDS FOR EACH UNIT.

A / A-6 SOUTH REMODEL ELEVATION 'A'

SCALE: 1/8" = 1'-0"

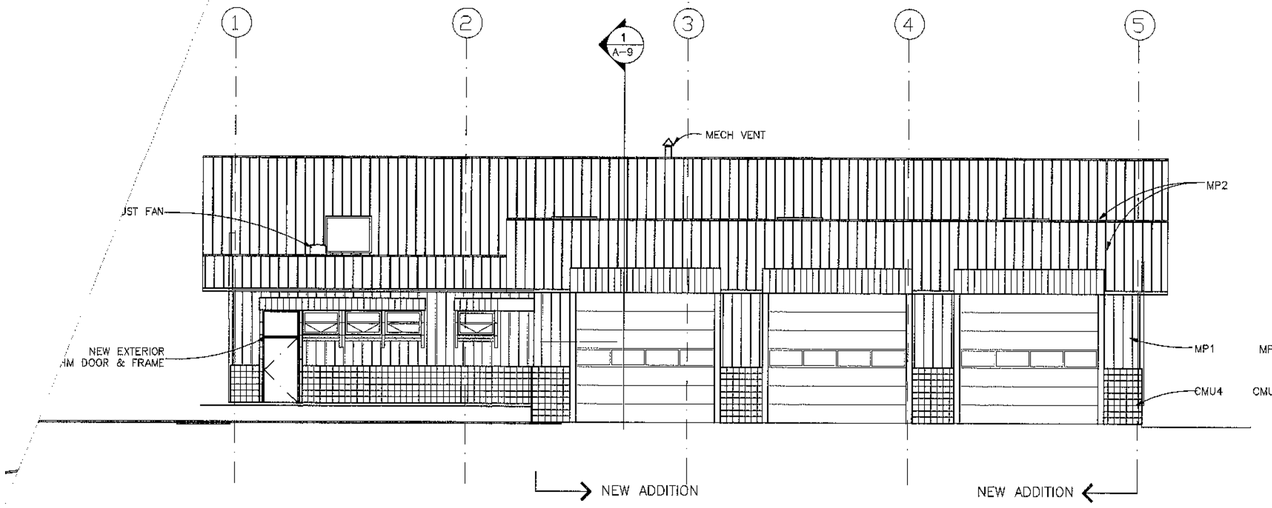

B / A-6 WEST REMODEL ELEVATION 'B'

SCALE: 1/8" = 1'-0"

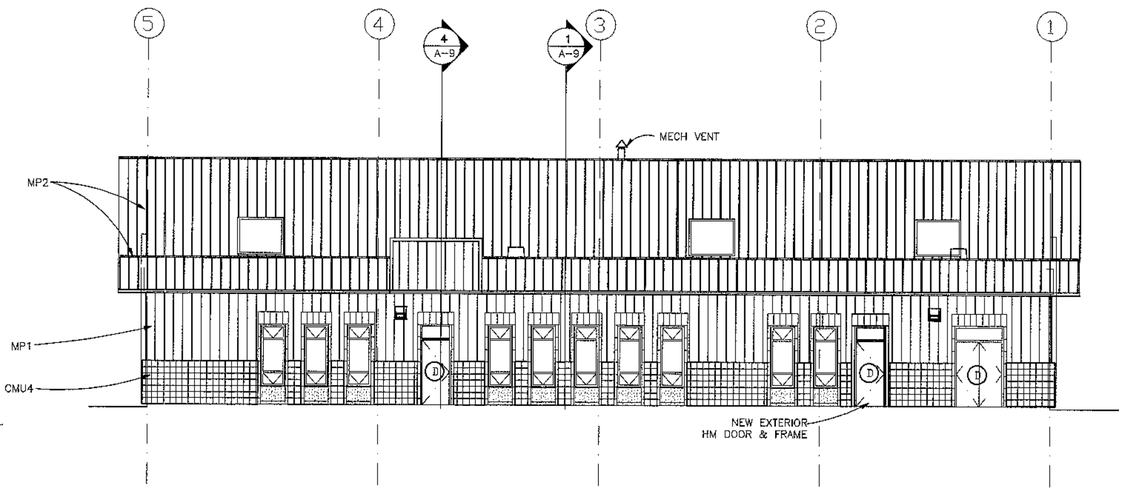

C / A-6 EAST REMODEL ELEVATION 'D'

SCALE: 1/8" = 1'-0"

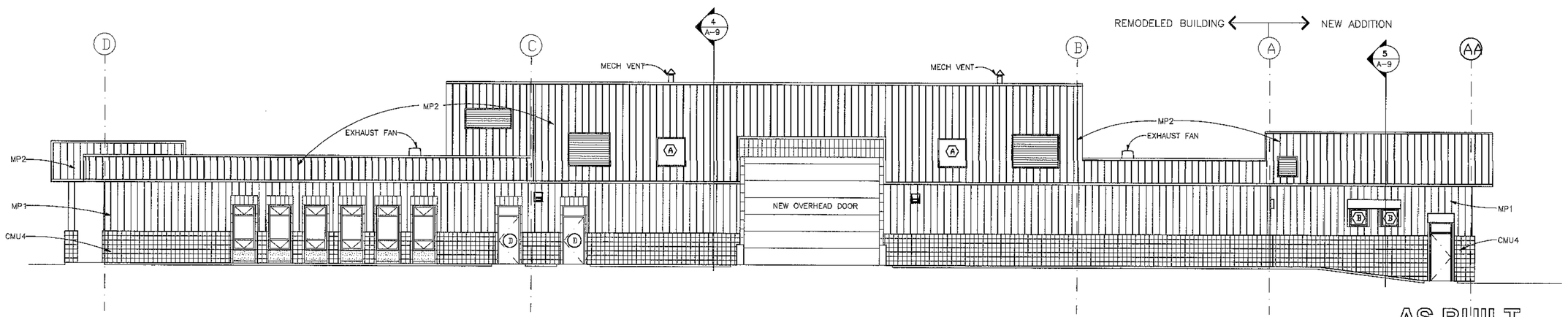

D / A-6 NORTH REMODEL ELEVATION 'C'

SCALE: 1/8" = 1'-0"

AS BUILT

REV.	DATE	DESCRIPTION	DRAWN	APPR'D

DRAWN BY FITZPATRICK	TRANSPORTATION FACILITY, BUILDING 882		PROJECT NUMBER NZAS 93-0107
DESIGNED BY FITZPATRICK	REMODEL EXTERIOR ELEVATIONS		ACAD DRAWING NUMBER Q:\MALMSTOM\93107A06
REVIEWED BY RADKE	SCALE 1/8"=1'-0"	DATE 17NOV97 / PLATE A-6 / PAGE 8 OF 44	RECORD FILE NUMBER

SPACE COMMAND

MALMSTROM AIR FORCE BASE, MONTANA

ROOF NOTES

1. ALL SLOPES ARE TO BE 1/4" PER FT MIN UNLESS OTHERWISE NOTED. ALL EXISTING STRUCTURE SLOPES @ 1/8" PER FT IN DIRECTION OF WATER DRAINAGE.
2. EXISTING BUILT UP ROOFING CONTAINS ASBESTOS. SEE ASBESTOS REPORT IN SPECIFICATIONS, SECTION 02085–ASBESTOS ABATEMENT.
3. ALL ROOFS WILL HAVE A LAYER OF 1/2" GYPSUM SHEATHING UNDER A MINIMUM OF 2 LAYERS OF 1 1/2" POLYISOCYANURATE. WHERE ADDITIONAL SLOPE IS REQUIRED TO REACH 1/4" PER FT, A LAYER OF TAPERED EPS WILL BE SANDWICHED BETWEEN THE TWO POLYISOCYANURATE LAYERS.
4. EXTEND ALL EXISTING DUCTS, PIPES, ETC. AS NECESSARY TO ACHIEVE 8" MINIMUM CLEARANCE ABOVE THE EPDM FOR ADD THICKNESS OF NEW INSULATION
5. ANY EXISITNG UNUSED PENETRATIONS SUCH AS CURBS, VENTS, ECT. MUST BE REMOVED. ANY HOLE LEFT IN THE METAL ROOF DECK BY REMOVED UNITS, MUST BE COVERED WITH NEW ROOF DECK TO MATCH EXISTING STYLE, GA., ETC AND ROOFED OVER WITH NEW ROOF.
6. ANY EXISTING METAL DECKING WHICH MAY BE RUSTED, OR STRUCTURALLY UNSUITABLE, MUST BE SHOWN TO THE CONTRACTING OFFICERS REPRESENTATIVE AND REPLACED IF THEY FEEL IT IS UNSUITABLE.
7. ALL FIELD SEAMS MUST HAVE A 6" EPDM STRIP-IN PIECE ACCORDING TO ROOFING SPEC 07550

CONDUIT FOR ANTENNA NEEDS TO BE RUN OUT AWAY FROM THE WALL ABOUT 2'-0" @ A HEIGHT OF 2'-0" ABOVE THE ROOF TO ALLOW FOR ADEQUATE EPDM FLASHING SIM DET 8/A-8

REF N.

1 A-7 REMODEL ROOF PLAN
SCALE: 1/8" = 1'-0"

8 A-7 PARAPET CAP DETAIL
SCALE: 3" = 1'-0"

7 A-7 PARAPET DETAIL
SCALE: 1" = 1'-0"

2 A-7 ROOF DETAIL
SCALE: 1" = 1'-0"

3 A-7 ROOF DETAIL
SCALE: 1" = 1'-0"

4 A-7 PARAPET DETAIL
SCALE: 1" = 1'-0"

5 A-7 PARAPET DETAIL
SCALE: 1" = 1'-0"

6 A-7 PARAPET CAP DETAIL
SCALE: 3" = 1'-0"

AS BUILT

SPACE COMMAND
MALMSTROM AIR FORCE BASE, MONTANA

REV.	DATE	DESCRIPTION	DRAWN	APPR'D

DRAWN BY FITZPATRICK	TRANSPORTATION FACILITY, BUILDING 882	PROJECT NUMBER NZAS 93-0107
DESIGNED BY FITZPATRICK	ROOF PLAN	ACAD DRAWING NUMBER 93107A07
REVIEWED BY RADKE	SCALE 1/8"=1'-0" DATE 17NOV97 PLATE A-7 PAGE 9 OF 44	RECORD FILE NUMBER

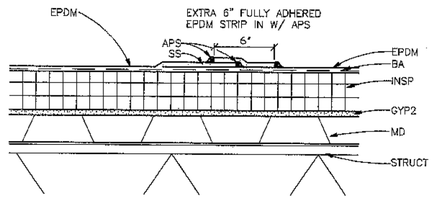

1 / A-8 TYPICAL LAP DETAIL

SCALE: 1 1/2"=1'0"

2 / A-8 NOT USED

SCALE: 1 1/2"=1'0"

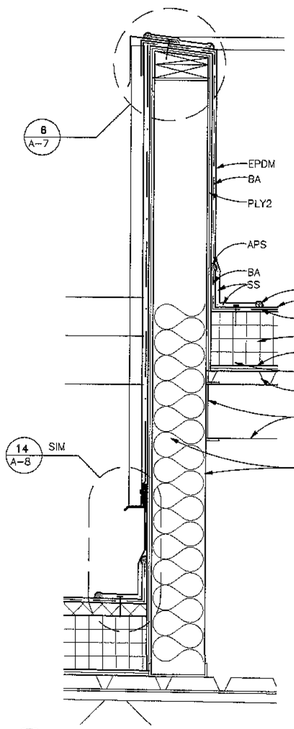

3 / A-8 CANOPY PARAPET DETAIL

SCALE: 1 1/2"=1'-0"

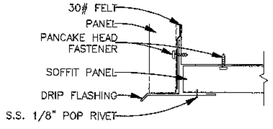

12 / A-8 SOFFIT DETAIL

SCALE: 3"=1'0"

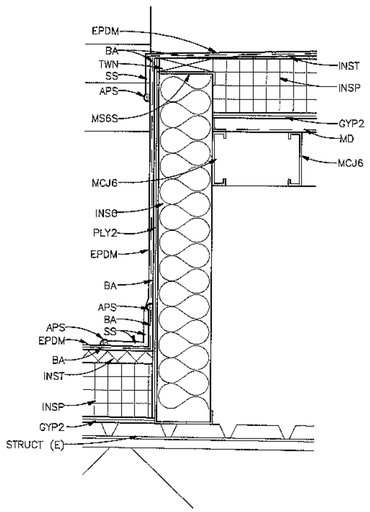

15 / A-8 CANOPY DETAIL

SCALE: 1 1/2"=1'0"

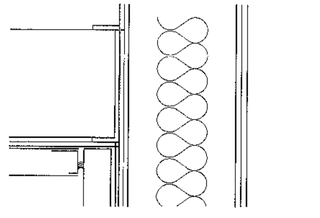

13 / A-8 SOFFIT DETAIL

SCALE: 3"=1'0"

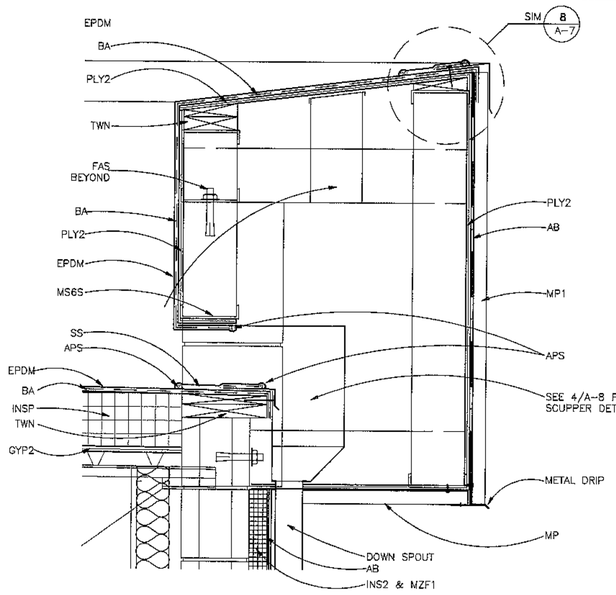

5 / A-8 SCUPPER DETAIL

SCALE: 1 1/2"=1'0"

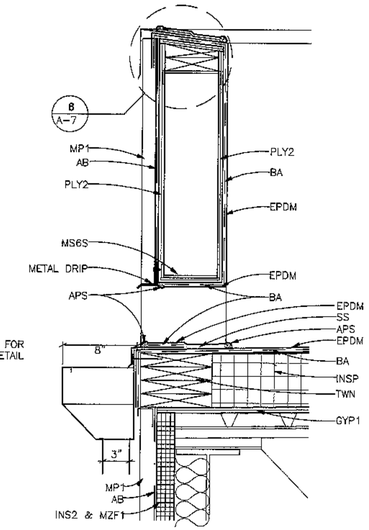

6 / A-8 SCUPPER AND COLLECTOR

SCALE: 1 1/2"=1'0"

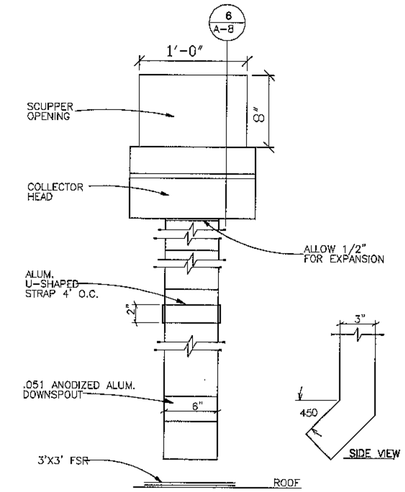

7 / A-8 SCUPPER AND DOWNSPOUT

NOT TO SCALE

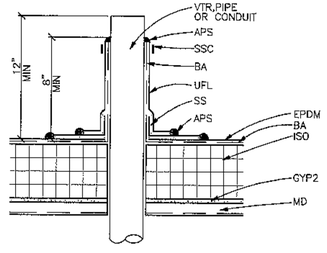

8 / A-8 VENT/CONDUIT SLEEVE

SCALE: 1 1/2"=1'0"

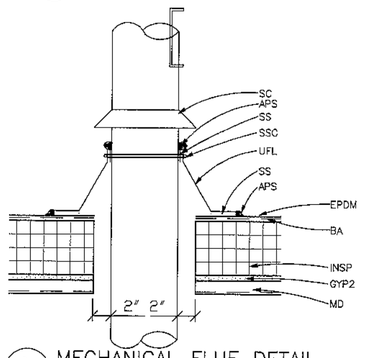

9 / A-8 MECHANICAL FLUE DETAIL

SCALE: 1 1/2"=1'0"

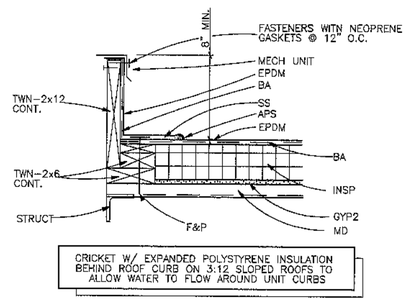

10 / A-8 MECHANICAL CURB DETAIL

SCALE: 1 1/2"=1'0"

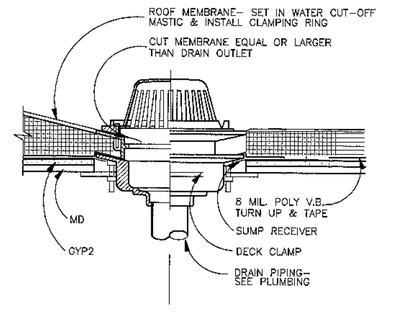

11 / A-8 ROOF DRAIN DETAIL

SCALE: 1 1/2"=1'0"

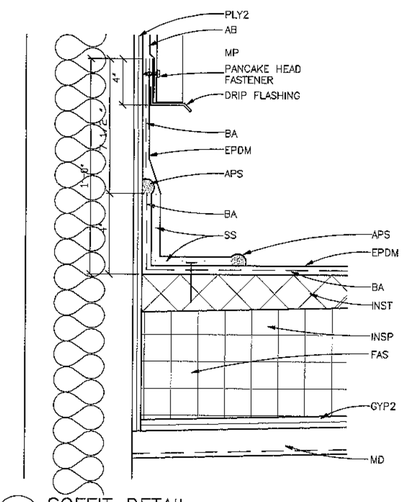

14 / A-8 SOFFIT DETAIL

SCALE: 3"=1'0"

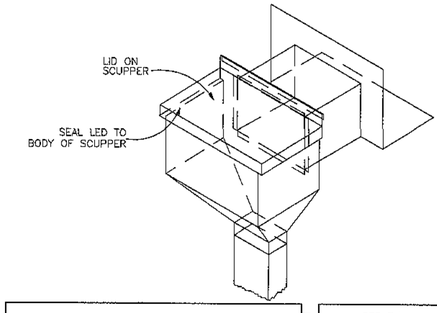

15 / A-8 TYPICAL SCUPPER DETAIL INSIDE SOFFIT

NTS

SPACE COMMAND

MALMSTROM AIR FORCE BASE, MONTANA

AS BUILT

CTA ARCHITECTS
STATE OF MONTANA
LICENSED ARCHITECT
G.L. KOLSTAD 577
K.E. RUPERT 1058
J.G. WERTMAN 1065
J.G. SHEPARD 1088
M.A. TUSS 1483

REV.	DATE	DESCRIPTION	DRAWN	APPR'D

DRAWN BY FITZPATRICK	TRANSPORTATION FACILITY, BUILDING 882	PROJECT NUMBER NZAS 93-0107
DESIGNED BY FITZPATRICK	ROOF DETAILS	ACAD DRAWING NUMBER 93107A08
REVIEWED BY RADKE	SCALE 1"=1'-0" DATE 17NOV97 PLATE A-8 PAGE 10 OF 44	RECORD FILE NUMBER

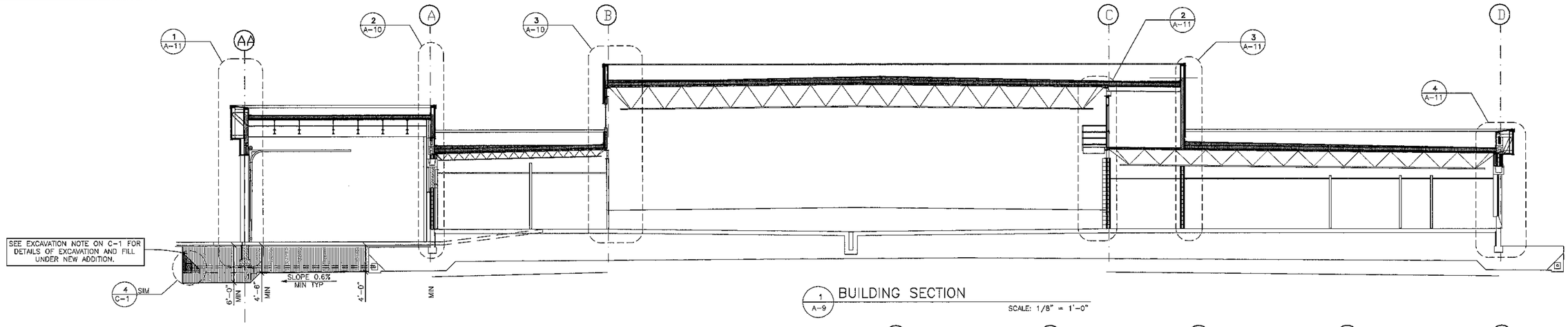

1 A-9 BUILDING SECTION

SCALE: 1/8" = 1'-0"

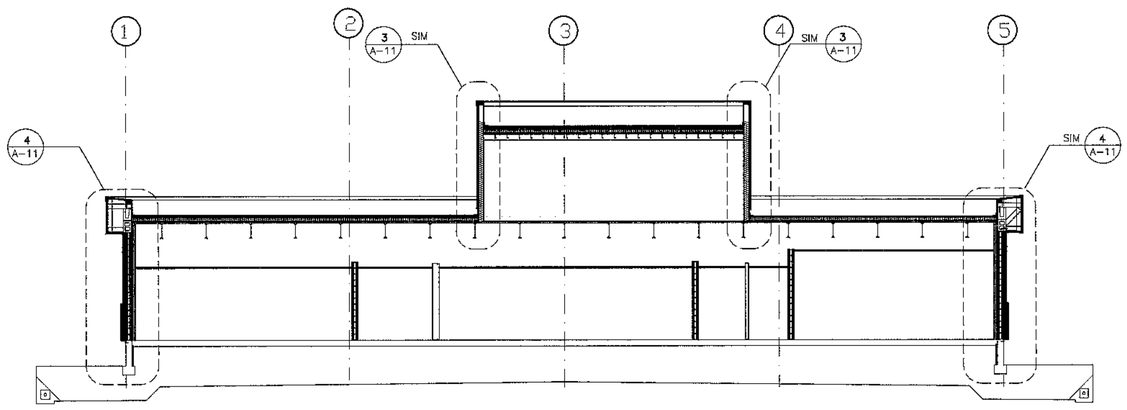

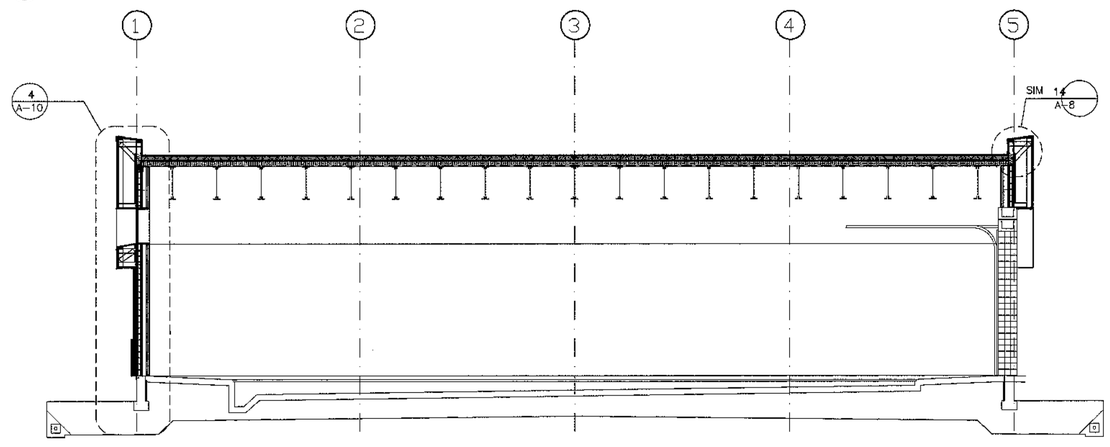

2 A-9 BUILDING SECTION

SCALE: 1/8" = 1'-0"

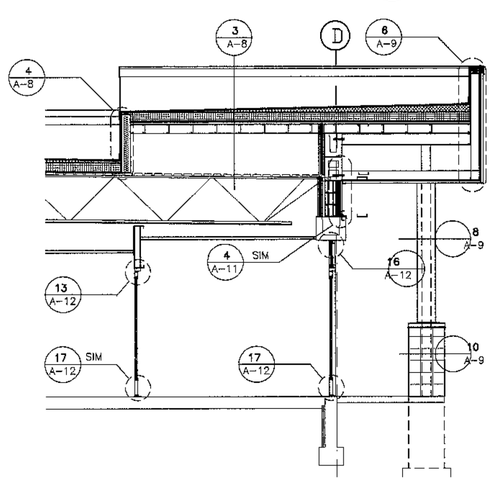

4 A-9 ENTRY CANOPY SECTION

SCALE: 1/4" = 1'-0"

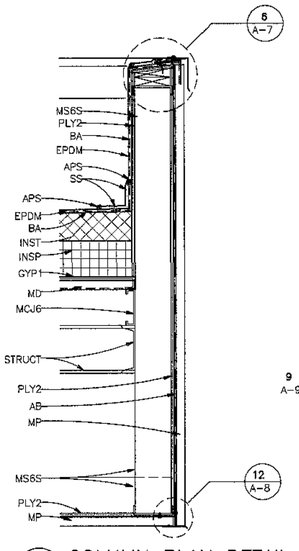

6 A-9 COLUMN PLAN DETAIL

SCALE: 1"=1'-0"

7 A-9 NOT USED

SCALE: 1 1/2"=1'-0"

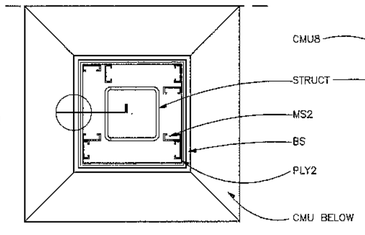

8 A-9 COLUMN PLAN DETAIL

SCALE: 1 1/2"=1'-0"

9 A-9 COLUMN PLAN DETAIL

SCALE: 1 1/2"=1'-0"

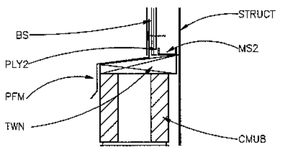

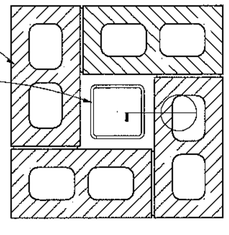

10 A-9 COLUMN PLAN DETAIL

SCALE: 1 1/2"=1'-0"

4 A-9 BUILDING SECTION

SCALE: 1/8" = 1'-0"

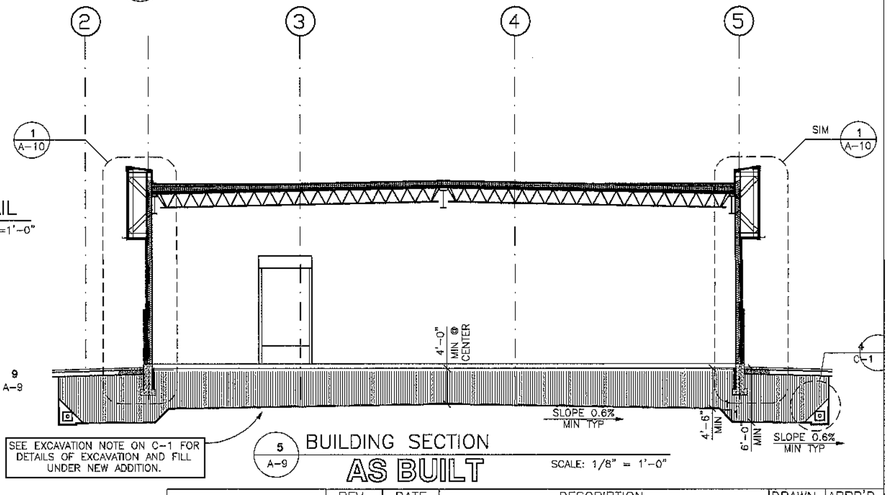

5 A-9 BUILDING SECTION AS BUILT

SCALE: 1/8" = 1'-0"

REV.	DATE	DESCRIPTION	DRAWN	APPR'D

DRAWN BY

DESIGNED BY

REVIEWED BY

TRANSPORTATION FACILITY, BUILDING 882

BUILDING & WALL SECTIONS

SCALE 1/8"=1'-0" | DATE 17NOV97 | PLATE A-9 | PAGE 11 OF 44

PROJECT NUMBER NZAS 93-0107

ACAD DRAWING NUMBER C:\ARCH\DWGS\ 93107A09

RECORD FILE NUMBER

SPACE COMMAND

MALMSTROM AIR FORCE BASE, MONTANA

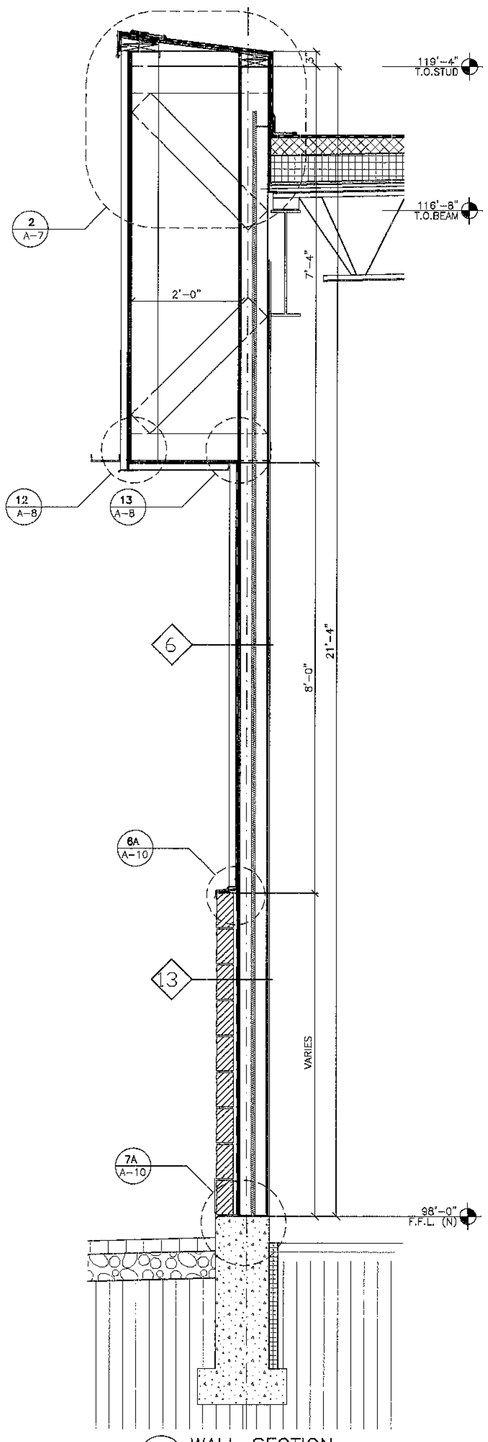

1 WALL SECTION
A-10
SCALE: 3/4" = 1'-0"

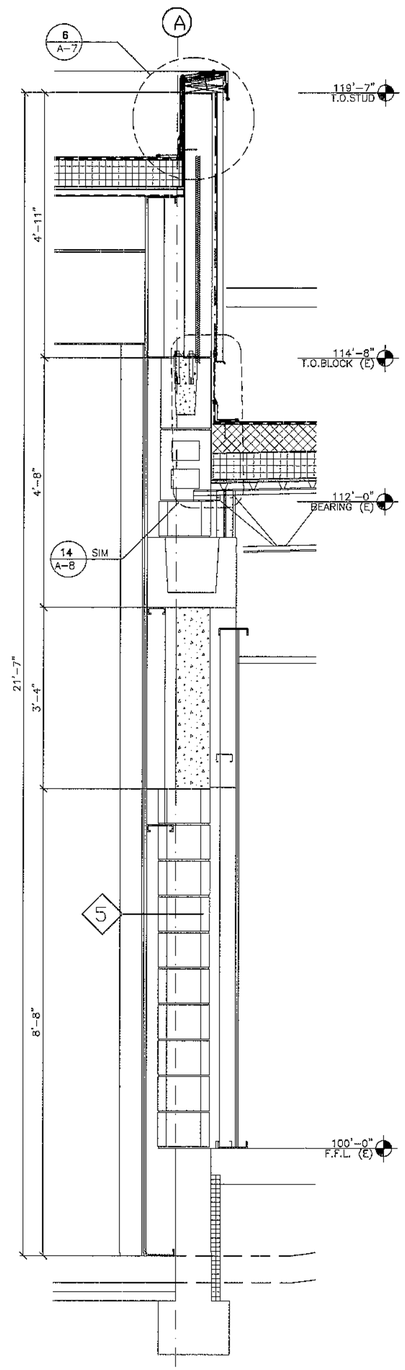

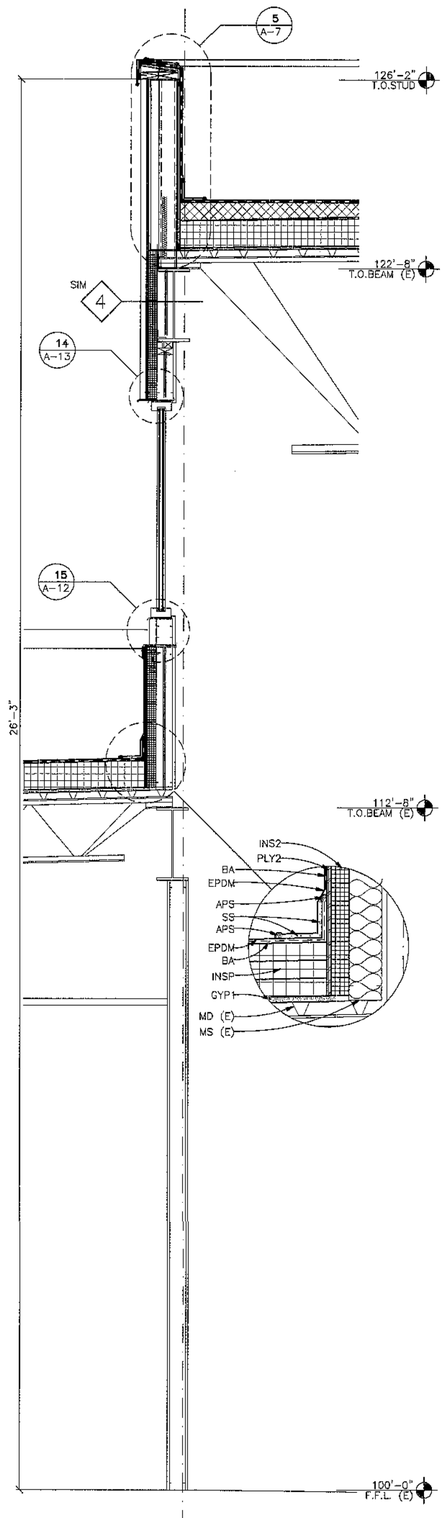

2 WALL SECTION
A-10
SCALE: 3/4" = 1'-0"

3 WALL SECTION
A-10
SCALE: 3/4" = 1'-0"

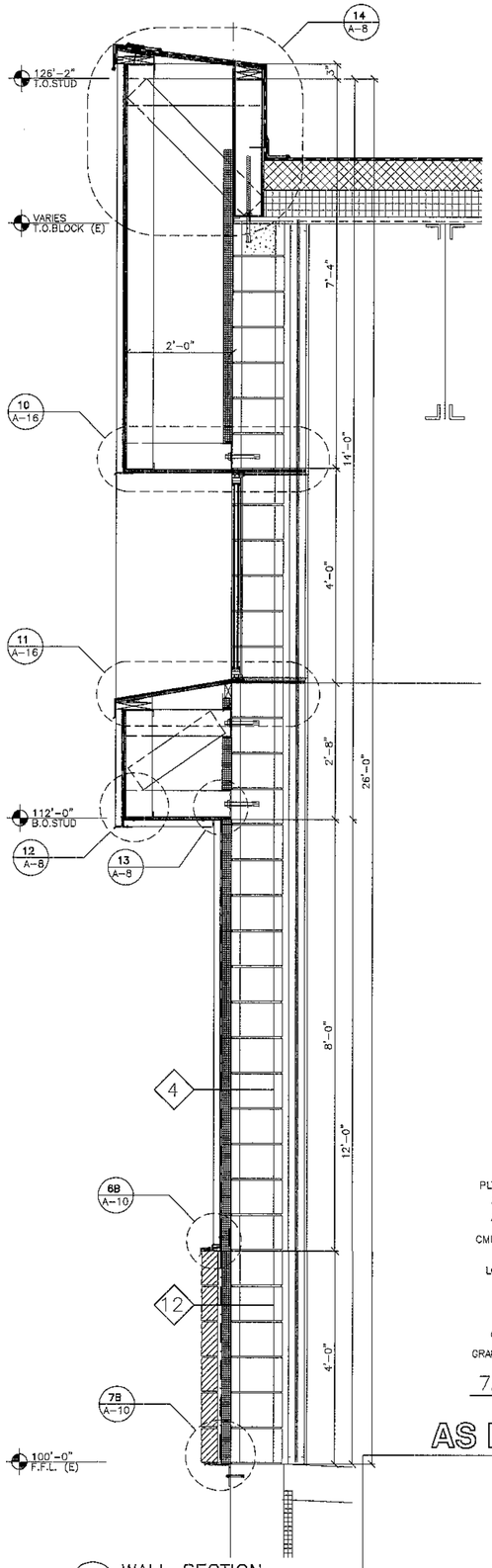

4 WALL SECTION
A-10
SCALE: 3/4" = 1'-0"

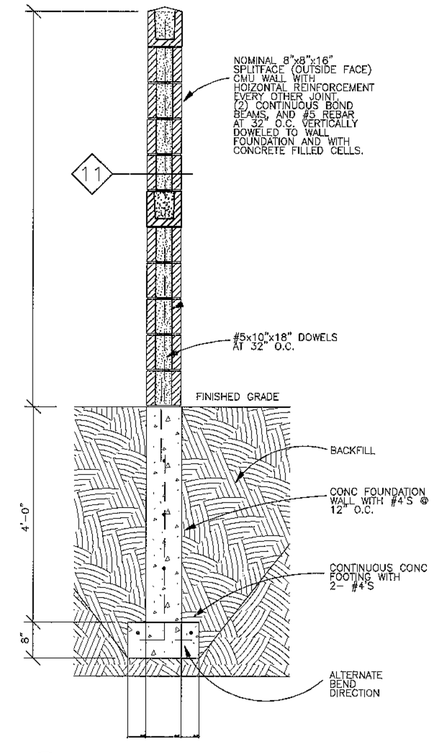

5 A-10 SCREEN WALL SECTION
SCALE: 3/4" = 1'-0"

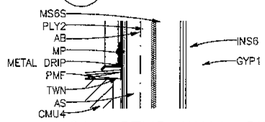

6A STUD WALL SILL DETAIL

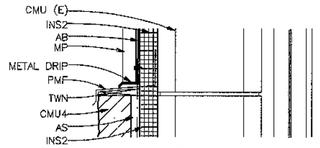

6B MASONRY WALL SILL DETAIL

6 A-10 TYPICAL SILL DETAILS
SCALE: 1 1/2" = 1'-0"

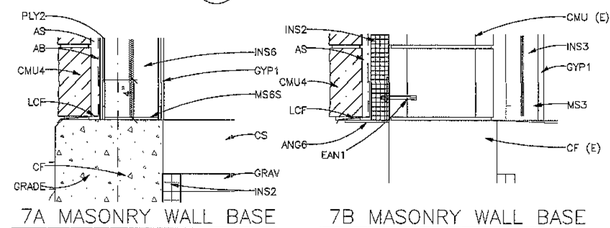

7A MASONRY WALL BASE

7B MASONRY WALL BASE

7 A-10 TYPICAL BASE DETAIL
SCALE: 1 1/2" = 1'-0"

AS BUILT

REV.	DATE	DESCRIPTION	DRAWN	APPR'D

DRAWN BY FITZPATRICK	TRANSPORTATION FACILITY, BUILDING 882	PROJECT NUMBER NZAS 93-0107
DESIGNED BY FITZPATRICK	WALL SECTIONS & DETAILS	ACAD DRAWING NUMBER D:\MALMSTROM\93107\ 93107A10
REVIEWED BY RADKE	SCALE 3/4"=1'-0" DATE 17NOV97 PLATE A-10 PAGE 12 OF 44	RECORD FILE NUMBER

SPACE COMMAND
MALMSTROM AIR FORCE BASE, MONTANA

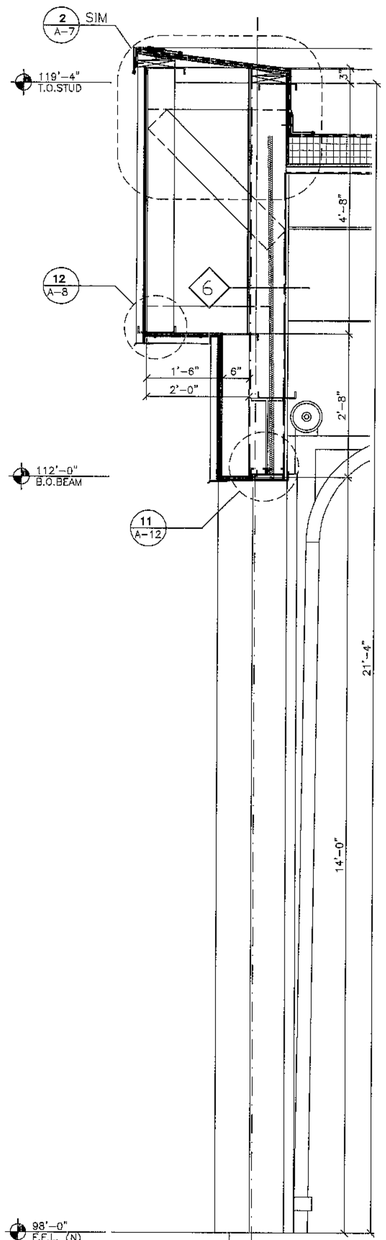

1 A-11 WALL SECTION
SCALE: 3/4" = 1'-0"

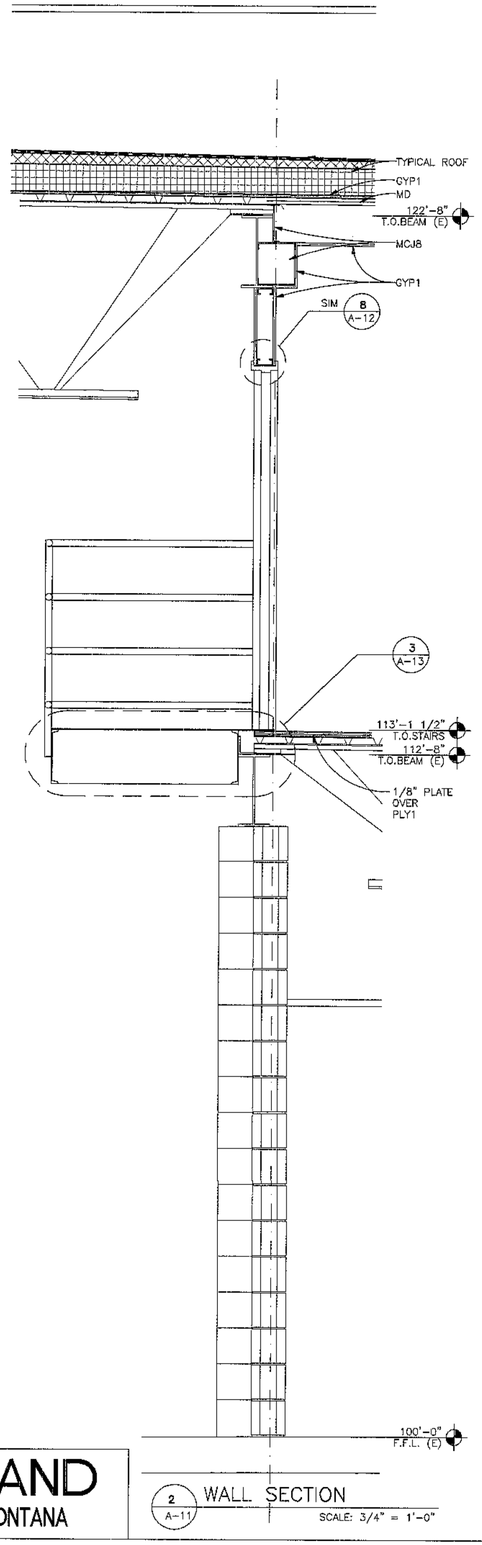

2 A-11 WALL SECTION
SCALE: 3/4" = 1'-0"

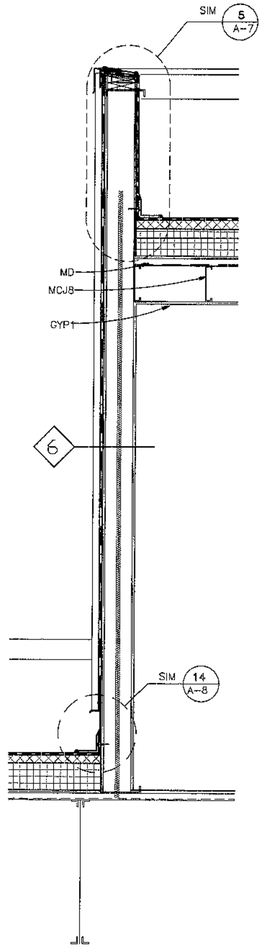

3 A-11 WALL SECTION
SCALE: 3/4" = 1'-0"

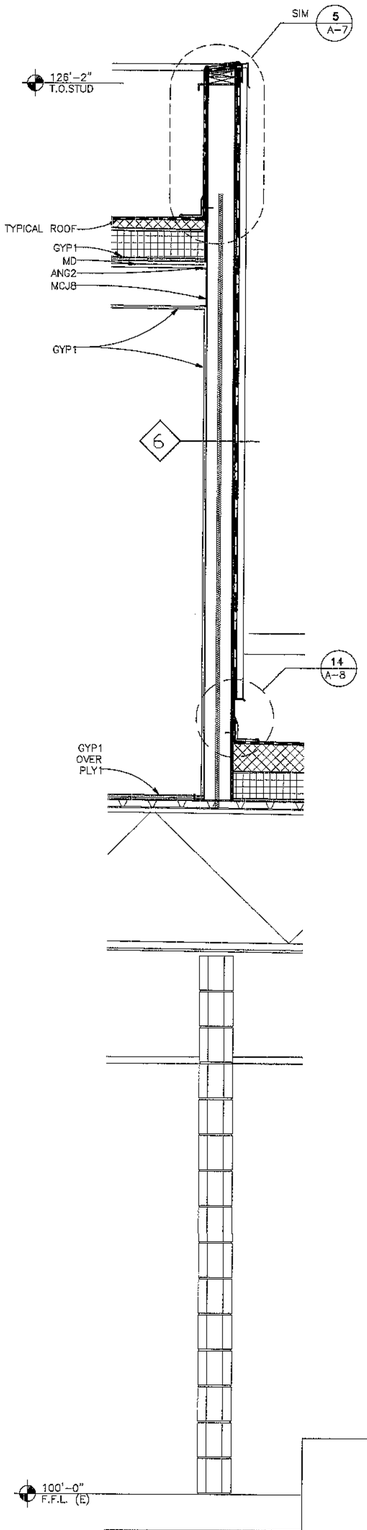

3 A-11 WALL SECTION
SCALE: 3/4" = 1'-0"

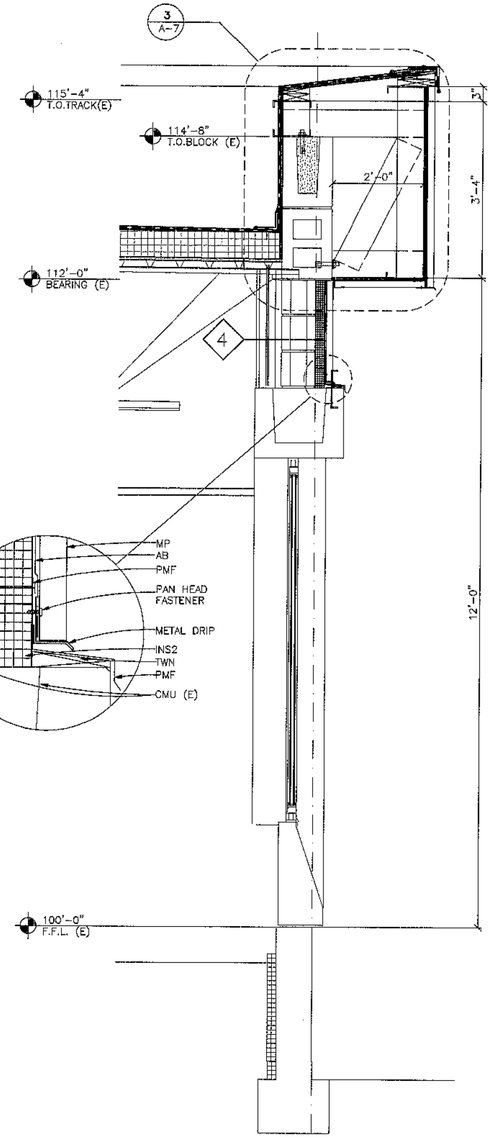

4 A-11 WALL SECTION
SCALE: 3/4" = 1'-0"

AS BUILT

REV.	DATE	DESCRIPTION	DRAWN	APPR'D

SPACE COMMAND
MALMSTROM AIR FORCE BASE, MONTANA

DRAWN BY FITZPATRICK	TRANSPORTATION FACILITY, BUILDING 882		PROJECT NUMBER NZAS 93-0107
DESIGNED BY FITZPATRICK	WALL SECTIONS & DETAILS		ACAD DRAWING NUMBER 93107A11
REVIEWED BY RADKE	SCALE AS SHOWN	DATE 17NOV97 PLATE A-11 PAGE 13 OF 44	RECORD FILE NUMBER

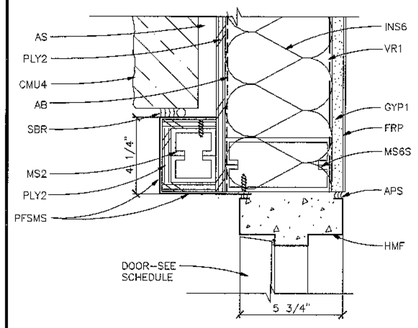

1 / A-12 EXT. DOOR JAMB
SCALE: 3"=1'0"

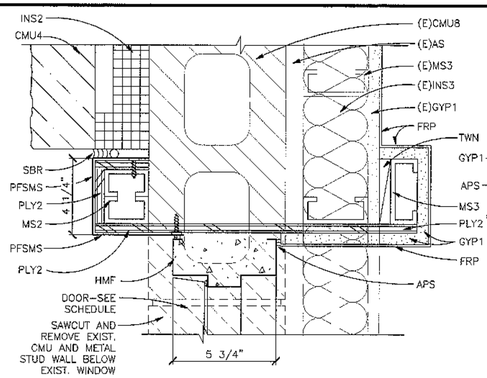

4 / A-12 JAMB @ EXIST. WINDOW
SCALE: 3"=1'0"

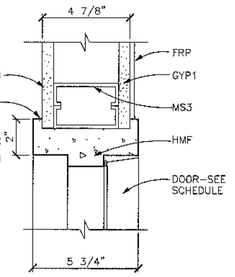

7 / A-12 DOOR JAMB
SCALE: 3"=1'0"

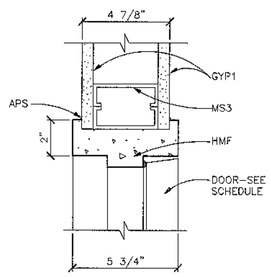

8 / A-12 DOOR JAMB
SCALE: 3"=1'0"

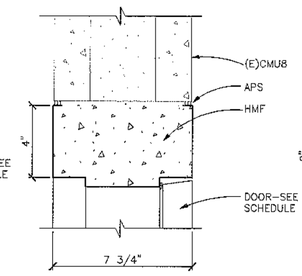

9 / A-12 HEAD @ CMU
SCALE: 3"=1'0"

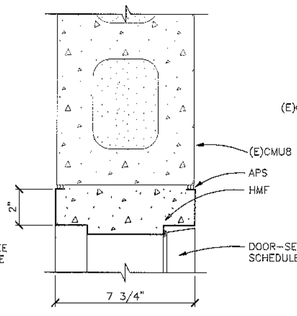

10 / A-12 JAMB @ CMU
SCALE: 3"=1'0"

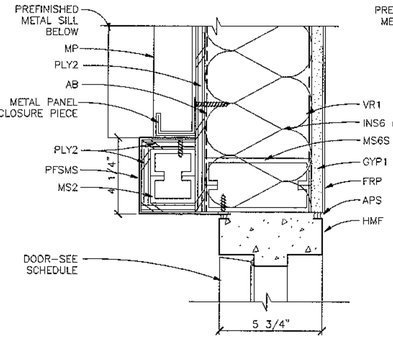

2 / A-12 EXT. DOOR JAMB
SCALE: 3"=1'0"

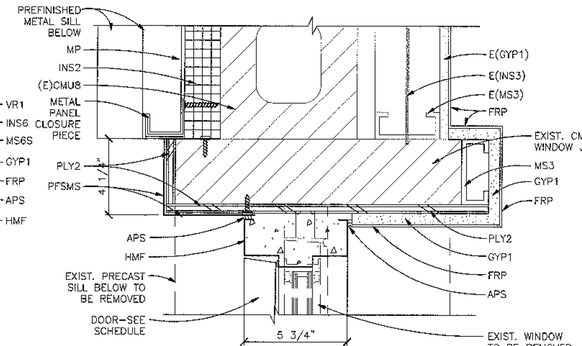

5 / A-12 JAMB @ EXIST. WINDOW
SCALE: 3"=1'0"

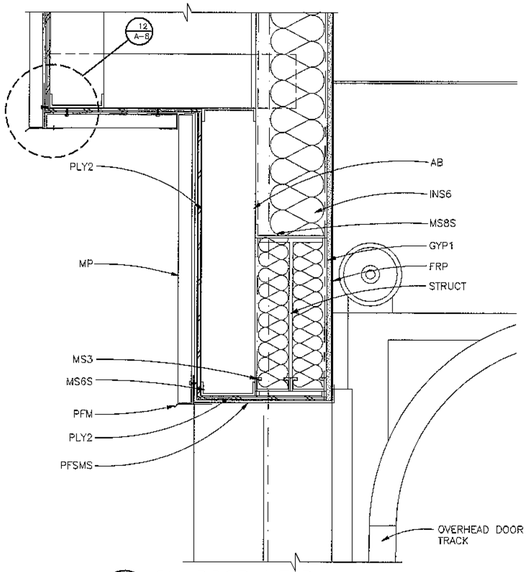

11 / A-12 OH DOOR HEAD
SCALE: 1 1/2"=1'-0"

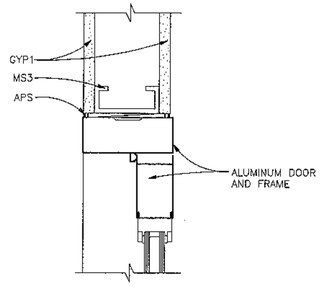

13 / A-12 ALUM. JAMB/HEAD SIM.
SCALE: 3"=1'0"

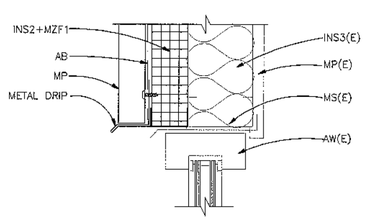

14 / A-12 WINDOW HEAD
SCALE: 3"=1'0"

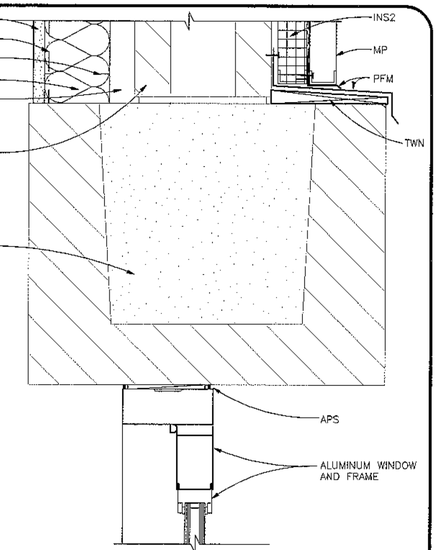

16 / A-12 DOOR HEAD
SCALE: 3"=1'0"

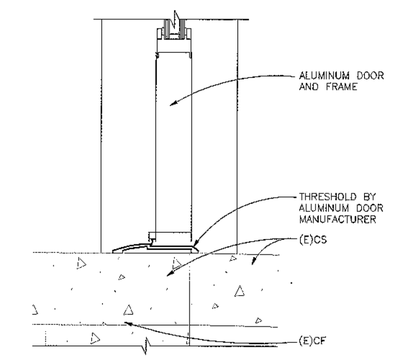

17 / A-12 DOOR SILL
SCALE: 3"=1'0"

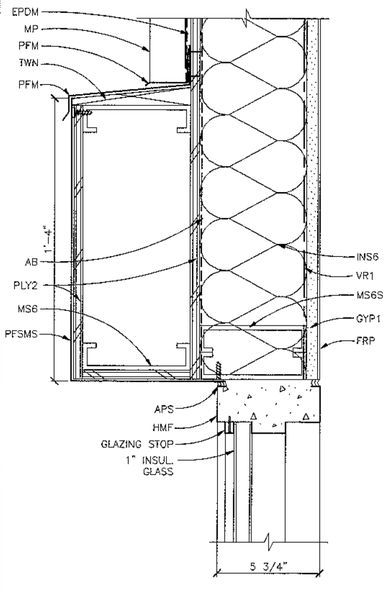

3 / A-12 EXT. DOOR HEAD
SCALE: 3"=1'0"

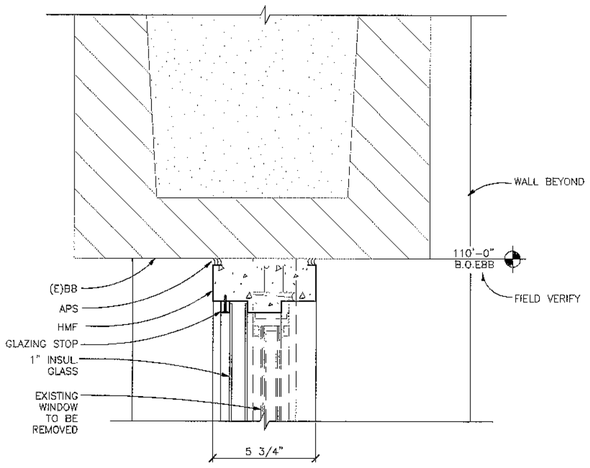

6 / A-12 HEAD @ EXIST. WINDOW
SCALE: 3"=1'0"

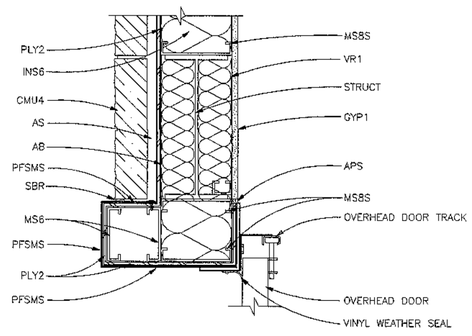

12 / A-12 OH DOOR JAMB
SCALE: 1 1/2"=1'-0"

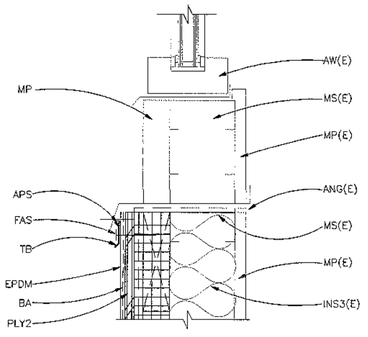

15 / A-12 WINDOW SILL
SCALE: 3"=1'0"

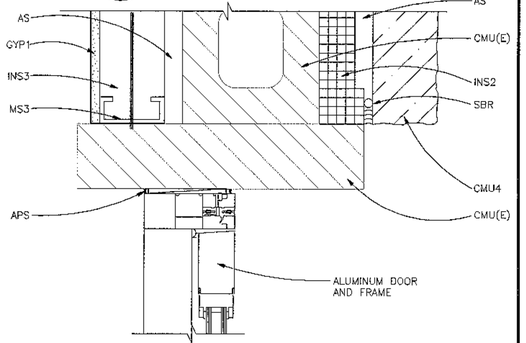

18 / A-12 DOOR JAMB
SCALE: 3"=1'0"

AS BUILT

REV.	DATE	DESCRIPTION	DRAWN	APPR'D

DRAWN BY FITZPATRICK
DESIGNED BY FITZPATRICK
REVIEWED BY RADKE

TRANSPORTATION FACILITY, BUILDING 882
DOOR & WINDOW DETAILS

PROJECT NUMBER NZAS 93-0107
ACAD DRAWING NUMBER 93107A12
RECORD FILE NUMBER

SCALE AS SHOWN | DATE 17NOV97 | PLATE A-12 | PAGE 14 OF 44

SPACE COMMAND
MALMSTROM AIR FORCE BASE, MONTANA

ENLARGED STAIR PLAN
1 / A-13
SCALE: 1/4" = 1'-0"

STAIR SECTION
2 / A-13
SCALE: 1/4" = 1'-0"

STAIR SECTION
3 / A-13
SCALE: 1 1/2" = 1'-0"

STAIR DETAIL
4 / A-13
SCALE: 1 1/2" = 1'-0"

STAIR SECTION
5 / A-13
SCALE: 1/4" = 1'-0"

SOLID CORE WD DOOR TYPES
6 / A-13
SCALE: 1/4" = 1'-0"

HOLLOW METAL DOOR TYPES
7 / A-13
SCALE: 1/4"= 1'-0"

ALUMINUM DOOR TYPES
8 / A-13
SCALE: 1/4" = 1'-0"

HOLLOW METAL DOOR FRAMES
9 / A-13
SCALE: 1/4" = 1-0"

STEEL OVERHEAD DOOR
8 / A-13
SCALE: 1/4" = 1'-0"

BUILDING 882 DOOR, FRAME, & HARDWARE SCHEDULE

DOOR NUMBER	ROOM NAME	HAND	DOOR SIZE W	DOOR SIZE H	DOOR SIZE T	DOOR MTL	DOOR TYPE	DOOR GLASS	DOOR FINISH	DOOR NOTES	FRAME MTL	FRAME TYPE	FRAME GLASS	DETAILS SHEET A-12 HEAD	DETAILS SHEET A-12 JAMB	DETAILS SHEET A-12 SILL	FRAME FINISH	FRAME NOTES	FIRE RATING	HARDWARE THRES	HINGE	LOCK	PUSH PULL	CLOSE	STOP HOLD	MISC	WTHR	NOTES
001-1	MECHANICAL ROOM	EXISTING →																										2
001-2	MECHANICAL ROOM	EXISTING →																										2
002-1	MENS TOILET	RH	3'0"	7'0"	1 ¾"	HM	B	–	P	–	HM	A	–	9(SIM)	10(SIM)	–	P	–	60M	–	H1	L1	–	C2	–	–	W1	–
004-1	BENCH STOCK	LHR	3'0"	7'0"	1 ¾"	HM	B	–	P	–	HM	A	–	7	7(SIM)	–	P	–	–	–	H1	L3	–	–	S1	–	–	1
005-1	AUTO MAINTENANCE	EXISTING →																										2,3
005-2	AUTO MAINTENANCE	EXISTING →																										2
005-3	AUTO MAINTENANCE	RH	3'0"	7'0"	1 ¾"	HM	B	–	P	–	HM	A	–	9	10	–	P	–	60M	–	H1	L1	–	C2	–	–	W1,W2	–
005-4	AUTO MAINTENANCE	EXISTING →																										2
005-5	AUTO MAINTENANCE	EXISTING →																										2
005-6	AUTO MAINTENANCE	EXISTING →																										2
006-1	WOMENS LOCKER	LH	3'0"	7'0"	1 ¾"	HM	B	–	P	–	HM	A	–	9(SIM)	10(SIM)	–	P	–	60M	–	H1	L1	–	C2	S1	–	W1	1
007-1	LGTR OFFICER	LH	3'0"	7'0"	1 ¾"	SCW	A	–	S	–	HM	A	–	8	8(SIM)	–	P	–	–	–	H1	L3	–	–	S1	–	–	1
008-1	LGTR NCOIC	LH	3'0"	7'0"	1 ¾"	SCW	A1	TG	S	–	HM	A	–	8	8(SIM)	–	P	–	–	–	H1	L3	–	–	S2	–	–	–
009-1	MOBILITY STOR.	LHR	3'0"	7'0"	1 ¾"	SCW	A	–	S	–	HM	A	–	8	8(SIM)	–	P	–	–	–	H1	L3	–	–	S1	–	–	1
009-2	MOBILITY STOR.	EXISTING →																										
009-3	MOBILITY STOR.	EXISTING →																										
010-1	COMPUTER TRAINING	RH	3'0"	7'0"	1 ¾"	SCW	A1	TG	S	–	HM	A	–	8	8(SIM)	–	P	–	–	–	H1	L3	–	–	S1	–	–	1
011-1	QUAL., SAFETY TRAINING	LH	3'0"	7'0"	1 ¾"	SCW	A	–	S	–	HM	A	–	8	8(SIM)	–	P	–	–	–	H1	L3	–	–	S1	–	–	1
011-2	QUAL., SAFETY TRAINING	LH	3'0"	7'0"	1 ¾"	SCW	A1	TG	S	–	HM	A	–	8	8(SIM)	–	P	–	–	–	H1	L3	–	–	S1	–	–	1
012-1	CONFERENCE ROOM	LH	3'0"	7'0"	1 ¾"	SCW	A1	TG	S	–	HM	A	–	8	8(SIM)	–	P	–	–	–	H1	L3	–	–	S1	–	–	1
013-1	ADMINISTRATION	RH	3'0"	7'0"	1 ¾"	SCW	A1	TG	S	–	HM	A	–	8	8(SIM)	–	P	–	–	–	H1	L3	–	–	S2	–	–	–
13A-1	ADMINISTRATION CLOSET	RH	3'0"	7'0"	1 ¾"	SCW	A	–	S	–	HM	A	–	8	8(SIM)	–	P	–	–	–	H1	L1	–	–	S1	–	–	1
014-1	WOMENS TOILET	EXISTING →																										
015-1	CCF OFFICE	RH	3'0"	7'0"	1 ¾"	SCW	A	–	S	–	HM	A	–	8	8(SIM)	–	P	–	–	–	H1	L3	–	–	S1	–	–	1
016-1	CC OFFICE	LH	3'0"	7'0"	1 ¾"	SCW	A	–	S	–	HM	A	–	8	8(SIM)	–	P	–	–	–	H1	L3	–	–	S1	–	–	1
017-1	CCQ OFFICE	RH	3'0"	7'0"	1 ¾"	SCW	A	–	S	–	HM	A	–	8	8(SIM)	–	P	–	–	–	H1	L3	–	–	S1	–	–	1
018-1	MENS TOILET	EXISTING →																										
019-1	LGTO ADMIN.	LH	3'0"	7'0"	1 ¾"	SCW	A1	TG	S	–	HM	A	–	8	8(SIM)	–	P	–	–	–	H1	L3	–	–	S1	–	–	1
020-1	LGTO NCOIC	RH	3'0"	7'0"	1 ¾"	SCW	A	–	S	–	HM	A	–	8	8(SIM)	–	P	–	–	–	H1	L3	–	–	S1	–	–	1
021-1	BREAK ROOM	LH	3'0"	7'0"	1 ¾"	SCW	A1	TG	S	–	HM	A	–	8	8(SIM)	–	P	–	–	–	H1	L1	–	–	S1	–	–	1
022-1	LGTO OFFICER	RH	3'0"	7'0"	1 ¾"	SCW	A	–	S	–	HM	A	–	8	8(SIM)	–	P	–	–	–	H1	L3	–	–	S1	–	–	1
023-1	FLEET WAITING	RH	3'0"	7'0"	1 ¾"	SCW	A1	TG	S	–	HM	A	–	8	8(SIM)	–	P	–	–	–	H1	L3	–	–	S1	–	–	1
024-1	FLEET MANAGEMENT	RHR	3'0"	7'0"	1 ¾"	SCW	A	–	S	–	HM	A	–	8	8(SIM)	–	P	–	–	–	H1	L3	–	–	S1	–	–	1
025-1	PROJECTION ROOM	LH	3'0"	7'0"	1 ¾"	HM	B	–	P	–	HM	A	–	7	7(SIM)	–	P	–	–	–	H1	L3	–	–	S1	–	–	1
025-2	PROJECTION ROOM	RHR	3'0"	7'0"	1 ¾"	HM	B	–	P	–	HM	A	–	8	8(SIM)	–	P	–	–	–	H1	L3	–	–	S2	–	–	–
026-1	BOOK STORAGE	RH	3'0"	7'0"	1 ¾"	HM	B	–	P	–	HM	A	–	7	7(SIM)	–	P	–	–	–	H1	L3	–	–	S1	–	–	1
027-1	BATTERY ROOM	LH	3'0"	7'0"	1 ¾"	HM	B	–	P	–	HM	A	–	9	10	–	P	–	60M	–	H1	L3	–	C2	–	–	W1	–
027-2	BATTERY ROOM	EXISTING →																										2
028-1	CORRIDOR	RHR	3'0"	7'0"	1 ¾"	AL	E	¼"T	PRE	–	AL	E	–	13	13(SIM)	–	PRE	–	–	–	H1	L6	–	C2	S1	–	–	1
028-2	CORRIDOR	RHR	3'0"	7'0"	1 ¾"	AL	D	1"I	PRE	–	AL	D	–	16	18	17	PRE	–	–	T2	H2	L4,L5	–	C2	–	–	W2,W3	–
029-1	CORRIDOR	RHR	3'0"	7'0"	1 ¾"	AL	E	¼"T	PRE	–	AL	E	–	13	13(SIM)	–	PRE	–	–	–	H1	L6	–	C2	S1	–	–	1
029-2	CORRIDOR	RHR	3'0"	7'0"	1 ¾"	AL	D	1"I	PRE	–	AL	D	–	7/A-16	8/A-16	17(SIM)	–	–	–	T2	H2	L4,L5	–	C2	–	–	W2,W3	–
030-1	AUTO.MAINT.SHOP	OH	15'0"	14'0"	1 ¾"	STL	F	1"I	PRE	–	–	–	–	6	7	–	–	–	–	PROVIDED BY DOOR MANUFACTURER								
030-2	AUTO.MAINT.SHOP	OH	15'0"	14'0"	1 ¾"	STL	F	1"I	PRE	–	–	–	–	6	7	–	–	–	–	PROVIDED BY DOOR MANUFACTURER								
030-3	AUTO.MAINT.SHOP	OH	15'0"	14'0"	1 ¾"	STL	F	1"I	PRE	–	–	–	–	6	7	–	–	–	–	PROVIDED BY DOOR MANUFACTURER								
030-4	AUTO.MAINT.SHOP	LHR	3'0"	7'0"	1 ¾"	HM	B	–	P	–	HM	D	–	3	1,2	–	P	–	–	T1	H2	L3	–	C2	–	–	W2,W3	–
031-1	MAINT.BREAKROOM	RH	3'0"	7'0"	1 ¾"	HM	B	–	P	–	HM	A	–	7	7(SIM)	–	P	–	–	–	H1	L1	–	–	S2	–	–	–
032-1	TOOL STORAGE	RH	3'0"	7'0"	1 ¾"	HM	B	–	P	–	HM	A	–	7	7(SIM)	–	P	–	–	–	H1	L3	–	–	S1	–	–	1
033-1	METALS SHOP	LHR	3'8"	7'0"	1 ¾"	HM	G	–	P	–	HM	C	–	6	4,5	–	P	–	–	T1	H2	L3	–	C2	–	–	W2,W3	–
034-1	JANITOR	LH	3'0"	7'0"	1 ¾"	SCW	A	–	S	–	HM	A	–	8	8(SIM)	–	P	–	–	–	H1	L3	–	–	S2	–	–	–
035-1	MECHANICAL ROOM ABOVE	LH	3'0"	6'8"	1 ¾"	HM	B	–	P	–	HM	B	–	8	8(SIM)	–	P	–	60M	–	H1	–	–	C1	–	M2	W1,W4	–
035-2	MECHANICAL ROOM ABOVE	RH	3'0"	6'8"	1 ¾"	HM	B	–	P	–	HM	B	–	8	8(SIM)	–	P	–	60M	–	H1	L3	–	C1	–	M1	W1,W4	–

HARDWARE SCHEDULE LEGEND

THRESHOLD:
- T1 PEMKO 272A–(6" THRESHOLD)
- T2 DOOR MANUFACTURER'S STANDARD THRESHOLD

HINGE:
- H1 STANLEY FBB179–4 1/2 x 4 1/2–1 1/2 PR–US10
- H2 STANLEY FBB 179–NRP–4 1/2 x 4 1/2–1 1/2 PR –US10

LOCK:
- L1 SCHLAGE D10S–ATH–US10–(LEVER HANDLE CYLINDRICAL PASSAGE LOCK)
- L2 SCHLAGE D40S–ATH–US10–(LEVER HANDLE PRIVACY LOCK)
- L3 SCHLAGE D53PD–ATH–US10–(LEVER HANDLE ENTRANCE LOCK)
- L4 SCHLAGE 20–022–US10–(RIM CYLINDER LOCK)
- L5 VON DUPRIN 98L–US10–(RIM PANIC EXIT DEVICE)
- L6 VON DUPRIN 98L–BE–US10–(RIM PANIC EXIT DEVICE)

CLOSER:
- C1 NORTON 7500–DB–US10–(STANDARD CLOSER)
- C2 NORTON 7500BF–DB–US10(BARRIER FREE CLOSER)

STOP/HOLD:
- S1 NT QUALITY W302–US10–(WALL STOP W/SCREW)
- S2 GLYNN–JOHNSON 904S–US10–(SURFACE MOUNTED DOOR STOP)

MISC:
- M1 GLYNN–JOHNSON COR–2–US10–(DOOR COORDINATOR)
- M2 GLYNN–JOHNSON FB7–US10–(AUTOMATIC FLUSH BOLTS)

WEATHERSTRIPPING:
- W1 PEMKO S88–(SMOKE SEAL)
- W2 PEMKO 430CPKL–(AUTOMATIC DROP SILL)
- W3 PEMKO 303 DV (HEAD & JAMB WEATHERSTRIPPING)
- W4 PEMKO 303 DV PR–(303 DV SPLIT ASTRAGAL)

HARDWARE NOTES:
1. PROVIDE TREATED WOOD BLOCKING WITHIN THE WALL FOR INSTALLATION OF DOOR WALL STOP.
2. REPLACE ALL WEATHERSTRIPPING ON EXISTING DOORS INCLUDING BETWEEN PANELS ON OVERHEAD DOORS
3. LOWER PANEL ON OVERHEAD DOOR HAS TO BE REPLACED WITH A PANEL TO MATCH THE EXISTING DOOR

ALUMINUM WINDOWS
10 / A-13
SCALE: 1/4" = 1-0"

AS BUILT

REV.	DATE	DESCRIPTION	DRAWN	APPR'D

DRAWN BY FITZPATRICK	TRANSPORTATION FACILITY, BUILDING 882	PROJECT NUMBER NZAS 93-0107
DESIGNED BY FITZPATRICK	SECTION DETAILS & STAIR DETAILS	ACAD DRAWING NUMBER 93107A13
REVIEWED BY RADKE	SCALE AS SHOWN · DATE 17NOV97 · PLATE A-13 · PAGE 15 OF 44	RECORD FILE NUMBER

SPACE COMMAND
MALMSTROM AIR FORCE BASE, MONTANA

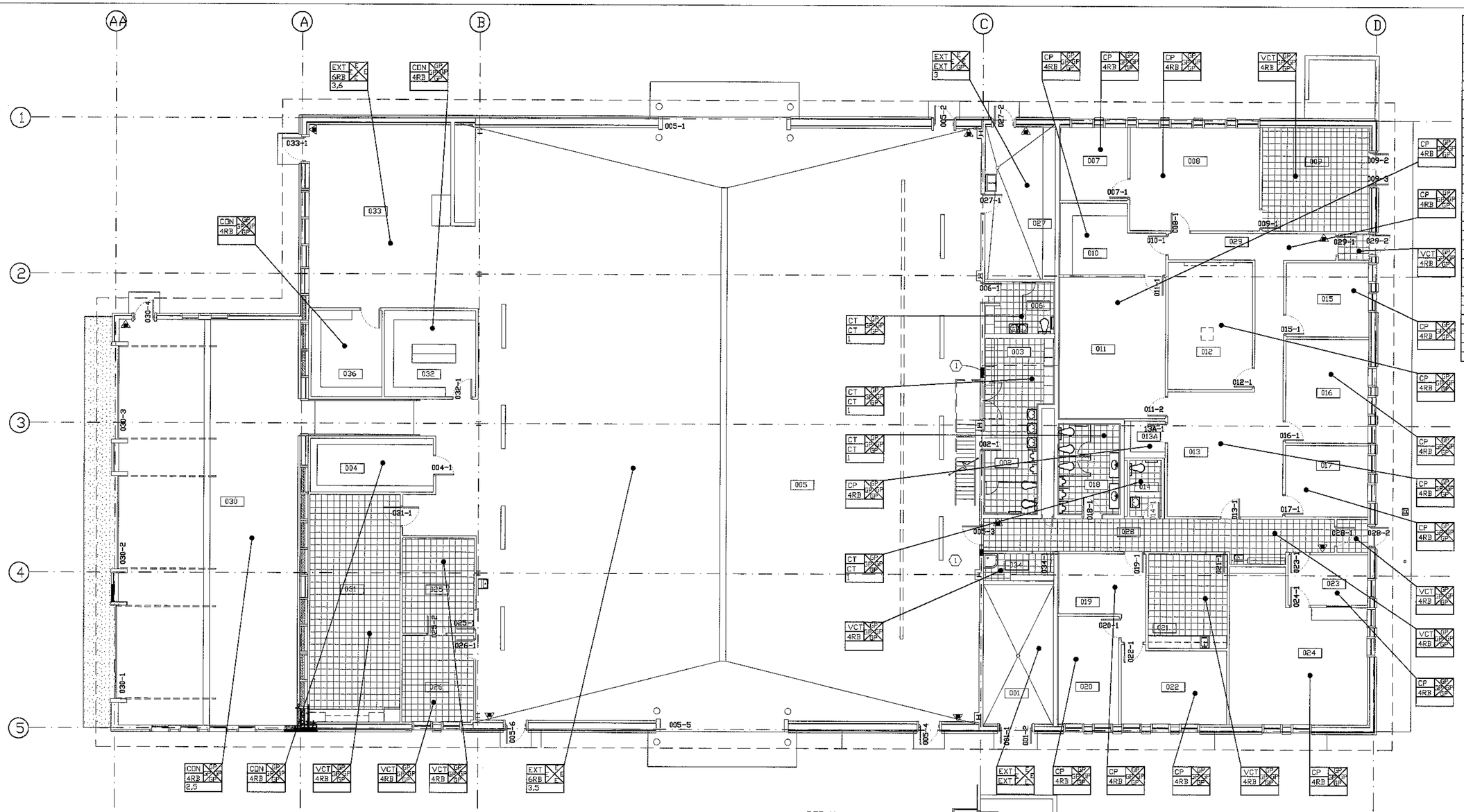

001	MECHANICAL ROOM
002	MENS TOILET
003	MENS LOCKER ROOM
004	BENCH STOCK
005	AUTO MAINTENACE ROOM
006	WOMENS LOCKER ROOM
007	LGTR OFFICER
008	LGTR NCOIC
009	MOBILITY STORAGE
010	COMPUTER TRAINING
011	QUALITY, SAFETY, & TRAINING
012	CONFERENCE ROOM
013	ADMINISTRATION
013A	ADMINISTRATION CLOSET
014	WOMENS TOILET
015	CCF OFFICE
016	CC OFFICE
017	CCQ OFFICE
018	MENS TOILET
019	LGTO ADMINISTRATION
020	LGTO NCOIC
021	BREAK ROOM
022	LGTO OFFICER
023	FLEET WAITING
024	FLEET MANAGEMENT
025	PROJECTION ROOM
026	BOOK STORAGE
027	BATTERY ROOM
028	CORRIDOR
029	CORRIDOR
030	AUTOMOTIVE MAINTENANCE SHOP
031	MAINTENANCE BREAK ROOM
032	TOOL STORAGE
033	METALS SHOP
034	JANITOR
035	MECHANICAL ROOM ABOVE

1 A-14 FINISH PLAN

SCALE: 1/8" = 1'-0"

REF N.

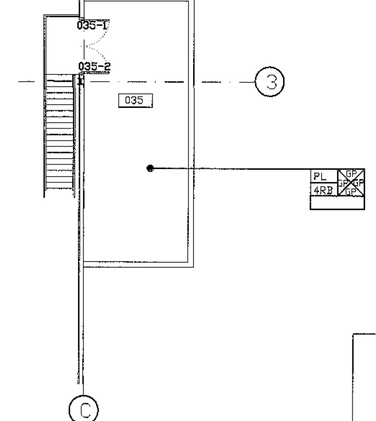

2 A-14 MECHANICAL ROOM ABOVE

SCALE: 1/8" = 1'-0"

ROOM FINISH LEGEND

FLOOR FINISH
BASE FINISH
ADDITIONAL NOTES
WALL FINISH

ROOM FINISH SCHEDULE

FLOOR:

CP1 CARPET
VC1 VINYL COMPOSITION TILE
VC2 VINYL COMPOSITION TILE
VC3 VINYL COMPOSITION TILE
CON EXISTING CONCRETE SLAB TO REMAIN
CT UNGLAZED CERAMIC MOSIC 1" X 1" TILE
PL 1/8" PLATE OVER PLYWOOD

BASE:

RB4 RUBBER BASE 4"
CT UNGLAZED CERAMIC MOSAIC TILE BASE
6RB RUBBER BASE 6"

WALLS:

GP PAINTED GYPSUM BOARD
E EXISTING WALL FINISH TO REMAIN
CT GLAZED CERAMIC WALL TILE
FRP FIBER REINFORCED PANEL

FINISH NOTES:

1. CERAMIC WAINSCOAT(SEE INTERIOR ELEVATION SHEET A-4)
2. HARDNER IN CONCRETE FLOOR
3. REPAINT ALL WALLS AND CEILINGS
4. USE EPOXY PAINT, THIS ROOM
5. FRP WAINSCOTT 4'-0" HIGH ON ALL WALLS
6. ROOM NEEDS NEW GYPSUM CIELING

GENERAL NOTES:

1. PLASTIC LAMINATES:
   PL1– NEVAMAR AL32T
   PL2– FORMICA 7015-58 GLACIER-SLATE

SPACE COMMAND

MALMSTROM AIR FORCE BASE, MONTANA

AS BUILT

REV.	DATE	DESCRIPTION	DRAWN	APPR'D

DRAWN BY FITZPATRICK	TRANSPORTATION FACILITY, BUILDING 882	PROJECT NUMBER NZAS 93-0107
DESIGNED BY FITZPATRICK	FINISH PLAN	ACAD DRAWING NUMBER 93107A14
REVIEWED BY SHEPARD	SCALE 1/8"=1'-0" DATE 17NOV97 PLATE A-14 PAGE 16 OF 44	RECORD FILE NUMBER

001	MECHANICAL ROOM
002	MENS TOILET
003	MENS LOCKER ROOM
004	BENCH STOCK
005	AUTO MAINTENACE ROOM
006	WOMENS LOCKER ROOM
007	LGTR OFFICER
008	LGTR NCOIC
009	MOBILITY STORAGE
010	COMPUTER TRAINING
011	QUALITY, SAFETY, & TRAINING
012	CONFERENCE ROOM
013	ADMINISTRATION
013A	ADMINISTRATION CLOSET
014	WOMENS TOILET
015	CCF OFFICE
016	CC OFFICE
017	CCQ OFFICE
018	MENS TOILET
019	LGTO ADMINISTRATION
020	LGTO NCOIC
021	BREAK ROOM
022	LGTO OFFICER
023	FLEET WAITING
024	FLEET MANAGEMENT
025	PROJECTION ROOM
026	BOOK STORAGE
027	BATTERY ROOM
028	CORRIDOR
029	CORRIDOR
030	AUTOMOTIVE MAINTENANCE SHOP
031	MAINTENANCE BREAK ROOM
032	TOOL STORAGE
033	METALS SHOP
034	JANITOR
035	MECHANICAL ROOM ABOVE

1 A-15 REFLECTED CEILING PLAN

SCALE: 1/8" = 1'-0"

2 A-15 MECHANICAL ROOM ABOVE

SCALE: 1/8" = 1'-0"

CEILING FINISHES/LEGEND

2X2 – SUSPENDED ACOUSTICAL LAY-IN CEILING PANEL

GYP – 5/8" TYPE "X" SUSPENDED GYPSUM CEILING–PAINTED

PLY – EXTERIOR PLYWOOD & METAL SOFFIT

EXP – EXPOSED STRUCTURE & DECK–PAINT
OTS – OPEN TO STRUCTURE
P – PAINT EXISTING CEILING
TTS – TIGHT TO STRUCTURE

REFLECTED CEILING LEGEND

CEILING MATERIAL
CEILING HEIGHT
ADDITIONAL NOTES

CEILING NOTES

1) CLEAN EXISTING STRUCTURE & DECK
2) ROOM NEEDS NEW GYPSUM CEILING

AS BUILT

REV.	DATE	DESCRIPTION	DRAWN	APPR'D

SPACE COMMAND

MALMSTROM AIR FORCE BASE, MONTANA

DRAWN BY FITZPATRICK	TRANSPORTATION FACILITY, BUILDING 882		PROJECT NUMBER NZAS 93-0107
DESIGNED BY FITZPATRICK	REFLECTED CEILING PLAN		ACAD DRAWING NUMBER 93107A15
REVIEWED BY SHEPARD	SCALE 1/8"=1'-0"	DATE 17NOV97	PLATE A-15 PAGE 17 OF 44	RECORD FILE NUMBER

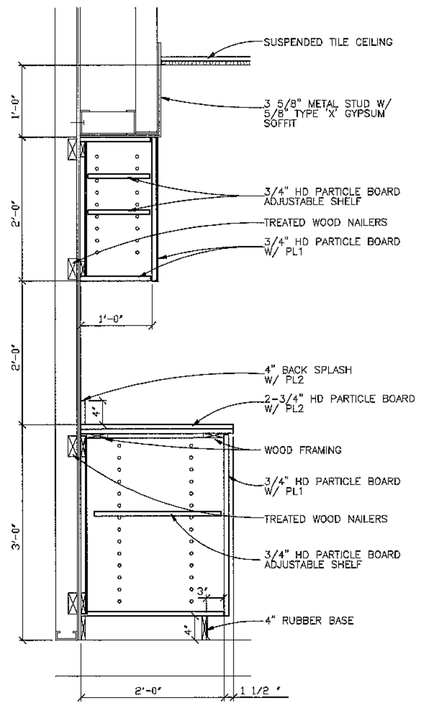

ALL INTERIOR SURFACES ARE TO BE COVERED WITH MELAMINE

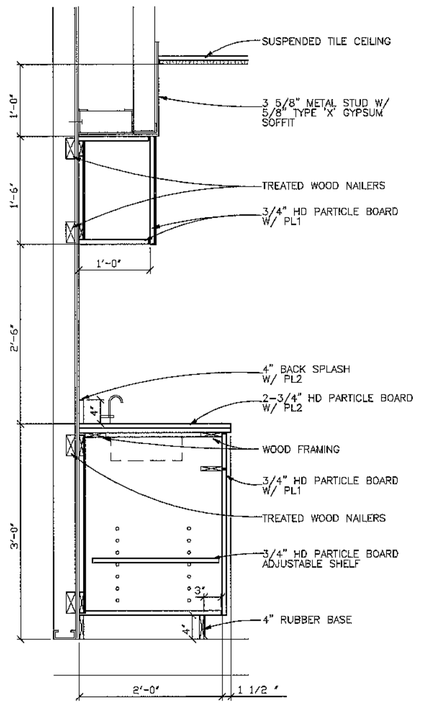

ALL INTERIOR SURFACES ARE TO BE COVERED WITH MELAMINE

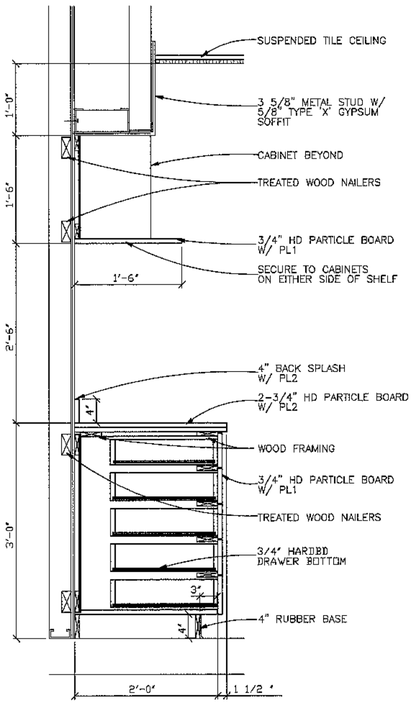

ALL INTERIOR SURFACES ARE TO BE COVERED WITH MELAMINE

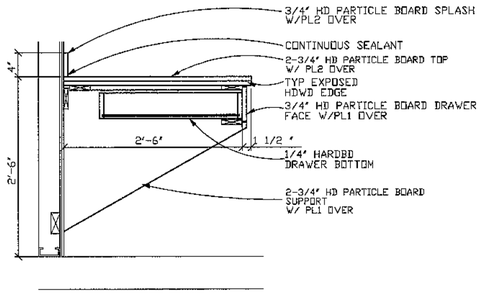

4 / A-16 COMPUTER DESK SECTION

SCALE: 1" = 1'-0"

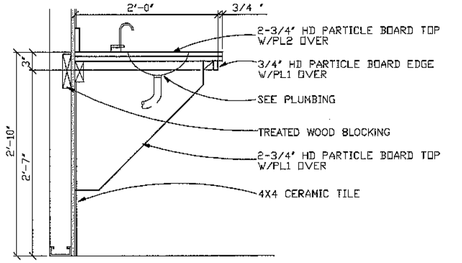

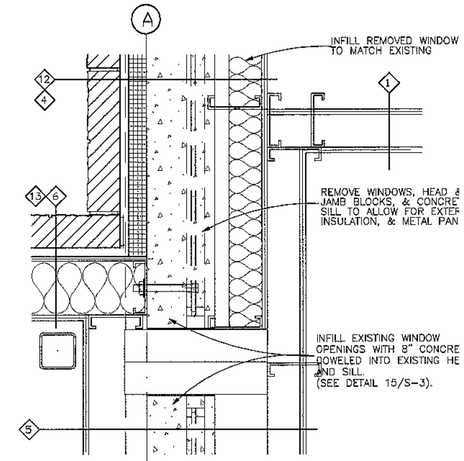

6 / A-16 PLAN DETAIL

SCALE: 1 1/2"=1'-0"

NOTE:
FURR OUT GYPSUM WALL ON THE ADDITION SIDETO COVER ALL EXISTING WINDOW JAMB, HEAD, AND SILL BLOCKS.

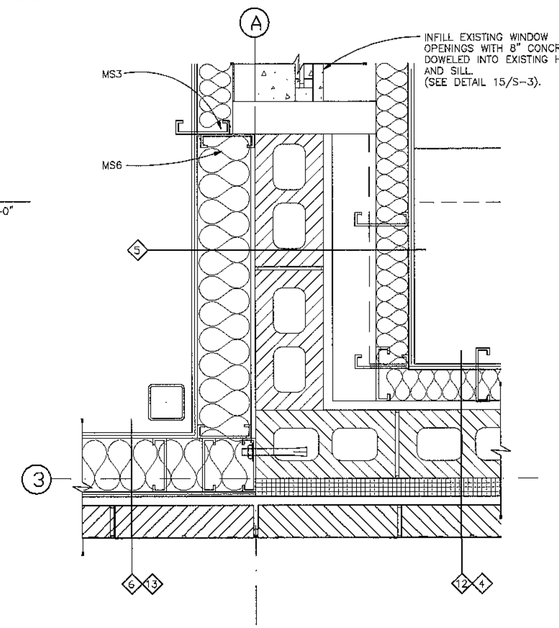

12 / A-16 PLAN DETAIL

SCALE: 1 1/2"=1'-0"

1 / A-16 BASE / UPPER CABINET SECTION

SCALE: 1" = 1'-0"

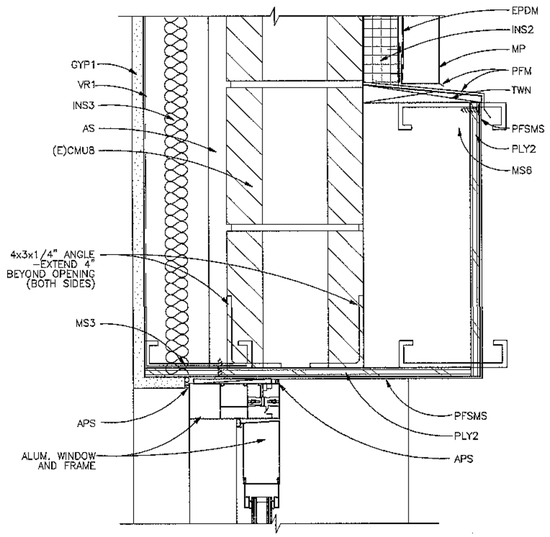

7 / A-16 HEAD @ NEW ENTRY

SCALE: 1 1/2"=1'-0"

2 / A-16 SINK BASE / UPPER CABINET SECTION

SCALE: 1" = 1'-0"

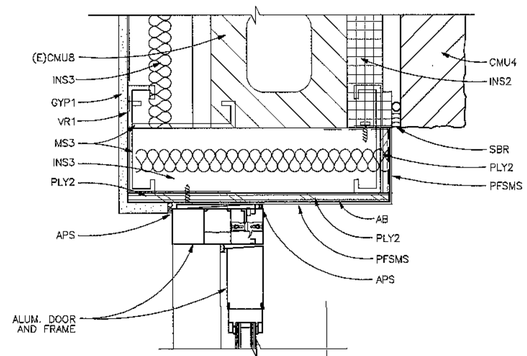

8 / A-16 JAMB @ NEW ENTRY

SCALE: 1 1/2"=1'-0"

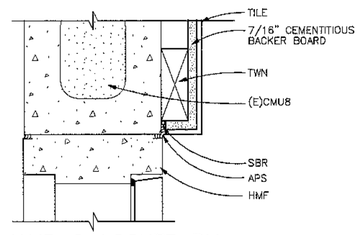

9 / A-16 JAMB @ LOCKER RM

SCALE: 1 1/2"=1'-0"

3 / A-16 BASE / MICROWAVE SHELF SECTION

SCALE: 1" = 1'-0"

5 / A-16 VANITY SECTION

SCALE: 1" = 1'-0"

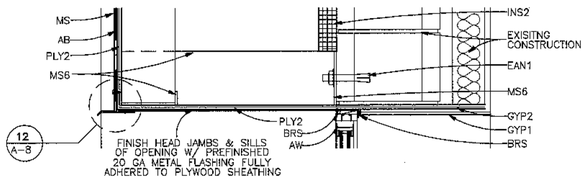

10 / A-16 ALUMINUM WINDOW HEAD

SCALE: 1 1/2"=1'-0"

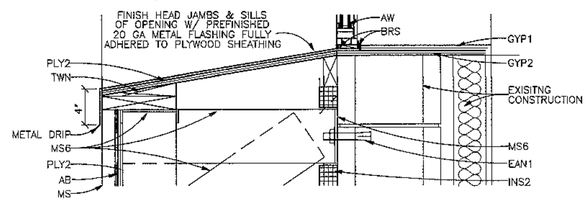

11 / A-16 ALUMINUM WINDOW SILL

SCALE: 1 1/2"=1'-0"

AS BUILT

REV.	DATE	DESCRIPTION	DRAWN	APPR

SPACE COMMAND
MALMSTROM AIR FORCE BASE, MONTANA

DRAWN BY FITZPATRICK	TRANSPORTATION FACILITY, BUILDING 882		PROJECT NUMBE NZAS 93-01
DESIGNED BY FITZPATRICK	CABINET SECTIONS & DETAILS		ACAD DRAWING NUM 9310/A16
REVIEWED BY RADKE	SCALE 1/8"=1'-0"	DATE 17NOV97	PLATE A-16 PAGE 18 OF 44	RECORD FILE NUM

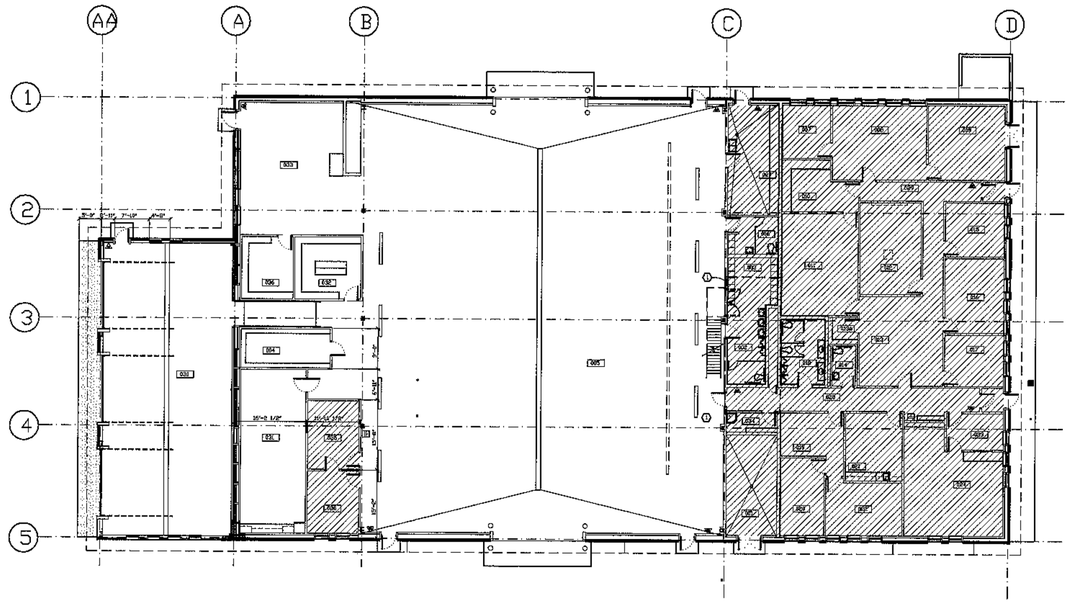

1 / A-17 ASBESTOS ABATEMENT FLOOR PLAN

SCALE: 1/16" = 1'-0"

LEGEND

- REMOVE & DISPOSE OF ACM FLOOR TILE MASTIC
- — — REMOVE & DISPOSE OF ACM TRANSITE WALL PANELS
- REMOVE & DISPOSE OF ACM ROOFING MATERIAL

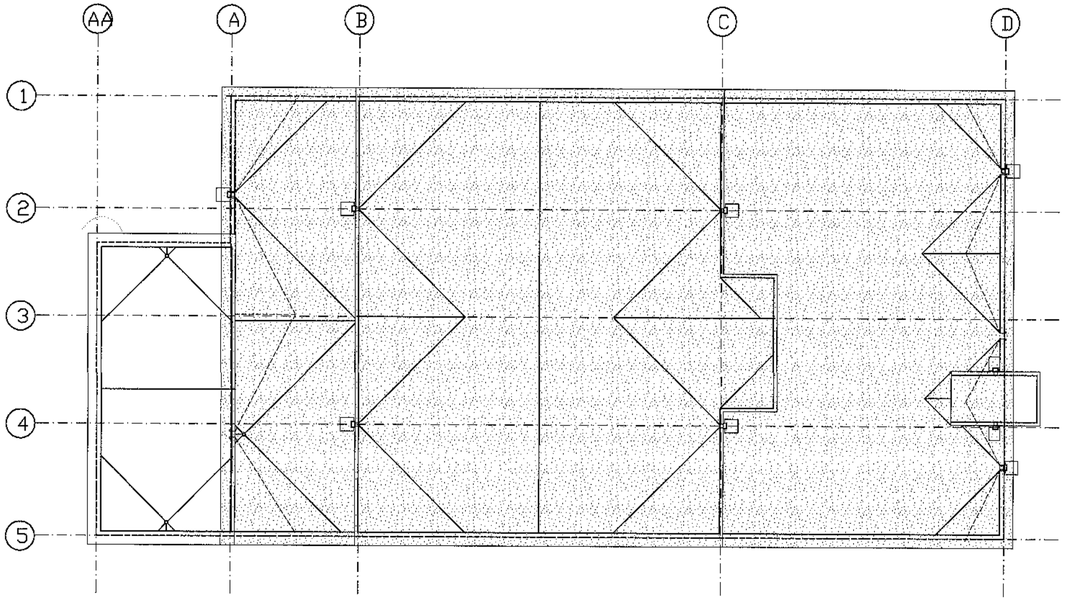

2 / A-17 ASBESTOS ABATEMENT ROOF PLAN

SCALE: 1/16" = 1'-0"

GENERAL NOTES:

1. All quantities are estimated based on rough field measurements. Contractor shall be responsible for verifying all quantities. Bids shall include all listed ACM in the schedule of quantities and shall be based on contractor's verified quantities of materials.
2. The contractor shall be responsible for the clean-up and decontamination of all surfaces in the designated areas.
3. The contractor shall provide, maintain a constant negative pressure differential pressure inside the floor tile mastic removal area at -0.02 inches of water column.
4. Contractor shall be responsible for avoiding contamination to areas not designated as asbestos abatement or clean-up/decontamination areas. If contamination should occur, contractor shall be responsible, at no cost to the owner, for the clean-up and decontamination of such areas.
5. Contractor shall be responsible for lock-out and protection of all electrical and mechanical systems, as needed.
6. Contractor shall, on a daily basis, remove all ACM debris, standing water, and ACM waste bags from inside the abatement areas, and store in previously approved waste containers
7. Contractor shall construct polyethylene sheeting containment as specified and be responsible for ensuring that all penetrations are sealed and/or critical barriers installed. Splash guards shall be installed in all areas the flooring and mastic is to be abated and shall be of 4 mil poly and extend 3 feet up the wall from the floor. The contractor shall not commence abatement until approval from the owner's on-site representative is acquired.
8. Locations of all areas for abatement are designated on the abatement drawings. Contractor shall ensure that the floor surfaces designated for abatement/cleaning are completed satisfactorily, including removal of mastic, such that no additional preparation work is required by the General Contractor prior to the installation of new floor tiles. Each surface shall be inspected and approved by the owner's on-site representative.
9. Odorless mastic remover that is completely compatible with the new flooring mastics shall be used.
10. The asbestos abatement shall be performed in accordance with the asbestos abatement specifications (Section 2085) and all applicable regulations.
11. The contractor shall notify contracting officer 48 hours in advance of final visual and air clearance monitoring.
12. The contractor shall coordinate all abatement work with contracting officer.
13. Contractor may remove windows to duct negative air machines to the outside. Windows shall be reinstalled after completion of the project.
14. During normal business hours contractor shall ensure that all workers while in occupied areas of the building or grounds, don street clothing only. At no time shall workers be allowed out of the abatement area while donning personal protective equipment.
15. Contractor shall coordinate building security issues with the owner.

AS BUILT

REV.	DATE	DESCRIPTION	DRAWN	APPR'D

DRAWN BY DLL	TRANSPORTATION FACILITY, BUILDING 882	PROJECT NUMBER NZAS 93-0107
DESIGNED BY RADKE	ASBESTOS ABATEMENT PLANS	ACAD DRAWING NUMBER 93107A17
REVIEWED BY SHEPARD	SCALE 1/16"=1'-0" DATE 17NOV97 PLATE A-17 PAGE 19 OF 44	RECORD FILE NUMBER

SPACE COMMAND

MALMSTROM AIR FORCE BASE, MONTANA

THE CONTRACTOR MUST VERIFY THE EXISTING SITE / BUILDING CONDITIONS AND NOTIFY THE CONTRACTING OFFICERS REPRESENTATIVE OF ANY DISCREPANCIES BEFORE PROCEEDING WITH THE WORK SHOWN.

EXISTING UNDERGROUND INSTALLATIONS & UTILITIES SHOWN ARE INDICATED ACCORDING TO THE BEST INFORMATION AVAILABLE AT THAT TIME. THIS DOES NOT GUARANTEE THE ACCURACY OF SUCH INFORMATION. SERVICE LINES (water, power, gas, cable TV, telephone and fiber optics) MAY NOT BE STRAIGHT LINES OR AS INDICATED ON THE PLANS. THE CONTRACTOR SHALL HAVE ALL UTILITIES LOCATED BEFORE EXCAVATION.

BUILDING 870

BUILDING 910

REMOVE AS MUCH ADDITIONAL ASPHALT & GRADE AROUND DESIGNATED EXCAVATION AREA AS NEEDED TO ACHIEVE POSITIVE DRAINAGE AWAY FROM ADDITION & TO TIE INTO EXISTING ASPHALT

EXCAVATION AREA SEE EXCAVATION NOTE

NEW DRAIN TILE SYSTEM AROUND ADDITION

DEMO & REMOVE EXISTING GENERATOR SHED, SLAB, & ANY OTHER RELATED MATERIALS PATCH & REPAIR ASPHALT TO MATCH SURROUNDING

ADDITIVE #3, REPLACE ALL CURB & GUTTER AROUND ISLAND

PROPOSED CONTOUR

CENTER LINE OF PROPOSED SWALE

APPROXIMATE FILL AREA OF EXISTING SWALE.

NOTES: (ADDITIVE #2)

SWALE TO BE FILLED IN WITH EXCAVATED MATERIAL AND TOPPED WITH A MIN. OF 4" OF TOPSOIL. AREA TO BE RESODDED AS PER SPECIFICATION. REFER TO NOTE NO. 3 ON THIS SHEET FOR PROTECTION OF EXISTING TREES.

GODDARD AVENUE

78TH STREET NORTH

THIRD AVE. N.

NEW 4" SCHED. 40 PVC I.E.=3432.83

EXISTING OIL/WATER SEPARATOR

ADD CURB & GUTTER W/ ADDITIVE #1

EXISTING 4"

8000

TRAILER

GATE

10'-0" MIN TYP

10'-0"

14'-5"

SITE LEGEND

- PE — PRIMARY ELECTRICAL (UNDERGROUND)
- SE — SECONDARY ELECTRICAL (UNDERGROUND)
- UGE — UNDERGROUND ELECTRICAL (UNDERGROUND)
- T — TELEPHONE (UNDERGROUND)
- W — WATER
- SD — STORM DRAIN INLET & PIPE
- DT — DRAIN TILE
- G — GAS
- SIDEWALK
- CONCRETE
- CHAINLINK FENCE
- 3438 — EXISTING CONTOURS
- PARKING LOT LIGHT
- CONCRETE POST
- TRANSFORMER
- GATE VALVE
- WATER TAPS

SITE NOTES

1. EXISTING DRAIN TILE AND STORM DRAIN AROUND BUILDING 882 MUST BE KEPT IN TACT AND CONTINUED AROUND NEW ADDITION.
2. EXISITNG BUILT UP ROOF CONTAINS ASBESTOS AS NOTED IN ASBESTOS REPORT IN SPECIFICATIONS. SPECIAL ABATEMENT PROCEDURES WILL HAVE TO BE TAKEN WHEN REMOVING EXISTING ROOF.
3. SAVE AND PROTECT EXISTING EVERGREENS IN LANDSCAPED ISLAND PARALLELING GODDARD AVE. TREES SHALL HAVE 4' DIAMETER TREE RINGS INSTALLED AS DETAILED.
4. BEFORE ANY EXCAVATION IS TO TAKE PLACE, CONTRACTOR MUST VERIFY LOCATIONS OF ALL UTILITIES WITHIN THE AREA OF EXCAVATION
5. RESTRIPE ALL EXISTING STRIPING IN CONTRACT AREA.

EXCAVATION NOTE:

THE AREA OF THE STRUCTURE PLUS 10' BEYOND SHALL BE EXCAVATED TO A DEPTH OF 4.0' BELOW THE LEVEL OF THE BASE OF THE FLOOR SLAB. THE 4.0' DEPTH SHALL BE NEAR THE CENTER OF THE STRUCTURE, SLOPING TO 4.5' AT THE EDGES. WHERE A 6" MINIMUM DEPTH EXCAVATION, CENTERED ON THE FOOTINGS SHALL BE MADE. THE EXCAVATION BENEATH THE FOOTINGS SHALL ALSO SLOPE TO THE OUTSIDE TO WHERE A SHALLOW DITCH WILL BE PREPARED FOR A SUBDRAIN SYSTEM.

SOURCE: FOUNDATION REPORT FOR MAFB AUTOMOTIVE MAINTENANCE SHOP 1 FEBRUARY 1973

6 C-1 PIPE BOLLARD

NTS

PAINT PIPE BOLLARDS ALTERNATING: DARK BROWN (FED. #37056) & YELLOW (FED. #23576)

6" DIA. STEEL PIPE-FILL W/CONCRETE

SLOPE TOP OF FOOTING

6" CONCRETE

4" GRAVEL

ENCASE IN CONCRETE

3'-6"

6"

8"

12" 6" 12"

5 C-1 ASPHALT DETAIL

1/2 "=1'-0"

SAWCUT EXISTING PAVEMENT

REMOVE EXISTING ASPHALT AS REQUIRED FOR COMPLIANCE WITH O.S.H.A.

1'-0" TYP

EXISTING PAVING

EXISTING BASE COURSE

TRENCH EXCAVATION BACKSLOPE &/OR VERTICAL TRENCH WALL SHORING & BRACING SHALL CONFORM TO O.S.H.A. REGULATIONS

NEW DRAIN TILE MUST BE KEPT AT OR JUST ABOVE THE EXISTING DRAIN ELEVATION TO GET POSITIVE DRAINAGE SEE DETAIL 4/C-1

ENGINEERED FILL

NEW 3" ASPHALT PAVEMENT

NEW 6"X5'-0" CONCRETE APRON

NEW 8" BASE COURSE

6'-0"

10'-0"

1 C-1 SITE PLAN

SCALE: 1"=30'-0"

REF N.

2 C-1 SPOT ELEVATIONS (ADDITIVE #2)

SCALE: 1"=10'-0"

3437.45 3437.41 3437.27 3437.21

3437.39 3437.31 3437.43 3437.65

ADD ASPHALT TOPPING AS NECESSARY IN THIS GENERAL AREA TO ACHIEVE POSITIVE DRAINAGE AWAY FROM CURB AND INTO STREET TO AVOID ANY PONDING WHEN THE NEW CURB IS INSTALLED.

3437.42 3437.37 3437.40 3437.70

3437.42 3437.30 3437.40 3437.78

ADDITIVE #2, REPLACE ALL CURB & GUTTER AROUND ISLAND

3438.06 3437.91 3437.67 3437.35 3437.36

3438.62 3438.11 3438.12 3438.00 3438.00 3437.95

HEENAH FOUNDRY CURB OPENING R-3266

6" DRAIN PIPE

3437.25

3438.36 3437.55 3435.91 3438.12

3437.32

3438.59 3437.75 3436.08 3438.25

3 C-1 TREE RING DETAIL

NOT TO SCALE

EXISTING EVERGREENS.

PULL MULCH AWAY FROM TRUNK MIN. 4"

FINISH GRADE

1/2"

1 1/2" WASHED AGGREGATE MULCH

3"

PERMALOC ALUMINUM EDGING, OR APPROVED EQUAL STAKE AND INSTALL ACCORDING TO MFGR'S SPECIFICATIONS.

WEED BARRIER FABRIC TYPAR 3201, OR APPROVED EQUAL, LAP 3" AT JOINTS

8" STAPLES TO ANCHOR WEED BARRIER, TRIANGULAR SPACING 3'-0" OC & 1'-0" OC LINEAR SPACING AT JOINTS.

2'-0"

9 1/2"

2"

3" RADIUS CURB DROP

4" RADIUS

1'-0"

6"

2'-0"

SEE PAVING SECTION 2/C2.1

CONTRACTION JOINTS CUT AT 10'-0" INTERVALS
EXPANSION JOINTS AT 50'-0" INTERVALS
ROUND ALL SIDES AND JOINT EDGES W/ EDGING TOOL
THE TRANSITION LENGTH BETWEEN A NORMAL CURB SECTION AND A DROP CURB SECTION SHALL BE 3'-0"

7 C-1 TYPICAL CURB & GUTTER DETAIL

NTS

ENGINEERED FILL

STOP PLASTIC SHEETING HERE

GRAD. #1

GRAD. #2

4" DRAIN TILE

PLASTIC SHEETING

6'-4" BELOW FLOOR SLAB

VARIES

6" 1'-0" 6"

6" 4" MIN 4" MIN 6"

2'-0" MIN

4 C-1 DRAIN TILE DETAIL

SCALE: 1 1/2"=1'-0"

AS BUILT

REV.	DATE	DESCRIPTION	DRAWN	APPR'D

DRAWN BY FITZPATRICK
DESIGNED BY FITZPATRICK
REVIEWED BY RADKE

TRANSPORTATION FACILITY, BUILDING 882

SITE PLAN

SCALE 1"=30' DATE 17NOV97 PLATE C-1 PAGE 2 OF 44

PROJECT NUMBER NZAS 93-0107
ACAD DRAWING NUMBER 93107C01
RECORD FILE NUMBER

SPACE COMMAND
MALMSTROM AIR FORCE BASE, MONTANA

LEGEND

SYMBOL	LIGHTING
	LAY-IN OR RECESSED FLUORESCENT FIXTURE, SIZE ON PLANS
	LAY-IN OR RECESSED FLUORESCENT FIXTURE WITH BATTERY BACKUP, SIZE ON PLANS
	SURFACE MOUNTED HID FIXTURE
HO	WALL MOUNTED HID FIXTURE
	WALL MOUNT FLUORESCENT FIXTURE–SIZE ON PLANS
	PENDANT OR SURFACE MOUNTED FLUORESCENT LIGHT FIXTURE, SIZE ON PLANS. SLASH INDICATES EMERGENCY BALLAST.
	WALL MOUNT EXIT LIGHT (W/ DIRECTIONAL ARROWS)
	2 HEADED EMERGENCY LIGHT

SYMBOL	DEVICES & POWER
$	SWITCH – SPST 3 THREE WAY MC MOMENTARY CONTACT
	RECEPTACLE – DUPLEX GFI GROUND FAULT INTERRUPT
	RECEPTACLE – DOUBLE DUPLEX SAME INDICATORS AS SHOWN FOR DUPLEX
	RECEPTACLE – DUPLEX – SPECIAL MOUNT CR CORD REEL
	PUSHBUTTON SWITCH SUPPLIED BY OTHERS, INSTALLED AND CONNECTED BY EC
	ELECTRIC MOTOR CONNECTION
	MANUAL MOTOR DISCONNECT/STARTER SWITCH
	PANELBOARD, SURFACE MOUNTED
T	THERMOSTAT BY MC, INSTALLED AND CONNECTED BY EC

SYMBOL	ABBREVIATIONS AND MISCELLANEOUS
EC	ELECTRICAL CONTRACTOR
MC	MECHANICAL CONTRACTOR
GC	GENERAL CONTRACTOR
C	CONDUIT
GND	GROUND
AFF	ABOVE FINISHED FLOOR
W/	WITH
UG	UNDERGROUND
WP	WEATHER PROOF
A-2,4,6	CIRCUIT DESIGNATION, PANELBOARD A, CIRCUITS 2, 4, 6.
1/E5.2	INDICATES DETAIL 1 ON SHEET E5.2
1	SHEET WORK NOTE.
	HOME RUN TO PANELS. NUMBER OF ARROWS INDICATES NUMBER OF CIRCUITS
	CONDUIT CONCEALED IN CEILING OR WALL
	CONDUIT CONCEALED UNDER FLOOR
	CIRCUIT. NUMBER OF HASH MARKS INDICATES NUMBER OF CONDUCTORS IN CABLE/RACEWAY. GROUND WIRE NOT SHOWN BUT SHALL BE INCLUDED. NO HASH MARKS INDICATES 2 CONDUCTORS PLUS GROUND.

SYMBOL	COMMUNICATIONS
	TELEPHONE/DATA JACK
W	TELEPHONE JACK, W INDICATES WALL MOUNT

SYMBOL	FIRE ALARM
F	FIRE ALARM STROBE
F	FIRE ALARM HORN AND STROBE
F	FIRE ALARM MANUAL PULL STATION
S	FIRE ALARM SMOKE DETECTOR
S	FIRE ALARM DUCT SMOKE DETECTOR
	FIRE ALARM CONTROL PANEL
FS	FLOW SWITCH
TS	TAMPER SWITCH

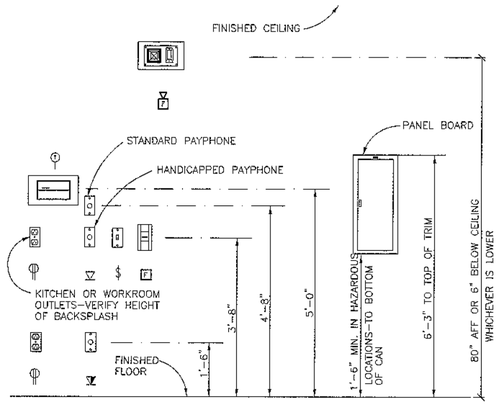

1 / E-1 BOX MOUNTING HEIGHTS

NOT TO SCALE

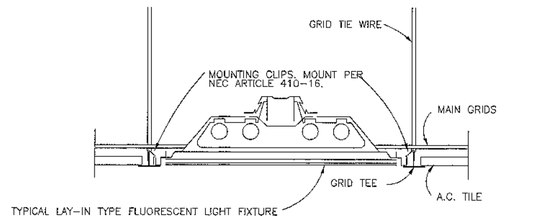

2 / E-1 LAY-IN FIXTURE MOUNTING DETAIL

NOT TO SCALE

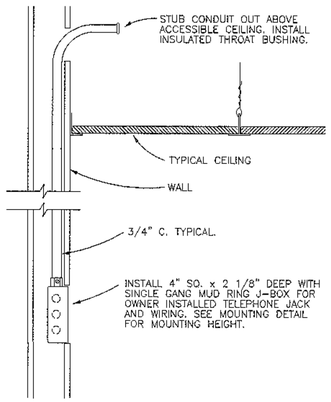

3 / E-2 TELEPHONE J-BOX MOUNTING DETAIL

NOT TO SCALE

SOUND STOPPING/FIRE STOPPING NOTES

1. ALL PENETRATIONS THROUGH WALLS, PARTITIONS AND RACEWAYS BE IT EXISTING AFTER DEMOLITION OR INSTALLED DURING CONSTRUCTION SHALL BE PROVIDED WITH AN EXPANDABLE FOAM FILLER FOR SOUND STOPPING.
2. ANY PENETRATIONS THROUGH WALLS THAT ARE FIRE RELATED WALLS, PARTITIONS AND RACEWAYS BE IT EXISTING AFTER DEMOLITION OR INSTALLED DURING CONSTRUCTION SHALL BE "FIRESTOPPED" WITH APPROPRIATE UL RATED FIRE STOPPING MATERIAL. SEE SHEET A-3 FOR RATED WALLS. SEE 4/A-3 FOR DETAIL.

CONTROL EQUIPMENT SCHEDULE

ITEMS BY OTHERS						ITEMS BY ELECTRICAL CONTRACTOR							DISCONNECT			
							STARTER									
ROOM NO.	UNIT	VOLTAGE	PHASE	KW	HP	MANUFACTURER NO.	NEMA SIZE	COIL VOLTAGE	HOA	ON OFF	PILOT	INTERLOCK	BY UNIT SUPPLIER	BY ELECTRICAL CONTRACTOR	AUXILIARY CONTROL EQUIPMENT FURNISHED BY OTHERS, AND/OR CONNECTED BY ELECTRICAL CONTRACTOR	REMARKS
ENTRY	HCH-1	120	1	0.06	–	–	–	–	–	–	–	–	X	–	–	E.C. TO WIRE THERMOSTAT
ENTRY	HCH-2	120	1	0.06	–	–	–	–	–	–	–	–	X	–	–	E.C. TO WIRE THERMOSTAT
–	–	–	–	–	–	–	–	–	–	–	–	–	–	–	–	–
018	EF-1	120	1	–	1/6	–	–	–	–	–	–	–	X	–	–	–
005	EF-2	208	1	–	1/12	–	–	–	–	–	–	–	–	X	–	–
030	EF-3	208	3	–	3	–	–	–	–	–	–	–	X	X	–	STARTER/DISCONNECT BY MC
005	EF-4	208	3	–	3	–	–	–	–	–	–	–	X	–	–	STARTER/DISCONNECT BY MC
005	EF-5	208	3	–	3	–	–	–	–	–	–	–	X	–	–	STARTER/DISCONNECT BY MC
033	EF-7 (E)	208	3	–	3/4	–	–	–	–	–	–	–	X	–	–	STARTER/DISCONNECT BY MC
–	–	–	–	–	–	–	–	–	–	–	–	–	–	–	–	–
PENT.	AHU-1	208	3	–	10	VFD	1	120	X	–	X	X	–	X	–	SAFTRONICS - FP5
–	–	–	–	–	–	–	–	–	–	–	–	–	–	–	–	–
ROOF	MAU-1	208	3	–	5	ECN2411BAE	1	120	X	–	X	–	–	X	–	EATON
ROOF	MAU-2	208	3	–	1	ECN2401BAC	0	120	X	–	X	–	–	X	–	EATON
ROOF	EAF-1	208	3	–	7.5	VFD	1	120	X	–	X	–	–	X	–	SAFTRONICS - FP5
–	–	–	–	–	–	–	–	–	–	–	–	–	–	X	–	–
OUTSIDE	CU-1	208	3	21.6	–	CR306E102	3	120	X	–	X	–	–	X	–	–
–	–	–	–	–	–	–	–	–	–	–	–	–	–	–	–	–
001	HWP-1	208	3	–	2	ECN2401BAD	0	120	X	–	X	–	–	X	–	EATON
001	HWP-2	208	3	–	2	ECN2401BAD	0	120	X	–	X	–	–	X	–	EATON
–	–	–	–	–	–	–	–	–	–	–	–	–	–	–	–	–
005	ILP-1	208	3	–	3/4	–	–	–	–	–	–	–	–	X	–	–
–	–	–	–	–	–	–	–	–	–	–	–	–	–	X	–	–
033	HUH-1	120	1	–	.05	–	–	–	–	–	–	–	–	X	–	–
–	–	–	–	–	–	–	–	–	–	–	–	–	–	–	–	–
030	RH-1	120	1	–	FRAC.	–	–	–	–	–	–	–	–	X	–	–
030	RH-2	120	1	–	FRAC.	–	–	–	–	–	–	–	–	X	–	–
030	RH-3	120	1	–	FRAC.	–	–	–	–	–	–	–	–	X	–	–

(E) INDICATES EXISTING UNIT TO BE RELOCATED.

LIGHTING FIXTURE SCHEDULE

FIXTURE			MOUNTING			LAMP		FIXTURE VOLTAGE	FIXTURE WATTAGE	REMARKS
TYPE	MANUFACTURER	CATALOG NUMBER	LOCATION	TYPE	HEIGHT	TYPE	NO.			
1A	METALUX	2GC 332 A125-120	CEILING	LAY-IN		F32T8/SP35	3	120	85	NOTE 1
2A	METALUX	3GC 232 A125-120	CEILING	LAY-IN		F32T8/SP35	2	120	61	NOTE 1
3A	METALUX	2P 3G X2UI-5/8S331-120	CEILING	LAY-IN		F32T8/SP35 UI 5/8	2	120	68	NOTE 1
4A	METALUX	2FC 232 A125-120	CEILING	LAY-IN		F32T8/SP35	2	120	61	NOTE 1
1B	METALUX	BLU 232-120	WALL	SURFACE		F32T8/SP35	2	120	63	
1C	METALUX	8T WB1 232 IMA-120	CEILING	SURFACE		F32T8/SP35	4	120	106	
2C	METALUX	WB1232 IMA-120	CEILING	SURFACE		F32T8/SP35	2	120	63	
3C	METALUX	DIM 232-120	CEILING	SUSPENDED		F32T8/SP35	2	120	106	
1D	HALO	C7226 1E 7210 L1	CEILING	RECESSED		F26DBX/SPX35/4P	2	120	60	PROVIDE WITH 0 DEGREE BALLAST
1F	LUMARK	HP WR 65T400MTLL	POLE	YOKE		LU400	1	120	470	MOUNT ON CROSS ARM
1H	SPERO	BH9-MH400-AAF-120	CEILING	SUSPENDED		400WMH	1	120	455	PROVIDE W/ HOOK AND CORD ASSEMBLY HP12
1W	LUMARK	MH GP 175 HMT LL-PE	WALL	SURFACE		175WMH	1	120	210	
1X	SURE-LITE	CAX-7170-00-R	WALL	SURFACE		LED			10	DIRECTIONAL ARROWS AS INDICATED ON DRAWINGS
2X	SURE-LITE	XR-12208	WALL	SURFACE		25WATT/12V	4	120	105	

NOTE 1: THOSE FIXTURES WHICH REQUIRE BATTERY-BACKUP BALLASTS ARE INDICATED ON LIGHTING SHEET.

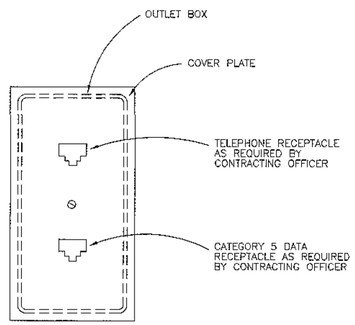

4 / E-1 TELEPHONE/DATA OUTLET

NOT TO SCALE

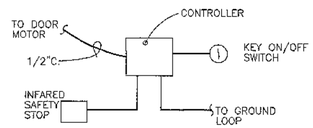

GREAT FALLS OVERHEAD DOOR
(406) 452-6132

5 / E-1 GROUND LOOP CONTROL DIAGRAM

NOT TO SCALE

AS BUILT

REV.	DATE	DESCRIPTION	DRAWN	APPR'D

DRAWN BY BRUNSVOLD
DESIGNED BY GLASSING
REVIEWED BY GLASSING

TRANSPORTATION FACILITY, BUILDING 882

LEGENDS, SCHEDULES AND DETAILS

SCALE 1/8"=1'-0" | DATE 17NOV97 | PLATE E-1 | PAGE 38 OF 44

PROJECT NUMBER NZAS 93-0107
ACAD DRAWING NUMBER S:\MAJOR\CAD\93107E01
RECORD FILE NUMBER

SPACE COMMAND
MALMSTROM AIR FORCE BASE, MONTANA

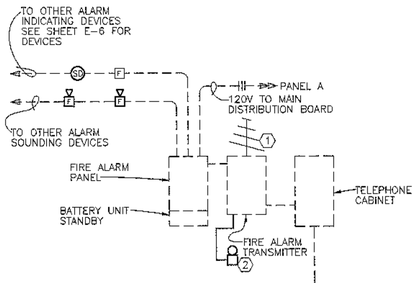

ELECTRICAL NOTES

1. EXISTING TRANSMITTER ANTENNA RELOCATED ON NEW ROOF.
2. PROVIDE NEW FIRE DEPARTMENT BEACON MONACO #SL-1(367-007-00) SEE SHEET E-6 FOR LOCATION.

GENERAL NOTES

1. ITEMS SHOWN DASHED ARE EXISTING.
2. ITEMS SHOWN SOLID ARE NEW.

1 / E2 EXISTING FIRE ALARM RISER DIAGRAM
BUILDING #882 NO SCALE

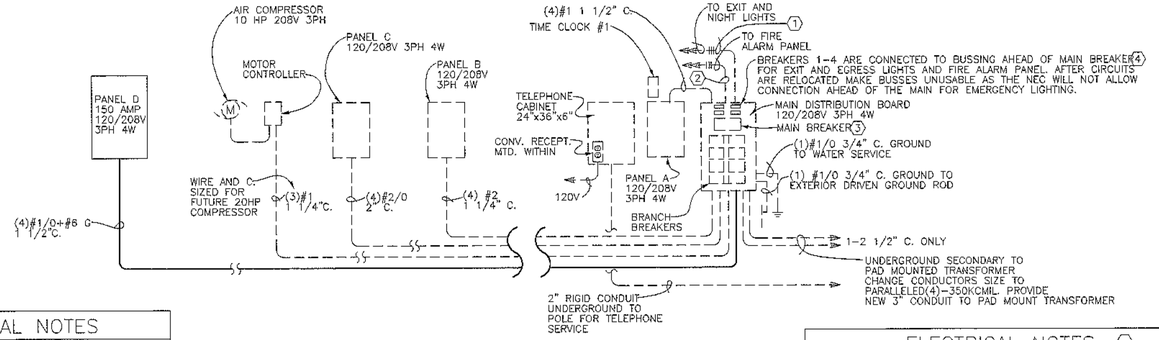

ELECTRICAL NOTES

1. REROUTE CIRCUIT TO PANEL A CIRCUIT #5 IF AVAILABLE OTHERWISE USE SPARE CIRCUIT AND PROVIDE 20A1P BREAKER TO MATCH EXISTING.
2. REROUTE CIRCUIT TO PANEL A CIRCUIT #7 IF AVAILABLE OTHERWISE USE SPARE CIRCUIT AND PROVIDE 20 A 1P BREAKER TO MATCH EXISTING.
3. MAIN BREAKER IS EXISTING AT 500 AMP. CHANGE BREAKER TO NEW 600 AMP MAIN.
4. THIS ARRANGEMENT IS NO LONGER ALLOWED BY THE NEC. REMOVE BREAKERS. REMOVE BUSSING/FINGERS SO NEW BREAKERS CANNOT BE INSTALLED IN THE FUTURE.

2 / E2 ELECTRICAL DISTRIBUTION RISER DIAGRAM
BUILDING #882 NO SCALE

PANEL: MDP (EXISTING)

VOLT: 120/208 AMP: 600 PHASE: 3 WIRE: 4
LOCATION (ROOM #): NOTE: AIC RATING: 10,000
MFG: GROUND BUS: YES
TYPE: MOUNTING: SURFACE
TYPE OF MAIN:

CIRCUIT DESCRIPTION	P	BRK AMP	L	CKT NO	A	B	C	CKT NO	BRK AMP	P	L	CIRCUIT DESCRIPTION
PANEL C (E)	3	150		1			8473 13474	2	125	3		PANEL A (E)
				3	8873 11700			4				
				5		9873 12264		6				
PANEL B (E)	3	100		7		8101		8	100	3		WELDER
				9	12595			10				
				11		8842		12				
PANEL E	3	100		13			3864	14	150	3		PANEL D
				15	3864			16				
				17		3864		18				
BLOCK HEATERS	3	70		19			28497	20	20	1		PROVISION
				21	20712			22	20	1		FIRE ALARM
				23		21937		24				
SPACE				25				26				SPACE
SPACE				27				28				
				29				30				
PHASE TOTALS					57744	56150	54409					
TOTAL WATTS					168303							
TOTAL AMPS					467.6							

(E) EXISTING BREAKER

PANEL MDP

PANEL: A (EXISTING)

VOLT: 120/208 AMP: 225 PHASE: 3 WIRE: 4
LOCATION (ROOM #): 001 NOTE: AIC RATING: YES
MFG: GE GROUND BUS: SURFACE
TYPE: AG MOUNTING:
TYPE OF MAIN: MLO

CIRCUIT DESCRIPTION	P	BRK AMP	L	CKT NO	A	B	C	CKT NO	BRK AMP	P	L	CIRCUIT DESCRIPTION
EF-2		20	1	1	400			2	20	1		SPARE
					240							
FIRE ALARM A		20	1	3		600		4	20	1		SPARE
						840						
PUMP GLP-1	1	20	1	5			600	6	20	1		SPARE
HOIST	3	30	1	7	600			8	20	2		PROVISION
				9	500	600		10				
				11		864		12				
							1130					
PUMP HWP-2	3	20	1	13	1560			14	20	3		HWP-1
				15		900		16				
				17			1689	18				
						900						
RAU-1	3	20	1	19	600		1680	20	20	2		WALL PACKS/POLE LIGHTS
					1860							
				21		600		22				
				23		1200		24	20	2		PROVISION
							1269					
MECHANICAL ROOM LIGHTS	1	20	1	25	480			26				
MECH RM CONTROL PANEL	1	20	1	27		480		28	20	1		PROVISION
EXIT LIGHTS 005	1	20	1	29			480	30	20	1		PROVISION
LIGHTS 005	1	20	1	31	1200			32	20	1		PROVISION
					1200							
POLE/WALL PACK LIGHTS	1	20	1	33		1200		34	20	1		BOILER ROOM RECEPT
						1200						
EHCS - RTV	1	20	1	35			1200	36	20	1		PROVISION
							1200					
ILP-1	3	20	1	37	1200			38				SPARE
					2100							
				39		1800		40				
						2100						
				41			1200	42				
							2100					
PHASE TOTALS					11380	12864	12290					
TOTAL WATTS					36534							
TOTAL AMPS					101.5							

NOTE 1: SINGLE POLE BREAKERS ARE EXISTING
NOTE 2: REPLACE CIRCUITS AS SHOWN.
NOTE 3: PROVIDE NEW 3 POLE BREAKERS FOR CIRCUITS AS SHOWN.

PANEL A

PANEL: B (EXISTING)

VOLT: 120/208 AMP: 225 PHASE: 3 WIRE: 4
LOCATION (ROOM #): 013 NOTE: AIC RATING: YES
MFG: GROUND BUS: SURFACE
TYPE: MOUNTING:
TYPE OF MAIN:

CIRCUIT DESCRIPTION	P	BRK AMP	L	CKT NO	A	B	C	CKT NO	BRK AMP	P	L	CIRCUIT DESCRIPTION
LIGHTS ROOMS - 013, 020, 021, 022, 023, 024	1	20	1	1	1643			2	20	1		RECEPTACLES ROOM 024
						1390						
LIGHTS ROOMS - 013, 013A, 028, 029	1	20	3			1340		4	20	1		RECEPTACLES ROOM 024
							1080					
LIGHTS ROOMS - 009, 012, 015, 016, 017	1	20	5				1487	6	20	1		RECEPTACLES ROOMS 023, 024
								1080				
LIGHTS ROOMS - 007, 008, 010, 011, 014,	1	20	7	1845				8	20	1		RECEPTACLES ROOM 017
					1140							
HEAD BOLT NORTH SIDE	1	20	9			1200		10	20	1		RECEPTACLES ROOM 013
							1260					
HEAD BOLT NORTH SIDE	1	20	11				1600	12	20	1		RECEPTACLES ROOM 015, 016
								1260				
HEAD BOLT NORTH SIDE	1	20	13	1000				14	20	1		RECEPTACLES ROOM 012
					1860							
EF-1	1	20	15			200		16	20	1		RECEPTACLES ROOM 008, 009, 029 NOTE 1
							960					
LIGHTS ROOMS - 002, 006, 027	1	20	17				614	18	20	1		RECEPTACLES ROOM 008
								720				
RECEPTACLES - 008	1	20	19	720				20	20	1		RECEPTACLES ROOM 011
					1080							
PROVISION	1	20	21			1080		22	20	1		RECEPTACLES ROOM 010
PROVISION	1	20	23					24	20	1		RECEPTACLES ROOM 007
							720					
VAV's	1	20	25		1440			26	20	1		RECEPTACLES ROOMS - 011, 019, 034
SPARE				27				28	20	1		RECEPTACLES ROOM 020
						720						
SPARE				29				30	20	1		RECEPTACLES ROOM 022
							720					
SPARE				31				32	20	1		RECEPTACLES ROOM 021
					1080							
SPARE				33				34	20	1		REFRIGERATOR 021
						1200						
SPARE				35				36	20	1		RECEPTACLE CEILING MOVIE SCREEN MOTOR
							500					
SPARE				37				38				SPARE
SPARE				39				40				SPARE
SPARE				41				42				SPARE
PHASE TOTALS					13495	8842	8101					
TOTAL WATTS					29938							
TOTAL AMPS					82.1							

NOTE 1: BREAKERS FOR THIS PANEL ARE EXISTING.

PANEL B

PANEL: C (EXISTING)

VOLT: 120/208 AMP: 225 PHASE: 3 WIRE: 4
LOCATION (ROOM #): NOTE: AIC RATING: CKTS 37-42 FED BY CONTACTOR C-1
MFG: GROUND BUS: 10,000
TYPE: MOUNTING: YES SPLIT 1-36 AND 37-42
TYPE OF MAIN: FLUSH

CIRCUIT DESCRIPTION	P	BRK AMP	L	CKT NO	A	B	C	CKT NO	BRK AMP	P	L	CIRCUIT DESCRIPTION
LIGHTS HIGH BAY	1	40	1	1	1400			2	40	2		PROVISION
LIGHTS HIGH BAY	1	40	1	3		1600		4				
LIGHTS HIGH BAY	1	20	1	5			1500	6	40	2		PROVISION
PROVISION	2	20	1	7	1100			8				
		20	1	9		1300		10	40	2		PROVISION
PROVISION	1	20	1	11			600	12				
LIGHTS ROOM-031	1	20	1	13	609			14	20	1		4 PLEX RECEPT
LIGHTS ROOMS 025, 028	1	20	1	15		600		16	20	1		REFRIGERATOR ROOM-031
RECEPT ROOM 033, 038	1	20	1	17			660	18	20	1		RECEPT ROOM 031
LIGHTS ROOM 034, 032	1	20	1	19	600			20	20	1		RECEPT ROOM - 025, WATER COOLER
LIGHTS ROOM 033, 036	1	20	1	21		650		22	20	1		RECEPT ROOM - 026
WELDER RECEPT	2	50	1	23			600	24	20	1		VAV's
				25	933			26	20	1		RECEPT S/W 005
OIL/WATER SEP.	1	20	1	27		903		28	20	1		OVERHEAD DOOR OPERATORS
PROVISION	1	20	1	29			933	30	20	1		RECEPT SOUTH WALL 008
BREAKER FOR	3	50	1	31	600			32	20	1		PROVISION
CB's 1-12				33	3640	600		34	20	1		PROVISION
				35		3640	600	36	20	1		TWIST LOCK RECPT CEILING
HOIST	2	20	1	37	3640		3640	38	20	1		TWIST LOCK RECPT CEILING
				39		3640		40	20	1		PROVISION
PROVISION	1	40	1	41			3640	42	20	3		PROVISION
PROVISION	3	30	1	43				44				
				45				46				
				47				48	20	1		TWISTLOCK RECPT CEILING
PHASE TOTALS					8873	9873	8473					
TOTAL WATTS					26619							
TOTAL AMPS					73.9							

NOTE 1: BREAKERS FOR THIS PANEL ARE EXISTING.

PANEL C

PANEL: D (EXISTING)

VOLT: 120/208 AMP: 200 PHASE: 3 WIRE: 4
LOCATION (ROOM #): 005 (SHOP) NOTE: AIC RATING: 10,000
MFG: GE GROUND BUS: YES
TYPE: AC MOUNTING: SURFACE
TYPE OF MAIN: MLO

CIRCUIT DESCRIPTION	P	BRK AMP	L	CKT NO	A	B	C	CKT NO	BRK AMP	P	L	CIRCUIT DESCRIPTION
EF-3	3	20	1	1	1080			2	20	1		CORD REEL 030 N
					500							
				3		1000		4	20	1		CORD REEL 030 S
						500						
				5			1000	6	20	1		CORD REEL 005 SW
							500					
DOOR OPENER C	1	20	1	7	1200			8	20	1		CORD REEL 005 SWC
					500							
DOOR OPENER N	1	20	1	9		1200		10	20	1		CORD REEL 005 NWC
						500						
DOOR OPENER S	1	20	1	11			1200	12	20	1		CORD REEL 005 NW
							500					
MAU-2 CONTROLS	1	20	1	13	1080			14	20	1		CORD REEL 005 SE
					500							
LIGHTS/RECEPT ROOM 035	1	20	1	15		1440		16	20	1		CORD REEL 005 SEC
							500					
MAU-2	3	15	1	17			600	18	20	1		CORD REEL 005 NEC
							500					
				19	600			20	20	1		CORD REEL 005 NE
					500							
				21		600		22	20	1		SHOP LIGHTS 030
							1365					
RECEPT ROOM 030	1	20	1	23			1320	24				SHOP LIGHTS 030
							1365					
RECEPT ROOM 030	1			25	1320			26	50	3		RAF-1
					3000							
RECEPT ROOM 030	1			27		1320		28				
						3000						
EF-4	3	20	1	29			1220	30				
							3001					
				31	1320			32	60	3		CU-1
					3772							
				33		1320		34				
						3772						
EF-5	3	20	1	35			1320	36				
							3772					
				37	1320			38	35	3		AHU-1
					2100							
				39		1320		40				
						2100						
SPARE	1	20	1	41			2100	42	60	1		MAU-1/AHU-1 CONTROL PANEL
							2100					
PHASE TOTALS					20712	21937	20497					
TOTAL WATTS					63146							
TOTAL AMPS					175.4							

PANEL D

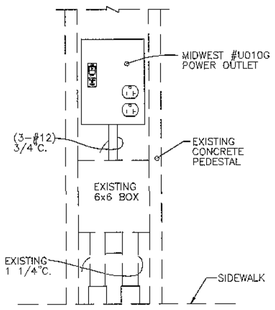

3 / E2 HEADBOLT HEATER POWER OUTLET
NO SCALE

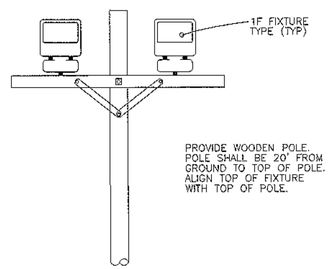

4 / E2 SITE LIGHTING DETAIL
NO SCALE

AS BUILT

REV.	DATE	DESCRIPTION	DRAWN	APPR'D

DRAWN BY: BRUNSVOLD
DESIGNED BY: GLASSING
REVIEWED BY: GLASSING

TRANSPORTATION FACILITY, BUILDING 882
DETAILS

PROJECT NUMBER: NZAS 93-0107
ACAD DRAWING NUMBER: 93107E02
RECORD FILE NUMBER:

SCALE: 1/8"=1'-0" DATE: 17NOV97 PLATE: E-2 PAGE: 39 OF 44

SPACE COMMAND
MALMSTROM AIR FORCE BASE, MONTANA

1	MECHANICAL ROOM
2	TOILET
3	LOCKER ROOM
4	BENCH STOCK
5	MAINTENANCE ROOM
6	REPORTS & ANALYSIS ROOM
7	KEY PUNCH ROOM
8	SUPERINTENDANTS ROOM
9	CHIEF DISPATCHER
10	TAXI DISPATCHER
11	DRIVERS LOUNGE
12	QC & E OFFICE
13	ADMINISTRATION OFFICE
13A	OFFICE
13B	OFFICE
14	WOMENS RESTROOM
15	TRANSPORTATION
16	JANITOR
17	CORRIDOR
17A	ENTRY VESTIBULE
18	MENS RESTROOM
19	
20	CLASSROOM3
21	TESTING ROOM
22	PROJECTION ROOM
23	BOOK STORAGE
24	STORAGE
25	PRODUCTION CONTROL
26	MAINTENANCE OFFICE
27	BATTERY SHOP
28	COMMANCING OFFICER
29	SECRETARY
30	OFFICE
31	OFFICE
32	OFFICE
33	OFFICE
34	BREAKROOM
35	CORRIDOR
36	LIBRARY
37	TOOL ROOM
38	DRUM STORAGE

GENERAL NOTES

1. ALL ITEMS SHOWN DASHED ARE TO BE REMOVED OR RELOCATED.
2. ALL ITEMS SHOWN SOLID ARE TO REMAIN.

SHEET WORK NOTES ⬡

1. REMOVE EXISTING LIGHT FIXTURE. SEE SHEET E-4 FOR NEW LIGHTING LAYOUT AND FIXTURE TYPE. REUSE EXISTING CIRCUITRY FOR NEW LIGHTING.
2. EXISTING PANEL B IS TO REMAIN AND BE REUSED.
3. REMOVE EXHAUST FAN, LOCATED ON ROOF, FOR BATTERY HOOD. FAN TO BE RELOCATED AND RECONNECTED.
4. DISCONNECT/REMOVE EXHAUST FAN, LOCATED ON ROOF, FOR WELDING HOOD.
5. REMOVE EXISTING LIGHT. REINSTALL AFTER EXTERIOR WORK IS COMPLETED. REUSE EXISTING CIRCUITRY.
6. REMOVE EXISTING LIGHT. REINSTALL AT NEW LOCATION. SEE SHEET E-4 FOR NEW LOCATION.
7. DISCONNECT POWER TO AIR HANDLING UNIT AS REQUIRED.
8. DISCONNECT POWER TO EXHAUST FAN.
9. LIGHT FIXTURES TO REMAIN. REPLACE BALLAST WITH NEW ELECTRONIC BALLASTS AND T8 LAMPS. 2 LAMPS PER 4' FIXTURE.
10. SAVE EXISTING FIXTURES. REPLACE BALLASTS WITH ELECTRONIC BALLASTS AND T8 LAMPS. CLEAN LENSES AND FIXTURE AND REINSTALL. SEE SHEET E-4.
11. MAINTAIN EXISTING CIRCUITRY FOR CONNECTION TO NEW LIGHTING. SEE SHEET E-3.
12. EXISTING AIR COMPRESSOR. DISCONNECT AND RECONNECT NEW. HP TO BE THE SAME.
13. DISCONNECT EXISTING HUH. SEE SHEET E-5 FOR NEW LOCATION.
14. REMOVE EXIT LIGHT AND REPLACE WITH NEW REUSE FIXTURE BOX AND CIRCUITRY.
15. EXISTING TELEPHONE, FIBER FOR EMCS, FIRE ALARM TRANSMITTER AND CATV ARE TO REMAIN.

SOUND STOPPING/FIRE STOPPING NOTES

1. ALL PENETRATIONS THROUGH WALLS, PARTITIONS AND RACEWAYS BE IT EXISTING AFTER DEMOLITION OR INSTALLED DURING CONSTRUCTION SHALL BE PROVIDED WITH AN EXPANDABLE FOAM FILLER FOR SOUND STOPPING.
2. ANY PENETRATIONS THROUGH WALLS THAT ARE FIRE RELATED WALLS, PARTITIONS AND RACEWAYS BE IT EXISTING AFTER DEMOLITION OR INSTALLED DURING CONSTRUCTION SHALL BE "FIRESTOPPED" WITH APPROPRIATE UL RATED FIRE STOPPING MATERIAL. SEE SHEET A-3 FOR RATED WALLS. SEE 4/A-3 FOR DETAIL.

1/E3 ELECTRICAL DEMOLITION PLAN
BUILDING #882 SCALE: 1/8" = 1'-0"

REF N.

AS BUILT

SPACE COMMAND
MALMSTROM AIR FORCE BASE, MONTANA

REV.	DATE	DESCRIPTION	DRAWN	APPR'D

DRAWN BY: BRUNSVOLD
DESIGNED BY: GLASSING
REVIEWED BY: GLASSING

TRANSPORTATION FACILITY, BUILDING 882
ELECTRICAL DEMO PLAN

PROJECT NUMBER: NZAS 93-0107
ACAD DRAWING NUMBER: 93107E03
RECORD FILE NUMBER

SCALE: 1/8"=1'-0" | DATE: 17NOV97 | PLATE: E-3 | PAGE 40 OF 44

001	MECHANICAL ROOM
002	MENS TOILET
003	MENS LOCKER ROOM
004	BENCH STOCK
005	AUTO MAINTENANCE ROOM
006	WOMENS LOCKER ROOM
007	LGTR OFFICER
008	LGTR NCOIC
009	MOBILITY STORAGE
010	COMPUTER TRAINING
011	QUALITY, SAFETY, & TRAINING
012	CONFERENCE ROOM
013	ADMINISTRATION
013A	ADMINISTRATION CLOSET
014	WOMENS TOILET
015	CCF OFFICE
016	CC OFFICE
017	CCQ OFFICE
018	MENS TOILET
019	LGTC ADMINISTRATION
020	LGTC NCOIC
021	BREAK ROOM
022	LGTC OFFICER
023	FLEET WAITING
024	FLEET MANAGEMENT
025	OFFICE
026	OFFICE
027	BATTERY ROOM
028	CORRIDOR
029	CORRIDOR
030	AUTOMOTIVE MAINTENANCE SHOP
031	MAINTENANCE BREAK ROOM
032	TOOL STORAGE
033	METALS SHOP
034	JANITOR
035	MECHANICAL ROOM ABOVE
036	LIBRARY

GENERAL NOTES

1. DASHED ITEMS ARE EXISTING

SHEET WORK NOTES ○

1. EXISTING PANEL B
2. EXISTING MOMENTARY CONTACT SWITCH FOR SHOP LIGHTING. SWITCH CONTROLS CONTACTOR C1. REUSE SWITCHING AND CONTACTOR C1.
3. EXISTING LIGHT FIXTURE. RETROFIT WITH EMERGENCY BALLAST WITH 1100 LUMEN OUTPUT MINIMUM.
4. EXISTING FIXTURE REINSTALLED. NEW ELECTRONIC BALLAST AND T8 LAMPS (2 LAMP FIXTURE). CLEAN FIXTURE AS REQUIRED.
5. REUSE EXISTING CIRCUITRY FOR LIGHTING.
6. CONNECT TO RECEPTACLES. SEE E-5.
7. CONTACTOR C2. PROVIDE 2POLE 30 AMP MECHANICALLY HELD LIGHTING CONTACTOR IN A NEMA 1 ENCLOSURE. GE #ML2021G.
8. NEW EXIT LIGHT CONNECTED TO EXISTING CIRCUITRY.
9. EXISTING FIXTURE REMOUNTED ON WALL.
10. PROVIDE 1 POLE 20 AMP BREAKER TO MATCH EXISTING.
11. CONTACTOR C1 LOCATED AS INTERGRAL WITH PANEL C.

SOUND STOPPING/FIRE STOPPING NOTES

1. ALL PENETRATIONS THROUGH WALLS, PARTITIONS AND RACEWAYS BE IT EXISTING AFTER DEMOLITION OR INSTALLED DURING CONSTRUCTION SHALL BE PROVIDED WITH AN EXPANDABLE FOAM FILLER FOR SOUND STOPPING.
2. ANY PENETRATIONS THROUGH WALLS THAT ARE FIRE RELATED WALLS, PARTITIONS AND RACEWAYS BE IT EXISTING AFTER DEMOLITION OR INSTALLED DURING CONSTRUCTION SHALL BE "FIRESTOPPED" WITH APPROPRIATE UL RATED FIRE STOPPING MATERIAL. SEE SHEET A-3 FOR RATED WALLS. SEE 4/A-3 FOR DETAIL.

1/E4 ELECTRICAL LIGHTING PLAN
BUILDING #882 SCALE: 1/8" = 1'-0"

REF N.

AS BUILT

REV.	DATE	DESCRIPTION	DRAWN	APPR'D

DRAWN BY BRUNSVOLD
DESIGNED BY GLASSING
REVIEWED BY GLASSING

TRANSPORTATION FACILITY, BUILDING 882
ELECTRICAL LIGHTING PLAN

PROJECT NUMBER NZAS 93-0107
ACAD DRAWING NUMBER 93107E04
RECORD FILE NUMBER

SCALE 1/8"=1'-0" | DATE 17NOV97 | PLATE E-4 | PAGE 41 OF 44

SPACE COMMAND
MALMSTROM AIR FORCE BASE, MONTANA

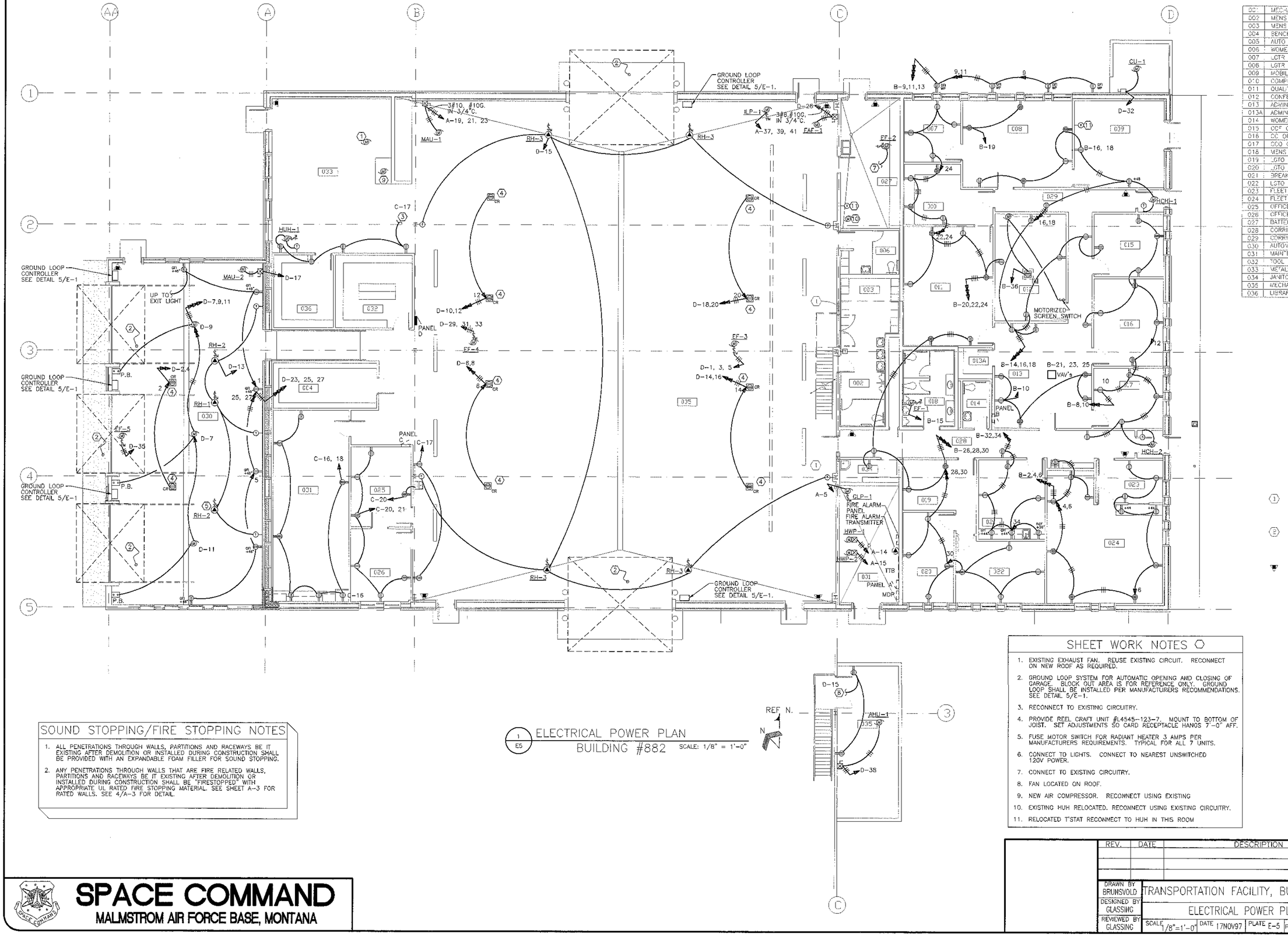

001	MECHANICAL ROOM
002	MENS TOILET
003	MENS LOCKER ROOM
004	BENCH STOCK
005	AUTO MAINTENACE ROOM
006	WOMENS LOCKER ROOM
007	LGTR OFFICER
008	LGTR NCOIC
009	MOBILITY STORAGE
010	COMPUTER TRAINING
011	QUALITY, SAFETY, & TRAINING
012	CONFERENCE ROOM
013	ADMINISTRATION
013A	ADMINISTRATION CLOSET
014	WOMENS TOILET
015	OCP OFFICE
016	CC OFFICE
017	CCQ OFFICE
018	MENS TOILET
019	LGTO ADMINISTRATION
020	LGTO NCOIC
021	BREAK ROOM
022	LGTO OFFICER
023	FLEET WAITING
024	FLEET MANAGEMENT
025	OFFICE
026	OFFICE
027	BATTERY ROOM
028	CORRIDOR
029	CORRIDOR
030	AUTOVOTIVE MAINTENANCE SHOP
031	MAINTENANCE BREAK ROOM
032	TOOL STORAGE
033	METALS SHOP
034	JANITOR
035	MECHANICAL ROOM ABOVE
036	LIBRARY

SOUND STOPPING/FIRE STOPPING NOTES

1. ALL PENETRATIONS THROUGH WALLS, PARTITIONS AND RACEWAYS BE IT EXISTING AFTER DEMOLITION OR INSTALLED DURING CONSTRUCTION SHALL BE PROVIDED WITH AN EXPANDABLE FOAM FILLER FOR SOUND STOPPING.
2. ANY PENETRATIONS THROUGH WALLS THAT ARE FIRE RELATED WALLS, PARTITIONS AND RACEWAYS BE IT EXISTING AFTER DEMOLITION OR INSTALLED DURING CONSTRUCTION SHALL BE "FIRESTOPPED" WITH APPROPRIATE UL RATED FIRE STOPPING MATERIAL. SEE SHEET A-3 FOR RATED WALLS. SEE 4/A-3 FOR DETAIL.

1/E5 ELECTRICAL POWER PLAN
BUILDING #882 SCALE: 1/8" = 1'-0"

SHEET WORK NOTES

1. EXISTING EXHAUST FAN. REUSE EXISTING CIRCUIT. RECONNECT ON NEW ROOF AS REQUIRED.
2. GROUND LOOP SYSTEM FOR AUTOMATIC OPENING AND CLOSING OF GARAGE. BLOCK OUT AREA IS FOR REFERENCE ONLY. GROUND LOOP SHALL BE INSTALLED PER MANUFACTURERS RECOMMENDATIONS. SEE DETAIL 5/E-1.
3. RECONNECT TO EXISTING CIRCUITRY.
4. PROVIDE REEL CRAFT UNIT #L4545-123-7. MOUNT TO BOTTOM OF JOIST. SET ADJUSTMENTS SO CARD RECEPTACLE HANGS 7'-0" AFF.
5. FUSE MOTOR SWITCH FOR RADIANT HEATER 3 AMPS PER MANUFACTURERS REQUIREMENTS. TYPICAL FOR ALL 7 UNITS.
6. CONNECT TO LIGHTS. CONNECT TO NEAREST UNSWITCHED 120V POWER.
7. CONNECT TO EXISTING CIRCUITRY.
8. FAN LOCATED ON ROOF.
9. NEW AIR COMPRESSOR. RECONNECT USING EXISTING
10. EXISTING HUH RELOCATED. RECONNECT USING EXISTING CIRCUITRY.
11. RELOCATED T'STAT RECONNECT TO HUH IN THIS ROOM

AS BUILT

REV.	DATE	DESCRIPTION	DRAWN	APPR'D

SPACE COMMAND
MALMSTROM AIR FORCE BASE, MONTANA

DRAWN BY BRUNSVOLD	TRANSPORTATION FACILITY, BUILDING 882	PROJECT NUMBER NZAS 93-0107
DESIGNED BY GLASSING	ELECTRICAL POWER PLAN	ACAD DRAWING NUMBER (CAMELACY\E\E05) 93107E05
REVIEWED BY GLASSING	SCALE 1/8"=1'-0" DATE 17NOV97 PLATE E-5 PAGE 42 OF 44	RECORD FILE NUMBER

001	MECHANICAL ROOM
002	MENS TOILET
003	MENS LOCKER ROOM
004	BENCH STOCK
005	AUTO MAINTENANCE ROOM
006	WOMENS LOCKER ROOM
007	LGTR OFFICER
008	LGTR NCOIC
009	MOBILITY STORAGE
010	COMPUTER TRAINING
011	QUALITY, SAFETY, & TRAINING
012	CONFERENCE ROOM
013	ADMINISTRATION
013A	ADMINISTRATION CLOSET
014	WOMENS TOILET
015	CCF OFFICE
016	CC OFFICE
017	CCQ OFFICE
018	MENS TOILET
019	LGTC ADMINISTRATION
020	LGTC NCOIC
021	BREAK ROOM
022	LGTC OFFICER
023	FLEET WAITING
024	FLEET MANAGEMENT
025	OFFICE
026	OFFICE
027	BATTERY ROOM
028	CORRIDOR
029	CORRIDOR
030	AUTOMOTIVE MAINTENANCE SHOP
031	MAINTENANCE BREAK ROOM
032	TOOL STORAGE
033	METALS SHOP
034	JANITOR
035	MECHANICAL ROOM ABOVE
036	LIBRARY

1/E6 ELECTRICAL SPECIAL SYSTEMS PLAN
BUILDING #882 SCALE: 1/8" = 1'-0"

REF N.

SHEET WORK NOTES ⬡

1. PROVIDE 3/4" CONDUIT UP TO CEILING SPACE. PULL 2 CATEGORY 6 4 PAIR CABLES TO ROOM 019. IDENTIFY CABLE WITH ROOM NUMBER AND LOCATION OF BOX. TYPICAL FOR ALL VOICE/DATA OUTLETS. TERMINATION AT BOTH ENDS BY BASE COMMUNICATION SQUADRON.
2. EXISTING DEVICE RELOCATED.
3. EXISTING BELL REPLACED WITH NEW HORN/STROBE.
4. ENTIRE OFFICE AREA IS PLENUM SPACE ABOVE CEILING. USE PLENUM RATED CABLE FOR ALL SPECIAL SYSTEMS WIRING.
5. FIRE DEPARTMENT BEACON. MOUNT ON CANOPY.
6. STROBE / HORN PROVIDE BY FIRE SPRINKLER CONTRACTOR. PROVIDE BACK BOX AND FIRE ALARM CONNECTION.

SOUND STOPPING/FIRE STOPPING NOTES

1. ALL PENETRATIONS THROUGH WALLS, PARTITIONS AND RACEWAYS BE IT EXISTING AFTER DEMOLITION OR INSTALLED DURING CONSTRUCTION SHALL BE PROVIDED WITH AN EXPANDABLE FOAM FILLER FOR SOUND STOPPING.
2. ANY PENETRATIONS THROUGH WALLS THAT ARE FIRE RELATED WALLS, PARTITIONS AND RACEWAYS BE IT EXISTING AFTER DEMOLITION OR INSTALLED DURING CONSTRUCTION SHALL BE "FIRESTOPPED" WITH APPROPRIATE UL RATED FIRE STOPPING MATERIAL. SEE SHEET A-3 FOR RATED WALLS. SEE 4/A-3 FOR DETAIL.

AS BUILT

REV.	DATE	DESCRIPTION	DRAWN	APPR'D

DRAWN BY: BRUNSVOLD
DESIGNED BY: GLASSING
REVIEWED BY: GLASSING

TRANSPORTATION FACILITY, BUILDING 882
SPECIAL SYSTEMS PLAN

PROJECT NUMBER: NZAS 93-0107
ACAD DRAWING NUMBER: 93107E06
RECORD FILE NUMBER

SCALE: 1/8"=1'-0" | DATE: 17NOV97 | PLATE E-6 | PAGE 43 OF 44

SPACE COMMAND
MALMSTROM AIR FORCE BASE, MONTANA

SITE LEGEND

—PE—	PRIMARY ELECTRICAL (OVERHEAD)
—SE—	SECONDARY ELECTRICAL (UNDERGROUND)
—UGE—	UNDERGROUND ELECTRICAL
—T—	TELEPHONE
—UGT—	UNDERGROUND TELEPHONE
⇦	PARKING LOT LIGHT
▪	CONCRETE POST
◂	TRANSFORMER

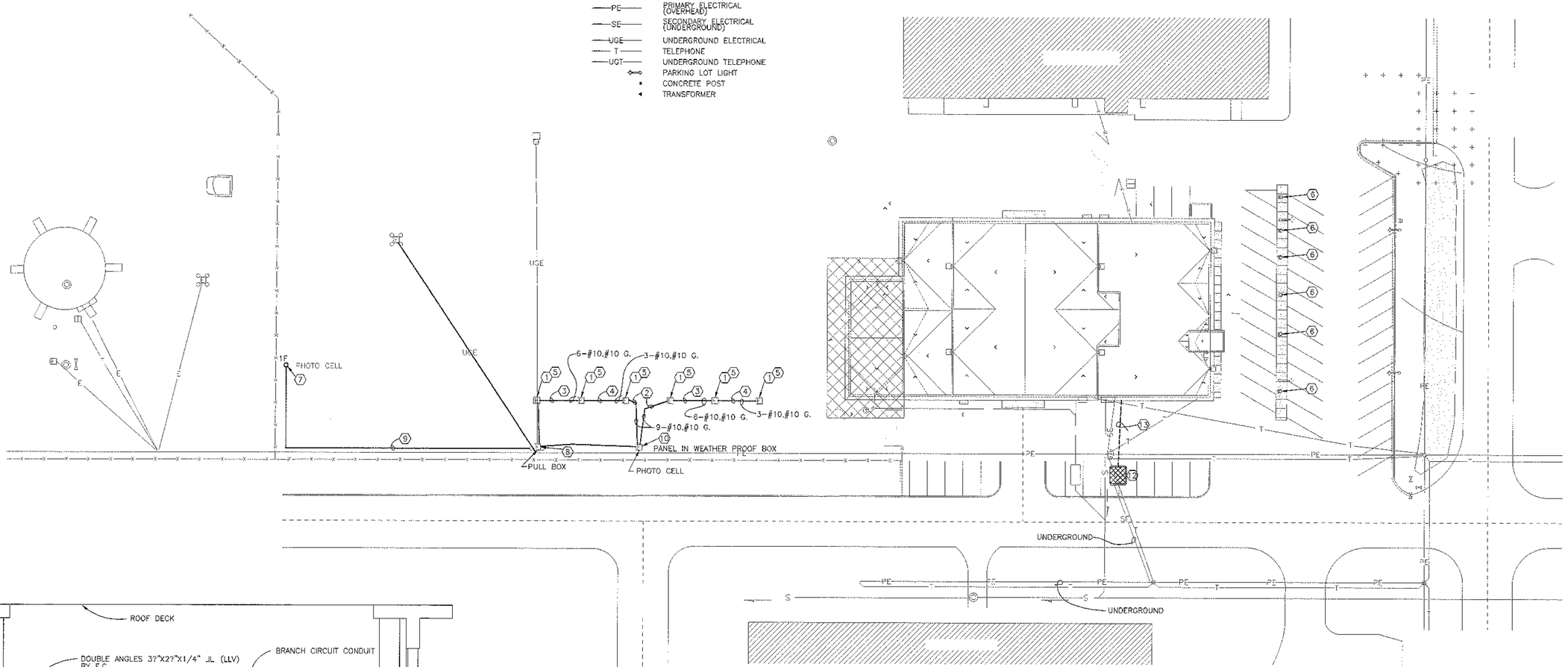

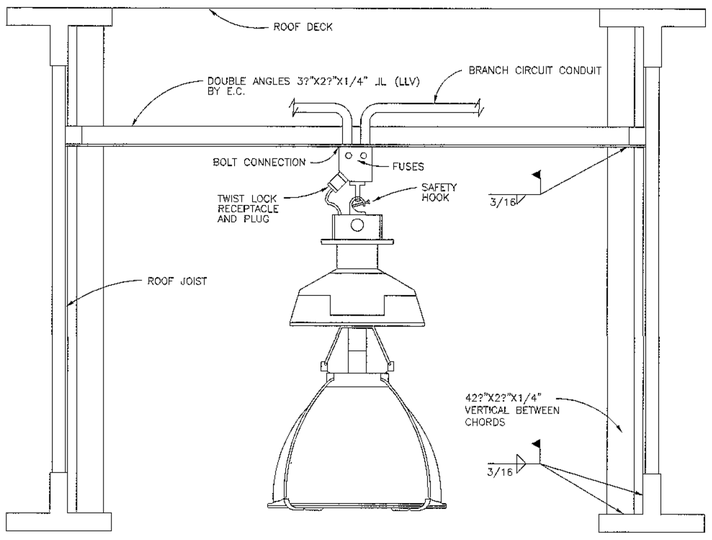

2 / E-2 HIGH BAY LIGHT FIXTURE MOUNTING DETAIL

NOT TO SCALE

1 / E-7 ELECTRICAL SITE PLAN

SCALE: 1"=30'-0"

REF N.

SOUND STOPPING/FIRE STOPPING NOTES

1. ALL PENETRATIONS THROUGH WALLS, PARTITIONS AND RACEWAYS BE IT EXISTING AFTER DEMOLITION OR INSTALLED DURING CONSTRUCTION SHALL BE PROVIDED WITH AN EXPANDABLE FOAM FILLER FOR SOUND STOPPING.
2. ANY PENETRATIONS THROUGH WALLS THAT ARE FIRE RELATED WALLS, PARTITIONS AND RACEWAYS BE IT EXISTING AFTER DEMOLITION OR INSTALLED DURING CONSTRUCTION SHALL BE "FIRESTOPPED" WITH APPROPRIATE UL RATED FIRE STOPPING MATERIAL. SEE SHEET A-3 FOR RATED WALLS. SEE 4/A-3 FOR DETAIL.

GENERAL NOTES

1. ALL TRENCHING AND PAVEMENT REPAIR SHALL BE THE RESPONSIBILITY OF THE ELECTRICAL CONTRACTOR.

ELECTRICAL NOTES ⬡

1. REMOVE EXISTING PEDESTAL.
2. PROVIDE 1 1/4" PVC UNDER EXISTING PAVEMENT.
3. PROVIDE 1" PVC UNDER EXISTING PAVEMENT.
4. PROVIDE 3/4" PVC UNDER EXISTING PAVEMENT.
5. PROVIDE NEW MIDWEST U011010 WITH PEDESTAL.
6. EXISTING J-BOX FOR HEADBOLT HEATER RECEPTACLES. PROVIDE NEW RECEPTACLES. SEE DETAIL 3/E-2 FOR FURTHER REQUIREMENTS.
7. LOCATION FOR NEW LIGHT POLE. SEE DETAIL 4/E-2.
8. EXISTING EXTERIOR POWER PANEL. DELETE TIME CLOCK AND TEMPERATURE SENSOR. REMOVE CONTACTOR AND PROVIDE 200A DISCONNECT FOR PANEL INSIDE EXISTING HOFFMAN ENCLOSURE. REWIRE EXISTING FEED TO PANEL.
9. PROVIDE 1" C. WITH 3-#10+10G. RUN CONDUIT UP POLE TO LIGHT.
10. PROVIDE 2 POLE 30 AMP CONTACTOR WITH 120 VOLT COIL IN NEMA 3R ENCLOSURE WITH PHOTO CELL FOR CONTROL.
11. PROVIDE 12 1 POLE 20 AMP SQUARE D BREAKERS FOR EXISTING PANEL.
12. EXISTING PAD MOUNT TRANSFORMER.
13. NEW CONDUCTORS IN EXISTING CONDUIT. SEE DETAIL 2/E.2

AS BUILT

REV.	DATE	DESCRIPTION	DRAWN	APPR'D

DRAWN BY BRUNSVOLD	TRANSPORTATION FACILITY, BUILDING 882	PROJECT NUMBER NZAS 93-0107
DESIGNED BY GLASSING	SITE PLAN	ACAD DRAWING NUMBER 93107E07
REVIEWED BY GLASSING	SCALE 1"=30' DATE 17NOV97 PLATE E-7 PAGE 44 OF 44	RECORD FILE NUMBER

SPACE COMMAND

MALMSTROM AIR FORCE BASE, MONTANA

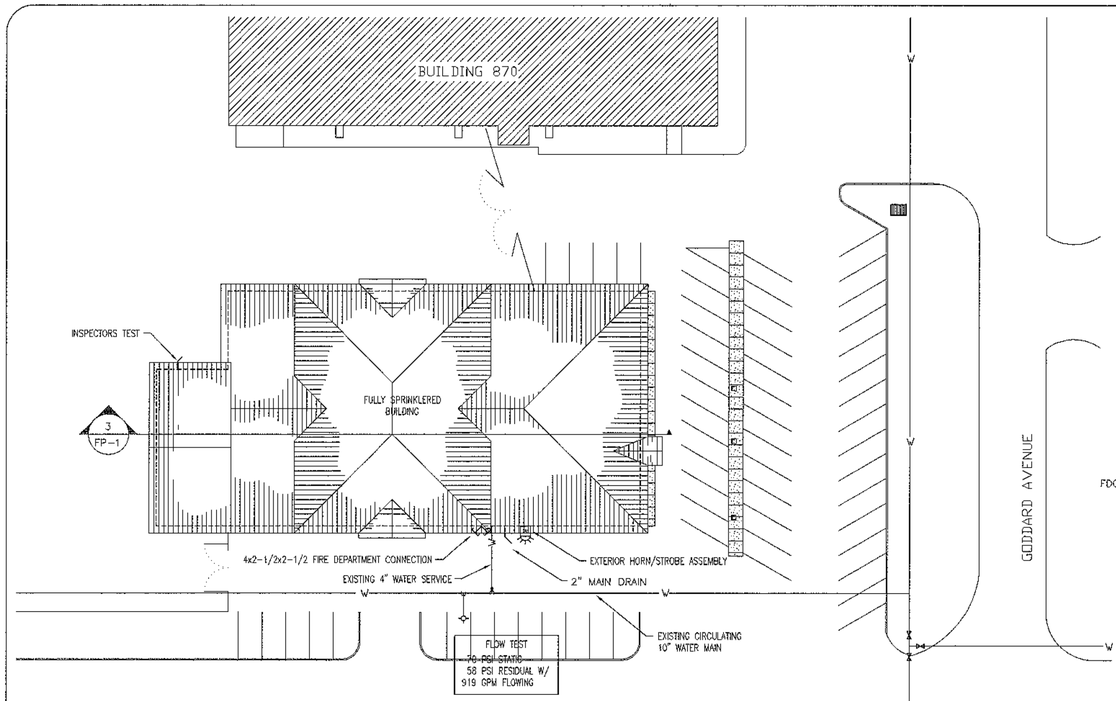

1 FP-1 FIRE SPRINKLER SITE PLAN

SCALE: 1"=30'-0"

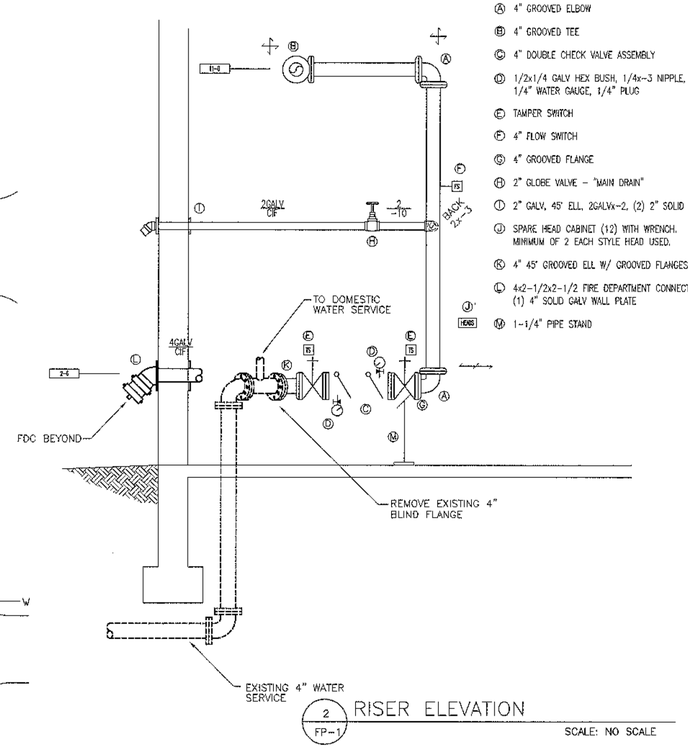

2 FP-1 RISER ELEVATION

SCALE: NO SCALE

RISER LEGEND

- (A) 4" GROOVED ELBOW
- (B) 4" GROOVED TEE
- (C) 4" DOUBLE CHECK VALVE ASSEMBLY
- (D) 1/2x1/4 GALV HEX BUSH, 1/4x-3 NIPPLE, 1/4" 3-WAY VALVE, 1/4" WATER GAUGE, 1/4" PLUG
- (E) TAMPER SWITCH
- (F) 4" FLOW SWITCH
- (G) 4" GROOVED FLANGE
- (H) 2" GLOBE VALVE - "MAIN DRAIN"
- (I) 2" GALV, 45° ELL, 2GALVx-2, (2) 2" SOLID WALL PLATES
- (J) SPARE HEAD CABINET (12) WITH WRENCH. MINIMUM OF 2 EACH STYLE HEAD USED.
- (K) 4" 45° GROOVED ELL W/ GROOVED FLANGES
- (L) 4x2-1/2x2-1/2 FIRE DEPARTMENT CONNECTION WITH ID PLATE, (1) 4" SOLID GALV WALL PLATE
- (M) 1-1/4" PIPE STAND

FIRE SPRINKLER LEGEND

SYMBOL	DESCRIPTION
●	PENDENT SPRINKLER ON - LINE
◉	PENDENT SPRINKLER ON - DROP
○	UPRIGHT SPRINKLER ON - LINE
▶	SIDEWALL SPRINKLER HEAD
	1-WAY SWAY BRACE
	2-WAY SWAY BRACE
FS	FLOW SWITCH
TS	TAMPER SWITCH
	OUTSIDE STEM & YOKE GATE VALVE
	ANGLE VALVE
	GLOBE VALVE
	INSPECTORS TEST AND DRAIN
	CHECK VALVE
	HORN/STROBE ASSEMBLY
	FIRE HYDRANT
	FIRE DEPARTMENT CONNECTION
7'-11	PIPE CENTERLINE FROM FINISHED FLOOR
R-15	CEILING HEIGHT
	RISER
	DISTANCE PIPE FROM DECK
	FLANGE
	GROOVED ELBOW UP
	GROOVED ELBOW DOWN
	GROOVED COUPLING
	SCREWED ELBOW DOWN
	SCREWED ELBOW UP
	HANGER SYMBOL #1
	HANGER SYMBOL #2
	HANGER SYMBOL #3
	HANGER SYMBOL #4
	HANGER SYMBOL #5
	SOLID WALL PLATE
HDBS	HEAD BOX
	TAPPING VALVE
	THRUST BLOCKING/PLUG
	NEW SPRINKLER PIPE
	EXISTING UNDERGROUND WATER MAIN/FIRE MAIN
AFF	ABOVE FINISHED FLOOR
ATR	ALL THREAD ROD
A.S.	AUTOMATIC SPRINKLER
CIF	CUT IN FIELD
DN	DOWN
FG	FINISHED GRADE
GBE	GROOVE BOTH ENDS
GOE	GROOVE ONE END
OS&Y	OUTSIDE STEM & YOKE
RN	RISER NIPPLE
SK	SKETCH
TBE	THREAD BOTH ENDS
TOE	THREAD ONE END
T&G	THREAD AND GROOVE
UON	UNLESS OTHERWISE NOTED
W/	WITH
GALV	GALVANIZED

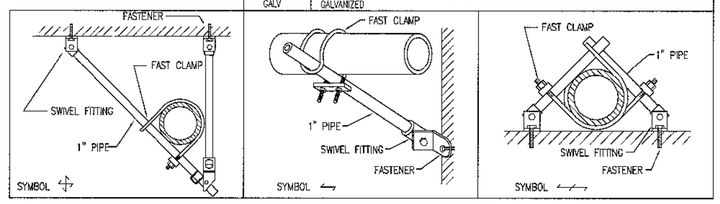

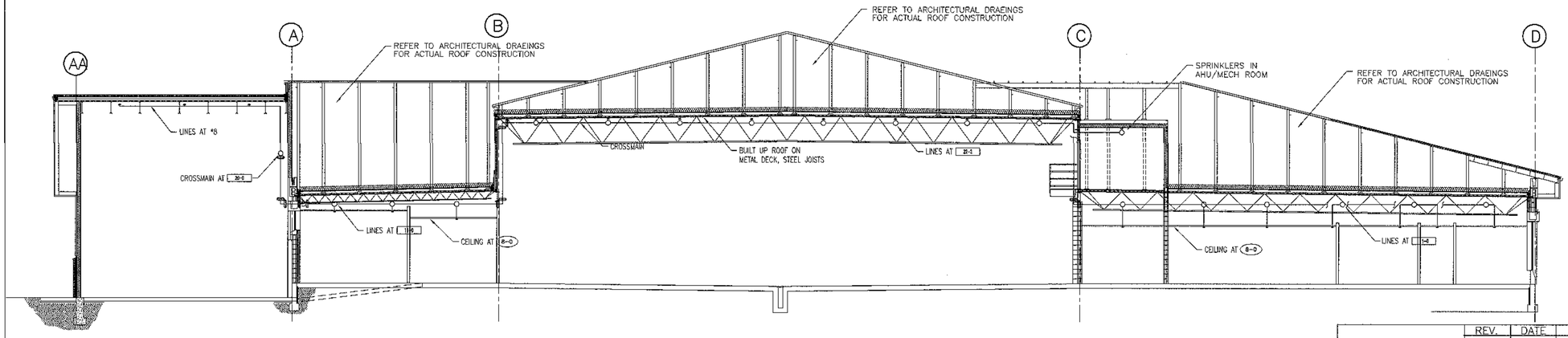

3 FP-1 BUILDING SECTION

SCALE: 1/8"=1'-0"

FIRE SPRINKLER NOTES

1) SPRINKLER SYSTEM SHALL COMPLY WITH N.F.P.A. #13 1994 AND UNIFORM BUILDING CODE.

2) SPRINKLER SYSTEM SHALL BE DESIGNED TO PROVIDE A HYDRAULIC DENSITY OF .20 G.P.M. OVER THE REMOTE 1500 SQUARE FEET WITH A 250 G.P.M. HOSE ALLOWANCE.

3) 1" THRU 2" PIPE SHALL BE SCHEDULE 40 BLACK STEEL PIPE WITH SCREWED FITTINGS.

4) 2-1/2" THRU 4" PIPE SHALL BE SCHEDULE 10 BLACK STEEL PIPE WITH GROOVED FITTINGS.

5) SPRINKLER HEADS SHALL BE ORIFICE, STYLE AND TEMPERATURE TO MEET CODE.

6) SYSTEM TEST SHALL BE WITNESSED BY MALMSTROM AIR FORCE BASE CONTRACTING OFFICER PRIOR TO ANY PORTION BEING CONCEALED - GIVE 48 HOURS NOTICE.

SPACE COMMAND

MALMSTROM AIR FORCE BASE, MONTANA

AS BUILT

REV.	DATE	DESCRIPTION	DRAWN	APPR'D

DRAWN BY J. ANDERSON	TRANSPORTATION FACILITY, BUILDING 882		PROJECT NUMBER NZAS 93-0107
DESIGNED BY J. ANDERSON	LEGEND, SITE PLAN, SECTION, RISER, NOTES		ACAD DRAWING NUMBER C:\SPA\GADD\FP1 9310?FP1
REVIEWED BY D. HUGHES	SCALE AS SHOWN	DATE 17NOV97 / PLATE FP-1 / PAGE 27 OF 44	RECORD FILE NUMBER

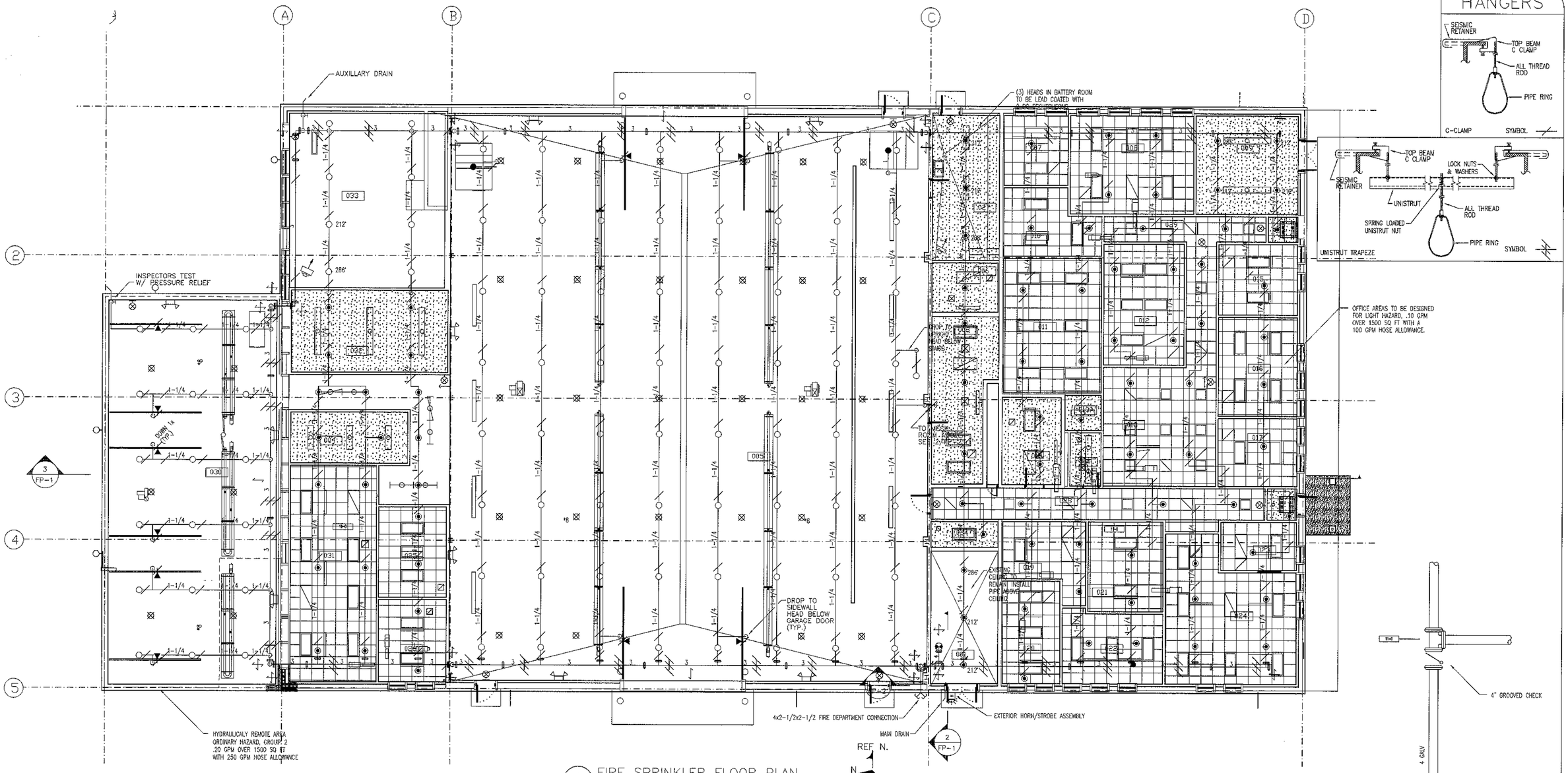

1 FP-2 FIRE SPRINKLER FLOOR PLAN
SCALE: 1/8" = 1'-0"

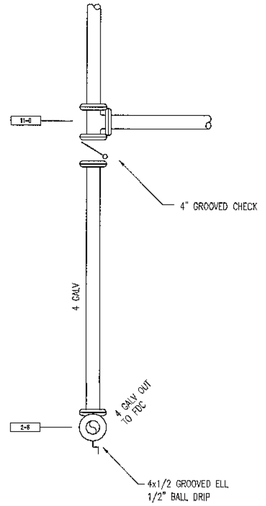

4 FP-2 FDC DETAIL
SCALE: NO SCALE

GENERAL NOTES

1. PROVIDE SPLIT CHROME WALL PLATES AT ALL EXPOSED WALL PENETRATIONS
2. PROVIDE FIRE CAULKING AT ALL PENETRATIONS OF FIRE RATED WALLS. SEE ARCH. PLANS FOR WALL LOCATIONS.

HANGER NOTES

HANG PIPE LEVEL AT 11-0 ABOVE CEILINGS 3/8" C-CLAMP, 3/8x-CIF ATR & RING

– OR –

HANG PIPE AT #8 WITH 3/8" C-CLAMP, 3/8x-6 ATR & RING.

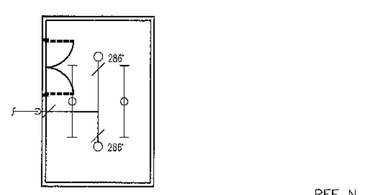

2 FP-2 MECHANICAL ROOM SPRINKLER PLAN
SCALE: 1/8" = 1'-0"

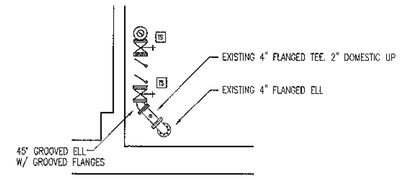

3 FP-2 RISER ROOM SPRINKLER PLAN
SCALE: 1/4" = 1'-0"

AS BUILT

REV.	DATE	DESCRIPTION	DRAWN	APPR'D

DRAWN BY J. ANDERSON	TRANSPORTATION FACILITY, BUILDING 882	PROJECT NUMBER NZAS 93-0107
DESIGNED BY J. ANDERSON	FIRE SPRINKLER FLOOR PLAN	ACAD DRAWING NUMBER 93107FP2
REVIEWED BY D. HUGHES	SCALE AS SHOWN DATE 17NOV97 PLATE FP-2 PAGE 28 OF 44	RECORD FILE NUMBER

SPACE COMMAND
MALMSTROM AIR FORCE BASE, MONTANA

VARIABLE AIR VOLUME BOX SCHEDULE

PLAN CODE	MFGR	MODEL NO.	MAX AIR FLOW [CFM]	MIN AIR FLOW [CFM]	SIZE	INLET SIZE	HEATING COIL OUTPUT [BTU/H]	HEATING COIL HW FLOW [GPM]	HEATING COIL COIL WPD [ft wtr]	EWT [deg F]	LWT [deg F]	EAT [deg F]	LAT [deg F]	MAX COIL & BOX APD [in wtr]	PIPING RUNOUT SIZE [in]
V-1	TEMPMASTER	HSW-7	190	100	A	5	7076	1.00	0.4	200	186	55	128	0.03	3/4
V-2	TEMPMASTER	HSW-7	420	300	C	7	17226	3.50	4.0	200	190	55	114	0.10	1
V-3	TEMPMASTER	HSW-7	250	100	A	5	6380	0.50	0.1	200	174	55	121	0.05	1/2
V-4	TEMPMASTER	HSW-7	440	200	B	6	10788	1.00	0.4	200	178	55	111	0.14	3/4
V-5	TEMPMASTER	HSW-7	300	120	A	5	7818	1.00	0.4	200	184	55	122	0.07	3/4
V-6	TEMPMASTER	HSW-7	810	450	D	8	34662	2.50	4.7	200	172	55	135	0.50	3/4
V-7	TEMPMASTER	HSW-7	670	670	C	7	27016	3.00	3.1	200	182	55	97	0.21	1
V-8	TEMPMASTER	HSW-7	420	200	C	7	11832	1.00	0.4	200	176	55	116	0.10	3/4
V-9	TEMPMASTER	HSW-7	580	300	C	7	17516	4.00	4.8	200	191	55	115	0.16	1
V-10	TEMPMASTER	HSW-7	710	400	D	8	32509	2.50	4.7	200	174	55	139	0.40	3/4
V-11	TEMPMASTER	HSW-7	120	100	A	5	6380	0.50	0.1	200	174	55	121	0.01	1/2
V-12	TEMPMASTER	HSW-7	250	110	A	5	7447	1.00	0.4	200	185	55	125	0.05	3/4
V-13	TEMPMASTER	HSW-7	405	175	B	6	10904	2.50	2.0	200	191	55	119	0.13	3/4
			5565	3225				24.00							

DIFFUSERS SCHEDULE

PLAN CODE	MFGR	MODEL NO	NOMINAL FACE SIZE	NECK SIZE	FLEX SIZE	AIR FLOW [cfm]	MATERIAL	FINISH	FRAME STYLE	REMARKS
SD-1	KRUEGER	1975A	2'-0" LONG	2 SLOT-3/4"	8"	70-120	STEEL	WHITE	LAY-IN	
SD-2	KRUEGER	1975A	4'-0" LONG	2 SLOT-3/4"	8"	100-165	STEEL	WHITE	LAY-IN	
SD-3	KRUEGER	SHPC	12x12	6x6	-	55-110	STEEL	WHITE	SURFACE	
SD-4	KRUEGER	SHPC	15x15	9X9	-	165-175	STEEL	WHITE	SURFACE	
SD-5	KRUEGER	DPL	21X8	18X6	-	615	NOTE 1	WHITE	SURFACE	
SD-6	KRUEGER	DPL	43X14	40X12	-	1780	NOTE 1	WHITE	SURFACE	
RG-1	KRUEGER	EGC 5	10X10	8X8	-	120-250	NOTE 1	WHITE	SURFACE	
RG-2	KRUEGER	EGC 5	14X14	12X12	-	405	NOTE 1	WHITE	SURFACE	
RG-3	KRUEGER	EGC 5	24X24	10X10	-	110-330	NOTE 1	WHITE	LAY-IN	
RG-4	KRUEGER	EGC 5	24X24	14X14	-	600	NOTE 1	WHITE	LAY-IN	
TG-1	KRUEGER	S80H	26X18	24X16	-		STEEL	WHITE	SURFACE	
EG-1	KRUEGER	S80H	8X8	6X6	-	60	STEEL	WHITE	SURFACE	
EG-2	KRUEGER	S80H	12X12	10X10	-	125-200	STEEL	WHITE	SURFACE	
EG-3	KRUEGER	S80H	16X16	14X14	-	365	STEEL	WHITE	SURFACE	

NOTE 1: STEEL FRAME WITH ALUMINUM GRILLE

HEAT EXCHANGER SCHEDULE

PLAN CODE	MFGR	MODEL NO	TYPE	DIA [in]	LENGTH [ft]	PASS	OUTPUT [MBH]	SHELL GPM	SHELL WPD [ft wtr]	SHELL EWT [deg F]	SHELL LWT [deg F]	SHELL VEL [fpm]	TUBES FLOW [gpm]	TUBES WPD [ft wtr]	TUBES EWT [deg F]	TUBES LWT [deg F]	TUBES VEL [fpm]	FOULING FACTOR
HX-1		P06412-6H	QHTWU	6	6	4	1200	88	10.35	169	199.53	3.28	27.7	6.42	360	260	4.44	0.0005

WALL LOUVER SCHEDULE

PLAN CODE	MFGR	MODEL NO.	SERVICE	FRAME TYPE	FREE AREA (SF)	W X H (INCHES)	CFM	VEL (FPM)	APD.	FINISH	REMARKS
L-1	RUSKIN	L8115	INTAKE	FLANGE	9.77	84X36	4600	471	0.04	FACTORY PAINT	AHU-1
L-2	RUSKIN	L8115	EXHAUST	FLANGE	13.78	72X60	10750	780	0.10	FACTORY PAINT	EAF-1
L-3	RUSKIN	L8115	INTAKE	FLANGE	16.67	84X60	8900	534	0.05	FACTORY PAINT	MUA-1
L-4	RUSKIN	L8115	INTAKE	FLANGE	3.77	36X36	1850	491	0.45	FACTORY PAINT	MUA-2

HEATING WATER PUMP SCHEDULE

PLAN CODE	MFGR	MODEL NO	FLOW [gpm]	HEAD [ft wtr]	RPM	HP	POWER	CONNECTION SIZE	REMARKS
HWP-1	TACO	1641	88	40	1750	2	208/3/60	2"	PRIMARY HEATING WATER PUMP
HWP-2	TACO	1641	88	40	1750	2	208/3/60	2"	BACKUP HEATING WATER PUMP
ILP-1	TACO	1635	65	22	1750	3/4	208/3/60	2"	RUN-AROUND LOOP PUMP
GLP-1	SKIDMORR	HCPS-42	5	40	3500	1/2	115/1/60	1"	GLYCOL FILL PUMP

NOTE: CARTRIDGE TYPE CIRCULATORS WITH NON-METALLIC IMPELLERS ARE UNACCEPTABLE.

HYDRONIC CABINET HEATER SCHEDULE

PLAN CODE	MFGR	MODEL NO	ARRNGMNT	MBH NOTE 1	GPM	SCFM	COIL ROWS	MOTOR	POWER	ROOM NO	PIPING R/O SIZE	WPD (FT WATER)
HCH-1	STERLING	RW 200	HORZ. RECES.	7.5	0.75	220	2	FREE DISCHARGE	115/1/60	RM 122	1/2	2.5
HCH-2	STERLING	RW 200	HORZ. RECES.	7.5	0.75	220	2	FREE DISCHARGE	115/1/60	RM 122	1/2	2.5

NOTE 1: CAPACITY AT 60 DEGREES F EAT & 200 DEGREES F EWT

AIR HANDLING UNIT SCHEDULE

PLAN CODE	AHU-1	MUA-1	MUA-2	EAF-1
MANUFACTURER	McQUAY	McQUAY	McQUAY	McQUAY
SIZE / ARRANGEMENT	10/BLOW THRU	17/DRAW THRU	3/DRAW THRU	21/DRAW THRU
SUPPLY FAN (MODEL)	CAH010FBAC	CAH017FHAC	CAH003FHAC	CAH017FVAC
NO. / DIAMETER (IN)	1 / 15.0	1 / 18.3	1 / 9.5	1 / 18.03
TYPE	10b-FC	17b-FC	3a-FC	17b-FC
ACFM @ 3600 FT	4600 (1)	8900	1850	10750 (6)
ESP (IN WTR)	1.75"	0.5"	0.5"	0.50"
TSP (IN WTR)	3.57"	0.91	0.96	0.63
RPM @ ACFM & TSP	1436	677	1306	713
HP	5.0	5.0	3.0	7.5
POWER	208/3/60	208/3/60	208/3/60	208/3/60
HEATING COIL				
TYPE	WC	W	UW	—
SIZE (IN)/ FACE AREA (SF)	27X40 / 9	36x64 / 16	18X24 / 2.75	—
ROWS / FIN SPACING (FPF)	1 / 84	2 / 120	2 / 108	—
FACE VELOCITY (FPM)	511	556	673	—
EAT/LAT (DEG F)	39 / 70.9 (2)	-30 / 73.4 (5)	-30 / 72.2 (5)	—
EWT/LWT (DEG F)	200 / 149.2 (2)	200 / 136.2	200 / 178 (5)	—
OUTPUT (MBH)	140 (2)	881.1	108.9 (5)	—
GPM	6.0 (2)	30.0	17.0 (5)	—
WPD (FT WTR)	0.6	2.9	1.7	—
AUXILIARY COIL - NOTE 8				
TYPE	—	DD	—	DD
SIZE (IN)/ FACE AREA (SF)	—	33x64 / 14.70	—	2-18X66 / 16.5
ROWS / FIN SPACING (FPF)	—	4 / 97	—	8 / 139
FACE VELOCITY (FPM)	—	607	—	652
EAT/LAT (DEG F)	—	-30 / 3.4 (3)	—	65 / 31.7 (3)
EWT/LWT (DEG F)	—	35.4/-3.7 (3)(7)	—	30 / 37 (3)(7)
OUTPUT (MBH)	—	158.2 (3)	—	158.2 (3)
GPM	—	11.2 (4)	—	65 (4)
WPD (FT WTR)	—	5.65 (4)	—	8.81 (4)
COOLING COIL				
TYPE	DX	—	—	—
FACE AREA (SF)	9.56	—	—	—
FACE VELOCITY (FPM)	421	—	—	—
EAT-DB/WB	84/62	—	—	—
LAT-DB/WB	54.4/51.6	—	—	—
SUCITON TEMP (F)	45	—	—	—
OUTPUT-TOTAL/SENS (MBH)	130.2/128.4	—	—	—
FILTERS				
TYPE	2" AM AIR300X	2" AM AIR300X	2" AM AIR300X	2" AM AIR300X
NO. / SIZE / SQ. FT	6/24X20X2	6/24X20X2	6/24X12X2	6/24X20X2

NOTES:
1) MAX SYSTEM AIR FLOW CALCULATED USING 83% SYSTEM DIVERSITY.
2) HEATING COIL PERFORMANCE BASED ON MIN AIR FLOW 3225 CFM AND 35% GLYCOL MIXTURE.
3) HEAT RECOVERY CONDITIONS BASED ON MIN EXHAUST AIR FLOW 4960 CFM AND 35% GLYCOL MIXTURE.
4) FROST CONTROL VALVE OPERATES WHEN OSA TEMP. DROPS BELOW -7.5F. WPD BASED ON FULL FLOW 65 GPM.
5) HEATING COIL PERFORMANCE BASED ON 35% GLYCOL MIXTURE.
6) PROVIDES EXHAUST FOR BOTH MUA-1 AND MUA-2.
7) SUPPLY COIL LWT MIXES W/ BYPASS TO MAINTAIN A MIN 30F EXHAUST COIL EWT.
8) BASE BID INCLUDES CASING SECTION FOR AUXILIARY COIL. ADDITIVE #1 IS ONLY THE COIL.

AIR COOLED CONDENSING UNIT SCHEDULE

PLAN CODE	MFGR	MODEL NO	CAPACITY TONS	AMBIENT TEMP	REFRIG	NO. OF FANS	FAN DIA.	MOTOR HP	MOTOR RPM	POWER	SATURATED SUCTION TEMP.
CU-1	TRANE	TTA120B 300	10	95	R-22	1	28"	1	1100	208/3/60	43

NOTE: CONDENSING UNIT FURNISHED WITH TWO COMPRESSORS.

RELIEF AIR HOOD SCHEDULE

PLAN CODE	MFGR	MODEL NO	SERVICE	NECK SIZE	HOOD FREE AREA (SF)	CFM	NECK VEL (FPM)	PRESSURE DROP	REMARKS
RH-1	PENN	AIRETTE	RELIEF	24X48	8.0	4600	575	0.05	AHU-1 RELIEF

ACCESSORIES: 1) BIRD SCREEN 2) ANTI CONDENSATE COATING 3) BACKDRAFT DAMPER

HYDRONIC UNIT HEATER SCHEDULE

PLAN CODE	MFGR	MODEL NO	MBH (NOTE 1)	FLOW (GPM)	CFM	RPM	HP	POWER	CONTROL	PIPING R/O SIZE	WPD (FT WTR)
HUH-1	STERLING	1-15-60	34.6	3.5	815	1550	1/20	115/1/60	24V. STAT	1"	0.23

NOTE 1: CAPACITY AT 60 DEGREES F EAT & 200 DEGREES F EWT

HVAC SYMBOLS LEGEND

RETURN GRILLE

FLEX DUCT TO LINEAR DIFFUSER SEE SCHEDULE FOR FLEX SIZE.

TURNING VANE ELBOW

45 DEG. HIGH EFFICIENCY LATERAL TAKE-OFF WITH VOLUME DAMPER

TEMPERATURE SENSOR OR THERMOSTAT

MANUAL BALANCING DAMPER (VOLUME DAMPER)

HOT WATER HEATING SUPPLY PIPE

HOT WATER HEATING RETURN PIPE

ADDITIVE #1 - HEAT RECOVERY SYSTEM

HVAC ABBREVIATIONS

ACFM ACTUAL CFM
AFF ABOVE FINISHED FLOOR
AHU AIR HANDLING UNIT
AL ALUMINUM
AMP AMPERE
APD AIR PRESSURE DROP
BTU/H BRITISH THERMAL UNIT/HOUR
CFM CUBIC FEET PER MINUTE
DB DRY BULB
DDC DIRECT DIGITAL CONTROL
DEG F DEGREE FAHRENHEIT
DIA DIAMETER
EAT ENTERING WATER TEMPERATURE
FPM FEET PER MINUTE
FT FEET
GA GAUGE
GPM GALLONS PER MINUTE
HP HORSEPOWER
HWR HOT WATER RETURN
HWS HOT WATER SUPPLY
HZ FREQUENCY
ID INNER DIAMETER
ILP INCLINE PUMP
IN INCHES
KW KILOWATT
LAT LEAVING AIR TEMPERATURE
LWT LEAVING WATER TEMPERATURE
MAX MAXIMUM
MBH BTU/H (THOUSAND)
MFGR MANUFACTURER
MFGR MANUFACTURER
MIN MINIMUM
N/A NOT APPLICABLE
NO NORMALLY CLOSED
NTS NORMALLY OPEN
OA NOT TO SCALE
OAT OUTDOOR AIR TEMPERATURE
OBD OPPOSED BLADE DAMPER
PH PHASE (ELECTRICAL)
R/O RUN OUT
RG RETURN GRILLE
RH RELATIVE HUMIDITY
RND ROUND
RPM REVOLUTIONS PER MINUTE
RQD REQUIRED
SA SUPPLY AIR
SD SUPPLY DIFFUSER
SF SQUARE FEET
SND SOUND
SP STATIC PRESSURE
TC TEMPERATURE CONTROL
TN TON
TSP TOTAL STATIC PRESSURE
TYP TYPICAL
V VOLT
VAV VARIABLE AIR VOLUME
VD VOLUME DAMPER
VEL VELOCITY
W/ WITH
W/O WITHOUT
WB WET BULB
WPD WATER PRESSURE DROP

EXHAUST FAN SCHEDULE

PLAN CODE	LOCATION	MFGR	MODEL NO	DRIVE	CFM	RPM	E.S.P. [in wtr]	HP	POWER	TYPE	REMARKS
EF-1	RM 018	PENN	DX13RL	DIRECT	815	1503	0.375"	1/6	115/1/60	ROOF	ADMIN GENERAL EXHAUST
EF-2	RM 027	PENN	DX10RL	DIRECT	190	1175	0.375"	1/12	115/1/60	ROOF	BATTERY HOOD EXH.
EF-3	RM 005	NATIONAL GARAGE VENTILATION	PB-14	DIRECT	1800	3450	6.5"	3	208/3/60	—	VEHICLE EXH. MAIN SHOP
EF-4	RM 005	NATIONAL GARAGE VENTILATION	PB-14	DIRECT	1800	3450	6.5"	3	208/3/60	—	VEHICLE EXH. MAIN SHOP
EF-5	RM 030	NATIONAL GARAGE VENTILATION	PB-12	DIRECT	1200	3450	6.5"	3	208/3/60	—	VEHICLE EXH. NEW SHOP

NOTE: 1) FURNISH EF-1 AND EF-2 WITH BIRD SCREEN, BACKDRAFT DAMPER, SPEED CONTROL, DISCONNECT SWITCH, AND CURB.
2) FANS PERFORMANCE BASED ON 3660 FT ELEVATION.

HOSE REEL SCHEDULE

PLAN CODE	MFGR	MODEL NO	REWIND CONFIG.	HOSE DIAMETER	HOSE LENGTH	NOZZLE MODEL	NOZZLE MATERIAL	NOZZLE ACCESSORIES
HR-1	NATIONAL GARAGE VENTILATION	HR-1	SPRING REWIND	6"	30 FT	CTA-6	EPDM	W/ BUILT IN DAMPER

RADIANT HEATING SCHEDULE

PLAN CODE	MFGR	MODEL NO	INPUT (MBH)	OUTPUT (MBH)	NOMINAL TUBE LENGTH (FT)	TUBE CONFIG.	POWER	VENT SIZE (IN)
RH-1	AMBI-RAD	SC29/U35-NG	100	81	35	U-TUBE	120/1/60	4
RH-2	AMBI-RAD	SC38/U35-NG	130	105.3	35	U-TUBE	120/1/60	4
RH-3	AMBI-RAD	SC44/S40-NG	150	121.5	40	STRAIGHT	120/1/60	4

AIR SEPARATORS

PLAN CODE	MFGR	MODEL NO	FLOW (GPM)	PIPE SIZE	WPD (FT WTR)
AS-1	TACO	AC3F	88	3"	2.79
AS-2	TACO	AC25F	65	2 1/2"	2.4

APPROXIMATE HEATING WATER SYSTEM VOLUME = 200 GALLONS.

EXPANSION TANKS

PLAN CODE	MFGR	MODEL NO	TOTAL VOLUME	ACCEPTANCE VOLUME	PRECHARGE PRESSURE
XT-1	TACO	CX-130	35 GAL	15 GAL	15 PSIG
XT-2	TACO	PS015	15 GAL	4.8 GAL	10 PSIG

APPROXIMATE RUN-AROUND LOOP SYSTEM VOLUME = 80 GALLONS.

NOTE: IDENTIFICATION BY MANUFACTURERS NAME DOES NOT INDICATE A PREFERENCE FOR THE PRODUCTS LISTED, BUT INDICATES A MINIMUM LEVEL OF QUALITY, STYLE, AND PERFORMANCE. ALTERNATE MANUFACTURERS WILL BE REVIEWED BY THE CONTRACTING OFFICER AND WILL BE CONSIDERED PROVIDING, THEY, IN THE CONTRACTING OFFICER'S OPINION ARE A MINIMUM EQUAL TO THAT SPECIFIED.

AS BUILT

REV.	DATE	DESCRIPTION	DRAWN	APPR'D

SPACE COMMAND

MALMSTROM AIR FORCE BASE, MONTANA

DRAWN BY NITSCHKE
DESIGNED BY NITSCHKE
REVIEWED BY BAKER

TRANSPORTATION FACILITY, BUILDING 882

MECH LEGEND AND SCHEDULES

SCALE NOT TO SCALE | DATE 17NOV97 | PLATE M-1 | PAGE 29 OF 44

PROJECT NUMBER NZAS 93-0107
ACAD DRAWING NUMBER 0:\MALMDC\BLDG882 93107M01
RECORD FILE NUMBER

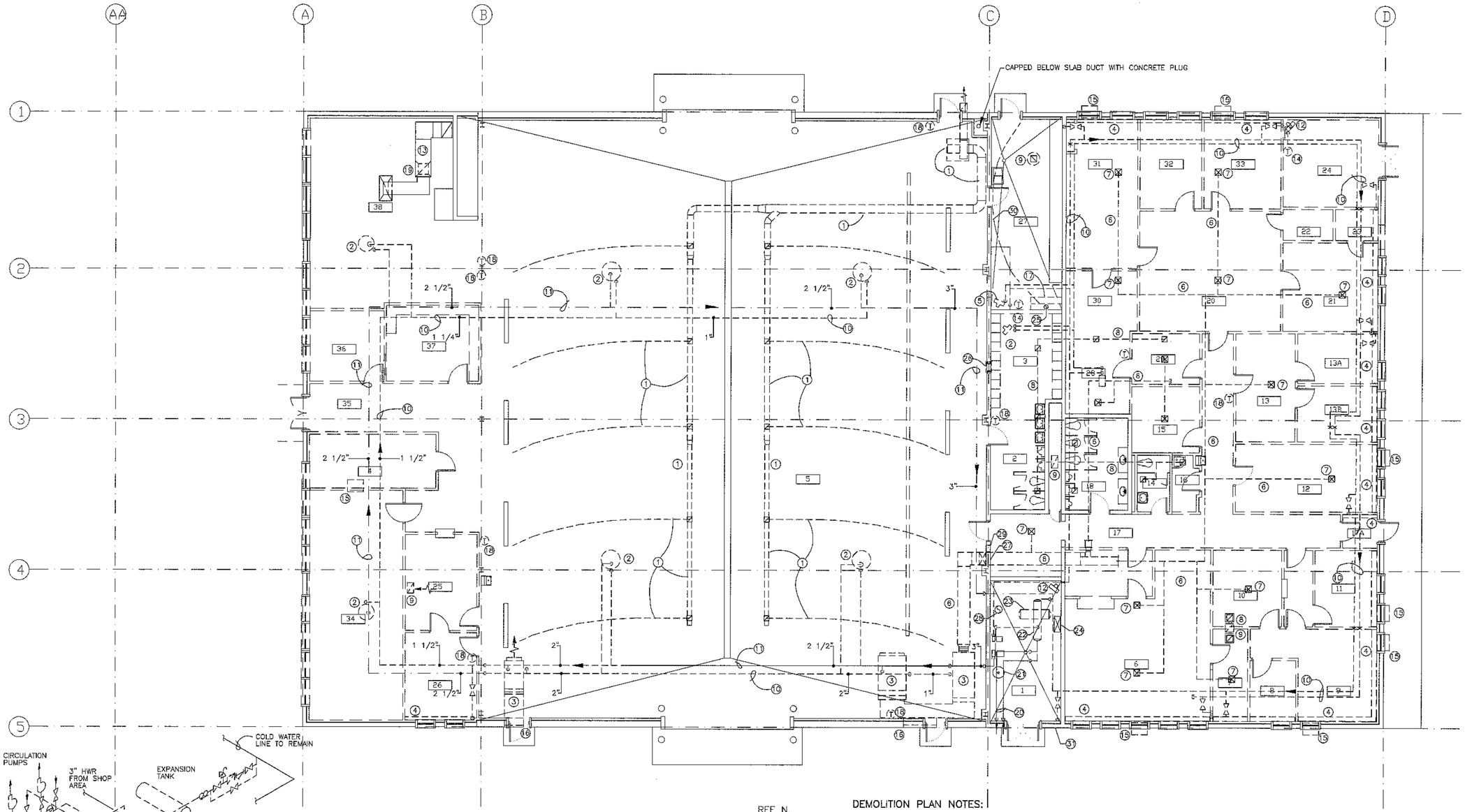

1	MECHANICAL ROOM
2	TOILET
3	LOCKER ROOM
4	BENCH STOCK
5	MAINTENACE ROOM
6	REPORTS & ANALYSIS ROOM
7	KEY PUNCH ROOM
8	SUPERINTENDANTS ROOM
9	CHIEF DISPATCHER
10	TAXI DISPATCHER
11	DRIVERS LOUNGE
12	QC & E OFFICE
13	ADMINISTRATION OFFICE
13A	OFFICE
13B	OFFICE
14	WOMENS RESTROOM
15	TRANSPORTATION
16	JANITOR
17	CORRIDOR
17A	ENTRY VESTIBULE
18	MENS RESTROOM
19	
20	CLASSROOM3
21	TESTING ROOM
22	PROJECTION ROOM
23	BOOK STORAGE
24	STORAGE
25	PRODUCTION CONTROL
26	MAINTENANCE OFFICE
27	BATTERY SHOP
28	COMMANDING OFFICER
29	SECRETARY
30	OFFICE
31	OFFICE
32	OFFICE
33	OFFICE
34	BREAKROOM
35	CORRIDOR
36	LIBRARY
37	TOOL ROOM
38	DRUM STORAGE

1 / M-2 MECH DEMOLITION FLOOR PLAN
BUILDING #882 SCALE: 1/8" = 1'-0"

REF N.

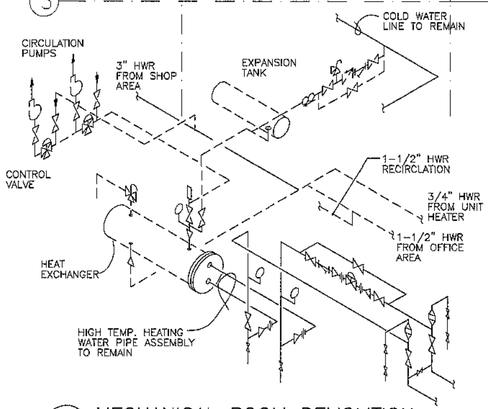

A / M-2 MECHANICAL ROOM DEMOLITION

DEMOLITION PLAN NOTES:

1. VEHICLE EXHAUST DUCTWORK, HOSE DROPS, AND EXHAUST FAN TO BE REMOVED.
2. HYDRONIC UNIT HEATERS TO BE REMOVED. REMOVE PIPING RUNOUTS TO MAIN AND CAP.
3. AIR HANDLING UNITS TO BE REMOVED
4. FINNED TUBE RADIATION TO BE REMOVED
5. HYDRONIC UNIT HEATER TO BE RELOCATED. SEE 1/M-3.
6. SUPPLY DUCTWORK TO BE REMOVED.
7. DIFFUSERS TO BE REMOVED.
8. EXHAUST DUCTWORK TO BE REMOVED.
9. ROOF MOUNTED EXHAUST FAN TO BE REMOVED.
10. HYDRONIC PIPING AND VALVES TO BE REMOVED.
11. HYDRONIC PIPING TO REMAIN.
12. HYDRONIC UNIT HEATER AND THERMOSTAT TO REMAIN.
13. EXHAUST DUCTWORK TO REMAIN
14. THERMOSTAT TO BE RELOCATED. SEE 1/M-4
15. WINDOW MOUNTED AIR CONTIDIONER TO BE REMOVED.
16. INTAKE AIR LOUVER TO BE REMOVED.
17. BATTERY EXHAUST HOOD TO BE RELOCATED. SEE 1/M-3.
18. THERMOSTAT TO BE REMOVED.
19. ROOF MOUNTED EXHAUST FAN TO BE REMOVED AND REINSTALLED AFTER NEW ROOF INSTALLATION. COORDINATE WITH ROOFING CONTRACTOR.
20. 2" EXISTING HIGH TEMP. WATER SUPPLY AND RETURN TO REMAIN. SEE A/M-2.
21. EXISTING WATER HEATER TO BE REMOVED.
22. HEAT EXCHANGER TO BE REMOVED. SEE A/M-2.
23. CEILING MOUNTED EXPANSION TANK TO BE REMOVED. SEE A/M-2.
24. 30x12 INTAKE AIR DUCT TO REMAIN.
25. ROOF MOUNTED BATTERY EXHAUST HOOD FAN TO BE REMOVED.
26. TRANSFER GRILLE TO BE REMOVED. G.C. TO PATCH REMAINING HOLE.
27. HOLE IN WALL TO BE PATCHED BY G.C.
28. REMOVE EXISTING BOILER VENT STACK FROM ROOF.
29. SIDEWALL EXHAUST FAN TO BE REMOVED. HOLE TO BE PATCHED BY G.C.
30. EMERGENCY HORN CABLE TO BE MODIFIED AS REQUIRED TO OPERATE SAME AS EXISTING.
31. OUTDOOR TEMPERATURE SENSORS TO BE RELOCATED TO NEW EXTERIOR FINISH.

AS BUILT

SPACE COMMAND
MALMSTROM AIR FORCE BASE, MONTANA

REV.	DATE	DESCRIPTION	DRAWN	APPR'D

DRAWN BY NITSCHKE | DESIGNED BY NITSCHKE | REVIEWED BY BAKER

TRANSPORTATION FACILITY, BUILDING 882

MECH DEMO FLOOR PLAN

SCALE 1/8"=1'-0" | DATE 17NOV97 | PLATE M-2 | PAGE 30 OF 44

PROJECT NUMBER NZAS 93-0107

ACAD DRAWING NUMBER 93107M02

RECORD FILE NUMBER

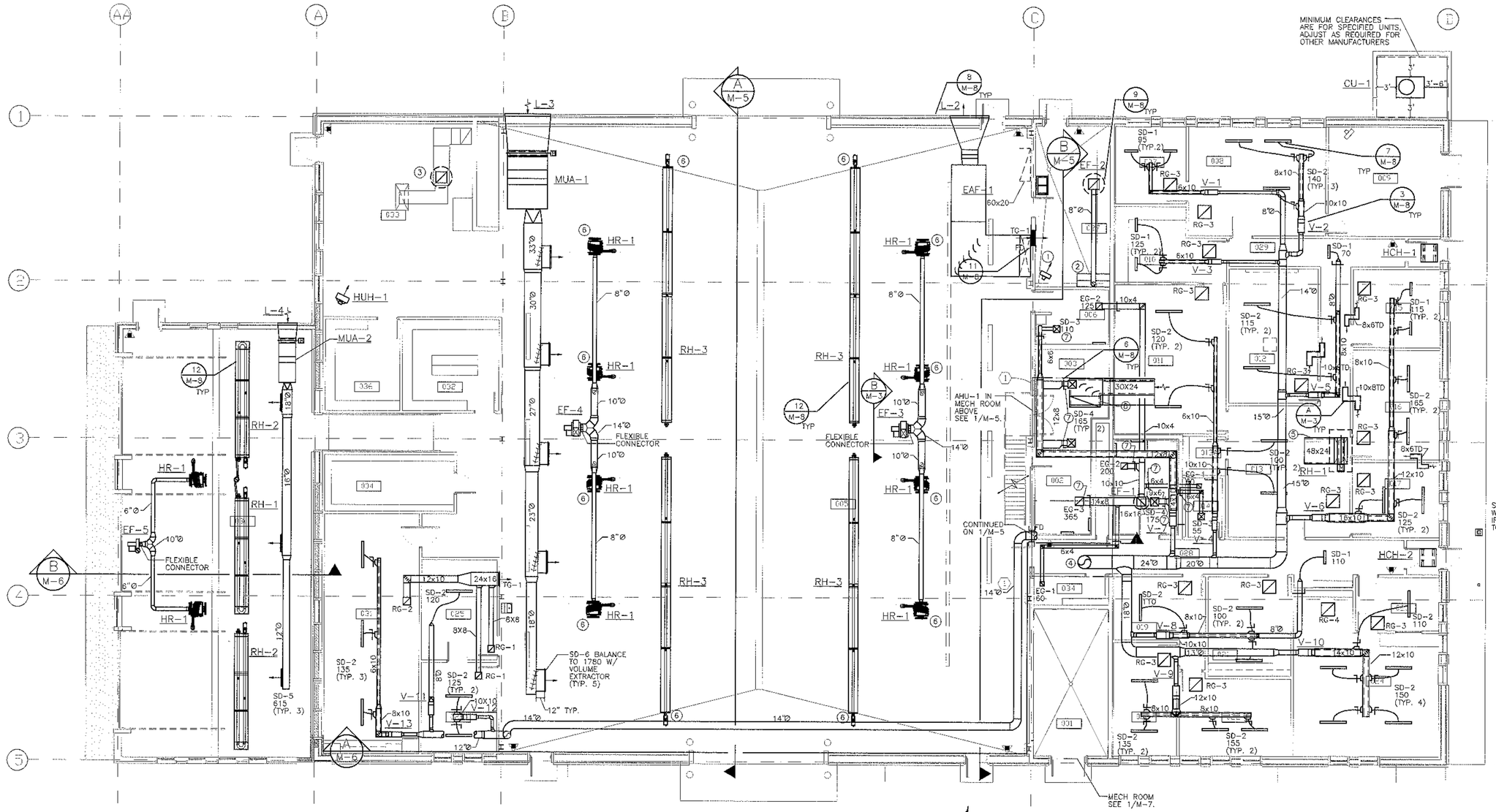

001	MECHANICAL ROOM
002	MENS TOILET
003	MENS LOCKER ROOM
004	BENCH STOCK
005	AUTO MAINTENACE ROOM
006	WOMENS LOCKER ROOM
007	LGTR OFFICER
008	LGTR NCOIC
009	MOBILITY STORAGE
010	COMPUTER TRAINING
011	QUALITY, SAFETY, & TRAINING
012	CONFERENCE ROOM
013	ADMINISTRATION
013A	ADMINISTRATION CLOSET
014	WOMENS TOILET
015	CCF OFFICE
016	CC OFFICE
017	CCQ OFFICE
018	MENS TOILET
019	LGTO ADMINISTRATION
020	LGTO NCOIC
021	BREAK ROOM
022	LGTO OFFICER
023	FLEET WAITING
024	FLEET MANAGEMENT
025	OFFICE
026	OFFICE
027	BATTERY ROOM
028	CORRIDOR
029	CORRIDOR
030	AUTOMOTIVE MAINTENANCE SHOP
031	MAINTENANCE BREAK ROOM
032	TOOL STORAGE
033	METALS SHOP
034	JANITOR
035	MECHANICAL ROOM ABOVE
036	LIBRARY

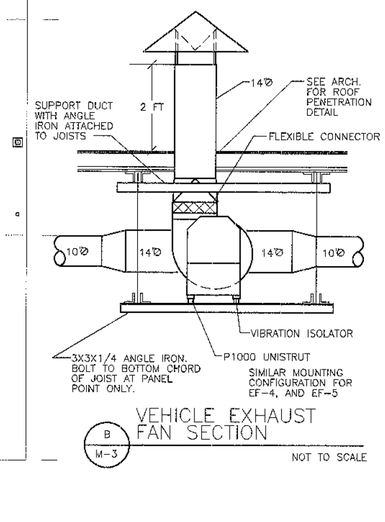

B/M-3 VEHICLE EXHAUST FAN SECTION

NOT TO SCALE

1/M-3 MECH REMODEL FLOOR PLAN

BUILDING #882 SCALE: 1/8" = 1'-0"

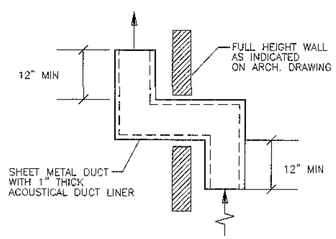

A/M-3 ACOUSTICAL TRANSFER DUCT DETAIL

NOT TO SCALE

HVAC PLAN NOTES:

1. RELOCATED HYDRONIC UNIT HEATER. CLEAN, VERIFY OPERATION AND REFURBISH AS REQUIRED.
2. RELOCATED BATTERY EXHAUST HOOD.
3. EXISTING EXHAUST FAN RELOCATED ON NEW ROOF. EXTEND AND MODIFY EXISTING DUCTWORK AS REQUIRED TO MAKE THE NECESSARY CONNECTION.
4. 24" RND SUPPLY AIR DUCT RISES UP INTO MECHANICAL ROOM ABOVE. CONTINUED ON 1/M-5.
5. 48X24 RELIEF AIR DUCT WITH ACOUSTIC DUCT LINER AND MOTORIZED DAMPER.
6. SUPPORT FROM ROOF JOISTS ACCORDING TO MANUFACTURER RECOMMENDED INSTALLATION INSTRUCTIONS.
7. VOLUME DAMPER LOCATED ABOVE A GYP. BOARD CEILING. A REMOTE MOUNTED VOLUME DAMPER IS REQUIRED. SEE DETAIL 6/M-8.
8. 56X20 UP TO AHU-1 LOCATED IN MECHANICAL PENTHOUSE. CONTINUED ON 1/M-5.

GENERAL PLAN NOTES:

A. ROUND SUPPLY DUCTWORK SERVING ADMINISTRATIVE AREA TO RUN WITHIN THE ROOF JOIST SPACE UNLESS NOTED OTHERWISE.

B. VAV TERMINALS AND SUPPLY DUCTWORK DOWNSTREAM OF VAV TERMINALS TO RUN TIGHT TO ROOF JOISTS.

C. ANY PENETRATIONS THROUGH WALLS THAT ARE FIRE RELATED WALL, PARTITION AND RACEWAYS BE IT EXISTING AFTER DEMOLITION OR INSTALLED DURING CONSTRUCTION SHALL BE "FIRESTOPPED" WITH THE APPROPRIATE UL RATED FIRESTOPPING MATERIAL.

D. ALL PENETRATIONS THROUGH WALLS, PARTITIONS AND RACEWAYS BE IT EXISTING AFTER DEMOLITION OR INSTALLED DURING CONSTRUCTION SHALL BE PROVIDED WITH AN EXPANDABLE FOAM FILLER.

AS BUILT

REV.	DATE	DESCRIPTION	DRAWN	APPR'D

SPACE COMMAND

MALMSTROM AIR FORCE BASE, MONTANA

DRAWN BY NITSCHKE	TRANSPORTATION FACILITY, BUILDING 882	PROJECT NUMBER NZAS 93-0107
DESIGNED BY NITSCHKE	MECH REMODEL FLOOR PLAN	ACAD DRAWING NUMBER 93107M03
REVIEWED BY BAKER	SCALE 1/8"=1'-0" DATE 17NOV97 PLATE M-3 PAGE 31 OF 44	RECORD FILE NUMBER

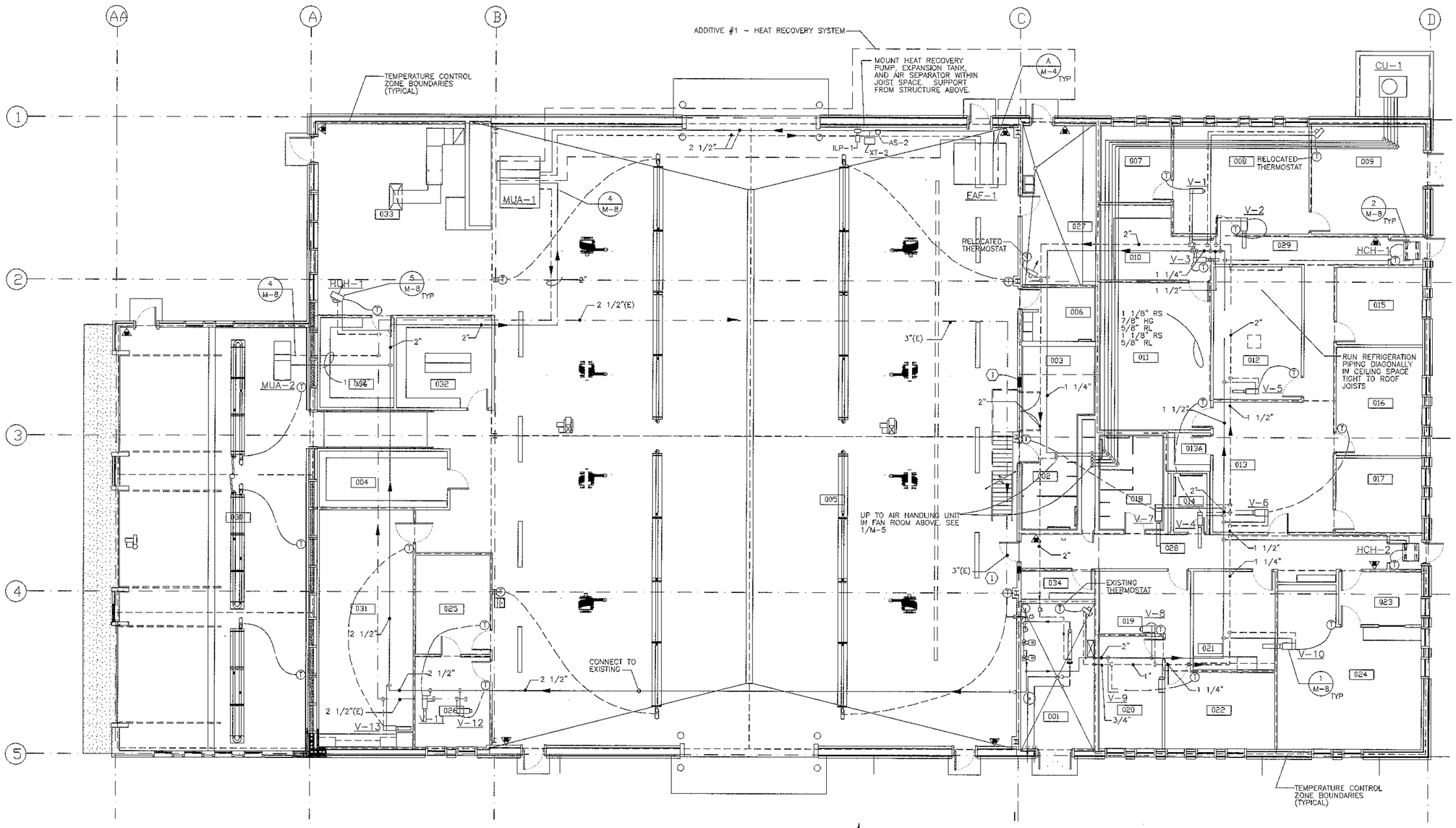

1/M-4 HYDRONIC PIPING PLAN
BUILDING #882 SCALE: 1/8" = 1'-0"

001	MECHANICAL ROOM
002	MENS TOILET
003	MENS LOCKER ROOM
004	BENCH STOCK
005	AUTO MAINTENACE ROOM
006	WOMENS LOCKER ROOM
007	LGTR OFFICER
008	LGTR NCOIC
009	MOBILITY STORAGE
010	COMPUTER TRAINING
011	QUALITY, SAFETY, & TRAINING
012	CONFERENCE ROOM
013	ADMINISTRATION
013A	ADMINISTRATION CLOSET
014	WOMENS TOILET
015	CCF OFFICE
016	CC OFFICE
017	CCQ OFFICE
018	MENS TOILET
019	LGTO ADMINISTRATION
020	LGTO NCOIC
021	BREAK ROOM
022	LGTO OFFICER
023	FLEET WAITING
024	FLEET MANAGEMENT
025	OFFICE
026	OFFICE
027	BATTERY ROOM
028	CORRIDOR
029	CORRIDOR
030	AUTOMOTIVE MAINTENANCE SHOP
031	MAINTENANCE BREAK ROOM
032	TOOL STORAGE
033	METALS SHOP
034	JANITOR
035	MECHANICAL ROOM ABOVE
036	LIBRARY

GENERAL PLAN NOTES:

(A) ANY PENETRATIONS THROUGH WALLS THAT ARE FIRE RELATED WALL, PARTITION AND RACEWAYS BE IT EXISTING AFTER DEMOLITION OR INSTALLED DURING CONSTRUCTION SHALL BE "FIRESTOPPED" WITH THE APPROPRIATE UL RATED FIRESTOPPING MATERIAL.

(B) ALL PENETRATIONS THROUGH WALLS, PARTITIONS AND RACEWAYS BE IT EXISTING AFTER DEMOLITION OR INSTALLED DURING CONSTRUCTION SHALL BE PROVIDED WITH AN EXPANDABLE FOAM FILLER.

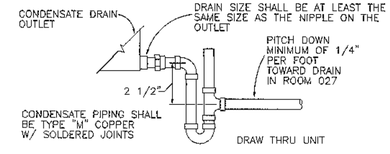

A/M-4 DRAIN TRAP DETAL
NTS

AS BUILT

REV.	DATE	DESCRIPTION	DRAWN	APPR'D

DRAWN BY NITSCHKE	TRANSPORTATION FACILITY, BUILDING 882	PROJECT NUMBER NZAS 93-0107
DESIGNED BY NITSCHKE	HYDRONIC PIPING PLAN	ACAD DRAWING NUMBER 93107M04
REVIEWED BY BAKER	SCALE 1/8"=1'-0" DATE 17NOV97 PLATE M-4 PAGE 32 OF 44	RECORD FILE NUMBER

SPACE COMMAND
MALMSTROM AIR FORCE BASE, MONTANA

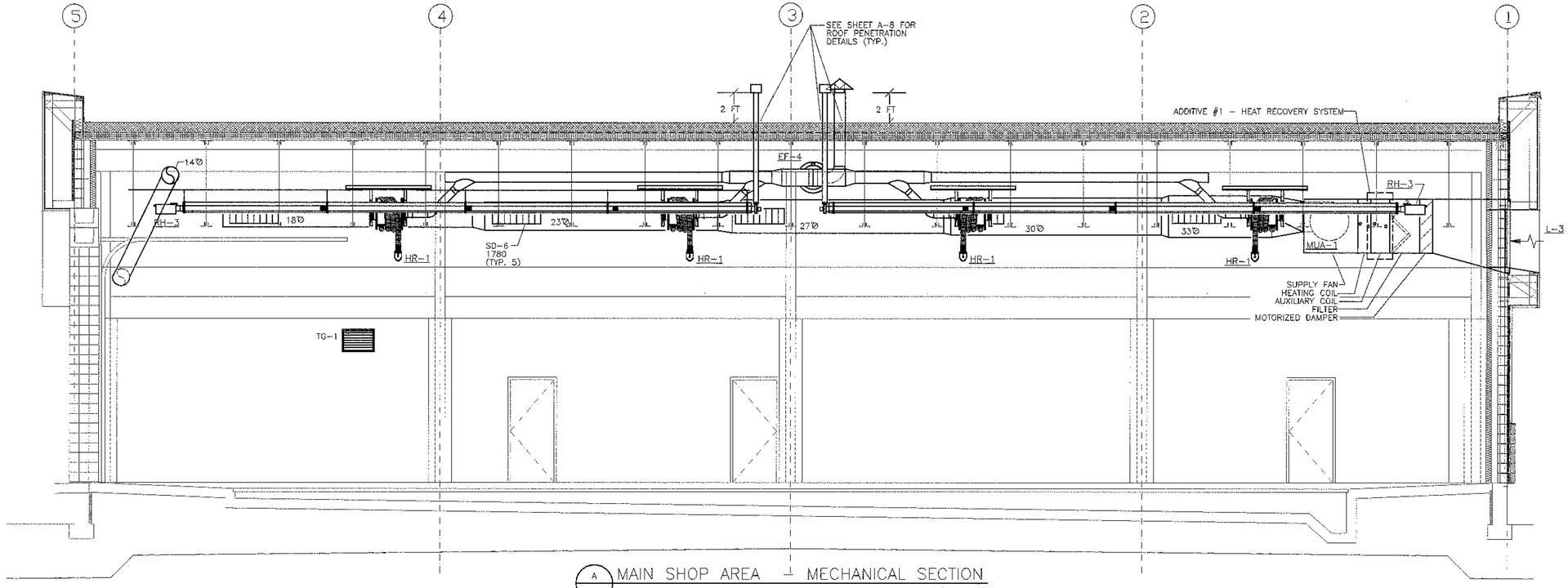

A M-5 MAIN SHOP AREA – MECHANICAL SECTION

SCALE: 1/4" = 1'-0"

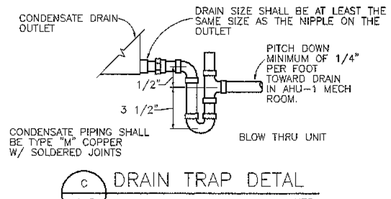

C M-5 DRAIN TRAP DETAL

NTS

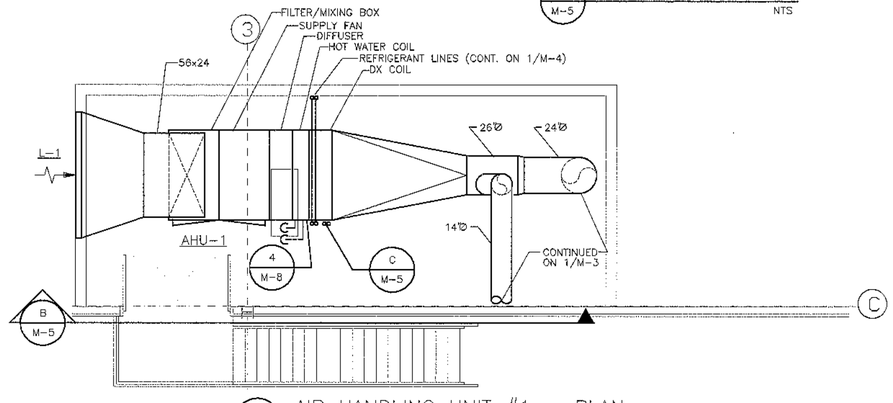

1 M-5 AIR HANDLING UNIT #1 – PLAN

BUILDING #882 SCALE: 1/4" = 1'-0" ROTATED 90°

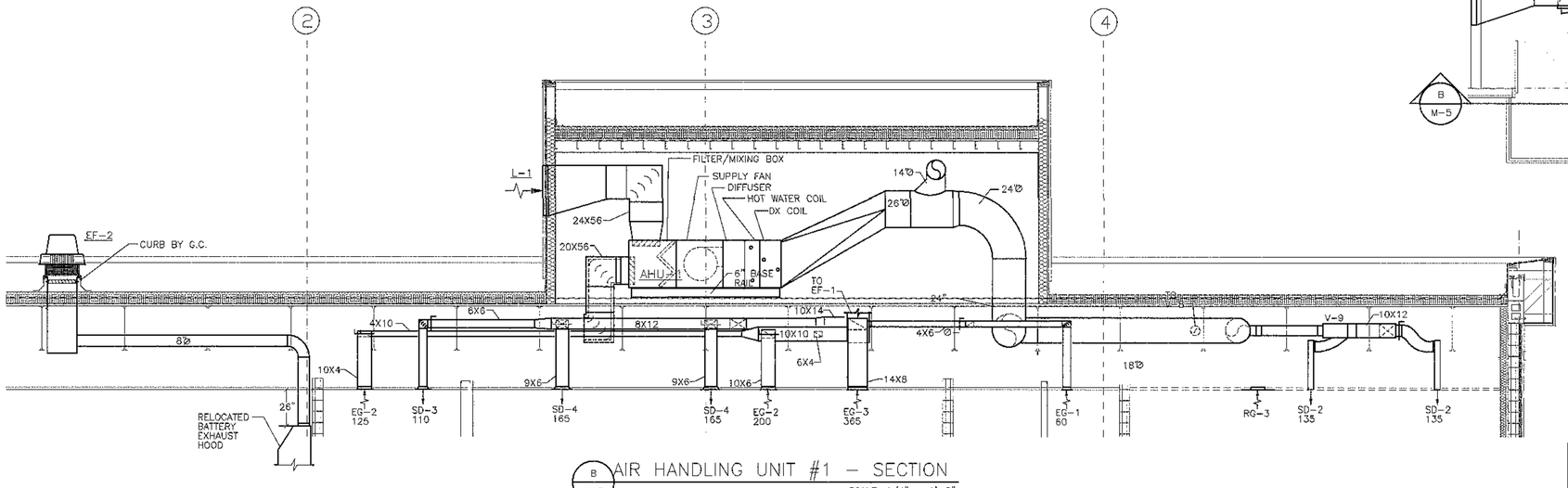

B M-5 AIR HANDLING UNIT #1 – SECTION

SCALE: 1/4" = 1'-0"

AS BUILT

REV.	DATE	DESCRIPTION	DRAWN	APPR'D

DRAWN BY NITSCHKE	TRANSPORTATION FACILITY, BUILDING 882	PROJECT NUMBER NZAS 93-0107
DESIGNED BY NITSCHKE	HVAC SECT. & ENLARGED PLANS	ACAD DRAWING NUMBER 93107M05
REVIEWED BY BAKER	SCALE 1/4"=1'-0" DATE 17NOV97 PLATE M-5 PAGE 33 OF 44	RECORD FILE NUMBER

SPACE COMMAND

MALMSTROM AIR FORCE BASE, MONTANA

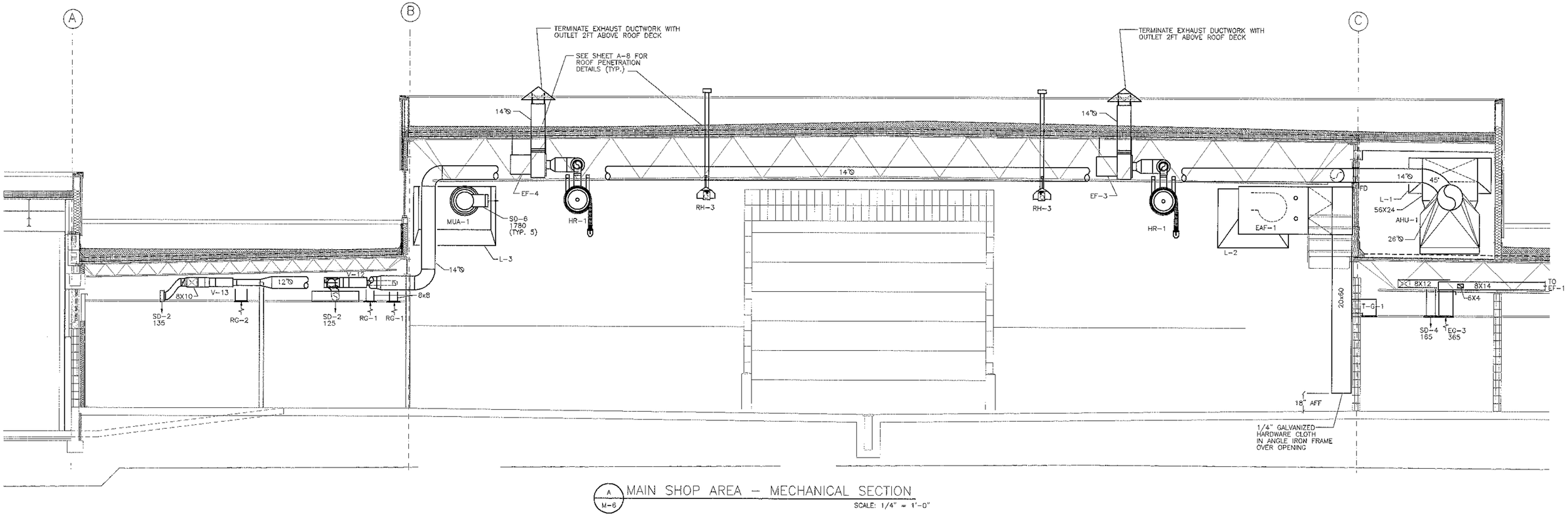

A / M-6 MAIN SHOP AREA – MECHANICAL SECTION

SCALE: 1/4" = 1'-0"

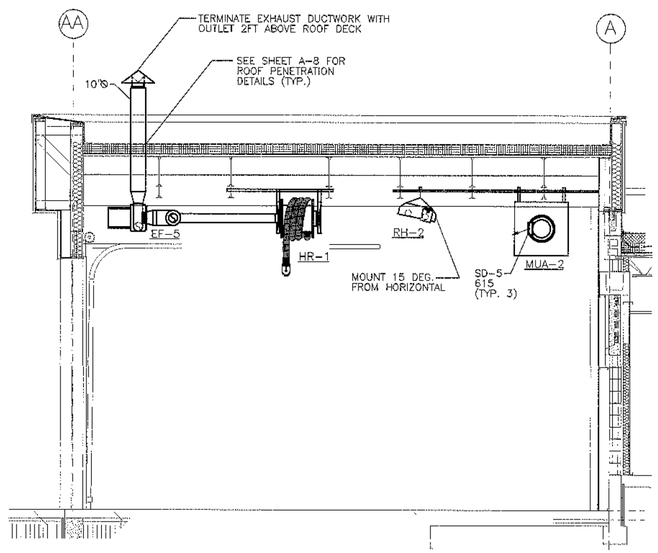

B / M-6 MAIN SHOP AREA – MECHANICAL SECTION

SCALE: 1/4" = 1'-0"

AS BUILT

REV.	DATE	DESCRIPTION	DRAWN	APPR'D

DRAWN BY NITSCHKE	TRANSPORTATION FACILITY, BUILDING 882	PROJECT NUMBER NZAS 93-0107
DESIGNED BY NITSCHKE	HVAC SECTIONS	ACAD DRAWING NUMBER 93107M06
REVIEWED BY BAKER	SCALE 1/4"=1'-0" DATE 17NOV97 PLATE M-6 PAGE 34 OF 44	RECORD FILE NUMBER

SPACE COMMAND

MALMSTROM AIR FORCE BASE, MONTANA

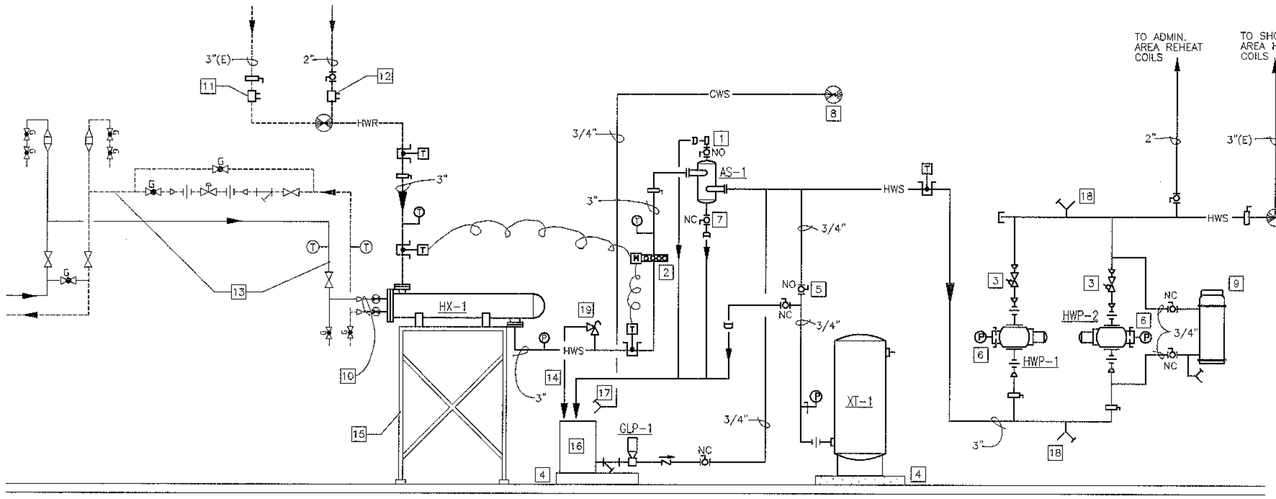

A M-7 HVAC FLOW DIAGRAM

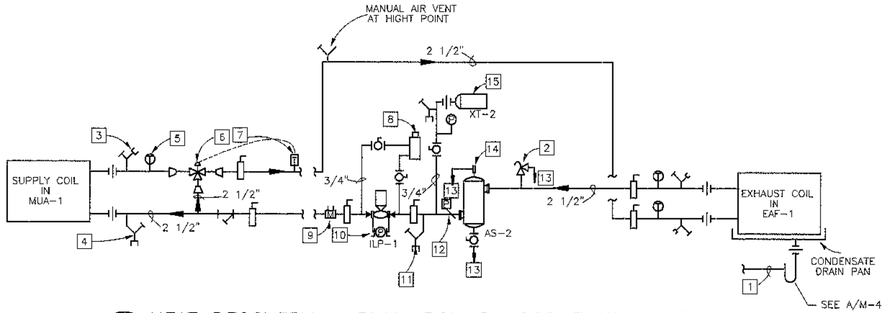

B M-7 HEAT RECOVERY – RUN AROUND LOOP FLOW DIAGRAM
ADDITIVE #1

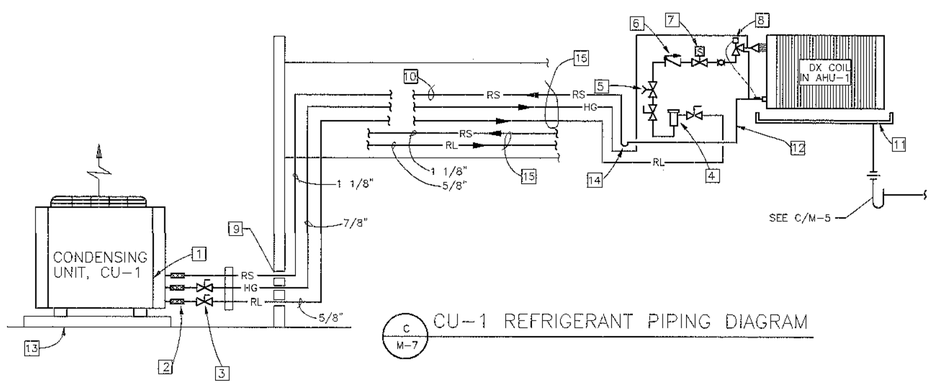

C M-7 CU-1 REFRIGERANT PIPING DIAGRAM

FLOW DIAGRAM NOTES:

1. AUTOMATIC AIR VENT WITH MINIMUM 3/8 " LINE TO DRAIN, USE BUILT–IN AIR ELIMINATOR CONNECTION.
2. BTU METER BY T.C.
3. TRIPLE DUTY VALVE, B & G 3DS–2 1/2S
4. 4" UNREINFORCED CONCRETE PAD.
5. TAG: "KEEP OPEN AT ALL TIMES."
6. DIAL PRESSURE GAUGE WITH 1/4 " COPPER CONNECTIONS & GAGE AND SNUBBER COCK IN EACH CONNECTION
7. MOUNT VALVE 5 FT. ABOVE FLOOR.
8. CW IS DOWNSTREAM OF BACKFLOW PREVENTION DEVICE.
9. 2–1/2 GALLON CHEMICAL FEEDER. DO NOT INSTALL TOP OF FEEDER MORE THAN 4'–0" ABOVE FLOOR. REMOTE MOUNT IF NECESSARY.
10. CONNECT NEW HEAT EXCHANGER TO EXISTING HIGH TEMPERATURE WATER SYSTEM.
11. INSTALL CIRCUIT SETTER IN EXISTING 3" HWR AND BALANCE TO 54.5 GPM.
12. INSTALL CIRCUIT SETTER IN 2" HWR AND BALANCE TO 33.5 GPM.
13. REMOVE AND REPLACE DAMAGED INSULATION AS REQUIRED ON MECHANICAL ROOM EXISTING PIPING TO REMAIN. THIS INSULATION HAS BEEN TESTED AND IS FREE OF ASBESTOS CONTAINING MATERIALS.
14. PIPE FULL SIZE TO GLYCOL CATCH BASIN.
15. REUSE EXISTING STAND. MODIFY AS REQUIRED FOR HX–1.
16. 20 GALLON POLYETHYLENE TANK WITH LID. CONTRACTOR SHALL ADD A SOLUTION OF PROPYLENE GLYCOL CAPABLE OF BURST PROTECTION DOWN TO –30 DEG F. AS FOLLOWS:
    - A. AFTER SYSTEM IS CLEANED AND FLUSHED, FILL SYSTEM WITH CLEAR WATER USING A WATER METER TO MEASURE TOTAL GALLONS.
    - B. DRAIN SYSTEM TOTALLY DOWN.
    - C. PRE–MIX GLYCOL AND WATER IN SEPARATE TANK AND FILL SYSTEM.
    - E. DISTILLED OR DEIONIZED WATER IS REQUIRED FOR INITIAL SYSTEM FILL BY GLYCOL MANUF.
17. HOSE BIBB WITH VACUUM BREAKER.
18. HOSE END VALVE FOR VENT OR DRAIN.
19. RELIEF VALVE, 36 PSIG, CAPACITY 1330 MBH, 1" INLET, 1" OUTLET, B&G MODEL 1170–36

FLOW DIAGRAM LEGEND

- 3/4" HOSE END DRAIN VALVE
- DIAL PRESSURE GAUGE
- DIAL THERMOMETER
- BUTTERFLY VALVE
- STRAINER
- BALL VALVE
- CHECK VALVE
- TEMPERATURE CONTROL WELL
- UNION
- P/T PLUG
- REDUCER
- CONNECT TO EXISTING
- NC NORMALLY CLOSED
- NO NORMALLY OPEN
- INSERTION FLOW METER
- SAFETY RELIEF VALVE
- CIRCUIT SETTER

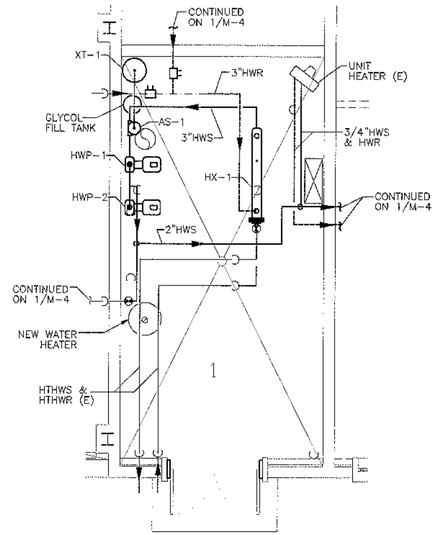

1 M-7 ENLARGED MECH. RM REMODEL PLAN

HEAT RECOVERY – RUN AROUND LOOP NOTES:

1. PIPE 1" CONDENSATE TO NEAREST FLOOR DRAIN.
2. 30 PSIG RELIEF VALVE.
3. MANUAL AIR VENT WITH THREAD HOSE–END CONNECTION TYPICAL.
4. 3/4" DRAIN VALVE WITH HOSE–END CONNECTION TYPICAL.
5. DIAL THERMOMETER WITH 0–100 DEG. F RANGE TYPICAL.
6. THREE–WAY FROST CONTROL VALVE, FURNISHED BY T.C. CONTRACTOR.
7. TEMPERATURE SENSOR FURNISH BY T.C. CONTRACTOR.
8. 2 1/2 GALLON CHEMICAL FEEDER WITH FILL CAP.
9. 2 1/2" CIRCUIT SETTER FOR FLOW MEASUREMENT, LEAVE WIDE OPEN.
10. 1/4" COPPER TUBES CONNECTED TO PUMP GAUGE PORTS WITH SHUT–OFF VALVES ON EACH SIDE OF PRESSURE GAUGE.
11. FILL SYSTEM WITH 35% PROPYLENE GLYCOL SOLUTION AND 65% DISTILLED OR DEIONIZED WATER PRESSURIZE TO 12 PSIG.
12. PRESSURE SWITCH WIRED TO STOP PUMP WHEN SYSTEM PRESSURE DROPS BELOW 5 PSIG.
13. PIPE BLOW DOWN, RELIEF VALVE, AND AIR VENT DISCHARGE LINES TO 5 GALLON DRUM TO CATCH GLYCOL SOLUTION.
14. INDUSTRIAL AIR VENT.
15. SUSPEND EXPANSION TANK FROM STRUCTURE.

CU–1 REFRIGERANT PIPING DIAGRAM NOTES:

1. INSTALL HOT–GAS BY–PASS KIT PER MANUFACTURERS INSTALLATION INSTRUCTIONS.
2. BRAIDED FLEXIBLE CONNECTORS
3. REFRIGERANT SHUT–OFF VALVE, TYP.
4. FILTER / DRYER WITH SHUT–OFF VALVES
5. REFRIGERANT CHARGING VALVE
6. CHECK VALVE ON LIQUID LINE.
7. SOLENOID VALVE WIRED BY T.C.
8. EXPANSION VALVE
9. SLEEVE THRU WALL SEAL WEATHERTIGHT WITH SILICONE SEALANT
10. FLEXIBLE ELASTOMERIC INSULATION ON SUCTION LINE
11. INSULATED CONDENSATE PAN IN AHU–1, PIPE 1" DIA. OUTLET WITH P–TRAP TO FLOOR DRAIN. SEE DETAIL 11/M–8.
12. SLOPE SUCTION LINE DOWN TOWARD CONDENSING UNIT.
13. 4" CONCRETE PAD BY G.C.
14. OIL TRAP.
15. CONDENSING UNIT HAS TWO COMPRESSORS AND REQUIRES TWO LINE SETS.

AS BUILT

REV.	DATE	DESCRIPTION	DRAWN	APPR'D

DRAWN BY NITSCHKE | DESIGNED BY NITSCHKE | REVIEWED BY BAKER

TRANSPORTATION FACILITY, BUILDING 882

FLOW DIAGRAMS & ENLARGED MECH. PLANS

SCALE 1/4"=1' | DATE 17NOV97 | PLATE M-7 | PAGE 35 OF 44

PROJECT NUMBER NZAS 93–0107

ACAD DRAWING NUMBER D:\MALMSOO\GL00583 877MA1M07

RECORD FILE NUMBER

SPACE COMMAND
MALMSTROM AIR FORCE BASE, MONTANA

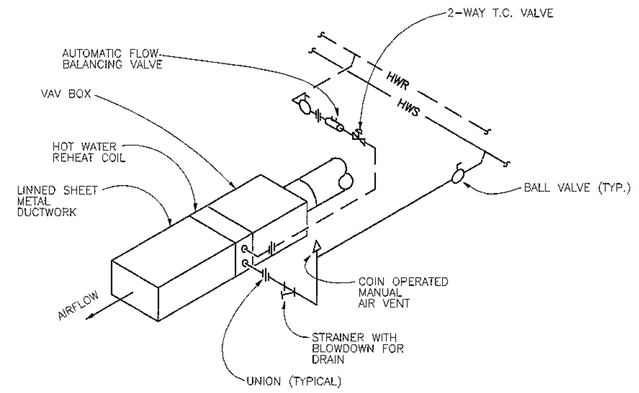

1 M-8 VAV REHEAT/DUCT COIL PIPING DETAIL
NOT TO SCALE

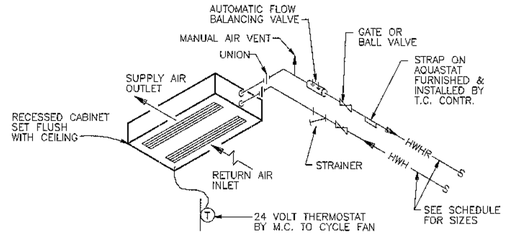

2 M-8 HOR. CABINET HEATER INSTALLATION
NTS

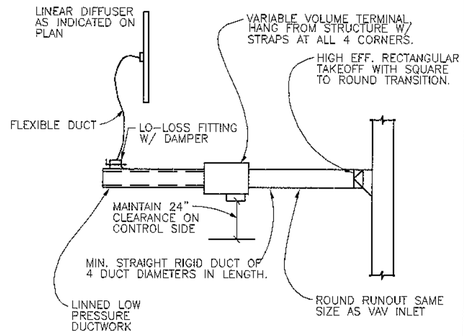

3 M-8 VAV TERMINAL DETAIL
NOT TO SCALE

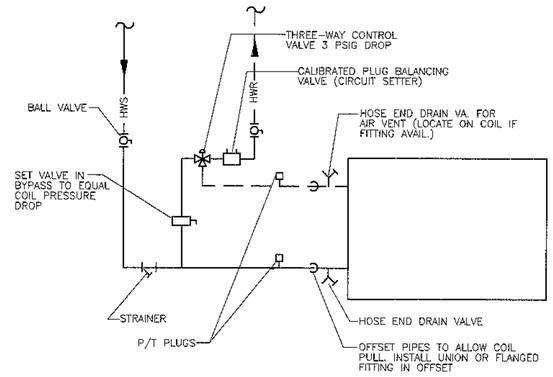

4 M-8 AHU HEATING COIL PIPING DETAIL
NTS

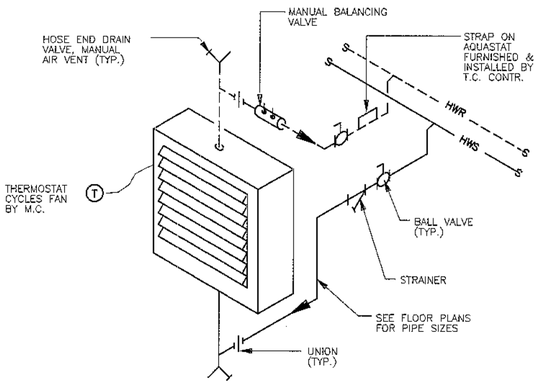

5 M-8 UNIT HEATER DETAIL
NOT TO SCALE

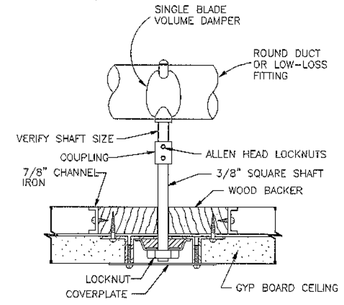

6 M-8 REMOTE DAMPER OPERATOR DETAIL
NTS

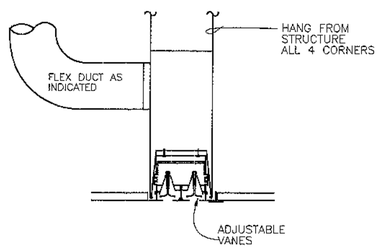

7 M-8 LINEAR DIFFUSER IN LAY-IN CEILING
NOT TO SCALE

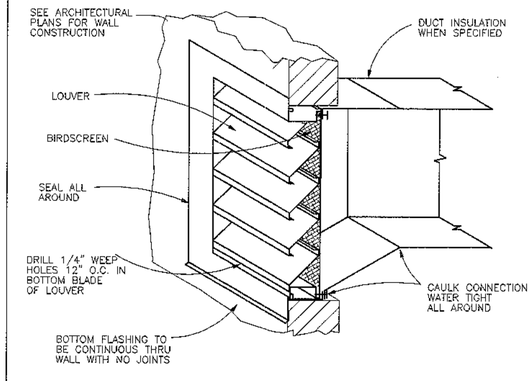

8 M-8 LOUVER DETAIL
NTS

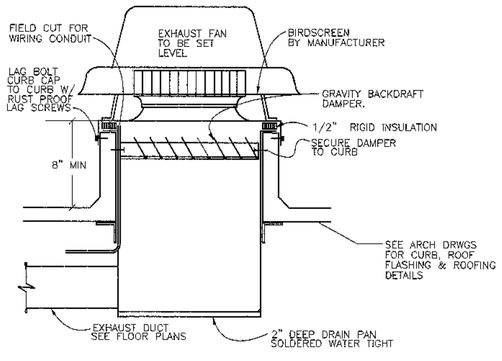

9 M-8 ROOF MOUNT EXHAUST FAN
NOT TO SCALE

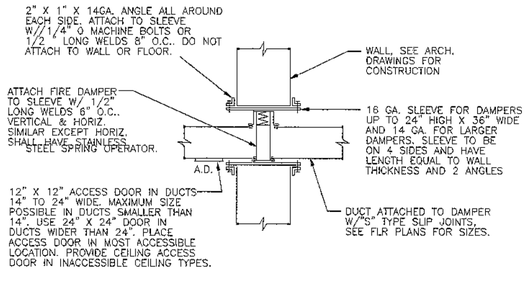

10 M-8 FIRE DAMPER DETAIL
NTS

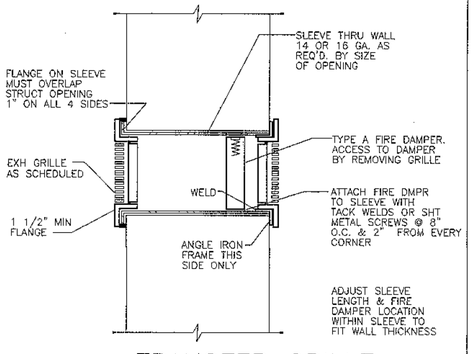

11 M-8 TRANSFER GRILLE W/ FIRE DAMPER
NTS

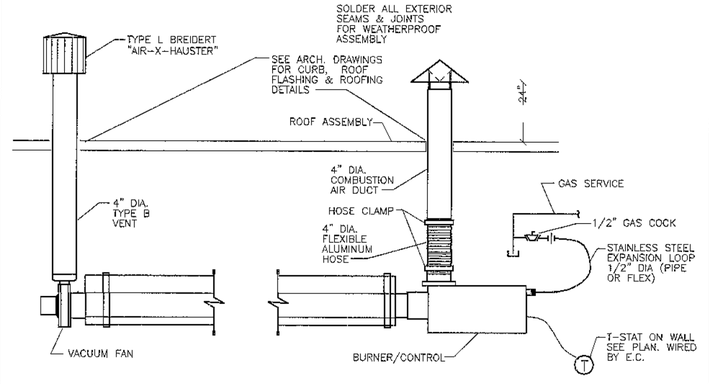

12 M-8 RADIANT HEATER INSTALLATION DETAIL
NOT TO SCALE

AS BUILT

REV.	DATE	DESCRIPTION	DRAWN	APPR'D

SPACE COMMAND
MALMSTROM AIR FORCE BASE, MONTANA

DRAWN BY NITSCHKE	TRANSPORTATION FACILITY, BUILDING 882	PROJECT NUMBER NZAS 93-0107
DESIGNED BY NITSCHKE	HVAC DETAILS	ACAD DRAWING NUMBER 93107M08
REVIEWED BY BAKER	SCALE 1/8"=1'-0" DATE 17NOV97 PLATE M-8 PAGE 36 OF 44	RECORD FILE NUMBER

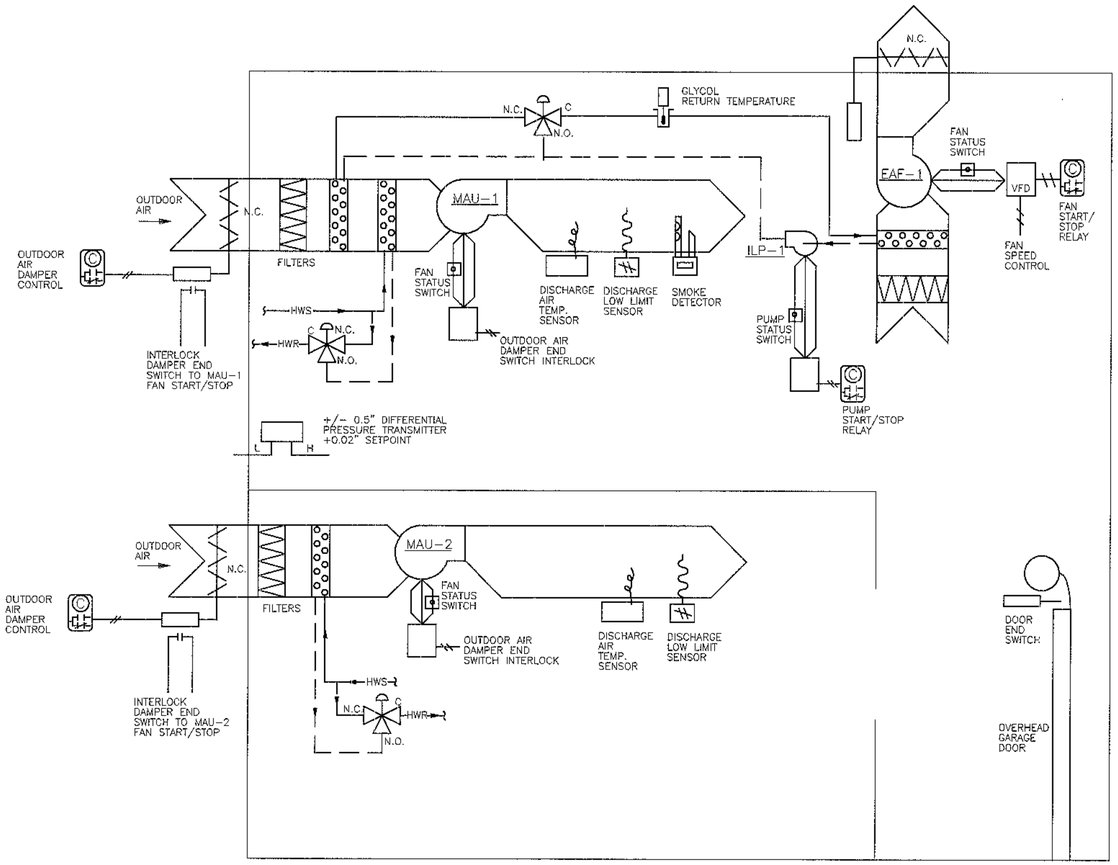

DDC LEGEND

- SMOKE DETECTOR
- M — CONTROL DAMPER ACTUATOR
- CONTROL RELAY
- CURRENT-SENSING STATUS SWITCH
- C / NC / NO — 3-WAY CONTROL VALVE (NORMALLY OPEN, NORMALLY CLOSED & COMMON PORTS INDICATED)
- NO — 2-WAY CONTROL VALVE, (NORMALLY OPEN INDICATED)
- AVERAGING TEMPERATURE SENSOR
- OUTDOOR TEMPERATURE SENSOR
- WELL TEMPERATURE SENSOR
- T — ROOM TEMPERATURE SENSOR
- LOW LIMIT TEMPERATURE SWITCH
- L H — DIFFERENTIAL PRESSURE TRANSMITTER
- VELOCITY SENSOR (THERMAL ANEMOMETER)
- N.C. NORMALLY CLOSED VALVE OR DAMPER
- N.O. NORMALLY OPEN VALVE OR DAMPER
- C COMMON

		INPUT TO EMCS: DIGITAL INPUT: PULSE	END SWITCH	AUX. CONTACT	ALARM CONTACT	PRESSURE SWITCH (PRESS. / DIFF. PRESS.)	TEMPERATURE SWITCH	VOLTAGE SENSING RELAY	CURRENT SENSING SWITCH	ANALOG INPUT: POSITION FEEDBACK	4-20 MA INPUT	0-10 VDC INPUT	TEMPERATURE SENSOR	PRESSURE SENSOR (PRESS. / DIFF. PRESSURE)	HUMIDITY SENSOR	OUTPUT FROM EMCS: DIGITAL OUT: MOMENTARY	MAINTAINED	ANALOG OUT: 4-20 MA OUTPUT	0-10 VDC OUTPUT	CONTROL PT. ADJUST/ POSITION ADJUST: INCR. BO/ 4-20 MA/ 0-10VDC WITH FEEDBACK (CLOSED LOOP)	INCR. BO/ 4-20 MA / 0-10VDC WITHOUT FEEDBACK (OPEN LOOP)
NOTES	POINT DESCRIPTION																				
	AHU-1																				
	SUPPLY FAN START/STOP																X				
	SUPPLY FAN STATUS								X												
	EF-1 START/ STOP																X				
	EF-1 STATUS								X												
	SUPPLY SMOKE DETECTOR (BY E.C.)			X																	
	DISCH. LOW LIMIT (MANUAL RESET)			X																	
	OUTDOOR AIR TEMPERATURE												X								
	MIXED AIR TEMPERATURE												X								
	DISCHARGE AIR TEMPERATURE												X								
	RETURN AIR TEMPERATURE												X								
	DUCT STATIC PRESSURE													X							
	SUPPLY FAN VFD CONTROL																		X		
	MIXING DAMPER CONTROL																			X	
	RELIEF DAMPER CONTROL (RH-1)																			X	
	HEATING VALVE CONTROL																			X	
	DX COOLING CONTROL (2 COMP.)																X				
	ZONE CONTROL (TYPICAL)																				
	DAMPER OPERATOR																				X
	VELOCITY SENSOR											X									
	DUCT COIL VALVE																				X
	ROOM SENSOR/SETPT/UNOCC OVERRIDE		X						X		X										
	EAF-1																				
	EXHAUST FAN START/STOP																X				
	EXHAUST FAN STATUS								X												
2.	GLYCOL PUMP ILP-1 START/STOP																X				
2.	GLYCOL PUMP ILP-1 STATUS								X												
	GARAGE DOOR END SWITCH		X																		
	EXHAUST FAN VFD CONTROL																		X		
	DISCHARGE SHUT-OFF DAMPER																X				
2.	HEAT RECOVERY VALVE CONTROL																				X
2.	GLYCOL RETURN TEMPERATURE												X								
	MAU-1, 2 (TYPICAL)																				
	SUPPLY FAN START/STOP																X				
	SUPPLY FAN STATUS								X												
1.	SUPPLY SMOKE DETECTOR (BY E.C.)			X																	
	DISCH. LOW LIMIT (MANUAL RESET)			X																	
	DISCHARGE AIR TEMPERATURE												X								
	HEATING VALVE CONTROL																				X
	OUTDOOR AIR SHUT-OFF DAMPER																X				
	DIFFERENTIAL PRESSURE													X							
	HEATING CONTROL																				
	HWP-1 START/STOP																X				
	HWP-2 START/STOP																X				
	HWP-1 STATUS				X																
	HWP-2 STATUS				X																
	HOT WATER SUPPLY TEMPERATURE												X								
	HOT WATER RETURN TEMPERATURE												X								
	HIGH TEMP. HOT WATER VALVE CONTROL																				X
	UTILITY INTERFACE																				
	ELECTRIC PULSE METER (KW/KWH)	X																			
	GAS PULSE METER	X																			
	BASE HWS BTU USEAGE METER	X																			

1. SMOKE DETECTOR REQUIRED FOR MAU-1 ONLY
2. ADDITIVE #1

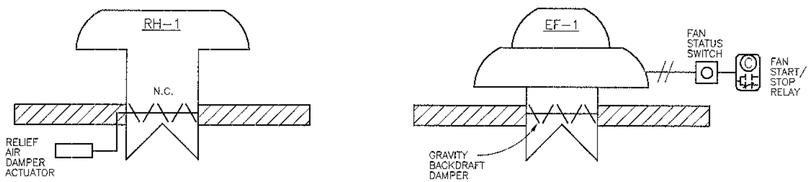

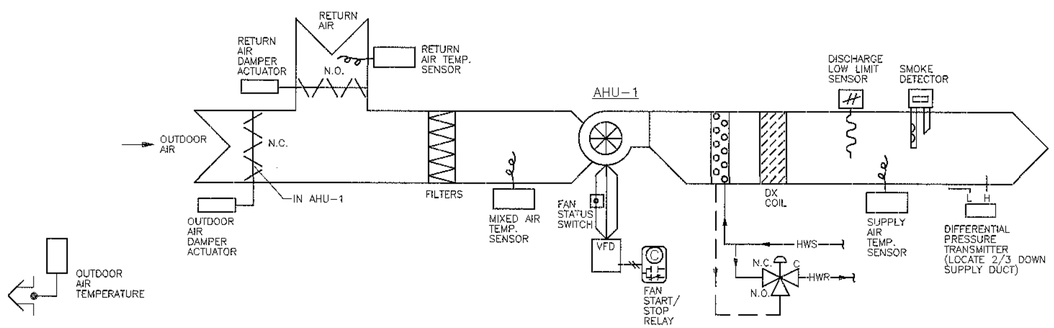

TYPICAL ZONE CONTROL

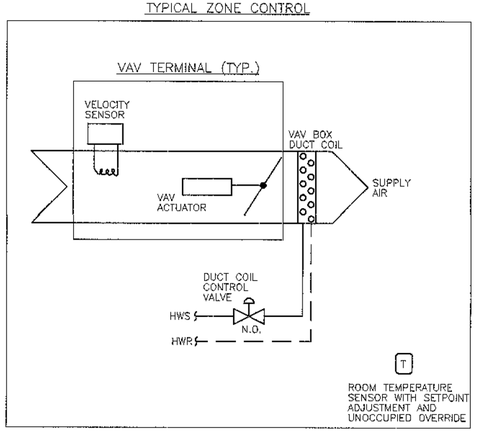

AS BUILT

REV.	DATE	DESCRIPTION	DRAWN	APPR'D

SPACE COMMAND

MALMSTROM AIR FORCE BASE, MONTANA

DRAWN BY BEAUDRY	TRANSPORTATION FACILITY, BUILDING 882	PROJECT NUMBER	NZAS 93-0107
DESIGNED BY BEAUDRY	TEMP. CONTROL SCHEMATIC DIAG.	ACAD DRAWING NUMBER (S:\MECH\M09\93M09)	93107M09
REVIEWED BY BAKER	SCALE NOT TO SCALE / DATE 17NOV97 / PLATE M-9 / PAGE 37 OF 44	RECORD FILE NUMBER	93901M11

PLUMBING LEGEND

SYMBOL	DESCRIPTION
SCW	DOMESTIC SOFT COLD WATER
CW	DOMESTIC COLD WATER
HW	DOMESTIC HOT WATER
HWC	DOMESTIC HOT WATER RECIRC.
W	WASTE
V	VENT
CO	CLEAN OUT
FCO	FLOOR CLEAN OUT
GCO	GRADE CLEAN OUT
WCO	WALL CLEAN OUT
CD	CONDENSATE DRAIN
D	DRAIN
F	FIRE SERVICE
NG	NATURAL GAS
RWL	RAIN WATER LEADER
OFL	OVERFLOW RAIN LEADER
HWS	HEATING WATER SUPPLY
HWR	HEATING WATER RETURN
CWS	CHILLED WATER SUPPLY
CWR	CHILLED WATER RETURN
LPS	LOW PRESSURE STEAM SUPPLY
LPR	LOW PRESSURE STEAM RETURN
DT	DRAIN TILE
	SLOPE DOWN IN DIRECTION OF ARROW
	GATE VALVE
	BALL VALVE
	BUTTERFLY VALVE
	TRIPLE DUTY VALVE

SYMBOL	DESCRIPTION
	SWING CHECK VALVE
	STRAINER
	WATER OUTLET (TYPE INDICATED)
	BACKFLOW PREVENTOR (TYPE INDICATED)
	SLEEVE (PIPE) THRU WALL OR FLOOR
	FLEX CONNECTOR (TYPE INDICATED)
	HOSE END DRAIN VALVE
	PRESSURE REDUCING VA.
	TEMP. & PRESSURE RELIEF VALVE
	AUTOMATIC AIR VENT
DE	DIELECTRIC WATERWAY
	UNION
	MANUAL FLOW BALANCING VA
A	AUTOMATIC FLOW BALANCING VA
T	DIAL THERMOMETER
P	PRESSURE GAUGE - PROVIDE WITH PIGTAIL FOR STEAM
	PIPE ANCHOR
	MOTORIZED T.C. VA/2-WAY
	MOTORIZED T.C. VA/3-WAY
	VALVE IN RISER
	TEE UP
	TEE DOWN
	ELBOW UP
	ELBOW DOWN
	PIPE CAP
	NEW PIPING
	EXISTING PIPING
	PIPING TO BE REMOVED

ABBREVIATION	DESCRIPTION		
AFF	ABOVE FINISHED FLOOR	MIN.	MINIMUM
BFF	BELOW FINISHED FLOOR	N.C.	NORMALLY CLOSED (VALVE)
C.I.	CAST IRON	N.O.	NORMALLY OPEN (VALVE)
CD	CONDENSATE DRAIN	OFL	OVERFLOW RAIN LEADER
CO	CLEANOUT	POC	POINT OF CONNECTION
CW	COLD WATER	RWL	RAIN WATER LEADER
CX	CONNECT TO EXISTING	TPL	TRAP PRIMER LINE
DN	PIPE DROP TO NEXT LEVEL	UG	UNDERGROUND
DTL.	DETAIL	V	VENT
(E)	EXISTING	VA	VALVE
HW	HOT WATER	VTR	VENT THRU ROOF
HWC	HOT WATER CIRCULATION	W	WASTE
MAX.	MAXIMUM	WCO	WALL CLEANOUT

PLUMBING FIXTURE CONNECTION SCHEDULE

MINIMUM CONNECTION SIZES UNLESS INDICATED OTHERWISE ON PLANS

SYMBOL	DESCRIPTION	ROUGH-IN SIZE WASTE	VENT	CW	HW	REMARKS
WC-1	WATER CLOSET	4	2	1/2	--	FMFT
U-1	URINAL	2	1-1/2	3/4	--	WALL HUNG
L-1	LAVATORY	1-1/2	1-1/4	1/2	1/2	COUNTERTOP
L-2	LAVATORY	1-1/2	1-1/4	1/2	1/2	WALL HUNG
S-1	SINK	4	2	1/2	1/2	1 COMPARTMENT
MSK-1	MOP SINK	3	2	3/4	3/4	FLOOR SINK
EWC-1	ELEC. WATER COOLER	1-1/2	1-1/4	1/2	--	1 COMPARTMENT
HB-1	HOSE BIBB	--	--	3/4	--	
WH-1	WALL HYDRANT	--	--	3/4	--	
FD-1	FLOOR DRAIN	2	1-1/2	--	--	

PLUMBING FIXTURE SCHEDULE

ALL PLUMBING FIXTURES SHALL BE IN ACCORDANCE WITH APPLICABLE SPECIFICATIONS AND BE OF SIZE AND TYPE INDICATED. EACH SHALL BE OF MAKE AND MODEL LISTED OR EQUAL.

WC-1 WATER CLOSET
- TYPE: FLOOR MOUNTED, SIPHON JET, ELONGATED BOWL 1.6 GPF, VITREOUS CHINA, COLOR WHITE
- MFGR: KOHLER NO. K-4368
- SEAT: SOLID PLASTIC, OPEN FRONT, CHECK HINGE, ELONGATED, BEMIS 1955C

U-1 URINAL
- TYPE: WALL HUNG, FLUSH VALVE, VITREOUS SIPHON JET, 1.0 GPF, 3/4" TOP SPUD
- MFGR: KOHLER-NO. 4989-T
- FLUSH VALVE: SLOAN 186-1-YB, 1.0 GPF
- CARRIER: JAY R. SMITH 636

L-1 LAVATORY
- TYPE: COUNTERTOP OVAL, 20" X 17", 4" CENTERS, VITREOUS CHINA, COLOR WHITE
- MFGR: KOHLER NO. K-2196
- FAUCET: KOHLER K-7404 K HANDLE, 2.2 GPM AERATOR. THREADED CONNECTORS
- SUPPLIES: POLISHED CHROME, LOOSE KEY STOPS, 3/8" BRAIDED STAINLESS STEEL SUPPLY CONNECTORS, WALL FLANGE
- DRAIN: GRID STRAINER PROVIDED WITH FAUCET
- TRAP: 1-1/2" X 1-1/4" 17 GA. TUBULAR ADJUSTABLE CHROME PLATED P-TRAP WITH WALL FLANGE

L-2 LAVATORY
- TYPE: WALL HUNG, 18" X 16", 4" CENTERS, VITREOUS CHINA, COLOR WHITE
- MFGR: KOHLER K-2027
- FAUCET: KOHLER K-7404K K HANDLE, 2.2 GPM AERATOR. THREADED CONNECTORS
- SUPPLIES: POLISHED CHROME, LOOSE KEY STOPS, 3/8" BRAIDED STAINLESS STEEL SUPPLY CONNECTORS, WALL FLANGE
- DRAIN: GRID STRAINER PROVIDED WITH FAUCET
- TRAP: 1-1/2" X 1-1/4" 17 GA. TUBULAR ADJUSTABLE CHROME PLATED P-TRAP WITH WALL FLANGE
- CARRIER: PROVIDED BY LAV MFGR.

S-1 SINK
- TYPE: COUNTERTOP SINGLE COMPARTMENT, 18" X 15" X 7-1/2", 3 HOLE, 18 GA., TYPE 302 STAINLESS STEEL, 8" CENTERS
- MFGR: JUST SL-1815-A-GR
- FAUCET: DELTA 2476 LHP HANDLE, 2.5 GPM AERATOR. THREADED CONNECTORS
- SUPPLIES: 1/2" WHEEL HANDLE ANGLE STOPS, 1/2" BRAIDED STAINLESS STEEL SUPPLY CONNECTORS, WALL FLANGE
- DRAIN: BASKET STRAINER WITH TAILPIECE, JUST J-35GSSTP
- TRAP: 1-1/2" 17 GA. TUBULAR CHROME PLATED P-TRAP AND WALL FLANGE

MSK-1 MOP SINK
- TYPE: FLOOR MOUNTED DURASTONE, 24" X 24", BUMPER GUARD, HOSE BRACKET AND MOP HANGER
- MFGR: MUSTEE MODEL 63P
- FAUCET: KOHLER K-8908, PAIL HOOK VACUUM BREAKER SPOUT
- DRAIN: PROVIDED BY SINK MFGR.
- TRAP: 3" SCHED. 40 PVC P-TRAP
- MOUNTING: MOUNT FAUCET 30" ABOVE FLOOR

EWC-1 ELECTRIC WATER COOLER
- TYPE: WALL HUNG LEAD FREE WITH CAPACITY OF 4.8 GPH OF 50DEG. F. WATER WITH 80 DEG. F. INLET WATER AND 90 DEG. F. ROOM TEMPERATURES, 1/6 HP, 120 V.
- MFGR: ELKAY MODEL EBFSA-4
- SUPPLIES: POLISHED CHROME LOOSE KEY STOPS, 3/8" BRAIDED STAINLESS STEEL SUPPLY CONNECTORS, WALL FLANGE
- TRAP: 1-1/2" X 1-1/4" 17 GA. TUBULAR CHROME PLATED P-TRAP AND WALL FLANGE

HB-1 HOSE BIBB
- TYPE: ANTI-CONTAMINATION SOLID BRASS, WITH VACUUM BREAKER AND WHEEL HANDLE
- MFGR: WOODFORD MODEL 24, 3/4" INLET

WH-1 WALL HYDRANT
- TYPE: AUTOMATIC DRAINING, CHROME FINISH, LOOSE KEY 3/4" MALE HOSE THREAD, 3/4" INLET, VACUUM BREAKER
- MFGR: WOODFORD MODEL 65
- NOTE: LENGTH OF VALVE TO REACH NON-FREEZING AREA

FD-1 FLOOR DRAIN
- TYPE: 12" X 12" CAST IRON NON-TRAFIC BAR GRATE, CAST IRON BODY WITH FLANGE, SIZE 2"
- MFGR: JAY R. SMITH 2632Y-F

TD-1 TRENCH DRAIN
- TYPE: 4" WIDE PRE-CAST POLYMERE CONCRETE SLOPED CHANNEL DRAIN. REINFORCED EDGE PROTECTION
- MFGR: JAY R. SMITH ACO 9818 SERIES
- GRATE: SERIES 9870-460 SLOTTED CAST IRON
- NOTE: CHANNEL NUMBER STARTS AT 100S-1, AND ENDS AS REQUIRED FOR LENGTH INDICATED ON DRAWINGS. DEEPEST CHANNEL HAS BOTTOM END OUTLET

FCO FLOOR CLEANOUT
- TYPE: CAST IRON HEAVY DUTY CLEANOUT WITH SQUARE SCORIATED NICKEL BRONZE TOP AND BRONZE PLUG. NO-HUB OUTLET
- MFGR: JAY R. SMITH 4041

WCO WALL CLEANOUT
- TYPE: BRONZE THREAD COUNTERSUNK PLUG WITH STAINLESS STEEL COVER AND SCREW
- MFGR: JAY R. SMITH 4472. FULL SIZE OF CONNECTING PIPE

PLAN CODE	MFGR,	WATER HAMMER ARRESTORS MODEL	PDI SYMBOL	PIPE SIZE
SA-1	SIOUX CHIEF	652-A	A	1/2"
SA-2	SIOUX CHIEF	653-B	B	3/4"
SA-3	SIOUX CHIEF	654-C	C	1"
SA-4	SIOUX CHIEF	654-D	D	1"

PLUMBING EQUIPMENT SCHEDULE

ALL PLUMBING EQUIPMENT SHALL BE IN ACCORDANCE WITH APPLICABLE SPECIFICATIONS AND BE OF SIZE AND TYPE INDICATED. EACH SHALL BE OF MAKE AND MODEL LISTED OR EQUAL.

RPBFP-1 REDUCED PRESSURE BACKFLOW PREVENTOR
- TYPE: BRONZE BODY, BRONZE BALL VALVE SHUT-OFF ASSE 1013, AWWA STD. C511-89 TESTED AND IAPMO LISTED. PROVIDE W/AIR GAP FITTING (AGF)
- MFGR: WATTS NO. 009M1QT-2"

HWH-1 HOT WATER HEATER
- TYPE: NATURAL GAS, GLASS LINED TANK, 40 GAL. 34,000 BTU/HR INPUT. SET AT 120 DEG. F.
- MFGR: A.O. SMITH FSG-46

ET-1 EXPANSION TANK - DOMESTIC WATER
- TYPE: PRE-PRESSURIZED DIAPHRAM TYPE, POTABLE WATER
- MFGR: X-TROL ST-12

AC-1 AIR COMPRESSOR
- TYPE: TWO-STAGE, HORIZONTAL TANK MOUNTED, 120 GAL. TANK. SPLASH LUBRICATED, RECIPROCATING. 10 HP, 34.8 CFM DELIVERY
- MFGR: CHAMPION HR10-12

CAR COMPRESSED AIR REGULATOR/FILTER
- TYPE: NON-RISING ADJUSTMENT KNOB, 0 - 250 PSI ADJUSTMENT RANGE. HIGH PRESSURE SPRING, STANDARD PRESSURE GAUGE. 5 MICRON FILTER IN METAL BOWL
- MFGR: WILKERSON MODEL C06
- OPTIONS: WALL MOUNTING BRACKET

HR HOSE REEL
- TYPE: HEAVY DUTY STEEL, OPEN TYPE HOSE ASSEMBLY. HOSE ASSEMBLY CONSISTS OF 1/2" I.D. HOSE, 75 FT. LENGTH. CEILING MOUNTED. HOSE STOP
- MFGR: REELCRAFT MODEL 9275-OMP

QC QUICK CONNECT
- TYPE: COMPRESSED AIR, DOUBLE RELEASE QUICK DISCONNECT
- MFGR: CONNECT-US MODEL ISC-08-1252 (3/8" MALE END)

WM-1 WATER METER - DOMESTIC
- TYPE: TOP LOAD BRONZE TURBO TYPE METER. 8-500 GPM OPERATING RANGE. REGISTRATION READS GPM
- MFGR: BADGER RECORDALL II TURBO METER SIZE 2"
- NOTE: WATER METER TO BE READ FROM BUILDING EMCS SYSTEM. FURNISH WITH 2 DRY TYPE CONTACTS. VERIFY COMPATIBILITY OF ALL METER COMPONENTS

GM-1 NATURAL GAS METER
- TYPE: DIAPHRAM TYPE METER. 1000 CFH OPERATING LOAD
- MFGR: SINGER MODEL AL-1000
- EMCS: VERTICAL DIRECT READING INDEX WITH SLOT SENSOR PULSAR. FURNISH WITH 2 DRY TYPE CONTACTS
- NOTE: GAS METER TO BE READ FROM BUILDING EMCS SYSTEM. VERIFY COMPATIBILITY OF ALL METER COMPONENTS

PRV-1 PRESSURE REGULATING VALVE - GAS
- TYPE: SPRING LOADED, INTERNAL RELIEF, CAST IRON BODY 1-1/2" OUTLET WITH 3/16" DIA. PORT. 50 PSI - 11" WC
- MFGR: SINGER MODEL 1600 C
- NOTE: VERIFY CAPACITY WITH REGULATOR MFGR. FOR 1000 CFH OPERATING LOAD

AS BUILT

REV.	DATE	DESCRIPTION	DRAWN	APPR'D

SPACE COMMAND
MALMSTROM AIR FORCE BASE, MONTANA

DRAWN BY KOUBA	TRANSPORTATION FACILITY, BUILDING 882	PROJECT NUMBER NZAS 93-0107
DESIGNED BY KOUBA	PLUMBING LEGENDS/SCHEDULES	ACAD DRAWING NUMBER 93107P01
REVIEWED BY BAKER	SCALE 1/8"=1'-0" DATE 17NOV97 PLATE P-1 PAGE 23 OF 44	RECORD FILE NUMBER

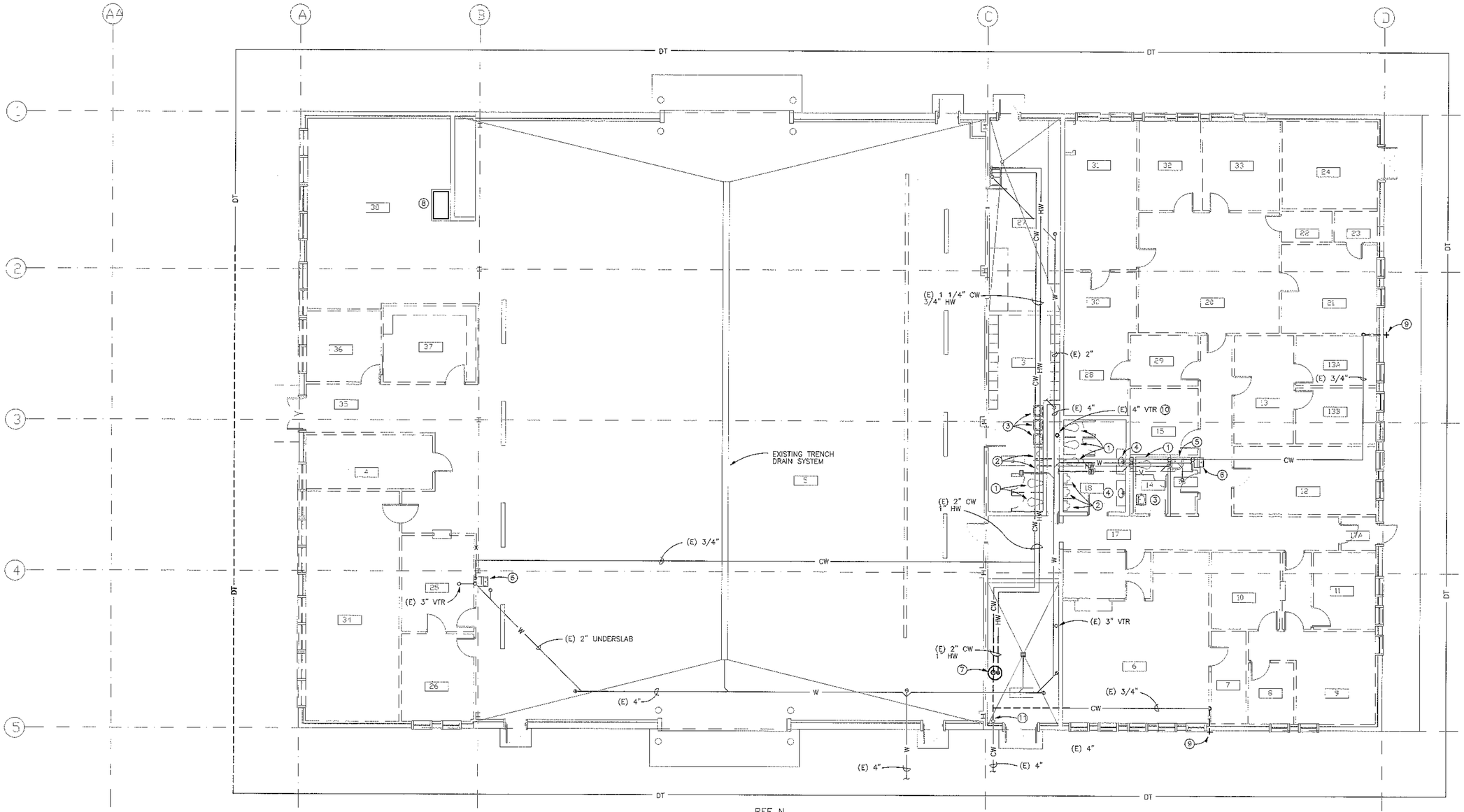

1	MECHANICAL ROOM
2	TOILET
3	LOCKER ROOM
4	BENCH STOCK
5	MAINTENACE ROOM
6	REPORTS & ANALYSIS ROOM
7	KEY PUNCH ROOM
8	SUPERINTENDANTS ROOM
9	CHIEF DISPATCHER
10	TAXI DISPATCHER
11	DRIVERS LOUNGE
12	QC & E OFFICE
13	ADMINISTRATION OFFICE
13A	OFFICE
13B	OFFICE
14	WOMENS RESTROOM
15	TRANSPORTATION
16	JANITOR
17	CORRIDOR
17A	ENTRY VESTIBULE
18	MENS RESTROOM
19	
20	CLASSROOM3
21	TESTING ROOM
22	PROJECTION ROOM
23	BOOK STORAGE
24	STORAGE
25	PRODUCTION CONTROL
26	MAINTENANCE OFFICE
27	BATTERY SHOP
28	COMMANDING OFFICER
29	SECRETARY
30	OFFICE
31	OFFICE
32	OFFICE
33	OFFICE
34	BREAKROOM
35	CORRIDOR
36	LIBRARY
37	TOOL ROOM
38	DRUM STORAGE

1 / M-2 PLUMBING DEMOLITION FLOOR PLAN
BUILDING #882 SCALE: 1/8" = 1'-0"

REF N.

DEMOLITION PLAN NOTES:

1. REMOVE EXISTING WATER CLOSET AND REPLACE WITH NEW, SEE SHEET P-3
2. REMOVE EXISTING URINAL AND REPLACE WITH NEW, SEE SHEET P-3
3. REMOVE EXISTING WALL HUNG LAV AND REPLACE WITH NEW, SEE SHEET P-3
4. REMOVE EXISTING COUNTER TOP LAV AND REPLACE WITH NEW, SEE SHEET P-3
5. REMOVE EXISTING FLOOR MOUNT MOP SINK, CAP W, V, CW & HW PIPING ABOVE CEILING AND BELOW FLOOR
6. REMOVE EXISTING ELECTRIC WATER COOLER, CAP W, V, CW & HW PIPING ABOVE CEILING AND BELOW FLOOR
7. REMOVE EXISTING HOT WATER HEATER AND REPLACE WITH NEW, SEE SHEET P-3
8. REMOVE EXISTING AIR COMPRESSOR AND REPLACE WITH NEW, SEE SHEET P-3
9. REMOVE EXISTING WALL HYDRANT AND REPLACE WITH NEW, SEE SHEET P-3
10. REROUTE EXISTING VENT THRU ROOF, SEE SHEET P-3
11. REMOVE EXISTING WATER ENTRANCE AND REPLACE WITH NEW, SEE SHEET P-4

GENERAL PLAN NOTES:

A. EXISTING W PIPING IS SHOWN UNDERSLAB. EXISTING CW, HW & V PIPING IS SHOWN IN CEILING SPACE UNLESS OTHERWISE INDICATED

B. WHERE EXISTING PLUMBING FIXTURES ARE INDICATED TO BE REMOVED AND REPLACED, CAP AND PROTECT PIPING DURING CONSTRUCTION

AS BUILT

REV.	DATE	DESCRIPTION	DRAWN	APPR'D

DRAWN BY KOUBA	TRANSPORTATION FACILITY, BUILDING 882	PROJECT NUMBER NZAS 93-0107
DESIGNED BY KOUBA	PLUMBING DEMOLITION PLAN	ACAD DRAWING NUMBER 93107P02
REVIEWED BY BAKER	SCALE 1/8"=1'-0" DATE 17NOV97 PLATE P-2 PAGE 24 OF 44	RECORD FILE NUMBER

SPACE COMMAND
MALMSTROM AIR FORCE BASE, MONTANA

001	MECHANICAL ROOM
002	MENS TOILET
003	MENS LOCKER ROOM
004	BENCH STOCK
005	AUTO MAINTENANCE ROOM
006	WOMENS LOCKER ROOM
007	LGTR OFFICER
008	LGTR NCOIC
009	MOBILITY STORAGE
010	COMPUTER TRAINING
011	QUALITY, SAFETY, & TRAINING
012	CONFERENCE ROOM
013	ADMINISTRATION
013A	ADMINISTRATION CLOSET
014	WOMENS TOILET
015	CCT OFFICE
016	CC OFFICE
017	CCQ OFFICE
018	MENS TOILET
019	LGTO ADMINISTRATION
020	LGTO NCOIC
021	BREAK ROOM
022	LGTC OFFICER
023	FLEET WAITING
024	FLEET MANAGEMENT
025	OFFICE
026	OFFICE
027	BATTERY ROOM
028	CORRIDOR
029	CORRIDOR
030	AUTOMOTIVE MAINTENANCE SHOP
031	MAINTENANCE BREAK ROOM
032	TOOL STORAGE
033	METALS SHOP
034	JANITOR
035	MECHANICAL ROOM ABOVE
036	LIBRARY

1 M-4 REMODEL PLUMBING PLAN
BUILDING #882 SCALE: 1/8" = 1'-0"

PLUMBING NOTES:

1. MOUNT WH-1 24" ABOVE GRADE. EXTEND TO FACE OF NEW BUILDING EXTERIOR
2. 1 1/4" CONDENSATE DRAIN FROM EAF-1. DRAIN INTO DRAW BUCKET @ FLOOR SEE MECH.
3. FOR WASTE LINE, REMOVE 6" CONCRETE SLAB AND REPLACE. INSTALL CONCRETE OVER 3" SAND BED
4. MOUNT DSN-1 18" ABOVE GRADE. SPILL ONTO SPLASH BLOCK

GENERAL PLAN NOTES:

A. W PIPING IS SHOWN UNDERSLAB. CW, HW & V PIPING IS SHOWN IN CEILING SPACE UNLESS OTHERWISE INDICATED

B. WHERE EXISTING PLUMBING FIXTURES ARE INDICATED TO BE REMOVED AND REPLACED, CAP AND PROTECT PIPING DURING CONSTRUCTION

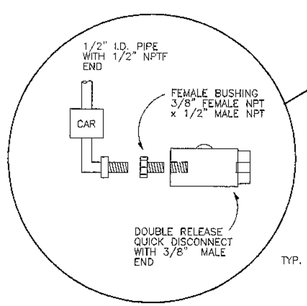

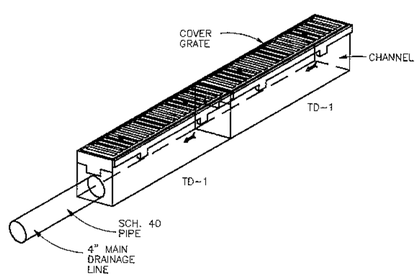

2 P-3 TRENCH DRAIN DETAIL
SCALE: nts

AS BUILT

SPACE COMMAND
MALMSTROM AIR FORCE BASE, MONTANA

REV.	DATE	DESCRIPTION	DRAWN	APPR'D

DRAWN BY KOUBA	TRANSPORTATION FACILITY, BUILDING 882	PROJECT NUMBER NZAS 93-0107
DESIGNED BY KOUBA	PLUMBING REMODEL PLAN	ACAD DRAWING NUMBER (E:\MALMSTROM\BASE) 93107P03
REVIEWED BY BAKER	SCALE 1/8"=1'-0" DATE 17NOV97 PLATE P-3 PAGE 25 OF 44	RECORD FILE NUMBER

6 P-4 MECHANICAL ROOM PLUMBING PLAN
SCALE: 1/4" = 1'-0"

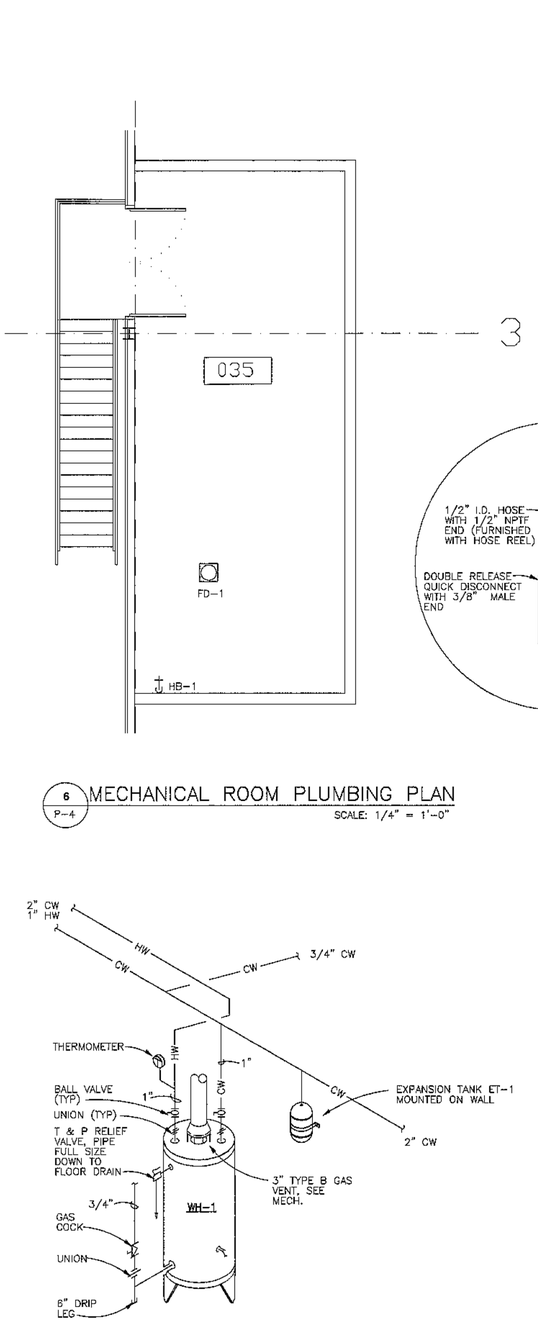

4 P-4 F022AP WATER HEATER DETAIL
NTS

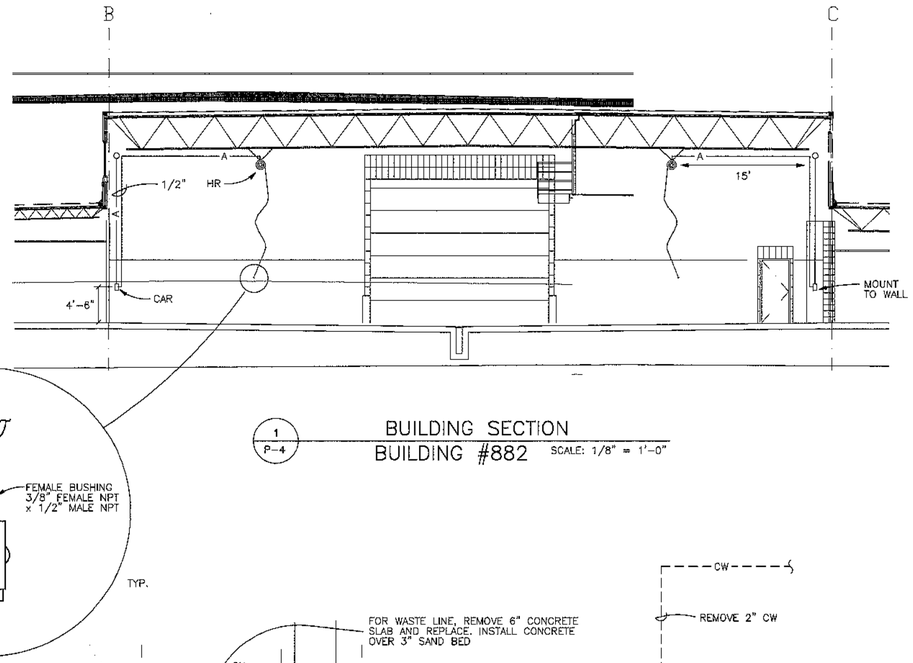

1 P-4 BUILDING SECTION
BUILDING #882 SCALE: 1/8" = 1'-0"

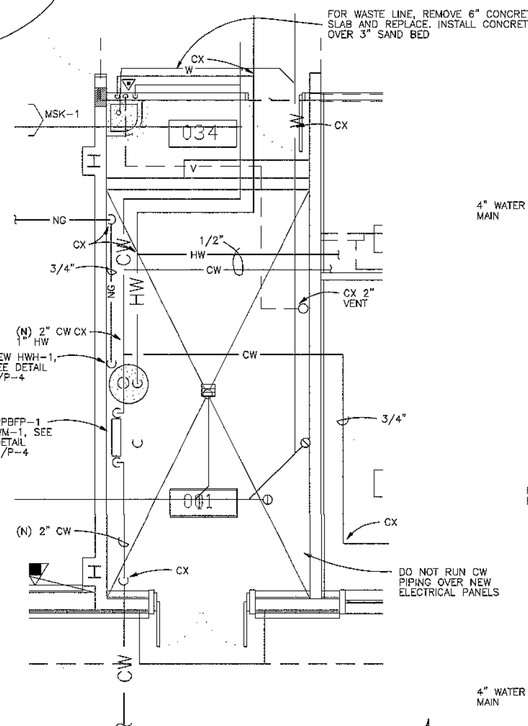

3 P-4 ENLARGED PLUMBING PLAN
BUILDING #882 SCALE: 1/4" = 1'-0"

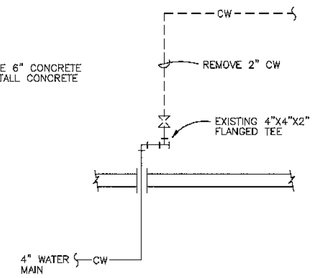

6 P-4 C004AP EXISTING WATER ENTRANCE
NTS

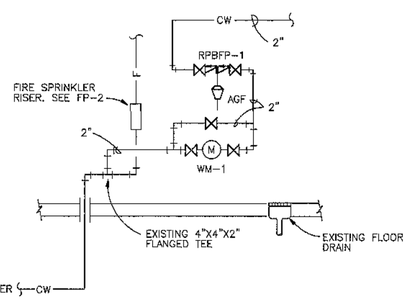

5 P-4 C004AP NEW WATER ENTRANCE
NTS

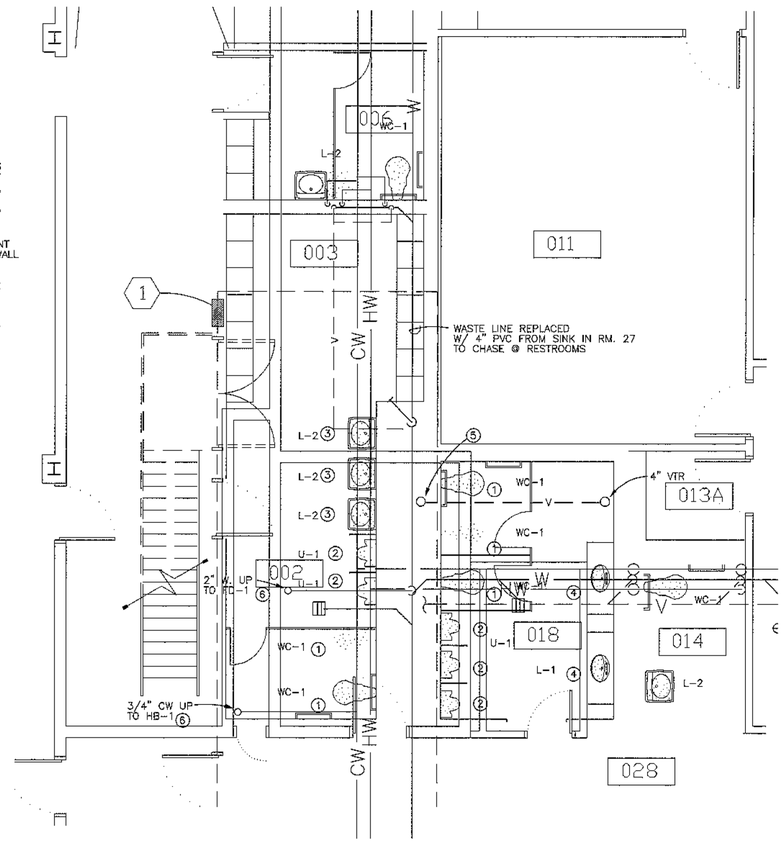

2 P-4 ENLARGED PLUMBING PLAN
BUILDING #882 SCALE: 1/4" = 1'-0"

PLUMBING NOTES:

1. INSTALL NEW WATER CLOSET, CONNECT TO EXISTING PIPING
2. INSTALL NEW URINAL, CONNECT TO EXISTING PIPING
3. INSTALL NEW WALL HUNG LAV, CONNECT TO EXISTING PIPING
4. INSTALL NEW COUNTER TOP LAV, CONNECT TO EXISTING PIPING
5. REROUTE EXISTING VENT.
6. SEE 6/P-4 THIS SHEET.

AS BUILT

REV.	DATE	DESCRIPTION	DRAWN	APP'D

DRAWN BY KOUBA	TRANSPORTATION FACILITY, BUILDING 882	PROJECT NUMBER NZAS 93-0107
DESIGNED BY KOUBA	ENLARGED PLANS & DETAILS	ACAD DRAWING NUMBER 93107P04
REVIEWED BY BAKER	SCALE 1/8"=1'-0" / DATE 17NOV97 / PLATE P-4 / PAGE 26 OF 44	RECORD FILE NUMBER

SPACE COMMAND
MALMSTROM AIR FORCE BASE, MONTANA

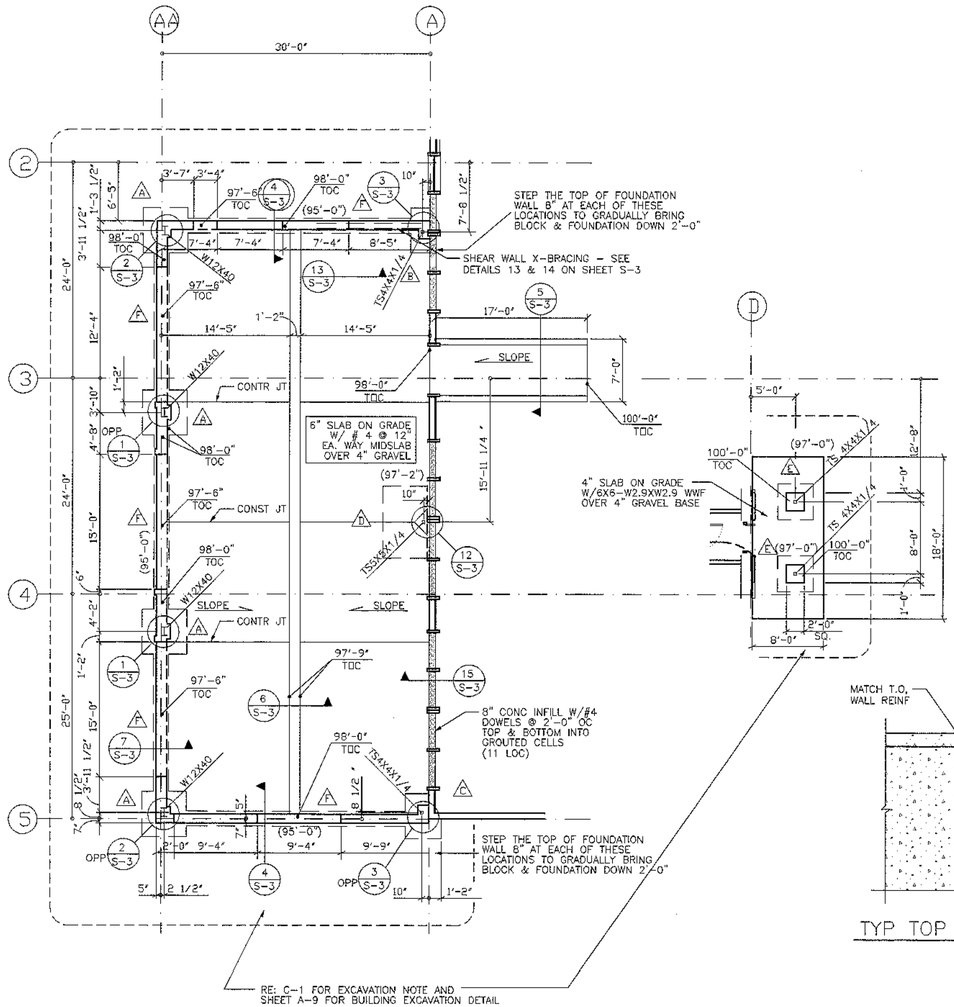

FOUNDATION PLAN

SCALE: 1/8" = 1'-0"

NOTES:

1. (XX'-XX") INDICATES ELEVATION OF TOP OF FOOTING
2. W X X — INDICATES STEEL COLUMN.
3. TOC — INDICATES ELEVATION OF TOP OF CONCRETE WALL.
4. (A) — INDICATES FOOTING TYPE SEE SCHEDULE.
5. PAD FOOTINGS TO BE CENTERED UNDER COLUMN. CONTINUE WALL FOOTING REINFORCING THROUGH PAD FOOTING.

FOOTING SCHEDULE			
MARK	SIZE (WXLXD)	REINF. BOT	REMARKS
A	5' X 5' X 1'-0"	6-#5 E.W.	
B	5' X 2' X 1'-0"	6-#4 TRANSVERSE 3-#4 LONGITUDINAL	SEE DETAIL
C	5' X 4' X 1'-0"	6-#4 TRANSVERSE 3-#4 LONGITUDINAL	SEE DETAIL
D	8' X 5' X 1'-2"	9-#5 TRANSVERSE 6-#5 LONGITUDINAL	SEE DETAIL
E	4' X 4' X 1'-0"	5-#4 E.W.	
F	1' - 8" X CONT X 1'-0"	2 - #5 CONT CENTERED IN FOOTING	

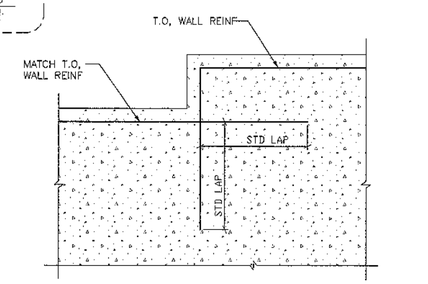

TYP TOP OF WALL STEP DETAIL

NOT TO SCALE

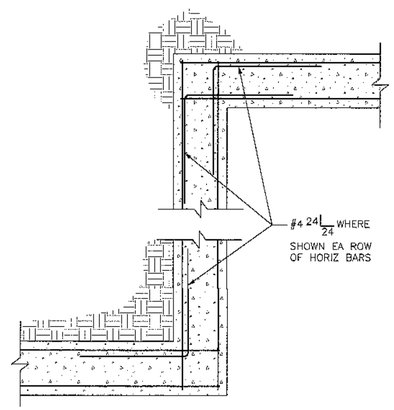

TYP CORNER DTL 2 ROW OF REINF

NOT TO SCALE

STRUCTURAL GENERAL NOTES

****

A. GOVERNING CODES
1) UNIFORM BUILDING CODE (UBC), 1994 EDITION
2) AMERICAN CONCRETE INSTITUTE (ACI), 318-89
3) AMERICAN INSTITUTE OF STEEL CONSTRUCTION (AISC), LRFD, 2ND EDITION

B. DESIGN LOADS AND CRITERIA
1) GRAVITY LOADS (PSF):

LOCATION	DEAD LOAD	LIVE OR SNOW LOAD	TOTAL LOAD
ROOF	28	40	68

2) WIND CRITERIA: 90 MPH / EXPOSURE "C"
I: 1
3) SEISMIC CRITERIA: ZONE: 2B
4) SOIL BEARING PRESSURE: 2000 PSF ON ENGINEERED FILL
5) FROST DEPTH BELOW GRADE: 42 INCHES

C. MATERIALS
1) CONCRETE: NORMAL WEIGHT; ASTM C150 TYPE I OR II CEMENT
f'c = 4000 PSI
4 1/2% TO 7% ENTRAINED AIR
MAXIMUM AGGREGATE SIZE: 1-1/2" AT FOOTINGS
3/4" ELSEWHERE
2) REINFORCING BARS: ASTM A615, GRADE 60
3) WELDED WIRE FABRIC: ASTM A185
4) ANCHOR BOLTS: ASTM A307
5) STEEL SHAPES & PLATES: ASTM A36, Fy = 36 KSI
6) STEEL TUBES: ASTM A500 GRADE B, Fy = 46 KSI
7) BOLTED CONNECTIONS: ASTM A325 BOLTS
8) WELDED CONNECTIONS: E70XX ELECTRODES

D. FOUNDATIONS
1) PLACE FOOTINGS ON ENGINEERED FILL PLACED OVER GEOTEXTILE OVER UNDISTURBED NATURAL SOILS. ENGINEERED FILL SHALL HAVE THE FOLLOWING GRADATION:

	PASSING FINER BY WEIGHT ASTM C136
3"	100
NO. 4 SIEVE	50 - 80
NO. 200 SIEVE	10 MAX

PLACE FILL IN UNIFORM LIFTS (8" MAX.) AND COMPACT TO 95% STANDARD PROCTOR ACCORDING TO ASTM D698.
2) PLACE INTERIOR SLABS ON GRADE 3/4" MINUS GRANULAR FILL AS INDICATED.
3) PROTECT SOILS BENEATH SLABS AND FOOTINGS FROM FREEZING.
4) PROVIDE POSITIVE DRAINAGE AWAY FROM THE STRUCTURE DURING CONSTRUCTION.
5) AVOID EXCESSIVE WETTING OR DRYING OF FOUNDATION EXCAVATIONS.

E. CONCRETE
1) CHAMFER ALL EXPOSED OUTSIDE CORNERS 3/4" UNLESS INDICATED OTHERWISE.
2) WHERE TOP SURFACES OF CONCRETE SLABS ARE SHOWN TO BE RECESSED, MAINTAIN INDICATED SLAB THICKNESS.
3) CONCRETE SLAB JOINTS ARE INDICATED ON THE DRAWINGS. CONSTRUCTION JOINTS MAY, AT CONTRACTOR'S OPTION, BE SUBSTITUTED FOR CONTRACTION JOINTS.
4) DO NOT USE CHLORIDE ADMIXTURES IN CONCRETE.
5) DETAIL REINFORCING BARS ACCORDING TO LATEST EDITION OF ACI DETAILING MANUAL.
6) MINIMUM REINFORCING BAR COVER:
3" AT UNFORMED SURFACES EXPOSED TO EARTH
1 1/2" AT FORMED SURFACES EXPOSED TO EARTH OR WEATHER
3/4" AT SLABS AND AT WALLS NOT EXPOSED TO EARTH OR WEATHER
7) LAP REINFORCING BARS ACCORDING TO THE FOLLOWING, UNLESS INDICATED OTHERWISE:
(TOP BARS ARE HORIZONTAL BARS WITH MORE THAN 12" OF CONCRETE CAST BELOW THE BAR)

BAR SIZE	REG BARS	TOP BARS
#3	1'-0	1'-2
#4	1'-3	1'-5
#5	1'-6	2'-0
#6	2'-0	2'-8

8) WELDING OF REINFORCING BARS IS NOT PERMITTED UNLESS SPECIFICALLY DETAILED.
9) TIE DOWELS IN PLACE BEFORE PLACING CONCRETE. DO NOT STAB OR "WET-SET" DOWELS.

F. STRUCTURAL STEEL
1) DETAIL, FABRICATE AND ERECT STRUCTURAL STEEL IN ACCORDANCE WITH THE NINTH EDITION OF AISC "MANUAL OF STEEL CONSTRUCTION AND AISC CODE OF STANDARD PRACTICE."
2) CONNECTIONS MADE WITH HIGH-STRENGTH STEEL BOLTS SHALL CONFORM TO THE CURRENT "SPECIFICATIONS FOR STRUCTURAL JOINTS" USING ASTM A325 BOLTS AS ENDORSED BY AISC.
3) USE STANDARD FRAMED BEAM CONNECTIONS WITH 3/4" DIAMETER BOLTS (OR WELDED EQUIVALENT) UNLESS OTHERWISE DETAILED.
4) ALL WELDERS SHALL HAVE EVIDENCE OF PASSING THE AWS STANDARD QUALIFICATION TESTS.
5) WELDS SHALL NOT BE LESS THAN 3/16" CONTINUOUS FILLET, UNLESS INDICATED OTHERWISE.

G. STEEL JOISTS AND DECK
1) STEEL JOISTS SHALL CONFORM TO THE STANDARD SPECIFICATIONS AND LOAD TABLES OF THE STEEL JOIST INSTITUTE.
2) STEEL DECK SHALL CONFORM TO THE APPLICABLE SPECIFICATIONS OF THE STEEL DECK INSTITUTE.
3) STEEL JOISTS ARE INDICATED ON THE DRAWINGS USING INDUSTRY STANDARD TERMINOLOGY.
4) STEEL JOIST HEADERS INDICATED ON THE DRAWINGS ARE TO BE DESIGNED AND PROVIDED BY THE STEEL JOIST MANUFACTURER.
5) PROVIDE ADDITIONAL FRAMING AS REQUIRED FOR OPENINGS THROUGH DECK.
6) WHERE NOT SHOWN, SUPPORT DECK EDGES WITH L3x3x1/4.
7) METAL ROOF DECK SHALL HAVE THE FOLLOWING MINIMUM PROPERTIES:

DEPTH	1-1/2 INCHES
TYPE	WIDE RIB
THICKNESS	.0295 INCHES (22 GAGE)
FINISH	GALVANIZED
I	0.169 In4 / FT
S(+)	0.186 in3 / FT

8) ATTACH ROOF DECK TO SUPPORTING STEEL WITH HILTI ENP2 OR HSN POWDER-DRIVEN PINS. UNLESS INDICATED OTHERWISE, PROVIDE FASTENERS IN A 36/4 PATTERN AT INTERIOR LINES OF SUPPORT AND AT 6" AT DECK PERIMETER. PROVIDE #10 TEK SCREWS AT 2'-0" OC AT SIDELAP CONDITIONS.

H. LIGHT GAGE STEEL "C" STUDS AND JOISTS
1) STEEL STUDS, JOISTS AND ACCESSORIES SHALL BE SUPPLIED BY A SINGLE MANUFACTURER.
2) SIZES OF STEEL STUDS AND JOISTS ARE AS INDICATED. THE INTENT OF THE DESIGN IS FOR THESE ITEMS TO BE ATTACHED TO EACH OTHER AND TO THE SURROUNDING STRUCTURE TO BEHAVE AS A SYSTEM. WHETHER SHOWN OR NOT, PROVIDE ACCESSORY ITEMS (ANGLES, CLIPS, STIFFENERS, STRAPS, ETC.) DESIGNED BY THE MANUFACTURER, FOR A COMPLETE SYSTEM.
3) STEEL "C" STUDS SHALL HAVE THE FOLLOWING MINIMUM MAJOR AXIS PROPERTIES:

DEPTH (in):	6.00	8.00
FLANGE WIDTH (in):	1.625	1.625
THICKNESS (in):	0.0566	0.0451
GAGE:	16	18
I (in4):	2.76	4.462
S (in3):	0.859	1.068

PROVIDE CONTINUOUS HORIZONTAL BRIDGING FOR STUDS AT 4'-6" O.C. MAXIMUM SPACING.
4) STEEL JOIST SHALL HAVE THE FOLLOWUNG MINIMUM MAJOR AXIS PROPERTIES:

DEPTH (IN):	6.00
FLANGE WIDTH (IN):	2.5
THICKNESS (IN):	0.0566
GAGE:	16
I (IN4):	3.758
S (IN3):	1.067

5) STEEL STUDS, JOISTS AND ACCESSORIES SHALL BE GALVANIZED.

I. ABBREVIATIONS LIST - THIS IS A STANDARD LIST. SOME OF THE LISTED ABBREVIATIONS MAY NOT APPEAR IN THE DRAWINGS FOR THIS PROJECT.

ANC	ANCHOR
ALT	ALTERNATE
BLDG	BUILDING
BM	BEAM
BRG	BEARING
BTWN	BETWEEN
CL	CENTERLINE
CLR	CLEAR
CMU	CONCRETE MASONRY UNIT
COL	COLUMN
CONN	CONNECTION/CONNECTOR
CONSTR JT	CONSTRUCTION JOINT
CONT	CONTINUE/CONTINUOUS
CONTR JT	CONTRACTION JOINT
EXP	EXPANSION
HAS	HEADED ANCHOR STUD
ISOL JT	ISOLATION JOINT
LONG	LONGITUDINAL
LVL	LAMINATED VENEER LUMBER
NFS	NON-FROST SUSCEPTIBLE
NIC	NOT IN CONTRACT
PT	PRESSURE TREATED
REINF	REINFORCEMENT/REINFORCING
REQ	REQUIRED
SPA	SPACE/SPACES
STIFF	STIFFENER
TRANS	TRANSVERSE

J. MISCELLANEOUS
1) ELEVATIONS REFERENCE MAIN FLOOR ELEVATION 100'-0 = EXISTING MAIN FLOOR LEVEL.
2) COORDINATE OPENINGS AND EMBEDDED ITEMS NOTED ON ALL CONSTRUCTION DOCUMENTS WITH APPROPRIATE TRADES.
3) BEFORE FABRICATION, HAVE SHOP DRAWINGS REVIEWED BY ARCHITECT AND/OR ENGINEER.
4) TEMPORARILY BRACE THE STRUCTURE TO RESIST ALL LOADS OR COMBINATIONS OF LOADS UNTIL APPROPRIATE LOAD-RESISTING ELEMENTS ARE IN PLACE.

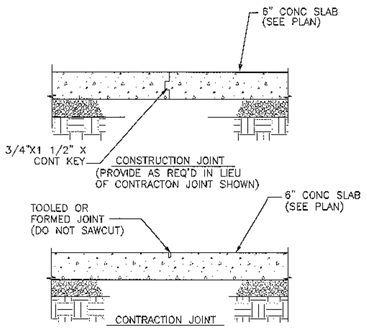

TYP SLAB JOINT DETAILS

NOT TO SCALE

AS BUILT

REV.	DATE	DESCRIPTION	DRAWN	APPR'D

DRAWN BY DGG
DESIGNED BY KGP
REVIEWED BY SHEPARD
TRANSPORTATION FACILITY, BUILDING 882
FOUNDATION PLAN
SCALE 1/8"=1'-0" DATE 17NOV97 PLATE S-1 PAGE 20 OF 44
PROJECT NUMBER NZAS 93-0107
ACAD DRAWING NUMBER (CLIMA\ACC\BLDG882) 93107S01
RECORD FILE NUMBER

SPACE COMMAND
MALMSTROM AIR FORCE BASE, MONTANA

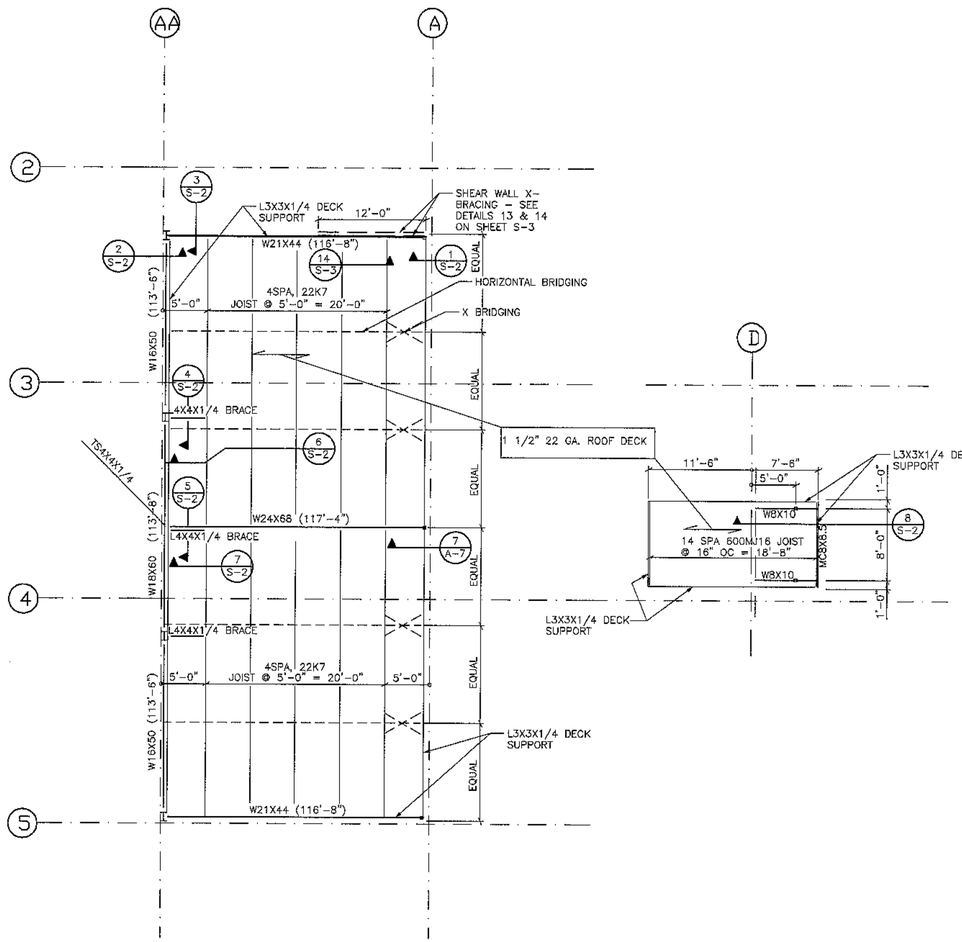

ROOF FRAMING PLAN

SCALE: 1/8" = 1'-0"

NOTES:

1. BEAM NOTES:
   (XX'-XX") INDICATES ELEVATION OF TOP OF BEAM.

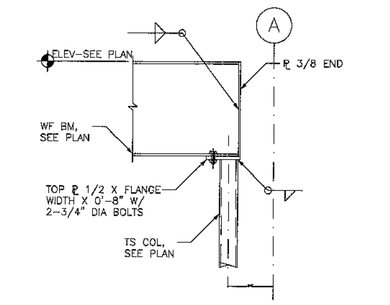

1 S-2 — 3/4" = 1'-0"

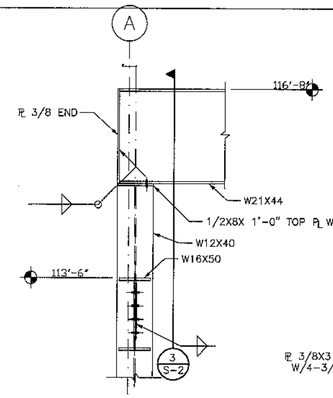

2 S-2 — 3/4" = 1'-0"

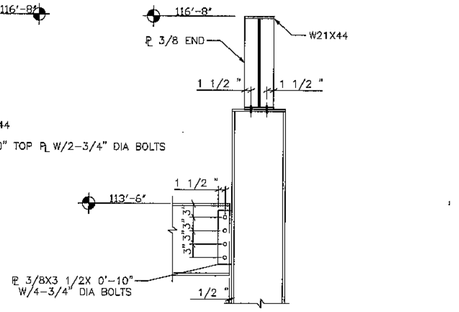

3 S-2 — 3/4" = 1'-0"

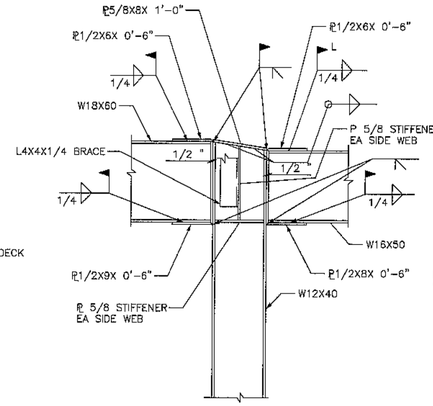

4 S-2 — 3/4" = 1'-0"

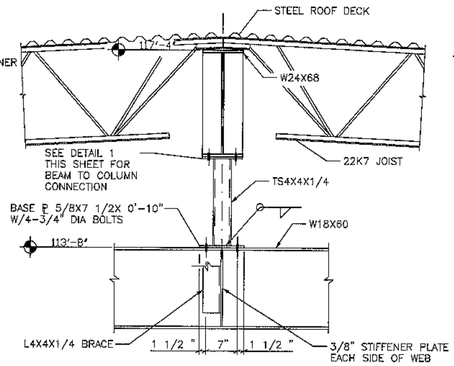

5 S-2 — 3/4" = 1'-0"

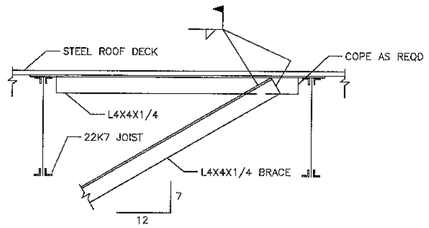

6 S-2 — 3/4" = 1'-0"

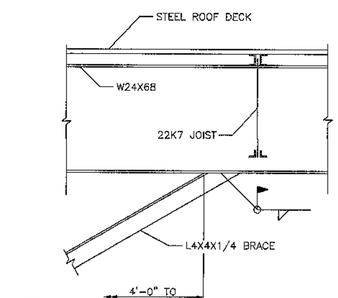

7 S-2 — 3/4" = 1'-0"

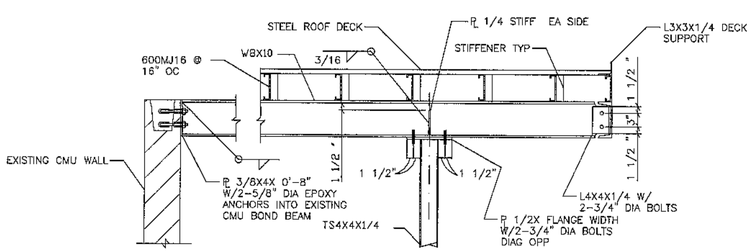

8 S-2 — 3/4" = 1'-0"

AS BUILT

REV.	DATE	DESCRIPTION	DRAWN	APPR'D

DRAWN BY DGG	TRANSPORTATION FACILITY, BUILDING 882	PROJECT NUMBER NZAS 93-0107
DESIGNED BY KGP	ROOF FRAMING PLAN	ACAD DRAWING NUMBER 93107S02
REVIEWED BY SHEPARD	SCALE 1/8"=1'-0" DATE 17NOV97 PLATE S-2 PAGE 21 OF 44	RECORD FILE NUMBER

SPACE COMMAND

MALMSTROM AIR FORCE BASE, MONTANA

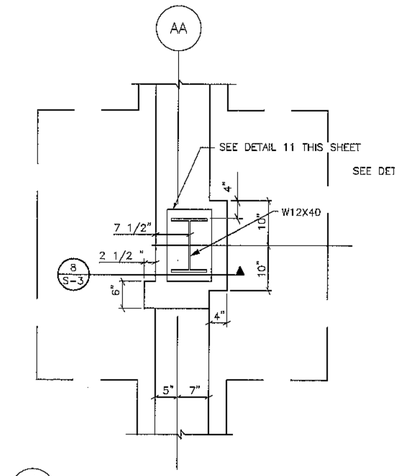

1 S-3 3/4" =1'-0"

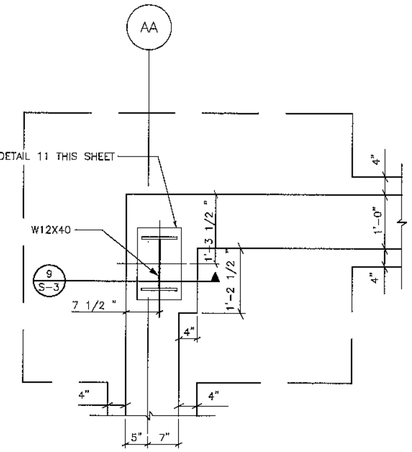

2 S-3 3/4" =1'-0"

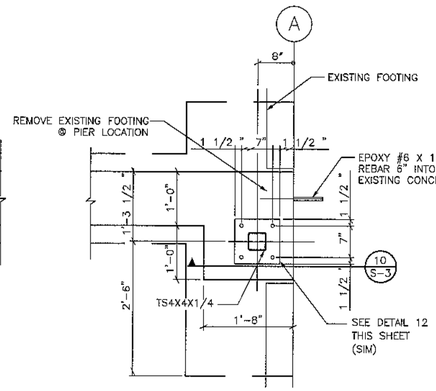

3 S-3 3/4" =1'-0"

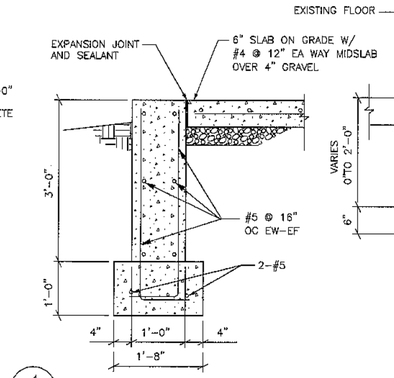

4 S-3 3/4" =1'-0"

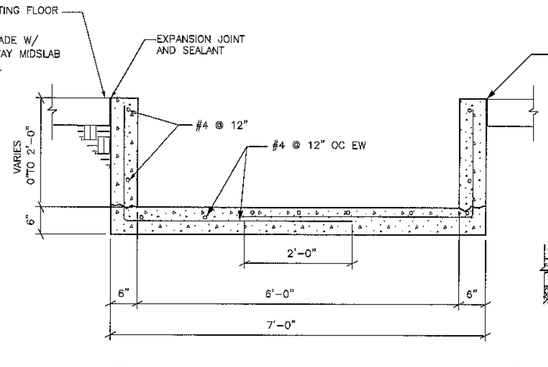

5 S-3 3/4" =1'-0"

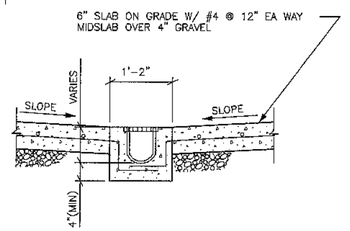

6 S-3 3/4" =1'-0"

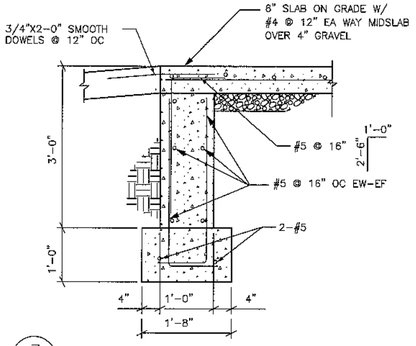

7 S-3 3/4" =1'-0"

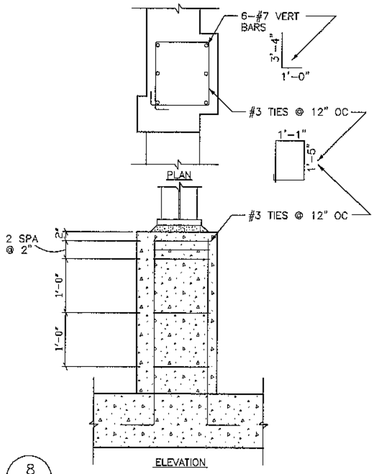

8 S-3 3/4" =1'-0"

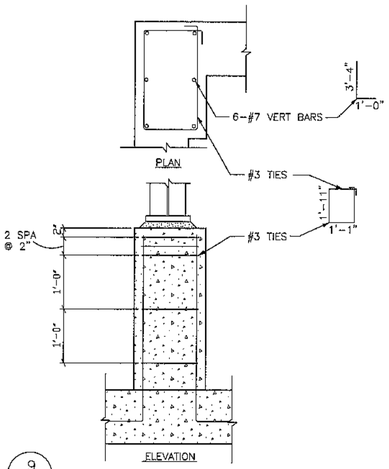

9 S-3 3/4" =1'-0"

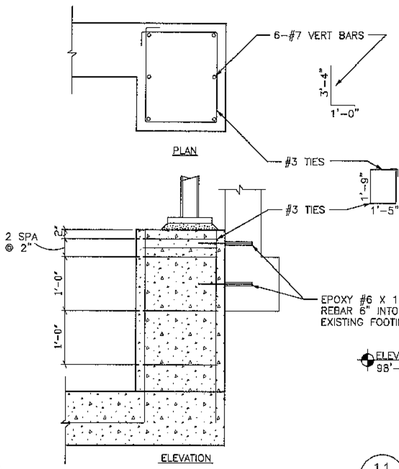

10 S-3 3/4" =1'-0"

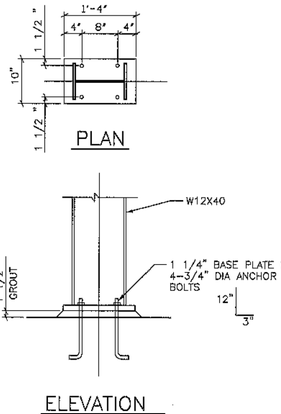

11 S-3 3/4" =1'-0"

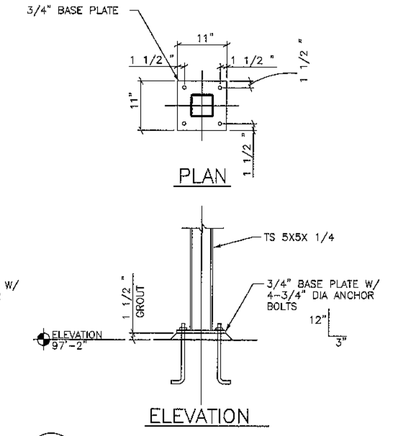

12 S-3 3/4" =1'-0"

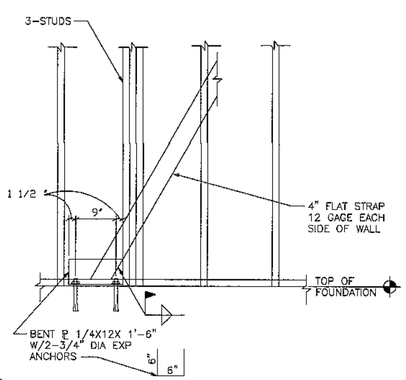

13 S-3 3/4" =1'-0"

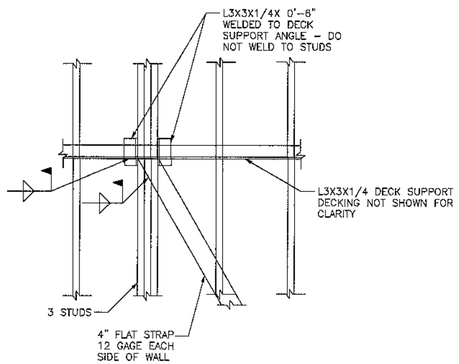

14 S-3 3/4" =1'-0"

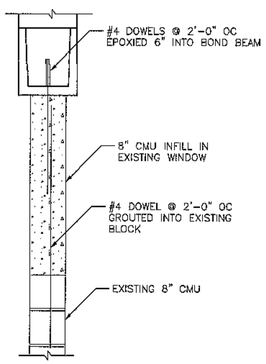

15 S-3 3/4" =1'-0"

SPACE COMMAND

MALMSTROM AIR FORCE BASE, MONTANA

AS BUILT

REV.	DATE	DESCRIPTION	DRAWN	APPR'D

DRAWN BY DGG	TRANSPORTATION FACILITY, BUILDING 882	PROJECT NUMBER NZAS 93-0107
DESIGNED BY KGP	DETAILS	ACAD DRAWING NUMBER 93107S03
REVIEWED BY SHEPARD	SCALE AS SHOWN / DATE 17NOV97 / PLATE S-3 / PAGE 22 OF 44	RECORD FILE NUMBER

RENOVATION OF TRANSPORTATION FACILITY BUILDING 882 (NZAS 93-0107)

ABBREVIATIONS

09511	2X2	2X2 ACOUSTICAL CEILING TILE
05400	AB	AIR BARRIER
08410	AD	ALUMINUM DOOR W/ RELITE (PREFINISHED)
05500	ANG6	6"X6"X3/8" STEEL ANGLE (PAINTED)
07901	APS	ALL PURPOSE SEALANT
–	AS	AIR SPACE
08520	AW	ALUMINUM WINDOW (SEE SHEET A-8)
07550	BA	BONDING ADHESIVE
04200	BB	BOND BEAM
08410	BS	PREFINISHED BREAKSHAPE
09255	CB1	'J' SHAPED GYPSUM CASING BEAD
03300	CF	CONCRETE FOUNDATION (SEE STRUCT)
04200	CMU4	4" CONCRETE MASONRY VENEER (SPLIT FACE) FED COLOR #2357E
04200	CMU8	8" CONCRETE MASONTY UNIT
03300	CS	CONCRETE SLAB (SEE STRUCT)
–	E	EXISTING
EAN1	EAN1	1/2"X8" EXPANSION ANCHOR @ 2'-0" O.C.
EAN2	EAN2	1/4"X4" EXPANSION ANCHOR @ 2'-0" O.C.
07550	EPDM	SINGLE PLY ROOFING MEMBRANE
07550	FAS	APPROVED FASTENER
FRP	FRP	FIBER REINFORCED PANELS 4'-0" HIGH WAINSCOTT
02200	GRAV	4" CRUSHED GRAVEL
09255	GYP1	5/8" TYPE 'X' GYPSUM BOARD
09255	HC1	7/8" HAT CHANNELS @ 24" O.C.
07620	HCC	CONTINUOUS HOLD DOWN CLIP
04200	HJR	HORIZONTAL JOINT REINFORCING
08110	HMF	2" EXPANDED POLYSTYRENE INSULATION
07210	INS2	HOLLOW METAL FRAME (GROUT SOLID)
07210	INS3	3 1/2" BATT INSULATION (R-11)
07210	INS6	6" BATT INSULATION (R-19)
07210	INSP	6" POLYISOCYANUTRATE INSULATION (R-38)
07210	INST	TAPERED EXPANDED POLYSTYRENE ROOFING INSULATION
04200	LCF	LAMINATED COPPER FLASHING
05400	MCJ6	6" METAL 'C' JOIST (16 GA 600MJ SECTION)
05400	MCJ8	8" METAL 'C' JOIST (16 GA 800 MJ SECTION)
05310	MD	METAL DECKING (SEE STRUCT)
07412	MP1	PREFINISHED METAL WALL PANELS FED COLOR #37056
07412	MP2	PREFINISHED METAL WALL PANELS FED COLOR #23578
09255	MS2	2 1/2" METAL STUDS @ 16" O.C. (20 GA)
09255	MS3	3 5/8" METAL STUDS @ 16" O.C. (20 GA)
09255	MS6	6" METAL STUDS @ 16" O.C. (20 GA)
05400	MS6S	6" STRUCTURAL METAL STUDS @ 16" O.C. (16 GA)
05400	MS8S	8" METAL STUDS @ 16" O.C. (18 GA)
09255	MZF1	1" METAL 'Z' FURRING @ 16" O.C. (25 GA)
PAF	PAF	POWER ACTUATED FASTENERS
07620	PFM	16 GA. PREFIN. METAL FLASHING
07620	PFSMS	16 GA. PREFIN. SHEET METAL SIDING FED COLOR #37056
06100	PLY1	3/4" PLYWOOD
07550	PLY2	1/2" TREATED PLYWOOD
07620	PMC	PREFINISHED METAL COPING
07901	SBR	SEALANT & BACKER ROD
07550	SC	STORM COLLAR
09255	SGC	SUSPENDED 5/8" TYPE 'X' GYPSUM CEILING
07550	SS	SEAM SEALANT
07550	SSC	STAINLESS STEEL CLAMPING RING
09255	ST	SLIP TRACK
05120	STRUCT	SEE STRUCTURAL FOR MEMBER DETAILS
07550	TB	ALUMINUM TERMINATION BAR
TEK	TEK	# 10 TEK SCREWS
06100	TWN	TREATED WOOD NAILER
07550	UFL	UNCURED ROOFING MEMBRANE FLASHING
09255	VR1	VAPOR RETARDER
–	VTR	VENT THRU ROOF

LEGEND

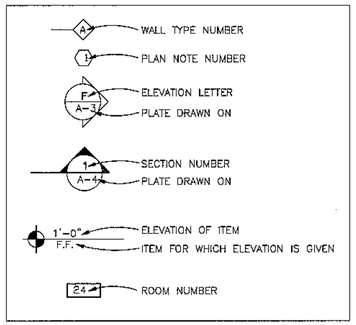

GENERAL NOTES

1. THE REMOVAL/DEMOLITION NOTES LISTED ON THESE SHEETS ARE INTENDED TO CONVEY A GENERAL DESCRIPTION OF THE REMOVAL/DEMOLITION WORK THROUGHOUT THE PROJECT. HOWEVER, THESE NOTES MAY NOT ADDRESS EVERY DEMOLITION CONDITION NECESSARY FOR THE SUCCESSFUL COMPLETION OF THE NEW CONSTRUCTION. THE CONTRACTOR IS RESPONSIBLE TO REMOVE AND/OR DEMOLISH ANY EXISTING CONDITIONS REQUIRED FOR THE SUCCESSFUL INSTALLATION AND ERECTION OF ANY NEW CONSTRUCTION IDENTIFIED IN THESE DOCUMENTS. ANY REMOVAL/DEMOLITION REQUIRED FOR NEW CONSTRUCTION, BUT NOT SPECIFICALLY NOTED, WILL BE ASSIGNED RESPONSIBILITY BY THE GENERAL CONTRACTOR.
2. PROMPTLY REPAIR DAMAGES CAUSED TO ADJACENT FACILITIES/FINISHES BY DEMOLITION OR CONSTRUCTION WORK AT NO ADDITIONAL COST TO THE OWNER.
3. REMOVE DEBRIS FROM SITE IMMEDIATELY AND DISPOSE OF LEGALLY. THE BUILDING AND GROUNDS SHALL BE KEPT CLEAN AND FREE OF REFUSE AT ALL TIMES.
4. WHERE EXISTING EQUIPMENT, PIPING, CEILINGS, DUCTS, ETC. ARE TO BE REMOVED, SUCH REMOVAL SHALL INCLUDE ALL ANCHORS, HANGERS, FRAMING FOUNDATIONS, ETC.
5. PATCH FLOORS, WALLS, AND CEILINGS TO MATCH ADJACENT SURFACES AFTER DEMOLITION OR REMOVAL WORK IN ORDER TO BE READY TO RECEIVE FINAL FINISHES. ALL REMOVAL/DEMOLITION AREAS THAT ADJOIN NEW CONSTRUCTION SHALL BE LEFT READY FOR INSTALLATION OF NEW FINISHES. ALL REQUIRED PATCHING TO LEAVE SURFACES READY FOR NEW FINISHES SHALL BE DONE BY THE CONTRACTOR DURING THE REMOVAL/DEMOLITION PERIOD. THE TERM "MATCH ADJACENT SURFACE" INCLUDES TEXTURE AND FINISH.
6. THESE DOCUMENTS INDICATE CONSTRUCTION MATERIALS AND METHODS OF CONSTRUCTION IN ORDER TO ESTABLISH STANDARDS FOR QUALITY AND/OR PERFORMANCE. MATERIALS AND METHODS OTHER THAN THOSE INDICATED WITHIN THESE DOCUMENTS SHALL BE CONSIDERED FOR ACCEPTENCE BY THE GOVERNMENT, PROVIDED THEY DO NOT AFFECT THE APPEARANCE FROM THAT INDICATED WITHIN THESE CONSTRUCTION DOCUMENTS IN ANY WAY WHATSOEVER.
7. THE CONTRACTOR SHALL FIELD VERIFY ALL DIMENSIONS INDICATED WITHIN THESE DOCUMENTS AND SHALL NOTIFY THE CONTRACTING OFFICER OF ANY VARIATION PRIOR TO THE PURCHASING OF MATERIALS, STARTING FABRICATION OR BEGINNING CONSTRUCTION.
8. CONCEAL ALL PIPING CONDUITS, DUCTWORK, ETC. IN ALL FINISHED SPACES

SHEET INDEX

SHT #	SHEET INDEX	PLATE
1	COVER SHEET/SHEET INDEX	T-1
2	SITE PLAN	C-1
3	DEMOLITION FLOOR PLAN	A-1
4	DEMOLITION EXTERIOR ELEVATIONS	A-2
5	REMODEL FLOOR PLAN	A-3
6	ENLARGED PLANS & INTERIOR ELEVATIONS	A-4
7	ENLARGED PLANS & INTERIOR ELEVATIONS	A-5
8	REMODEL EXTERIOR ELEVATIONS	A-6
9	ROOF PLAN	A-7
10	ROOF DETAILS	A-8
11	BUILDING SECTIONS & DETAILS	A-9
12	WALL SECTIONS & DETAILS	A-10
13	WALL SECTIONS & DETAILS	A-11
14	DOOR & WINDOW DETAILS	A-12
15	DOOR SCHEDULE & ELEVATIONS/STAIR DETAILS	A-13
16	FINISH PLAN	A-14
17	REFLECTED CEILING PLAN	A-15
18	CABINET SECTIONS & DETAILS	A-16
19	ASBESTOS ABATEMENT PLANS	A-17
20	FOUNDATION PLAN & DETAILS	S-1
21	ROOF FRAMING PLAN & DETAILS	S-2
22	SECTIONS & DETAILS	S-3

SHT #	SHEET INDEX	PLATE
23	PLUMBING LEGENDS & SCHEDULES	P-1
24	PLUMBING DEMOLITION PLAN	P-2
25	PLUMBING REMODEL PLAN	P-3
26	PLUMBING ENLARGED PLAN & DETAILS	P-4
27	FIRE SPRINKLER LEGENDS, SITE, & SECTIONS	FP-1
28	FIRE SPRINKLER FLOOR PLAN	FP-2
29	MECHANICAL LEGEND & SCHEDULE	M-1
30	MECHANICAL DEMO FLOOR PLAN	M-2
31	MECHANICAL REMODEL FLOOR PLAN	M-3
32	HYDRONIC PIPING PLAN	M-4
33	HVAC SECTIONS & ENLARGED PLANS	M-5
34	HVAC SECTIONS	M-6
35	FLOW DIAGRAMS & ENLARGED MECH. PLANS	M-7
36	HVAC DETAILS	M-8
37	TEMP CONTROL SCHEMATIC DIAGRAM	M-9
38	ELECTRICAL LEGENDS & SCHEDULES	E-1
39	ELECTRICAL DETAILS	E-2
40	ELECTRICAL DEMO PLAN	E-3
41	ELECTRICAL LIGHTING PLAN	E-4
42	ELECTRICAL POWER PLAN	E-5
43	SPECIAL SYSTEMS PLAN	E-6
44	ELECTRICAL SITE PLAN	E-7
PLATE ELEC-	PAGE 1 OF 1 ELECTRICAL MODIFICATIONS	

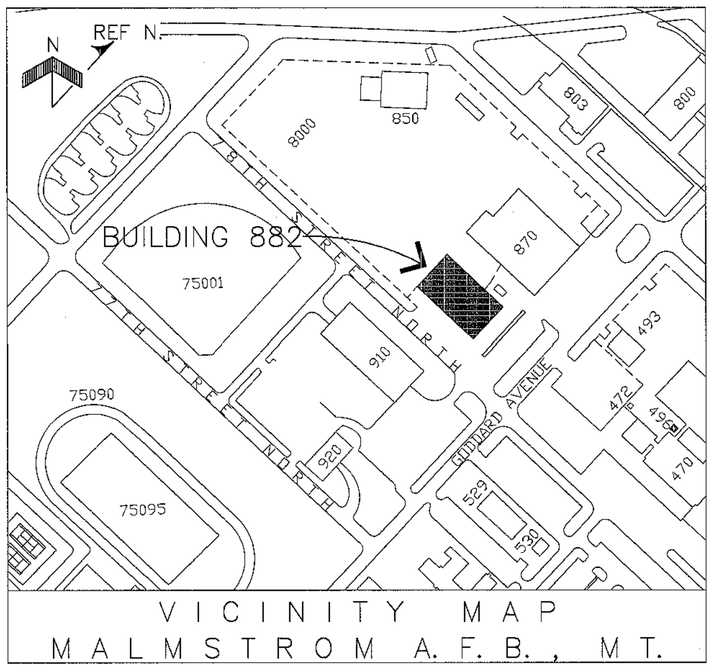

VICINITY MAP
MALMSTROM A. F. B., MT.

CTA ARCHITECTS ENGINEERS

AS BUILT

SPACE COMMAND
MALMSTROM AIR FORCE BASE, MONTANA

OFFICE	SIGNATURE	DATE	OFFICE	SIGNATURE	DATE	OFFICE	SIGNATURE	DATE
BASE CIVIL ENGINEER			CONSTRUCTION MGT.			BIO-ENVIRONMENTAL		
CHIEF ENGINEER			FIRE CHIEF			SAFETY		
PROJECT ENGINEER			ENVIRONMENTAL ENG.			USING AGENCY		

REV.	DATE	DESCRIPTION	DRAWN	APPR'D

DRAWN BY FITZPATRICK
DESIGNED BY FITZPATRICK
REVIEWED BY RADKE

RENOVATION OF TRANSPORTATION FACILITY, BUILDING 882

SCALE NONE | DATE 17NOV97 | PLATE T-1 | PAGE 1 OF 44

PROJECT NUMBER NZAS 93-0107
ACAD DRAWING NUMBER c:\MALMS\93107T01
RECORD FILE NUMBER

882-4-44

RENOVATION OF TRANSPORTATION FACILITY BUILDING 882 (NZAS 93-0107)

ABBREVIATIONS

09511	2X2	2X2 ACOUSTICAL CEILING TILE
05400	AB	AIR BARRIER
08410	AD	ALUMINUM DOOR W/ RELITE (PREFINISHED)
05500	ANG6	6"X6"X3/8" STEEL ANGLE (PAINTED)
07901	APS	ALL PURPOSE SEALANT
–	AS	AIR SPACE
08520	AW	ALUMINUM WINDOW (SEE SHEET A-8)
07550	BA	BONDING ADHESIVE
04200	BB	BOND BEAM
08410	BS	PREFINISHED BREAKSHAPE
09255	CB1	'J' SHAPED GYPSUM CASING BEAD
03300	CF	CONCRETE FOUNDATION (SEE STRUCT)
04200	CMU4	4" CONCRETE MASONRY VENEER (SPLIT FACE) FED COLOR #37056
04200	CMU8	8" CONCRETE MASONRY UNIT
03300	CS	CONCRETE SLAB (SEE STRUCT)
–	E	EXISTING
EAN1	EAN1	1/2"X6" EXPANSION ANCHOR @ 2'-0" O.C.
EAN2	EAN2	1/4"X4" EXPANSION ANCHOR @ 2'-0" O.C.
07550	EPDM	SINGLE PLY ROOFING MEMBRANE
07550	FAS	APPROVED FASTENER
FRP	FRP	FIBER REINFORCED PANELS 4'-0" HIGH WAINSCOTT
02200	GRAV	4" CRUSHED GRAVEL
09255	GYP1	5/8" TYPE 'X' GYPSUM BOARD
09255	HC1	7/8" HAT CHANNELS @ 24" O.C.
07620	HCC	CONTINUOUS HOLD DOWN CLIP
04200	HJR	HORIZONTAL JOINT REINFORCING
08110	HMF	2" EXPANDED POLYSTYRENE INSULATION
07210	INS2	HOLLOW METAL FRAME (GROUT SOLID)
07210	INS3	3 1/2" BATT INSULATION (R-11)
07210	INS6	6" BATT INSULATION (R-19)
07210	INSP	6" POLYISOCYANUTRATE INSULATION (R-38)
07210	INST	TAPERED EXPANDED POLYSTYRENE ROOFING INSULATION
04200	LCF	LAMINATED COPPER FLASHING
05400	MCJ6	6" METAL 'C' JOIST (16 GA 600MJ SECTION)
05400	MCJ8	8" METAL 'C' JOIST (16 GA 800 MJ SECTION)
05310	MD	METAL DECKING (SEE STRUCT)
07412	MP1	PREFINISHED METAL WALL PANELS FED COLOR #37056
07412	MP2	PREFINISHED METAL WALL PANLS FED COLOR #23578
09255	MS2	2 1/2" METAL STUDS @ 16" O.C. (20 GA)
09255	MS3	3 5/8" METAL STUDS @ 16" O.C. (20 GA)
09255	MS6	6" METAL STUDS @ 16" O.C. (20 GA)
05400	MS6S	6" STRUCTURAL METAL STUDS @ 16" O.C. (16 GA)
05400	MS8S	8" METAL STUDS @ 16" O.C. (18 GA)
09255	MZF1	1" METAL "Z" FURRING @ 16" O.C. (25 GA)
PAF	PAF	POWER ACTUATED FASTENERS
07620	PFM	16 GA. PREFIN. METAL FLASHING
07620	PFSMS	16 GA. PREFIN. SHEET METAL SIDING FED COLOR #37056
06100	PLY1	3/4" PLYWOOD
07550	PLY2	1/2" TREATED PLYWOOD
07620	PMC	PREFINISHED METAL COPING
07901	SBR	SEALANT & BACKER ROD
07550	SC	STORM COLLAR
09255	SGC	SUSPENDED 5/8" TYPE 'X' GYPSUM CEILING
07550	SS	SEAM SEALANT
07550	SSC	STAINLESS STEEL CLAMPING RING
09255	ST	SLIP TRACK
05120	STRUCT	SEE STRUCTURAL FOR MEMBER DETAILS
07550	TB	ALUMINUM TERMINATION BAR
TEK	TEK	# 10 TEK SCREWS
06100	TWN	TREATED WOOD NAILER
07550	UFL	UNCURED ROOFING MEMBRANE FLASHING
09255	VR1	VAPOR RETARDER
–	VTR	VENT THRU ROOF

LEGEND

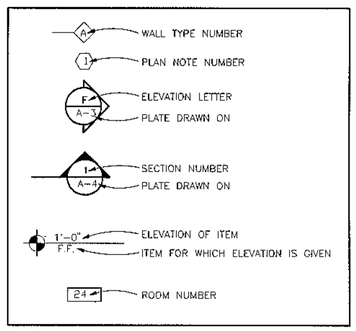

GENERAL NOTES

1. THE REMOVAL/DEMOLITION NOTES LISTED ON THESE SHEETS ARE INTENDED TO CONVEY A GENERAL DESCRIPTION OF THE REMOVAL/DEMOLITION WORK THROUGHOUT THE PROJECT. HOWEVER, THESE NOTES MAY NOT ADDRESS EVERY DEMOLITION CONDITION NECESSARY FOR THE SUCCESSFUL COMPLETION OF THE NEW CONSTRUCTION. THE CONTRACTOR IS RESPONSIBLE TO REMOVE AND/OR DEMOLISH ANY EXISTING CONDITIONS REQUIRED FOR THE SUCCESSFUL INSTALLATION AND ERECTION OF ANY NEW CONSTRUCTION IDENTIFIED IN THESE DOCUMENTS. ANY REMOVAL/DEMOLITION REQUIRED FOR NEW CONSTRUCTION, BUT NOT SPECIFICALLY NOTED, WILL BE ASSIGNED RESPONSIBILITY BY THE GENERAL CONTRACTOR.
2. PROMPTLY REPAIR DAMAGES CAUSED TO ADJACENT FACILITIES/FINISHES BY DEMOLITION OR CONSTRUCTION WORK AT NO ADDITIONAL COST TO THE OWNER.
3. REMOVE DEBRIS FROM SITE IMMEDIATELY AND DISPOSE OF LEGALLY. THE BUILDING AND GROUNDS SHALL BE KEPT CLEAN AND FREE OF REFUSE AT ALL TIMES.
4. WHERE EXISTING EQUIPMENT, PIPING, CEILINGS, DUCTS, ETC. ARE TO BE REMOVED, SUCH REMOVAL SHALL INCLUDE ALL ANCHORS, HANGERS, FRAMING FOUNDATIONS, ETC.
5. PATCH FLOORS, WALLS, AND CEILINGS TO MATCH ADJACENT SURFACES AFTER DEMOLITION OR REMOVAL WORK IN ORDER TO BE READY TO RECEIVE FINAL FINISHES. ALL REMOVAL/DEMOLITION AREAS THAT ADJOIN NEW CONSTRUCTION SHALL BE LEFT READY FOR INSTALLATION OF NEW FINISHES. ALL REQUIRED PATCHING TO LEAVE SURFACES READY FOR NEW FINISHES SHALL BE DONE BY THE CONTRACTOR DURING THE REMOVAL/DEMOLITION PERIOD. THE TERM "MATCH ADJACENT SURFACE" INCLUDES TEXTURE AND FINISH.
6. THESE DOCUMENTS INDICATE CONSTRUCTION MATERIALS AND METHODS OF CONSTRUCTION IN ORDER TO ESTABLISH STANDARDS FOR QUALITY AND/OR PERFORMANCE. MATERIALS AND METHODS OTHER THAN THOSE INDICATED WITHIN THESE DOCUMENTS SHALL BE CONSIDERED FOR ACCEPTENCE BY THE GOVERMENT, PROVIDED THEY DO NOT AFFECT THE APPEARANCE FROM THAT INDICATED WITHIN THESE CONSTRUCTION DOCUMENTS IN ANY WAY WHATSOEVER.
7. THE CONTRACTOR SHALL FIELD VERIFY ALL DIMENSIONS INDICATED WITHIN THESE DOCUMENTS AND SHALL NOTIFY THE CONTRACTING OFFICER OF ANY VARIATION PRIOR TO THE PURCHASING OF MATERIALS, STARTING FABRICATION OR BEGINNING CONSTRUCTION.
8. CONCEAL ALL PIPING CONDUITS, DUCTWORK, ETC. IN ALL FINISHED SPACES

SHEET INDEX

SHT #	SHEET INDEX	PLATE
1	COVER SHEET/SHEET INDEX	T-1
2	SITE PLAN	C-1
3	DEMOLITION FLOOR PLAN	A-1
4	DEMOLITION EXTERIOR ELEVATIONS	A-2
5	REMODEL FLOOR PLAN	A-3
6	ENLARGED PLANS & INTERIOR ELEVATIONS	A-4
7	ENLARGED PLANS & INTERIOR ELEVATIONS	A-5
8	REMODEL EXTERIOR ELEVATIONS	A-6
9	ROOF PLAN	A-7
10	ROOF DETAILS	A-8
11	BUILDING SECTIONS & DETAILS	A-9
12	WALL SECTIONS & DETAILS	A-10
13	WALL SECTIONS & DETAILS	A-11
14	DOOR & WINDOW DETAILS	A-12
15	DOOR SCHEDULE & ELEVATIONS/STAIR DETAILS	A-13
16	FINISH PLAN	A-14
17	REFLECTED CEILING PLAN	A-15
18	CABINET SECTIONS & DETAILS	A-16
19	ASBESTOS ABATEMENT PLANS	A-17
20	FOUNDATION PLAN & DETAILS	S-1
21	ROOF FRAMING PLAN & DETAILS	S-2
22	SECTIONS & DETAILS	S-3

SHT #	SHEET INDEX	PLATE
23	PLUMBING LEGENDS & SCHEDULES	P-1
24	PLUMBING DEMOLITION PLAN	P-2
25	PLUMBING REMODEL PLAN	P-3
26	PLUMBING ENLARGED PLAN & DETAILS	P-4
27	FIRE SPRINKLER LEGENDS, SITE, & SECTIONS	FP-1
28	FIRE SPRINKLER FLOOR PLAN	FP-2
29	MECHANICAL LEGEND & SCHEDULE	M-1
30	MECHANICAL DEMO FLOOR PLAN	M-2
31	MECHANICAL REMODEL FLOOR PLAN	M-3
32	HYDRONIC PIPING PLAN	M-4
33	HVAC SECTIONS & ENLARGED PLANS	M-5
34	HVAC SECTIONS	M-6
35	FLOW DIAGRAMS & ENLARGED MECH. PLANS	M-7
36	HVAC DETAILS	M-8
37	TEMP CONTROL SCHEMATIC DIAGRAM	M-9
38	ELECTRICAL LEGENDS & SCHEDULES	E-1
39	ELECTRICAL DETAILS	E-2
40	ELECTRICAL DEMO PLAN	E-3
41	ELECTRICAL LIGHTING PLAN	E-4
42	ELECTRICAL POWER PLAN	E-5
43	SPECIAL SYSTEMS PLAN	E-6
44	ELECTRICAL SITE PLAN	E-7

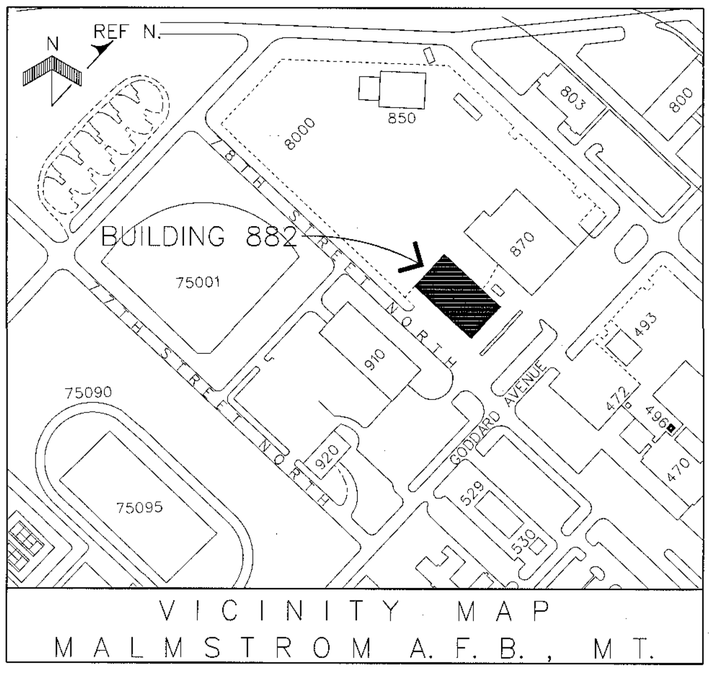

VICINITY MAP
MALMSTROM A. F. B., MT.

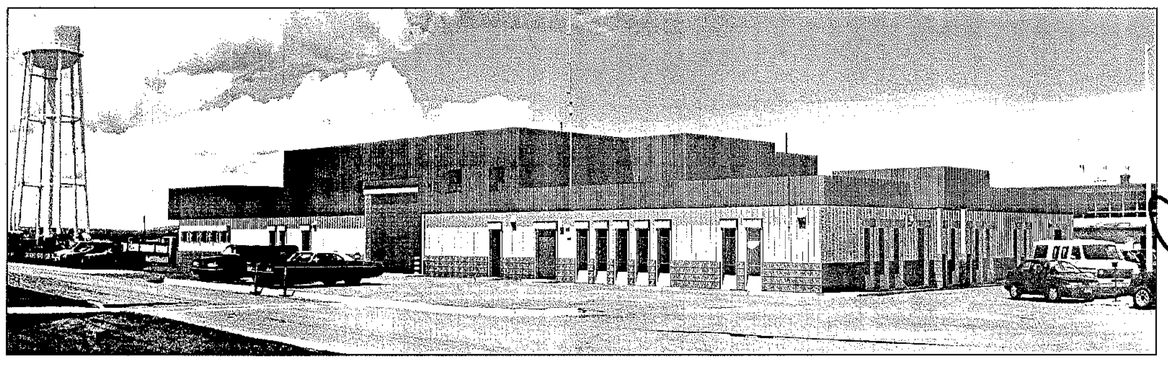

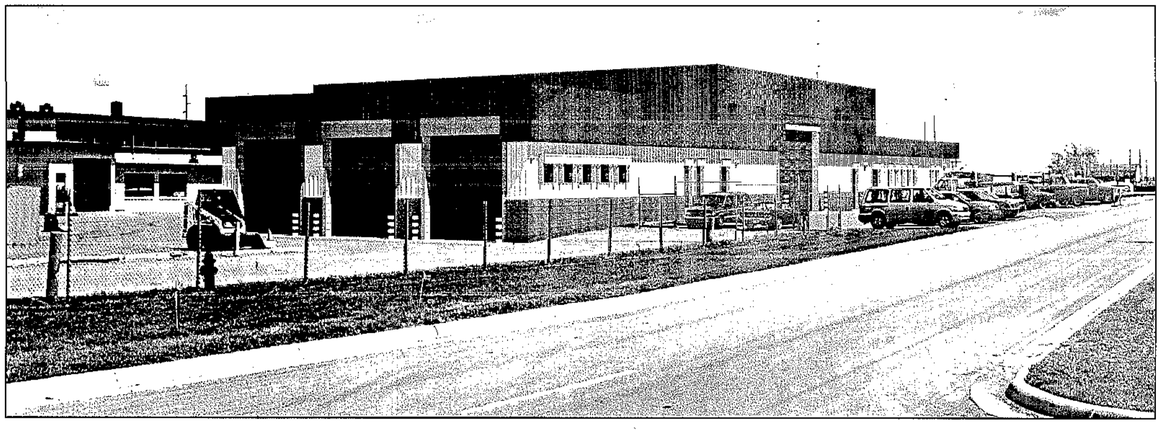

CTA ARCHITECTS ENGINEERS

SPACE COMMAND
MALMSTROM AIR FORCE BASE, MONTANA

OFFICE	SIGNATURE	DATE
BASE CIVIL ENGINEER		5Jan98
CHIEF ENGINEER		16/98
PROJECT ENGINEER		11/23/97
CONSTRUCTION MGT.		9Jan98
FIRE CHIEF		8Jan98
ENVIRONMENTAL ENG		9Jan98
BIO-ENVIRONMENTAL		5Jan98
SAFETY		6Jan98
USING AGENCY		9Jan98

REV.	DATE	DESCRIPTION	DRAWN	APP'D

DRAWN BY FITZPATRICK
DESIGNED BY FITZPATRICK
REVIEWED BY RADKE

RENOVATION OF TRANSPORTATION FACILITY, BUILDING 882

SCALE NONE | DATE 17NOV97 | PLATE T-1 | PAGE 1 OF 44

PROJECT NUMBER NZAS 93-0107
ACAD DRAWING NUMBER 93107101
RECORD FILE NUMBER

(93 F2804 980831 ATTACH 1 980831

Mon Nov 17 13:13:25 1997 H:\DPOS\OTHERS\MALMS\SET_98\A0.dgn BHAGS o:\models\dc\plotglobal\ctb\ctb1.ctb