1. GENERAL INFORMATION

Document Type:	Combined Synopsis/Solicitation
Solicitation Number:	12363N26Q4161
Posted Date:	5/22/2026
Original Response Date:	6/30/2026
Current Response Date:	N/A
Product or Service Code:	Z1LB
Set Aside:	Small Business
NAICS Code:	237310 Highway, Street, and Bridge Construction – $45 Million

Contracting Office Address

USDA Forest Service
Procurement and Property Services
National Stewardship Contracting Branch
1400 Independence Ave. SW, MS-1138
Washington DC 20250-1138

This is a combined synopsis/solicitation for commercial services prepared in accordance with FAR 12. This announcement constitutes the only solicitation; offers are being requested, and a separate written solicitation will not be issued.

Solicitation number 12363N26Q4161 has been issued as a Request for Quotes (RFQ) for the Mark Twain NF Beaver Lake Dam Rehabilitation.

This solicitation incorporates provisions and clauses by reference. The full text of provisions and clauses may be accessed electronically at www.acquisition.gov.

The associated North American Industrial Classification System (NAICS) code for this procurement is 237310 – Highway, Street, and Bridge Construction, with a small business size standard of $45 Million. The product service code is Z1LB. The government intends to award a Firm Fixed Price contract resulting from this combined synopsis/solicitation to the responsible offeror whose offer, conforming to the synopsis/solicitation, will be most advantageous to the government (as determined by the solicitation evaluation criteria). All responsible sources may submit a quotation which will be considered by the agency, and proposals shall be valid for 60 days after the date of receipt for the solicitation.

Points of Contact

Thomas Tran, Contracting Officer, thomas.tran2@usda.gov

Site Visit: Please contact Rachel if you plan on attending the site visit.
Time – May 28, 2026 at 11am CST
Location – Beaver Lake (lat: 36.800194°, long: -90.623668°)
COR – Rachel Uetrecht, 573-308-5798

Offerors shall quote in accordance with the SOW. Please provide your price and technical proposal separately. Technical proposals that fail to adequately address all evaluation factors and criteria may receive a reduced score or may not be considered.

Quotes shall be valid for a minimum of 60 calendar days after submission.

Please label file name by format below:
Company name, price or technical proposal or both and name of project
Ex. USDA Price/Technical Proposal Solicitation #

SOLICITATION, OFFER, AND AWARD (Construction, Alteration, or Repair)	1. SOLICITATION NO. 12363N26Q4161	2. TYPE OF SOLICITATION ☐ SEALED BID (IFB) ☒ NEGOTIATED (RFP)	3. DATE ISSUED 5/22/2026	PAGE OF PAGES

IMPORTANT -- The "offer" section on the reverse must be fully completed by offeror.

4. CONTRACT NO.	5. REQUISITION/PURCHASE REQUEST NO. 1156438	6. PROJECT NO.

7. ISSUED BY CODE 363N

USDA-FS STEWARDSHIP CONTRACTING BR
1400 INDEPENDENCE AVE SW
MS-1138
WASHINGTON DC 20250-1138

8. ADDRESS OFFER TO

USDA-FS STEWARDSHIP CONTRACTING BR
1400 INDEPENDENCE AVE SW
MS-1138
WASHINGTON DC 20250-1138

9. FOR INFORMATION CALL:	a. NAME THOMAS TRAN	b. EMAIL thomas.tran2@usda.gov

SOLICITATION

NOTE: In sealed bid solicitations "offer" and "offeror" mean "bid" and "bidder."

10. THE GOVERNMENT REQUIRES PERFORMANCE OF THE WORK DESCRIBED IN THESE DOCUMENTS *(Title, identifying no., date)*

SOLICITATION FOR PRICING AND TECHNICAL PROPOSALS

1156438 R8 MO Mark Twain NF Beaver Lake Dam Rehab

See Schedule of Items, specific work description, supplemental specifications/terms and conditions, and attachments that apply to the work. These terms supplement the base IDIQ terms and conditions.
**ALL DOCUMENTS, INCLUDING A SCANNED COPY OF THE FULLY EXECUTED BID BOND IF REQUIRED, SHALL BE SUBMITTED ELECTRONICALLY TO THOMAS TRAN AT thomas.tran2@usda.gov AND RECEIVED BY THE DEADLINE IN BLOCK 13.

11. The Contractor shall begin performance upon receipt of notice to proceed and shall be completed no later than December 31, 2026.

This performance period is ☒ mandatory ☐ negotiable. (See FAR Clause 52.211-10)

12a. THE CONTRACTOR MUST FURNISH ANY REQUIRED PERFORMANCE AND PAYMENT BONDS? *(If "YES", indicate within how many calendar days after award in Item 12b.)*	☒ YES ☐ NO	12b. CALENDAR DAYS 10

13. ADDITIONAL SOLICITATION REQUIREMENTS

a. Offers to perform the work specified in Item 10 shall be submitted by 11:00 am CDT, June 30, 2026. If this is a sealed bid solicitation, offers must be publicly opened at that time. Sealed envelopes containing bid bonds shall be marked to show the offeror's name and address, the solicitation number, and the date and time offers are due.

b. An offer guarantee ☒ is, ☐ is not required. **(If total price exceeds $150,000 - see page 5)**

c. All offers are subject to the (1) work requirements, and (2) other provisions and clauses incorporated in the solicitation in full text or by reference.

d. Offers providing less than 30 calendar days for Government acceptance after the date offers are due will not be considered and will be rejected .

OFFER *(Must be fully completed by offeror)*

14. NAME AND ADDRESS OF OFFEROR *(Include ZIP Code)*

15. TELEPHONE NO. *(Include area code)*

16. REMITTANCE ADDRESS *(Include only if different than item 14.)*

CODE FACILITY CODE

17. The offeror agrees to perform the work required at the prices specified below in strict accordance with the terms of this solicitation, if this offer is accepted by the Government in writing within _____ calendar days after the date offers are due. *(Insert any number equal to or greater than the minimum requirement stated in item 13d. Failure to insert any number means the offeror accepts the minimum in item 13d.)*

AMOUNTS

18. The offeror agrees to furnish any required performance and payment bonds.

19. ACKNOWLEDGEMENT OF AMENDMENTS

(The offeror acknowledges receipt of amendments to the solicitation -- give number and date of each)

AMENDMENT NO.										
DATE.										

20a. NAME AND TITLE OF PERSON AUTHORIZED TO SIGN OFFER *(Type or print)*

20b. SIGNATURE

20c. OFFER DATE

AWARD *(To be completed by Government)*

21. ITEMS ACCEPTED:

Continued...

22. AMOUNT

23. ACCOUNTING AND APPROPRIATION DATA

See schedule

24. SUBMIT INVOICES TO ADDRESS SHOWN IN *(4 copies unless otherwise specified)*

ITEM

25. OTHER THAN FULL AND OPEN COMPETITION PURSUANT TO

☐ 10 U.S.C. 2304(c) ( ) ☒ 41 U.S.C. 3304(a) ( )

26. ADMINISTERED BY CODE 363N

USDA-FS STEWARDSHIP CONTRACTING BR
1400 INDEPENDENCE AVE SW
MS-1138
WASHINGTON DC 20250-1138

27. PAYMENT WILL BE MADE BY

INVOICE PROCESSING PLATFORM IPP
ALL INVOICES MUST BE SUBMITTED
ELECTRONICALLY THROUGH THE
INVOICE PROCESSING PLATFORM IPP
VIA WWW IPP GOV

CONTRACTING OFFICER WILL COMPLETE ITEM 28 OR 29 AS APPLICABLE

☒ 28. NEGOTIATED AGREEMENT

(Contractor is required to sign this document and return _____ copies to issuing office.)

Contractor agrees to furnish and deliver all items or perform all work requirements identified on this form and any continuation sheets for the consideration stated in this contract. The rights and obligations of the parties to this contract shall be governed by (a) this contract award, (b) the solicitation, and (c) the clauses, representations, certifications, and specifications incorporated by reference in or attached to this contract.

☐ 29. AWARD

(Contractor is not required to sign this document.)

Your offer on this solicitation is hereby accepted as to the items listed. This award consummates the contract, which consists of (a) the Government solicitation and your offer, and (b) this contract award. No further contractual document is necessary.

30a. NAME AND TITLE OF CONTRACTOR OR PERSON AUTHORIZED TO SIGN *(Type or print)*

31a. NAME OF CONTRACTING OFFICER *(Type or print)*

THOMAS T. TRAN

30b. SIGNATURE

30c. DATE

31b. UNITED STATES OF AMERICA

BY

31c. DATE

Payment will be made via EFT. Invoice using IPP.Gov						
Set Aside For:	Large	Small	Woman-Owned	SDVOSB	Hubzone	8(a)
(Please check all that apply)		X				

MUST HAVE ALL INFO BELOW	
Company Name:	
Vendor Rep:	
Phone:	
Email:	
Mailing Address:	
UEI SAM #	

Estimated Period of Performance 07/15/2026 – 12/31/2026

Contractor Signature: _____

Contractor Parent BPA/IDIQ #: _____

****QUOTES ARE DUE BY: 06/30/2026 by 11:00AM CST****

Questions are due 06/02/2026 by COB

SECTION B SCHEDULE OF ITEMS

BEAVER LAKE DAM REHABILITATION

POPLAR BLUFF RANGER DISTRICT
MARK TWAIN NATIONAL FOREST
STATE OF MISSOURI

BASE BID ESTIMATE

FP-14 Section Pay Item	Description	Estimated Qty	Unit	Total Price
151	Mobilization and Demobilization	1	LS	$_____
152	Construction Surveying & Staking	1	LS	$_____
153	Contractor Quality Control	1	LS	$_____
154	Sec 204 Sampling & Testing - Excavation & Embankment (Per FP-14 Table 204-1)	1	LS	$_____
154	Sec 209 Sampling & Testing - Structure Excavation & Backfill (Per FP-14 Table 209-1)	1	LS	$_____
155	Schedules for Construction Contracts	1	LS	$_____
157	Soil Erosion and Sediment Control, Lake Drawdown and/or Cofferdam	1	LS	$_____
201	Clearing and Grubbing	1	LS	$_____
203	Removal of Structures & Obstructions (Removal and Remediation of Existing Drain Structure and Undermining)	1	LS	$_____
251	Class 3 Riprap (Spillway Channel)	400	CY	$_____
624/625	Topsoil and Turf Establishment	1	LS	$_____
	TOTAL BASE BID ESTIMATE			$_____

OPTIONAL BID ITEM 1 – 30" RCPP LEVEL CONTROL PIPE

FP-14 Section Pay Item	Description	Estimated Qty	Unit	Total Price
152	Construction Surveying & Staking	1	LS	$_____
154	Sec 601 & 614 Sampling & Testing - Cast-in-place Concrete (Per FP-14 Table 552-9; Only Compressive Strength on 3 Test Cylinders: 1 @ 7 & 2@ 28 days)	1	LS	$_____
201	Clearing and Grubbing	1	LS	$_____
252	Rockery (Outfall Pipe Plunge Pool)	10	CY	$_____
601	Minor Concrete Structures (30" FES AND Outfall Headwall)	1	LS	$_____
602	Culverts & Drains (30" Low Pressure Concrete Pipe) With Lean Concrete Bedding/Cradle.	150	LF	$_____
717	Structural Metal (30" Rodent Protection and Trash Rack)	1	LS	$_____
	TOTAL OBI 1 ESTIMATE			$_____

OPTIONAL BID ITEM 2 – 30" RCPP LEVEL CONTROL PIPE WITH 18" RCPP AND SLUICE GATE DRAWDOWN STRUCTURE

FP-14 Section Pay Item	Description	Estimated Qty	Unit	Total Price
152	Construction Surveying & Staking	1	LS	$_____
154	Sec 204 Sampling & Testing - Excavation & Embankment (Per FP-14 Table 204-1)	1	LS	$_____
154	Sec 209 Sampling & Testing - Structure Excavation & Backfill (Per FP-14 Table 209-1)	1	LS	$_____
154	Sec 601 & 614 Sampling & Testing - Cast-in-place Concrete (Per FP-14 Table 552-9; Only Compressive Strength on 3 Test Cylinders: 1 @ 7 & 2@ 28 days)	1	LS	$_____
209	Structure Excavation & Backfill	40	CY	$_____
252	Rockery (Outfall Pipe Plunge Pool)	10	CY	$_____
601	Minor Concrete Structures (30" FES AND Outfall Headwall)	1	LS	$_____
602	Culverts & Drains (18" Low Pressure Concrete Pipe) With	50	LF	$_____

FP-14 Section Pay Item	Description	Estimated Qty	Unit	Total Price
	Lean Concrete Bedding/Cradle.			
602	Culverts & Drains (30" Low Pressure Concrete Pipe) With Lean Concrete Bedding/Cradle.	86	LF	$_____
604	Manholes, Inlets & Catch Basins (Lake Drawdown Structure With Sluice Gate)	1	EA	$_____
605	Underdrains, Sheet Drains, and Pavement Edge Drains (Granular Filter Drain)	25	LF	$_____
624/625	Topsoil and Turf Establishment	1	LS	$_____
717	Structural Metal (18" Rodent Protection and Trash Rack)	1	LS	$_____
717	Structural Metal (30" Rodent Protection and Trash Rack)	1	LS	$_____
	TOTAL OBI 2 ESTIMATE			$_____

Total Contract Award (Base + Option 1 and Option 2) =_____

EVALUATION CRITERIA:

TECHNICAL PROPOSAL INSTRUCTIONS

General
Proposals shall be submitted in two parts: a technical proposal and a price proposal. Each part shall be separate and complete in itself so that evaluation of one may be accomplished independently of the other. The price proposal shall be submitted with the solicitation forms.

Offerors are cautioned that sufficient and detailed information must be presented in their proposals to enable the Government to evaluate their proposals fully in accordance with the evaluation and award criteria contained herein. The Government is not obligated to ask for additional information and in the absence of appropriate information, the proposal will be rated deficient.

Price Proposal
A completed schedule of items with pricing information completes this requirement.

Technical Proposal
Offerors shall submit technical information for their firm and any proposed major subcontractors. Please submit your past performance with the technical information. Also, the offeror shall submit information that illustrates a technical understanding of the work to be performed.

1) Relevant Past Performance:
Relevant Past Performance shall be obtained from previous work with the Federal Government and utilized for evaluation on this contract. Please provide at least 3 past performances with references.

2) Technical Approach:
All offerors should show a high level of understanding of the work to be performed. This can be accomplished by submitting with the proposal the following information:

1. Description of how the work will be performed
2. Schedule (accomplishing work while meeting weather conditions)
3. Key Personnel
4. List of equipment to be used

3) Experience/Qualification:
The Offeror will be evaluated on the experience and qualifications of their company and personnel.

Technical Evaluation Criteria
Technical proposals will be evaluated and rated by a Technical Evaluation Panel. Proposals shall be prepared in accordance with the proposal preparation instructions. The Government intends to evaluate quotations using a comparative evaluation methodology. This means quotations will be compared against one another to determine which provides the best value to the Government, based on the evaluation factors outlined in this solicitation.

The Government may consider quotations that exceed minimum requirements and offer additional value or benefits, even if they are not the lowest priced.

1) Relevant Past Performance:
a) Relevant Past Performance shall be provided and utilized for evaluation on this contract.

2) Technical Approach:
b) Understanding of Proposed Work: Offeror demonstrates a technical understanding of the proposed work including but not limited to preliminary scheduling, equipment requirements, site conditions and location, project challenges, and material requirements.

3) Experience/Qualification:
Evaluates the company's history, background, and ability to perform work of similar size, scope, and complexity. Specialized work and accomplishments relative to the scope of work.

4) Acceptability:
An offeror's documented response to the solicitation will not be deemed acceptable, if not received by the specified closing date and time, and the submitted proposal not clearly demonstrate the offerors understanding the needed work. In such cases the offeror will be viewed as having "failed" this criterion and will not be considered for award.

5) Cost or Price:
Each acceptable offer will be evaluated for reasonableness of proposal price. This criterion will include consideration of cost information provided. It is the Government's intent to assess the unit prices to determine reasonableness and offeror's understanding of the work and ability to perform the contract. The importance of price may become greater as the differences between technical proposals decrease. Where technical proposals are determined to be substantially equal, price may control award.

(b) Award. A written notice of award or acceptance of an offer, mailed or otherwise furnished to the successful offeror within the time for acceptance specified in the offer, shall result in a binding contract without further action by either party. Before the offer's specified expiration time, the Government may accept an offer (or part of an offer), whether or not there are negotiations after its receipt, unless a written notice of withdrawal is received before award.

United States Department of Agriculture
Forest Service

STATE OF MISSOURI
BUTLER COUNTY
EASTERN REGION
MARK TWAIN NATIONAL FOREST
POPLAR BLUFF RANGER DISTRICT

BEAVER LAKE DAM REHABILITATION

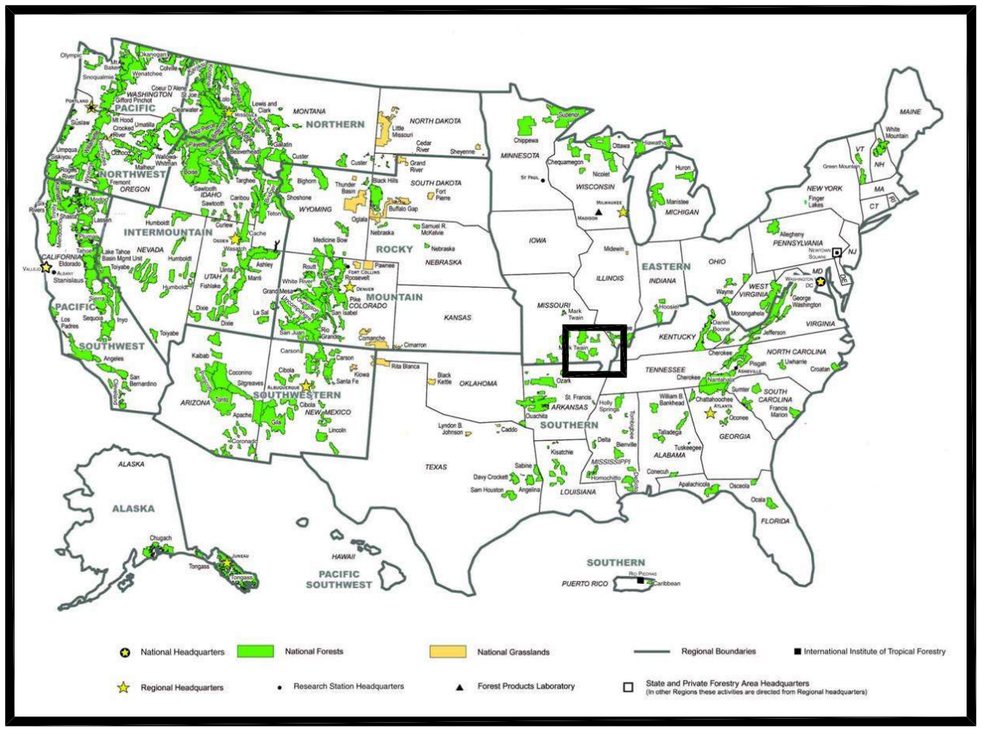

FOREST LOCATION MAP

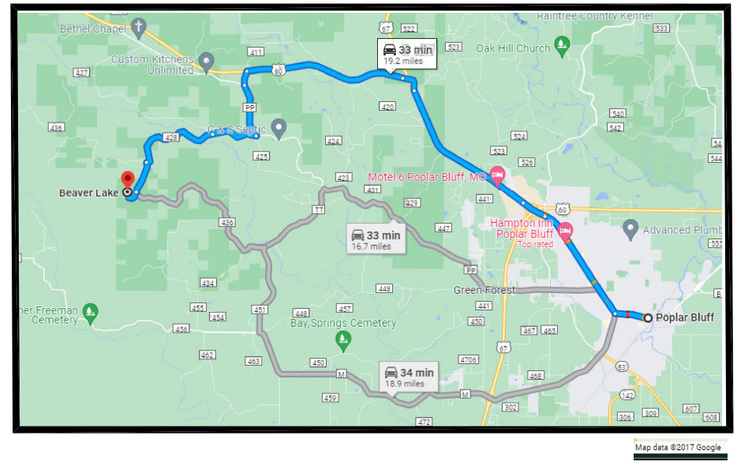

PROJECT LOCATION MAP

TRAVEL DIRECTIONS:

FROM POPLAR BLUFF TAKE US-60W TO C.R. 411/HWY PP (8.8 MI). TURN LEFT ON 411/PP AND PROCEED 1.6 MILES. TURN RIGHT ON C.R. 435 THEN IMMEDIATELY RIGHT AGAIN ON C.R. 426 FOR 1.2 MILES. AT TEE, STAY STRAIGHT ON C.R.428 FOR 2.4 MILES. AT TEE, TURN LET ON C.R. 436 FOR 0.8 MILES.TURN RIGHT ONTO FSR 3899 AND PROCEED 0.3 MILES TO BEAVER LAKE.
36.801777 N, 90.622492 W.

INDEX OF SHEETS

SHEET	SHEET TITLE	DATE
G-01	COVERSHEET	05/01/26
C-01	OVERALL PLAN	05/01/26
C-02	EXISTING CONDITIONS & BASE BID	05/01/26
C-03	OBI-1 30" LC PIPE	05/01/26
C-04	OBI-2 30" LC PIPE & 18" GATE	05/01/26
C-05	DETAILS	05/01/26
C-06	DETAILS	05/01/26
C-07	DETAILS	05/01/26

RECOMMENDED BY:

FOREST ENGINEER _____ DATE _____

DISTRICT RANGER _____ DATE _____

FOREST SUPERVISOR _____ DATE _____

RO DAM PROGRAM MANAGER _____ DATE _____

APPROVED:

DIRECTOR OF ENGINEERING _____ DATE _____

SHEET 1 OF 7

5/1/26 10:43 ROBERTCONAWAY C:\ PROJECTS\POPLAR BLUFF\BEAVER LAKE\DRAWINGS\BEAVER LAKE MOD 01-2026.DWG;

Cut/Fill Summary - SPILLWAY RIPRAP

Name	Cut	Fill	Net
SPILL GRADE (1)	53.28 Cu. Yd.	406.78 Cu. Yd.	353.49 Cu. Yd.<Fill>
Totals	53.28 Cu. Yd.	406.78 Cu. Yd.	353.49 Cu. Yd.<Fill>

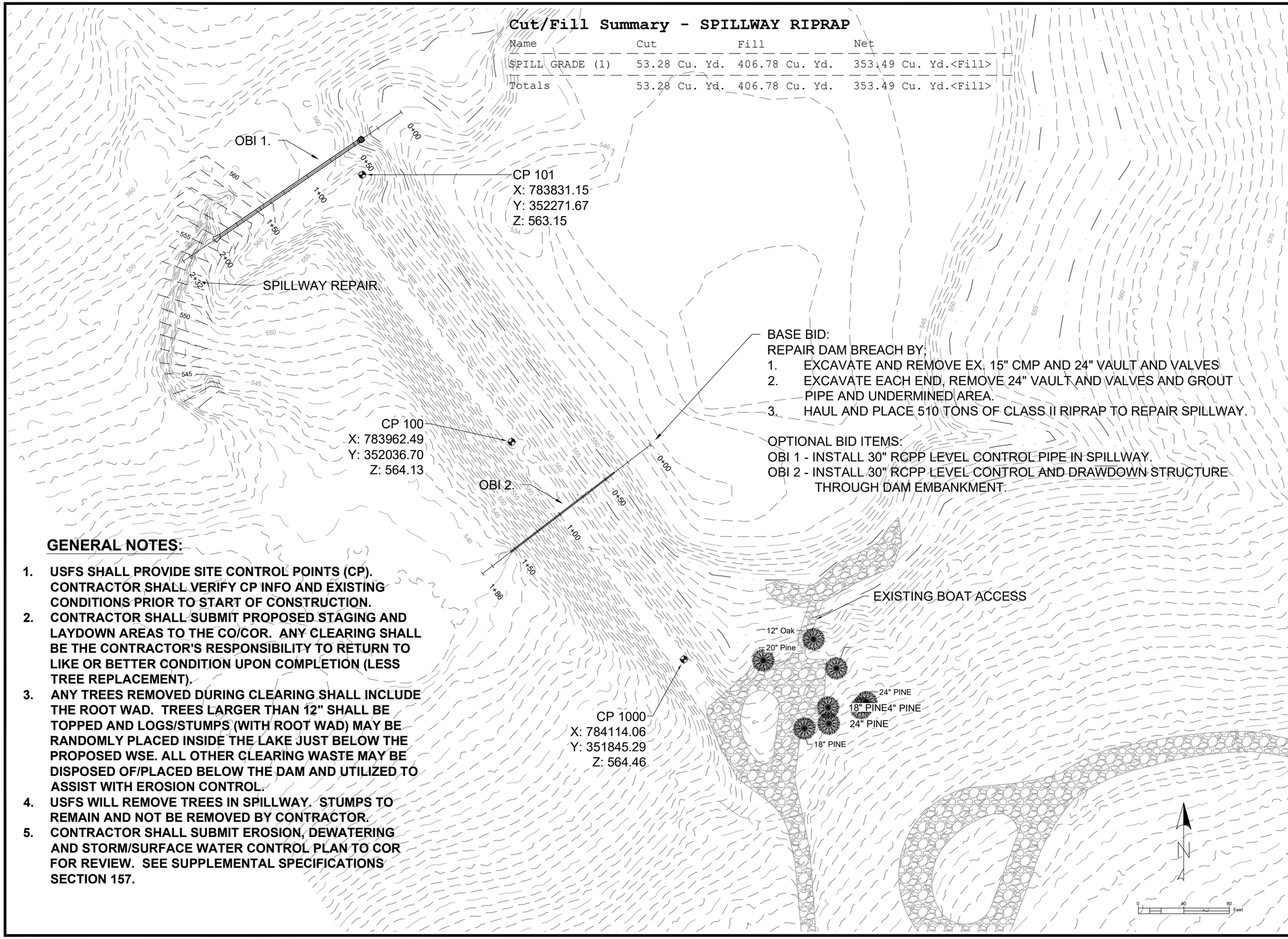

BASE BID:
REPAIR DAM BREACH BY;
1. EXCAVATE AND REMOVE EX. 15" CMP AND 24" VAULT AND VALVES
2. EXCAVATE EACH END, REMOVE 24" VAULT AND VALVES AND GROUT PIPE AND UNDERMINED AREA.
3. HAUL AND PLACE 510 TONS OF CLASS II RIPRAP TO REPAIR SPILLWAY.

OPTIONAL BID ITEMS:
OBI 1 - INSTALL 30" RCPP LEVEL CONTROL PIPE IN SPILLWAY.
OBI 2 - INSTALL 30" RCPP LEVEL CONTROL AND DRAWDOWN STRUCTURE THROUGH DAM EMBANKMENT.

GENERAL NOTES:

1. USFS SHALL PROVIDE SITE CONTROL POINTS (CP). CONTRACTOR SHALL VERIFY CP INFO AND EXISTING CONDITIONS PRIOR TO START OF CONSTRUCTION.
2. CONTRACTOR SHALL SUBMIT PROPOSED STAGING AND LAYDOWN AREAS TO THE CO/COR. ANY CLEARING SHALL BE THE CONTRACTOR'S RESPONSIBILITY TO RETURN TO LIKE OR BETTER CONDITION UPON COMPLETION (LESS TREE REPLACEMENT).
3. ANY TREES REMOVED DURING CLEARING SHALL INCLUDE THE ROOT WAD. TREES LARGER THAN 12" SHALL BE TOPPED AND LOGS/STUMPS (WITH ROOT WAD) MAY BE RANDOMLY PLACED INSIDE THE LAKE JUST BELOW THE PROPOSED WSE. ALL OTHER CLEARING WASTE MAY BE DISPOSED OF/PLACED BELOW THE DAM AND UTILIZED TO ASSIST WITH EROSION CONTROL.
4. USFS WILL REMOVE TREES IN SPILLWAY. STUMPS TO REMAIN AND NOT BE REMOVED BY CONTRACTOR.
5. CONTRACTOR SHALL SUBMIT EROSION, DEWATERING AND STORM/SURFACE WATER CONTROL PLAN TO COR FOR REVIEW. SEE SUPPLEMENTAL SPECIFICATIONS SECTION 157.

United States Department of Agriculture
Forest Service

R09
EASTERN REGION

STAMPS, LOGOS, AND SEALS

NO.	REVISION / ISSUE	DATE
4		
3		
2		
1		

PROJECT NAME

BEAVER LAKE DAM REHABILITATION

MARK TWAIN NATIONAL FOREST

POPLAR BLUFF RANGER DISTRICT

DRAWING TITLE

OVERALL PLAN

DATE 05-01-2026	ARCHIVE NO.
DESIGNER RKC	DRAWING SHEET NO. C-01
DRAWN RKC	
CHECKED AW	
PROJECT NO.	SHEET 2 OF 8

5/1/26 10:43 ROBERT.CONAWAY C:_PROJECTS\POPLAR BLUFF\BEAVER LAKE\DRAWINGS\BEAVER LAKE MOD 01-2026.DWG;

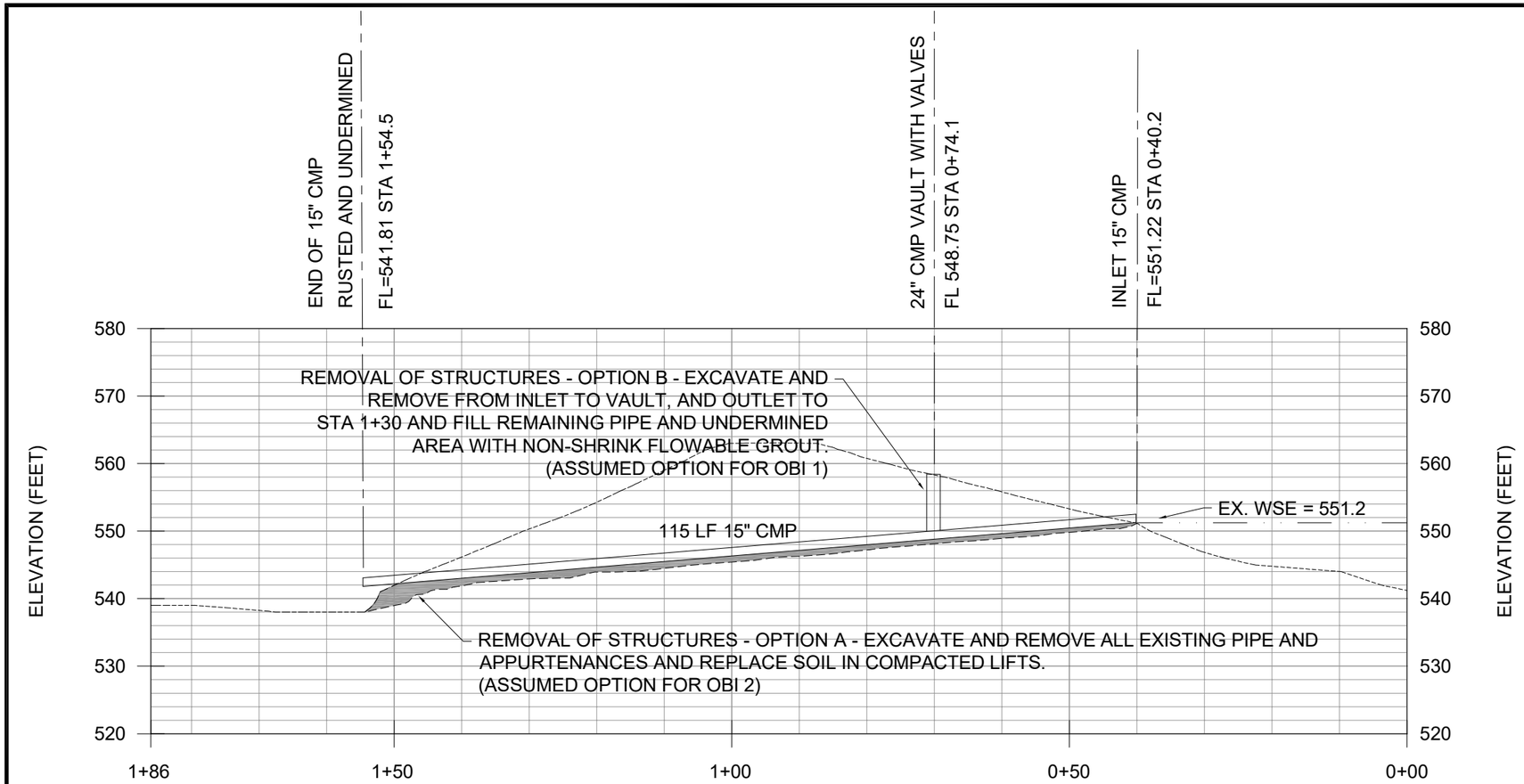

EXISTING PIPE PROFILE

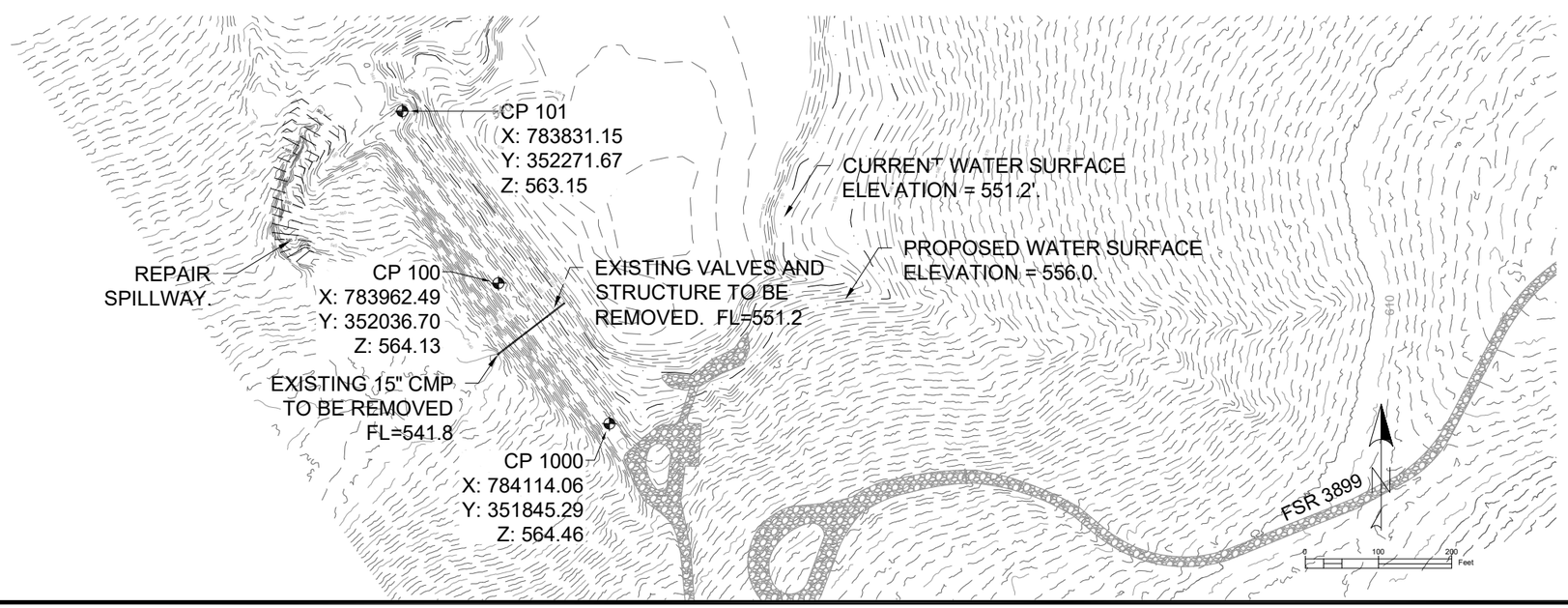

STANDARD LEGEND

- POWER POLE & GUY WIRE
- LIGHT POLE
- AREA LIGHT
- FLOOD LIGHT
- TELEPHONE MANHOLE
- TELEPHONE PEDESTAL
- CABLE MARKER
- CABLE TV PEDESTAL
- ELECTRIC METER
- ELECTRIC BOX
- ELECTRICAL MANHOLE
- TRAFFIC CONTROL BOX
- TRAFFIC STANDARD
- WATER METER
- WATER WELL
- FIRE HYDRANT
- WATER MANHOLE
- WATER VALVE
- WATER SPRINKLER
- IRRIGATION CONTROL VALVE
- STORM SEWER MANHOLE
- CLEANOUT
- SANITARY SEWER MANHOLE
- SIGN
- GAS DRIP
- GAS METER
- GAS VALVE
- MAILBOX
- BOLLARD
- PARKING METER
- EX CONCRETE PAVING
- EX ASPHALT PAVING
- EX GRANULAR PAVING
- PROPOSED CONCRETE PAVING
- PROPOSED ASPHALT PAVING
- PROPOSED GRANULAR PAVING
- EX 1' CONTOUR
- EX 5' CONTOUR
- EX RIGHT-OF-WAY
- EX PROPERTY LINE (APPROXIMATE)
- EX EASEMENT LINE
- EX EDGE OF WATER
- EX OVERHEAD ELECTRIC
- EX UNDERGROUND ELECTRIC
- EX UNDERGROUND TELEPHONE
- EX UNDERGROUND CABLE
- EX SANITARY SEWER
- EX FORCE MAIN
- EX WATER LINE
- EX NATURAL GAS
- EX STORM PIPE
- EX BARBED WIRE FENCE
- EX CHAIN LINK FENCE
- EX WOOD FENCE
- EX GUARD RAIL
- EX BUILDING LINE
- PROPOSED 1' CONTOUR
- PROPOSED 5' CONTOUR
- PROPOSED STORM PIPE
- PROPOSED SANITARY SEWER
- PROPOSED FORCE MAIN
- PROPOSED WATER LINE
- PROPOSED GAS LINE
- PROPOSED SILT FENCE
- PROPOSED INLET PROTECTION
- PROPOSED PAD MOUNTED TRANSFORM
- PROPOSED STREET LIGHT
- PROPOSED FIRE HYDRANT
- PROPOSED WATER VALVE
- PROPOSED WATER METER
- PROPOSED CLEANOUT
- PROPOSED SANITARY SEWER MANHOL
- CONTROL POINT

CL	CENTERLINE
CMP	CORRUGATED METAL PIPE
CMU	CONCRETE MASONRY UNIT
CP	CONTROL POINT
CO	CONTRACTING OFFICER
CONC	CONCRETE
COR	CO REPRESENTATIVE
DIA	DIAMETER
EX	EXISTING
FL	FLOW LINE
FSR	FOREST SERVICE ROAD
LC	LEVEL CONTROL
MFR	MANUFACTURER
OBI	OPTIONAL BID ITEM
RCPP	REINFORCED CONCRETE PRESSUR
STA	STATION
WSE	WATER SURFACE ELEVATION

United States Department of Agriculture
Forest Service

R09
EASTERN REGION

STAMPS, LOGOS, AND SEALS

NO.	REVISION / ISSUE	DATE
4		
3		
2		
1		

PROJECT NAME

BEAVER LAKE DAM REHABILITATION

MARK TWAIN NATIONAL FOREST

POPLAR BLUFF RANGER DISTRICT

DRAWING TITLE

EXISTING CONDITIONS & BASE BID

DATE 05-01-2026	ARCHIVE NO.
DESIGNER RKC	DRAWING SHEET NO. C-02
DRAWN RKC	
CHECKED AW	
PROJECT NO.	SHEET 2 OF 8

5/1/26 10:53 ROBERT CONAWAY C:_PROJECTS\POPLAR BLUFF\BEAVER LAKE\DRAWINGS\BEAVER LAKE MOD 01-2026.DWG;

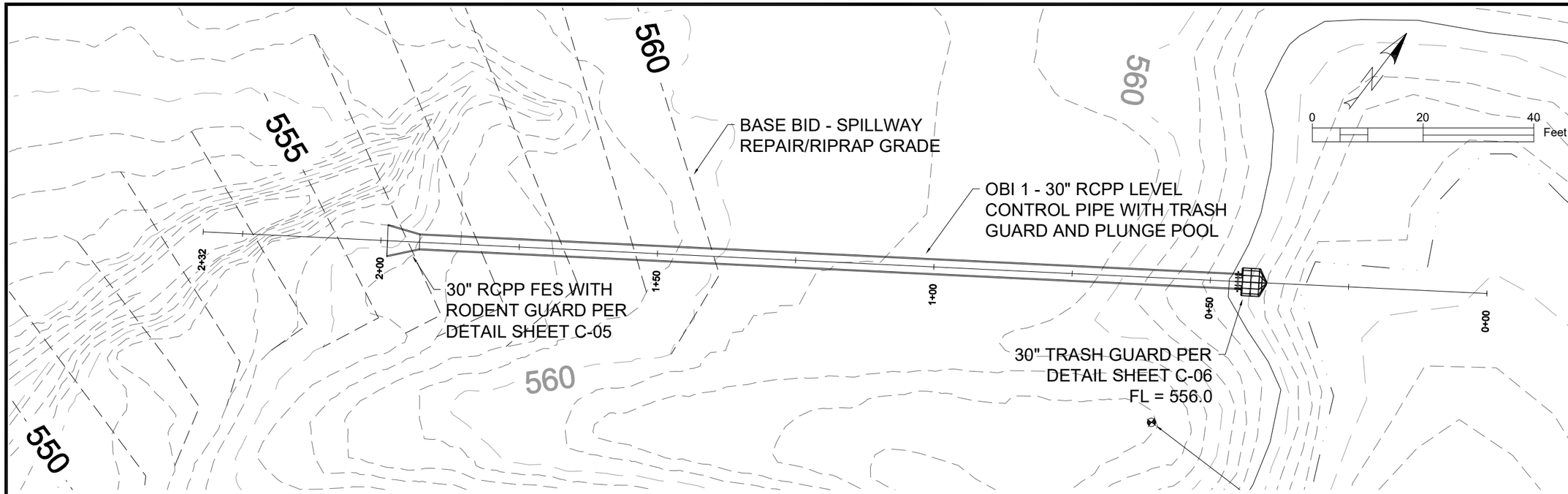

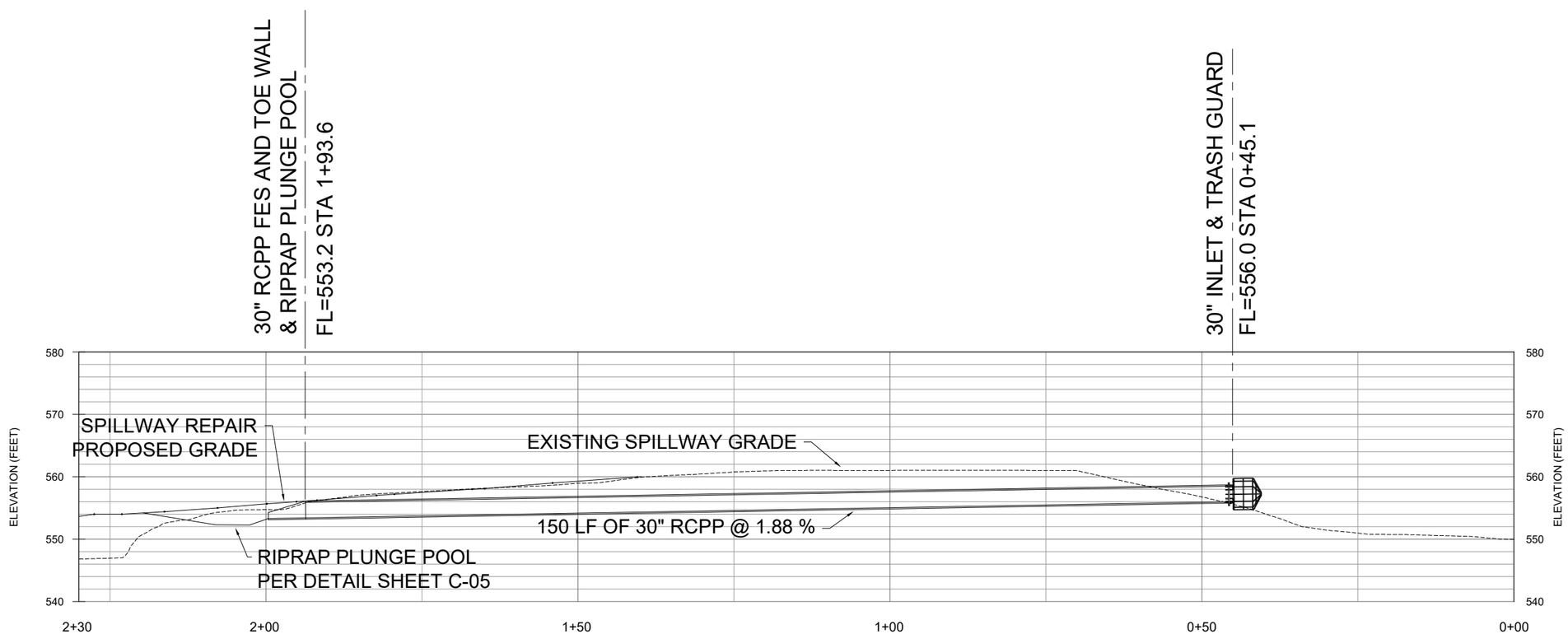

LC 30 PIPE PROFILE

USDA FOREST SERVICE

United States Department of Agriculture
Forest Service

R09
EASTERN REGION

STAMPS, LOGOS, AND SEALS

NO.	REVISION / ISSUE	DATE
4		
3		
2		
1		

PROJECT NAME

BEAVER LAKE DAM REHABILITATION

MARK TWAIN NATIONAL FOREST

POPLAR BLUFF RANGER DISTRICT

DRAWING TITLE

OBI-1
30" LC PIPE

DATE 05/01/2026	ARCHIVE NO.
DESIGNER RKC	DRAWING SHEET NO. C-03
DRAWN RKC	
CHECKED AW	
PROJECT NO.	SHEET 4 OF 8

5/1/26 10:58 ROBERTCONAWAY C:_PROJECTS\POPLAR BLUFF\BEAVER LAKE\DRAWINGS\BEAVER LAKE MOD 01-2026.DWG;

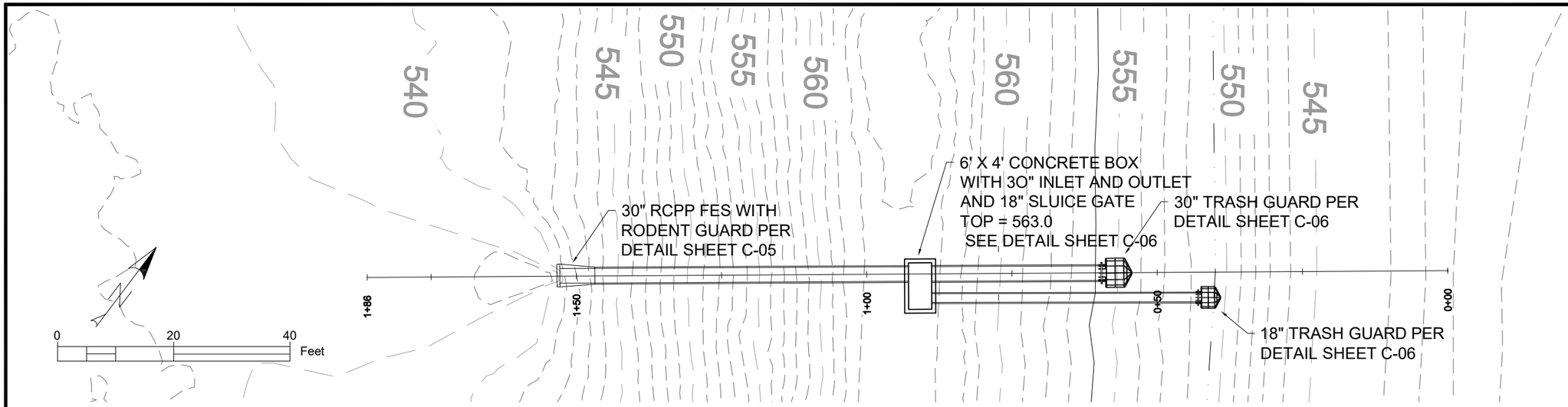

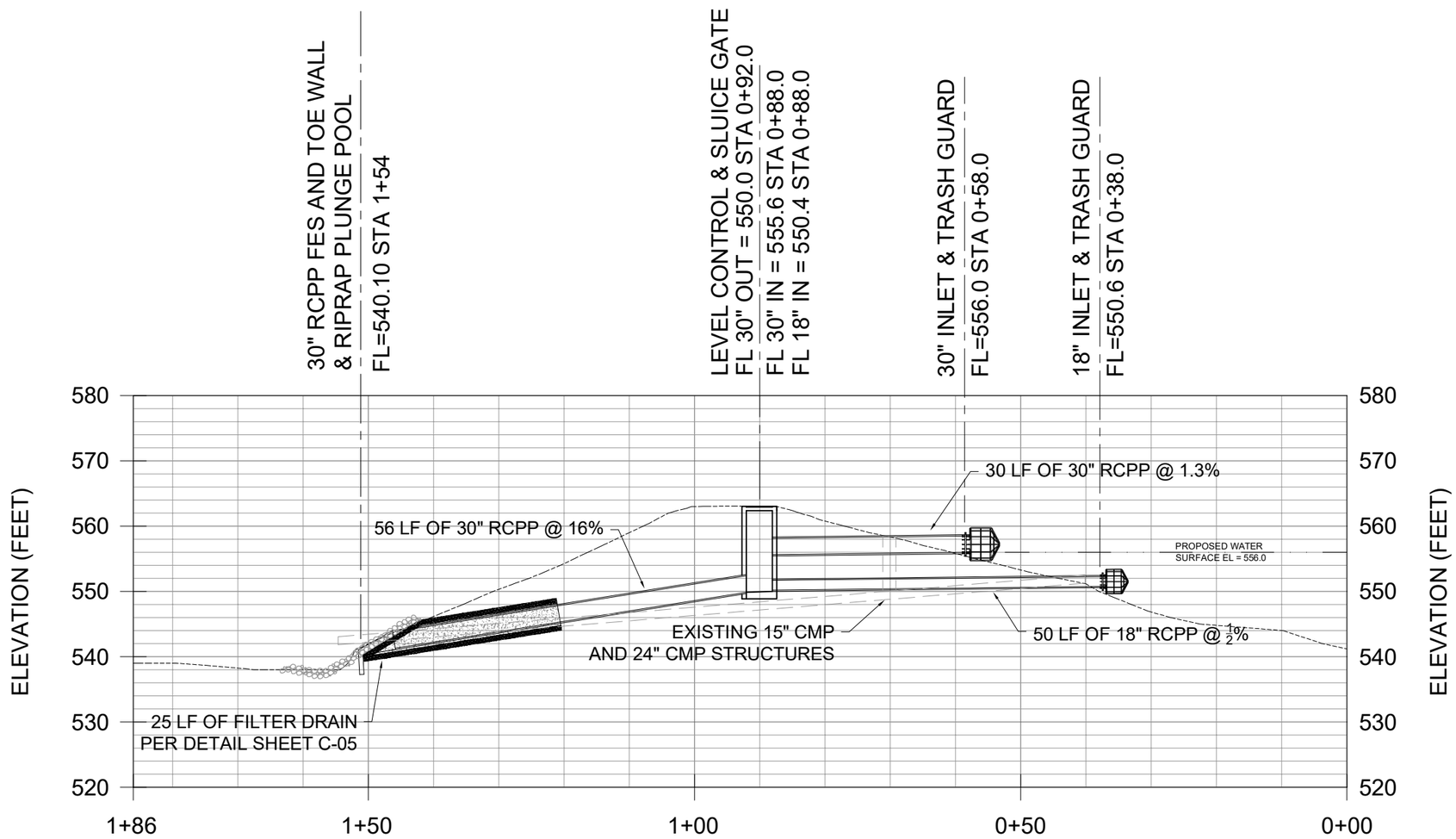

United States Department of Agriculture
Forest Service

R09
EASTERN REGION

STAMPS, LOGOS, AND SEALS

NO.	REVISION / ISSUE	DATE
4		
3		
2		
1		

PROJECT NAME

BEAVER LAKE DAM REHABILITATION

MARK TWAIN NATIONAL FOREST

POPLAR BLUFF RANGER DISTRICT

DRAWING TITLE

OBI-2
30" LC PIPE & 18" GATE

DATE 05-01-2026	ARCHIVE NO.
DESIGNER RKC	DRAWING SHEET NO. C-04
DRAWN RKC	
CHECKED AW	
PROJECT NO.	SHEET 4 OF 8

5/1/26 10:58 ROBERTCOMAWAY C:_PROJECTS\POPLAR BLUFF\BEAVER LAKE\DRAWINGS\BEAVER LAKE MOD 01-2026.DWG;

Manufactured by:
Agri Drain CORPORATION
PO Box 458 · 1462 340th Street · Adair, Iowa 50002
Phone: 1-800-232-4742 · Fax: 1-800-282-3353
www.agridrain.com · email: info@agridrain.com

Rat Guards™

Avoid irritating and costly plugged drainage systems with stainless steel Rat Guards and zinc dichromate-plated mild steel Rat Guards.

Rat Guard, Stainless Steel

- 304 stainless steel material and hardware provides extended life.
- 4" and 6" Stainless Steel Rat Guards are Iowa DOT approved.
- Resists rust and corrosion.
- Easy to install. Position far enough in the pipe to allow it to swivel up and let trash pass without exposing the Rat Guard beyond the pipe.
- 18" and 24" Rat Guards are held in place with a steel rod (included) which extends through the frame and then through the pipe. The rod extends approximately 1" on either side of frame.

Discount available when purchased in case quantity. Cases available on 4"–100 per case, 6"–100 per case, 8"–50 per case, 10"–30 per case, 12"–20 per case, and 15"–10 per case.

All bars are MIG welded on both sides.

Rat Guard, Mild Steel

- Zinc dichromate plating resists corrosion.
- Easy to install. Position far enough in the pipe to allow it to swivel up and let trash pass without exposing the Rat Guard beyond the pipe.
- 18" through 60" Rat Guards are held in place with a steel rod (included) which extends through the frame and then through the pipe. Rod extends approximately 1" on either side of frame.

Discount available when purchased in case quantity. Cases available on 4"–100 per case, 6"–100 per case, 8"–50 per case, 10"–30 per case, 12"–20 per case, and 15"–10 per case.

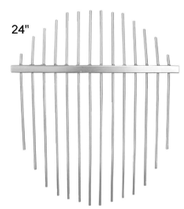

Size	Diameter of Steel Frame & Center Bars	Approx. Bar Spacing	Steel Strap Size	Bolt Size
4"	1/4"	1"	1/8" x 3/4"	1/4" x 1 1/4"
6"	1/4"	1.04"	1/8" x 3/4"	1/4" x 1 1/4"
8"	1/4"	1.06"	1/8" x 3/4"	1/4" x 1 1/4"
10"	5/16"	1.17"	1/8" x 1"	5/16" x 1 1/2"
12"	5/16"	1"	1/8" x 1"	5/16" x 1 1/2"
15"	5/16"	1.38"	1/8" x 1"	5/16" x 1 1/2"

Size	Diameter of Center Bars	Approx. Bar Spacing	Square Steel Frame	Steel Rod Size
18"	5/16"	1.19"	3/4"	3/8"
21"	5/16"	1.19"	3/4"	3/8"
24"	5/16"	1.19"	1"	3/8"
30"	5/16"	1.19"	1"	3/8"
36"	5/16"	1.19"	1"	3/8"
42"	1/2"	1"	3/4" / 1"	1/2"
48"	1/2"	1"	3/4" / 1"	1/2"
54"	1/2"	1.5"	1 1/4" / 1 1/2"	1/2"
60"	1/2"	1.5"	1 1/4" / 1 1/2"	1/2"

RIPRAP PLUNGE POOL

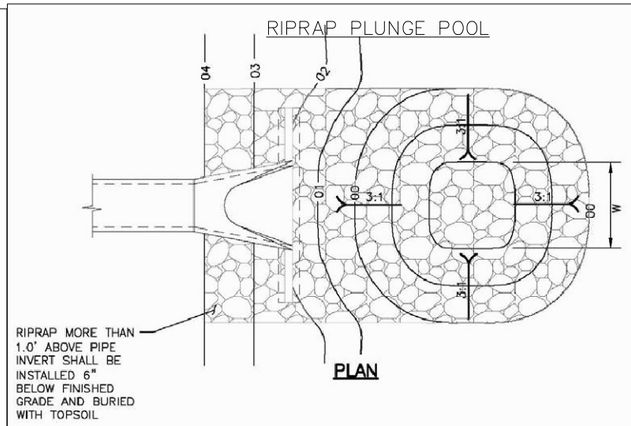

PLAN

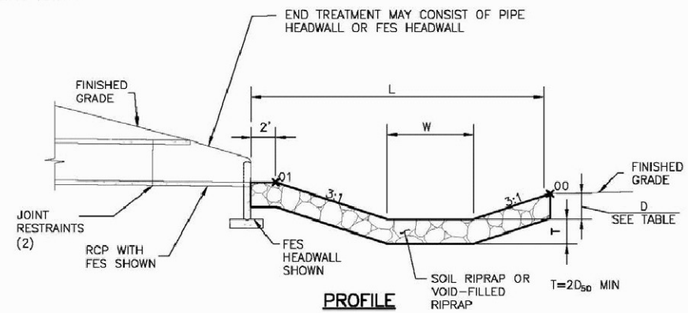

PROFILE

PIPE SIZE OR BOX HEIGHT	D	W*	L
18" – 24"	1'–0"	4'	15'
30" – 36"	1'–6"	6'	20'
42" – 48"	2'–0"	7'	24'
54" – 60"	2'–6"	8'	28'
66" – 72"	3'–0"	9'	32'

* IF OUTLET PIPE IS A BOX CULVERT WITH A WIDTH GREATER THAN W, THEN W = CULVERT WIDTH

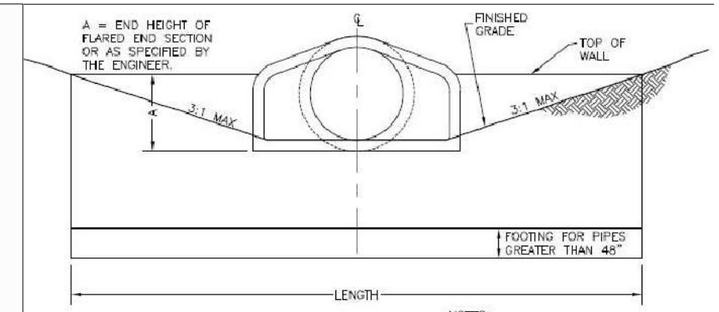

ELEVATION VIEW

NOTES:

1. MINIMUM REINFORCING OF #4 BARS ON 12-INCH CENTERS EACH WAY REQUIRED IN HEADWALL, TOEWALL, AND FOUNDATION/FOOTING.

2. INSTALL JOINT FASTENERS TO JOINT IMMEDIATELY UPSTREAM OF OUTLET. LOCATE AT 10–O'CLOCK AND 2–O'CLOCK. TRIM THREAD FLUSH WITH INTERIOR BOLTS.

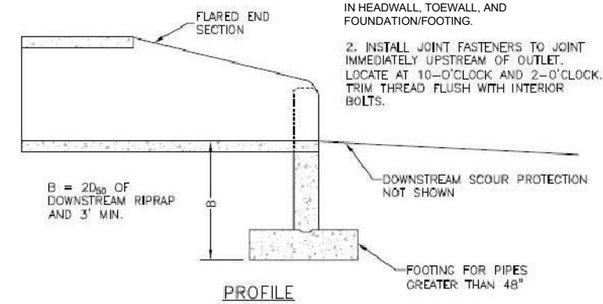

PROFILE

HEADWALL DESIGN TABLE

PIPE SIZE	LENGTH, MIN
18"	7'–0"
24"	8'–0"
30"	10'–0"
36"	12'–6"
42"	15'–9"
48"	17'–6"
54"	19'–6"
60"	21'–6"
66"	22'–6"
72"	24'–0"

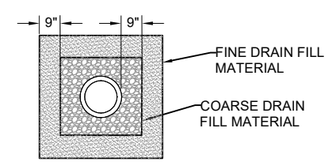

SECTION OF FILTER DRAIN - OUTLET PIPE

DRAIN FILL MATERIAL		
STANDARD SIEVE SIZE	FINE FILL LIMITS	COARSE FILL LIMITS
1"		100
3/4"		75-100
1/2"		40-80
3/8"	100	20-50
#4	96-100	0-30
#8	80-100	0-15
#16	50-85	
#30	25-60	
#50	5-30	
#100	0-10	
#200	0-3	

United States Department of Agriculture
Forest Service

R09
EASTERN REGION

STAMPS, LOGOS, AND SEALS

NO.	REVISION / ISSUE	DATE
4		
3		
2		
1		

PROJECT NAME

BEAVER LAKE DAM REHABILITATION

MARK TWAIN NATIONAL FOREST

POPLAR BLUFF RANGER DISTRICT

DRAWING TITLE

DETAILS

DATE 05-01-2026
ARCHIVE NO.
DESIGNER RKC
DRAWN RKC
CHECKED AW
PROJECT NO.
DRAWING SHEET NO. C-05
SHEET 6 OF 8

5/1/26 10:58 ROBERT CONAWAY C:_PROJECTS\POPLAR BLUFF\BEAVER LAKE\DRAWINGS\BEAVER LAKE MOD 01-2026.DWG;

TABLE OF DIMENSIONS AND QUANTITIES

PIPE DIA.	APPROX WEIGHT	ⓐ ROD SIZE	H	R	X	O	TOTAL LENGTH	NUM. REQ'D.	N	ⓑ ROD SIZE	r	LENGTH	NUM. REQ'D.	ⓒ ROD SIZE	r	LENGTH	NUM. REQ'D.	ⓓ BAR SIZE	r	LENGTH	NUM. REQ'D.	X *
IN.	LBS.	IN.	IN.	IN.	IN.	IN.	IN.		IN.	IN.	IN.	IN.		IN.	IN.	IN.		IN.	IN.	IN.		IN.
6	19.2	3/8	9	4	6	9 1/2	33	14	4	3/8	8 1/4	55	3	–	–	–	0	2 x 1/4	3 3/8	26 1/4	1	5 3/8
8	22.7	3/8	11	4 1/2	6	10 1/2	39	10	6 1/4	3/8	9 1/4	61 1/4	3	–	–	–	0	2 x 1/4	4 3/8	32 1/2	1	5 3/8
10	25.1	3/8	13	5 1/2	6	11 1/2	42	10	7	3/8	10 1/4	68	3	–	–	–	0	2 x 1/4	5 3/8	38 3/4	1	5 3/8
12	27.5	3/8	15	5 1/2	6	12 1/2	45	10	7 1/2	3/8	11 1/4	74 1/4	3	–	–	–	0	2 x 1/4	6 3/8	45	1	5 3/8
14	48.7	1/2	17	6	6	14	48	10	8 1/8	1/2	12	77	3	1/2	5	31 3/8	1	2 x 1/4	7 1/2	52 1/8	1	5 3/8
16	52.7	1/2	19	6 1/2	6	15	51	10	8 3/4	1/2	13	83 1/4	3	1/2	6	37 5/8	1	2 x 1/4	8 1/2	58 3/8	1	5 3/8
18	69.8	1/2	22	8 1/2	9	19 1/2	60	12	9 1/2	1/2	17	108 3/8	3	1/2	7	44	1	2 x 1/4	9 1/2	64 5/8	1	8 3/8
20	113	5/8	25	9	9	20 1/2	66	12	10	5/8	17 3/4	113 1/2	3	5/8	8	50 1/4	1	2 x 1/4	10 5/8	71 3/4	1	8 3/8
22	118.7	5/8	28	10	9	22	69	12	10 1/2	5/8	18 3/4	119 3/4	3	5/8	8	50 1/4	1	2 x 1/4	11 5/8	78	1	8 3/8
24	125.1	5/8	30	10 1/2	9	23	72	12	11	5/8	19 3/4	126	3	5/8	9 3/8	58 7/8	1	2 x 1/4	12 5/8	84 3/8	1	8 3/8
30	138.3	5/8	30	13 1/2	9	26	78	12	12	5/8	22 3/4	145 1/4	3	5/8	10 1/2	58 7/8	1	2 x 1/4	16	100 1/2	1	8 3/8

NOTE: WELD ⓑ AND ⓒ RODS AND ⓓ BARS TO ⓐ RODS AND WELD ⓐ RODS TO TOP PLATE

*ALTERNATE DIMENSION FOR USE WITH CORRUGATED METAL PIPE.

NOTES:
1. METAL RODS SHALL CONFORM TO A.S.T.M. DESIGNATION A–36.
2. TRASH RACK SHALL HAVE ONE COAT OF PAINT.

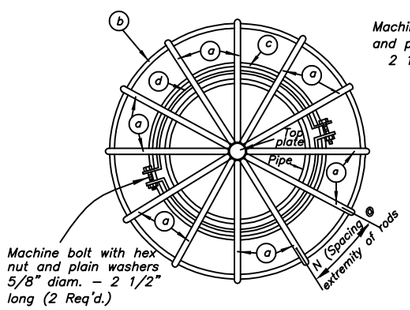

PLAN

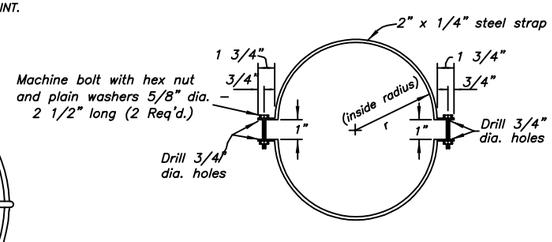

BENDING DIAGRAM FOR ⓓ BAR

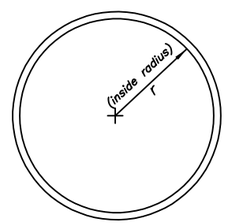

BENDING DIAGRAM FOR ⓑ AND ⓒ RODS

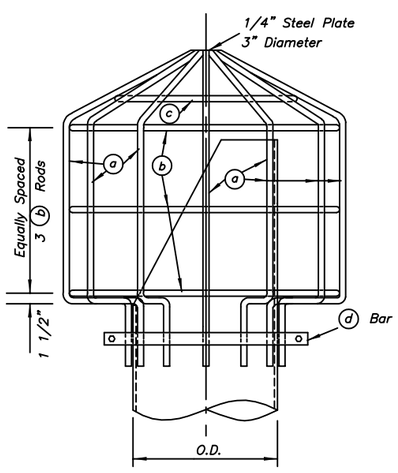

ELEVATION

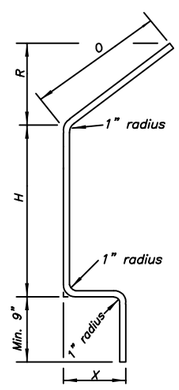

BENDING DIAGRAM FOR ⓐ RODS

TRASH GUARD DETAIL (N.T.S.)
DETAIL PROVIDED FOR GUIDANCE IF CONTRACTOR IS TO CONSTRUCT IN-HOUSE.
EQUIVALENT PRE-MANUFACTURED GUARDS ARE ACCEPTABLE.

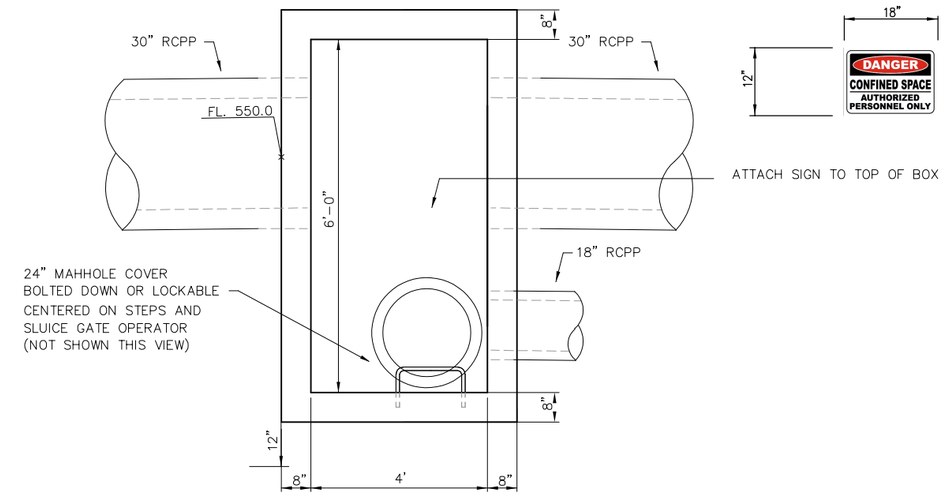

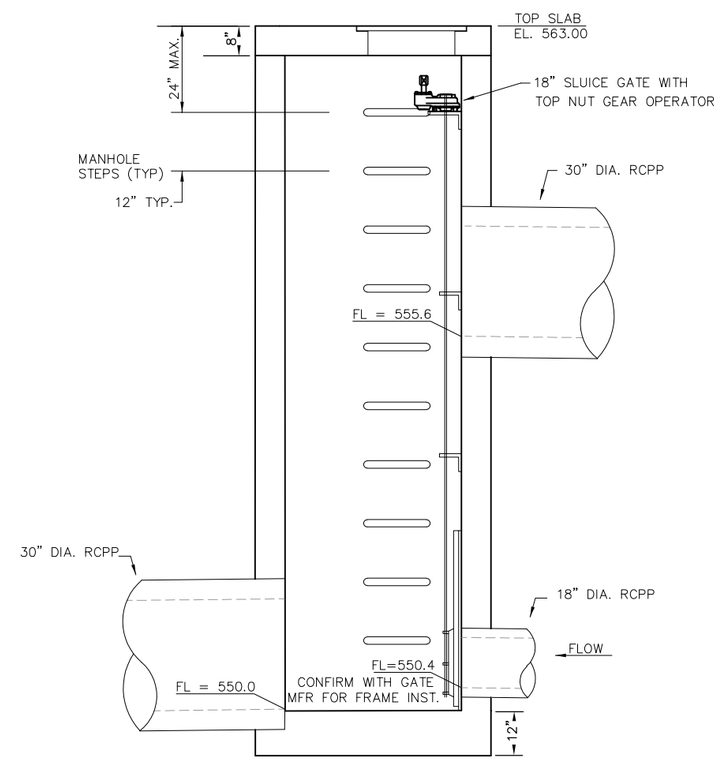

USDA FOREST SERVICE U.S. DEPARTMENT OF AGRICULTURE

United States Department of Agriculture
Forest Service

R09
EASTERN REGION

STAMPS, LOGOS, AND SEALS

NO.	REVISION / ISSUE	DATE
4		
3		
2		
1		

PROJECT NAME

BEAVER LAKE DAM REHABILITATION

MARK TWAIN NATIONAL FOREST

POPLAR BLUFF RANGER DISTRICT

DRAWING TITLE

DETAILS

DATE 05-01-2026	ARCHIVE NO.
DESIGNER RKC	DRAWING SHEET NO. C-06
DRAWN RKC	
CHECKED AW	
PROJECT NO.	SHEET 7 OF 8

5/1/26 11:02 ROBERTCONWAY C:_PROJECTS\POPLAR BLUFF\BEAVER LAKE\DRAWINGS\BEAVER LAKE MOD 01-2026.DWG;

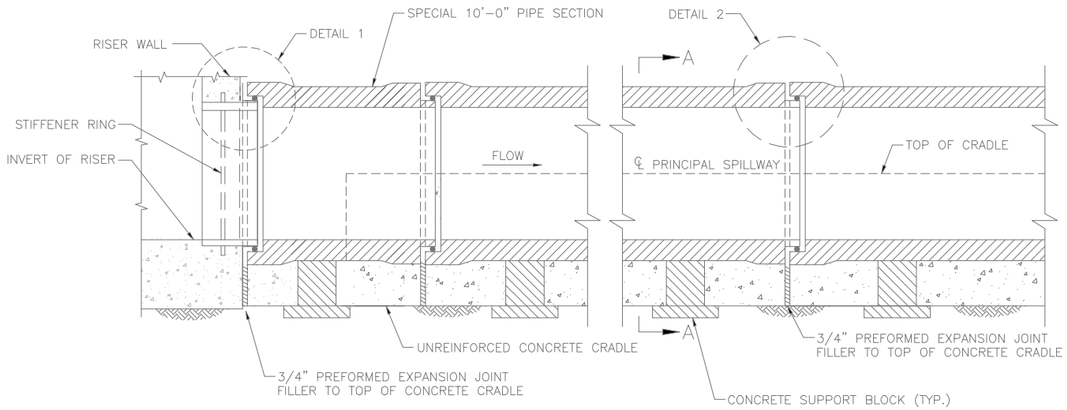

DETAIL OF WALL FITTING
NOT TO SCALE

DETAIL OF PIPE JOINT
NOT TO SCALE

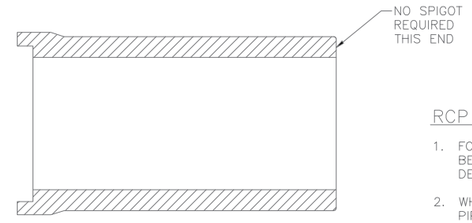

TERMINAL PIPE SECTION (ONE REQUIRED)
NOT TO SCALE

RCP JOINT NOTES:

1. FOR PIPE LENGTH OTHER THAN SHOWN, JOINT REQUIREMENTS WILL BE DETERMINED BY THE CONTRACTING OFFICER OR THEIR DESIGNATED REPRESENTATIVE.
2. WHERE PIPES OF DIFFERENT LENGTH ARE CONNECTED, ADJOINING PIPES SHALL MEET THE REQUIREMENTS OF THE LONGER PIPE.
3. PRIOR TO DELIVERY OF PIPE, THE PIPE JOINT DETAIL PROPOSED FOR USE SHALL BE SUBMITTED TO THE CONTRACTING OFFICER OR THEIR DESIGNATED REPRESENTATIVE FOR APPROVAL.

SUPPORT BLOCK NOTES

1. SUFFICIENT BLOCKS OR WEDGES SHALL BE PROVIDED TO SUPPORT THE PIPE TO THE REQUIRED LINE AND GRADE. THE CONTRACTOR SHALL DETERMINE THE NUMBER AND SIZE OF BLOCKS OR WEDGES REQUIRED.
2. A MINIMUM OF TWO SUPPORTS SHALL BE REQUIRED FOR EACH SECTION OF PIPE.
3. AT LEAST 6" SHALL BE MAINTAINED BETWEEN THE SIDE OF THE FINISHED CRADLE SURFACE AND THE COMPLETED SUPPORT BLOCK OR WEDGE
4. IT IS THE CONTRACTOR'S RESPONSIBILITY TO PREVENT FLOTATION OF THE RCP DURING PLACEMENT OF THE CONCRETE CRADLE.

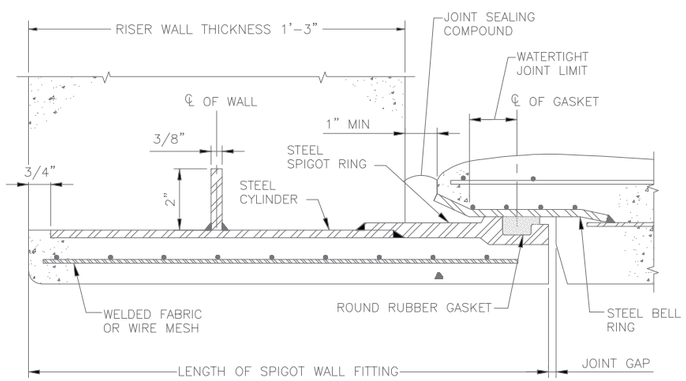

DETAIL 1
NOT TO SCALE

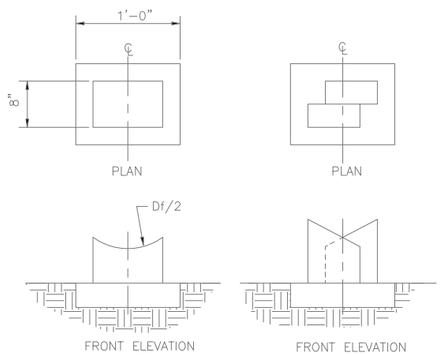

SUGGESTED SUPPORT BLOCKS AND WEDGES
NOT TO SCALE

PIPE NOTES

1. THE FIRST AND LAST PIPE SEGMENT SHALL BE PLACED AT A SLOPE NOT EXCEEDING 2%.

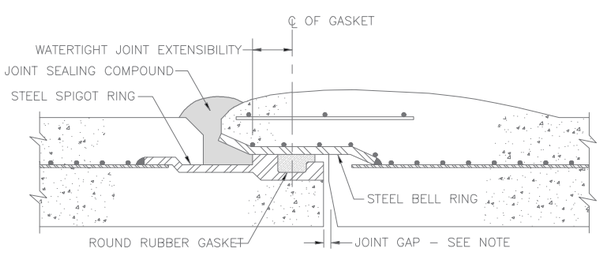

DETAIL 2
NOT TO SCALE

NOTE:
JOINT LENGTH EQUALS WATERTIGHT JOINT EXTENSIBILITY PLUS JOINT GAP. THE PIPE SHALL BE DRAWN TOGETHER SO THAT THE MAXIMUM JOINT GAP DOES NOT EXCEED ⅜" FOR PIPE LAID ON A STRAIGHT LINE.

JOINT REQUIREMENTS

PIPE I.D.	LENGTH OF PIPE SECTION	MINIMUM JOINT LENGTH	MINIMUM JOINT LIMITING ANGLE	
INCH	FEET	INCHES	RADIANS	DEGREES
30	10	3 1/8	0.0157	0.90

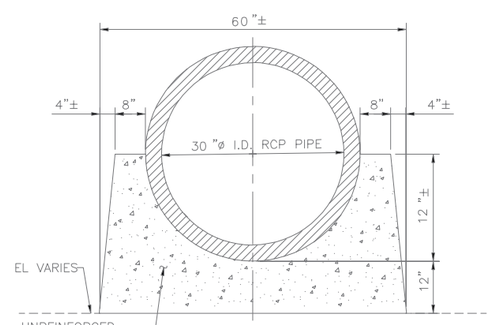

SECTION A-A
NOT TO SCALE

USDA FOREST SERVICE U.S. DEPARTMENT OF AGRICULTURE

United States Department of Agriculture
Forest Service

R09
EASTERN REGION

STAMPS, LOGOS, AND SEALS

NO.	REVISION / ISSUE	DATE
4		
3		
2		
1		

PROJECT NAME
BEAVER LAKE DAM REHABILITATION

MARK TWAIN NATIONAL FOREST

POPLAR BLUFF RANGER DISTRICT

DRAWING TITLE
DETAILS

DATE 05-01-2026	ARCHIVE NO.
DESIGNER RKC	DRAWING SHEET NO. C-07
DRAWN RKC	
CHECKED AW	
PROJECT NO.	SHEET 7 OF 8

5/1/26 11:02 ROBERTCONWAY C:_PROJECTS\POPLAR BLUFF\BEAVER LAKE\DRAWINGS\BEAVER LAKE MOD 01-2026.DWG;

FP-14 SUPPLEMENTAL SPECIFICATIONS FOR BEAVER LAKE DAM REHABILITATION

PREFACE

PREFACE_WO_08_25_2022

DELETE ALL BUT THE FIRST PARAGRAPH AND ADD THE FOLLOWING:

THE FOREST SERVICE, US DEPARTMENT OF AGRICULTURE HAS ADOPTED FP-14 WITH THE FOLLOWING SUPPLEMENTAL SPECIFICATION FOR CONSTRUCTION IMPROVEMENTS TO STERLING HOLLOW DAM.

101 - TERMS¸ FORMAT¸ AND DEFINITIONS

101.01_NATIONAL_9_15_2016

ADD THE FOLLOWING PARAGRAPH TO SUBSECTION 101.01:

101.01 MEANING OF TERMS.

DELETE ALL REFERENCES TO THE TAR (TRANSPORTATION ACQUISITION REGULATIONS) IN THE SPECIFICATIONS.

101.03_NATIONAL_4_7_2015

ADD THE FOLLOWING TO SUBSECTION 101.03:

101.03 ABBREVIATIONS.

ADD THE FOLLOWING:

(A) ACRONYMS.

AGAR — AGRICULTURE ACQUISITION REGULATIONS

FSAR — FOREST SERVICE ACQUISITION REGULATIONS

MSHA — MINE SAFETY AND HEALTH ADMINISTRATION

NESC — NATIONAL ELECTRICAL SAFETY CODE

(F) MISCELLANEOUS UNIT ABBREVIATIONS.

MP	—	MILEPOST	LOCATION
PPM	—	PARTS PER MILLION	VOLUME
STA		STATION	LOCATION

101.04_NATIONAL_9_5_2018

MAKE THE FOLLOWING CHANGES TO SUBSECTION 101.04:

DELETE THESE DEFINITIONS AND REPLACE THE FOLLOWING:

BID SCHEDULE — THE SCHEDULE OF ITEMS.

BRIDGE — A STRUCTURE, INCLUDING SUPPORTS, ERECTED OVER A DEPRESSION OR AN OBSTRUCTION SUCH AS WATER ALONG A ROAD, A TRAIL, OR A RAILWAY AND HAVING A DECK FOR CARRYING TRAFFIC OR OTHER LOADS.

CONTRACTOR — THE INDIVIDUAL OR LEGAL ENTITY CONTRACTING WITH THE GOVERNMENT FOR PERFORMANCE OF PRESCRIBED WORK. IN A TIMBER SALE CONTRACT, THE CONTRACTOR IS THE "PURCHASER".

CULVERT — ANY STRUCTURE WITH A BOTTOM, REGARDLESS OF FILL DEPTH, DEPTH OF INVERT BURIAL, OR PRESENCE OF HORIZONTAL DRIVING SURFACE, OR ANY BOTTOMLESS (NATURAL CHANNEL) STRUCTURE WITH FOOTINGS THAT WILL NOT HAVE WHEEL LOADS IN DIRECT CONTACT WITH THE TOP OF THE STRUCTURE.

DRAWINGS — (PUBLIC WORKS CONTRACTS) DESIGN SHEETS OR FABRICATION, ERECTION, OR CONSTRUCTION DETAILS SUBMITTED TO THE CO BY THE CONTRACTOR ACCORDING TO FAR CLAUSE 52.236-21 SPECIFICATIONS AND DRAWINGS FOR CONSTRUCTION. ALSO REFERS TO SUBMISSIONS AND SUBMITTALS.

NOTICE TO PROCEED — (PUBLIC WORKS CONTRACTS) WRITTEN NOTICE TO THE CONTRACTOR TO BEGIN THE CONTRACT WORK.

RIGHT-OF-WAY — A GENERAL TERM DENOTING (1) THE PRIVILEGE TO PASS OVER LAND IN SOME PARTICULAR LINE (INCLUDING EASEMENT, LEASE, PERMIT, OR LICENSE TO OCCUPY, USE, OR TRAVERSE PUBLIC OR PRIVATE LANDS), OR (2) REAL PROPERTY NECESSARY FOR THE PROJECT, INCLUDING ROADWAY, BUFFER AREAS, ACCESS, AND DRAINAGE AREAS.

SOLICITATION— (PUBLIC WORKS CONTRACTS) THE COMPLETE ASSEMBLY OF DOCUMENTS (WHETHER ATTACHED OR INCORPORATED BY REFERENCE) FURNISHED TO PROSPECTIVE BIDDERS.

ADD THE FOLLOWING DEFINITIONS:

ADJUSTMENT IN CONTRACT PRICE — "EQUITABLE ADJUSTMENT," AS USED IN THE FEDERAL ACQUISITION REGULATIONS, OR "CONSTRUCTION COST ADJUSTMENT," AS USED IN THE TIMBER SALE CONTRACT, AS APPLICABLE.

CHANGE — "CHANGE" MEANS "CHANGE ORDER" AS USED IN THE FEDERAL ACQUISITION REGULATIONS, OR "DESIGN CHANGE" AS USED IN THE TIMBER SALE CONTRACT.

FOREST SERVICE — THE UNITED STATES OF AMERICA, ACTING THROUGH THE FOREST SERVICE, U.S. DEPARTMENT OF AGRICULTURE.

NEAT LINE — A LINE DEFINING THE PROPOSED OR SPECIFIED LIMITS OF AN EXCAVATION OR STRUCTURE.

PIONEER ROAD — TEMPORARY CONSTRUCTION ACCESS BUILT ALONG THE ROUTE OF THE PROJECT.

PROTECTED STREAMCOURSE — A DRAINAGE SHOWN ON THE PLANS OR TIMBER SALE AREA MAP THAT REQUIRES DESIGNATED MITIGATION MEASURES.

ROAD ORDER — AN ORDER AFFECTING AND CONTROLLING TRAFFIC ON ROADS UNDER FOREST SERVICE JURISDICTION. ROAD ORDERS ARE ISSUED BY A DESIGNATED FOREST OFFICER UNDER THE AUTHORITIES OF 36 CFR, PART 260.

SHOP DRAWINGS — (TIMBER AND STEWARDSHIP CONTRACTS) REFERRED TO AS "DRAWINGS" IN FP-14, INCLUDES DRAWINGS, DIAGRAMS, LAYOUTS, SCHEMATICS, DESCRIPTIVE LITERATURE, ILLUSTRATIONS, LISTS OR TABLES, PERFORMANCE AND TEST DATA, AND SIMILAR MATERIALS FURNISHED BY PURCHASER TO EXPLAIN IN DETAIL SPECIFIC PORTIONS OF THE WORK REQUIRED BY THE CONTRACT.

102 - BID¸ AWARD¸ AND EXECUTION OF CONTRACT

102.00_NATIONAL_9_15_2016

DELETE SECTION 102 IN ITS ENTIRETY.

103 - SCOPE OF WORK

103.00_NATIONAL_9_15_2016

DELETE SECTIONS 103.02, 103.03, 103.04, 103.05.

ADD THE FOLLOWING TO SECTION 103.01.

THE WORK SHOWN IN THE PLANS AND SPECIFICATIONS INCLUDE THE FOLLOWING:

BASE BID – MAKING IMPROVEMENTS AS NECESSARY TO DRAW DOWN WATER LEVELS, CLEAR AND GRUB, EXCAVATE AND REMOVE EXISTING OVERFLOW CONDUIT AND APPURTENANCES AND REPAIRING SPILLWAY EROSION WITH RIPRAP.

MAKING IMPROVEMENTS AS NECESSARY TO DRAW DOWN WATER LEVELS, CLEAR AND GRUB, EXCAVATE AND REMOVE EXISTING OVERFLOW CONDUIT AND APPURTENANCES; INSTALLATION OF A NEW OVERFLOW CONDUIT, LEVEL CONTROL STRUCTURE AND APPURTENANCES; REGRADING AND RIPRAP ARMORING OF THE EXISTING SPILLWAY; RECONSTRUCTION OF MISCELLANEOUS ACCESS ROADS AND INSTALLATION OF ARTICULATED CONCRETE MAT BOAT RAMP.

OPTIONAL BID ITEM 1 – INCLUDES SHALLOW INSTALLATION OF A NEW LEVEL CONTROL CONDUIT WITHIN THE SPILLWAY.

OPTIONAL BID ITEM 1 – INCLUDES INSTALLATION OF A NEW LEVEL CONTROL AND DRAWDOWN STRUCTURE, CONDUITS AND APPURTENANCES LOCATED AT THE SITE OF THE EXISTING CONDUIT REMOVAL>

104 - CONTROL OF WORK

DELETE SUBSECTIONS 104.01, 104.02, AND 104.04.

104.06_NATIONAL_9_16_2016

ADD THE FOLLOWING AS SUBSECTION 104.06:

104.06 USE OF ROADS BY CONTRACTOR.

THE CONTRACTOR IS AUTHORIZED TO USE ROADS UNDER THE JURISDICTION OF THE FOREST SERVICE FOR ALL ACTIVITIES NECESSARY TO COMPLETE THIS CONTRACT, SUBJECT TO THE LIMITATIONS AND AUTHORIZATIONS DESIGNATED IN THE ROAD ORDER(S) OR DESCRIBED IN THE CONTRACT, WHEN SUCH USE WILL NOT DAMAGE THE ROADS OR NATIONAL FOREST RESOURCES, AND WHEN TRAFFIC CAN BE ACCOMMODATED SAFELY. CONTRACTOR SHALL MAINTAIN THE ROADWAYS USED TO ACCESS THE WORK FOR THE DURATION OF THE CONTRACT.

105 - CONTROL OF MATERIAL

105.05_NATIONAL_6_29_2020

105.05 USE OF MATERIAL FOUND IN THE WORK.

DELETE 105.05 (A) AND (B) AND THE LAST SENTENCE OF THE SECOND PARAGRAPH AND SUBSTITUTE THE FOLLOWING:

MATERIALS PRODUCED OR PROCESSED FROM GOVERNMENT LANDS IN EXCESS OF THE QUANTITIES REQUIRED FOR PERFORMANCE OF THIS CONTRACT ARE THE PROPERTY OF THE GOVERNMENT. PLACE EXCESS MATERIAL SAFELY AT GOVERNMENT-APPROVED LOCATION, AT NO ADDITIONAL COST TO GOVERNMENT.

ADD THE FOLLOWING AS SUBSECTION 105.07:

105.07 LEAD FREE AGGREGATE & ROCK.

ANY STONE SOURCED FROM ANY THE FOLLOWING COUNTIES IN SOUTHEAST MISSOURI WILL NEED TO BE TESTED: CRAWFORD, DENT, SHANNON, WASHINGTON, IRON, REYNOLDS, MADISON, ST. FRANCOIS, ST. GENEVIEVE, AND BOLLINGER COUNTIES. IF STONE IS SOURCED FROM A COUNTY NOT LISTED, IT WILL NOT HAVE TO BE TESTED, HOWEVER CONTRACTOR MUST PROVIDE TICKETS OR INVOICES THAT CLEARLY SHOW WHERE THOSE MATERIALS WERE SOURCED FROM.

MATERIALS FROM THESE AREAS SHOULD BE VISUALLY INSPECTED TO ENSURE THAT NO HAZARDOUS MINERALIZATION IS PRESENT. MINERALIZATION INCLUDING GALENA, SPHALERITE, AND CHALCOPYRITE

SHOULD NOT BE PRESENT IN ANY MATERIALS PLACED ON NATIONAL FOREST SYSTEMS LANDS. AGGREGATE AND/OR RIP RAP THAT DOES NOT CONTAIN MATERIAL IN THE <2MM FRACTION (PASSES A #10 SIEVE) MAY ONLY NEED TO BE SUBJECT TO VISUAL INSPECTION. AGGREGATE AND/OR RIP RAP THAT CONTAINS MATERIAL IN THE <2MM FRACTION (PASSES A #10 SIEVE) WILL NEED TO BE SAMPLED TO ENSURE THAT THE MATERIAL DOES NOT EXCEED 100 PARTS PER MILLION (PPM) FOR LEAD (PB). THE METHODS AND EQUIPMENT USED FOR SAMPLING MATERIALS WILL VARY WITH THE FORM AND CONSISTENCY OF THE MATERIALS TO BE SAMPLED. SAMPLES COLLECTED USING THE SAMPLING PROTOCOLS LISTED BELOW WILL BE CONSIDERED BY THE AGENCY TO BE REPRESENTATIVE OF THE MATERIAL. SAMPLING OR SCREENING RESULTS SHOULD BE PROVIDED IN WRITING TO THE CONTRACTING OFFICER REPRESENTATIVE (COR) PRIOR TO ANY MATERIAL BEING DELIVERED.

CORE OR SCOOP SAMPLING - ASTM STANDARD E1727

ALL EXTRACTION AND ANALYTICAL METHODS MUST FOLLOW THE SW-846 COMPENDIUM

OR

XRF SCREENING - UNE-EN ISO 13196

NUMBER OF SAMPLES REQUIRED, BASED ON QUANTITY REQUIRED IN THE SCHEDULE OF ITEMS

TONS	# OF SAMPLES/ SCREENINGS
0-100	3
101-500	5
501-1000	10

106 - ACCEPTANCE OF WORK

106.01_NATIONAL_7_18_2017

DELETE SUBSECTION 106.01 AND REPLACE WITH THE FOLLOWING:

106.01 CONFORMITY WITH CONTRACT REQUIREMENTS.

FOLLOW THE REQUIREMENTS OF FAR CLAUSE 52.246-12 INSPECTION OF CONSTRUCTION.

REFERENCES TO STANDARD TEST METHODS OF AASHTO, ASTM, GSA, AND OTHER RECOGNIZED STANDARD AUTHORITIES REFER TO THE METHODS IN EFFECT ON THE DATE OF SOLICITATION FOR BIDS.

PERFORM ALL WORK TO THE LINES, GRADES, CROSS-SECTIONS, DIMENSIONS, AND PROCESSES OR MATERIAL REQUIREMENTS SHOWN ON THE PLANS OR SPECIFIED IN THE CONTRACT.

INCORPORATE MANUFACTURED MATERIALS INTO THE WORK ACCORDING TO THE MANUFACTURER'S RECOMMENDATIONS OR TO THESE SPECIFICATIONS, WHICHEVER IS MORE STRICT.

PLAN DIMENSIONS AND CONTRACT SPECIFICATION VALUES ARE THE VALUES TO BE STRIVED FOR AND COMPLIED WITH AS THE DESIGN VALUES FROM WHICH ANY DEVIATIONS ARE ALLOWED. PERFORM WORK AND PROVIDE MATERIAL THAT IS UNIFORM IN CHARACTER AND REASONABLY CLOSE TO THE

PRESCRIBED VALUE OR WITHIN THE SPECIFIED TOLERANCE RANGE. THE PURPOSE OF A TOLERANCE RANGE IS TO ACCOMMODATE OCCASIONAL MINOR VARIATIONS FROM THE MEDIAN ZONE THAT ARE UNAVOIDABLE FOR PRACTICAL REASONS.

WHEN STANDARD MANUFACTURED ITEMS ARE SPECIFIED (SUCH AS FENCE, WIRE, PLATES, ROLLED SHAPES, PIPE CONDUITS, ETC., THAT ARE IDENTIFIED BY GAUGE, UNIT MASS, SECTION DIMENSIONS, ETC.), THE IDENTIFICATION WILL BE CONSIDERED TO BE NOMINAL MASSES OR DIMENSIONS. UNLESS SPECIFIC CONTRACT TOLERANCES ARE NOTED, ESTABLISHED MANUFACTURING TOLERANCES WILL BE ACCEPTED.

THE GOVERNMENT MAY INSPECT, SAMPLE, OR TEST ALL WORK AT ANY TIME BEFORE FINAL ACCEPTANCE OF THE PROJECT. WHEN THE GOVERNMENT TESTS WORK, COPIES OF TEST REPORTS ARE FURNISHED TO THE CONTRACTOR UPON REQUEST. GOVERNMENT TESTS MAY OR MAY NOT BE PERFORMED AT THE WORK SITE. IF CONTRACTOR TESTING AND INSPECTION IS VERIFIED BY THE GOVERNMENT, THE CONTRACTOR'S RESULTS MAY BE USED BY THE GOVERNMENT TO EVALUATE WORK FOR ACCEPTANCE. DO NOT RELY ON THE AVAILABILITY OF GOVERNMENT TEST RESULTS FOR PROCESS CONTROL.

ACCEPTABLE WORK CONFORMING TO THE CONTRACT WILL BE PAID FOR AT THE CONTRACT UNIT BID PRICE. FOUR METHODS OF DETERMINING CONFORMITY AND ACCEPTING WORK ARE DESCRIBED IN SUBSECTIONS 106.02 TO 106.05 INCLUSIVE. THE PRIMARY METHOD OF ACCEPTANCE IS SPECIFIED IN EACH SECTION OF WORK. HOWEVER, WORK MAY BE REJECTED AT ANY TIME IT IS FOUND BY ANY OF THE METHODS NOT TO COMPLY WITH THE CONTRACT.

REMOVE, REPAIR, OR REPLACE WORK THAT DOES NOT CONFORM TO THE CONTRACT, OR TO PREVAILING INDUSTRY STANDARDS WHERE NO SPECIFIC CONTRACT REQUIREMENTS ARE NOTED. REMOVING, REPAIRING, OR REPLACING WORK; PROVIDING TEMPORARY TRAFFIC CONTROL; AND ANY OTHER RELATED WORK TO ACCOMPLISH CONFORMITY WILL BE AT NO COST TO THE GOVERNMENT.

(A) DISPUTING GOVERNMENT TEST RESULTS. IF THE ACCURACY OF GOVERNMENT TEST RESULTS IS DISPUTED, PROMPTLY INFORM THE CO. IF THE DISPUTE IS UNRESOLVED AFTER REASONABLE STEPS ARE TAKEN TO RESOLVE THE DISPUTE, FURTHER EVALUATION MAY BE OBTAINED BY WRITTEN REQUEST. INCLUDE A NARRATIVE DESCRIBING THE DISPUTE AND A PROPOSED RESOLUTION PROTOCOL THAT ADDRESSES THE FOLLOWING:

1. SAMPLING METHOD.
2. NUMBER OF SAMPLES.
3. SAMPLE TRANSPORT.
4. TEST PROCEDURES.
5. TESTING LABORATORIES.
6. REPORTING.
7. ESTIMATED TIME AND COSTS, AND
8. VALIDATION PROCESS.

IF THE EVALUATION REQUIRES ADDITIONAL SAMPLING OR TESTING BE PERFORMED, MUTUALLY AGREE WITH THE GOVERNMENT ON WITNESSING PROCEDURES AND ON SAMPLING AND TESTING BY A THIRD PARTY LABORATORY. USE A THIRD PARTY LABORATORY ACCREDITED BY THE AASHTO ACCREDITATION

PROGRAM. PROVIDE PROOF OF THE LABORATORY'S ACCREDITATION FOR THE TEST PROCEDURES TO BE USED. DO NOT USE THE SAME LABORATORY THAT PRODUCED THE DISPUTED GOVERNMENT TEST RESULTS OR THAT PRODUCED THE TEST RESULTS USED AS A BASIS FOR THE DISPUTE.

THE CO WILL REVIEW THE PROPOSED RESOLUTION PROTOCOL AND MAY MODIFY IT BEFORE FINAL APPROVAL AND EXECUTION.

THE GOVERNMENT WILL USE THE APPROVED RESOLUTION PROTOCOL TEST RESULTS TO DETERMINE THE VALIDITY OF THE DISPUTED TESTING. IF THE GOVERNMENT TEST RESULTS ARE VALIDATED, THE CONTRACTOR WILL BE RESPONSIBLE FOR ALL COSTS ASSOCIATED WITH DEVELOPING AND PERFORMING THE RESOLUTION PROTOCOL. IF THE GOVERNMENT TEST RESULTS ARE NOT VALIDATED, THE GOVERNMENT WILL BE RESPONSIBLE FOR ALL COSTS ASSOCIATED WITH DEVELOPING AND PERFORMING THE RESOLUTION PROTOCOL. IF THE VALIDITY OF THE GOVERNMENT TEST RESULTS CANNOT BE DETERMINED, THE CONTRACTOR AND GOVERNMENT WILL EQUALLY SHARE ALL COSTS ASSOCIATED WITH DEVELOPING AND CARRYING OUT THE RESOLUTION PROTOCOL.

(B) ALTERNATIVES TO REMOVING AND REPLACING NON-CONFORMING WORK. AS AN ALTERNATIVE TO REMOVAL AND REPLACEMENT, THE CONTRACTOR MAY SUBMIT A WRITTEN REQUEST TO:

1. HAVE THE WORK ACCEPTED AT A REDUCED PRICE, OR
   BE GIVEN PERMISSION TO PERFORM CORRECTIVE MEASURES TO BRING THE WORK INTO CONFORMITY.

THE REQUEST MUST CONTAIN SUPPORTING RATIONALE AND DOCUMENTATION. INCLUDE REFERENCES OR DATA JUSTIFYING THE PROPOSAL BASED ON AN EVALUATION OF TEST RESULTS, EFFECT ON SERVICE LIFE, VALUE OF MATERIAL OR WORK, QUALITY, AESTHETICS, AND OTHER TANGIBLE ENGINEERING BASIS. THE CO WILL DETERMINE DISPOSITION OF THE NONCONFORMING WORK.

106.02_NATIONAL_10_23_2016

DELETE SUBSECTION 106.02 AND REPLACE WITH THE FOLLOWING:

106.02 VISUAL INSPECTION.

ACCEPTANCE IS BASED ON VISUAL INSPECTION OF THE WORK FOR COMPLIANCE WITH THE SPECIFIC CONTRACT REQUIREMENTS. USE PREVAILING INDUSTRY STANDARDS IN THE ABSENCE OF SPECIFIC CONTRACT REQUIREMENTS OR TOLERANCES.

107 - LEGAL RELATIONS AND RESPONSIBILITY TO THE PUBLIC

107.05_NATIONAL_7_18_2017

DELETE SUBSECTION 107.05.

108 - PROSECUTION AND PROGRESS

108.00_NATIONAL_9_16_2016

DELETE SECTION 108 IN ITS ENTIRETY.

109 - MEASUREMENT AND PAYMENT

109.01_NATIONAL_2_22_2019

DELETE THE THIRD PARAGRAPH AND TABLE 109-1 OF SUBSECTION 109.01 AND REPLACE WITH THE FOLLOWING:

109.01 MEASUREMENT OF WORK.

TAKE MEASUREMENTS AS DESCRIBED IN SUBSECTION 109.02 UNLESS OTHERWISE MODIFIED BY THE MEASUREMENT SUBSECTION OF THE SECTION CONTROLLING THE WORK BEING PERFORMED. TABLE 109-1 INDICATES THE ACCURACY REQUIRED FOR QUANTITIES OF THE VARIOUS PAY UNITS USED IN THE SCHEDULE OF ITEMS. USE THIS GUIDE TO DETERMINE THE DECIMAL PLACEMENT IN THE FINAL PAYMENT.

TABLE 109-1

DECIMAL ACCURACY OF QUANTITIES FOR FINAL PAYMENT

PAY ITEM	LEVEL OF PRECISION
LINEAR FOOT	1
EXCEPTION--TIMBER, STEEL, AND CONCRETE PILES	0.1
STATION	0.1
MILE	0.01
SQUARE FOOT	0.1
SQUARE YARD	0.1
EACH	1
ACRE	0.01
GALLON	1
M-GALS.	0.1
CUBIC YARD	1
EXCEPTION--STRUCTURE EXCAVATION; SHEATHING MATERIALS; BEDDING, BED COURSE, AND BACKFILL MATERIALS; GABIONS;	0.1
EXCEPTION--CONCRETE; MASONRY	0.01
POUND	1
TON	0.1
EXCEPTION--CALCIUM CHLORIDE; SODIUM CHLORIDE; HYDRATED LIME; BITUMINOUS MATERIALS; PAVEMENTS; BED COURSE MATERIALS	0.01
HOUR	0.1
MFBM	0.01
STATION YARD	1
CUBIC YARD MILE	1
TON MILE	1

ADD THE FOLLOWING SENTENCE TO SUBSECTION 109.02(B):

109.02 MEASUREMENT TERMS AND DEFINITIONS.

(B) CONTRACT QUANTITY.

CONTRACT QUANTITIES WILL BE ADJUSTED ONLY WHEN THERE ARE ERRORS IN THE ORIGINAL DESIGN OF 15% OR MORE.

109.00_NATIONAL_9_16_2016

DELETE SUBSECTIONS 109.06, 109.07, 109.08, AND 109.09:

157 - SOIL EROSION AND SEDIMENT CONTROL

DELETE SUBSECTION 157.03 AND REPLACE WITH THE FOLLOWING:

157.03 SOIL EROSION, SEDIMENT CONTROL, AND DEWATERING PLAN.

REVIEW CONSTRUCTION PLANS AND THEN DEVELOP A SOIL EROSION, SEDIMENT CONTROL AND DEWATERING PLAN. THE FOLLOWING CONCEPT IS PROVIDED AS A GUIDE AND SHOULD NOT SUPERSEDE THE CONTRACTOR PREFERRED MEANS AND METHODS OF CONSTRUCTION. THE CONTRACTOR CAN PRESENT OTHER METHODS IN THE PLAN. THE PLAN MUST BE APPROVED BY THE COR 20-DAYS PRIOR TO LAND DISTURBANCE ACTIVITIES. MAJOR OPERATIONS CONSIDERED IN PLAN THAT REQUIRE DETAILED EROSION AND SEDIMENT CONTROL SHALL INCLUDE LAKE DRAWDOWN, EXCAVATION & EMBANKMENT FOR CONDUIT AND SPILLWAY INSTALLATION. THE PLAN SHALL INCLUDE CONTROL EROSION AND SEDIMENT BMPS TO BE UTILIZED DURING ALL OPERATIONS OF LAND DISTURBANCE NOT CONTAINED WITHIN THE INTERIOR BOUNDARY OF THE NORMAL POOL ELEVATION.

THE LAKE MAY BE DRAWDOWN BY MEANS OF SIPHON OR PUMP [(1)]. IF A SIPHON IS UTILIZED IT WILL REQUIRE 3-STAGES OF OPERATION. THE MAXIMUM SIPHON SIZE IS 12” IN DIAMETER. PEAK DRAWDOWN FLOWRATES MUST DROP WATER SURFACE NO MORE THAN 2-FT PER DAY TO ENSURE UPSTREAM DAM SLOPE STABILITY. DRAWDOWN OPERATIONS SHALL MINIMIZE SEDIMENT REMOVAL FROM THE LAKE. DISCHARGE WATER SHALL HAVE A TOTAL SETTLEABLE SOLIDS (TSS) LESS THAN OR EQUAL TO 2.5 ML/L/HR. TESTING OF SETTLEABLE SOLIDS SHALL OCCUR WHEN REQUESTED BY COR TO VERIFY PERFORMANCE OF EROSION AND SEDIMENT CONTROL MEASURES.

(1) DRAWDOWN LEVEL IS VARIABLE BASED ON CONTRACTOR’S CONSTRUCTION MEANS. UTILIZATION OF TEMPORARY COFFER DAMS OR SIMILAR MEANS TO REDUCE THE DRAWDOWN LEVEL IS ACCEPTABLE. THE ESTIMATED BOTTOM OF BASIN IS 533’. MAINTAINING A 6’ MINIMUM WATER DEPTH IS DESIRABLE TO AVOID AQUATIC ORGANISM MORTALITY [(2)].

DISCHARGE POINT TO DOWNSTREAM CHANNEL MUST BE AT LEAST 10-FT DOWNSTREAM OF THE TOE OF THE DAM. THIS DISCHARGE POINT WILL REQUIRE EROSION CONTROL. CONSIDER PROPERLY DESIGNED SEDIMENT FILTER BAGS (FP-14 713.19 SEDIMENT FILTER BAGS) OR OTHER MEANS IF THE SIPHON/PUMP IS PICKING UP SEDIMENT. IF FILTER BAGS ARE USED, CONTRACTOR SHALL DISPOSE OF BAGS OFF SITE UPON COMPLETION OF THE PROJECT.

DELETE SUBSECTION 157.04

201 – CLEARING AND GRUBBING

MODIFY SUBSECTION 201.01 TO ADD THE FOLLOWING:

PRIMARY CLEARING LIMITS INCLUDE THE LIMITS OF CONSTRUCTION. SECONDARY LIMITS SHALL EXTEND TO AND INCLUDE ANY ACCESS ROADWAYS, LAYDOWN AND STORAGE/STAGING AREAS AS REQUIRED TO COMPLETE THE WORK.

203 - REMOVAL OF STRUCTURES AND OBSTRUCTIONS

DELETE SUBSECTION 203.01 AND REPLACE WITH THE FOLLOWING:

203.01

THIS WORK CONSISTS OF REMOVING ALL OR A PORTION OF THE EXISTING LAKE DRAINAGE PIPE AND APPURTENANCES.

DELETE SUBSECTION 203.04 AND REPLACE WITH THE FOLLOWING:

203.04 REMOVING MATERIAL

EXISTING CULVERT AND APPURTENANCES MARKED AS TO BE REMOVED SHALL BE REMOVED IN THEIR ENTIRETY AND DISPOSED OF OFF SITE AT A RECYCLING FACILITY OR LANDFILL.

204 – EXCAVATION AND EMBANKMENT

DELETE SUBSECTION 204.01 AND REPLACE WITH THE FOLLOWING:

204.01

THIS WORK CONSISTS OF EXCAVATION AND THE CONSTRUCTION OF EARTH EMBANKMENTS, OTHER EARTHFILLS, AND EARTH BACKFILLS REQUIRED BY THE DRAWINGS AND SPECIFICATIONS.

DELETE SUBSECTION 204.02 AND REPLACE WITH THE FOLLOWING:

204.02 DEFINITIONS AND REFERENCES

EARTHFILL IS COMPOSED OF NATURAL EARTH MATERIALS THAT CAN BE PLACED AND COMPACTED BY CONSTRUCTION EQUIPMENT OPERATED CONVENTIONALLY.

EARTH BACKFILL IS COMPOSED OF NATURAL EARTH MATERIAL PLACED AND COMPACTED IN CONFINED SPACES OR ADJACENT TO STRUCTURES (INCLUDING PIPES) BY HAND TAMPING, MANUALLY DIRECTED POWER TAMPERS OR VIBRATING PLATES, OR THEIR EQUIVALENT.

UNCLASSIFIED EXCAVATION IS DEFINED AS THE EXCAVATION OF ALL MATERIALS ENCOUNTERED, INCLUDING ROCK MATERIALS, REGARDLESS OF THEIR NATURE OR THE MANNER IN WHICH THEY ARE REMOVED.

ASTM D422 - STANDARD TEST METHOD FOR PARTICLE-SIZE ANALYSIS OF SOILS (GRAIN SIZE WITH HYDROMETER)

ASTM D698 - STANDARD TEST METHODS FOR LABORATORY COMPACTION CHARACTERISTICS OF SOIL USING STANDARD EFFORT (12,400 FT-LBF/FT3).

ASTM D1556 – STANDARD TEST METHOD FOR DENSITY OF SOIL IN-PLACE BY THE SAND-CONE METHOD.

ASTM D2216 - STANDARD TEST METHOD FOR LABORATORY DETERMINATION OF WATER (MOISTURE) CONTENT OF SOIL AND ROCK BY MASS.

ASTM D2487 – STANDARD PRACTICES FOR CLASSIFICATION OF SOIL FOR ENGINEERING PURPOSES (UNIFIED SOIL CLASSIFICATION SYSTEM)

ASTM D2922 - STANDARD TEST METHOD FOR DENSITY OF SOIL AND SOIL-AGGREGATE IN-PLACE BY NUCLEAR METHODS (SHALLOW DEPTH).

ASTM D2937 - STANDARD TEST METHOD FOR DENSITY OF SOIL IN-PLACE BY THE DRIVE-CYLINDER METHOD TEST.

ASTM D4318 - STANDARD TEST METHODS FOR LIQUID LIMIT, PLASTIC LIMIT, AND PLASTICITY INDEX OF SOILS.

DELETE SUBSECTION 204.03 AND REPLACE WITH THE FOLLOWING:

204.03 EXCAVATION AND MATERIALS

EXCAVATIONS MUST COMPLY WITH THE OCCUPATIONAL SAFETY AND HEALTH ADMINISTRATION CONSTRUCTION INDUSTRY STANDARDS SUBPART P, EXCAVATIONS, TRENCHING, AND SHORING (29 CFR PT. 1926). ALL EXCAVATIONS MUST BE COMPLETED AND MAINTAINED IN A SAFE AND STABLE CONDITION THROUGHOUT THE TOTAL CONSTRUCTION PHASE. STRUCTURE AND TRENCH EXCAVATIONS MUST BE COMPLETED TO THE SPECIFIED ELEVATIONS AND TO THE LENGTH AND WIDTH REQUIRED TO SAFELY INSTALL, ADJUST, AND REMOVE ANY FORMS, BRACING, OR SUPPORTS NECESSARY FOR THE INSTALLATION OF THE WORK. EXCAVATIONS OUTSIDE THE LINES AND LIMITS SHOWN ON THE DRAWINGS OR SPECIFIED HEREIN ARE REQUIRED TO MEET SAFETY REQUIREMENTS AND MUST BE THE RESPONSIBILITY OF THE CONTRACTOR IN CONSTRUCTING AND MAINTAINING A SAFE, STABLE EXCAVATION.

EXCAVATION SHALL BE UNCLASSIFIED.

ALL FILL/BORROW MATERIAL MUST BE OBTAINED FROM THE TOP, FRONT OR NEAR SIDES OF THE EXISTING EMBANKMENT DAM. THE SELECTION, BLENDING, ROUTING, AND DISPOSITION OF MATERIAL IN THE VARIOUS FILLS MUST BE SUBJECT TO APPROVAL BY THE CO/COR.

FILL MATERIALS MUST CONTAIN NO FROZEN SOIL, SOD, BRUSH, ROOTS, OR OTHER PERISHABLE MATERIAL. ROCK PARTICLES LARGER THAN TWO-THIRDS OF THE SPECIFIED PRE-COMPACTION LAYER DEPTH FOR EACH TYPE OF FILL MUST BE REMOVED, OR REDUCED IN SIZE, PRIOR TO COMPACTION OF THE FILL.

DELETE SUBSECTION 204.04 AND REPLACE WITH THE FOLLOWING:

204.04 FOUNDATION PREPARATION

THE TYPES OF MATERIAL USED IN THE VARIOUS FILLS MUST BE AS LISTED AND DESCRIBED IN THE SPECIFICATIONS AND DRAWINGS. FOUNDATIONS FOR EARTHFILL MUST BE STRIPPED TO REMOVE VEGETATION AND OTHER UNSUITABLE MATERIAL OR MUST BE EXCAVATED AS SPECIFIED.

EXCEPT AS OTHERWISE SPECIFIED, EARTH FOUNDATION SURFACES MUST BE GRADED TO REMOVE SURFACE IRREGULARITIES AND MUST BE SCARIFIED PARALLEL TO THE AXIS OF THE FILL OR OTHERWISE ACCEPTABLY SCORED AND LOOSENED TO A MINIMUM DEPTH OF 2 INCHES. THE MOISTURE CONTENT OF THE LOOSENED MATERIAL MUST BE CONTROLLED AS SPECIFIED FOR THE EARTHFILL AND THE SURFACE MATERIAL OF THE FOUNDATION MUST BE COMPACTED AND BONDED WITH THE FIRST LAYER OF EARTHFILL AS SPECIFIED FOR SUBSEQUENT LAYERS OF EARTHFILL.

EARTH ABUTMENT SURFACES MUST BE FREE OF LOOSE, UNCOMPACTED EARTH IN EXCESS OF 2 INCHES IN DEPTH NORMAL TO THE SLOPE AND MUST BE AT SUCH A MOISTURE CONTENT THAT THE EARTHFILL CAN BE COMPACTED AGAINST THEM TO PRODUCE A GOOD BOND BETWEEN THE FILL AND THE ABUTMENTS.

ROCK FOUNDATION AND ABUTMENT SURFACES MUST BE CLEARED OF ALL LOOSE MATERIAL BY HAND OR OTHER EFFECTIVE MEANS AND MUST BE FREE OF STANDING WATER WHEN FILL IS PLACED UPON THEM. OCCASIONAL ROCK OUTCROPS IN EARTH FOUNDATIONS FOR EARTHFILL, EXCEPT IN DAMS AND OTHER STRUCTURES DESIGNED TO RESTRAIN THE MOVEMENT OF WATER, MUST NOT REQUIRE SPECIAL TREATMENT IF THEY DO NOT INTERFERE WITH COMPACTION OF THE FOUNDATION AND INITIAL LAYERS OF THE FILL OR THE BOND BETWEEN THE FOUNDATION AND THE FILL.

FOUNDATION AND ABUTMENT SURFACES MUST BE NO STEEPER THAN ONE HORIZONTAL TO ONE VERTICAL UNLESS OTHERWISE SPECIFIED. TEST PITS OR OTHER CAVITIES MUST BE FILLED WITH COMPACTED EARTHFILL CONFORMING TO THE SPECIFICATIONS FOR THE EARTHFILL TO BE PLACED UPON THE FOUNDATION.

DELETE SUBSECTION 204.05 AND REPLACE WITH THE FOLLOWING:

204.05 FOUNDATION PREPARATION

THE TYPES OF MATERIAL USED IN THE VARIOUS FILLS MUST BE AS LISTED AND DESCRIBED IN THE SPECIFICATIONS AND DRAWINGS. FOUNDATIONS FOR EARTHFILL MUST BE STRIPPED TO REMOVE VEGETATION AND OTHER UNSUITABLE MATERIAL OR MUST BE EXCAVATED AS SPECIFIED.

DELETE SUBSECTION 204.06 AND REPLACE WITH THE FOLLOWING:

204.06 PLACEMENT

EARTHFILL MUST NOT BE PLACED UNTIL THE REQUIRED EXCAVATION AND FOUNDATION PREPARATION HAVE BEEN COMPLETED AND THE FOUNDATION HAS BEEN INSPECTED AND APPROVED BY THE CO/COR. EARTHFILL MUST NOT BE PLACED UPON A FROZEN SURFACE NOR HAVE SNOW, ICE, OR FROZEN MATERIAL INCORPORATED IN THE EARTHFILL MATRIX.

EARTHFILL MUST BE PLACED IN APPROXIMATELY HORIZONTAL LAYERS. THE THICKNESS OF EACH LAYER BEFORE COMPACTION MAY BE DETERMINED BY SOILS TESTING AND ONSITE TRIALS TO ACHIEVE 95% MAXIMUM DRY DENSITY BUT MUST NOT EXCEED THE THICKNESS SPECIFIED IN FIGURE 23-2.

UNLESS OTHERWISE SPECIFIED ON THE PLANS OR APPROVED BY THE CO/COR BASED ON ONSITE TESTING AND TECHNICIAN CONFIRMATION, COMPACTION REQUIREMENTS FOR EACH LAYER OF FILL MATERIAL ARE AS SHOWN IN TABLE 1.

HAND-COMPACTED EARTH BACKFILL MUST BE PLACED IN LAYERS WHOSE THICKNESS BEFORE COMPACTION DOES NOT EXCEED THE MAXIMUM THICKNESS SPECIFIED FOR LAYERS OF EARTH BACKFILL COMPACTED BY MANUALLY DIRECTED POWER TAMPERS.

PLACE EARTH BACKFILL IN A MANNER THAT PREVENTS DAMAGE TO THE STRUCTURES AND ALLOWS THE STRUCTURES TO ASSUME THE LOADS FROM THE EARTH BACKFILL GRADUALLY AND UNIFORMLY. THE HEIGHT OF THE EARTH BACKFILL ADJACENT TO A STRUCTURE MUST BE INCREASED AT APPROXIMATELY THE SAME RATE ON ALL SIDES OF THE STRUCTURE.

MEET THE FOLLOWING ADDITIONAL REQUIREMENTS FOR EARTHFILL AND EARTH BACKFILL IN DAMS, LEVEES, AND OTHER STRUCTURES DESIGNED TO RESTRAIN THE MOVEMENT OF WATER.

A) THE DISTRIBUTION OF MATERIALS THROUGHOUT EACH ZONE MUST BE ESSENTIALLY UNIFORM AND THE EARTHFILL FREE FROM LENSES, POCKETS, STREAKS, OR LAYERS OF MATERIAL DIFFERING SUBSTANTIALLY IN TEXTURE, MOISTURE CONTENT, OR GRADATION FROM THE SURROUNDING MATERIAL. ZONE EARTHFILLS MUST BE CONSTRUCTED CONCURRENTLY UNLESS OTHERWISE SPECIFIED.

B) SCARIFIED THE SURFACE OF EACH LAYER PARALLEL TO THE AXIS OF THE FILL TO AT MINIMUM A DEPTH OF 2 INCHES BEFORE THE NEXT LAYER IS PLACED.

C) THE TOP SURFACE OF EMBANKMENTS MUST BE MAINTAINED APPROXIMATELY LEVEL DURING CONSTRUCTION WITH TWO EXCEPTIONS: A CROWN OR CROSS-SLOPE OF ABOUT 2 PERCENT MUST BE MAINTAINED TO ENSURE EFFECTIVE DRAINAGE, OR AS OTHERWISE SPECIFIED FOR DRAINFILL OR SECTIONAL ZONES.

D) CONSTRUCT DAM EMBANKMENTS IN CONTINUOUS LAYERS FROM ABUTMENT TO ABUTMENT EXCEPT WHERE OPENINGS TO FACILITATE CONSTRUCTION OR TO ALLOW THE PASSAGE OF STREAMFLOW DURING CONSTRUCTION ARE SPECIFICALLY AUTHORIZED IN THE CONTRACT.

E) EMBANKMENTS BUILT AT DIFFERENT LEVELS AS DESCRIBED UNDER PARAGRAPHS C OR D ABOVE MUST BE CONSTRUCTED SO THAT THE SLOPE OF THE BONDING SURFACES BETWEEN EMBANKMENTS IN PLACE AND EMBANKMENTS TO BE PLACED IS NOT STEEPER THAN 3 FEET HORIZONTAL TO 1 FOOT VERTICAL. THE BONDING SURFACE OF THE EMBANKMENT IN PLACE MUST BE STRIPPED OF ALL MATERIAL NOT MEETING THE REQUIREMENTS OF THIS SPECIFICATION AND MUST BE SCARIFIED, MOISTENED, AND RECOMPACTED WHEN THE NEW EARTHFILL IS PLACED AGAINST IT. THIS ENSURES A GOOD BOND WITH THE NEW EARTHFILL AND OBTAINS THE SPECIFIED MOISTURE CONTENT AND DENSITY AT THE CONTACT OF THE IN-PLACE AND NEW EARTHFILLS.

Figure 23-2: Compaction class

Grading Characteristics of Soil Fill Material		Appropriate Compaction Classes	Maximum Layer Thickness (Before Compaction)			
% > no. 4	% fines (passing #200)		tamping roller (in)	pneum. roller (in)	vibrating roller (in)	40,000 lb track trctr (in)
0 -35	Over 5	A	9	9	---	---
	Under 5	A	9	12	24	---
		B, C	---	18	30	12
35-65	25-50	A	9	12	24	---
		B, C	9	18	24	---
	5-25	A	---	12	24	---
		B, C	---	18	24	---
	Under 5	B, C	---	24	24	18
Over 65	Over 5	B, C	---	18	24	---
	Under 5	B, C	---	24	24	18

NOTE: TABULATED VALUES ARE UPPER LIMITS. ACTUAL MAXIMUM LAYER THICKNESS FOR UNIFORM COMPACTION OF A GIVEN SOIL MATERIAL MAY BE SUBSTANTIALLY LOWER. MAXIMUM SIZE OF ROCK OR ROCK FRAGMENTS SHOULD NOT EXCEED TWO-THIRDS OF THE LAYER THICKNESS PRIOR TO COMPACTION. SOIL PLASTICITY SHOULD BE A CONSIDERATION.

Table 1 - Equipment Compaction Requirements

Equipment Type		Applicable Soils[1]	Maximum Fill Height[2] (feet)	Layer Thickness[3] (inches)	Minimum Passes[4]
Sheepsfoot roller (10,000 lb. min. operating weight)		ML, MH, CL, CH or SM, SC, GM, GC with >20% fines	None	9	1
Vibratory tamping roller (9,000 lb. min. operating weight)		SM, SC, GM, GC	None	9	2
Rubber-tired scraper (fully loaded)		GM, GC, SM, SC, ML, MH, CL, CH	20	9	1
Rubber-tired front end loader (fully loaded)		GM, GC, SM, SC, ML, MH, CL, CH	20	6	1
Track-type crawler (standard tracks)	30,000 lb. min.	GM, GC, SM, SC, ML, CL	10**	6	2
		SP, SW, GP, GW	6**	12	4
		CL, ML, SC, SM	15##	3	2
	less than 30,000 lb.	GM, GC, GP, GW, SM, SC, SP, SW, ML, CL	6**	6	2
Farm tractor (2,400 lb. min.)		GM, GC, SM, SC, ML, MH, CL, CH	15	6	2
Steel drum vibratory roller (10,000 lb. min.)		SP, SW, GP, GW	None**	12	2

[1] Unified Soil Classification System.

[2] Measured from the top of the fill to the lowest point along the centerline of the fill.

[3] Prior to Compaction.

[4] The Technician shall determine if adequate compaction is being achieved. Additional passes may be required.

** The fill shall not have a permanent body of water stored against it.

This method may only be used for embankments that will not have the potential for a permanent body of water stored against it that is greater than 1/4 acre in surface area or more than 6 feet deep.

DELETE SUBSECTION 204.07 AND REPLACE WITH THE FOLLOWING:

204.07 CONTROL OF MOISTURE CONTENT

DURING PLACEMENT AND COMPACTION OF EARTHFILL AND EARTH BACKFILL, THE MOISTURE CONTENT OF THE MATERIAL BEING PLACED MUST BE MAINTAINED WITHIN THE SPECIFIED RANGE.

THE MOISTURE CONTENT OF THE FILL MATRIX AT THE TIME OF COMPACTION MUST BE NEITHER LESS THAN 2 PERCENT BELOW OPTIMUM MOISTURE CONTENT NOR MORE THAN 2 PERCENT ABOVE OPTIMUM MOISTURE CONTENT.

THE MOISTURE CONTENT OF THE FILL MATERIAL MUST BE MAINTAINED WITHIN THE LIMITS REQUIRED TO: (1) PREVENT BULKING OR DILATANCY OF THE MATERIAL UNDER THE ACTION OF THE HAULING OR COMPACTING EQUIPMENT, (2) PREVENT THE ADHERENCE OF THE EARTHFILL MATERIAL TO THE TREADS AND TRACKS OF THE EQUIPMENT, AND (3) ENSURE THE CRUSHING AND BLENDING OF THE SOIL CLODS AND AGGREGATIONS INTO A REASONABLY HOMOGENEOUS MASS.

THE APPLICATION OF WATER TO THE EARTHFILL MATERIAL MUST BE ACCOMPLISHED AT THE BORROW AREAS INSOFAR AS PRACTICABLE. WATER MAY BE APPLIED BY SPRINKLING THE MATERIAL AFTER PLACEMENT ON THE EARTHFILL, IF NECESSARY. OBTAIN A UNIFORM MOISTURE DISTRIBUTION BY DISKING.

MATERIAL THAT IS TOO WET WHEN DEPOSITED ON THE EARTHFILL MUST EITHER BE REMOVED OR DRIED TO THE SPECIFIED MOISTURE CONTENT PRIOR TO COMPACTION.

IF THE TOP SURFACE OF THE PRECEDING LAYER OF COMPACTED EARTHFILL OR A FOUNDATION OR ABUTMENT SURFACE IN THE CONTACT ZONE WITH THE EARTHFILL BECOMES TOO DRY TO PERMIT SUITABLE BOND, IT MUST EITHER BE REMOVED OR SCARIFIED AND MOISTENED BY SPRINKLING TO AN ACCEPTABLE MOISTURE CONTENT BEFORE PLACEMENT OF THE NEXT LAYER OF EARTHFILL.

DELETE SUBSECTION 204.08 AND REPLACE WITH THE FOLLOWING:

204.08 COMPACTION

EARTHFILL. EARTHFILL MUST BE COMPACTED ACCORDING TO THE FOLLOWING REQUIREMENTS FOR THE CLASS OF COMPACTION SPECIFIED:

> CLASS A COMPACTION. COMPACT EACH LAYER OF EARTHFILL AS NECESSARY TO PROVIDE THE DENSITY OF THE EARTHFILL MATRIX NOT LESS THAN 95% MAXIMUM DRY DENSITY THE EARTHFILL MATRIX IS DEFINED AS THE PORTION OF THE EARTHFILL MATERIAL FINER THAN THE MAXIMUM PARTICLE SIZE ALLOWED IN THE REFERENCE COMPACTION TEST METHOD SPECIFIED (ASTM D698 OR ASTM D1557).
>
> CLASS B COMPACTION. COMPACT EACH LAYER OF EARTHFILL TO A MASS DENSITY NOT LESS THAN 95% MAXIMUM DRY DENSITY.
>
> CLASS C COMPACTION. COMPACT EACH LAYER OF EARTHFILL BY THE SPECIFIED NUMBER OF PASSES OF THE TYPE AND WEIGHT OF ROLLER OR OTHER EQUIPMENT SPECIFIED OR BY AN EQUIVALENT APPROVED METHOD. EACH PASS MUST CONSIST OF AT LEAST ONE PASSAGE OF THE ROLLER WHEEL OR DRUM OVER THE ENTIRE SURFACE OF THE LAYER.

EARTH BACKFILL. COMPACT EARTH BACKFILL ADJACENT TO STRUCTURES TO A DENSITY EQUIVALENT TO THAT OF THE SURROUNDING IN-PLACE EARTH MATERIAL OR ADJACENT REQUIRED EARTHFILL OR EARTH BACKFILL. COMPACTION MUST BE ACCOMPLISHED BY HAND TAMPING OR MANUALLY DIRECTED POWER TAMPERS, PLATE VIBRATORS, WALK-BEHIND, MINIATURE, OR SELF-PROPELLED ROLLERS. UNLESS OTHERWISE SPECIFIED, HEAVY EQUIPMENT, INCLUDING BACKHOE-MOUNTED POWER TAMPERS OR VIBRATING COMPACTORS, AND MANUALLY DIRECTED VIBRATING ROLLERS MUST NOT BE OPERATED WITHIN 3 FEET OF ANY STRUCTURE. TOWED OR SELF-PROPELLED VIBRATING ROLLERS MUST NOT BE OPERATED WITHIN 5 FEET OF ANY STRUCTURE. COMPACTION BY MEANS OF DROP WEIGHTS OPERATING FROM A CRANE OR HOIST IS NOT PERMITTED.

HEAVY EQUIPMENT. THE PASSAGE OF HEAVY EQUIPMENT WILL NOT BE ALLOWED:

A. OVER CAST-IN-PLACE CONDUITS WITHIN 14 DAYS AFTER PLACEMENT OF THE CONCRETE

B. OVER CRADLED OR BEDDED PRECAST CONDUITS WITHIN 7 DAYS AFTER PLACEMENT OF THE CONCRETE CRADLE OR BEDDING

C. OVER ANY TYPE OF CONDUIT UNTIL THE BACKFILL HAS BEEN PLACED ABOVE THE TOP SURFACE OF THE STRUCTURE TO A HEIGHT EQUAL TO ONE-HALF THE CLEAR SPAN WIDTH OF THE STRUCTURE OR PIPE OR 3 FEET, WHICHEVER IS GREATER.

COMPACTING ADJACENT TO STRUCTURES. COMPACTING OF EARTH BACKFILL ADJACENT TO STRUCTURES MUST NOT BE STARTED UNTIL THE CONCRETE HAS ATTAINED THE STRENGTH SPECIFIED IN SECTION J FOR THIS PURPOSE. THE STRENGTH IS DETERMINED BY COMPRESSION TESTING OF TEST CYLINDERS CAST BY THE CONTRACTOR'S QUALITY CONTROL PERSONNEL FOR THIS PURPOSE AND CURED AT THE WORKSITE IN THE MANNER SPECIFIED IN ASTM C31 FOR DETERMINING WHEN A STRUCTURE MAY BE PUT INTO SERVICE.

PLACEMENT INTERVAL AGAINST CONCRETE. WHEN THE REQUIRED STRENGTH OF THE CONCRETE IS NOT SPECIFIED AS DESCRIBED ABOVE, COMPACTION OF EARTH BACKFILL ADJACENT TO STRUCTURES MUST NOT BE STARTED UNTIL THE FOLLOWING TIME INTERVALS SHOWN IN FIGURE 23-1 HAVE ELAPSED AFTER PLACEMENT OF THE CONCRETE.

Figure 23-1 Time interval before placing backfill

Structure	Time interval (days)
Vertical or near-vertical walls with earth loading on one side only	14
Walls backfilled on both sides simultaneously	7
Conduits and spillway risers, cast-in-place (with inside forms in place)	7
Conduits and spillway risers, cast-in-place (inside forms removed)	14
Conduits, pre-cast, cradled	2
Conduits, pre-cast, bedded	1
Cantilever outlet bents (backfilled both sides simultaneously)	3

DELETE SUBSECTION 204.09 AND REPLACE WITH THE FOLLOWING:

204.09 REWORKING OR REMOVAL AND REPLACEMENT OF DEFECTIVE EARTHFILL

EARTHFILL PLACED AT DENSITIES LOWER THAN THE SPECIFIED MINIMUM DENSITY OR AT MOISTURE CONTENTS OUTSIDE THE SPECIFIED ACCEPTABLE RANGE OF MOISTURE CONTENT, OR OTHERWISE NOT CONFORMING TO THE REQUIREMENTS OF THE SPECIFICATIONS MUST BE REWORKED TO MEET THE REQUIREMENTS OR REMOVED AND REPLACED BY ACCEPTABLE EARTHFILL. THE REPLACEMENT EARTHFILL AND THE FOUNDATION, ABUTMENT, AND EARTHFILL SURFACES UPON WHICH IT IS PLACED MUST CONFORM TO ALL REQUIREMENTS OF THIS SPECIFICATION FOR FOUNDATION PREPARATION, APPROVAL, PLACEMENT, MOISTURE CONTROL, AND COMPACTION.

DELETE SUBSECTION 204.10 AND REPLACE WITH THE FOLLOWING:

204.10 TESTING

DURING THE COURSE OF THE WORK, THE CONTRACTOR MUST PERFORM QUALITY CONTROL TESTS, AS APPLICABLE, TO IDENTIFY EARTHFILL AND EARTH BACKFILL MATERIALS; DETERMINE THE REFERENCE MAXIMUM DENSITY AND OPTIMUM MOISTURE CONTENT IF BELIEVED TO DIFFER FROM THOSE PROVIDED WITHIN THE SOILS REPORT, SUBSECTION 206; AND DOCUMENT THAT THE MOISTURE

CONTENT OF MATERIAL AT THE TIME OF COMPACTION AND THE DENSITY OF EARTHFILL AND EARTH BACKFILL IN PLACE CONFORM TO THE REQUIREMENTS OF THIS SPECIFICATION.

DETERMINING REFERENCE MAXIMUM DENSITY AND OPTIMUM MOISTURE CONTENT. UNLESS TESTED OTHERWISE, THE REFERENCE MAXIMUM DENSITY AND OPTIMUM MOISTURE CONTENT ARE PROVIDED WITHIN THE SOILS REPORT, SUBSECTION 206

DOCUMENTING SPECIFICATION CONFORMANCE. IN-PLACE DENSITIES OF EARTHFILL AND EARTH BACKFILL REQUIRING CLASS A COMPACTION MUST BE MEASURED IN ACCORDANCE WITH SUBSECTION 204.15 AND ASTM D1556, D2167, D2937, D6938, OR D8167. MOISTURE CONTENTS OF EARTHFILL AND EARTH BACKFILL AT THE TIME OF COMPACTION MUST BE MEASURED IN ACCORDANCE WITH ASTM D2216, D4643, OR D6938. VALUES OF MOISTURE CONTENT DETERMINED BY ASTM D2216 ARE CONSIDERED THE TRUE VALUE OF THE SOIL MOISTURE. VALUES OF MOISTURE CONTENT DETERMINED BY ASTM D4643 OR D6938 MUST BE VERIFIED BY COMPARISON TO VALUES OBTAINED BY ASTM D2216. VALUES OF IN-PLACE DENSITY AND MOISTURE CONTENT DETERMINED BY THESE TESTS MUST BE COMPARED TO THE MINIMUM DENSITY AND MOISTURE CONTENT RANGE SPECIFIED WITHIN THE SOILS REPORT, SUBSECTION 206.

DOCUMENTATION OF TESTING SHALL BE PROVIDED TO THE CO/COR UPON REQUEST AND NO LESS THAN WEEKLY.

CORRECTION FOR OVERSIZE PARTICLES. IF THE MATERIALS TO BE USED FOR EARTHFILL OR EARTH BACKFILL CONTAIN MORE THAN 5 PERCENT BY DRY WEIGHT OF OVERSIZE ROCK PARTICLES (PARTICLES LARGER THAN THOSE ALLOWED IN THE SPECIFIED COMPACTION TEST AND METHOD), CORRECTIONS FOR OVERSIZE PARTICLES MUST BE MADE USING THE APPROPRIATE PROCEDURES EXPLAINED IN ASTM D4718.

DELETE SUBSECTIONS 204.11 – 2004.14

MODIFY SUBSECTION 204.15 AS FOLLOWS:

204.15 ACCEPTANCE

IN-PLACE COMPACTION AND MOISTURE CONTENT TESTS:

A EMBANKMENT FILL: EACH LIFT AT A MINIMUM FREQUENCY OF 1 PER 2,500 SQ. FT.

B. PIPE INSTALLATION: EACH LIFT AT A MINIMUM FREQUENCY OF 1 PER 30 LF OF PIPE TO A DEPTH OF 2’ ABOVE THE PIPE.

DELETE SUBSECTION 204.16 AND REPLACE WITH THE FOLLOWING:

204.16 MEASUREMENT

EXCAVATION AND EMBANKMENT WILL NOT BE MEASURED FOR PAYMENT. ESTIMATED QUANTITIES ARE PROVIDED IN THE PLANS AND DO NOT ACCOUNT FOR PIPING, MINOR STRUCTURES, DEMOLITION OF TRAINING WALLS, OR CLEARING AND GRUBBING. BIDDERS ARE RESPONSIBLE FOR PERFORMING INVESTIGATIONS, SURVEYS, AND OBTAINING INFORMATION NECESSARY TO CONFIRM EXISTING CONDITIONS AND QUANTITIES.

601 - MINOR CONCRETE STRUCTURES

DELETE SUBSECTION 601.07 AND REPLACE WITH THE FOLLOWING:

601.7

SEE FP-14 TABLE 552-9 LAST ROW ON PG 418 FOR SAMPLING, TESTING, AND ACCEPTANCE REQUIREMENTS FOR CAST-IN-PLACE. NOTE: ONLY COMPRESSIVE STRENGTH WILL BE ASSESSED WITH 3 CONCRETE CYLINDERS PER A SET. WITH SETS PER 30 CUBIC YARDS, BUT NOT LESS THAN 1 PER A DAY AND NOT LESS THAN 5 SETS TOTAL.

PRECAST CONCRETE STRUCTURES SHALL BE IAW 725.09.

610 – HORIZONTAL DRAINS

REPLACE SUBSECTIONS OF 610 WITH THE FOLLOWING:

610.01

THE WORK IS APPLICABLE TO THE CONSTRUCTION OF PRINCIPAL SPILLWAY CONDUITS APPURTENANT TO EARTH DAMS USING BEDDED OR CRADLED REINFORCED CONCRETE PRESSURE PIPE. IT MAY ALSO BE APPLIED TO THE CONSTRUCTION OF ANY TYPE OF REINFORCED CONCRETE PIPE CONDUIT THAT CROSSES UNDER OR THROUGH AN EARTH DAM OR OTHER DEEP EARTHFILL AS SHOWN ON THE DRAWINGS AND/OR SPECIFIED HEREIN.

610.02 MATERIAL

CONFORM TO ASTM C361-22 CLASS A PIPE.

CONFORM TO ASTM C33 FINE CONCRETE AGGREGATE

CONFORM TO ASTM D448 STANDARD CLASSIFICATION FOR SIZES OF AGGREGATE FOR ROAD AND BRIDGE CONSTRUCTION.

SUBMIT GRADATIONS FOR FINE AND COARSE DRAIN FILTER MATERIALS AS INDICATED IN THE DRAWINGS.

610.03 LAYING THE PIPE

THE PIPE SHALL BE SET TO THE SPECIFIED LINE AND GRADE AND TEMPORARILY SUPPORTED ON PRECAST CONCRETE BLOCKS OR WEDGES. CONCRETE BLOCKS AND WEDGES USED TO TEMPORARILY SUPPORT THE PIPE DURING PLACEMENT OF CONCRETE BEDDING OR CRADLE, OR BOTH, SHALL BE A CLASS OF CONCRETE EQUAL TO OR STRONGER THAN THE CONCRETE USED TO CONSTRUCT THE BEDDING OR CRADLE. BELL AND SPIGOT PIPE SHALL BE LAID WITH THE BELLS OR GROOVES FACING UPSTREAM UNLESS OTHERWISE SPECIFIED IN SECTION 7 OR SHOWN ON THE DRAWINGS. PIPE MAY BE INSTALLED BY INITIALLY PLACING THE UPSTREAM SECTION OF PIPE AND PROGRESSING WITH PLACEMENT OF THE REMAINING SECTIONS OF PIPE IN THE DOWNSTREAM DIRECTION; HOWEVER, CARE MUST BE TAKEN TO AVOID CONTAMINATING THE JOINT WITH SOIL OR BEDDING AS THE BELL END IS SLID OVER THE SPIGOT OF THE ADJOINING PIPE.

JUST BEFORE EACH JOINT IS CONNECTED, THE CONNECTING SURFACE OF THE BELL AND SPIGOT OR SPIGOTS AND SLEEVE SHALL BE THOROUGHLY CLEANED AND DRIED. ALSO, THE RUBBER GASKET AND THE INSIDE SURFACE OF THE BELL OR SLEEVE SHALL BE LUBRICATED WITH A LIGHT FILM OF SOFT VEGETABLE SOAP COMPOUND (FLAX SOAP). THE RUBBER GASKET SHALL BE STRETCHED UNIFORMLY AS IT IS PLACED IN THE SPIGOT GROOVE TO ENSURE A UNIFORM VOLUME OF RUBBER AROUND THE CIRCUMFERENCE OF THE PIPE.

(a) METHOD 1—THE JOINT SHALL BE CONNECTED BY SLIDING THE BELL OVER THE SPIGOT OR BY SLIDING THE SPIGOT INTO THE BELL AND APPLYING A PULLING OR JACKING FORCE IN A MANNER THAT WILL ALLOW THE SPIGOT TO ENTER SQUARELY INTO THE BELL.

(b) METHOD 2— THE JOINT SHALL BE CONNECTED IN ACCORDANCE WITH THE MANUFACTURER'S INSTRUCTIONS.

(c) EITHER METHOD - WHEN THE SPIGOT HAS BEEN SEATED TO WITHIN 0.5 INCH OF ITS FINAL POSITION, THE POSITION OF THE GASKET IN THE JOINT SHALL BE CHECKED AROUND THE ENTIRE CIRCUMFERENCE OF THE PIPE BY MEANS OF A METAL FEELER GAUGE. IN ANY CASE WHERE THE GASKET IS FOUND TO BE DISPLACED, THE JOINT SHALL BE DISENGAGED AND PROPERLY RECONNECTED. AFTER THE POSITION OF THE GASKET HAS BEEN CHECKED, THE SPIGOT SHALL BE COMPLETELY PULLED INTO THE BELL AND THE SECTION OF PIPE SHALL BE ADJUSTED TO LINE AND GRADE.

610.04 FILLING JOINTS

BEFORE THE PLACEMENT OF THE BEDDING OR CRADLE, THE EXTERIOR ANNULAR SPACE BETWEEN THE ENDS OF THE PIPE SECTIONS SHALL BE CLEANED AND COMPLETELY FILLED WITH JOINT SEALING COMPOUND. BEFORE THE COMPOUND IS APPLIED, THE SURFACE AGAINST WHICH IT IS TO BE PLACED SHALL BE CLEANED OF ALL DUST, LUBRICANT, AND OTHER SUBSTANCES THAT WOULD INTERFERE WITH A BOND BETWEEN THE COMPOUND AND THE PIPE. IF RECOMMENDED BY THE MANUFACTURER OF THE COMPOUND, THE CONCRETE SURFACE SHALL BE COATED WITH A PRIMER IN ACCORDANCE WITH THE MANUFACTURER'S RECOMMENDATIONS. PRIMERS SHALL BE APPLIED TO THE CONCRETE SURFACE ONLY AND SHALL NOT COME IN CONTACT WITH THE GASKET OR GASKET SEALING SURFACE. UNLESS THE COMPOUND OR PRIMER IS SPECIFICALLY RECOMMENDED FOR USE ON MOIST CONCRETE, THE SURFACE SHALL BE DRY WHEN THE COMPOUND OR PRIMER IS APPLIED.

THE JOINT SEALING COMPOUND SHALL BE ALLOWED TO CURE UNTIL IT IS SUFFICIENTLY FIRM TO PREVENT THE ENTRY OF CONCRETE OR EARTH INTO THE JOINT. BEFORE PLACING BEDDING OR EARTH BACKFILL (EXCLUDING CONCRETE) CONTAINING PARTICLES LARGER THAN 0.25 INCH IN MAXIMUM DIMENSION WITHIN 6 INCHES OF THE JOINT SEALING COMPOUND, THE JOINTS SHALL BE COVERED BY A MINIMUM OF 2-FOOT-WIDE, 4-PLY THICK NONWOVEN FILTER FABRIC. FILTER FABRIC SHALL BE WRAPPED COMPLETELY AROUND THE JOINT AND OVERLAPPED A MINIMUM OF 12 INCHES AT THE TOP OF THE PIPE. LAP SHALL BE SECURELY FASTENED TO ENSURE FILTER FABRIC FITS SNUGLY DURING BACKFILL OPERATIONS. FILTER FABRIC IS CENTERED ON THE JOINT.

PRESSURE TESTING OF THE COMPLETED CONDUIT IS NOT REQUIRED

610.05 MEASUREMENT FOR PAYMENT

THE QUANTITY DETERMINED TO THE NEAREST FOOT BY MEASUREMENT OF THE LAID LENGTH OF PIPE ALONG THE INVERT CENTERLINE OF THE CONDUIT. PAYMENT IS MADE AT THE CONTRACT UNIT PRICE FOR THAT SIZE, TYPE, AND CLASS OF PIPE. SUCH PAYMENT CONSTITUTES FULL COMPENSATION FOR FURNISHING, TRANSPORTING, AND INSTALLING THE PIPE COMPLETE IN PLACE. THIS INCLUDES ACCESSORIES, SUCH AS WALL FITTINGS, JOINT GASKETS, COUPLING BANDS, SLEEVES, OR COLLARS, BLOCKS, WEDGES, CONCRETE CRADLE, AGGREGATES AND INSTALLATION OF FILTER DRAIN MATERIALS, AND ALL OTHER ITEMS NECESSARY AND INCIDENTAL TO THE COMPLETION OF THE WORK.

630 - RESERVED

DELETE "RESERVED" AND REPLACE WITH "WATER CONTROL GATES" AND ADD THE FOLLOWING:

630.01 SCOPE

THIS WORK CONSISTS OF FURNISHING AND INSTALLING WATER CONTROL GATES INCLUDING GATE STEMS, HOISTS, LIFTS, AND OTHER APPURTENANCES.

630.02 MATERIAL

THE GATES FURNISHED MUST SHALL BE ALUMINUM, STAINLESS STEEL OR COMBINATION THEREOF.

ALL GATES MUST BE FURNISHED, COMPLETE WITH HOISTING EQUIPMENT AND OTHER SPECIFIED APPURTENANCES.

SUBMIT MANUFACTURER'S SHOP DRAWINGS FOR APPROVAL PRIOR TO PURCHASE.

630.03 INSTALLATION

1. INSTALLATION SHALL BE IN ACCORDANCE WITH THE MANUFACTURER'S INSTRUCTIONS.
2. THE CONTRACTOR MUST INSTALL THE GATES IN A MANNER THAT PREVENTS LEAKAGE AROUND THE SEATS AND BINDING OF THE GATES DURING NORMAL OPERATION.
3. SURFACES OF METAL THAT CONCRETE WILL BE PLACED AGAINST MUST BE FREE FROM OIL, GREASE, LOOSE MILL SCALE, LOOSE PAINT, SURFACE RUST, AND OTHER DEBRIS OR OBJECTIONABLE COATINGS.
4. SECURE ANCHOR BOLTS, THIMBLES, AND SPIGOT FRAMES IN TRUE POSITIONS WITHIN THE CONCRETE FORMS AND MAINTAIN THEM IN ALIGNMENT DURING CONCRETE PLACEMENT.
5. FINISH CONCRETE SURFACES THAT RUBBER SEALS WILL BEAR OR THAT FLAT FRAMES OR PLATES ARE TO BE INSTALLED AGAINST TO PROVIDE A SMOOTH AND UNIFORM CONTACT SURFACE.
6. WHEN A FLAT FRAME IS INSTALLED AGAINST CONCRETE, PLACE A LAYER OF CONCRETE MORTAR BETWEEN THE GATE FRAME AND THE CONCRETE.
7. WHEN A GATE IS ATTACHED TO A WALL THIMBLE, APPLY A MASTIC OR RESILIENT GASKET BETWEEN THE GATE FRAME AND THE THIMBLE IN ACCORDANCE WITH THE RECOMMENDATIONS OF THE GATE MANUFACTURER.

8. ADJUST WALL PLATES, SILLS, AND PIN BRACKETS FOR RADIAL GATES AND FASTEN THEM BY GROUTING AND BOLTING AFTER THE GATES HAVE BEEN COMPLETELY ASSEMBLED IN PLACE.

9. ALIGN GATE STEMS, STEM GUIDES, AND GATE LIFTS CAREFULLY SO THAT THE STEM IS PARALLEL TO THE GUIDE BARS OR ANGLES ON THE GATE FRAME FOLLOWING INSTALLATION.

630.04 OPERATIONAL TESTS

1. AFTER THE GATES AND HOISTS (OR LIFTS) HAVE BEEN INSTALLED, THEY MUST BE CLEANED, LUBRICATED, AND OTHERWISE SERVICED BY THE CONTRACTOR IN ACCORDANCE WITH THE MANUFACTURER'S INSTRUCTIONS. THE CONTRACTOR MUST TEST THE GATE AND HOIST BY OPERATING THE SYSTEM SEVERAL TIMES THROUGHOUT ITS FULL RANGE OF OPERATION. THE CONTRACTOR MUST MAKE ANY CHANGES OR ADJUSTMENTS NECESSARY TO ENSURE SATISFACTORY OPERATION OF THE COMPLETE GATE SYSTEM. THE SLIDE GATE MANUFACTURER'S SLIDE GATE INSPECTION FORM SHALL BE COMPLETED, DOCUMENTING NUMBER OF TURNS, A SKETCH WITH INSTALLATION MEASUREMENTS VERSUS ALLOWABLE TOLERANCES, PHOTOS, ISSUES, ETC., AND SHALL BE CERTIFIED BY THE MANUFACTURER AS BEING INSTALLED CORRECTLY AND FULLY WARRANTED AS APPLICABLE.

630.05 MEASUREMENT FOR PAYMENT

THE ACCEPTED QUANTITIES WILL BE PAID AT THE CONTRACT PRICE PER UNIT OF MEASURE AS LISTED IN THE BID SCHEDULE. SUCH PAYMENT CONSTITUTES FULL COMPENSATION FOR FURNISHING, TRANSPORTING, INSTALLATION, AND TESTING OF COMPONENT, COMPLETE IN PLACE.

Federal Acquisition Regulation (FAR) and United States Department of Agriculture Acquisition Regulation (AGAR) Clauses and Provisions

The clauses and provisions contained herein are applicable to any order awarded as a result of this solicitation. The terms and conditions set forth herein supersede all other terms and conditions. Acceptance of the order in accordance with (IAW) FAR 12.201-1(b)(2) constitutes acceptance of all terms and conditions contained herein.

As part of the Revolutionary FAR Overhaul (RFO), system updates may lag policy updates. The System for Award Management (SAM) may continue to require entities to complete representations based on provisions that are not included in this solicitation. Contracting officers will rely on representations from offers based on provisions in the solicitation. Entities are not required to, nor are they able to, update their entity registration to remove these representations in SAM.

52.252-2 Clauses Incorporated by Reference Feb 1998

This solicitation incorporates one or more clauses by reference, with the same force and effect as if they were given in full text. Upon request, the Contracting Officer will make their full text available. Also the full text of the clause may be accessed electronically at Internet address https://www.acquisition.gov/far-overhaul/far-part-deviation-guide/far-overhaul-part-52

52.212-4 Terms and Conditions—Commercial Products and Commercial Services (Nov 2025)
☐ Alternate I (Nov 2025) of 52.212-4

This is a commercial construction acquisition. FAR 52.212-4 is amended as follows:

(b) *Inspection/Acceptance*. Inspection and Acceptance will be conducted in accordance with FAR 52.246-12, Inspection of Construction (Aug 1996).

(d) *Changes.* Changes will be handled in accordance with the following FAR clause(s):
☒ FAR 52.243-4, Changes (Nov 2025)
☒ FAR 52.243-5, Changes and Changed Conditions (Nov 2025)

52.203-17 Contractor Employee Whistleblower Rights (Nov 2023)
52.203-19 Prohibition on Requiring Certain Internal Confidentiality Agreements or Statements (Jan 2017)
52.222-50 Combating Trafficking in Persons (Nov 2025)
☐ Alternate I (Nov 2025) of 52.222-50
52.226-8 Encouraging Contractor Policies to Ban Text Messaging While Driving (May 2024)
52.232-39 Unenforceability of Unauthorized Obligations (Jun 2013)
52.232-40 Providing Accelerated Payments to Small Business Subcontractors (Mar 2023)
52.233-3 Protest After Award (Sep 2025)
52.233-4 Applicable Law for Breach of Contract Claim (Sep 2025)
52.240-91 Security Prohibitions and Exclusions (Nov 2025)
☐ Alternate I (Nov 2025) of 52.240-91
52.244-6 Subcontracts for Commercial Products and Commercial Services (Nov 2025)

The following clauses are applicable if checked:

☒ 52.203-6 Restrictions on Subcontractor Sales to the Government (Jun 2020) with Alternate I (Nov 2021) of 52.203-6
☒ 52.203-13 Contractor Code of Business Ethics and Conduct (Nov 2021)
☒ 52.204-9 Personal Identity Verification of Contractor Personnel Jan 2011
☒ 52.204-13 System for Award Management—Maintenance (Nov 2025)
☐ 52.204-91 Contractor identification (Nov 2025)
☒ 52.209-6 Protecting the Government's Interest When Subcontracting with Contractors Debarred, Suspended, or Proposed for Debarment (Sep 2025)
☐ 52.209-9 Updates of Publicly Available Information Regarding Responsibility Matters (Sep 2025)
☒ 52.209-10 Prohibition on Contracting with Inverted Domestic Corporations (Sep 2025)
☐ 52.219-4 Notice of Price Evaluation Preference for HUBZone Small Business Concerns (Nov 2025)
☒ 52.219-6 Notice of Total Small Business Aside (Nov 2025)
☐ Alternate I (Mar 2020).
☒ 52.219-8 Utilization of Small Business Concerns (Nov 2025)
☒ 52.219-9 Small Business Subcontracting Plan (Nov 2025)
☐ Alternate III (Nov 2025) of 52.219-9.
☐ Alternate IV (Nov 2025) of 52.219-9
☒ 52.219-14 Limitations on Subcontracting (Nov 2025)
☐ 52.219-16 Liquidated Damages—Subcontracting Plan (Nov 2025)
☐ 52.219-33 Nonmanufacturer Rule (Nov 2025)
☒ 52.222-3 Convict Labor (June 2003)
☒ 52.222-19 Child Labor—Cooperation with Authorities and Remedies (Nov 2025)
☒ 52.222-35 Equal Opportunity for Veterans (Nov 2025)
☒ Alternate I (Jul 2014) of 52.222-35
☒ 52.222-36 Equal Opportunity for Workers with Disabilities (Nov 2025)
☒ Alternate I (Jul 2014) of 52.222-36
☒ 52.222-37 Employment Reports on Veterans (Nov 2025)
☒ 52.222-40 Notification of Employee Rights Under the National Labor Relations Act (Dec 2010)
☒ 52.222-41 Service Contract Labor Standards (Aug 2018)
☒ 52.222-42 Statement of Equivalent Rates for Federal Hires (May 2014)

This Statement is for Information Only:
It is not a Wage Determination

Employee Class	Monetary Wage -- Fringe Benefits
Aircraft Mechanic	$XX.XX

☒ 52.222-43 Fair Labor Standards Act and Service Contract Labor Standards -- Price Adjustment (Multiple Year and Option Contracts) (Aug 2018)
☒ 52.222-44 Fair Labor Standards Act and Service Contract Labor Standards -- Price Adjustment (May 2014)
☐ 52.222-51 Exemption from Application of the Service Contract Labor Standards to Contracts for Maintenance, Calibration, or Repair of Certain Equipment-Requirements (May 2014)
☐ 52.222-53 Exemption from Application of the Service Contract Labor Standards to Contracts for Certain Services-Requirements (Nov 2025)
☒ 52.222-54 Employment Eligibility Verification (Nov 2025)
☒ 52.222-62 Paid Sick Leave Under Executive Order 13706 (Jan 2022)
☒ 52.223-9 Estimate of Percentage of Recovered Material Content for EPA-Designated Items (May 2008)
☐ Alternate I (May 2008) of 52.223-9
☒ 52.223-11 Ozone-Depleting Substances and High Global Warming Potential Hydrofluorocarbons (Nov 2025)
☐ 52.223-12 Maintenance, Service, Repair, or Disposal of Refrigeration Equipment and Air Conditioners (Nov 2025)
☒ 52.223-23 Sustainable Products and Services
☒ 52.224-3 Privacy Training (Jan 2017)
☐ Alternate I (Jan 2017) of 52.224-3
☒ 52.225-1 Buy American-Supplies (Nov 2025)
☒ Alternate I (Oct 2022) of 52.225-1
☐ 52.225-3 Buy American--Free Trade Agreements--Israeli Trade Act (Nov 2025)
☐ Alternate II (Nov 2025) of 52.225-3.
☐ Alternate III (Nov 2025) of 52.225-3.
☐ Alternate IV (Oct 2022) of 52.225-3
☒ 52.225-5 Trade Agreements (Nov 2023)
☐ 52.225-19 Contractor Personnel in a Designated Operational Area or Supporting a Diplomatic or Consular Mission outside the United States (May 2020)
☐ 52.225-26 Contractors Performing Private Security Functions Outside the United States (Oct 2016)
☒ 52.226-4 Notice of Disaster or Emergency Area Set-Aside (Nov 2007)
☐ 52.226-5 Restrictions on Subcontracting Outside Disaster or Emergency Area (Aug 2025)
☒ 52.229-12 Tax on Certain Foreign Procurements
☐ 52.232-29 Terms for Financing of Purchases of Commercial Products and Commercial Services (Nov 2021)
☐ 52.232-30 Installment Payments for Commercial Products and Commercial Services (Nov 2021)
☒ 52.232-33 Payment by Electronic Funds Transfer— System for Award Management (Oct 2018)
☐ 52.232-34 Payment by Electronic Funds Transfer—Other Than System for Award Management (Jul 2013)
☐ 52.232-36 Payment by Third Party (Nov 2025)

☐ 52.240-92 Security Requirements (Nov 2025)
☐ Alternate II (Nov 2025) of 52.240-92
☐ 52.240-93 Basic Safeguarding of Covered Contractor Information Systems (No 2025)
☐ 52.247-64 Preference for Privately Owned U.S.-Flag Commercial Vessels (Nov 2025)
☐ Alternate I (Apr 2023) of 52.247-64.
☐ Alternate II (Nov 2021) of 52.247-64

The Contractor shall comply with the following FAR Clauses for Commercial Construction.

52.222-6 Construction Wage Rate Requirements
52.222-7 Withholding of Funds
52.222-8 Payrolls and Basic Records
52.222-9 Apprentices and Trainees
52.222-10 Compliance with Copeland Act Requirements
52.222-11 Subcontracts (Labor Standards)
52.222-12 Contract Termination-Debarment
52.222-14 Disputes Concerning Labor Standards
52.222-15 Certificate of Eligibility
52.236-5 Material and Workmanship

The following clauses are applicable when checked:

☒ 52.222-30 Construction Wage Rate Requirements-Price Adjustment (None or Separately Specified Pricing Method (Aug 2018)
☒ 52.222-31 Construction Wage Rate Requirements-Price Adjustment (Percentage Method) (Aug 2018)
☒ 52.222-32 Construction Wage Rate Requirements-Price Adjustment (Actual Method) (Nov 2025)
☒ 52.225-9 Buy American-Construction Materials (Nov 2025)
☒ Alternate I (Oct 2022) of 52.25-9
☐ 52.225-11 Notice of Buy American Requirement-Construction Materials under Trade Agreements (Nov 2025)
☐ Alternate I (Nov 2025) (of 52.225-11
☐ Alternate II (Oct 2022) of 52.225-11
☒ 52.228-2 Additional Bond Security (Oct 1997)
☒ 52.228-5 Insurance-Work on Government Installation (Jan 1997)
☒ 52.228-11 Individual Surety-Pledge of Assets (Feb 2021)
☒ 52.228-13 Alternative Payment Protections (Jul 2020)
☒ 52.228-14 Irrevocable Letter of Credit (Nov 2014)
☒ 52.228-15 Performance and Payment Bonds-Construction (Jun 2020)
☒ 52.228-17 Individual Surety-Pledge of Assets (Bid Guarantee) (Feb 2021)
☒ 52.236-2 Differing Site Conditions (Jul 2025)
☒ 52.236-3 Site Investigation and Conditions Affecting the Work (Jul 2025)

☒ 52.236-6 Superintendent by the Contractor (Jul 2025)
☒ 52.236-7 Permits and Responsibilities (Jul 2025)
☒ 52.236-8 Other Contracts (Jul 2025)
☒ 52.236-9 Protection of Existing Vegetation, Structures, Equipment, Utilities, and Improvements (Jul 2025)
☒ 52.336-10 Operations and Storage Areas (Jul 2025)
☒ 52.236-11 Use and Possession Prior to Completion (Jul 2025)
☒ 52.236-12 Cleaning Up (Jul 2025)
☒ 52.236-13 Accident Prevention (Jul 2025)
☒ Alternate I (Nov 1991) of 52.236-13
☒ 52.236-14 Availability and Use of Utility Services (Jul 2025)
☒ 52.236-15 Schedules for Construction Contracts (Jul 2025)
☒ 52.236-16 Quantity Surveys (Jul 2025)
☒ Alternate I (Apr 1984) of 52.236-16
☒ 52.236-17 Layout of Work (Jul 2025)
☒ 52.236-21 Specifications and Drawings for Construction (Jul 2025)
☐ Alternate I (Apr 1984) of 52.236-21
☐ Alternate II (Apr 1984) of 52.236-21
☒ 52.242-14 Suspension of Work (Apr 1984)
☒ 52.248-3 Value Engineering (Oct 2025)
☐ Alternate I (Apr 1984) of 52.248-3

Other Applicable Clauses

52.217-6 Option for Increased Quantity (Mar 1989)
52.217-7 Option for Increased Quantity - Separately Priced Line Item (Mar 1989)
52.217-8 Option to Extend Services (Nov 1999)
30 calendar days prior to contract expiration
52.217-9 Option to Extend the Term of the Contract (Mar 2000)
(a) 30 Calendar days prior to contract expiration and 60 days
(c) five years and 6 months.
52.232-90 Fast Payment Procedures (Nov 2025)
52.245-1 Government Property (Sep 2021)
☐ Alternate I (Sep 2021) of 52.245-1
52.245-2 Government Property Installation Operation Services (Apr 2012)
52.245-9 Use and Charges (Apr 2012)
52.246-15 Certificate of Conformance (Apr 1984)
52.247-29 F.O.B. Origin (Feb 2006)
52.247-34 F.O.B. Destination (Jan 1991)

AGAR Clauses

452.203-71 Anti-Discrimination and Diversity, Equity, and Inclusion (DEI) Compliance (Dec 2025)

(a) By entering into this contract, the Contractor certifies that:

1. It is compliant with all applicable Federal anti-discrimination laws and the Equal Protection principles of the U.S. Constitution, and it will remain compliant for the duration of the contract.

2. Neither it nor any subcontractor or teaming partner operates or funds any program, policy, or initiative that promotes DEI in a manner that violates any applicable Federal anti-discrimination laws, including but not limited to Title VI and VII of the Civil Rights Act of 1964, or the Equal Protection principles of the U.S. Constitution, and the Contractor and any subcontractor or teaming partner will not do so for the duration of the contract.

(b) If the Contractor participates in, facilitates, or funds programs that implicate Title VI of the Civil Rights Act of 1964 or Title IX of the Education Amendments of 1972, as amended, including but not limited to grants to or for schools, colleges, universities, 4-H programs, non-governmental organization (NGO) programs, sports programs, and education-related grants to prisons or other detention facilities, the Contractor certifies that it will remain compliant with those laws, including the requirements set forth in Executive Order 14168, Defending Women from Gender Ideology Extremism and Restoring Biological Truth to the Federal Government, and Executive Order 14173, Ending Illegal Discrimination and Restoring Merit-Based Opportunity.

(c) The Contractor affirms that the above requirements are conditions of payment that go to the essence of the contract and are therefore material terms of the contract. Payments under the contract are predicated on compliance with the above requirements, and therefore the Contractor is not eligible for funding under the contract or to retain any funding under the contract absent compliance with the above requirements.

(d) This certification reflects a change in the Government's position regarding the materiality of the foregoing requirements and therefore any prior payment of similar claims does not reflect the materiality of the foregoing requirements to this contract.

(e) Submission of a knowing false statement relating to Contractor's compliance with the above requirements and/or eligibility for the contract may subject the Contractor to liability under the False Claims Act, 31 U.S.C. § 3729, and/or criminal liability, including under 18 U.S.C. §§ 287 and 1001.

(f) The Contractor must include the provisions of this clause in all subcontract solicitations.

(g) Failure on the part of the Contractor or its subcontractors to comply with the terms of this clause may be grounds for the Contracting Officer to terminate this contract for default.
(End of Clause)

452.204–70 Modification for Contract Closeout (Nov 2025)
(a) If unliquidated funds in the amount of $1000 or less remain on the contract, the Contracting Officer (Contracting Officer) shall issue a unilateral modification for deobligation. The contractor will receive a copy of the modification but will not be required to provide a signature. The

Contracting Officer shall immediately proceed with contract closeout upon completion of the period of performance, receipt and acceptance of supplies or services, and final payment.
(b) Upon contract closeout for contracts utilizing SAP: if unliquidated funds of more than $1000 remain on the contract, the Contracting Officer shall issue a bilateral modification for deobligation. The contractor will receive a copy of the modification and will be required to provide a signature. (The Contracting Officer may also request a "Contractor Release of Claims" be completed by the contractor, although not required for contracts and orders using SAP.) If the bilateral modification and Release of Claims are not returned to the Contracting Officer within 60 days, the Contracting Officer shall release the modification as unilateral and proceed with contract closeout upon completion of the period of performance, receipt and acceptance of supplies or services, and final payment.
(c) Upon contract closeout for contracts utilizing anything other than cost reimbursement, if unliquidated funds of more than $1000 remain on the contract, the Contracting Officer shall issue a bilateral modification for deobligation. The contractor will receive a copy of the modification and a ''Contractor Release of Claims'' and will be required to provide a signature on both forms. If the bilateral modification and Release of Claims are not returned to the Contracting Officer within 120 days, the Contracting Officer shall release the modification as unilateral and proceed with contract closeout upon completion of the period of performance, receipt and acceptance of supplies or services, and final payment.
(End of Clause)

452.204-71 Personal Identity Verification of Contractor Employees (Nov 2025)
(a) The contractor shall comply with the personal identity verification (PIV) policies and procedures established by the United States Department of Agriculture (USDA) Directives 4620-002 series.
(b) Should the USDA Directives 4620-002 require the exclusion of a contractor's employee, the contracting officer will notify the contractor in writing. The contractor must appoint a representative to manage compliance with the PIV policies established by the USDA Directives 4620-002 and to maintain a list of employees eligible for a USDA LincPass required for performance of the work.
(c) The responsibility of maintaining a sufficient workforce remains with the contractor. Contractor employees may be barred by the Government from performance of work should they be found ineligible or to have lost eligibility for a USDA LincPass. Failure to maintain a sufficient workforce of employees eligible for a USDA LincPass may be grounds for termination of the contract.
(d) The contractor shall insert this clause in all subcontracts when the subcontractor is required to have routine unaccompanied physical access to a Federally controlled facility and/or routine unaccompanied access to a Federally controlled information system.
(e) The PIV Sponsor for this contract is a designated program point of contact, which in most cases is the COR, unless otherwise specified in this contract. The PIV Sponsor will be available to receive contractor identity information from [hours and days to be added by CO] to [hours and days to be added by CO] at [office address for registration to be added by CO]. The Government will notify the contractor if there is a change in the PIV Sponsor, the office address, or the office hours for registration; however, it is the contractor's responsibility to meet all aspects of paragraphs (c), (d), and (e).
(End of Clause)

452.232-71 Progress Payments for Commercial Construction Contracts (Dec 2025)

(a) *Contractor entitlement to progress payments*. The Contractor may request progress payments monthly as the work proceeds, or at more frequent intervals as determined by the Contracting Officer, on estimates of work accomplished that meets the standards of quality established under the contract, as approved by the Contracting Officer.

(b) *Computation of amounts*. Progress payments will be authorized when the payment requested is properly due in accordance with this contract; the work will be performed in accordance with the contract; and there has been no impairment or diminution of the Government's security under this contract. The Contracting Officer may authorize consideration of:

3. Materials delivered on site and preparatory work;
4. Materials delivered to the Contractor at locations other than the site, if:
   i. Specifically authorized by the contract; and
   ii. The Contractor provides satisfactory evidence of title and intended use in the contract.

(c) *Contractor request for progress payments*. The Contractor's request for progress payments shall include the following:

1. An itemization of the amounts requested, related to the various elements of work required by the contract;
2. A listing of the amount included for work performed by each subcontractor;
3. A listing of the total amount of each subcontract;
4. A listing of the amounts previously paid to each subcontractor; and
5. Additional supporting data in a form and detail required by the Contracting Officer.

(d) *Contractor Certification.* Each request for progress payment shall be accompanied by the following certification:

I hereby certify, to the best of my knowledge and belief, that—

1. The amounts requested are only for performance in accordance with the specifications, terms, and conditions of the contract;
2. All payments due to subcontractors and suppliers from previous payments received under the contract have been made, and timely payments will be made from the proceeds of the payment covered by this certification, in accordance with subcontract agreements and the requirements of Chapter 39 of Title 31, United States Code;
3. This request for progress payments does not include any amounts which the prime contractor intends to withhold or retain from a subcontractor or supplier in accordance with the terms and conditions of the subcontract; and
4. This certification is not to be construed as final acceptance of a subcontractor's performance.

_____(name)
_____(title)
_____(date)

(e) *Access for verification of payment entitlement.* To verify the Contractor's entitlement to progress payments under this contract, the Contractor shall provide the Government, upon request and during normal business hours, access to the following:

1. Records and Documentation:
   (i) Certified progress payment requests and supporting documentation;
   (ii) Subcontractor and supplier invoices, payment records, and lien waivers;
   (iii) Updated schedule of values and progress schedules;
   (iv) Quality assurance and inspection reports;
   (v) Payroll records, if applicable under labor provisions.

2. Facilities and Worksite Access:
   (i) Physical access to the construction site for inspection of work progress;
   (ii) Access to off-site storage locations for materials billed but not yet incorporated into the work; or
   (iii) Access to any fabrication facilities where contract-related work is being performed.

3. Access to electronic invoicing or project management systems used to track progress and payments, if such systems are used in contract performance.

(f) *Dates for payment*. A progress payment under this clause is a contract progress payment under the Prompt Payment clause of this contract, and except as provided in paragraph (g) of this clause, approved requests shall be paid within 30 days of submittal of a proper request for payment.

(g) *Liquidation of progress payments*. Progress payments shall be liquidated by deducting from the payment of each item the total unliquidated amount of progress payments made for that separately priced unit of that line item. The liquidation amounts for each line item shall be clearly delineated in each request for progress payment submitted by the Contractor.

(h) *Security for progress payments.* In the event the Contractor fails to provide adequate security as required in this contract, no progress payment shall be made under this contract. Upon receipt of adequate security, progress payments shall be made, including all previous payments to which the Contractor is entitled, in accordance with the terms of the contract. If at any time the Contracting Officer determines that the security provided by the Contractor is insufficient, the Contractor shall promptly provide such additional security as the Contracting Officer determines necessary. In the event the Contractor fails to provide such additional security, the Contracting Officer may collect or liquidate such security that has been provided, and suspend further payments to the Contractor; the Contractor shall repay to the Government the amount of unliquidated progress payments as the Contracting Officer at his sole discretion deems repayable.

(i) *Special terms regarding termination for cause*. If this contract is terminated for cause, the Contractor shall, on demand, repay to the Government the amount of unliquidated progress payments. The Government shall be liable for no payment except as provided by the Termination for Cause paragraph of the clause at Federal Acquisition Regulation 52.212-4, Contract Terms and Conditions—Commercial Products and Commercial Services.

(j) *Reservation of rights.*

1. No payment, vesting of title under this clause, or other action taken by the Government under this clause shall-

(i) Excuse the Contractor from performance of obligations under this contract; or
(ii) Constitute a waiver of any of the rights or remedies of the parties under the contract.

2. The Government's rights and remedies under this clause-
   (i) Shall not be exclusive, but rather shall be in addition to any other rights and remedies provided by law or this contract; and
   (ii) Shall not be affected by delayed, partial, or omitted exercise of any right, remedy, power, or privilege, nor shall such exercise or any single exercise preclude or impair any further exercise under this clause or the exercise of any other right, power, or privilege of the Government.

(k) *Refund of unearned amounts*. If the Contractor, after making a certified request for progress payments, discovers that a portion or all of such request constitutes a payment for performance by the Contractor that fails to conform to the specifications, terms, and conditions of this contract (hereinafter referred to as the "unearned amount"), the Contractor shall-

1. Notify the Contracting Officer of such performance deficiency; and
2. Be obligated to pay the Government an amount (computed by the Contracting Officer in the manner provided in paragraph (j) of this clause) equal to interest on the unearned amount from the 8th day after the date of receipt of the unearned amount until-
   (i) The date the Contractor notifies the Contracting Officer that the performance deficiency has been corrected; or
   (ii) The date the Contractor reduces the amount of any subsequent certified request for progress payments by an amount equal to the unearned amount.

(l) *Retainage*. If the Contracting Officer finds that satisfactory progress was achieved during any period for which a progress payment is to be made, the Contracting Officer shall authorize payment to be made in full. However, if satisfactory progress has not been made, the Contracting Officer may retain a maximum of 10 percent of the amount of the payment until satisfactory progress is achieved. When the work is substantially complete, the Contracting Officer may retain from previously withheld funds and future progress payments that amount the Contracting Officer considers adequate for protection of the Government and shall release to the Contractor all the remaining withheld funds. Also, on completion and acceptance of each separate building, public work, or other division of the contract, for which the price is stated separately in the contract, payment shall be made for the completed work without retention of a percentage.

(m) *Title, liability, and reservation of rights*. All material and work covered by progress payments made shall, at the time of payment, become the sole property of the Government, but this shall not be construed as-

1. Relieving the Contractor from the sole responsibility for all material and work upon which payments have been made or the restoration of any damaged work; or
2. Waiving the right of the Government to require the fulfillment of all the terms of the contract.
3. The Government's rights and remedies under this clause-
   (i) Shall not be exclusive, but rather shall be in addition to any other rights and remedies provided by law or this contract; and

(ii) Shall not be affected by delayed, partial, or omitted exercise of any right, remedy, power, or privilege, nor shall such exercise or any single exercise preclude or impair any further exercise under this clause or the exercise of any other right, power, or privilege of the Government.

(n) *Reimbursement for bond premiums*. In making these progress payments, the Government shall, upon request, reimburse the Contractor for the amount of premiums paid for performance and payment bonds (including coinsurance and reinsurance agreements, when applicable) after the Contractor has furnished evidence of full payment to the surety. The retainage provisions in paragraph (l) of this clause shall not apply to that portion of progress payments attributable to bond premiums.

(o) *Final payment*. The Government shall pay the amount due the Contractor under this contract after-

1. Completion and acceptance of all work;
2. Presentation of a properly executed voucher; and
3. Presentation of release of all claims against the Government arising by virtue of this contract, other than claims, in stated amounts, that the Contractor has specifically excepted from the operation of the release. A release may also be required of the assignee if the Contractor's claim to amounts payable under this contract has been assigned under the Assignment of Claims Act of1940 (31 U.S.C.3727 and 41 U.S.C. 6305).

(p) *Limitation because of undefinitized work*. Notwithstanding any provision of this contract, progress payments shall not exceed 80 percent on work accomplished on undefinitized contract actions. A "contract action" is any action resulting in a contract, as defined in FAR subpart 2.1, including contract modifications for additional supplies or services, but not including contract modifications that are within the scope and under the terms of the contract, such as contract modifications issued pursuant to the Changes clause, or funding and other administrative changes. (End of clause)

Solicitation Information

Evaluation and Basis for Award

The provision at FAR 52.212-2, Evaluation—Commercial Products and Commercial Services is not applicable to this solicitation. In lieu of this provision, quotes will be evaluated in accordance with FAR 12.203 based on the criteria listed below. Award will be made to the offeror representing the best value to the Government.

Technical Approach:
The technical approach will evaluate the ability of the offeror to provide a sound and compliant approach that meets all requirements and shows a thorough understanding of them. It is the contractor's responsibility to ensure their quotation clearly demonstrates their capability to meet these requirements. All offerors must provide the following minimum information and documentation with their quotations to be considered responsive and have their offers evaluated:

- Ability of the offeror to meet the schedule requirements listed in the Statement of Work (SOW).
- Detailed explanation of any requirement listed in the SOW that cannot be successfully accomplished by the offeror.

Price:
The offeror shall provide pricing as requested in the Schedule of Items on page **X** of this Request for Quote. Failure to propose pricing for all individual line items may result in a quotation being excluded from further consideration. The offeror's quotation will be evaluated in accordance with FAR 12.204, to determine if it is fair and reasonable.

Past Performance:
The Government may utilize any references provided by the Contractor, along with information available from past contracts/orders with the USDA and any information found using sources such as Federal Government sources or the Contractor Performance Assessment Reporting System (CPARS) to determine if the Contractor has acceptable or neutral Past Performance. Past Performance will be evaluated using the following rating system:

- Acceptable: The contractor shows a demonstrated ability to meet contract requirements in prior or current contracts, including quality of work, timeliness, cost control, business relations, and adherence to contract terms.

- Neutral: Offeror does not have a past performance record.

- Unacceptable: The contractor has a documented history of failing to meet contract requirements, including poor quality, missed deadlines, cost overruns, lack of responsiveness, or unethical behavior.

Evaluation Method:
All quotations will be evaluated to identify the offeror presenting the most technically advantageous solution based on the stated evaluation criteria. Once the highest technically rated offeror is identified, their price will be evaluated to determine whether it is fair and reasonable. Past performance will also be assessed to ensure it is acceptable or neutral.

Award will be made to the offeror whose proposal is determined to be the highest technically rated, provided that:
- The proposed price is fair and reasonable, and
- Past performance is assessed as acceptable or neutral.

Award will not necessarily be made to the lowest-priced offeror. Award will be made to the contractor that offers the best value to the government.

Other Information

52.252-1 Solicitation Provisions Incorporated by Reference Feb 1998

This solicitation incorporates one or more solicitation provisions by reference, with the same force and effect as if they were given in full text. Upon request, the Contracting Officer will make their full text available. The offeror is cautioned that the listed provisions may include blocks that must be completed by the offeror and submitted with its quotation or offer. In lieu of submitting the full text of those provisions, the offeror may identify the provision by paragraph identifier and provide the appropriate information with its quotation or offer. Also, the full text of a solicitation provision may be accessed electronically at this/these address(es): https://www.acquisition.gov/far-overhaul/far-part-deviation-guide/far-overhaul-part-52

52.212-1 Instructions to Offerors - Commercial Products and Commercial Services (Nov 2025)

52.203-18 Prohibition on Contracting with Entities that Require Certain Internal Confidentiality Agreements or Statements-Representation (Jan 2017)
52.209-2 Prohibition on Contracting with Inverted Domestic Corporations - Representation (Sep 2025)
52.209-11 Representation by Corporations Regarding Delinquent Tax Liability or a Felony Conviction under any Federal Law (Sep 2025)
52.240-90 Security Prohibitions and Exclusions Representations and Certifications (Nov 2025)

<u>The following provisions are applicable if checked:</u>

☒ 52.203-11 Certification and Disclosure Regarding Payments to Influence Certain Federal Transactions (Sep 2024)
☒ 52.204-7 System for Award Management—Registration (Nov 2025)
☐ Alternate I (Nov 2025) to 52.204-7
☐ 52.204-90 Offeror Identification (Nov 2025)
☐ 52.207-6 Solicitation of Offers from Small Business Concerns and Small Business Teaming Arrangements or Joint Ventures (Multiple-Award Contracts) (Aug 2024)
☐ 52.209-12 Certification Regarding Tax Matters (Oct 2025)
☐ 52.219-2 Equal Low Bids (Nov 2025)
☒ 52.222-5 Construction Wage Requirements, Secondary Site of the Work (Nov 2025)
☒ 52.222-18 Certification Regarding Knowledge of Child Labor for Listed End Products (Feb 2021)
☐ 52.222-48 Exemption from Application of the Service Contract Labor Standards for Maintenance, Calibration, or Repair of Certain Equipment–Certification (Nov 2025)
☐ 52.222-52 Exemption from Application of the Service Contract Labor Standards for Certain Services-Certification (Nov 2025)
☐ 52.222-56 Certification Regarding Trafficking in Persons Compliance Plan (Oct 2020)
☒ 52.223-4 Recovered Material Certification (May 2008)
☒ 52.225-2 Buy American Certificate (Oct 2022)
☐ 52.225-4 Buy American-Free Trade Agreements-Israeli Trade Act Certificate (Nov 2025)
☒ 52.225-6 Trade Agreements-Certificate (Feb 2021)

☒ 52.225-10 Notice of Buy American Requirement- Construction Materials (May 2014)
☐ Alternate I (May 2014) of 52.225-10
☐ 52.225-12 Notice of Buy American Requirement-Construction Materials under Trade Agreements (May 2014)
☐ Alternate I (May 2014) of 52.225-12
☐ Alternate II (Nov 2023) of 52.225-12
☒ 52.226-3 Disaster or Emergency Area Representation (Nov 2007)
☒ 52.228-1 Bid Guarantee (Sep 1996)
☒ 52.229-11 Tax on Certain Foreign Procurements—Notice and Representation (Jul 2025)

Other Applicable FAR Provisions

52.217-5 Evaluation of Options (Nov 2025)
52.225-18 Place of Manufacture (Aug 2018)
52.233-2 Service of Protest (Sep 2025)

AGAR Provisions

452.203-70 Anti-Discrimination and Diversity, Equity, and Inclusion (DEI) Certification (Dec 2025)

(a) By submission of its offer, the offeror certifies that:

1. It is compliant with all applicable Federal anti-discrimination laws and the Equal Protection principles of the U.S. Constitution.
2. Neither it nor any proposed subcontractor or teaming partner operates or funds any program, policy, or initiative that promotes DEI in a manner that violates any applicable Federal anti-discrimination laws, including but not limited to Title VI and VII of the Civil Rights Act of 1964, or the Equal Protection principles of the U.S. Constitution.

(b) If the offeror participates in, facilitates, or funds programs that implicate Title VI of the Civil Rights Act of 1964 or Title IX of the Education Amendments of 1972, as amended, including but not limited to grants to or for schools, colleges, universities, 4-H programs, non-governmental organization (NGO) programs, sports programs, and education-related grants to prisons or other detention facilities, by submission of its offer, the offeror certifies that it is compliant with those laws, including the requirements set forth in Executive Order 14168, Defending Women from Gender Ideology Extremism and Restoring Biological Truth to the Federal Government, and Executive Order 14173, Ending Illegal Discrimination and Restoring Merit-Based Opportunity.

(c) The offeror affirms that the above requirements are conditions of payment that go to the essence of the contract and are therefore material terms of the contract. Payments under the contract are predicated on compliance with the above requirements, and therefore the offeror will not be eligible for funding under the contract or to retain any funding under the contract absent compliance with the above requirements.

(d) This certification reflects a change in the Government's position regarding the materiality of the foregoing requirements and therefore any prior payment of similar claims does not reflect the materiality of the foregoing requirements to this contract.

(e) Submission of a knowing false statement relating to offeror's compliance with the above requirements and/or eligibility for the contract may subject the offeror to liability under the False Claims Act, 31 U.S.C. § 3729, and/or criminal liability, including under 18 U.S.C. §§ 287 and 1001.

(f) Failure on the part of the offeror or its subcontractors to comply with the terms of this clause may be grounds for the Contracting Officer to terminate the contract for default.
(End of Provision)

ADDENDUM TO FAR 52.212-3

EMPLOYMENT OF ELIGIBLE WORKERS

WORKFORCE CERTIFICATION

Contractors are required to provide certification under this solicitation in compliance with the Migrant and Seasonal Agricultural Workers Protection Act (MSPA) and Farm Labor Contractor (FLC) Certificate of Registration requirements describing the workforce they will utilize to fulfill the contract requirements under this solicitation and any resulting contract. If the Contractor will supply workers under the H-2B Program, the Contractor is required to provide a copy of the Temporary Employment Certificate issued by DOL.

Subcontractors are bound by the same requirements for licenses and permits under this contract. **If a Prime Contractor identifies a Subcontractor as part of their workforce to accomplish the work under this solicitation, the Prime Contractor shall submit the Subcontractor's signed certification with their response to the solicitation.**

H-2B Workers: (http://www.foreignlaborcert.doleta.gov/)
[ ] Company certifies it will not be utilizing H2B Workers under any resulting contract of this solicitation.
[ ] Company will be utilizing H2B Workers (under any resulting contract of this solicitation. Provide a copy of Temporary Employment Certificate.)

MSPA Workers: (http://www.dol.gov/whd/mspa/)
[ ] Company certifies it will not be utilizing MSPA workers under any resulting contract of this solicitation.
[ ] Certifies has valid FLC certificate of registration. (Attach a copy of current certification.)
Authorization includes:
[ ] Transporting workers
[ ] Driving
[ ] Housing workers
[ ] Company has applied for certificate of registration on _____.

Contractors not currently having obtained a certificate (for each partner, if partnership) will be requested to furnish proof of having obtained a certificate prior to award of contract. Partnerships must furnish proof of registration of their assumed business name, if any, with the State of registration.
State of _____ No._____

I, on behalf of said Company, certify to the above responses.

_____
(Signature) (Date)

_____
(Printed Name) (Title)

END of ADDENDUM TO FAR 52.212-3

MIGRANT AND SEASONAL AGRICULTURAL WORKER PROTECTION ACT (MSPA)

https://www.dol.gov/agencies/whd/agriculture/mspa

This attachment shall be incorporated into any BPA Call that employs MSPA-protected employees.

Employment of Eligible Workers

1. ***General***

This contract is subject to the Migrant and Seasonal Agricultural Worker Protection Act (MSPA), 29 United States Code (U.S.C) 1801-1872, and to the U.S. Department of Labor (DOL) regulations implementing MSPA 29 Code of Federal Regulations (CFR) Part 500. MSPA eliminates activities detrimental to migrant and seasonal agricultural workers, requires registration of Farm Labor Contractors, and ensures necessary protection for the workers. Information regarding MSPA can be found at: *http://www.dol.gov/whd/mspa/index.htm*

If workers are hired under the H-2B program, (8 CFR Section 274A provisions of the Immigration and Nationality Act (INA) for the admission of nonimmigrants to the U.S. to perform temporary labor or services) a Temporary Employment Certification issued by the Office of Foreign Labor Certification (OFLC) in the Department of Labor Employment and Training Administration is required.

For further information on the requirements of the H-2B program, visit OFLC's website:

http://www.foreignlaborcert.doleta.gov/

U.S. DOL's Wage and Hour's website:

https://www.dol.gov/agencies/whd/immigration/h2b/2015-final-rule

Compliance with MSPA and the INA is a material condition of this contract. If the contractor employs any unauthorized worker(s) during the performance of this contract that violates section 274A of the INA, the Government may terminate the contract, in addition to other remedies or penalties prescribed by law.

2. ***Definitions***

a. H-2B worker: as used in this part means a nonimmigrant holding a visa authorizing the individual to legally work in the US to perform temporary labor or services. A worker with an H-2B visa (H-2B worker) may also be considered a migrant agricultural worker under MSPA depending on the type and nature of work performed.

b. Migrant Agricultural Worker and Seasonal Agricultural Worker: as used in this part means individuals employed for agricultural (including forestry) work on a seasonal or temporary basis.

- A worker, moving from one seasonal activity to another, is employed on a seasonal basis even though the worker may continue to be employed during a major portion of the year.
- An overnight absence from the migrant workers permanent place of residence is required.
- Members of the contractor's immediate family are not considered migrant or seasonal workers. Immediate family includes:
    1. Spouse
    2. Children, stepchildren, or foster children
    3. Parents, stepparents, or foster parents, or
    4. Brothers and sisters

c. Farm Labor Contractor (FLC). As used in this part means a person including an individual, partnership, association, joint stock company or a corporation, who, for any money or other valuable consideration, paid or promised to be paid, performs any recruiting, soliciting, hiring, employing, furnishing, or transporting of any migrant or seasonal agricultural worker.

3. ***Registration Requirements***

a. Any contractor providing or hiring H-2B nonimmigrants for work under this contract shall provide a copy of their Temporary Employment Certificate. General information about the H-2B program can be found on Fact Sheet # 78 at *http://www.dol.gov/whd/regs/compliance/whdfs78.htm*. Contractors can apply for the certificate through the US DOL Employment & Training Administration's on line iCERT Visa Portal System at *https://www.foreignlaborcert.doleta.gov/h-2b.cfm* or by paper application.

b. Any contractor who meets the definition in (2.c.) above providing or hiring migrant or seasonal workers to perform agricultural or manual forestry work shall first obtain a Federal DOL Farm Labor Contractor Certificate of Registration (*https://www.dol.gov/agencies/whd/forms/wh530*). The contractor shall carry the certificate at all times while engaged in contract performance and shall display it upon request. Any of the contractor's employees who perform any one or more of the activities defined as an FLC in paragraph (2.c.) must have their own FLC Employee Certificate. General information about MSPA can be found on Fact Sheet #49 at DOL Wage and Hour Divisions webpage *http://www.dol.gov/whd/regs/compliance/whdfs49.htm*.

4. ***Certifications***

The Contractor shall provide applicable H-2B Temporary Employment Certificate and/or Farm Labor Contractor Certificate as part of their representations, certifications, and acknowledgements. Subcontractor(s) meeting the definitions

above shall follow the same requirements as the Prime Contractor. It is the Prime Contractor's responsibility to ensure the Subcontractor's information is provided to the Contracting Officer.

5. ***Worker Protections***

a. Worker Information Posters

- A contractor who uses the H-2B program to meet its temporary employment needs must post and maintain the H-2B poster (WH-1505) in a conspicuous location accessible to workers at the job site.
- The contractor shall display and maintain the MSPA poster (WH-1376) on the job site in a conspicuous location accessible to workers during the contract performance period.

b. Personal protective equipment

- 29 CFR 1910 Subpart I, OSHA's General Industry personal protective equipment (PPE) standard contains the general requirements for the provision of personal protective equipment and requires employers to perform a hazard assessment to select appropriate PPE for hazards that are present or likely to be present in the workplace. OSHA requires that many categories of personal protective equipment meet or be equivalent to standards developed by the American National Standards Institute (ANSI).
- Before a worker begins operating equipment, the contractor shall train the workers on the safe operation and use of the equipment
- The contractor shall provide the appropriate personal protective equipment for the work required to be performed in the contract, wherever necessary by reason of hazards or processes encountered that may cause injury or impairment in the function of any part of the body. Except for foot protection, all PPE must be provided by the employer at no cost to the employee. Includes:
    1. Head Protection
    2. Hearing Protection
    3. Eye/Face Protection
    4. Leg Protection
    5. Foot Protection
    6. Hand Protection
- PPE must be sanitary and in reliable condition. Do not use defective or damaged PPE. PPE must be inspected prior to use on each work shift to ensure it is in serviceable condition.

- A checklist of applicable PPE guidelines typical for the work performed under this contract is provided. This does not relieve the contractor of the responsibility of performing a risk assessment or providing the necessary PPE for their operations.

  Reference *https://www.osha.gov/SLTC/personalprotectiveequipment/index.html* or OSHA 3151-12R 2003 Personnel Protective Equipment Booklet.

  The booklet can be found at: *https://www.osha.gov/Publications/osha3151.pdf*

  Manual Logging and Forestry Related activities: *https://www.osha.gov/SLTC/etools/logging/manual/logger/personal_equip.html*

  General Machine and Vehicles Logging and Forestry Related activities: *https://www.osha.gov/SLTC/etools/logging/mechanical/machines.html*

c. Field Sanitation.

   OSHA established minimum standards for field sanitation in covered agricultural settings. Refer to Fact Sheet # 51 Field Sanitation Standards under the Occupational Safety and Health Act.

6. ***Employment Requirements***

Fact Sheets with relevant information may be found at:

http://www.dol.gov/WHD/fact-sheets-index.htm

a. Contractors employing workers in forestry related work are required to comply with wage and payroll standards and recordkeeping requirements. Refer to Fact Sheet #63: Application of Federal Labor Laws to Reforestation found on the DOL Wage and Hour Division webpage.

b. Contractor Employee List. Contractors are required to maintain and provide upon request an active list of all employees performing work on the job site under this contract. The Employee List will identify employees by full name (aliases), supervisory duties if applicable, and appropriate labor Occupation Code for work performed under the Service Contract Act Wage Rates applicable to this contract. If Subcontractors are utilized, all tiers of subcontractor(s) are responsible for providing the same information for their employees to the Prime for submittal to the Contracting Officer.

7. ***Transportation***

a. The contractor shall be registered to transport employees, unless employees provide their own transportation or carpool by their own arrangement in one of their own vehicles. Authorization for each vehicle

that will be used to transport employees must appear on the contractor's certificate. If the contractor directs or requests employees to carpool, the registration requirement is applicable. Any driver, who transports workers for a fee or at the direction of the contractor, shall be registered as an FLC or an FLC employee.

b. See Fact Sheet #50: Transportation under the MSPA, for more information about the vehicle safety standards, driver's licensing requirements, and vehicle insurance requirements. Note that separate transportation requirements may apply if there are H-2B workers.

8. ***Housing***

a. The authorization to furnish housing, other than commercial lodging certified by a health authority or other appropriate agency, must appear on the contractor's certificate. Contractors should contact their local Wage and Hour Division of the DOL for further information on the requirements of the Act.

b. Camping Requirements. The Forest Service (FS) has various camping opportunities. Check with local FS unit for camping requirements, camping permits may be required. Verify local fire restriction policies. If camps will be used to house workers subject to MSPA, they are also subject to the temporary labor camp standards at 29 CFR 1910.142. The Forest Service reserves the right to terminate a camping permit at any time. These requirements are in addition to those contained in or provided for under any other applicable clause in this contract. Any violation of these conditions constitutes a breach of contract and may result in revocation of camping approval.

- Every structure used as shelter must provide protection from the elements. Where adequate heat is not provided, make other arrangements to protect workers from the cold. Cut firewood only after a District Firewood Permit is obtained.

- The campsite must not encroach beyond the boundaries designated by the Forest Service. The campsite location must minimize impacts on streams, lakes, and other bodies of water. Camping is not permitted within developed recreational sites or along primary recreational roads.

- The campsite must have a clean appearance at all times. Upon abandonment of any campsite, or termination, revocation, or cancellation of camping privileges, the contractor shall remove, within 10 calendar days, all structures and improvements except those owned by the United States, and shall restore the site, unless otherwise agreed upon in writing or in the camping permit. Structures or improvements the contractor fails to remove within the 10 calendar day period becomes the property of the United States, however, the contractor remains liable for the cost of the removal and restoration of the site.

- Unless otherwise designated by the CO, the use of the area is not exclusive and may be granted to other permittees, contractors, or recreating public. Disorderly conduct is not permitted.
- Damaging or removing any natural feature or other property of the Forest Service is prohibited.
- Servicing of equipment in the campsite is not permissible unless the campsite is within the project area.
- Provide sanitary facilities for storing food. Provide ice chests or coolers, with ice supply made from potable water, and replenish as necessary. Provide sufficient storage for perishable food items.
- Provide an adequate and convenient potable water supply in each camp for drinking and cooking purposes.
- Provide adequate toilet facilities and toilet paper for the capacity of the camp. Service and maintain facilities in a sanitary condition.
- Collect, store, and dispose of garbage in a manner to discourage rodent access, minimize attraction of flies, and prevent scattering by wind
- Maintain basic first aid supplies available, which must be under the charge of a person trained to administer first aid.

  The basic supplies must include:

  - Gauze pads (at least 4x4 inches)
  - Two large gauze pads (at least 8x10 inches)
  - Box adhesive bandages (such as band-aids)
  - One package of gauze roller bandage (at least 2-inches in width)
  - Two triangular bandages
  - Scissors
  - At least one blanket
  - Tweezers
  - Adhesive tape
  - Medical gloves, (latex or non-latex equivalent), and
  - Resuscitation device such as resuscitation bag, airway, or pocket mask.
- Wash laundry in such a way that washing and rinsing will not pollute lakes, streams, or other flowing water.
- Dispose waste water away from living and eating areas and in such a way that minimizes pollution to lakes, streams, and other flowing water.
- The contractor shall take all reasonable precautions to prevent and suppress forest fires. Do not dispose of material by burning in open

fires during the closed season established by law or regulation without the written permission from the Forest Service.

- If authorized to have an open fire, the Contractor shall comply with the following fire regulations:

    1. A shovel, axe or Pulaski, a 10-quart pail, which is full of water for immediate use, and a fire extinguisher with an Underwriters Laboratory (UL) rating of at least 1:A 10:BC is required.

    2. All fire rings or outside fireplaces must be approved by the Forest Service representative. The area must be cleared down to mineral soil for a distance of one foot outside of the ring or fireplace, and it must not have any overhanging material. Fire rings must be dismantled and material disposed prior to leaving the site.

    3. All generators and other internal combustion engines must be equipped with Forest Service approved spark arrestors and/or factory designed muffler and exhaust system in good working order. They will be located in a cleared area with the same requirements as in described in the previous paragraph.

    4. All fuel must be stored in UL approved flammable storage containers and be located at least 50 feet from any open flame or other source of ignition.

End of MSPA attachment.

Permits
The Contractor shall, without additional expense to the Government, be responsible for obtaining any necessary licenses and permits, and for complying with any Federal, State, and municipal laws, codes, and regulations applicable to the performance of the work. The Contractor shall also be responsible for all damages to persons or property that occur as a result of the Contractor's fault or negligence. The Contractor shall also be responsible for all materials delivered and work performed until completion and acceptance of the entire work, except for any completed unit of work which may have been accepted under the contract.

Note: This does not preclude expected quoter to be supplied any or all known regulatory certifications, permits, etc. to legally conduct stewardship work under this request for quote, should award be made. All expected quoters are encouraged to know the Federal and local prevailing labor laws and inspection standards for stewardship work within the State in which award is to be made. This is to include all known Farm Labor permits and timely submission for H2B-1 and Migrant Seasonal Worker Protection personnel. All posters and mandatory DOL and OSHA inspection criteria to be posted within the public work area for all workers free access may be obtained from DOL and OSHA via online downloads. The Government does not guarantee access nor full distribution of these items to the prospective awarded contractor.

This solicitation implements two FAR class deviations to ensure compliance with Executive Orders 14148, 14173, 14168 and 14208, issued since January 20, 2025. These deviations reflect recent policy updates and remove outdated requirements, as outlined below.

The following FAR provisions and clauses are hereby removed in their entirety from the IDIQ/BPA:

- 52.222-21 Prohibition of Segregated Facilities
- 52.222-22 Previous Contracts and Compliance Reports
- 52.222-23 Notice of Requirement for Affirmative Action To Ensure Equal Employment Opportunity for Construction
- 52.222-24 Preaward On-Site Equal Opportunity Compliance Evaluation
- 52.222-25 Affirmative Action Compliance
- 52.222-26 Equal Opportunity
- 52.222-27 Affirmative Action Compliance Requirements for Construction
- 52.222-29 Notification of visa denial
- 52.223-10 Waste Reduction Program (MAY 2024)
- 52.223-19 Compliance with Environmental Management Systems (MAY 2011)
- 52.223-22 Public Disclosure of Greenhouse Gas Emissions and Reduction Goals—Representation (DEC 2016)
- 52.222-55 Minimum Wages for Contractor Workers Under Executive Order 14026*

*This provision was removed to comply with the Executive Order titled *"Additional Rescissions of Harmful Executive Orders and Actions,"* dated March 14, 2025.

The following FAR clauses now include deviations to align with recent Executive Orders:

- ~~52.204-8 Annual Representations and Certifications (JAN 2025) (DEVIATION FEB 2025)~~
- **52.212-3 Offeror Representations and Certifications—Commercial Products and Commercial Services (MAY 2024) (DEVIATION FEB 2025)**
- **52.212-5 Contract Terms and Conditions Required To Implement Statutes or Executive Orders—Commercial Products and Commercial Services (JAN 2025) (DEVIATION FEB 2025)**
- ~~52.223-1 Biobased Product Certification (MAY 2024) (DEVIATION FEB 2025)~~
- ~~52.223-2 Reporting of Biobased Products Under Service and Construction Contracts (MAY 2024) (DEVIATION FEB 2025)~~
- ~~52.223-10 Waste Reduction Program (MAY 2024) (DEVIATION FEB 2025)~~
- ~~52.223-23, Sustainable Products and Services (MAY 2024 (DEVIATION FEB 2025))~~

The following references to AGAR Clauses and Provisions are hereby removed to comply with AGAR Rule 2024-22463 (89 FR 81014):

- AGAR 452.215-73 Post Award Conference (NEV 1996) /2
- AGAR 452.216-74 (FEB 1988) (Applicable to Time-and-Materials/Labor Hour BPA Calls)
- AGAR 452.219-70 Size Standards and NAICS Cose Information (SEP 2001) /2
- AGAR 452.228-70 Alternative Forms of Security (NOV 1996)
- AGAR 452.228-71 Insurance Coverage (NOV 1996)
- AGAR 452.236-77 Emergency Response (NOV 1996)
- AGAR 452.237-74 Key Personnel (FEB 1988) /2

2/ AGAR clauses and provisions that were included in full text have been retained, with only the AGAR reference removed.

The following AGAR clause is hereby included:

- AGAR 452.236-70 Emergency Response, Fire Suppression and Liability (NOV 2024)

All call orders will incorporate these changes by reference at award.

Disclaimer: System updates may lag policy updates. The System for Award Management (SAM) may continue to require entities to complete representations based on provisions that are not included in agency solicitations. Examples include 52.222-25, Affirmative Action Compliance, and paragraph (d) of 52.212-3, Offeror Representations and Certifications—Commercial Products and Commercial Services. Contracting officers will not consider these representations when making award decisions or enforce requirements. Entities are not required to, nor are they able to, update their entity registration to remove these representations in SAM.

In advancement of Section 2 of Executive Order 14208, the removal of requirements related to Executive Order 14057 eliminates all non-statutory sustainability requirements or preferences in purchases of food service wares, including paper straws. In addition to removing requirements related to Executive Order 14057, the attachment also reflects recent updates to Code of Federal Regulation citations for the U.S. Department of Agriculture's BioPreferred® Program, a statutory purchasing preference program.

These class deviations will remain in effect until rescinded or incorporated into the FAR.

FAR Overhaul | FAR Companion Guide

Oct 30, 2025

The Federal Acquisition Regulatory Council has released an update to the FAR Companion as part of the ongoing Revolutionary FAR Overhaul (RFO) Initiative, in accordance with Executive Order 14275 and OMB Memorandum M-25-26.

The following RFO update was posted on October 30, 2025:

- FAR Companion, Version 2.0, includes the initial release of FAR Companion (FC) parts 2, 3, 7, 13, 14, 15, 16, 17, 19, 20, 21, 22, 23, 24, 25, 27, 30, 32, 37, 41, 42, 44, 45, 47, 48, 52, and 53.
- Version 2.0 also includes updates to previously released content: update to FC 8.104 pertaining to "required use" contracts and providing more information and resources on Category Management, including beta version content of the Category Management Buying Guide; update to FC 8.401 pertaining to evaluation factors; updates to FC 8.401(b) and FC 12.301 removing references to debriefings; new annotation under FC 8.401(b) related to sole source justification content for FSS orders; new annotation under FC 12.001 related to contracting methods for commercial construction; update to FC 11.204 to clarify brand name or equal as distinct from brand name justifications under FAR 6.104; updates to thresholds referenced due to the October 1, 2025 inflation adjustment rule; various citation corrections throughout; and changed "Reserved" to "No additional guidance" when the FAR Companion does not provide any practice recommendations for that associated FAR part.
- FAR Companion, Version 2 is posted on www.acquisition.gov/far-overhaul.

To view the FAR Companion, Version 2.0. inclusive of all parts and updates, visit: https://www.acquisition.gov/sites/default/files/page_file_uploads/far-companion.pdf

To view all available rewritten FAR Parts and agency deviations, visit: https://www.acquisition.gov/far-overhaul/far-part-deviation-guide.

Stay informed. View the latest FAR Overhaul news and announcements at: https://www.acquisition.gov/far-overhaul.

Incorporate the mandatory contract clause FAR 52.222 90, Addressing DEI Discrimination by Federal Contractors (Apr 2026), as required by Executive Order 14398.

"General Decision Number: MO20260001 01/09/2026

Superseded General Decision Number: MO20250001

State: Missouri

Construction Types: Heavy and Highway

Counties: Missouri Statewide.

HEAVY AND HIGHWAY CONSTRUCTION PROJECTS

Modification Number	Publication Date
0	01/02/2026
1	01/09/2026

CARP0002-002 05/01/2024

ST. LOUIS COUNTY AND CITY

	Rates	Fringes
Carpenters	$ 41.71	21.85

CARP0005-006 05/01/2024

CASS (Richards-Gebauer AFB ONLY), CLAY, JACKSON, PLATTE AND RAY COUNTIES

	Rates	Fringes
Carpenters:		
CARPENTERS & LATHERS	$ 44.63	22.40
MILLWRIGHTS & PILEDRIVERS	$ 44.63	22.40

CARP0011-001 05/01/2024

	Rates	Fringes
Carpenter and Piledriver		
ADAIR, AUDRAIN (West of Hwy 19), BOONE, CALLAWAY, CHARITON, COLE, COOPER, HOWARD, KNOX,LINN, MACON, MILLER, MONITEAU,MONROE, OSAGE, PUTNAM, RANDOLPH, SCHUYLER, SHELBY AND SULLIVAN COUNTIES	$ 35.61	22.40
ATCHISON, ANDREW, BATES, CALDWELL, CARROLL,DAVIESS, DEKALB,GENTRY, GRUNDY, HARRISON, HENRY, HOLT, LIVINGSTON, MERCER, NODAWAY,ST. CLAIR, SALINE AND WORTH COUNTIES	$ 34.98	22.40
AUDRAIN (East of Hwy.19), RALLS, MARION, LEWIS, CLARK AND SCOTLAND COUNTIES	$ 35.61	22.40
BARRY, BARTON, CAMDEN, CEDAR, CHRISTIAN, DADE, DALLAS, DOUGLAS, GREENE, HICKORY,JASPER, LACLEDE, LAWRENCE, MCDONALD,		

```
     NEWTON, OZARK, POLK,
     STONE, TANEY, VERNON,
     WEBSTER AND WRIGHT COUNTIES.$ 33.25            22.40
     BENTON, MORGAN AND PETTIS...$ 34.98            22.40
     BOLLINGER, BUTLER, CAPE
     GIRARDEAU, DUNKLIN,
     MISSISSIPPI, NEW MADRID,
     PEMISCOT, PERRY,  STE.
     GENEVIEVE, SCOTT, STODDARD
     AND WAYNE COUNTIES..........$ 35.37            22.40
     BUCHANAN, CLINTON, JOHNSON
     AND LAFAYETTE COUNTIES......$ 34.98            22.40
     CARTER, HOWELL, OREGON AND
     RIPLEY COUNTIES.............$ 34.04            22.40
     CRAWFORD, DENT, GASCONADE,
     IRON, MADISON, MARIES,
     MONTGOMERY, PHELPS,
     PULASKI, REYNOLDS, SHANNON
     AND TEXAS COUNTIES..........$ 35.37            22.40
     FRANKLIN COUNTY.............$ 42.19            22.40
     JEFFERSON AND ST. CHARLES
     COUNTIES....................$ 42.19            22.40
     LINCOLN COUNTY..............$ 38.04            22.40
     PIKE, ST. FRANCOIS AND
     WASHINGTON COUNTIES.........$ 36.13            22.40
     WARREN COUNTY...............$ 38.04            22.40
-----------------------------------------------------------------
 ELEC0001-002 06/22/2025

BOLLINGER, BUTLER, CAPE GIRARDEAU, CARTER, DUNKLIN, FRANKLIN,
IRON, JEFFERSON, LINCOLN, MADISON, MISSISSIPPI, NEW MADRID,
PEMISCOT, PERRY,REYNOLDS, RIPLEY, ST. CHARLES, ST. FRANCOIS,
ST. LOUIS (City and County), STE. GENEVIEVE, SCOTT, STODDARD,
WARREN, WASHINGTON AND WAYNE COUNTIES


                                   Rates          Fringes

Electricians....................$ 49.29           33.642
-----------------------------------------------------------------
 ELEC0002-001 08/31/2025

ADAIR, AUDRAIN, BOONE, CALLAWAY, CAMDEN, CARTER, CHARITON,
CLARK, COLE, COOPER, CRAWFORD, DENT, FRANKLIN,  GASCONADE,
HOWARD, HOWELL, IRON, JEFFERSON, KNOX, LEWIS, LINCON, LINN,
MACON, MARIES, MARION, MILLER, MONITEAU, MONROE, MONTGOMERY,
MORGAN, OREGON, OSAGE, PERRY, PHELPS, PIKE, PULASKI, PUTNAM,
RALLS, RANDOLPH, REYNOLDS, RIPLEY, ST. CHARLES, ST. FRANCOIS,
ST. LOUIS (City and County), STE. GENEVIEVE, SCHUYLER,
SCOTLAND, SHANNON, SHELBY, SULLIVAN, TEXAS, WARREN  AND
WASHINGTON COUNTIES


                                   Rates          Fringes

Line Construction:
     Equipment Operator..........$ 49.68       36.5%+7.50
     Groundman & Truck Driver....$ 37.95       36.5%+7.50
     Lineman & Cable Splicer.....$ 57.88       36.5%+7.50
-----------------------------------------------------------------
 ELEC0053-005 08/31/2025

ANDREW, ATCHINSON, BARRY, BARTON, BATES, BENTON, BUCHANAN,
CALDWELL, CARROLL, CASS, CEDAR, CHRISTIAN, CLAY, CLINTON, DADE,
DALLAS, DAVIES, DEKALB, DOUGLAS, GENTRY, GREENE, GRUNDY,
```

HARRISON, HENRY, HICKORY, HOLT, LAFAYETTE, JACKSON, JASPER, LACLEDE, LAWRENCE, LIVINGSTON, JOHNSON, MCDONALD, MERCER, NEWTON, NODAWAY, OZARK, PETTIS, PLATTE, POLK, RAY, SALINE, ST. CLAIR, STONE, TANEY, VERNON, WEBSTER, WORTH AND WRIGHT COUNTIES

	Rates	Fringes
Line Construction:		
Groundman Powderman	$ 38.44	1.5%+20.18
Groundman	$ 35.86	1.5%+25.34
Lineman Operator	$ 52.45	1.5%+19.34
Lineman	$ 58.15	1.5%+26.69

ELEC0095-001 06/01/2025

BARRY, BARTON, CEDAR, DADE, JASPER, LAWRENCE, MCDONALD, NEWTON, ST CLAIR, AND VERNON COUNTIES

	Rates	Fringes
Electricians:		
Cable Splicers	$ 25.40	12.19
Electricians	$ 32.25	20.81

ELEC0124-007 09/01/2025

BATES, BENTON, CARROLL, CASS, CLAY, COOPER, HENRY, JACKSON, JOHNSON, LAFAYETTE, MORGAN, PETTIS, PLATTE, RAY AND SALINE COUNTIES:

	Rates	Fringes
Electricians	$ 54.01	27.85

ELEC0257-003 03/01/2025

AUDRAIN (Except Cuivre Township), BOONE, CALLAWAY, CAMDEN, CHARITON, COLE, CRAWFORD, DENT, GASCONADE, HOWARD, MARIES, MILLER, MONITEAU, OSAGE, PHELPS AND RANDOLPH COUNTIES

	Rates	Fringes
Electricians:		
Cable Splicers	$ 30.42	16.085
Electricians	$ 40.50	23.26

ELEC0350-002 12/01/2024

ADAIR, AUDRAIN (East of Highway 19), CLARK, KNOX, LEWIS, LINN, MACON, MARION, MONROE, MONTGOMERY, PIKE, PUTNAM, RALLS, SCHUYLER, SCOTLAND, SHELBY AND SULLIVAN COUNTIES

	Rates	Fringes
Electricians	$ 37.60	22.145

ELEC0453-001 09/01/2024

	Rates	Fringes

```
Electricians:
     CHRISITAN, DALLAS,
     DOUGLAS, GREENE, HICKORY,
     HOWELL, LACLEDE, OREGON,
     OZARK, POLK, SHANNON,
     WEBSTER and WRIGHT COUNTIES.$ 32.40            19.11
     PULASKI and TEXAS COUNTIES..$ 39.70            19.84
     STONE and TANEY COUNTIES....$ 28.65            18.34
----------------------------------------------------------------
 ELEC0545-003 06/01/2025

ANDREW, BUCHANAN, CLINTON, DEKALB, ATCHISON, HOLT, MERCER,
GENTRY, HARRISON, DAVIESS, GRUNDY, WORTH, LIVINGSTON, NODAWAY,
AND CALDWELL COUNTIES


                                   Rates          Fringes

Electricians:....................$ 43.20            21.50
----------------------------------------------------------------
 ELEC0702-004 01/06/2025

BOLLINGER, BUTLER, CAPE GIRARDEAU, DUNKLIN, MADISON,
MISSISSIPPI, NEW MADRID, PEMISCOT, SCOTT, STODDARD AND WAYNE
COUNTIES


                                   Rates          Fringes

Line Construction:
     Groundman - Class A.........$ 38.18         29%+8.85
     Groundman-Equipment
     Operator Class II (all
     other equipment)............$ 46.49         29%+8.85
     Heavy-Equipment Operator
     Class I (all crawler type
     equipment D-4 and larger)...$ 52.13         29%+8.85
     Lineman.....................$ 74.55         29%+8.85
----------------------------------------------------------------
 ENGI0101-001 05/01/2025

AREA 1
ANDREW, ATCHISON, BATES, BENTON, BUCHANAN, CALDWELL, CARROLL,
CHARITON, CLINTON, COOPER, DAVIESS, DEKALB, GENTRY, GRUNDY,
HARRISON, HENRY, HOLT, HOWARD, JOHNSON, LAFAYETTE, LINN,
LIVINGSTON, MERCER, NODAWAY, PETTIS, SALINE, SULLIVAN AND WORTH
COUNITES


                                   Rates          Fringes

Power equipment operators:
     GROUP 1.....................$ 38.83            21.87
     GROUP 2.....................$ 38.43            21.87
     GROUP 3.....................$ 36.43            21.87

POWER EQUIPMENT OPERATORS CLASSIFICATIONS

  GROUP 1:  Asphalt roller operator, finish; asphalt paver and
  spreader; asphalt plant operator; auto grader or trimmer or
  sub-grader; backhoe; blade operator (all types); boilers -
  2; booster pump on dredge; bulldozer operator; boring
  machine (truck or crane mounted); clamshell operator;
  concrete mixer paver; concrete plant operator; concrete
  pump operator; crane operator; derrick or derrick trucks;
```

ditching machine; dragline operator; dredge engineman; dredge operator; drill cat with compressor mounted (self-contained) or similar type self- propelled rotary drill (not air tract); drilling or boring machine (rotary-self-propelled); finishing machine operator; greaser; high loader-fork lift-skid loader (all types); hoisting engineer (2 active drums); locomotive operator (standard guage); mechanics and welders (field and plants); mucking machine operator; pile drive operator; pitman crane or boom truck (all types); push cat; quad track; scraper operators (all types); shovel operator; sideboom cats; side discharge spreader; skimmer scoop operators; slip form paver operator (CMI, Rex, Gomeco or equal); la tourneau rooter (all tiller types); tow boat operator; truck crane; wood and log chippers (all types).

GROUP 2: A-frame truck operator; articulated dump truck; back filler operator; boilers (1); chip spreader; churn drill operator; compressor; concrete mixer operator, skip loader; concrete saws (self-propelled); conveyor operator; crusher operator; distributor operator; elevating grader operator; farm tractor (all attachments); fireman rig; float operator; form grade operator; hoisting engine (one drum); maintenance operator; multiple compactor; pavement breaker, self-propelled hydra-hammer (or similar type); paymill operator; power shield; pumps; roller operator (with or without blades); screening and washing plant; self-propelled street broom or sweeper; siphons and jets; straw blower; stump cutting machine; siphons and jets; tank car heater operator (combination boiler and booster); welding machine; vibrating machine operator (not hand held); welding machine.

GROUP 3: (a) Oiler;
(b) Oiiler driver
(c) Mechanic.

HOURLY PREMIUMS:

THE FOLLOWING CLASSIFICATIONS SHALL RECEIVE ($ .25) ABOVE GROUP 1 RATE: Dragline operator - 3 yds. & over; shovel 3 yds. & over; clamshell 3 yds. & over; Crane, rigs or piledrivers, 100' of boom or over (incl. jib.), hoist - each additional active drum over 2 drums

THE FOLLOWING CLASSIFICATIONS SHALL RECEIVE ($ .50) ABOVE GROUP 1 RATE: Tandem scoop operator; crane, rigs or piledrivers 150' to 200' of boom (incl. jib.)

THE FOLLOWING CLASSIFICATIONS SHALL RECEIVE ($ .75) ABOVE GROUP 1 RATE: Crane rigs, or piledrivers 200 ft. of boom or over (including jib.)

ENGI0101-005 04/01/2025

CASS, CLAY, JACKSON,PLATTE AND RAY COUNTIES

	Rates	Fringes
Power equipment operators:		
GROUP 1	$ 40.17	22.29
GROUP 2	$ 39.13	22.29
GROUP 3	$ 34.66	22.29
GROUP 4	$ 38.01	22.29

POWER EQUIPMENT OPERATORS CLASSIFICATIONS

GROUP 1: Asphalt roller operator, finish; asphalt paver and spreader; asphalt plant operator; auto grader or trimmer or sub-grader; backhoe; blade operator (all types); boilers-2; booster pump on dredge; boring machine (truck or crane mounted); bulldozer operator; clamshell operator; concrete cleaning decontamination machine operator; concrete mixer paver; concrete plant operator; concrete pump operator; crane operator; derrick or derrick trucks; ditching machine; dragline operator; dredge engineman; dredge operator; drillcat with compressor mounted (self-contained) or similar type self propelled rotary drill (not air tract); drilling or boring machine (rotary - self-propelled); finishing machine operator; greaser; heavy equipment robotics operator/mechanic; horizontal directional drill operator; horizontal directional drill locator; loader-forklift - skid loader (all types); hoisting engineer (2 active drums); locomotive operator (standard guage); master environmental maintenance mechanic; mechanics and welders (field and plants); mucking machine operator; piledrive operator; pitman crane or boom truck (all types); push cat; quad-track; scraper operators (all types); shovel operator; side discharge spreader; sideboom cats; skimmer scoop operator; slip-form paver (CMI, REX, Gomaco or equal); la tourneau rooter (all tiller types); tow boat operator; truck crane; ultra high perssure waterjet cutting tool system operator/mechanic; vacuum blasting machine operator/mechanic; wood and log chippers (all types)

GROUP 2: ""A"" Frame truck operator; back filler operator; boilers (1); chip spreader;churn drill operator; concrete mixer operator, skip loader; concrete saws (self-propelled); conveyor operator; crusher operator; distributor operator; elevating grader operator; farm tractor (all attachments); fireman rig; float operator; form grader operator; hoisting engine (1 drum); maintenance operator; multiple compactor; pavement breaker, self-propelled hydra- hammer (or similar type); power shield; paymill operator; pumps; siphons and jets; stump cutting machine; tank car heater operator (combination boiler and booster); compressor; roller operator (with or without blades); screening and washing plant; self-propelled street broom or sweeper; straw blower; tank car heater operator (combination boiler and booster); vibrating machine operator (not hand held)

GROUP 3: Oilers

GROUP 4: Oiler Driver (All Types)

FOOTNOTE:
HOURLY PREMIUMS FOLLOWING CLASSIFICATIONS SHALL RECEIVE ($1.00) ABOVE GROUP 1 RATE:
Clamshells - 3 yd. capacity or over; Cranes or rigs, 80 ft. of boom or over (including jib); Draglines, 3 yd. capacity or over;
Piledrivers 80 ft. of boom or over (including jib);
Shovels & backhoes, 3 yd. capacity or over.

ENGI0101-022 05/01/2025

BARRY, BARTON, CAMDEN, CEDAR, CHRISTIAN, DADE, DALLAS, DOUGLAS,

GREENE, HICKORY, JASPER, LACLEDE, LAWRENCE, MCDONALD, NEWTON, OZARK, POLK, ST. CLAIR, STONE, TANEY, VERNON, WEBSTER AND WRIGHT COUNTIES and CITY OF SPRINGFIELD

	Rates	Fringes
Power equipment operators:		
GROUP 1	$ 36.60	19.32
GROUP 2	$ 36.25	19.32
GROUP 3	$ 36.05	19.32
GROUP 4	$ 34.00	19.32

POWER EQUIPMENT OPERATORS CLASSIFICATIONS

GROUP 1: Asphalt finishing machine & trench widening spreader; asphalt plant console operator; autograder; automatic slipform paver; backhoe; blade operator - all types; boat operator - tow; boilers-2; central mix concrete plant operator; clamshell operator; concrete mixer paver; crane operator; derrick or derrick trucks; ditching machine; dozer operator; dragline operator; dredge booster pump; dredge engineman; dredge operator; drill cat with compressor mounted on cat; drilling or boring machine rotary self-propelled; highloader; hoisting engine - 2 active drums; launch hammer wheel; locomotive operator; - standard guage; mechanic and welders; mucking machine; off-road trucks; piledriver operator; pitman crane operator; push cat operator; quad trac; scoop operator - all types; shovel operator; sideboom cats; skimmer scoop operators; trenching machine operator; truck crane.

GROUP 2: A-frame; asphalt hot-mix silo; asphalt plant fireman (drum or boiler); asphalt plant man; asphalt plant man; asphalt plant mixer operator; asphalt roller operator; backfiller operator; barber-greene loader; boat operator (bridges and dams); chip spreader; concrete mixer operator - skip loader; concrete plant operator; concrete pump operator; crusher operator; dredge oiler; elevating grader operator; fork lift; greaser-fleet; hoisting engine - 1; locomotive operator - narrow gauge; multiple compactor; pavement breaker; powerbroom - self-propelled; power shield; rooter; side discharge concrete spreader; slip form finishing machine; stumpcutter machine; throttle man; tractor operator (over 50 h.p.); winch truck.

GROUP 3: Boilers - 1; chip spreader (front man); churn drill operator; clef plane operator; concrete saw operator (self-propelled); curb finishing machine; distributor operator; finishing machine operator; flex plane operator; float operator; form grader operator; pugmill operator; roller operator, other than high type asphalt; screening & washing plant operator; siphons & jets; sub-grading machine operator; spreader box operator, self-propelled (not asphalt); tank car heater operator (combination boiler & booster); tractor operator (50 h.p. or less); Ulmac, Ulric or similar spreader; vibrating machine operator, not hand;

GROUP 4: Grade checker; Oiler; Oiler-Driver

HOURLY PREMIUMS:

The following classifications shall receive $ .25 above GROUP 1 rate:
Clamshells - 3 yds. or over; Cranes - Rigs or Piledrivers,

100 ft. of boom or over (including jib);
Draglines - 3 yds. or over; Hoists - each additional active drum over 2 drums; Shovels - 3 yds. or over;

The following classifications shall receive $ .50 above GROUP 1 rate:
Tandem scoop operator; Cranes - Rigs or Piledrivers, 150 ft. to 200 ft. of boom (including jib); Tandem scoop.

The following classifications shall receive $ .75 above GROUP 1 rate:
Cranes - Rigs or Piledrivers, 200 ft. of boom or over (including jib.).

ENGI0513-004 05/05/2025

FRANKLIN, JEFFERSON, LINCOLN, ST CHARLES, AND WARREN COUNTIES

	Rates	Fringes
Power equipment operators:		
GROUP 1	$ 45.96	30.96
GROUP 2	$ 45.96	30.96
GROUP 3	$ 44.66	30.96
GROUP 4	$ 44.22	30.96

POWER EQUIPMENT OPERATORS CLASSIFICATIONS

GROUP 1: Backhoe, Cable; Backhoe, Hydraulic (2 cu yds bucket and under regardless of attachment, one oiler for 2 or 3, two oilers for 4 through 6); Backhoe, Hydraulic over 2 cu yds; Cableway; Crane, Crawler or Truck; Crane, Hydraulic - Truck or Cruiser mounted, 16 tons and over; Crane, Locomotive; crane with boom including jib over 100 ft from pin to pin; Crane using rock socket tool; Derrick, Steam; Derrick Car and Derrick Boat; Dragline, 7 cu yds and over; Dredge; Gradall, Crawler or tire mounted; Locomotive, Gas, Steam & other powers; Pile Driver, Land or Floating; Scoop, Skimmer; Shovel, Power (Electric, Gas, Steam or other powers); Shovel, Power (7 cu yds and over); Switch Boat; Whirley; Air Tugger with air compressor; Anchor Placing Barge; Asphalt Spreaker; Athey Force Feeder Loader, self-propelled; Backfilling Machine; Boat Operator - Push Boat or Tow Boat (job site); Boiler, High Pressure Breaking in Period; Boom Truck, Placing or Erecting; Boring Machine, Footing Foundation; Bullfloat; Cherry Picker; Combination Concrete Hoist and Mixer (such as Mixermobile); Compressor, Two 125 CFM and under; Compressor, Two through Four over 125 CFM; Compressor when operator runs throttle; Concrete Breaker (Truck or Tractor mounted); Concrete Pump (such as Pumpcrete machine); Concrete Saw (self-propelled); Concrete Spreader; Conveyor, Large (not selfpropelled) hoisting or moving brick and concrete into, or into and on floor level, one or both; Crane, Cimbing (such as Linden); Crane, Hydraulic - Rough Terrain, self-propelled; Crane, Hydraulic - Truck or Cruiser mounted - under 16 tons; Drilling machine - Self-powered, used for earth or rock drilling or boring (wagon drills and any hand drills obtaining power from other souces including concrete breakers, jackhammers and Barco equipmnet no engineer required); Elevating Grader; Engine Man, Dredge; Excavator or Powerbelt Machine; Finishing Machine, self- propelled oscillating screed; Forklift; Generators, Two through Six 30 KW or over; Grader, Road with power blade; Greaser; Highlift; Hoist,

Concrete and Brick (Brick cages or concrete skips operating or on tower, Towermobile, or similar equipment); Hoist, Three or more drums in use; Hoist, Stack; Hydro-Hammer; Lad-A-Vator, hoisting brick or concrete; Loading Machine such as Barber-Greene; Mechanic on job site

GROUP 2: Air Tugger with plant air; Boiler (for power or heating shell of building or temporary enclosures in connection with construction work); Boiler, Temporary; Compressor, One over 125 CFM; Compressor, truck mounted; Conveyor, Large (not self- propelled); Conveyor, Large (not self- propelled) moving brick and concrete (distributing) on floor level; Curb Finishing Machine; Ditch Paving Machine; Elevator (outside); Endless Chain Hoist; Fireman (as required); Form Grader; Hoist, One Drum regardless of size (except brick or concrete); Lad-A-Vator, other hoisting; Manlift; Mixer, Asphalt, over 8 cu ft capacity; Mixer, one bag capacity or less; Mixer, without side loader, two bag capacity or more; Mixer, with side loader, regardless of size, not Paver; Mud Jack (where mud jack is used in conjenction with an air compressor, operator shall be paid $ .55 per hour in addition to his basic hourly rate for covering both operations); Pug Mill operator; Pump, Sump - self powered, automatic controlled over 2""; Scissor Lift (used for hoisting); Skid Steer Loader; Sweeper, Street; Tractor, small wheel type 50 HP and under with grader blade and similar equipment; Welding Machine, One over 400 amp; Winch, operating from truck

GROUP 3: Boat operator - outboard motor, job site; Conveyors (such as Con-Vay-It) regardless of how used; Elevator (inside); Heater operator, 2 through 6; Sweeper, Floor

GROUP 4: Crane type

HOURLY PREMIUMS:

Backhoe, Hydraulic 2 cu yds or less without oiler - $2.00;
Crane,climbing (such as Linden) - $.50;
Crane, Pile Driving and Extracting - $ .50
Crane with boom (including job) over
100 ft from pin to pin - add $.01 per foot
to maximum of $4.00);
Crane, using rock socket tool - $ .50;
Derrick, diesel, gas or electric hoisting material
and erecting steel (150 ft or more above ground) - $ .50;
Dragline, 7 cu yds and over - $ .50;
Hoist, Three or more drums in use - $ .50;
Scoop, Tandem - $.50;
Shovel, Power - 7 cu yds and over - $ .50;
Tractor, Tandem Crawler - $ .50;
Tunnel, man assigned to work in tunnel or
tunnel shaft - $ .50;
Wrecking, when machines are working on
second floor or higher - $ .50

ENGI0513-006 05/01/2025

ADAIR, AUDRAIN, BOLLINGER, BOONE, BUTLER, CALLAWAY, CAPE GIRARDEAU, CARTER, CLARK, COLE, CRAWFORD, DENT, DUNKLIN, GASCONADE, HOWELL, IRON, KNOX, LEWIS, MACON, MADISON, MARIES, MARION, MILLER, MISSISSIPPI, MONITEAU, MONROE, MONTGOMERY, MORGAN, NEW MADRID, OREGON, OSAGE, PEMISCOT, PERRY, PHELPS, PIKE, PULASKI, PUTNAM, RALLS, RANDOLPH, REYNOLDS, RIPLEY, ST.

FRANCOIS, STE. GENEVIEVE, SCHUYLER, SCOTLAND, SCOTT, SHANNON, SHELBY, STODDARD, TEXAS, WASHINGTON, AND WAYNE COUNTIES

	Rates	Fringes
Power equipment operators:		
GROUP 1	$ 40.39	30.33
GROUP 2	$ 40.04	30.33
GROUP 3	$ 39.84	30.33
GROUP 4	$ 36.19	30.33

POWER EQUIPMENT OPERATORS CLASSIFICATIONS

GROUP 1: Asphalt finishing machine & trench widening spreader, asphalt plant console operator; autograder; automatic slipform paver; back hoe; blade operator - all types; boat operator tow; boiler two; central mix concrete plant operator; clam shell operator; concrete mixer paver; crane operator; derrick or derrick trucks; ditching machine; dozer operator; dragline operator; dredge booster pump; dredge engineman; dredge operator; drill cat with compressor mounted on cat; drilling or boring machine rotary self-propelled; highloader; hoisting engine 2 active drums; launchhammer wheel; locomotive operator standrad guage; mechanics and welders; mucking machine; piledriver operator; pitman crane operator; push cat operator; guad-trac; scoop operator; sideboom cats; skimmer scoop operator; trenching machine operator; truck crane, shovel operator.

GROUP 2: A-Frame; asphalt hot-mix silo; asphalt roller operator asphalt plant fireman (drum or boiler); asphalt plant man; asphalt plant mixer operator; backfiller operator; barber-greene loader; boat operator (bridge & dams); chip spreader; concrete mixer operator skip loader; concrete plant operator; concrete pump operator; dredge oiler; elevating graded operator; fork lift; grease fleet; hoisting engine one; locomotive operator narrow guage; multiple compactor; pavement breaker; powerbroom self-propelled; power shield; rooter; slip-form finishing machine; stumpcutter machine; side discharge concrete spreader; throttleman; tractor operator (over 50 hp); winch truck; asphalt roller operator; crusher operator.

GROUP 3: Spreader box operator, self-propelled not asphalt; tractor operator (50 h.p. or less); boilers one; chip spreader (front man); churn drill operator; compressor over 105 CFM 2-3 pumps 4"" & over; 2-3 light plant 7.5 KWA or any combination thereof; clef plane operator; compressor maintenance operator 2 or 3; concrete saw operator (self-propelled); curb finishing mancine; distributor operator; finishing machine operator; flex plane operator; float operator; form grader operator; pugmill operator; riller operator other than high type asphalt; screening & washing plant operator; siphons & jets; subgrading machine operator; tank car heater (combination boiler & booster); ulmac, ulric or similar spreader; vibrating machine operator; hydrobroom.

GROUP 4: Oiler; grout machine; oiler driver; compressor over 105 CFM one; conveyor operator one; maintenance operator; pump 4"" & over one.

FOOTNOTE: HOURLY PREMIUMS

Backhoe hydraulic, 2 cu. yds. or under Without oiler - $2.00
Certified Crane Operator - $1.50;
Certified Hazardous Material Operator $1.50;
Crane, climbing (such as Linden) - $0.50;
Crane, pile driving and extracting - $0.50;
Crane, with boom (including jib) over 100' from pin to pin add $0.01 per foot to maximum of $4.00;
Crane, using rock socket tool - $0.50;
Derrick, diesel, gas or electric, hoisting material and erecting steel (150' or more above the ground) - $0.50;
Dragline, 7 cu. yds, and over - $0.50;
Hoist, three or more drums in use - $0.50; Scoop, Tandem - $0.50;
Shovel, power - 7 cu. yds. or more - $0.50;
Tractor, tandem crawler - $0.50;
Tunnel, man assigned to work in tunnel or tunnel shaft - $0.50;
Wrecking, when machine is working on second floor or higher - $0.50;

ENGI0513-007 05/05/2025

ST. LOUIS CITY AND COUNTY

	Rates	Fringes
Power equipment operators:		
GROUP 1	$ 45.96	30.96
GROUP 2	$ 45.96	30.96
GROUP 3	$ 44.66	30.96
GROUP 4	$ 44.22	30.96

POWER EQUIPMENT OPERATORS CLASSIFICATIONS

GROUP 1: Backhoe, cable or hydraulic; cableway; crane crawler or truck; crane, hydraulic-truck or cruiser mounted 16 tons & over; crane locomotive; derrick, steam; derrick car & derrick boat; dragline; dredge; gradall, crawler or tire mounted; locomotive, gas, steam & other powers; pile driver, land or floating; scoop, skimmer; shovel, power (steam, gas, electric or other powers); switch boat; whirley.

GROUP 2: Air tugger w/air compressor; anchor-placing barge; asphalt spreader; athey force feeder loader (self-propelled); backfilling machine; backhoe-loader; boat operator-push boat or tow boat (job site); boiler, high pressure breaking in period; boom truck, placing or erecting; boring machine, footing foundation; bull- float; cherry picker; combination concrete hoist & mixer (such as mixer mobile); compressor (when operator runs throttle); concrete breaker (truck or tractor mounted); concrete pump, such as pump-crete machine; concrete saw (self-propelled), concrete spreader; conveyor, large (not self-propelled), hoisting or moving brick and concrete into, or into and on floor level, one or both; crane, hydraulic-rough terrain, self-propelled; crane hydraulic-truck or cruiser mounted-under 16 tons; drilling machines, self-powered use for earth or rock drilling or boring (wagon drills nd any hand drills obtaining power from other sources including concrete breakers, jackhammers and barco equipment-no engineer required); elevating grader; engineman, dredge; excavator or powerbelt machine; finishing machine,

self-propelled oscillating screed; forklift; grader, road with power blade; highlift. greaser; hoist, stack, hydro-hammer; loading machine (such as barber-greene); machanic, on job site; mixer, pipe wrapping machines; plant asphalt; plant, concrete producing or ready-mix job site; plant heating-job site; plant mixing-job site; plant power, generating-job site; pumps, two through six self-powered over 2""; pumps, electric submersible, two through six, over 4""; quad-track; roller, asphalt, top or sub-grade; scoop, tractor drawn; spreader box; sub-grader; tie tamper; tractor-crawler, or wheel type with or without power unit, power take-offs and attachments regardless of size; trenching machine; tunnel boring machine; vibrating machine automatic, automatic propelled; welding machines (gasoline or diesel) two through six; well drilling machine

GROUP 3: Conveyor, large (not self-propelled); conveyor, large (not self-propelled) moving brick and concrete distributing) on floor level; mixer two or more mixers of one bag capacity or less; air tugger w/plant air; boiler, for power or heating on construction projects; boiler, temporary; compressor (mounted on truck; curb finishing machine; ditch paving machine; elevator; endless chain hoist; form grader; hoist, one drum regardless of size; lad-a-vator; manlift; mixer, asphalt, over 8 cu. ft. capacity, without side loader, 2 bag capacity or more; mixer, with side loader, regardless of size; pug mill operator; pump, sump-self-powered, automatic controlled over 2"" during use in connection with construction work; sweeper, street; welding machine, one over 400 amp.; winch operating from truck; scissor lift (used for hoisting); tractor, small wheel type 50 h.p. & under with grader blade & similar equipment; Oiler on dredge and on truck crane.

GROUP 4: Boat operator-outboard motor (job site); conveyor (such as con-vay-it) regardless of how used; sweeper, floor

HOURLY PREMIUMS:

Backhoe, hydraulic 2 cu. yds. or under without oiler	$2.00
Certified Crane Operator	1.50
Certified Hazardous Material Operator	1.50
Crane, climbing (such as Linden)	.50
Crane, pile driving and extracting	.50
Crane, with boom (including jib) over 100' (from pin to pin) add $.01 per foot to maximum of	4.00
Crane, using rock socket tool	.50
Derrick, diesel, gas or electric, hoisting material and erecting steel (150' or more above ground)	.50
Dragline, 7 cu. yds. and over	.50
Hoist, three (3) or more drums in use	.50
Scoop, Tandem	.50
Shovel, power - 7 cu. yds. or more	.50
Tractor, tandem crawler	.50
Tunnel, man assigned to work in tunnel or tunnel shaft	.50
Wrecking, when machine is working on second floor or higher	.50

IRON0010-012 04/01/2025

	Rates	Fringes

```
Ironworkers:
     ANDREW, BARTON, BENTON,
     CAMDEN, CEDAR,  CHARITON,
     CHRISTIAN, COOPER, DADE,
     DALLAS, DAVIESS, DE KALB,
     GENTRY, GREENE, GRUNDY,
     HARRISON, HICKORY, HOLT,
     HOWARD, LACLEDE, LINN,
     LIVINGSTON, MERCER,
     MONITEAU, MORGAN, NODAWAY,
     PETTIS, POLK, PUTNAM,
     RANDLOPH, ST. CLAIR,
     SULLIVAN, TANEY, VERNON,
     WEBSTER, WRIGHT and WORTH
     Counties and portions of
     ADAIR, BOONE, MACON,
     MILLER and RANDOLPH
     Counties...................$ 36.00            34.25
     ATCHISON, BATES, BUCHANAN,
     CALDWELL, CARROLL, CASS,
     CLAY, CLINTON, HENRY,
     JACKSON, JOHNSON,
     LAFAYETTE, PETTIS, PLATTE,
     SALINE, AND RAY COUNTIES....$ 39.00            34.25
-----------------------------------------------------------------
 IRON0010-020 04/01/2025

BARRY, JASPER, LAWRENCE, MCDONALD, NEWTON AND STONE Counties

                                  Rates          Fringes

Ironworkers:.....................$ 36.00            34.25
-----------------------------------------------------------------
 IRON0321-002 08/01/2023

DOUGLAS, HOWELL and OZARK COUNTIES

                                  Rates          Fringes

Ironworker.......................$ 27.00            20.96
-----------------------------------------------------------------
 IRON0396-004 08/06/2025

ST. LOUIS (City and County), ST. CHARLES, JEFFERSON, IRON,
FRANKLIN, LINCOLN, WARREN, WASHINGTON, ST. FRANCOIS, STE.
GENEVIEVE, and REYNOLDS Counties; and portions of MADISON,
PERRY, BOLLINGER, WAYNE, and CARTER Counties


                                  Rates          Fringes

Ironworker.......................$ 44.27            31.65
-----------------------------------------------------------------
 IRON0396-009 08/07/2024

AUDRAIN, CALLAWAY, COLE, CRAWFORD, DENT, GASCONADE, MARIES,
MONTGOMERY, OSAGE, PHELPS, PIKE, PULASKI, TEXAS and WRIGHT
Counties; and portions of BOONE, CAMDEN, DOUGLAS, HOWELL,
LACLEDE, MILLER, MONROE, OREGON, SHANNON and RALLS Counties


                                  Rates          Fringes

Ironworker.......................$ 41.67            31.25
```

---

* IRON0577-005 06/01/2025

ADAIR, CLARK, KNOX, LEWIS, MACON, MARION, MONROE, RALLS,
SCHUYLER, SCOTLAND, AND SHELBY COUNTIES

	Rates	Fringes
Ironworker	$ 36.30	25.80

IRON0782-003 08/01/2023

CAPE GIRARDEAU, MISSISSIPPI, NEW MADRID, SCOTT, & STODDARD
Counties; and portions of BOLLINGER, BUTLER, CARTER, DUNKLIN,
MADISON, PEMISCOT, PERRY, RIPLEY, and WAYNE Counties

	Rates	Fringes
Ironworkers:		
Locks, Dams, Bridges and other major work on the Mississippi and Ohio River only	$ 38.77	29.51
All Other Work	$ 33.47	24.12

LABO0042-003 06/04/2025

ST. LOUIS (City and County)

	Rates	Fringes
LABORER		
Plumber Laborer	$ 40.82	17.56

LABO0042-005 06/04/2025

ST. LOUIS (City and County)

	Rates	Fringes
LABORER		
Dynamiter, Powderman	$ 40.82	17.56
Laborers, Flaggers	$ 40.82	17.56
Wrecking	$ 40.82	17.56

LABO0110-005 05/01/2025

Jefferson and Washington Counties

	Rates	Fringes
LABORER (Jefferson County)		
GROUP 1	$ 40.36	15.96
GROUP 2	$ 40.36	15.96
LABORER (Washington County)		
GROUP 1	$ 37.25	15.96
GROUP 2	$ 37.25	15.96

LABORERS CLASSIFICATIONS

GROUP 1 - General laborer-flagman, carpenter tenders; salamander Tenders; Dump Man; Ticket Takers; loading trucks under bins, hoppers, and conveyors; track man; cement

handler; dump man on earth fill; georgie buggie man; material batch hopper man; spreader on asphalt machine; material mixer man (except on manholes); coffer dams; riprap pavers rock, block or brick; scaffolds over ten feet not self-supported from ground up; skip man on concrete paving; wire mesh setters on concrete paving; all work in connection with sewer, water, gas, gasoling, oil, drainage pipe, conduit pipe, tile and duct lines and all other pipe lines; power tool operator; all work in connection with hydraulic or general dredging operations; form setters, puddlers (paving only); straw blower nozzleman; asphalt plant platform man; chuck tender; crusher feeder; men handling creosote ties or creosote materials; men working with and handling epoxy material; topper of standing trees; feeder man on wood pulverizers, board and willow mat weavers and cabelee tiers on river work; deck hands; pile dike and revetment work; all laborers working on underground tunnels less than 25 ft. where compressed air is not used; abutement and pier hole men working six (6) ft. or more below ground; men working in coffer dams for bridge piers and footing in the river; barco tamper; jackson or any other similar tamp; cutting torch man; liners, curb, gutters, ditch lines; hot mastic kettlemen; hot tar applicator; hand blade operator; mortar men or brick or block manholes; rubbing concrete, air tool operator under 65 lbs.; caulker and lead man; chain or concrete saw under 15 h.p.; signal Gan; Guard rail and sign erectors.

GROUP 2 - Skilled laborers - Vibrator man; asphalt raker; head pipe layer on sewer work; batterboard man on pipe and ditch work; cliff scalers working from bosun's chairs; scaffolds or platforms on dams or power plants over 10 ft. high; air tool operator over 65 lbs.; stringline man on concrete paving; sandblast man; laser beam man; wagon drill; churn drill; air track drill and all other similar type drills, gunite nozzle man; pressure grout man; screed man on asphalt; concrete saw 15 h.p. and over; grade checker; strigline man on electronic grade control; manhole builder; dynamite man; powder man; welder; tunnel man; waterblaster - 1000 psi or over; asbestos and/or hazardous waste removal and/or disposal

---

LABO0579-005 05/01/2023

	Rates	Fringes
LABORER (ANDREW, ATCHISON, BUCHANAN, CALDWELL, CLINTON, DAVIESS, DEKALB, GENTRY, GRUNDY, HARRISON, HOLT, LIVINGSTON, MERCER, NODAWAY and WORTH COUNTIES.)		
GROUP 1	$ 29.04	16.59
GROUP 2	$ 29.39	16.59
LABORER (BARRY, BARTON, BATES, BENTON, CAMDEN, CARROLL, CEDAR, CHRISTIAN, DADE, DALLAS, DOUGLAS, GREENE, HENRY. HICKORY, JASPER, JOHNSON, LACLEDE, LAWRENCE, MCDONALD, MORGAN, NEWTON, OZARK, PETTIS, POLK, ST.CLAIR, SALINE, STONE,		

TANEY, VERNON, WEBSTER and
WRIGHT COUNTIES)

GROUP 1	$ 28.23	15.60
GROUP 2	$ 28.78	15.60

LABORER (LAFAYETTE COUNTY)

GROUP 1	$ 29.78	15.85
GROUP 2	$ 30.13	15.85

LABORERS CLASSIFICATIONS

GROUP 1: General Laborers - Carpenter tenders; salamander tenders; loading trucks under bins; hoppers & conveyors; track men & all other general laborers; air tool operator; cement handler-bulk or sack; dump man on earth fill; georgie buggie man; material batch hopper man; material mixer man (except on manholes); coffer dams; riprap pavers - rock, block or brick; signal man; scaffolds over ten feet not self-supported from ground up; skipman on concrete paving; wire mesh setters on concrete paving; all work in connection with sewer, water, gas, gasoline, oil drainage pipe, conduit pipe, tile and duct lines and all other pipe lines; power tool operator, all work in connection with hydraulic or general dredging operations; puddlers (paving only); straw blower nozzleman; asphalt plant platform man; chuck tender; crusher feeder; men handling creosote ties or creosote materials; men working with and handling epoxy material or materials (where special protection is required); rubbing concrete; topper of standing trees; batter board man on pipe and ditch work; feeder man on wood pulverizers; board and willow mat weavers and cable tiers on river work; deck hands; pile dike and revetment work; all laborers working on underground tunnels less than 25 feet where compressed air is not used; abutment and pier hole men working six (6) feet or more below ground; men working in coffer dams for bridge piers and footings in the river; ditchliners; pressure groutmen; caulker; chain or concrete saw; cliffscalers working from scaffolds, bosuns' chairs or platforms on dams or power plants over (10) feet above ground; mortarmen on brick or block manholes; toxic and hazardous waste work.

GROUP 2: Skilled Laborers - Head pipe layer on sewer work; laser beam man; Jackson or any other similar tamp; cutting torch man; form setters; liners and stringline men on concrete paving, curb, gutters; hot mastic kettleman; hot tar applicator; sandblasting and gunite nozzlemen; air tool operator in tunnels; screed man on asphalt machine; asphalt raker; barco tamper; churn drills; air track drills and all similar drills; vibrator man; stringline man for electronic grade control; manhole builders-brick or block; dynamite and powder men; grade checker.

LABO0660-004 05/01/2025

Clark, Knox, Lewis, Marion, Pike, Ralls, Scotland, Shelby
Counties

	Rates	Fringes
LABORER		
GROUP 1	$ 37.25	15.96
GROUP 2	$ 37.25	15.96

LABORERS CLASSIFICATIONS

GROUP 1 - General laborer-flagman, carpenter tenders; salamander Tenders; Dump Man; Ticket Takers; loading trucks under bins, hoppers, and conveyors; track man; cement handler; dump man on earth fill; georgie buggie man; material batch hopper man; spreader on asphalt machine; material mixer man (except on manholes); coffer dams; riprap pavers rock, block or brick; scaffolds over ten feet not self-supported from ground up; skip man on concrete paving; wire mesh setters on concrete paving; all work in connection with sewer, water, gas, gasoling, oil, drainage pipe, conduit pipe, tile and duct lines and all other pipe lines; power tool operator; all work in connection with hydraulic or general dredging operations; form setters, puddlers (paving only); straw blower nozzleman; asphalt plant platform man; chuck tender; crusher feeder; men handling creosote ties or creosote materials; men working with and handling epoxy material; topper of standing trees; feeder man on wood pulverizers, board and willow mat weavers and cabelee tiers on river work; deck hands; pile dike and revetment work; all laborers working on underground tunnels less than 25 ft. where compressed air is not used; abutement and pier hole men working six (6) ft. or more below ground; men working in coffer dams for bridge piers and footing in the river; barco tamper; jackson or any other similar tamp; cutting torch man; liners, curb, gutters, ditch lines; hot mastic kettlemen; hot tar applicator; hand blade operator; mortar men or brick or block manholes; rubbing concrete, air tool operator under 65 lbs.; caulker and lead man; chain or concrete saw under 15 h.p.; signal Gan; Guard rail and sign erectors.

GROUP 2 - Skilled laborers - Vibrator man; asphalt raker; head pipe layer on sewer work; batterboard man on pipe and ditch work; cliff scalers working from bosun's chairs; scaffolds or platforms on dams or power plants over 10 ft. high; air tool operator over 65 lbs.; stringline man on concrete paving; sandblast man; laser beam man; wagon drill; churn drill; air track drill and all other similar type drills, gunite nozzle man; pressure grout man; screed man on asphalt; concrete saw 15 h.p. and over; grade checker; strigline man on electronic grade control; manhole builder; dynamite man; powder man; welder; tunnel man; waterblaster - 1000 psi or over; asbestos and/or hazardous waste removal and/or disposal

---

LABO0660-006 06/02/2025

Lincoln, Montgomery, St Charles and Warren Counties

	Rates	Fringes
LABORER (Common or General).....	$ 36.91	15.62
Lincoln, Monntomery, and Warrner Counties.....	$ 39.76	15.96
St. Charles County.....	$ 41.18	15.96

LABO0662-001 05/01/2025

Callaway, Cole, Miller and Moniteau Counties

	Rates	Fringes

LABORER
GROUP 1.....$ 37.25 15.96
GROUP 2.....$ 37.25 15.96

LABORERS CLASSIFICATIONS

GROUP 1 - General laborer-flagman, carpenter tenders; salamander Tenders; Dump Man; Ticket Takers; loading trucks under bins, hoppers, and conveyors; track man; cement handler; dump man on earth fill; georgie buggie man; material batch hopper man; spreader on asphalt machine; material mixer man (except on manholes); coffer dams; riprap pavers rock, block or brick; scaffolds over ten feet not self-supported from ground up; skip man on concrete paving; wire mesh setters on concrete paving; all work in connection with sewer, water, gas, gasoling, oil, drainage pipe, conduit pipe, tile and duct lines and all other pipe lines; power tool operator; all work in connection with hydraulic or general dredging operations; form setters, puddlers (paving only); straw blower nozzleman; asphalt plant platform man; chuck tender; crusher feeder; men handling creosote ties or creosote materials; men working with and handling epoxy material; topper of standing trees; feeder man on wood pulverizers, board and willow mat weavers and cabelee tiers on river work; deck hands; pile dike and revetment work; all laborers working on underground tunnels less than 25 ft. where compressed air is not used; abutement and pier hole men working six (6) ft. or more below ground; men working in coffer dams for bridge piers and footing in the river; barco tamper; jackson or any other similar tamp; cutting torch man; liners, curb, gutters, ditch lines; hot mastic kettlemen; hot tar applicator; hand blade operator; mortar men or brick or block manholes; rubbing concrete, air tool operator under 65 lbs.; caulker and lead man; chain or concrete saw under 15 h.p.; signal Gan; Guard rail and sign erectors.

GROUP 2 - Skilled laborers - Vibrator man; asphalt raker; head pipe layer on sewer work; batterboard man on pipe and ditch work; cliff scalers working from bosun's chairs; scaffolds or platforms on dams or power plants over 10 ft. high; air tool operator over 65 lbs.; stringline man on concrete paving; sandblast man; laser beam man; wagon drill; churn drill; air track drill and all other similar type drills, gunite nozzle man; pressure grout man; screed man on asphalt; concrete saw 15 h.p. and over; grade checker; strigline man on electronic grade control; manhole builder; dynamite man; powder man; welder; tunnel man; waterblaster - 1000 psi or over; asbestos and/or hazardous waste removal and/or disposal

---

LABO0663-002 04/01/2025

CASS, CLAY, JACKSON, PLATTE AND RAY COUNTIES

	Rates	Fringes
LABORER		
GROUP 1	$ 36.24	15.87
GROUP 2	$ 37.45	15.87

LABORERS CLASSIFICATIONS

GROUP 1: General laborers, Carpenter tenders, salamander tenders, loading trucks under bins, hoppers and conveyors, track men and all other general laborers, air tool operator, cement handler (bulk or sack), chain or concrete saw, deck hands, dump man on earth fill, Georgie Buggies man, material batch hopper man, scale man, material mixer man (except on manholes), coffer dams, abutments and pier hole men working below ground, riprap pavers rock, black or brick, signal man, scaffolds over ten feet not self-supported from ground up, skipman on concrete paving, wire mesh setters on concrete paving, all work in connection with sewer,water, gas, gasoling, oil, drainage pipe, conduit pipe, tile and duct lines and all other pipelines, power tool operator, all work in connection with hydraulic or general dredging operations, straw blower nozzleman,asphalt plant platform man, chuck tender, crusher feeder, men handling creosote ties on creosote materials, men working with and handling epoxy material or materials (where special protection is required), topper of standing trees, batter board man on pipe and ditch work, feeder man on wood pulverizers, board and willow mat weavers and cable tiers on river work, deck hands, pile dike and revetment work, all laborers working on underground tunnels less than 25 feet where compressed air is not used, abutment and pier hole men working six (6) feet or more below ground, men working in coffer dams for bridge piers and footings in the river, ditchliners, pressure groutmen, caulker and chain or concrete saw, cliffscalers working from scaffolds, bosuns' chairs or platforms on dams or power plants over (10) feet above ground, mortarmen on brick or block manholes, signal man.

GROUP 2: Skilled Laborer - spreader or screed man on asphalt machine, asphalt raker, grade checker, vibrator man, concrete saw over 5 hp., laser beam man, barco tamper, jackson or any other similar tamp, wagon driller, churn drills, air track drills and other similar drills, cutting torch man, form setters, liners and stringline men on concrete paving, curb, gutters and etc., hot mastic kettleman, hot tar applicator, hand blade operators, mortar men on brick or block manholes, sand blasting and gunnite nozzle men, rubbing concrete, air tool operator in tunnels, head pipe layer on sewer work, manhole builder (brick or block), dynamite and powder men.

LABO0840-011 05/01/2025

Crawford, Dent, Franklin, Gasconade, Howell, Maries, Oregon, Osage, Phelps, Pulaski, Shannon and Texas Counties

	Rates	Fringes
LABORER (Crawford, Dent, Gasconade, Howell, Maries, Oregon, Osage, Phelps, Pulaski, Shannon and Texas Counties)		
GROUP 1	$ 37.25	15.96
GROUP 2	$ 37.25	15.96
LABORER (Franklin County)		
GROUP 1	$ 40.31	15.96
GROUP 2	$ 40.31	15.96

LABORERS CLASSIFICATIONS

GROUP 1 - General laborer-flagman, carpenter tenders; salamander Tenders; Dump Man; Ticket Takers; loading trucks under bins, hoppers, and conveyors; track man; cement handler; dump man on earth fill; georgie buggie man; material batch hopper man; spreader on asphalt machine; material mixer man (except on manholes); coffer dams; riprap pavers rock, block or brick; scaffolds over ten feet not self-supported from ground up; skip man on concrete paving; wire mesh setters on concrete paving; all work in connection with sewer, water, gas, gasoling, oil, drainage pipe, conduit pipe, tile and duct lines and all other pipe lines; power tool operator; all work in connection with hydraulic or general dredging operations; form setters, puddlers (paving only); straw blower nozzleman; asphalt plant platform man; chuck tender; crusher feeder; men handling creosote ties or creosote materials; men working with and handling epoxy material; topper of standing trees; feeder man on wood pulverizers, board and willow mat weavers and cabelee tiers on river work; deck hands; pile dike and revetment work; all laborers working on underground tunnels less than 25 ft. where compressed air is not used; abutement and pier hole men working six (6) ft. or more below ground; men working in coffer dams for bridge piers and footing in the river; barco tamper; jackson or any other similar tamp; cutting torch man; liners, curb, gutters, ditch lines; hot mastic kettlemen; hot tar applicator; hand blade operator; mortar men or brick or block manholes; rubbing concrete, air tool operator under 65 lbs.; caulker and lead man; chain or concrete saw under 15 h.p.; signal Gan; Guard rail and sign erectors.

GROUP 2 - Skilled laborers - Vibrator man; asphalt raker; head pipe layer on sewer work; batterboard man on pipe and ditch work; cliff scalers working from bosun's chairs; scaffolds or platforms on dams or power plants over 10 ft. high; air tool operator over 65 lbs.; stringline man on concrete paving; sandblast man; laser beam man; wagon drill; churn drill; air track drill and all other similar type drills, gunite nozzle man; pressure grout man; screed man on asphalt; concrete saw 15 h.p. and over; grade checker; strigline man on electronic grade control; manhole builder; dynamite man; powder man; welder; tunnel man; waterblaster - 1000 psi or over; asbestos and/or hazardous waste removal and/or disposal

---

LABO0955-012 05/01/2025

Adair, Audrain, Boone, Chariton, Cooper, Howard, Linn, Macon, Monroe, Putnam, Randolph, Schuyler and Sullivan Counties

	Rates	Fringes
LABORER		
GROUP 1	$ 37.25	15.96
GROUP 2	$ 37.25	15.96

LABORERS CLASSIFICATIONS

GROUP 1 - General laborer-flagman, carpenter tenders;

salamander Tenders; Dump Man; Ticket Takers; loading trucks under bins, hoppers, and conveyors; track man; cement handler; dump man on earth fill; georgie buggie man; material batch hopper man; spreader on asphalt machine; material mixer man (except on manholes); coffer dams; riprap pavers rock, block or brick; scaffolds over ten feet not self-supported from ground up; skip man on concrete paving; wire mesh setters on concrete paving; all work in connection with sewer, water, gas, gasoling, oil, drainage pipe, conduit pipe, tile and duct lines and all other pipe lines; power tool operator; all work in connection with hydraulic or general dredging operations; form setters, puddlers (paving only); straw blower nozzleman; asphalt plant platform man; chuck tender; crusher feeder; men handling creosote ties or creosote materials; men working with and handling epoxy material; topper of standing trees; feeder man on wood pulverizers, board and willow mat weavers and cabelee tiers on river work; deck hands; pile dike and revetment work; all laborers working on underground tunnels less than 25 ft. where compressed air is not used; abutement and pier hole men working six (6) ft. or more below ground; men working in coffer dams for bridge piers and footing in the river; barco tamper; jackson or any other similar tamp; cutting torch man; liners, curb, gutters, ditch lines; hot mastic kettlemen; hot tar applicator; hand blade operator; mortar men or brick or block manholes; rubbing concrete, air tool operator under 65 lbs.; caulker and lead man; chain or concrete saw under 15 h.p.; signal Gan; Guard rail and sign erectors.

GROUP 2 - Skilled laborers - Vibrator man; asphalt raker; head pipe layer on sewer work; batterboard man on pipe and ditch work; cliff scalers working from bosun's chairs; scaffolds or platforms on dams or power plants over 10 ft. high; air tool operator over 65 lbs.; stringline man on concrete paving; sandblast man; laser beam man; wagon drill; churn drill; air track drill and all other similar type drills, gunite nozzle man; pressure grout man; screed man on asphalt; concrete saw 15 h.p. and over; grade checker; strigline man on electronic grade control; manhole builder; dynamite man; powder man; welder; tunnel man; waterblaster - 1000 psi or over; asbestos and/or hazardous waste removal and/or disposal

---

LABO1104-005 05/01/2025

Bollinger, Butler, Cape Girardeau, Carter, Dunklin, Iron, Madison, Mississippi, New Madrid, Pemiscot, Perry, Reynolds, Ripley, Scott, St Francois, Ste Genevieve, Stoddard and Wayne Counties

	Rates	Fringes
LABORER		
GROUP 1	$ 37.25	15.96
GROUP 2	$ 37.25	15.96

LABORERS CLASSIFICATIONS

GROUP 1 - General laborer-flagman, carpenter tenders; salamander Tenders; Dump Man; Ticket Takers; loading trucks under bins, hoppers, and conveyors; track man; cement

handler; dump man on earth fill; georgie buggie man; material batch hopper man; spreader on asphalt machine; material mixer man (except on manholes); coffer dams; riprap pavers rock, block or brick; scaffolds over ten feet not self-supported from ground up; skip man on concrete paving; wire mesh setters on concrete paving; all work in connection with sewer, water, gas, gasoling, oil, drainage pipe, conduit pipe, tile and duct lines and all other pipe lines; power tool operator; all work in connection with hydraulic or general dredging operations; form setters, puddlers (paving only); straw blower nozzleman; asphalt plant platform man; chuck tender; crusher feeder; men handling creosote ties or creosote materials; men working with and handling epoxy material; topper of standing trees; feeder man on wood pulverizers, board and willow mat weavers and cabelee tiers on river work; deck hands; pile dike and revetment work; all laborers working on underground tunnels less than 25 ft. where compressed air is not used; abutement and pier hole men working six (6) ft. or more below ground; men working in coffer dams for bridge piers and footing in the river; barco tamper; jackson or any other similar tamp; cutting torch man; liners, curb, gutters, ditch lines; hot mastic kettlemen; hot tar applicator; hand blade operator; mortar men or brick or block manholes; rubbing concrete, air tool operator under 65 lbs.; caulker and lead man; chain or concrete saw under 15 h.p.; signal Gan; Guard rail and sign erectors.

GROUP 2 - Skilled laborers - Vibrator man; asphalt raker; head pipe layer on sewer work; batterboard man on pipe and ditch work; cliff scalers working from bosun's chairs; scaffolds or platforms on dams or power plants over 10 ft. high; air tool operator over 65 lbs.; stringline man on concrete paving; sandblast man; laser beam man; wagon drill; churn drill; air track drill and all other similar type drills, gunite nozzle man; pressure grout man; screed man on asphalt; concrete saw 15 h.p. and over; grade checker; strigline man on electronic grade control; manhole builder; dynamite man; powder man; welder; tunnel man; waterblaster - 1000 psi or over; asbestos and/or hazardous waste removal and/or disposal

---

PAIN0002-002 09/01/2007

CLARK, FRANKLIN, JEFFERSON, LEWIS, LINCOLN, MARION, PIKE, RALLS, ST. CHARLES, ST. LOUIS (CITY & COUNTY), AND WARREN COUNTIES

	Rates	Fringes
Painters:		
Brush and Roller; Taper	$ 28.61	10.24
High work over 60 feet	$ 29.11	10.24
Lead Abatement	$ 29.36	10.24
Pressure Roller; High work under 60 ft	$ 28.86	10.24
Spray & Abrasive Blasting; Water Blasting (Over 5000 PSI)	$ 30.61	10.24
Taper (Ames Tools & Bazooka)	$ 30.21	10.24

PAIN0002-006 04/01/2023

ADAIR, AUDRAIN, BOONE, CALLAWAY, CHARITON, COLE, GASCONADE, HOWARD, KNOX, LINN, MACON, MONROE, MONTGOMERY, OSAGE, PUTNAM, RANDOLPH, SCHUYLER, SCOTLAND, SHELBY AND SULLIVAN COUNTIES and the City of Booneville.

	Rates	Fringes
Painters:		
Bridges, Dams, Locks or Powerhouses	$ 28.49	15.03
Brush and Roll; Taping, Paperhanging	$ 26.49	15.03
Epoxy or Any Two Part Coating; Sandblasting; Stage or other Aerial Work - Platforms over 50 feet high; Lead Abatement	$ 27.49	15.03
Spray; Structural Steel (over 50 feet)	$ 27.49	15.03
Tapers using Ames or Comparable Tools	$ 27.24	15.03

PAIN0003-004 04/01/2019

CASS, CLAY, CLINTON, JACKSON, JOHNSON, LAFAYETTE, PLATTE & RAY COUNTIES

	Rates	Fringes
Painters:		
Bridgeman; Lead Abatement; Sandblast; Storage Bin & Tanks	$ 33.41	17.76
Brush & Roller	$ 30.54	17.76
Drywall	$ 31.74	17.76
Paper Hanger	$ 31.04	17.76
Stageman; Beltman; Steelman; Elevator Shaft; Bazooka, Boxes and Power Sander; Sprayman; Dipping	$ 32.41	17.76
Steeplejack	$ 36.98	17.76

PAIN0003-011 04/01/2019

BATES, BENTON, CALDWELL, CARROLL, COOPER, DAVIESS, GRUNDY, HARRISON, HENRY, LIVINGSTON, MERCER, MONITEAU, MORGAN, PETTIS & SALINE COUNTIES

	Rates	Fringes
Painters:		
Bridgeman; Lead Abatement; Sandblast; Storage Bin & Tanks	$ 26.73	17.76
Brush & Roller	$ 24.43	17.76
Drywall	$ 25.39	17.76
Paper Hanger	$ 24.83	17.76
Stageman; Beltman; Steelman; Elevator Shaft; Bazooka, Boxes and Power		

Sander; Sprayman; Dipping...$ 26.35 17.76
Steeplejack.....$ 29.58 17.76

PAIN1185-008 04/01/2025

CAMDEN, CRAWFORD, DENT, LACLEDE, MARIES, MILLER, PHELPS, PULASKI AND TEXAS COUNTIES

	Rates	Fringes
Painters:		
Brush and Roller	$ 33.90	17.21
Floor Work	$ 34.90	17.21
Lead Abatement	$ 33.25	17.21
Spray	$ 34.90	17.21
Structural Steel, Sandblasting and All Tank Work	$ 35.90	17.21
Taping, Paperhanging	$ 34.90	17.21

---

* PAIN1292-002 09/01/2025

BOLLINGER, BUTLER, CAPE GIRARDEAU, CARTER, DUNKLIN, MISSISSIPPI, NEW MADRID, OREGON, PEMISCOT, PERRY, REYNOLDS, RIPLEY, SCOTT, SHANNON, STODDARD and WAYNE COUNTIES

	Rates	Fringes
Painters:		
Bridges, Stacks & Tanks	$ 36.53	17.92
Brush & Roller	$ 29.80	17.92
Spray & Abrasive Blasting; Waterblasting (over 5000 PSI)	$ 38.53	17.92

Height Rates (All Areas):
Over 60 ft. $0.50 per hour.
Under 60 ft. $0.25 per hour.

---

* PAIN1292-003 09/01/2025

IRON, MADISON, ST. FRANCOIS, STE. GENEVIEVE and WASHINGTON COUNTIES

	Rates	Fringes
Painters:		
Bridges, Stacks & Tanks	$ 36.53	17.92
Brush & Roller	$ 30.95	17.92
Spray & Abrasive Blasting; Waterblasting (Over 5000 PSI)	$ 38.53	17.92

Height Rates (All Areas):
0ver 60 ft. $0.50 per hour
Under 60 ft. $0.25 per hour.

PAIN2012-001 04/01/2025

ANDREW, ATCHISON, BUCHANAN, DE KALB, GENTRY, HOLT, NODAWAY &

WORTH COUNTIES

	Rates	Fringes
Painters:		
Brush & Roller	$ 36.18	19.97
Sandblaster	$ 40.76	19.97
Steeplejack	$ 44.33	19.97

PAIN2015-001 04/01/2012

BARRY, BARTON, CEDAR, CHRISTIAN, DADE, DALLAS, DOUGLAS, GREENE, HICKORY, HOWELL, JASPER, LAWRENCE, MCDONALD, NEWTON, OZARK, POLK, ST. CLAIR, STONE, TANEY, VERNON, WEBSTER, and WRIGHT COUNTIES

	Rates	Fringes
Painters:		
Finisher	$ 20.18	11.33
Painter	$ 19.75	11.76
Sandblaster, High Man, Spray Man, Vinyl Hanger, Tool Operator	$ 21.18	11.33

PLAS0518-006 03/01/2025

BARRY, BARTON, CEDAR, CHRISTIAN, DADE, DALLAS, DOUGLAS, GREENE, HICKORY, JASPER, LACLEDE, LAWRENCE, MCDONALD, NEWTON, OZARK, POLK, ST. CLAIR, STONE, TANEY, VERNON, WEBSTER, AND WRIGHT COUNTIES

	Rates	Fringes
CEMENT MASON/CONCRETE FINISHER	$ 30.37	12.43

PLAS0518-007 04/01/2025

CASS (Richards-Gebaur AFB only), CLAY, JACKSON, PLATTE AND RAY COUNTIES

	Rates	Fringes
Cement Masons:	$ 39.06	18.71

PLAS0518-011 04/01/2025

ANDREW, ATCHISON, BATES, BUCHANNAN, CLINTON, DEKALB, GENTRY, HENRY, HOLT, JOHNSON, LAFAYETTE, NODAWAY & WORTH COUNTIES

	Rates	Fringes
CEMENT MASON/CONCRETE FINISHER	$ 40.13	20.50

PLAS0518-019 03/01/2025

Adair, Audrain, Benton, Boone, Callaway, Caldwell, Camden, Carroll, Chariton, Cole, Cooper, Daviess, Gasconade, Grundy, Harrison, Howard, Linn, Livingston, Macon, Maries, Mercer, Miller, Moniteau, Monroe, Montgomery, Morgan, Osage, Pettis,

Putnam, Randolph, Saline, Schuyler, Shelby and Sullivan Counties

	Rates	Fringes
CEMENT MASON/CONCRETE FINISHER	$ 33.52	15.88

PLAS0527-001 04/01/2023

	Rates	Fringes
CEMENT MASON		
FRANKLIN, LINCOLN AND WARREN COUNTIES	$ 37.29	20.23
JEFFERSON, ST. CHARLES COUNTIES AND ST.LOUIS (City and County)	$ 38.46	20.13

PLAS0527-004 06/01/2023

CRAWFORD, DENT, IRON, MADISON, MARION, PHELPS, PIKE, PULASKI, RALLS, REYNOLDS, ST. FRANCOIS, STE. GENEVIEVE, SHANNON, TEXAS, WASHINGTON COUNTIES

	Rates	Fringes
CEMENT MASON	$ 32.00	19.72

PLAS0908-001 05/01/2025

BOLLINGER, BUTLER, CAPE GIRARDEAU, CARTER, DUNKLIN, HOWELL, MISSISSIPPI, NEW MADRID, OREGON, PEMISCOT, PERRY, RIPLEY, SCOTT, STODDARD, AND WAYNE COUNTIES

	Rates	Fringes
CEMENT MASON	$ 35.10	18.78

PLUM0008-003 06/01/2024

CASS, CLAY, JACKSON, JOHNSON, AND PLATTE COUNTIES

	Rates	Fringes
Plumbers	$ 56.63	24.54

PLUM0008-017 06/01/2024

BATES, BENTON, CARROLL, HENRY, LAFAYETTE, MORGAN, PETTIS, RAY, ST. CLAIR, SALINE AND VERNON COUNTIES

	Rates	Fringes
Plumbers	$ 56.63	24.54

PLUM0045-003 08/01/2024

ANDREW, ATCHISON, BUCHANAN, CALDWELL, CLINTON, DAVIESS, DEKALB, GENTRY, HARRISON, HOLT, NODAWAY AND WORTH COUNTIES

Rates Fringes

```
Plumbers and Pipefitters.........$ 47.45           26.15
----------------------------------------------------------------
 PLUM0178-003 11/01/2024

BARRY, CEDAR, CHRISTIAN, DADE, DALLAS, DOUGLAS, GREENE,
HICKORY, LACLEDE, LAWRENCE, POLK, STONE, TANEY, WEBSTER AND
WRIGHT COUNTIES


                                  Rates          Fringes

Plumbers and Pipefitters.........$ 39.35           15.72
----------------------------------------------------------------
 PLUM0178-006 11/01/2022

BARTON, JASPER, MCDONALD AND NEWTON COUNTIES

                                  Rates          Fringes

Plumbers and Pipefitters
     Projects $750,000 & under...$ 32.78           15.32
     Projects over $750,000......$ 35.75           15.32
----------------------------------------------------------------
 PLUM0533-004 06/01/2024

BATES, BENTON, CARROLL, CASS, CLAY, HENRY, HICKORY, JACKSON,
JOHNSON, LAFAYETTE, MORGAN, PETTIS, PLATTE, RAY, SALINE, ST.
CLAIR AND VERNON COUNTIES


                                  Rates          Fringes

Pipefitters......................$ 55.56           25.80
----------------------------------------------------------------
 PLUM0562-004 07/01/2023

ADAIR, AUDRAIN, BOLLINGER, BOONE, BUTLER, CALLAWAY,CAMDEN, CAPE
GIRARDEAU,CARTER, CHARITON, CLARK, COLE, COOPER, CRAWFORD,
DENT, DUNKLIN, FRANKLIN, GASCONADE, GRUNDY, HOWARD, HOWELL,
IRON, JEFFERSON, KNOX, LEWIS, LINCOLN, LINN, LIVINGSTON, MACON,
MADISON, MARIES, MARION, MERCER, MILLER, MISSISSIPPI, MONITEAU,
MONROE, MONTGOMERY, NEW MADRID,  OREGON, OSAGE, PEMISCOTT,
PERRY, PHELPS, PIKE, PULASKI, PUTNAM, RALLS, RANDOLPH,
REYNOLDS, RIPLEY, ST. CHARLES, ST.FRANCOIS, STE. GENEVIEVE, ST.
LOUIS, SCHUYLER, SCOTLAND, SCOTT, SHANNON, SHELBY, STODDARD,
SULLIVAN, TEXAS, WARREN, WASHINGTON,AND WAYNE COUNTIES.


                                  Rates          Fringes

Plumbers and Pipefitters
     Mechanical Contracts
     including all piping and
     temperature control work
     $7.0 million & under........$ 46.66           21.99
     Mechanical Contracts
     including all piping and
     temperature control work
     over $7.0 million...........$ 46.66           21.99
----------------------------------------------------------------
 PLUM0562-016 07/01/2023

CAMDEN, COLE, CRAWFORD, FRANKLIN, JEFFERSON, MARIES, MILLER,
MONITEAU, OSAGE, PHELPS, PULASKI, ST. CHARLES, ST. LOUIS (City
```

and County), WARREN and WASHINGTON COUNTIES

	Rates	Fringes
Plumbers		
Mechanical Contracts including all piping and temperature control work $7.0 million & under	$ 46.66	21.99
Mechanical Contracts including all piping and temperature control work over $7.0 million	$ 46.66	21.99

TEAM0013-001 05/01/2025

	Rates	Fringes
Truck drivers (ADAIR, BUTLER, CLARK, DUNKIN, HOWELL, KNOX, LEWIS, OREGON, PUTNAM, RIPLEY, SCHUYLER AND SCOTLAND COUNTIES)		
GROUP 1	$ 35.84	15.85
GROUP 2	$ 35.99	15.85
GROUP 3	$ 36.11	15.85
GROUP 4	$ 35.74	15.85
Truck drivers (AUDRAIN, BOLLINGER, BOONE, CALLAWAY, CAPE GIRARDEAU, CARTER, COLE, CRAWFORD, DENT, GASCONADE, IRON, MACON, MADISON, MARIES, MARION, MILLER, MISSISSIPPI, MONROE, MONTGOMERY, NEW MADRID, OSAGE, PEMISCOT, PERRY, PHELPS, PIKE, PULASKI, RALLS, REYNOLDS, ST. FRANCOIS, STE. GENEVIEVE, SCOTT, SHANNON, SHELBY, STODDARD, TEXAS, WASHINGTON AND WAYNE COUNTIES)		
GROUP 1	$ 36.57	15.85
GROUP 2	$ 36.72	15.85
GROUP 3	$ 36.84	15.85
GROUP 4	$ 36.73	15.85
Truck drivers (FRANKLIN, JEFFERSON and ST. CHARLES COUNTIES)		
GROUP 1	$ 38.93	15.85
GROUP 2	$ 39.08	15.85
GROUP 3	$ 39.15	15.85
GROUP 4	$ 39.04	15.85
Truck drivers (LINCOLN and WARREN COUNTIES)		
GROUP 1	$ 37.58	15.85
GROUP 2	$ 38.73	15.85
GROUP 3	$ 37.80	15.85
GROUP 4	$ 37.69	15.85

TRUCK DRIVERS CLASSIFICATIONS:

GROUP 1: Flat Bed Trucks, Single Axle; Station Wagons; Pickup Trucks; Material Trucks, Single Axle; Tank Wagon, Single Axle

GROUP 2: Agitator and Transit Mix Trucks

GROUP 3: Flat Bed Trucks, Tandem Axle; Articulated Dump Trucks; Material Trucks, Tandem Axle; Tank Wagon, Tandem Axle

GROUP 4: Semi and/or Pole Trailers; Winch, Fork & Steel Trucks; Distributor Drivers and Operators; Tank Wagon, Semi-Trailer; Insley Wagons, Dumpsters, Half-Tracks, Speedace, Euclids and other similar equipment; A-Frame and Derrick Trucks; Float or Low Boy

---

TEAM0056-001 05/01/2025

	Rates	Fringes
Truck drivers (ANDREW, BARTON, BATES, BENTON, CALDWELL, CAMDEN, CARROLL, CEDAR, CHARITON, CHRISTIAN, CLINTON, COOPER, DADE, DALLAS, DAVIESS, DEKALB, DOUGLAS, GREENE, HENRY, HICHKORY, HOWARD, JASPER, LACLEDE, LAWRENCE, LINN, LIVINGSTON, MONITEAU, MORGAN, NEWTON, PETTIS, POLK, RANDOLPH, ST. CLAIR, SALINE, VERNON, WEBSTER AND WRIGHT COUNTIES)		
GROUP 1	$ 36.27	15.85
GROUP 2	$ 36.43	15.85
GROUP 3	$ 36.42	15.85
GROUP 4	$ 36.54	15.85
Truck drivers: (ATCHISON, BARRY, GENTRY, GRUNDY, HARRISON, HOLT, MCDONALD, MERCER, NODAWAY, OZARK, STONE, SULLIVAN, TANEY AND WORTH COUNTIES)		
GROUP 1	$ 35.54	15.85
GROUP 2	$ 35.70	15.85
GROUP 3	$ 35.69	15.85
GROUP 4	$ 35.81	15.85
Truck drivers; (BUCHANAN, JOHNSON AND LAFAYETTE COUNTIES)		
GROUP 1	$ 35.93	15.75
GROUP 2	$ 36.04	15.75
GROUP 3	$ 36.08	15.75
GROUP 4	$ 36.08	15.75

TRUCK DRIVER CLASSIFICATIONS

GROUP 1: Flat bed trucks single axle; station wagons; pickup trucks; material trucks single axle; tank wagons single axle.

GROUP 2: Agitator and transit mix-trucks.

GROUP 3: Flat bed trucks tandem axle; articulated dump trucks; material trucks tandem axle; tank wagons tandem axle.

GROUP 4: Semi and/or pole trailers; winch, fork & steel trucks; distributor drivers & operators; tank wagons semi-trailer; insley wagons, dumpsters, half-tracks, speedace, euclids & other similar equipment; A-frames and derrick trucks; float or low boy.

TEAM0245-001 03/26/2012

BARRY, BARTON, CAMDEN, CEDAR, CHRISTIAN, DALLAS, DENT, DOUGLAS, GREENE, HICKORY, HOWELL, JASPER, LACLEDE, LAWRENCE, MCDONALD, MILLER, NEWTON, OZARK, PHELPS, POLK, PULASKI, SHANNON, STONE, TANEY, TEXAS, VERNON, WEBSTER AND WRIGHT COUNTIES

	Rates	Fringes
Truck drivers:		
Traffic Control Service Driver	$ 20.45	0.00

PAID HOLIDAYS: New Year's Day, Decoration Day, July 4th, Labor Day, Thanksgiving Day, Christmas Day, employee's birthday and 2 personal days.

TEAM0541-001 04/01/2025

CASS, CLAY, JACKSON, PLATTE AND RAY COUNTIES

	Rates	Fringes
Truck drivers:		
GROUP 1	$ 38.61	15.85
GROUP 2	$ 38.04	15.85
GROUP 3	$ 37.52	15.85

TRUCK DRIVERS CLASSIFICATIONS

GROUP 1: Mechanics and Welders, Field; A-Frame Low Boy-Boom ruck Driver.

GROUP 2: Articulated Dump Truck; Insley Wagons: Dump Trucks, Excavating, 5 cu yds and over; Dumpsters; Half-Tracks: Speedace: Euclids & similar excavating equipment Material trucks, Tandem Two teams; Semi-Trailers; Winch trucks-Fork trucks; Distributor Drivers and Operators; Agitator and Transit Mix; Tank Wagon Drivers, Tandem or Semi; One Team; Station Wagons; Pickup Trucks; Material Trucks, Single Axle; Tank Wagon Drivers, Single Axle

GROUP 3: Oilers and Greasers - Field

TEAM0682-002 05/01/2025

ST LOUIS CITY AND COUNTY

	Rates	Fringes
Truck drivers:		
GROUP 1	$ 37.83	9.85+a+b+c
GROUP 2	$ 37.83	9.85+a+b+c
GROUP 3	$ 37.83	9.85+a+b+c

a. PENSION: 5/1/2012 - $182.20 per week.

b. HAZMAT PREMIUM: If Hazmat certification on a job site is required by a state or federal agency or requested by project owner or by the employer, employees on that job site shall receive $1.50 premium pay.

TRUCK DRIVERS CLASSIFICATIONS

GROUP 1 - Pick-up trucks; forklift, single axle; flatbed trucks; job site ambulance, and trucks or trailers of a water level capacity of 11.99 cu. yds. or less

GROUP 2 - Trucks or trailers of a water level capacity of 12.0 cu yds. up to 22.0 cu yds. including euclids, speedace and similar equipment of same capacity and compressors

GROUP 3 - Trucks or trailers of a water level capacity of 22.0 cu. yds & over including euclids, speedace & all floats, flatbed trailers, boom trucks, winch trucks, including small trailers, farm wagons tilt-top trailers, field offices, tool trailers, concrete pumps, concrete conveyors & gasoline tank trailers and truck mounted mobile concrete mixers

FOOTNOTE FOR TRUCK DRIVERS:

c. PAID HOLIDAYS: Christmas Day, Independence Day, Labor Day, Memorial Day, Veterans Day, New Years Day, Thanksgiving Day

d. PAID VACATION: 3 days paid vacation for 600 hours of service in any one contract year; 4 days paid vacation for 800 hours of service in any one contract year; 5 days paid vacation for 1,000 hours of service in any one contract year. When such an employee has completed 3 years of continuous employment with the same employer and then works the above required number of hours, he shall receive double the number of days of vacation specified above. When such an employee has completed 10 years of continuous employment with the same employer and then works the above required number of hours, he shall receive triple the number of days of vacation specified above. When such an employee has completed 15 years of continuous employment with the same employer and then works the above required number of hours, he shall receive 4 times the number of days of vacation specified above.

WELDERS - Receive rate prescribed for craft performing operation to which welding is incidental.

==========

Note: Executive Order (EO) 13706, Establishing Paid Sick Leave for Federal Contractors applies to all contracts subject to the Davis-Bacon Act for which the contract is awarded (and any solicitation was issued) on or after January 1, 2017. If this contract is covered by the EO, the contractor must provide employees with 1 hour of paid sick leave for every 30 hours they work, up to 56 hours of paid sick leave each year. Employees must be permitted to use paid sick leave for their own illness, injury or other health-related needs, including

preventive care; to assist a family member (or person who is like family to the employee) who is ill, injured, or has other health-related needs, including preventive care; or for reasons resulting from, or to assist a family member (or person who is like family to the employee) who is a victim of, domestic violence, sexual assault, or stalking. Additional information on contractor requirements and worker protections under the EO is available at https://www.dol.gov/agencies/whd/government-contracts.

Note: Executive Order 13658 generally applies to contracts subject to the Davis-Bacon Act that were awarded on or between January 1, 2015 and January 29, 2022, and that have not been renewed or extended on or after January 30, 2022. Executive Order 13658 does not apply to contracts subject only to the Davis-Bacon Related Acts regardless of when they were awarded. If a contract is subject to Executive Order 13658, the contractor must pay all covered workers at least $13.30 per hour (or the applicable wage rate listed on this wage determination, if it is higher) for all hours spent performing on the contract in 2025. The applicable Executive Order minimum wage rate will be adjusted annually. Additional information on contractor requirements and worker protections under Executive Order 13658 is available at www.dol.gov/whd/govcontracts.

Unlisted classifications needed for work not included within the scope of the classifications listed may be added after award only as provided in the labor standards contract clauses (29CFR 5.5 (a) (1) (iii)).

The body of each wage determination lists the classifications and wage rates that have been found to be prevailing for the type(s) of construction and geographic area covered by the wage determination. The classifications are listed in alphabetical order under rate identifiers indicating whether the particular rate is a union rate (current union negotiated rate), a survey rate, a weighted union average rate, a state adopted rate, or a supplemental classification rate.

Union Rate Identifiers

A four-letter identifier beginning with characters other than ""SU"", ""UAVG"", ?SA?, or ?SC? denotes that a union rate was prevailing for that classification in the survey. Example: PLUM0198-005 07/01/2024. PLUM is an identifier of the union whose collectively bargained rate prevailed in the survey for this classification, which in this example would be Plumbers. 0198 indicates the local union number or district council number where applicable, i.e., Plumbers Local 0198. The next number, 005 in the example, is an internal number used in processing the wage determination. The date, 07/01/2024 in the example, is the effective date of the most current negotiated rate.

Union prevailing wage rates are updated to reflect all changes over time that are reported to WHD in the rates in the collective bargaining agreement (CBA) governing the classification.

Union Average Rate Identifiers

The UAVG identifier indicates that no single rate prevailed for those classifications, but that 100% of the data reported for the classifications reflected union rates. EXAMPLE: UAVG-OH-0010 01/01/2024. UAVG indicates that the rate is a weighted union average rate. OH indicates the State of Ohio. The next number, 0010 in the example, is an internal number used in producing the wage determination. The date, 01/01/2024 in the example, indicates the date the wage determination was updated to reflect the most current union average rate.

A UAVG rate will be updated once a year, usually in January, to reflect a weighted average of the current rates in the collective bargaining agreements on which the rate is based.

Survey Rate Identifiers

The ""SU"" identifier indicates that either a single non-union rate prevailed (as defined in 29 CFR 1.2) for this classification in the survey or that the rate was derived by computing a weighted average rate based on all the rates reported in the survey for that classification. As a weighted average rate includes all rates reported in the survey, it may include both union and non-union rates. Example: SUFL2022-007 6/27/2024. SU indicates the rate is a single non-union prevailing rate or a weighted average of survey data for that classification. FL indicates the State of Florida. 2022 is the year of the survey on which these classifications and rates are based. The next number, 007 in the example, is an internal number used in producing the wage determination. The date, 6/27/2024 in the example, indicates the survey completion date for the classifications and rates under that identifier.

?SU? wage rates typically remain in effect until a new survey is conducted. However, the Wage and Hour Division (WHD) has the discretion to update such rates under 29 CFR 1.6(c)(1).

State Adopted Rate Identifiers

The ""SA"" identifier indicates that the classifications and prevailing wage rates set by a state (or local) government were adopted under 29 C.F.R 1.3(g)-(h). Example: SAME2023-007 01/03/2024. SA reflects that the rates are state adopted. ME refers to the State of Maine. 2023 is the year during which the state completed the survey on which the listed classifications and rates are based. The next number, 007 in the example, is an internal number used in producing the wage determination. The date, 01/03/2024 in the example, reflects the date on which the classifications and rates under the ?SA? identifier took effect under state law in the state from which the rates were adopted.

WAGE DETERMINATION APPEALS PROCESS

1) Has there been an initial decision in the matter? This can be:

a) a survey underlying a wage determination
b) an existing published wage determination
c) an initial WHD letter setting forth a position on a wage determination matter
d) an initial conformance (additional classification and rate) determination

On survey related matters, initial contact, including requests for summaries of surveys, should be directed to the WHD Branch of Wage Surveys. Requests can be submitted via email to davisbaconinfo@dol.gov or by mail to:

Branch of Wage Surveys
Wage and Hour Division
U.S. Department of Labor
200 Constitution Avenue, N.W.
Washington, DC 20210

Regarding any other wage determination matter such as conformance decisions, requests for initial decisions should be directed to the WHD Branch of Construction Wage Determinations. Requests can be submitted via email to BCWD-Office@dol.gov or by mail to:

Branch of Construction Wage Determinations
Wage and Hour Division
U.S. Department of Labor
200 Constitution Avenue, N.W.
Washington, DC 20210

2) If an initial decision has been issued, then any interested party (those affected by the action) that disagrees with the decision can request review and reconsideration from the Wage and Hour Administrator (See 29 CFR Part 1.8 and 29 CFR Part 7). Requests for review and reconsideration can be submitted via email to dba.reconsideration@dol.gov or by mail to:

Wage and Hour Administrator
U.S. Department of Labor
200 Constitution Avenue, N.W.
Washington, DC 20210

The request should be accompanied by a full statement of the interested party's position and any information (wage payment data, project description, area practice material, etc.) that the requestor considers relevant to the issue.

3) If the decision of the Administrator is not favorable, an interested party may appeal directly to the Administrative Review Board (formerly the Wage Appeals Board). Write to:

Administrative Review Board
U.S. Department of Labor
200 Constitution Avenue, N.W.
Washington, DC 20210.

==========

END OF GENERAL DECISION"