Department of Transportation
Federal Aviation Administration

LEV-VOR
Leeville (LEV) VORTAC Replacement
Grand Isle, Louisiana

[redacted]

Final Design Submission
September 12, 2025

FOR OFFICIAL USE ONLY
PUBLIC AVAILABILITY TO BE DETERMINED UNDER 5 USC 552

JACOBS
1100 N GLEBE RD.
SUITE 500
ARLINGTON, VA 22201

REV.	APPROVED DATE	DESCRIPTION	JCN	REDLINE DATE	APVD

COMMONWEALTH OF VIRGINIA
WILLIAM WEBBER STEVENS
Lic. No. 3484
09/12/25
ARCHITECT

Jacobs

DEPARTMENT OF TRANSPORTATION
FEDERAL AVIATION ADMINISTRATION
CENTRAL SERVICE REGION — FT WORTH, TX

LEEVILLE (LEV) VORTAC REPLACEMENT

COVER SHEET

GRAND ISLE — LEEVILLE (LEV) VORTAC — LA

REVIEWED BY	SUBMITTED BY	APPROVED BY
	SUBMITTER'S TITLE	APPROVER'S TITLE

LEEVILLE VORTAC
GRAND ISLE
LOUISIANA

DESIGNED BY: J HALEC
DRAWN BY: J HALEC
CHECKED BY: W. STEVENS
ISSUED BY: ENGINEERING SERVICES TERMINAL
DATE: 9/12/2025
JCN: 1508914
DRAWING NO.: LEV - D - VORTAC - G001
REV.

PLOT DATE/TIME: 9/11/2025 11:04:12 AM

INDEX OF DRAWINGS

DRAWING NUMBER	DRAWING TITLE
GENERAL	
G001	COVER SHEET
G002	INDEX OF DRAWINGS, GENERAL NOTES, LOCATION MAP & BUILDING CODE ANALYSIS
G003	GENERAL ABBREVIATIONS
G004	CONSTRUCTION STAGING NOTES
G005	CONSTRUCTION STAGING PLAN
G101	LIFE SAFETY PLAN
CIVIL	
C001	GENERAL NOTES, LEGEND, AND ABBREVIATIONS
VF100	EXISTING CONDITIONS PLAN
VF101	EXISTING CONDITIONS PLAN
VF102	EXISTING CONDITIONS PLAN
VF103	EXISTING CONDITIONS PLAN
VF104	EXISTING CONDITIONS PLAN
CD100	DEMOLITION PLAN
CD101	EXISTING CONDITIONS AND DEMOLITION PLAN
CD102	EXISTING CONDITIONS AND DEMOLITION PLAN
CD103	EXISTING CONDITIONS AND DEMOLITION PLAN
CD104	EXISTING CONDITIONS AND DEMOLITION PLAN
C100	SITE PLAN
C101	SITE PLAN
C110	DIMENSIONING PLAN
C120	TRUCK MOVEMENT PLAN
C121	TRUCK MOVEMENT DETAILS
C200	GRADING PLAN
C400	PROFILES AND DETAILS
C500	UTILITY PLAN
C501	UTILITY PLAN
C502	UTILITY PLAN
C503	UTILITY PLAN
C504	UTILITY PLAN
CE100	EROSION AND SEDIMENT CONTROL PLAN PHASE I
CE110	EROSION AND SEDIMENT CONTROL PLAN PHASE II
CE500	EROSION AND SEDIMENT CONTROL NOTES AND DETAILS
ARCHITECTURAL	
A101	OVERALL PLANS
A102	OVERALL PLANS
A110	EQUIPMENT SHELTER PLANS
A201	EXTERIOR ELEVATIONS AND EXTERIOR MATERIALS FINISH SCHEDULE
A202	EXTERIOR ELEVATIONS
A203	ENLARGED EXTERIOR ELEVATIONS AND EQUIPMENT SHELTER BUILDING SECTION
A225	INTERIOR ELEVATIONS
A301	ARCHITECTURAL STAIR PLANS, SECTION, AND DETAILS
A501	DOOR SCHEDULE AND DETAILS
A901	PERSPECTIVE VIEWS
STRUCTURAL	
S-001	GENERAL STRUCTURAL NOTES
S-002	STRUCTURAL ABBREVIATIONS, SYMBOLS, LEGEND
S-003	LOAD PLANS
S-101	OVERALL PLANS
S-102	FOUNDATION PLAN
S-103	EQUIPMENT SHELTER PLATFORM FRAMING PLAN
S-104	COUNTERPOISE FRAMING PLAN
S-105	TACAN TILT DOWN PLAN AND SECTION
S-201	BRACING ELEVATIONS
S-202	BRACING ELEVATIONS
S-301	BUILDING SECTIONS
S-501	FOUNDATION DETAILS
S-502	STEEL DETAILS
S-541	EQUIPMENT SUPPORT DETAILS
S-551	STRUCTURAL DETAILS
S-901	3D VIEWS

DRAWING NUMBER	DRAWING TITLE
MECHANICAL	
M001	HVAC LEGEND, ABBREVIATIONS, AND GENERAL NOTES
M002	HVAC SCHEDULES
M010	HVAC ENLARGED PLAN - FACILITY SHELTER PLATFORM
M020	HVAC SECTION VIEWS
M021	HVAC SEISMIC DETAILS
M022	HVAC SEISMIC DETAILS
M023	HVAC TYPICAL DETAILS
M024	HVAC TYPICAL DETAILS
M025	HVAC PROPANE TANK AND PIPING DETAILS
M026	ENGINE GENERATOR DETAILS
M030	HVAC CONTROLS - EQUIPMENT ROOM (AH-1/HP-1, AH-2/HP-2, EF-3)
M031	HVAC CONTROLS - E/G ROOM (EF-1, EF-2, EUH-1)
ELECTRICAL	
E001	ELECTRICAL GENERAL NOTES AND ABBREVIATIONS
E002	ELECTRICAL SYMBOLS
E003	ELECTRICAL SITE PLAN
E004	ELECTRICAL SITE PLAN
E005	ELECTRICAL SITE PLAN
E101	ELECTRICAL OVERALL PLANS
E102	ELECTRICAL OVERALL PLANS
E111	ELECTRICAL LIGHTING PLANS
E121	ELECTRICAL POWER PLAN
E131	LIGHTNING PROTECTION AND GROUNDING PLANS
E132	LIGHTNING PROTECTION AND GROUNDING PLANS
E301	ELECTRICAL SECTIONS
E302	ELECTRICAL SECTIONS
E303	ELECTRICAL SECTIONS
E304	ELECTRICAL SECTIONS
E305	ELECTRICAL SECTIONS
E401	ELECTRICAL ENLARGED POWER PLANS
E402	ELECTRICAL ENLARGED POWER PLANS
E501	PANELBOARD SCHEDULES
E551	ELECTRICAL SCHEDULES
E601	ELECTRICAL DETAILS
E602	ELECTRICAL DETAILS
E603	ELECTRICAL DETAILS
E604	ELECTRICAL DETAILS
E605	ELECTRICAL DETAILS
E606	ELECTRICAL DETAILS
E607	ELECTRICAL DETAILS
E608	ELECTRICAL DETAILS
E801	ELECTRICAL POWER ONE-LINE DIAGRAM
E802	ELECTRICAL POWER SYSTEM GROUNDING DIAGRAM
E803	ELECTRICAL E/G AND ATS EQUIPMENT INTERCONNECT CONTROL DIAGRAM
E804	ELECTRICAL E/G AND ATS EQUIPMENT LAYOUT DIAGRAMS
E805	FACILITY SIGNAL REFERENCE STRUCTURE (SRS) - GROUNDING RISER DIAGRAM
E806	ELECTRICAL ERMS CONNECTION DIAGRAM

GENERAL SYMBOLS LEGEND

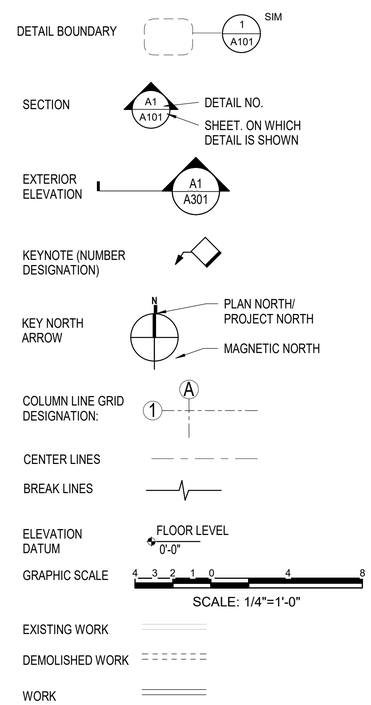

VICINITY MAP

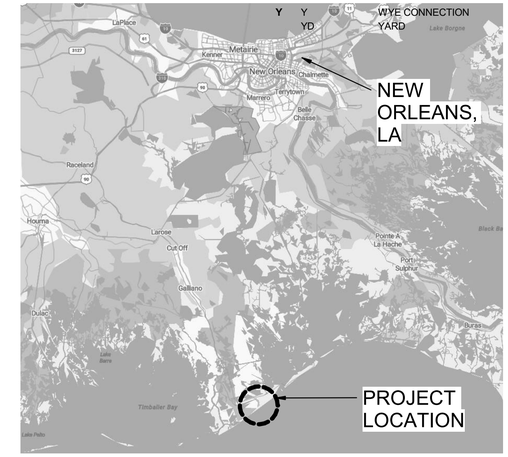

LOCATION PLAN

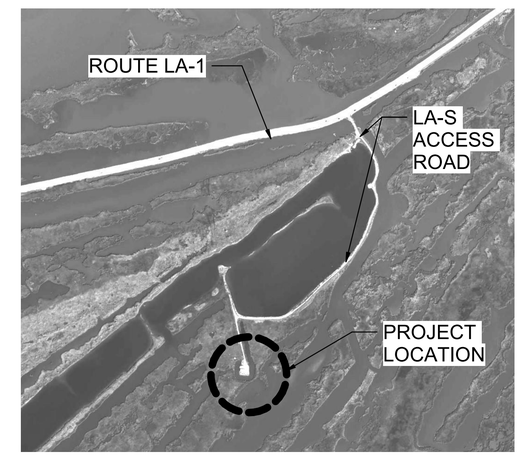

PROJECT LOCATION:
FEDERAL AVIATION ADMINISTRATION
LEEVILLE (LEV) PBN VORTAC
LAFOURCHE PARISH, LA

GENERAL NOTES

A. DIMENSION LINES SHOWN ON ARCHITECTURAL SHEETS ARE FROM COLUMN CENTER LINES AND FACE OF MASONRY, CONCRETE OR FINISHED FACE OF WALL, UNLESS OTHERWISE NOTED.

B. CLEAN CONSTRUCTION AREAS DAILY. CONSTRUCTION DEBRIS & EQUIPMENT MUST NOT BE LEFT IN OCCUPIED AREAS.

C. DO NOT SCALE DRAWINGS.

D. WORK IN CONFINED SPACES OR AREAS MUST BE DONE IN ACCORDANCE WITH OSHA REQUIREMENTS, 29 CFR 1910.146 AND 1926.21(B)(6).

E. ROOM NAMES AND NUMBERS AS INDICATED ARE FOR PROJECT DOCUMENTATION PURPOSES ONLY. COORDINATE WITH COR FINAL ROOM NAMES AND NUMBERS FOR ANY ROOM SIGNAGE, BUILDING EQUIPMENT INTEGRATION OR OTHER SYSTEM INTEGRATION WHICH RELIES ON ACTUAL FACILITY ROOM NAMES AND NUMBERS.

F. COMPLY WITH RULES AND REGULATIONS FOR FEDERAL, STATE, COUNTY, AND LOCAL MUNICIPALITIES, AND INCLUDING, BUT NOT LIMITED TO, OSHA AND REGULATIONS CONCERNING PROJECT SAFETY.

G. REMOVE AND DISPOSE OF RUBBISH, TRASH, DEBRIS, ORGANIC AND DEMOLISHED MATERIAL TO FACILITATE CONSTRUCTION OF THE PROPOSED IMPROVEMENTS IN A LEGAL MANNER. COORDINATE WITH CONSTRUCTION DOCUMENTS AND COR FOR OBTAINING REQUIRED PERMITS.

H. DAMAGE TO EXISTING INFRASTRUCTURE AS A RESULT OF THE WORK MUST BE REPAIRED/REPLACED TO THE SATISFACTION OF THE COR TO ENSURE THAT THE WORK REMAINS ON SCHEDULE.

BUILDING CODE ANALYSIS

APPLICABLE CODES AND REGULATIONS	INTERNATIONAL BUILDING CODE (IBC), 2024 EDITION INTERNATIONAL FIRE CODE, 2024 EDITION INTERNATIONAL MECHANICAL CODE, 2024 EDITION OCCUPATIONAL SAFETY & HEALTH ADMINISTRATION (OSHA) INDUSTRY SAFETY & HEALTH STANDARDS (29 CFR 1910 SUBPART D AND 1926 - CURRENT ISSUE) NFPA 101 - LIFE SAFETY CODE, 2024 EDITION NFPA 58, LIQUEFIED PETROLEUM GAS CODE, 2024 EDITION NFPA 70 (NATIONAL ELECTRICAL CODE (NEC)), 2023 EDITION NFPA 780, STANDARD FOR INSTALLATION OF LIGHTNING PROTECTION SYSTEMS, 2026 EDITION NFPA 110, STANDARD FOR EMERGENCY AND STANDBY POWER SYSTEMS, 2025 EDITION NFPA 1142, STANDARD ON WATER SUPPLIES FOR SUBURBAN AND RURAL FIREFIGHTING, 2022 EDITION
OCCUPANCY CLASSIFICATION	IBC: GROUP U NFPA 101: SPECIAL PURPOSE INDUSTRIAL OCCUPANCY, OPEN STRUCTURE
CODE SUMMARY	CONSTRUCTION TYPE: TYPE V SPRINKLERED: NO FIRE ALARM: NO STORIES 1 (ACTUAL) / 2 (ALLOWABLE) HEIGHT: 26FT (ACTUAL) / 55 FT (ALLOWABLE) FLOOR AREA: 590 SQFT (ACTUAL) / 8,500 SQFT (ALLOWABLE) MAX DEAD END: 50 FT (INDUSTRIAL)
EGRESS REQUIREMENTS	MAX TRAVEL DISTANCE: 200FT (INDUSTRIAL, UNSPRINKLERED) MAX TRAVEL DISTANCE: 200FT (OPEN STRUCTURE, SINGLE EXIT) MAX COMMON PATH OF TRAVEL: 50FT (INDUSTRIAL) MIN CLEAR WIDTH (EXIT DOOR): 32 INCHES
SEISMIC DESIGN CATEGORY	C

FOR OFFICIAL USE ONLY
PUBLIC AVAILABILITY TO BE DETERMINED UNDER 5 USC 552

COMMONWEALTH OF VIRGINIA
WILLIAM MICHAEL STEVENS
Lic. No. 3484
09/12/25
ARCHITECT

JACOBS
1100 N GLEBE RD.
SUITE 500
ARLINGTON, VA 22201

REV.	APPROVED DATE	DESCRIPTION	JCN	REDLINE DATE	APVD

Jacobs

DEPARTMENT OF TRANSPORTATION
FEDERAL AVIATION ADMINISTRATION
CENTRAL SERVICE REGION — FT WORTH, TX

LEEVILLE (LEV) VORTAC REPLACEMENT

INDEX OF DRAWINGS, GENERAL NOTES, LOCATION MAP & BUILDING CODE ANALYSIS

GRAND ISLE — LEEVILLE (LEV) VORTAC — LA

LEEVILLE VORTAC
GRAND ISLE
LOUISIANA

REVIEWED BY	SUBMITTED BY	APPROVED BY
	SUBMITTER'S TITLE	APPROVER'S TITLE

DESIGNED BY: J. HALEC
DRAWN BY: J. HALEC
CHECKED BY: W. STEVENS
ISSUED BY: ENGINEERING SERVICES TERMINAL
DATE: 9/12/2025
JCN: 1508914
DRAWING NO.: LEV - D - VORTAC - G002
REV.

PLOT DATE/TIME: 9/11/2025 11:04:16 AM

GENERAL ABBREVIATIONS

A	A	AMPERE, AIR, COMPRESSED AIR LINE
	AA	AIR COOLED
	AAV	AUTOMATIC AIR VENT
	AC	ALTERNATING CURRENT, ASPHALT CONCRETE, AIR COMPRESSOR
	ACC	AIR COOLED LIQUID CHILLER
	ACD	ADDRESSABLE CONTROL DEVICE
	ACF	ACCESS FLOOR SYSTEM
	ACM	ASBESTOS CONTAINING MATERIAL
	ACP	ACOUSTICAL CEILING PANEL
	ACT	ACCESS CONTROL TERMINAL, ACOUSTICAL CEILING TILE
	ACU	AIR CONDITIONING UNIT
	A/C	AIR CONDITIONING
	AD	AREA DRAIN, ACCESS DOOR
	ADJ	ADJACENT, ADJUSTABLE
	ADR	ACCESS DOOR
	ADTN	ADMINISTRATIVE DATA TRANSMISSION NETWORK
	AED	AUTOMATED EXTERNAL DEFIBRILLATOR
	AF	AMPERE FRAME, AIR FLOW SENSOR
	AFF	ABOVE FINISH FLOOR
	AFMS	AIR FLOW MEASURING STATION
	AH	AIR HANDLING UNIT
	AHU	AIR HANDLING UNIT
	AIC	AMPERES INTERRUPTING CAPACITY
	AID	ADDRESSABLE INTERFACE DEVICE
	AIF	AIR INTAKE FILTER
	AL	ALUMINUM
	ALT	ALTERNATE
	AM	AMP METER
	AMM	AMMETER
	ANN	ANNUNCIATOR
	AO	ANALOG OUTPUT
	AP	ANNUNCIATOR POINT
	APC	ACOUSTICAL PANEL CEILING
	APPROX	APPROXIMATELY
	ARCH	ARCHITECT(URAL)
	ARTCC	AIR ROUTE TRAFFIC CONTROL CENTER
	ARTS	AUTOMATED RADAR TERMINAL SYSTEM
	AS	AIR SEPARATOR
	ASSY	ASSEMBLY
	AT	AMPERE TRIP, AIR TRAFFIC
	ATB	AIR TERMINAL BOX
	ATS	AUTOMATIC TRANSFER SWITCH
	AUX	AUXILIARY
	AV	ACID VENT
	AVG	AVERAGE
	AWG	AMERICAN WIRE GUAGE
	AWP	ACOUSTICAL WALL PANEL
	AWR	AUTOMATION WING REHABILITATION
	&	AND
	@	AT
B	B	BOILER, BUILDING
	BAT CHR	BATTERY CHARGER
	BC	BARE COPPER
	BD	BOARD, BACK-DRAFT DAMPER, BLOWDOWN
	BEL	BELOW
	BF	BLIND FLANGE
	BFP	BACK FLOW PREVENTER
	BFV	BUTTERFLY VALVE
	BFW	BOILER FEED WATER
	BHP	BRAKE HORSE POWER
	BKR	BREAKER
	BLDG	BUILDING
	BLKG	BLOCKING
	BLO	BLOWER
	BLV	BALANCING VALVE
	BM	BENCH MARK, BEAM
	BOCA	BUILDING OFFICIALS AND CODE ADMINISTRATORS INTERNATIONAL, INC
	BOD	BOTTOM OF DUCT, BASIS OF DESIGN
	BOP	BOTTOM OF PIPE
	BOT, BOTT	BOTTOM
	BPU	BREAKER PROGRAMMING UNIT
	BRG	BEARING
	BSMT	BASEMENT
	BTU	BRITISH THERMAL UNIT
	BTU/H	BRITISH THERMAL UNIT PER HOUR
	BV	BALL VALVE
	BWP	BACK WATER PREVENTER
	BWV	BACK WATER VALVE
C	C	CONDUIT
	CA	COMBUSTION AIR
	CAB	CABINET
	CB	CIRBUIT BREAKER
	CC	COOLING COIL
	CCMS	CENTRAL CONTROL AND MONITORING SYSTEM
	CD	CONTROL DAMPER, CEILING DIFFUSER, CONDENSATE DRAIN
	CENT	CENTRIFUGAL
	CFH	CUBIC FEET PER HOUR
	CFM	CUBIC FEET PER MINUTE
	CFT	CUBIC FOOT
	CG	CEILING GRILLE
	CH	CHILLER
	CI	CURB INLET, CAST IRON
	CIP	CAST IRON PIPE, CAST IN PLACE
	CIR	CIRCULATING
	CKT	CIRCUIT
	CL	CENTER LINE
	CLF	CURRENT LIMITING FUSE
	CLG	CEILING
	CLR	CLEAR
	CMP	CORRUGATED METAL PIPE
	CMU	CONCRETE MASONRY UNIT
	CO	CLEANOUT, CONDUIT ONLY
	COL	COLUMN
	COMB	COMBINATION, COMBINE, COMBUSTION AIR
	COMM	COMMUNICATIONS
	COMP	COMPRESSIBLE, COMPRESSED
	CONC	CONCRETE
	COND	CONDITION, CONDENSATE
	CONN	CONNECTION
	CONST	CONSTRUCTION
	CONT	CONTINUOUS, CONTINUATION
	CONTR	CONTRACTOR
	COORD	COORDINATE
	COR	CONTRACTING OFFICERS REPRESENTATIVE
	CP	CONTROL PANEL, CIRCULATING PUMP
	CPC	CRITICAL POWER CENTER
	CPDS	CRITICAL POWER DISTRIBUTION SYSTEM
	CPT	CARPET
	CPU	CENTRAL PROCESSING UNIT
	CR	CEILING REGISTER, CONTROL RELAY
	CRAC	COMPUTER ROOM AIR CONDITIONING UNIT
	CRAH	COMPUTER ROOM AIR HANDLING UNIT
	CRU	COMPUTER ROOM UNIT
	CS	CONTROL SWITCH
	CT	CABLE TRAY, COOLING TOWER
	CTR	CENTER, COOLING TOWER WATER RETURN
	CTS	COOLING TOWER WATER SUPPLY
	CU	CONDENSING UNIT
	CW	DOMESTIC COLD WATER
	CWR	CHILLER WATER RETURN
	CWS	CHILLER WATER SUPPLY
	CWV	COMBINATION WASTE AND VENT
	CU	CONDENSING UNIT
	CV	CONTROL VALVE, CONSTANT VOLUME TERMINAL
	CYD	CUBIC YARD
D	D	DRAIN, DELTA CONNECTION, DIFFUSER, DAMPER
	DB	DIRECT BURIAL, DRY BULB
	DBL	DOUBLE
	DC	DIRECT CURRENT
	DDCP	DIRECT DIGITAL CONTROL PANEL
	DEG	DEGREE(S)
	DET	DETAIL
	DGP	DATA GATHERING PANEL
	DI	DROP INLET, DAMPER POSITION INDICATOR, DIGITAL INPUT
	DIA	DIAMETER
	DIAG	DIAGONAL
	DISC	DISCONNECT
	DISP	DISPENSER
	DIST	DISTRIBUTION
	DL	DEAD LOAD
	DM	DEMAND METER
	DN	DOWN
	DO	DIGITAL OUTPUT
	DOM	DOMESTIC
	DP	DUSTPROOF PARTITION, DIFFERENTIAL PRESSURE SWITCH
	DPDT	DOUBLE POLE DOUBLE THROW
	DPNL	DISTRIBUTION PANEL
	DPST	DOUBLE POLE SINGLE THROW
	DR	DOOR
	DWG(S)	DRAWING(S)
E	EA	EACH, EXHAUST AIR
	EAT	ENTERING AIR TEMPERATURE
	ECP	ENGINE CONTROL PANEL
	EDAM	ELECTRICAL DATA ACQUISITION AND MONITORING
	EF	EXHAUST FAN
	EFF	EFFICIENCY
	EG	ENGINE GENERATOR, EXHAUST GRILLE
	EH	ELECTRIC HEATER
	EHC	ELECTRIC HEATING COIL
	EL, ELEV	ELEVATION, ELEVATOR
	ELEC	ELECTRIC(AL)
	EMD	ESTIMATED MAXIMUM DEMAND
	EMERG	EMERGENCY
	EMT	ELECTRICAL METAL TUBING
	ENT, ENTR	ENTRANCE
	EP	EXHAUST PIPE
	EPMS	ELECTRICAL POWER MONITORING SYSTEM
	EPX	EPOXY
	EQ	EQUAL
	EQUIP	EQUIPMENT
	ER	EXHAUST REGISTER
	ERMS	ENVIRONMENTAL REMOTE MONITORING SYSTEM
	ES	EXHAUST SILENCER
	ET	ELECTRIC HEAT TRACE
	EWC	ELECTRIC WATER COOLER
	EWH	ELECTRIC WATER HEATER
	EXH	EXHAUST
	EXIST, EX	EXISTING
	EXP	EXPOSED
	EXPN	EXPANSION
	EXT	EXTERIOR
	EW	EYEWASH
F	F	FILTER, FIRE LINE
	FA	FAN COOLED
	FAA	FEDERAL AVIATION ADMINISTRATION
	FC	FAN COIL UNIT
	FCO	FLOOR CLEANOUT
	FCV	FLOW CONTROL VALVE
	FD	FIRE DAMPER OR FLOOR DRAIN
	FD/SD	COMBINATION FIRE AND SMOKE DAMPER
	FDR	FEEDER
	FE	FIRE EXTINGUISHER
	FEC	FIRE EXTINGUISHER CABINET
	FEPC	FRONT END PERSONAL COMPUTER
	FFE	FINISHED FLOOR ELEVATION
	FHC	FIRE HOSE CABINET
	FI	FLANGE INSULATION, FLOW INDICATOR
	FIN	FINISH
	FIX, FIXT	FIXTURE
	FL, FLR	FLOOR
	FLA	FULL LOAD AMPERES
	FLEX	FLEXIBLE DUCT
	FLG	FLANGE
	FLUOR	FLUORESCENT
	FM	FLOW METER, FIRE MAIN
	FO	FIBER OPTIC
	FOL	FUEL OIL LEVEL
	FOR	FUEL OIL RETURN
	FOS	FUEL OIL SUPPLY
	FOT	FIBER OPTIC TERMINAL
	FOV	FUEL OIL VENT
	FPM	FEET PER MINUTE
	FPU	FIELD PROGRAMMING UNIT
	FRP	FIBER GLASS REINFORCED PLASTIC
	FRT	FIRE RETARDANT TREATED
	FS	FLOW SWITCH
	FT, '	FEET
	FTR	FINNED TUBE RADIATION
	FV	FULL VOLTAGE
	FZ	FREEZESTAT
G	G	GAS
	GA	GAGE, GAUGE
	GALV	GALVANIZED
	GEN	GENERATOR
	GFE	GOVERNMENT FURNISHED EQUIPMENT
	GFM	GOVERNMENT FURNISHED MATERIAL
	GL	GLASS
	GND	GROUND, GROUND CONNECTOR
	GPH	GALLONS PER HOUR
	GPM	GALLONS PER MINUTE
	GR	GRILLE
	GRV	GRAVITY VENT
	GS	GAS SENSOR
	GV	GATE VALVE
	GW	GLYCOL WASTE
	GWB	GPYSUM WALLBOARD
	GWH	GAS WATER HEATER
H	H	HUMIDISTAT
	HAZMAT	HAZARDOUS MATERIALS
	HB	HOSE BIBB
	HC	HEATING COIL
	HCS	HOST COMPUTER ROOM
	HDW	HARDWARE
	HE	HEAT EXCHANGER
	HERM	HERMETIC
	HM	HOLLOW METAL
	HORIZ	HORIZONTAL
	HP	HORSE POWER, HEAT PUMP, HIGH PRESSURE
	HPL	HIGH PRESSURE LAMINATE
	HPS	HIGH PRESSURE SODIUM, HIGH PRESSURE STEAM
	HPT	HIGH POINT
	HR	HOUR
	HS	HIGH STRENGTH, HUMIDITY SENSOR
	HT	HEIGHT
	HTG	HEATING
	HTP	HOT TAP (W/ STOPPLE FITTING)
	HTR	HEATER
	HU	HUMIDIFIER
	HVAC	HEATING/VENTILATING/AIR CONDITIONING
	HW	DOMESTIC HOT WATER
	HWL	HIGH WATER LEVEL
	HWR	HOT WATER RETURN
	HWS	HOT WATER SUPPLY
	HZ	HERTZ
	HWY	HIGHWAY
I	IBC	INTERNATIONAL BUILDING CODE
	ID	INSIDE DIAMETER
	IEWH	INSTANTANEOUS ELECTRIC WATER HEATER
	IF	INSIDE FACE, INTERNAL FILTER
	IN, "	INCH
	INST	INSTRUMENTATION
	INSUL	INSULATION
	INT	INTERIOR
	INT'L	INTERNATIONAL
	INV	INVERT
	ITEA	INFORMATION TECHNOLOGY EQUIPMENT AREA
	ITER	INFORMATION TECHNOLOGY EQUIPMENT ROOM
J	J	JUNCTION
	JB	JUNCTION BOX
	JC	JANITOR'S CLOSET
K	KCMIL	THOUSAND CIRCULAR MILS
	KVA	KILOVOLT AMPERE
	KW	KILOWATTS
L	LAN	LOCAL AREA NETWORK
	LBS, #	POUNDS
	LCC	LEAD CONTAINING COATING
	LCP	LOCAL CONTROL PANEL
	LCV	LEVEL CONTROL VALVE
	LF	LINEAR FEET
	LG	LEVEL GAUGE
	LL	LIVE LOAD
	LLH	LONG LEG HORIZONTAL
	LLV	LONG LEG VERTICAL
	LONG	LONGITUDINAL
	LP	LOW POINT
	LPS	LOW PRESSURE STEAM
	LS	LEVEL SWITCH
	LT	LIGHT
	LTG	LIGHTING
M	M	MOTOR
	MAS	MASONRY
	MAT	MATERIAL
	MAX	MAXIMUM
	MCC	MOTOR CONTROL CENTER
	MECH	MECHANICAL
	MET	METAL
	MFG(R)	MANUFACTURER
	MG	MOTOR GENERATOR
	MIL	MILLIMETER
	MIN	MINIMUM
	MO	MASONRY OPENING
	MOD	MODIFICATION
	MS	MOISTURE SENSOR
	MTG	MOUNTING, MOUNTED
N	N/A	NOT APPLICABLE
	NAM	NEGATIVE AIR MACHINE
	NARACS	NATIONAL RADIO COMMUNICATIONS SYSTEM
	NFPA	NATIONAL FIRE PROTECTION ASSOCIATION
	NIC	NOT IN CONTRACT
	NO, #	NUMBER
	NOM	NOMINAL
	NPT	NATIONAL PIPE THREAD
	NTS	NOT TO SCALE
O	OA	OUTSIDE AIR
	OC	ON CENTER
	OD	OUTSIDE DIAMETER, OPEN DRAIN
	OF	OUTSIDE FACE
	OFD	OVERFLOW ROOF DRAIN
	OH	OPPOSITE HAND
	OPNG	OPENING
	OPP	OPPOSITE
	OSHA	OCCUPATIONAL SAFETY & HEALTH ADMINISTRATION
	OSW	OPERATIONS SUPPORT WING
P	P	PUMP, PHASE, POLE
	PACM	PRESSUMED ASBESTOS CONTAINING MATERIAL
	PBX	PRIVATE BRANCH EXCHANGE
	PC	PRESSURE CONTROL SWITCH
	PCB	POLYCHLORINATED BIPHENYLS
	PCF	POUNDS PER CUBIC FOOT
	PD	PRESSURE DIFFERENTIAL
	PDI	PRESSURE DIFFERENTIAL INDICATOR
	PDS	PRESSURE DIFFERENTIAL SENSOR
	PH	PHASE
	PHC	PREHEAT COIL
	PI	POINT OF INTERSECTION, PRESSURE INDICATOR
	PIV	POST INDICATOR VALVE
	PL	PROPERTY LINE, PLATE
	PLAM	PLASTIC LAMINATE
	PLF	POUNDS PER LINEAR FOOT
	PNL	PANEL
	POC	POINT OF CONNECTION
	PRV	PRESSURE REDUCING VALVE
	PS	PRESSURE SENSOR
	PSF	POUNDS PER SQUARE FOOT
	PSI	POUNDS PER SQUARE INCH
	PSM	POWER SYSTEMS MODIFICATION
	PT	PAINT, POINT OF TANGENCY
	PTVC	POINT OF VERTICAL CURVATURE
	PVC	POLYVINYL CHLORIDE
	PVDS	PORTABLE VISUAL DISPLAY SYSTEM
	PVI	POINT OF VERTICAL INTERSECTION
	PVMT	PAVEMENT
	PVT	POINT OF VERTICAL TANGENCY
R	R	RISER, RADIUS
	RA	RETURN AIR
	RAD	RADIUS
	RCP	REFLECTED CEILING PLAN
	RCRA	RESOURCE CONSERVATION AND RECOVERY ACT
	RD	ROOF DRAIN
	RECEPT, RPTS	RECEPTACLE
	REF	REFERENCE
	REG	REGISTER
	REINF	REINFORCING
	REQ'D	REQUIRED
	REV	REVERSE, REVISION
	RF	RETURN FAN
	RGS	RIGID GALVANIZED STEEL
	RHC	REHEAT COIL
	RM	ROOM
	RO	ROUGH OPENING
	RV	REFRIGERANT VENT
S	S	SMOKE DETECTOR
	SA	SUPPLY AIR
	SAN	SANITARY
	SAP	SOUND ABSORBING PANEL
	SCH, SCHED	SCHEDULE
	SCWD	SOLID CORE WOOD
	SD	SMOKE DAMPER
	SEC	SECTION
	SF	SUPPLY FAN, SQUARE FEET
	SHT	SHEET
	SIG	SIGNAL
	SIM	SIMILAR
	SM	SPRINKLER MAIN
	SP	SUMP PUMP/SEWAGE PUMP, STATIC PRESSURE INDICATOR
	SPEC	SPECIFICATIONS
	SQ	SQUARE
	SRF	SAFETY RUBBER FLOOR TILE
	SRGG	SIGNAL REFERENCE GROUND GRID
	SRS	SIGNAL REFERENCE STRUCTURE
	SSDI	SECURITY SYSTEMS DESIGN AND INTEGRATION
	SSTL, SS	STAINLESS STEEL
	ST	STEAM, STREET
	STA	STATION
	STC	SOUND TRANSMISSION CLASS
	STD	STANDARD
	STE	STANDARD TAPERED END
	STGP	SIGNAL TRANSPORT GROUND PLANE
	STL	STEEL
	STOR	STORAGE
	STRUC	STRUCTURAL, STRUCTURE
	SUCT	SUCTION
	SUSP	SUSPENDED
	SW	SWITCH
	SYM	SYMMETRICAL
T	T	THERMOSTAT, TREAD
	TBD	TO BE DETERMINED
	T&B	TOP AND BOTTOM
	T&G	TONGUE AND GROOVE
	TC	TEMPERATURE CONTROL SWITCH
	TELCO	TELECOMMUNICATION, TELEPHONE COMPANY LINE
	TEMP	TEMPERATURE
	TI	TEMPERATURE INDICATOR
	TIC	TEMPERATURE INDICATING CONTROLLER
	TK	TANK
	TM&O	TELECOMMUNICATIONS MANAGEMENT AND OPERATIONS
	TOC	TOP OF CONCRETE
	TOS	TOP OF STEEL
	TOW	TOP OF WALL
	TRACON	TERMINAL RADAR APPROACH CONTROL FACILITY
	TRANS	TRANSVERSE
	TS	TEMPERATURE SENSOR, TAMPER SWITCH
	TYP	TYPICAL
U	UBC	UNIFORM BUILDING CODE
	UH	UNIT HEATER
	UL	UNDERWRITER'S LABORATORIES, INC.
	UON	UNLESS OTHERWISE NOTED
	UPS	UNINTERRUPTIBLE POWER SYSTEM
	UTIL	UTILITY
	UV	UNIT VENTILATOR
V	V	VOLT
	VAT	VINYL ASBESTOS TILE
	VAV	VARIABLE VOLUME TERMINAL
	VB	VINYL BASE
	VBT	VINYL BASE & TRIM COMPONENTS
	VC	VERTICAL CURVE
	VCT	VINYL COMPOSITION TILE
	VD	VOLUME DAMPER
	VERT	VERTICAL
	VF	VERTICAL FEET, VENTILATION FAN
	VFD	VARIABLE FREQUENCY DRIVE
	VGWB	VINYL SURFACED GYPSUM WALL BOARD
	VIF	VERIFY IN FIELD
	VORTAC	VHF OMNIDIRECTIONAL RANGE TACTICAL AIR NAVIGATION
	VP	VELOCITY PRESSURE, VACUUM PRODUCER
	VS	VIBRATION SWITCH
W	W	WATT
	W/	WITH
	WD	WOOD
	WG	WATER GAGE
	WJHTC	WILLIAM J. HUGHES TECHNICAL CENTER
	W/O	WITHOUT
	WP	WEATHERPROOF
	WT	WEIGHT
X	XFER, XFR	TRANSFER
	XFMR	TRANSFORMER
Y	Y	WYE CONNECTION
	YD	YARD

FOR OFFICIAL USE ONLY

PUBLIC AVAILABILITY TO BE DETERMINED UNDER 5 USC 552

JACOBS
1100 N GLEBE RD.
SUITE 500
ARLINGTON, VA 22201

REV.	APPROVED DATE	DESCRIPTION	JCN	REDLINE DATE	APVD

COMMONWEALTH OF VIRGINIA
WILLIAM MICHAEL STEVENS
Lic. No. 3409
09/12/25
ARCHITECT

Jacobs

DEPARTMENT OF TRANSPORTATION
FEDERAL AVIATION ADMINISTRATION
CENTRAL SERVICE REGION — FT WORTH, TX

LEEVILLE (LEV) VORTAC REPLACEMENT

GENERAL ABBREVIATIONS

GRAND ISLE — LEEVILLE (LEV) VORTAC — LA

REVIEWED BY | SUBMITTED BY | APPROVED BY
SUBMITTER'S TITLE | APPROVER'S TITLE

LEEVILLE VORTAC
GRAND ISLE
LOUISIANA

DESIGNED BY J HALEC
DRAWN BY J HALEC
CHECKED BY W. STEVENS

ISSUED BY: ENGINEERING SERVICES TERMINAL

DATE 9/12/2025 | JCN: 1508914
DRAWING NO. LEV - D - VORTAC - G003 | REV.

PLOT DATE/TIME: 9/11/2025 11:04:16 AM

GENERAL CONSTRUCTION STAGING NOTES

CONSTRUCTION SEQUENCE

DEVELOP RISK MITIGATION PLAN TO ACCOMMODATE REMOVING AND PROVIDING EQUIPMENT AS PART OF THE WORK. COORDINATE FINAL PLAN REQUIREMENTS WITH COR. RISK MITIGATION PLAN MUST AT A MINIMUM ADDRESS PROTECTION OF ENVIRONMENTALLY SENSITIVE AREAS AND WETLANDS.

RISK MITIGATION PLAN MUST IDENTIFY AND DOCUMENT RISKS/HAZARDS POSED BY THE WORK AND IDENTIFY ACTION REQUIRED TO REDUCE THE RISK. THE PLAN MUST INCLUDE DAILY CONSTRUCTION BRIEFINGS WITH THE COR AND REGULAR INSPECTIONS.

GENERAL

A. CONTRACTOR PARKING
   A.1. LIMITED ONSITE PARKING ON-SITE IS AVAILABLE AND MUST BE COORDINATED WITH COR PRIOR TO ANY CONSTRUCTION.

B. CONSTRUCTION MATERIAL STORAGE

   B.1. PROVIDE ON SITE AND OFF-SITE CONSTRUCTION STORAGE AND STAGING AREAS.

   B.2. STORAGE OF CONSTRUCTION MATERIALS AND TRAILERS ON SITE IS LIMITED TO THE CONSTRUCTION STAGING AREA. MATERIALS MUST BE NEATLY STORED AND PROTECTED. DO NOT DIG WITHOUT PRIOR PERMISSION FROM COR.

   B.3. ANY FLUID SPILLS MUST BE IMMEDIATELY CONTAINED AND PROPERLY CLEANED UP AND DISPOSED OF. AT PROJECT COMPLETION, ANY SPILLS, OR OTHER DEBRIS MUST BE PROPERLY REMOVED AND DISPOSED OF AND AREA RETURNED TO PRE-CONSTRUCTION CONDITIONS.

C. CONSTRUCTION DEBRIS

   C.1. PROVIDE ENCLOSED DUMPSTERS FOR DISPOSAL OF CONSTRUCTION DEBRIS. AREAS AROUND DUMPSTERS MUST BE KEPT CLEAN AND FREE OF EXCESS DEBRIS AND DUST DURING CONSTRUCTION. DEBRIS MUST BE REMOVED DAILY. PROVIDE SEPARATE DUMPSTER, IF REQUIRED, FOR ABATEMENT MATERIAL. QUANTITY AND POSITION OF DUMPSTERS MUST BE COORDINATED WITH THE COR PRIOR TO THEIR DELIVERY AND PLACEMENT.

D. CONSTRUCTION TOILET FACILITIES

   D.1. PROVIDE ONE PORTABLE CHEMICAL TOILET PER EVERY 20 WORKERS AT THE TEMPORARY CONSTRUCTION STAGING AREA. COORDINATE WITH THE COR FOR SCHEDULING OF SERVICE.

   D.2. PROVIDE ONE PORTABLE HAND WASHING STATION PER EVERY 20 WORKERS AT THE TEMPORARY CONSTRUCTION STAGING AREA. COORDINATE WITH THE COR FOR SCHEDULING OF SERVICE.

FOR OFFICIAL USE ONLY
PUBLIC AVAILABILITY TO BE DETERMINED UNDER 5 USC 552

COMMONWEALTH OF VIRGINIA
MARCO PADILLA CACERES
Lic. No. 65289
9/12/2025
PROFESSIONAL ENGINEER

JACOBS
1100 N GLEBE RD.
SUITE 500
ARLINGTON, VA 22201

REV.	APPROVED DATE	DESCRIPTION	JCN	REDLINE DATE	APVD

Jacobs

DEPARTMENT OF TRANSPORTATION
FEDERAL AVIATION ADMINISTRATION
CENTRAL SERVICE REGION — FT WORTH, TX

LEEVILLE (LEV) VORTAC REPLACEMENT

CONSTRUCTION STAGING NOTES

GRAND ISLE — LEEVILLE (LEV) VORTAC — LA

REVIEWED BY | SUBMITTED BY | APPROVED BY
SUBMITTER'S TITLE | APPROVER'S TITLE

LEEVILLE VORTAC
GRAND ISLE LOUISIANA

DESIGNED BY S.BUTLER
DRAWN BY S.BUTLER
CHECKED BY S. DAVIS
ISSUED BY ENGINEERING SERVICES TERMINAL
DATE 9/12/2025 JCN: 1508914
DRAWING NO. LEV - D - VORTAC - G004
REV.

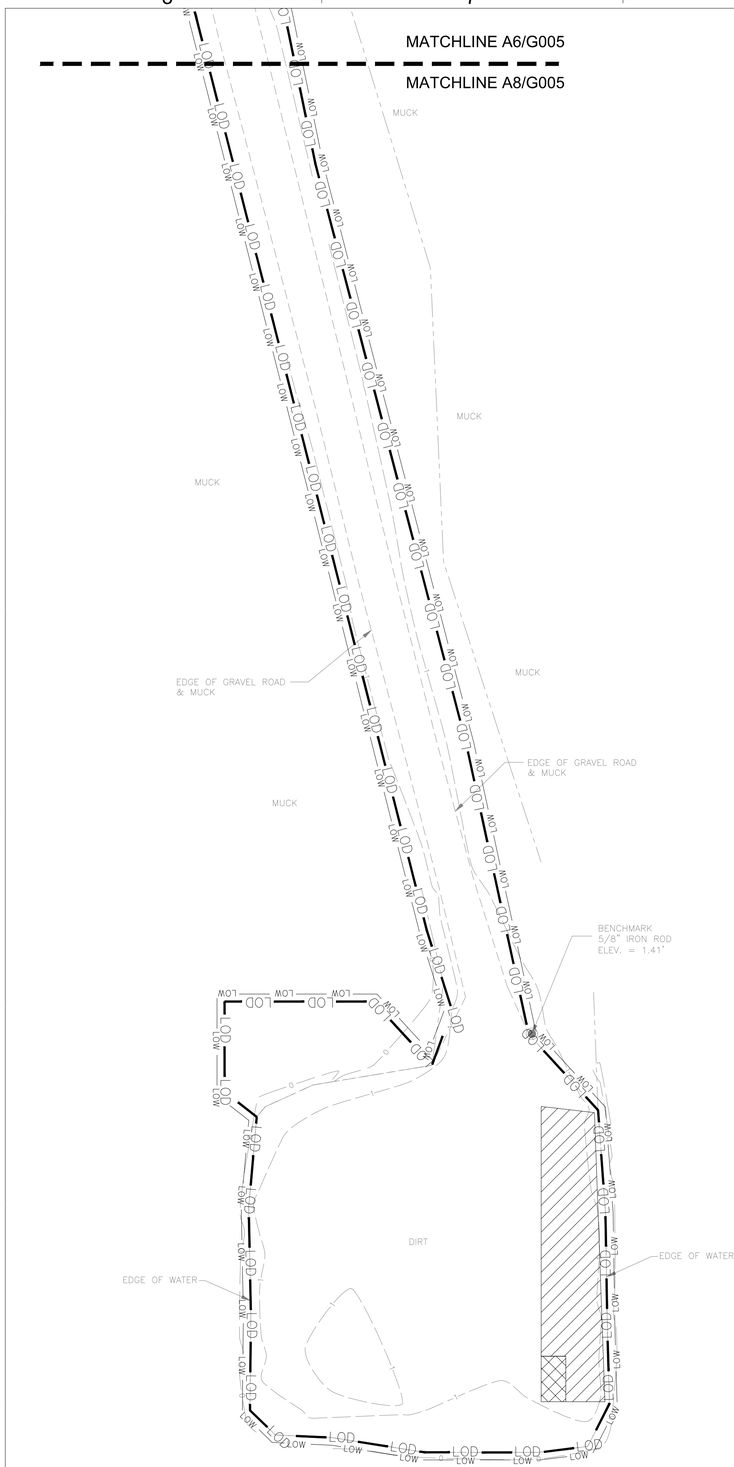

A8 G005 CONSTRUCTION STAGING PLAN

1" = 20'

0 10 20 40 FEET

Scale: 1 INCH = 20 FEET

N

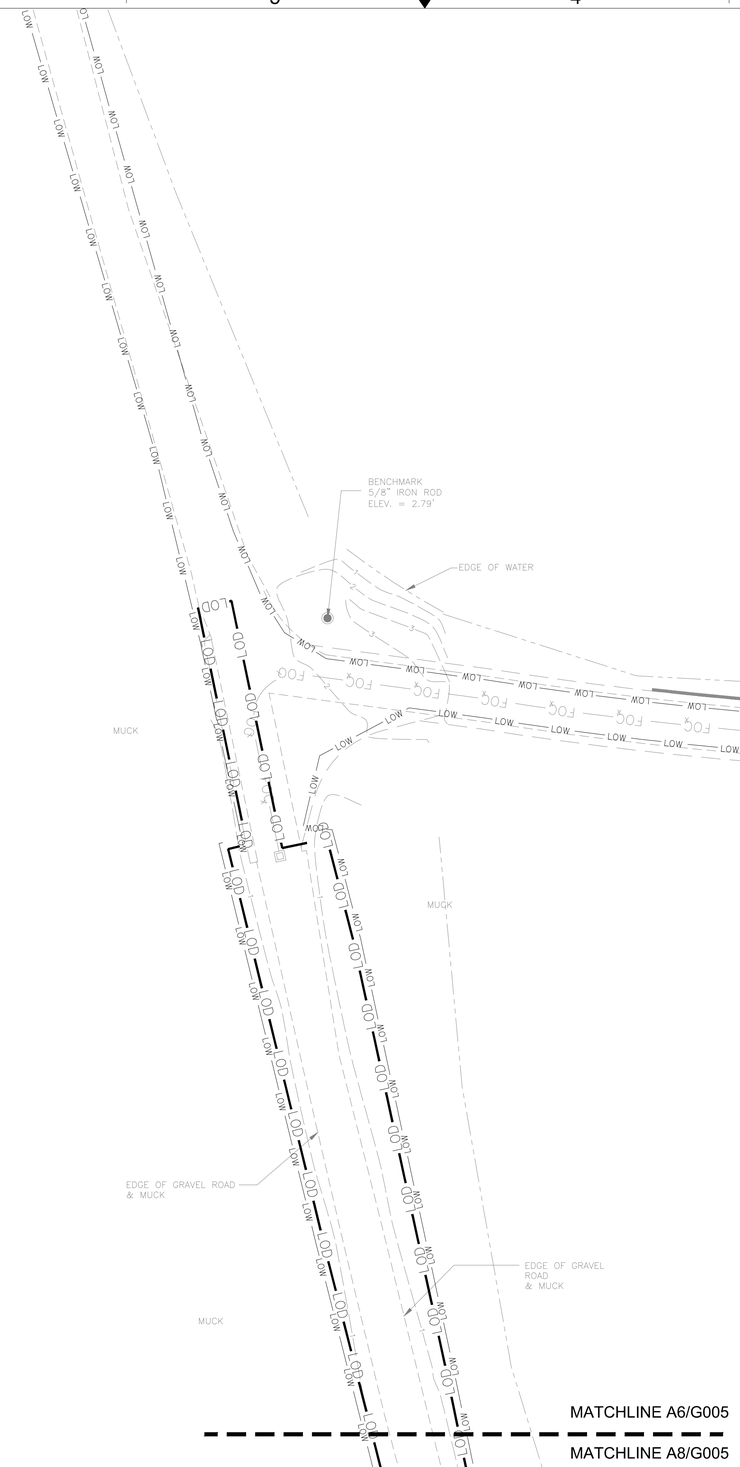

A6 G005 CONSTRUCTION STAGING PLAN

1" = 20'

0 10 20 40 FEET

Scale: 1 INCH = 20 FEET

N

GENERAL SHEET NOTES

A. REFER SHEET C001 FOR CIVIL LINETYPE LEGEND AND ABBREVIATIONS.

HATCH LEGEND

CONSTRUCTION STAGING AREA

PORTABLE ELECTRIC GENERATOR

KEY MAP

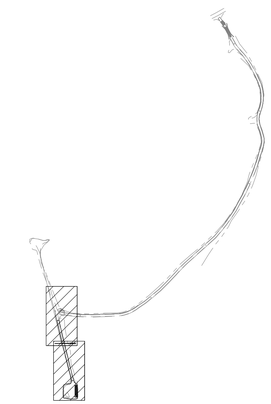

N

FOR OFFICIAL USE ONLY

PUBLIC AVAILABILITY TO BE DETERMINED UNDER 5 USC 552

COMMONWEALTH OF VIRGINIA
MARCO PADILLA CACERES
Lic. No. 65289
9/12/2025
PROFESSIONAL ENGINEER

JACOBS
1100 N GLEBE RD.
SUITE 500
ARLINGTON, VA 22201

REV.	APPROVED DATE	DESCRIPTION	JCN	REDLINE DATE	APVD

Jacobs

DEPARTMENT OF TRANSPORTATION

FEDERAL AVIATION ADMINISTRATION

CENTRAL SERVICE REGION — FT WORTH, TX

LEEVILLE (LEV) VORTAC REPLACEMENT

CONSTRUCTION STAGING PLAN

GRAND ISLE — LEEVILLE (LEV) VORTAC — LA

REVIEWED BY	SUBMITTED BY	APPROVED BY
	SUBMITTER'S TITLE	APPROVER'S TITLE

LEEVILLE VORTAC

GRAND ISLE LOUISIANA

DESIGNED BY S.BUTLER
DRAWN BY S.BUTLER
CHECKED BY S. DAVIS

ISSUED BY ENGINEERING SERVICES TERMINAL

DATE 9/12/2025 JCN: 1508914

DRAWING NO. LEV - D - VORTAC - G005 REV.

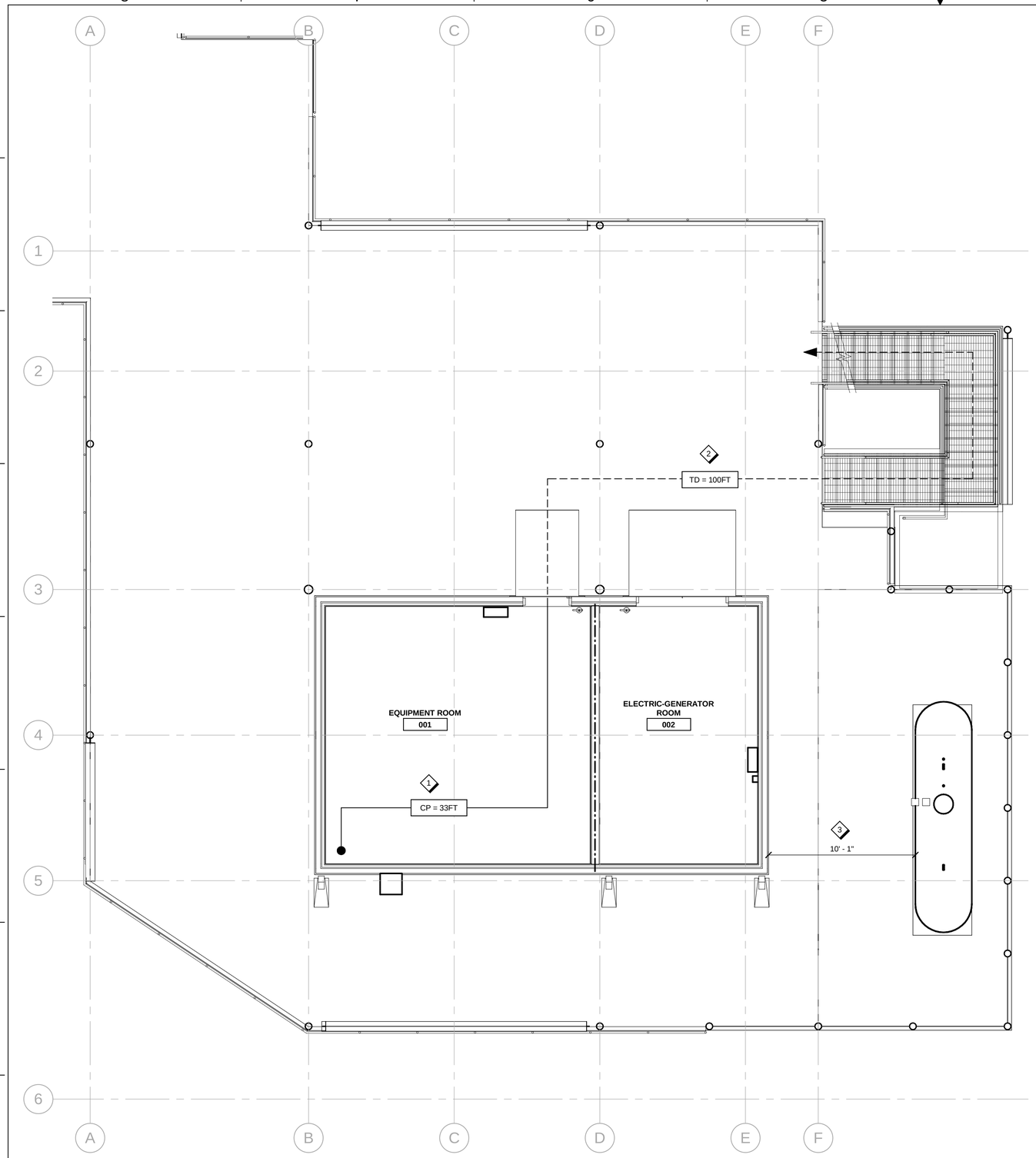

LIFE SAFETY CODE ANALYSIS

A. REFER TO SHEET G-002 FOR LIST OF APPLICABLE CODES AND STANDARDS, AND DETAILS ON BUILDING CONSTRUCTION.

B. INDUSTRIAL OCCUPANCY (NEW, NONSPRINKLERED)
   a. MAX TRAVEL DISTANCE 200 FEET
   b. MAX COMMON PATH OF TRAVEL 50 FEET
   c. MAX DEAD END 50 FEET

C. OPEN STRUCTURE (NFPA 101, SECTION 11.2)
   a. MAX TRAVEL DISTANCE (SINGLE EXIT): 200 FEET

SHEET NOTES

1. EGRESS REQUIREMENTS FOR EQUIPMENT ENCLOSURE ARE DESIGNED TO COMPLY WITH NFPA 101, CHAPTER 40 FOR SPECIAL-PURPOSE INDUSTRIAL OCCUPANCIES.
2. EGRESS REQUIREMENTS FOR THE OPEN ELEVATED PLATFORM ONCE OCCUPANTS HAVE EXITED THE BUILDING ENCLOSURE ARE DESIGNED TO COMPLY WITH NFPA 101, SECTION 11.2 FOR OPEN STRUCTURES, WHICH ALLOW FOR A SINGLE MEANS OF EGRESS WITHIN 200 FEET FOR STRUCUTRES OCCUPIED BY 3 OR FEWER PERSONS.
3. 1000 GALLON PROPANE STORAGE TANK. SEPARATION DISTANCE REQUIREMENTS TO THE FACILITY DO NOT APPLY BASED ON NFPA 58 DEFINITION OF "NEAREST IMPORTANT BUILDING".

LIFE SAFETY SYMBOLS:

OCCUPANT LOAD:

- TD = #FT — TRAVEL DISTANCE (MAX: 200 FT)
- CP = #FT — COMMON PATH OF TRAVEL (MAX: 50 FT)
- 1-HOUR FIRE RATED BARRIER

EXIT CAPACITY:

W / X / Y / Z

W = EXIT CAPACITY FACTOR (IN/PERSON)
X = OCCUPANTS USING EXIT (PERSONS)
Y = EXIT CAPACITY (PERSONS)
Z = EXIT CLEAR WIDTH (IN)

OCCUPANT LOAD TABLE

#	ROOM NAME	AREA (SQ. FT)	OCCUPANCY	LOAD FACTOR (SQ. FT/OCC)	OCC. LOAD
001	EQUIPMENT ROOM	320	STORAGE	500	1
002	GENERATOR ROOM	191	STORAGE	500	1
	TOTAL				2

FOR OFFICIAL USE ONLY
PUBLIC AVAILABILITY TO BE DETERMINED UNDER 5 USC 552

A8 G101 **LIFE SAFETY PLAN**
1/4" = 1'-0"

SCALE: 1/4"=1'-0"

PLOT DATE/TIME: 9/8/2025 10:26:41 AM

JACOBS
1100 N GLEBE RD.
SUITE 500
ARLINGTON, VA 22201

REV.	APPROVED DATE	DESCRIPTION	JCN	REDLINE DATE	APVD

STATE OF MARYLAND — JACOB I WATKINS — 44038 — PROFESSIONAL ENGINEER — 09/12/25

DEPARTMENT OF TRANSPORTATION
FEDERAL AVIATION ADMINISTRATION
CENTRAL SERVICE REGION — FT WORTH, TX

LEV - VOR
LEEVILLE PBN VORTAC REPLACEMENT

LIFE SAFETY PLAN

GRAND ISLE — LEEVILLE (LEV) VORTAC — LA

REVIEWED BY | SUBMITTED BY | APPROVED BY
SUBMITTER'S TITLE | APPROVER'S TITLE

LEEVILLE VORTAC
GRAND ISLE LOUISIANA

DESIGNED BY: J. WATKINS
DRAWN BY: J. WATKINS
CHECKED BY: E. SNIDER
ISSUED BY: ENGINEERING SERVICES TERMINAL
DATE: 09/12/2025 | JCN: 1508914
DRAWING NO.: LEV - D - VORTAC - G101 | REV.

GENERAL CONSTRUCTION NOTES

1. OBTAIN WRITTEN APPROVAL FROM THE COR FOR DEVIATIONS FROM THESE DOCUMENTS.

2. PERFORM WORK IN ACCORDANCE WITH APPLICABLE FEDERAL, STATE, AND LOCAL LAWS AND ORDINANCES. NOTIFY THE COR IMMEDIATELY IF THERE IS CONFLICT BETWEEN THE APPLICABLE ORDINANCES AND THE CONTRACT WORK.

3. STAGING AND LAYDOWN AREA WILL BE COORDINATED DURING THE PRE-CONSTRUCTION MEETING.

4. USE ESTABLISHED ROADWAYS AND OBSERVE APPLICABLE WEIGHT RESTRICTIONS FOR VEHICLES AND/OR ROADWAYS.

5. MAINTAIN TRAFFIC AND USAGE OF THE EXISTING ROADWAYS ADJACENT TO THE PROJECT. SUBMIT A TRAFFIC CONTROL PLAN TO THE COR A MINIMUM OF 30 DAYS PRIOR TO PROPOSED LANE CLOSURES OR WORK WITHIN THE EXISTING ROADWAYS. MAINTAIN EMERGENCY VEHICLE ACCESS AND ROUTES AT ALL TIMES FOR THE DURATION OF THE PROJECT.

6. PROVIDE TRAFFIC CONTROL DEVICES IN ACCORDANCE WITH THE LATEST MANUAL ON UNIFORM TRAFFIC CONTROL DEVICES (MUTCD) REQUIREMENTS AND ANY LOCAL REQUIREMENTS.

7. DESIGN TEMPORARY CONSTRUCTION STRUCTURES SUCH AS SHEETING AND SHORING FOR EXCAVATIONS. PROVIDE DESIGN CALCULATIONS AND DRAWINGS SHOWING THE LOCATIONS AND CONSTRUCTION DETAILS OF SAID TEMPORARY STRUCTURES PROPOSED. DOCUMENTS MUST BE PREPARED AND SEALED BY A PROFESSIONAL ENGINEER REGISTERED IN LOUISIANA.

8. NO DISTURBANCE IS ALLOWED BEYOND THE LIMITS OF DISTURBANCE INDICATED.

9. DISTURBANCE OUTSIDE OF THE EXISTING GRAVEL ARE CONSIDERED IMPACTS TO WETLANDS.

10. MAXIMUM SLOPE OF DISTURBED AND RESTORED AREAS IS 3:1.

11. UPON COMPLETION OF CONSTRUCTION OF THE PROJECT, THE PROJECT AREA MUST BE FREE OF DEBRIS AND UNUSED MATERIAL. DAMAGED CAUSED BY CONSTRUCTION ACTIVITIES MUST BE RESTORED TO MEET OR EXCEED THE ORIGINAL EXISTING CONDITION TO THE SATISFACTION OF THE COR AT NO ADDITIONAL COST TO THE GOVERNMENT.

CIVIL ABBREVIATIONS

A	
AC	ACRES
ASPH	ASPHALT
C	
CF	CUBIC FOOT
E	
E	EASTING
EMH	ELECTRICAL MANHOLE
ETR	EXISTING TO REMAIN
EX	EXISTING
F	
FD	FOUNDATION DRAIN
FOUN	FOUNDATION
FO	FIBER OPTIC LINE
FOC	FIBER OPTIC CONDUIT
H	
HP	HIGH POINT
L	
LAT	LATERAL
LOD	LIMITS OF DISTURBANCE
M	
MG	MATCH EXISTING GRADE
N	
N	NORTHING
P	
PROP	PROPOSED
S	
SW	SIDEWALK
SQFT	SQUARE FOOT
T	
TP#	TEST PIT
TS	TOP OF SLAB
U	
UNDG	UNDERGROUND
UNK	UNKNOWN
V	
VP	VIEWPORT

DEMOLITION LEGEND

	EXISTING	PROPOSED
MAT FOUNDATION		
UNDERGROUND ELECTRIC	UGEx	UGE
UNDERGROUND TELECOMMUNICATION		UGT
FIBER OPTIC	FOx	FO FO
FIBER OPTIC CONDUIT	FOCx FOCx	
FIBER OPTIC CONDUIT VAULT		
LIMITS OF WORK (LOW)		LOW LOW
LIMITS OF DISTURBANCE (LOD)		LOD LOD
EDGE OF GRAVEL AND GRAVEL ROAD		
EDGE OF GRAVEL SHOULDER		
EDGE OF WATER		
EDGE OF ASPHALT PAVEMENT		
SILT FENCE		X
CONSTRUCTION ENTRANCE		
CONCRETE		
CONTOUR	1 1	1
RETAINING WALL		

DEMOLITION PLAN LEGEND

- LIMITS OF FIBER OPTIC REMOVAL
- LIMITS OF UNDERGROUND POWER REMOVAL
- LIMITS DEMOLITION FOR UTILITY INSTALLATION

SITE PLAN LEGEND

- CONCRETE FOUNDATION PAD, SEE STRUCTURAL PLANS FOR DETAILS
- FULL DEPTH GRAVEL ACCESS ROAD
- GRAVEL RESURFACING
- SLOPE STABILITY BLANKET
- RIPRAP

UTILITY PLAN LEGEND

- LIMITS OF DIRECTIONAL BORING

FOR OFFICIAL USE ONLY
PUBLIC AVAILABILITY TO BE DETERMINED UNDER 5 USC 552

COMMONWEALTH OF VIRGINIA
MARCO PADILLA CACERES
Lic. No. 65289
9/12/2025
PROFESSIONAL ENGINEER

JACOBS
1100 N GLEBE RD.
SUITE 500
ARLINGTON, VA 22201

REV.	APPROVED DATE	DESCRIPTION	JCN	REDLINE DATE	APVD

Jacobs

DEPARTMENT OF TRANSPORTATION
FEDERAL AVIATION ADMINISTRATION
CENTRAL SERVICE REGION — FT WORTH, TX

LEEVILLE (LEV) VORTAC REPLACEMENT

GENERAL NOTES, LEGEND, AND ABBREVIATIONS

GRAND ISLE — LEEVILLE (LEV) VORTAC — LA

REVIEWED BY | SUBMITTED BY | APPROVED BY
SUBMITTER'S TITLE | APPROVER'S TITLE

LEEVILLE VORTAC
GRAND ISLE LOUISIANA

DESIGNED BY S.BUTLER
DRAWN BY S.BUTLER
CHECKED BY S. DAVIS
ISSUED BY ENGINEERING SERVICES TERMINAL
DATE 9/12/2025 JCN: 1508914
DRAWING NO. LEV - D - VORTAC - C001
REV.

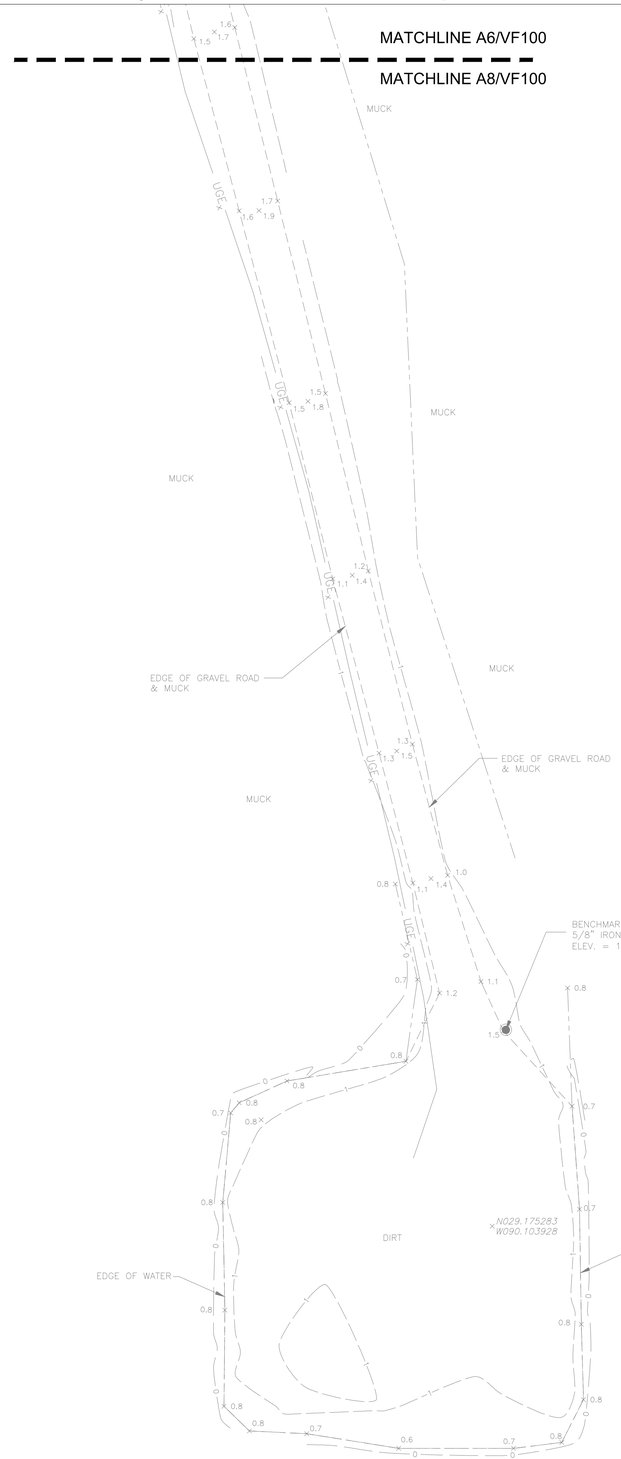

A8 VF100 EXISTING CONDITIONS PLAN

1" = 20'

0 10 20 40 FEET

Scale: 1 INCH = 20 FEET

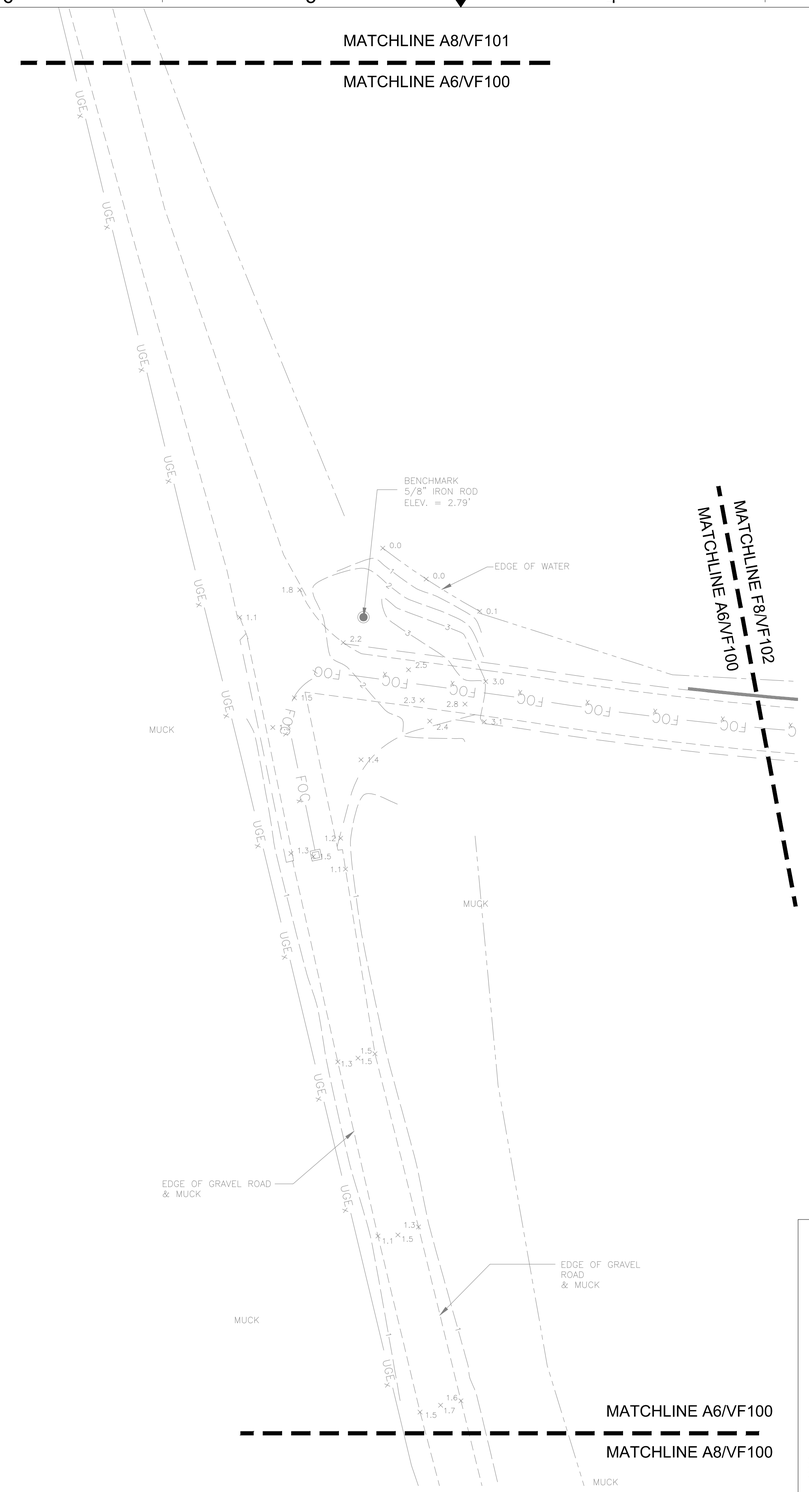

A6 VF100 EXISTING CONDITIONS PLAN

1" = 20'

0 10 20 40 FEET

Scale: 1 INCH = 20 FEET

SURVEY NOTES

A. PROPERTY OWNER: BOUZIGARD, TEENA MARIE PLAISANCE & OTHERS WITH PARCEL ID OF 0102565900.

B. VERTICAL DATUM: NORTH AMERICAN VERTICAL DATUM 1988.

C. MERIDIAN AND COORDINATES REFER TO LOUISIANA STATE PLANE, NAD N83, LOUISIANA SOUTH ZONE AND ARE BASED ON GPS OBSERVATIONS. OBTAINED BY LOUISIANA STATE UNIVERSITY ENGINEERING DEPARTMENT. WITH C4GNET.XYZ REAL-TIME NETWORK RTCM3.2 RTK.

D. THIS PLAN IS BASED UPON SURVEY INFORMATION PROVIDED BY A FIELD SURVEY PREPARED BY TECTONIC ENGINEERING CONSULTANTS AND GEOLOGISTS & AND LAND SURVEYORS COMPLETED ON 11/27/2023 AND OTHER REFERENCE MATERIALS LISTED BELOW.

E. EXISTING UNDERGROUND UTILITIES WERE NOT LOCATED IN THE FIELD BY THIS SURVEY.

F. THE SITE FALLS WITHIN FLOOD ZONE "A13" WITH A BASE FLOOD ELEVATION OF 11' AS PER THE NATIONAL FLOOD INSURANCE RATE MAP FOR THE LAFOURSHE PARISH, STATE OF LOUISIANA, COMMUNITY PANEL NO # 225202-0850 D, EFFECTIVE DATE OF MAY 4, 1992. THIS DETERMINATION IS BASED ON SCALED MAP LOCATION AND GRAPHIC PLOTTING.

G. WETLANDS HAVE NOT BEEN LOCATED OR SHOWN AS PART OF THIS FIELD SURVEY.

H. REFERENCE: TROPICAL STORM NATE ROAD RECONSTRUCTION ACCESS ROAD IMPROVEMENTS PLANS DATED 05/06/2022.

KEY PLAN

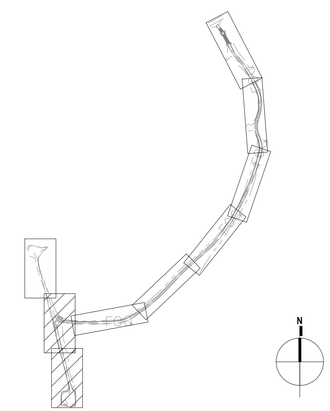

FOR OFFICIAL USE ONLY

PUBLIC AVAILABILITY TO BE DETERMINED UNDER 5 USC 552

COMMONWEALTH OF VIRGINIA
MARCO PADILLA CACERES
Lic. No. 65289
9/12/2025
PROFESSIONAL ENGINEER

JACOBS
1100 N GLEBE RD.
SUITE 500
ARLINGTON, VA 22201

Jacobs

LEEVILLE VORTAC
GRAND ISLE LOUISIANA

REV.	APPROVED DATE	DESCRIPTION	JCN	REDLINE DATE	APVD

DEPARTMENT OF TRANSPORTATION
FEDERAL AVIATION ADMINISTRATION
CENTRAL SERVICE REGION — FT WORTH, TX

LEEVILLE (LEV) VORTAC REPLACEMENT

EXISTING CONDITIONS PLAN

GRAND ISLE — LEEVILLE (LEV) VORTAC — LA

REVIEWED BY	SUBMITTED BY	APPROVED BY
	SUBMITTER'S TITLE	APPROVER'S TITLE

DESIGNED BY S.BUTLER
DRAWN BY S.BUTLER
CHECKED BY S. DAVIS

ISSUED BY ENGINEERING SERVICES TERMINAL

DATE 9/12/2025 JCN: 1508914

DRAWING NO. LEV - D - VORTAC - VF100

REV.

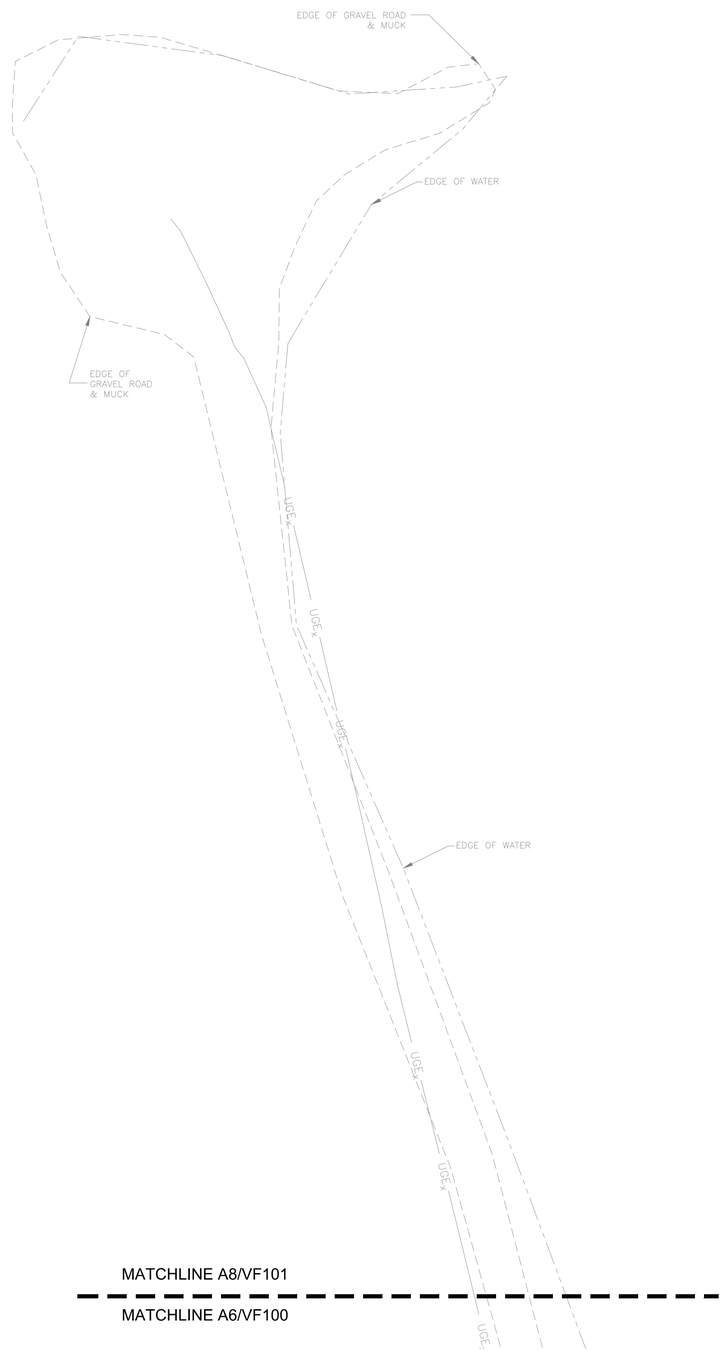

MATCHLINE A8/VF101

MATCHLINE A6/VF100

A8
VF101

EXISTING CONDITIONS PLAN

1" = 20'

0 10 20 40 FEET
Scale: 1 INCH = 20 FEET

N

SURVEY NOTES

A. PROPERTY OWNER: BOUZIGARD, TEENA MARIE PLAISANCE & OTHERS WITH PARCEL ID OF 0102565900.

B. VERTICAL DATUM: NORTH AMERICAN VERTICAL DATUM 1988.

C. MERIDIAN AND COORDINATES REFER TO LOUISIANA STATE PLANE, NAD N83, LOUISIANA SOUTH ZONE AND ARE BASED ON GPS OBSERVATIONS. OBTAINED BY LOUISIANA STATE UNIVERSITY ENGINEERING DEPARTMENT. WITH C4GNET.XYZ REAL-TIME NETWORK RTCM3.2 RTK.

D. THIS PLAN IS BASED UPON SURVEY INFORMATION PROVIDED BY A FIELD SURVEY PREPARED BY TECTONIC ENGINEERING CONSULTANTS AND GEOLOGISTS & AND LAND SURVEYORS COMPLETED ON 11/27/2023 AND OTHER REFERENCE MATERIALS LISTED BELOW.

E. EXISTING UNDERGROUND UTILITIES WERE NOT LOCATED IN THE FIELD BY THIS SURVEY.

F. THE SITE FALLS WITHIN FLOOD ZONE "A13" WITH A BASE FLOOD ELEVATION OF 11' AS PER THE NATIONAL FLOOD INSURANCE RATE MAP FOR THE LAFOURSHE PARISH, STATE OF LOUISIANA, COMMUNITY PANEL NO # 225202-0850 D, EFFECTIVE DATE OF MAY 4, 1992. THIS DETERMINATION IS BASED ON SCALED MAP LOCATION AND GRAPHIC PLOTTING.

G. WETLANDS HAVE NOT BEEN LOCATED OR SHOWN AS PART OF THIS FIELD SURVEY.

H. REFERENCE: TROPICAL STORM NATE ROAD RECONSTRUCTION ACCESS ROAD IMPROVEMENTS PLANS DATED 05/06/2022.

KEY PLAN

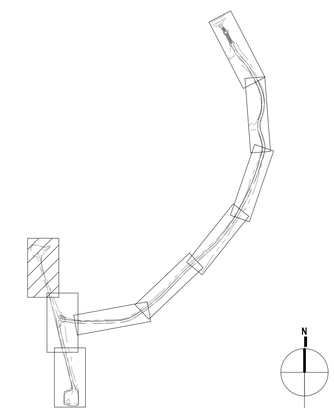

FOR OFFICIAL USE ONLY
PUBLIC AVAILABILITY TO BE DETERMINED UNDER 5 USC 552

COMMONWEALTH OF VIRGINIA
MARCO PADILLA CACERES
Lic. No. 65289
9/12/2025
PROFESSIONAL ENGINEER

JACOBS
1100 N GLEBE RD.
SUITE 500
ARLINGTON, VA 22201

REV.	APPROVED DATE	DESCRIPTION	JCN	REDLINE DATE	APVD

Jacobs

DEPARTMENT OF TRANSPORTATION
FEDERAL AVIATION ADMINISTRATION
CENTRAL SERVICE REGION — FT WORTH, TX

LEEVILLE (LEV) VORTAC REPLACEMENT

EXISTING CONDITIONS PLAN

GRAND ISLE — LEEVILLE (LEV) VORTAC — LA

REVIEWED BY | SUBMITTED BY | APPROVED BY
SUBMITTER'S TITLE | APPROVER'S TITLE

LEEVILLE VORTAC
GRAND ISLE LOUISIANA

DESIGNED BY S.BUTLER
DRAWN BY S.BUTLER
CHECKED BY S. DAVIS

ISSUED BY
ENGINEERING SERVICES TERMINAL

DATE 9/12/2025 JCN: 1508914
DRAWING NO. LEV - D - VORTAC - VF101
REV.

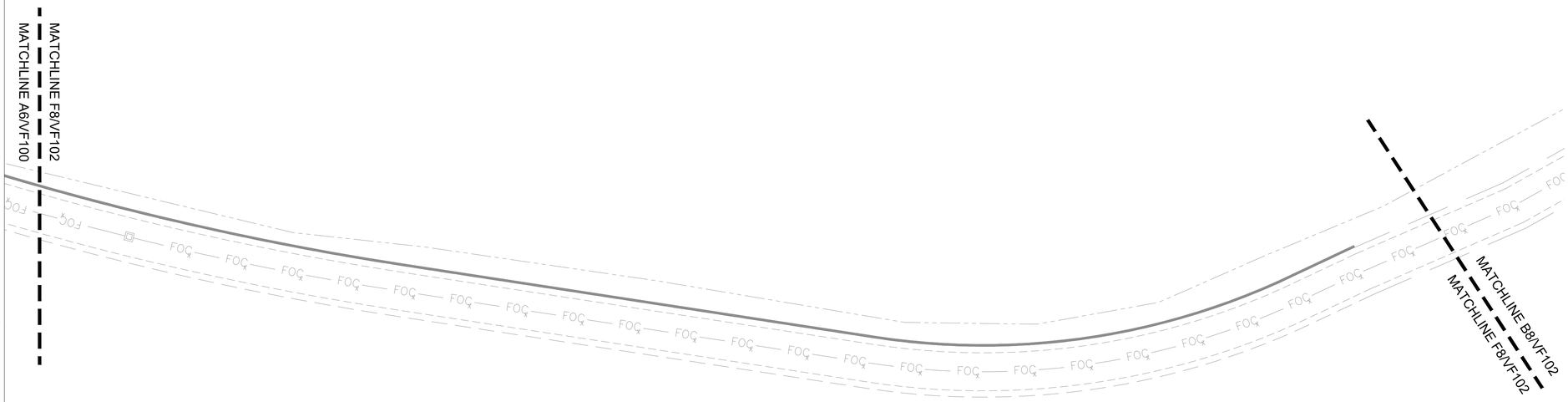

F8 VF102 EXISTING CONDITIONS PLAN

1" = 20'

0 10 20 40 FEET

Scale: 1 INCH = 20 FEET

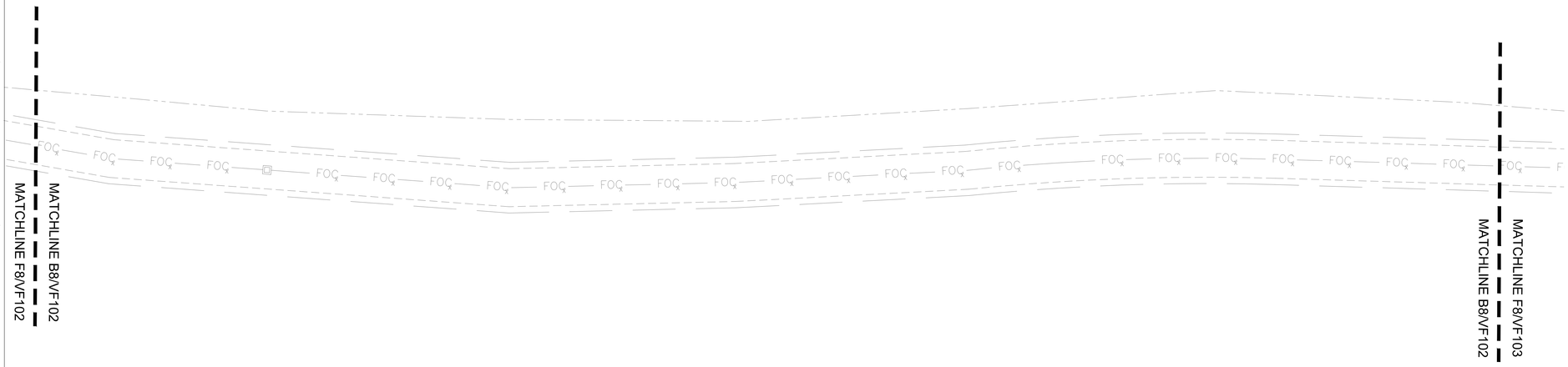

B8 VF102 EXISTING CONDITIONS PLAN

1" = 20'

0 10 20 40 FEET

Scale: 1 INCH = 20 FEET

SURVEY NOTES

A. PROPERTY OWNER: BOUZIGARD, TEENA MARIE PLAISANCE & OTHERS WITH PARCEL ID OF 0102565900.

B. VERTICAL DATUM: NORTH AMERICAN VERTICAL DATUM 1988.

C. MERIDIAN AND COORDINATES REFER TO LOUISIANA STATE PLANE, NAD N83, LOUISIANA SOUTH ZONE AND ARE BASED ON GPS OBSERVATIONS. OBTAINED BY LOUISIANA STATE UNIVERSITY ENGINEERING DEPARTMENT. WITH C4GNET.XYZ REAL-TIME NETWORK RTCM3.2 RTK.

D. THIS PLAN IS BASED UPON SURVEY INFORMATION PROVIDED BY A FIELD SURVEY PREPARED BY TECTONIC ENGINEERING CONSULTANTS AND GEOLOGISTS & AND LAND SURVEYORS COMPLETED ON 11/27/2023 AND OTHER REFERENCE MATERIALS LISTED BELOW.

E. EXISTING UNDERGROUND UTILITIES WERE NOT LOCATED IN THE FIELD BY THIS SURVEY.

F. THE SITE FALLS WITHIN FLOOD ZONE "A13" WITH A BASE FLOOD ELEVATION OF 11' AS PER THE NATIONAL FLOOD INSURANCE RATE MAP FOR THE LAFOURSHE PARISH, STATE OF LOUISIANA, COMMUNITY PANEL NO # 225202-0850 D, EFFECTIVE DATE OF MAY 4, 1992. THIS DETERMINATION IS BASED ON SCALED MAP LOCATION AND GRAPHIC PLOTTING.

G. WETLANDS HAVE NOT BEEN LOCATED OR SHOWN AS PART OF THIS FIELD SURVEY.

H. REFERENCE: TROPICAL STORM NATE ROAD RECONSTRUCTION ACCESS ROAD IMPROVEMENTS PLANS DATED 05/06/2022.

KEY PLAN

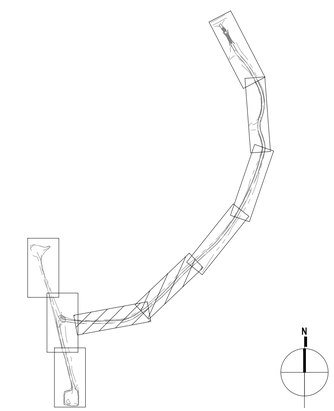

FOR OFFICIAL USE ONLY

PUBLIC AVAILABILITY TO BE DETERMINED UNDER 5 USC 552

COMMONWEALTH OF VIRGINIA
MARCO PADILLA CACERES
Lic. No. 65289
9/12/2025
PROFESSIONAL ENGINEER

JACOBS
1100 N GLEBE RD.
SUITE 500
ARLINGTON, VA 22201

REV.	APPROVED DATE	DESCRIPTION	JCN	REDLINE DATE	APVD

Jacobs

DEPARTMENT OF TRANSPORTATION
FEDERAL AVIATION ADMINISTRATION
CENTRAL SERVICE REGION — FT WORTH, TX

LEEVILLE (LEV) VORTAC REPLACEMENT

EXISTING CONDITIONS PLAN

GRAND ISLE — LEEVILLE (LEV) VORTAC — LA

REVIEWED BY | SUBMITTED BY | APPROVED BY

SUBMITTER'S TITLE | APPROVER'S TITLE

DESIGNED BY S.BUTLER
DRAWN BY S.BUTLER
CHECKED BY S. DAVIS

ISSUED BY ENGINEERING SERVICES TERMINAL

DATE 9/12/2025 JCN: 1508914

DRAWING NO. LEV - D - VORTAC - VF102 REV.

LEEVILLE VORTAC
GRAND ISLE LOUISIANA

F8
VF103

EXISTING CONDITIONS PLAN

1" = 20'

0 10 20 40 FEET
Scale: 1 INCH = 20 FEET

N

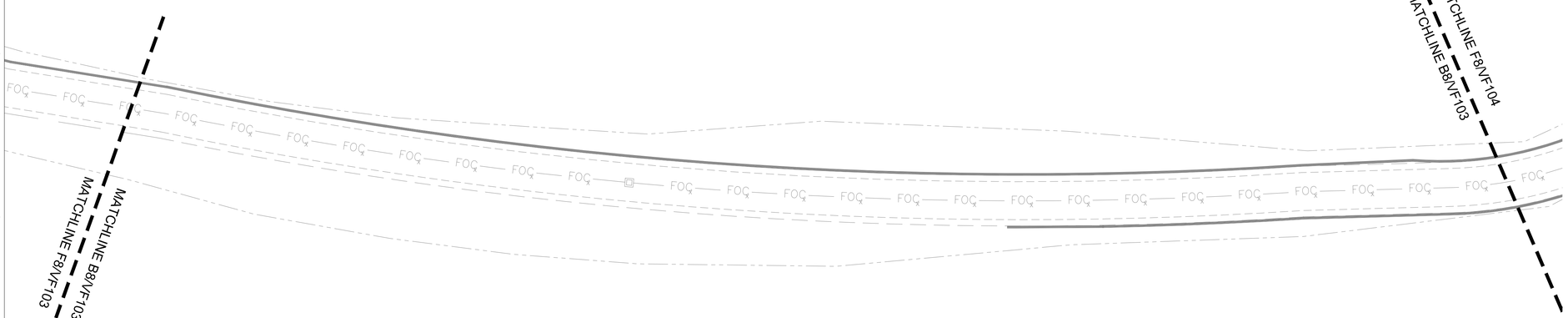

B8
VF103

EXISTING CONDITIONS PLAN

1" = 20'

0 10 20 40 FEET
Scale: 1 INCH = 20 FEET

N

SURVEY NOTES

A. PROPERTY OWNER: BOUZIGARD, TEENA MARIE PLAISANCE & OTHERS WITH PARCEL ID OF 0102565900.

B. VERTICAL DATUM: NORTH AMERICAN VERTICAL DATUM 1988.

C. MERIDIAN AND COORDINATES REFER TO LOUISIANA STATE PLANE, NAD N83, LOUISIANA SOUTH ZONE AND ARE BASED ON GPS OBSERVATIONS. OBTAINED BY LOUISIANA STATE UNIVERSITY ENGINEERING DEPARTMENT. WITH C4GNET.XYZ REAL-TIME NETWORK RTCM3.2 RTK.

D. THIS PLAN IS BASED UPON SURVEY INFORMATION PROVIDED BY A FIELD SURVEY PREPARED BY TECTONIC ENGINEERING CONSULTANTS AND GEOLOGISTS & AND LAND SURVEYORS COMPLETED ON 11/27/2023 AND OTHER REFERENCE MATERIALS LISTED BELOW.

E. EXISTING UNDERGROUND UTILITIES WERE NOT LOCATED IN THE FIELD BY THIS SURVEY.

F. THE SITE FALLS WITHIN FLOOD ZONE "A13" WITH A BASE FLOOD ELEVATION OF 11' AS PER THE NATIONAL FLOOD INSURANCE RATE MAP FOR THE LAFOURSHE PARISH, STATE OF LOUISIANA, COMMUNITY PANEL NO # 225202-0850 D, EFFECTIVE DATE OF MAY 4, 1992. THIS DETERMINATION IS BASED ON SCALED MAP LOCATION AND GRAPHIC PLOTTING.

G. WETLANDS HAVE NOT BEEN LOCATED OR SHOWN AS PART OF THIS FIELD SURVEY.

H. REFERENCE: TROPICAL STORM NATE ROAD RECONSTRUCTION ACCESS ROAD IMPROVEMENTS PLANS DATED 05/06/2022.

KEY PLAN

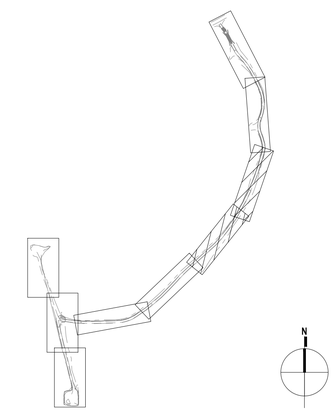

FOR OFFICIAL USE ONLY
PUBLIC AVAILABILITY TO BE DETERMINED UNDER 5 USC 552

COMMONWEALTH OF VIRGINIA
MARCO PADILLA CACERES
Lic. No. 65289
9/12/2025
PROFESSIONAL ENGINEER

JACOBS
1100 N GLEBE RD.
SUITE 500
ARLINGTON, VA 22201

REV.	APPROVED DATE	DESCRIPTION	JCN	REDLINE DATE	APVD

DEPARTMENT OF TRANSPORTATION
FEDERAL AVIATION ADMINISTRATION
CENTRAL SERVICE REGION — FT WORTH, TX

Jacobs

LEEVILLE (LEV) VORTAC REPLACEMENT

EXISTING CONDITIONS PLAN

GRAND ISLE — LEEVILLE (LEV) VORTAC — LA

REVIEWED BY | SUBMITTED BY | APPROVED BY
SUBMITTER'S TITLE | APPROVER'S TITLE

DESIGNED BY S.BUTLER
DRAWN BY S.BUTLER
CHECKED BY S. DAVIS

ISSUED BY ENGINEERING SERVICES TERMINAL

DATE 9/12/2025 JCN: 1508914
DRAWING NO. LEV - D - VORTAC - VF103
REV.

LEEVILLE VORTAC
GRAND ISLE LOUISIANA

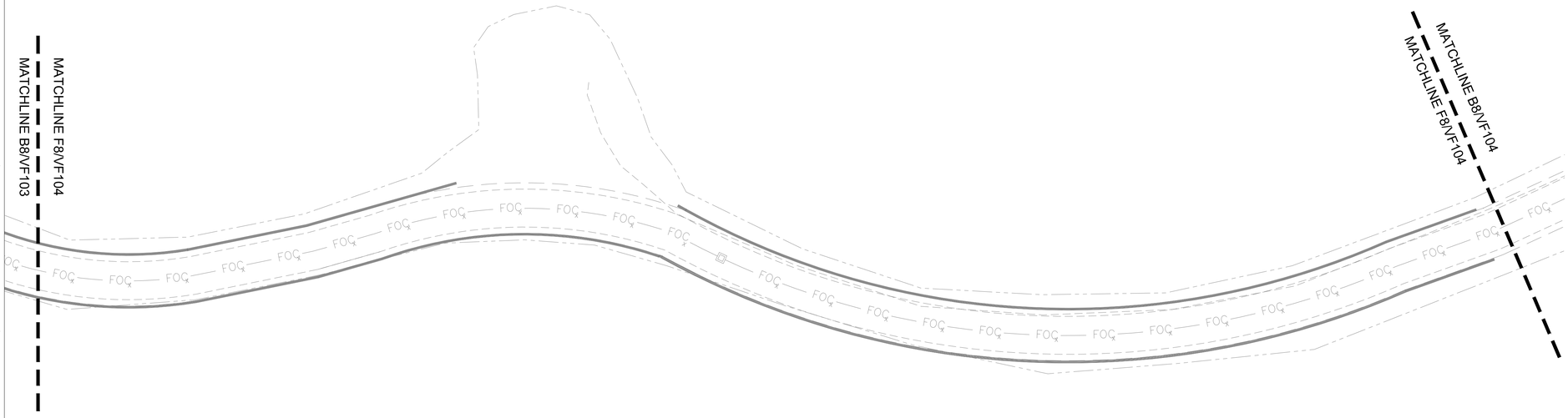

F8
VF104

EXISTING CONDITIONS PLAN

1" = 20'

0 10 20 40 FEET
Scale: 1 INCH = 20 FEET

N

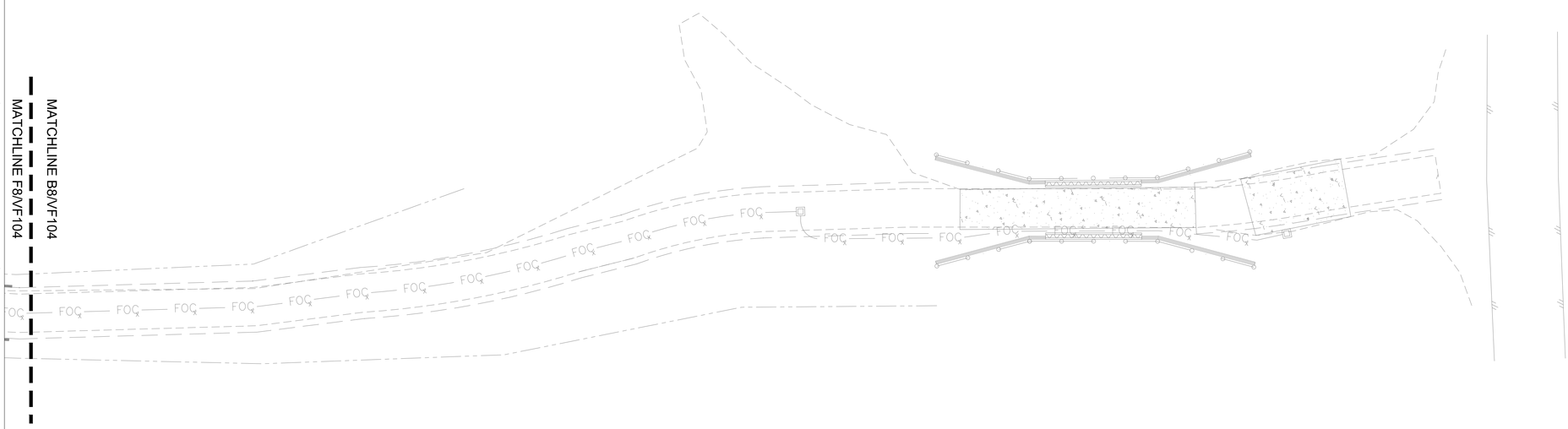

B8
VF104

EXISTING CONDITIONS PLAN

1" = 20'

0 10 20 40 FEET
Scale: 1 INCH = 20 FEET

N

SURVEY NOTES

A. PROPERTY OWNER: BOUZIGARD, TEENA MARIE PLAISANCE & OTHERS WITH PARCEL ID OF 0102565900.

B. VERTICAL DATUM: NORTH AMERICAN VERTICAL DATUM 1988.

C. MERIDIAN AND COORDINATES REFER TO LOUISIANA STATE PLANE, NAD N83, LOUISIANA SOUTH ZONE AND ARE BASED ON GPS OBSERVATIONS. OBTAINED BY LOUISIANA STATE UNIVERSITY ENGINEERING DEPARTMENT. WITH C4GNET.XYZ REAL-TIME NETWORK RTCM3.2 RTK.

D. THIS PLAN IS BASED UPON SURVEY INFORMATION PROVIDED BY A FIELD SURVEY PREPARED BY TECTONIC ENGINEERING CONSULTANTS AND GEOLOGISTS & AND LAND SURVEYORS COMPLETED ON 11/27/2023 AND OTHER REFERENCE MATERIALS LISTED BELOW.

E. EXISTING UNDERGROUND UTILITIES WERE NOT LOCATED IN THE FIELD BY THIS SURVEY.

F. THE SITE FALLS WITHIN FLOOD ZONE "A13" WITH A BASE FLOOD ELEVATION OF 11' AS PER THE NATIONAL FLOOD INSURANCE RATE MAP FOR THE LAFOURSHE PARISH, STATE OF LOUISIANA, COMMUNITY PANEL NO # 225202-0850 D, EFFECTIVE DATE OF MAY 4, 1992. THIS DETERMINATION IS BASED ON SCALED MAP LOCATION AND GRAPHIC PLOTTING.

G. WETLANDS HAVE NOT BEEN LOCATED OR SHOWN AS PART OF THIS FIELD SURVEY.

H. REFERENCE: TROPICAL STORM NATE ROAD RECONSTRUCTION ACCESS ROAD IMPROVEMENTS PLANS DATED 05/06/2022.

KEY PLAN

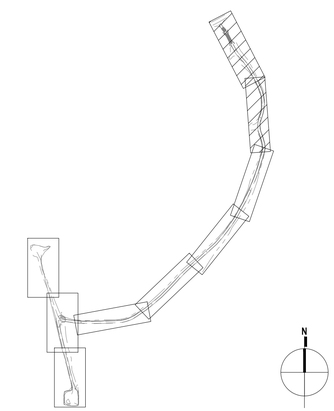

FOR OFFICIAL USE ONLY
PUBLIC AVAILABILITY TO BE DETERMINED UNDER 5 USC 552

COMMONWEALTH OF VIRGINIA
MARCO PADILLA CACERES
Lic. No. 65289
9/12/2025
PROFESSIONAL ENGINEER

JACOBS
1100 N GLEBE RD.
SUITE 500
ARLINGTON, VA 22201

REV.	APPROVED DATE	DESCRIPTION	JCN	REDLINE DATE	APVD

DEPARTMENT OF TRANSPORTATION
FEDERAL AVIATION ADMINISTRATION
CENTRAL SERVICE REGION — FT WORTH, TX

Jacobs

LEEVILLE (LEV) VORTAC REPLACEMENT

EXISTING CONDITIONS PLAN

GRAND ISLE — LEEVILLE (LEV) VORTAC — LA

REVIEWED BY | SUBMITTED BY | APPROVED BY
SUBMITTER'S TITLE | APPROVER'S TITLE

LEEVILLE VORTAC
GRAND ISLE LOUISIANA

DESIGNED BY S.BUTLER
DRAWN BY S.BUTLER
CHECKED BY S. DAVIS

ISSUED BY ENGINEERING SERVICES TERMINAL

DATE 9/12/2025 JCN: 1508914
DRAWING NO. LEV - D - VORTAC - VF104
REV.

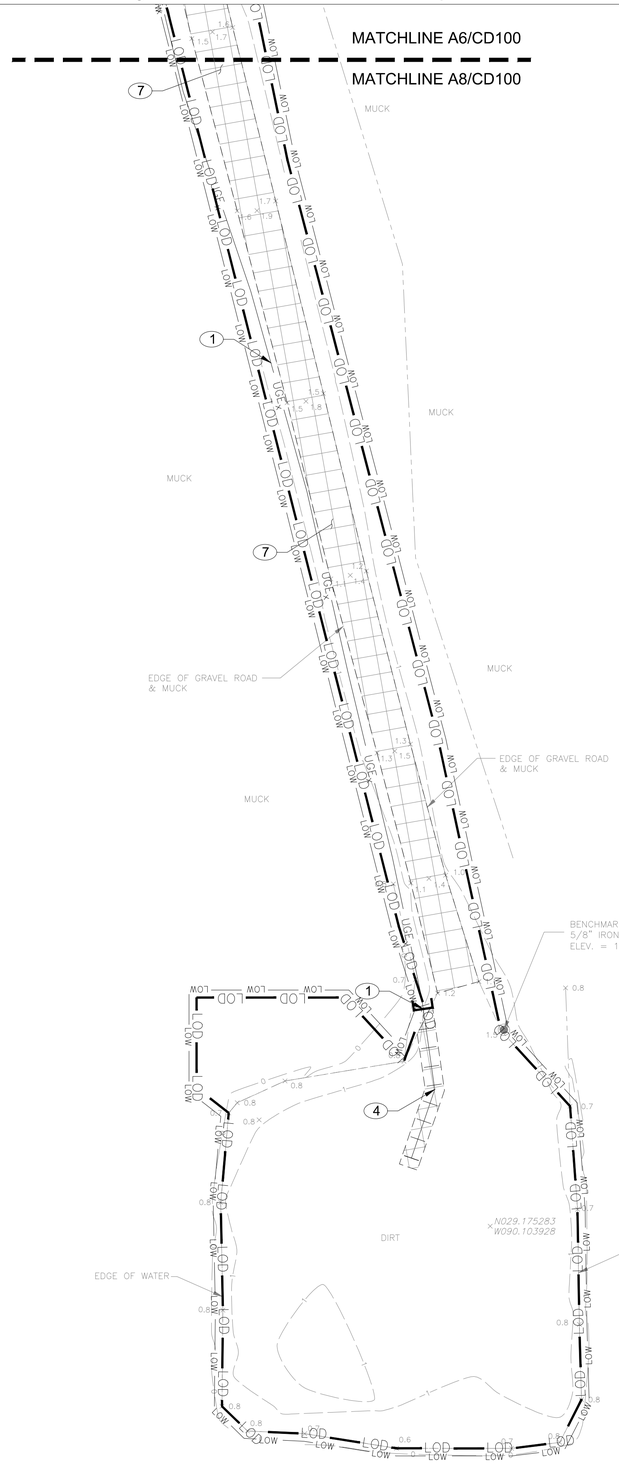

A8 CD100 DEMOLITION PLAN

1" = 20'

0 10 20 40 FEET

Scale: 1 INCH = 20 FEET

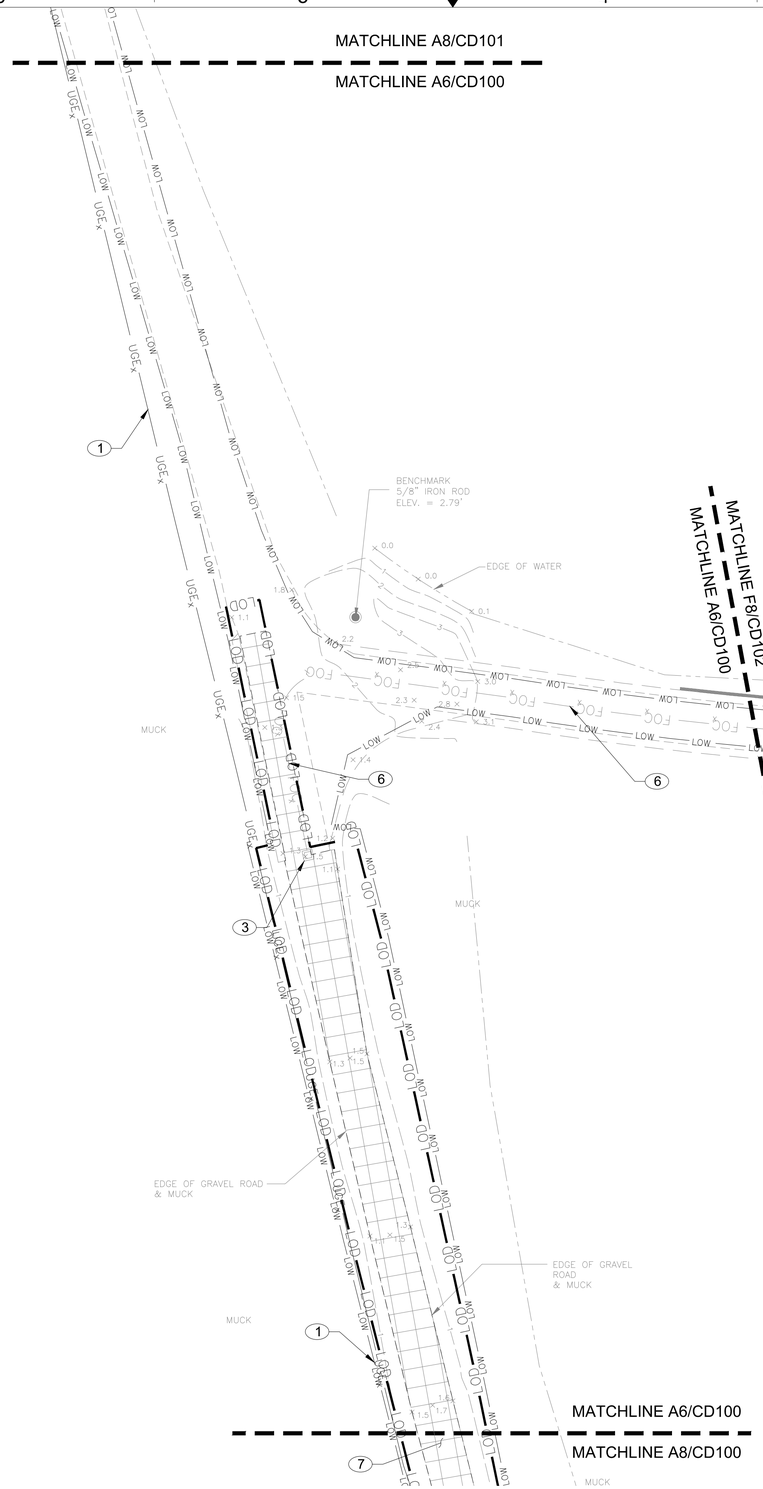

A6 CD100 DEMOLITION PLAN

1" = 20'

0 10 20 40 FEET

Scale: 1 INCH = 20 FEET

GENERAL SHEET NOTES

A. SEE SHEET C001 FOR GENERAL CONSTRUCTION NOTES.

B. LIMITS AND ITEMS SHOWN FOR REMOVAL ARE BASED ON THE AVAILABLE INFORMATION FROM TROPICAL STORM NATE ROAD RECONSTRUCTION ACCESS ROAD IMPROVEMENTS PLANS DATED 05/06/2022. REMOVE ANY ITEMS NOT SHOWN WITHIN THE LIMITS OF CONSTRUCTION NECESSARY TO COMPLETE THE REQUIRED WORK. NOTIFY COR IN WRITING OF ITEMS NOT SHOWN WITHIN THE LIMITS OF DISTURBANCE THAT REQUIRE DEMOLITION OR TEMPORARY REMOVAL TO COMPLETE THE REQUIRED WORK.

C. PROTECT EXISTING FEATURES TO REMAIN, INCLUDING ROADS, UTILITIES, PAVING AND SIMILAR ITEMS NOT PART OF THE CONTRACT WORK. REPAIR OR REPLACE ITEMS TO REMAIN THAT ARE DAMAGED TO MEET OR EXCEED THEIR EXISTING CONDITION. TEMPORARILY REMOVED ITEMS MUST BE STORED IN A SAFE AND SECURE AREA. TEMPORARILY REMOVED ITEMS THAT ARE DAMAGED DURING STORAGE OR REPLACEMENT MUST BE REPAIRED TO MEET OR EXCEED THEIR EXISTING CONDITION.

D. UTILITIES NOTED FOR REMOVAL MUST BE FIELD VERIFIED. NOTIFY AND SCHEDULE INTENDED UTILITY INTERRUPTIONS WITH THE COR PRIOR TO WORK.

E. COORDINATE THE LIMITS OF REMOVAL AND DISTURBANCE WITH THE SITE LAYOUT PLANS.

F. DEMOLISH OR ABANDON IN PLACE EXISTING UTILITIES AS SHOWN ON THE DESIGN DOCUMENTS.

G. HAND DIG OR VACUUM EXCAVATE TEST PITS AT UTILITY CONNECTIONS AND UTILITY CROSSINGS PRIOR TO CONSTRUCTION TO VERIFY EXISTING UTILITY LOCATIONS AND DEPTHS. NOTIFY THE COR OF ANY ISSUES THAT WOULD PROHIBIT THE INSTALLATION OF ANY FEATURE WITHIN THE PARAMETERS SET FORTH ON THESE PLANS.

H. DETERMINE THE LOCATION OF EXISTING UNDERGROUND UTILITIES WITHIN THE PROJECT LIMITS USING GROUND PENETRATION RADAR (GPR) OR OTHER ACCEPTABLE METHODS.

KEY PLAN

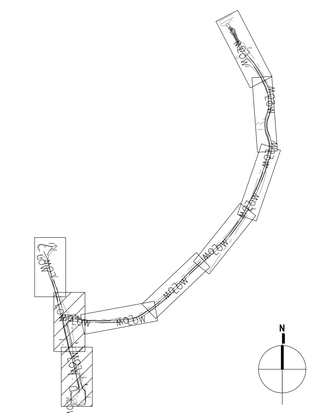

SHEET NOTES

1. ABANDON UNDERGROUND POWER SERVICE
2. NOT USED
3. FIBER OPTIC VAULT, ETR
4. REMOVE UNDERGROUND POWER
5. NOT USED
6. FIBER OPTIC CONDUIT, ETR
7. REMOVE GRAVEL

FOR OFFICIAL USE ONLY

PUBLIC AVAILABILITY TO BE DETERMINED UNDER 5 USC 552

COMMONWEALTH OF VIRGINIA
MARCO PADILLA CACERES
Lic. No. 65289
9/12/2025
PROFESSIONAL ENGINEER

JACOBS
1100 N GLEBE RD.
SUITE 500
ARLINGTON, VA 22201

REV.	APPROVED DATE	DESCRIPTION	JCN	REDLINE DATE	APVD

DEPARTMENT OF TRANSPORTATION

FEDERAL AVIATION ADMINISTRATION

CENTRAL SERVICE REGION — FT WORTH, TX

LEEVILLE (LEV) VORTAC REPLACEMENT

DEMOLITION PLAN

GRAND ISLE — LEEVILLE (LEV) VORTAC — LA

REVIEWED BY | SUBMITTED BY | APPROVED BY

SUBMITTER'S TITLE | APPROVER'S TITLE

LEEVILLE VORTAC

GRAND ISLE LOUISIANA

DESIGNED BY S.BUTLER
DRAWN BY S.BUTLER
CHECKED BY S. DAVIS

ISSUED BY ENGINEERING SERVICES TERMINAL

DATE 9/12/2025 JCN: 1508914

DRAWING NO. LEV - D - VORTAC - CD100

REV.

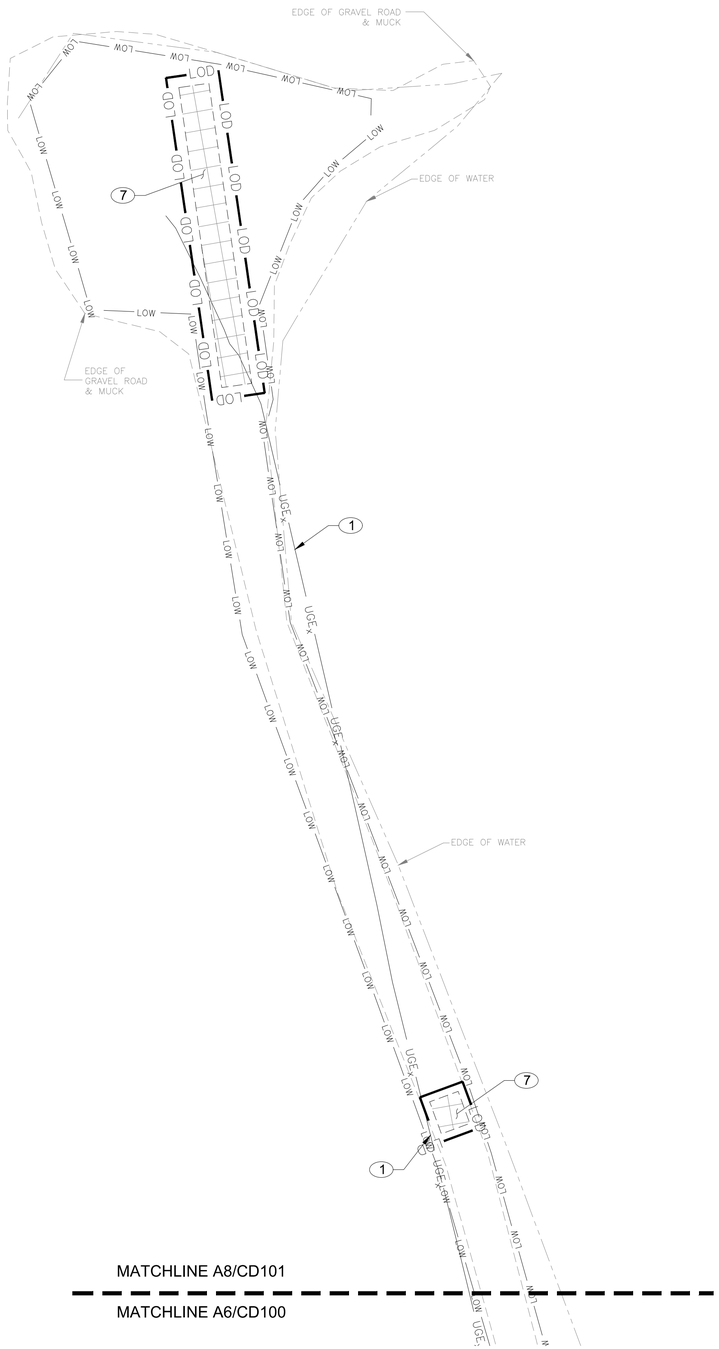

A8
CD101

DEMOLITION PLAN

1" = 20'

0 10 20 40 FEET
Scale: 1 INCH = 20 FEET

N

GENERAL SHEET NOTES

A. SEE SHEET C001 FOR GENERAL CONSTRUCTION NOTES.

SHEET NOTES

1. ABANDON UNDERGROUND POWER SERVICE
2. NOT USED
3. NOT USED
4. NOT USED
5. NOT USED
6. NOT USED
7. REMOVE GRAVEL

KEY PLAN

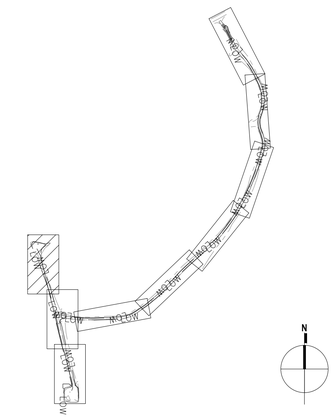

FOR OFFICIAL USE ONLY
PUBLIC AVAILABILITY TO BE DETERMINED UNDER 5 USC 552

COMMONWEALTH OF VIRGINIA
MARCO PADILLA CACERES
Lic. No. 65289
9/12/2025
PROFESSIONAL ENGINEER

JACOBS
1100 N GLEBE RD.
SUITE 500
ARLINGTON, VA 22201

REV.	APPROVED DATE	DESCRIPTION	JCN	REDLINE DATE	APVD

Jacobs

DEPARTMENT OF TRANSPORTATION
FEDERAL AVIATION ADMINISTRATION
CENTRAL SERVICE REGION — FT WORTH, TX

LEEVILLE (LEV) VORTAC REPLACEMENT

EXISTING CONDITION AND DEMOLITION PLAN

GRAND ISLE — LEEVILLE (LEV) VORTAC — LA

REVIEWED BY	SUBMITTED BY	APPROVED BY
	SUBMITTER'S TITLE	APPROVER'S TITLE

LEEVILLE VORTAC
GRAND ISLE LOUISIANA

DESIGNED BY	S.BUTLER	ISSUED BY	ENGINEERING SERVICES TERMINAL
DRAWN BY	S.BUTLER	DATE	9/12/2025
CHECKED BY	S. DAVIS	JCN	1508914
		DRAWING NO.	LEV - D - VORTAC - CD101
		REV.	

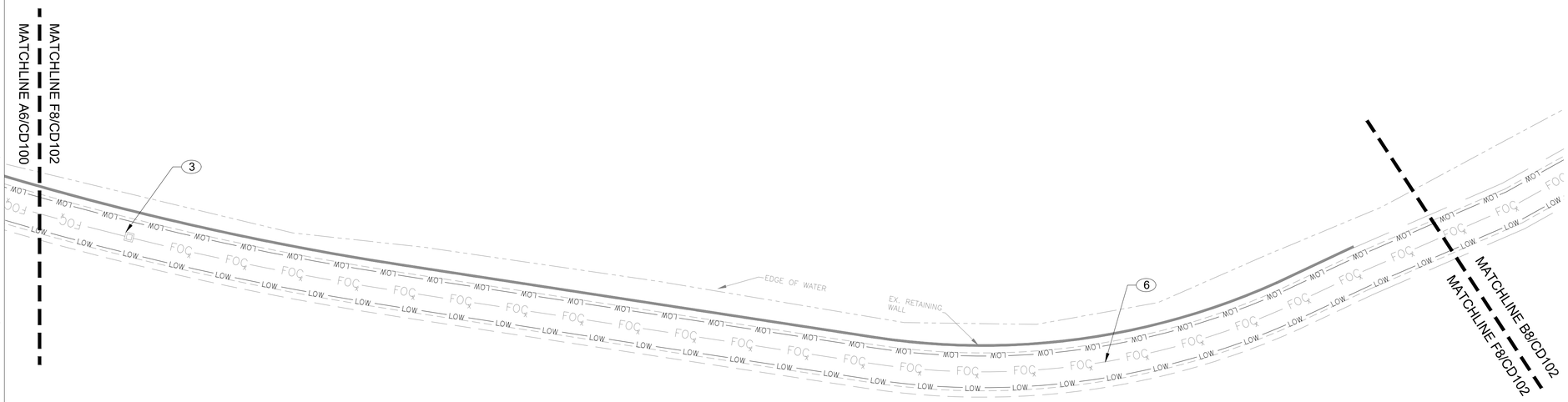

F8 CD102 DEMOLITION PLAN

1" = 20'

0 10 20 40 FEET

Scale: 1 INCH = 20 FEET

N

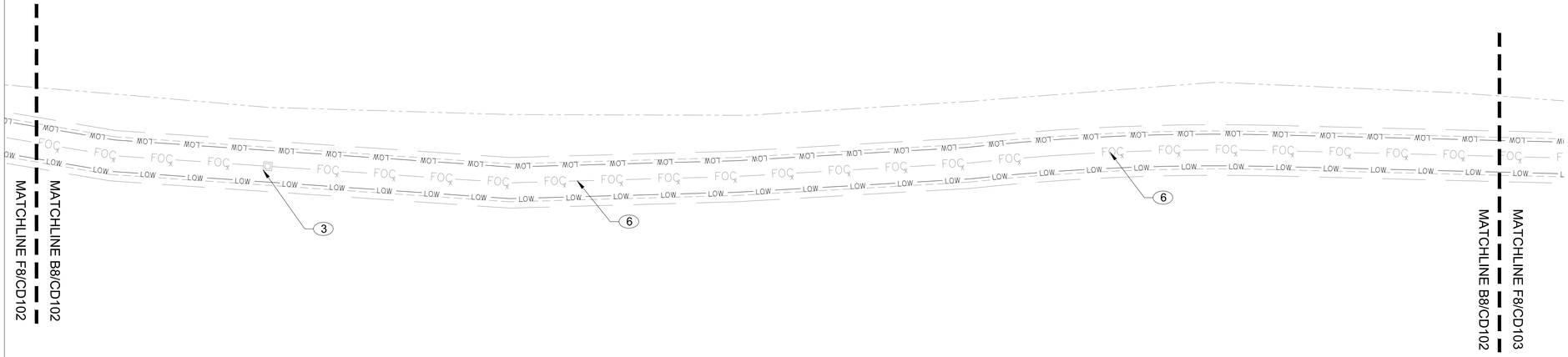

B8 CD102 DEMOLITION PLAN

1" = 20'

0 10 20 40 FEET

Scale: 1 INCH = 20 FEET

N

GENERAL SHEET NOTES

A. SEE SHEET C001 FOR GENERAL CONSTRUCTION NOTES.

SHEET NOTES

1. NOT USED
2. NOT USED
3. FIBER OPTIC VAULT, ETR
4. NOT USED
5. NOT USED
6. FIBER OPTIC CONDUIT, ETR
7. NOT USED

KEY PLAN

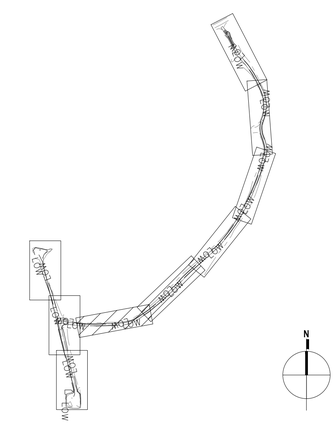

N

FOR OFFICIAL USE ONLY

PUBLIC AVAILABILITY TO BE DETERMINED UNDER 5 USC 552

COMMONWEALTH OF VIRGINIA
MARCO PADILLA CACERES
Lic. No. 65289
9/12/2025
PROFESSIONAL ENGINEER

JACOBS
1100 N GLEBE RD.
SUITE 500
ARLINGTON, VA 22201

Jacobs

LEEVILLE VORTAC
GRAND ISLE LOUISIANA

REV.	APPROVED DATE	DESCRIPTION	JCN	REDLINE DATE	APVD

DEPARTMENT OF TRANSPORTATION
FEDERAL AVIATION ADMINISTRATION
CENTRAL SERVICE REGION — FT WORTH, TX

LEEVILLE (LEV) VORTAC REPLACEMENT

EXISTING CONDITION AND DEMOLITION PLAN

GRAND ISLE — LEEVILLE (LEV) VORTAC — LA

REVIEWED BY	SUBMITTED BY	APPROVED BY
	SUBMITTER'S TITLE	APPROVER'S TITLE

DESIGNED BY S.BUTLER	ISSUED BY ENGINEERING SERVICES TERMINAL	DATE 9/12/2025	JCN: 1508914
DRAWN BY S.BUTLER		DRAWING NO. LEV - D - VORTAC - CD102	REV.
CHECKED BY S. DAVIS			

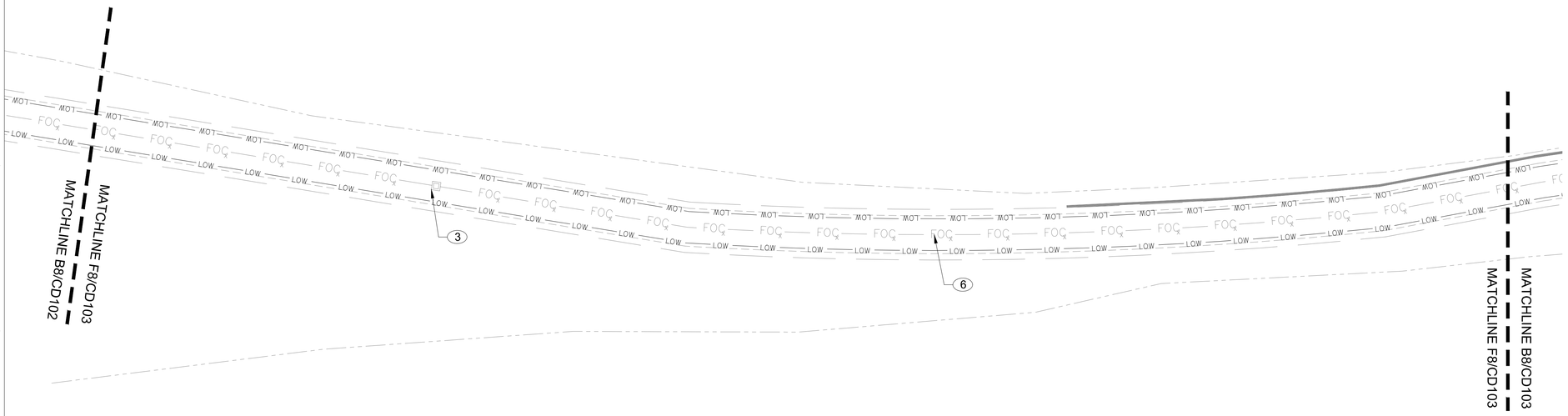

F8 DEMOLITION PLAN

CD103

1" = 20'

0 10 20 40 FEET

Scale: 1 INCH = 20 FEET

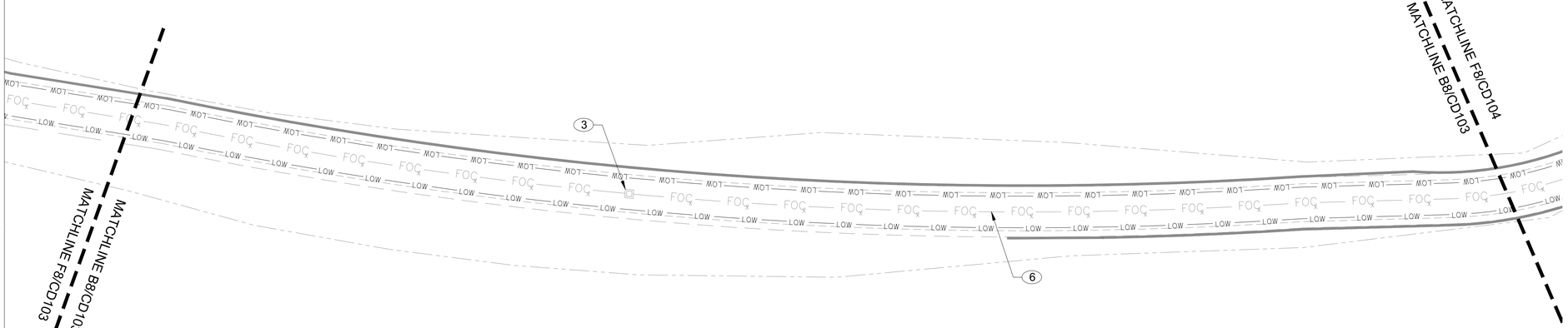

B8 DEMOLITION PLAN

CD103

1" = 20'

0 10 20 40 FEET

Scale: 1 INCH = 20 FEET

GENERAL SHEET NOTES

A. SEE SHEET C001 FOR GENERAL CONSTRUCTION NOTES.

SHEET NOTES

1. NOT USED
2. NOT USED
3. FIBER OPTIC VAULT, ETR
4. NOT USED
5. NOT USED
6. FIBER OPTIC CONDUIT, ETR
7. NOT USED

KEY PLAN

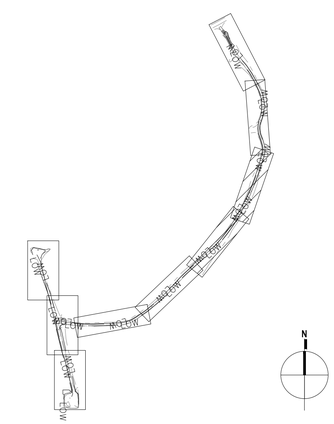

FOR OFFICIAL USE ONLY

PUBLIC AVAILABILITY TO BE DETERMINED UNDER 5 USC 552

COMMONWEALTH OF VIRGINIA
MARCO PADILLA CACERES
Lic. No. 65289
9/12/2025
PROFESSIONAL ENGINEER

JACOBS
1100 N GLEBE RD.
SUITE 500
ARLINGTON, VA 22201

REV.	APPROVED DATE	DESCRIPTION	JCN	REDLINE DATE	APVD

DEPARTMENT OF TRANSPORTATION
FEDERAL AVIATION ADMINISTRATION
CENTRAL SERVICE REGION — FT WORTH, TX

LEEVILLE (LEV) VORTAC REPLACEMENT

EXISTING CONDITION AND DEMOLITION PLAN

GRAND ISLE — LEEVILLE (LEV) VORTAC — LA

REVIEWED BY	SUBMITTED BY	APPROVED BY
	SUBMITTER'S TITLE	APPROVER'S TITLE

DESIGNED BY S.BUTLER
DRAWN BY S.BUTLER
CHECKED BY S. DAVIS
ISSUED BY ENGINEERING SERVICES TERMINAL
DATE 9/12/2025 JCN: 1508914
DRAWING NO. LEV - D - VORTAC - CD103
REV.

LEEVILLE VORTAC
GRAND ISLE LOUISIANA

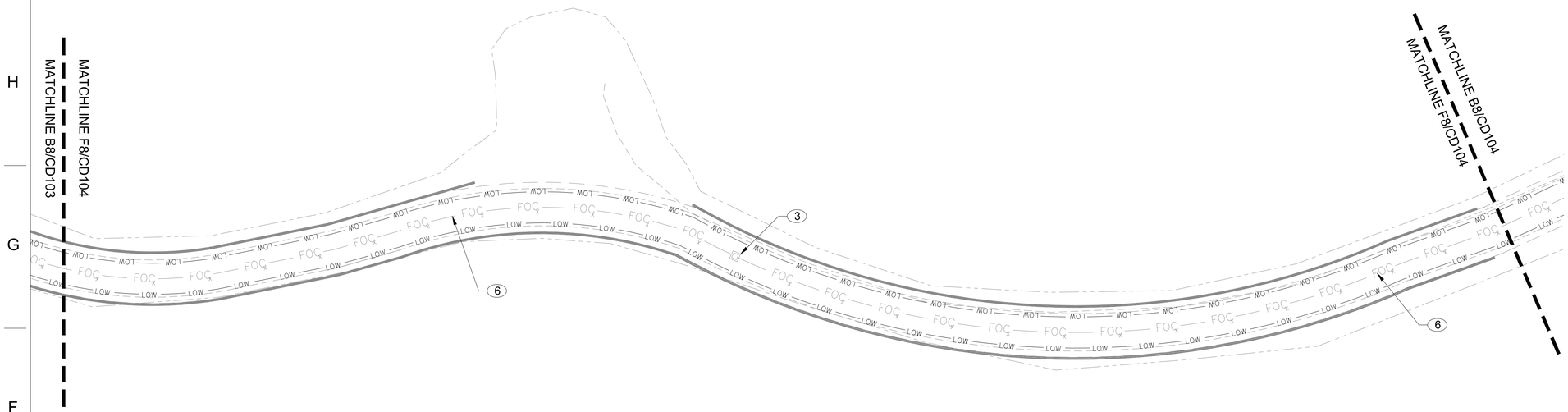

F8 DEMOLITION PLAN

CD104

1" = 20'

0 10 20 40 FEET

Scale: 1 INCH = 20 FEET

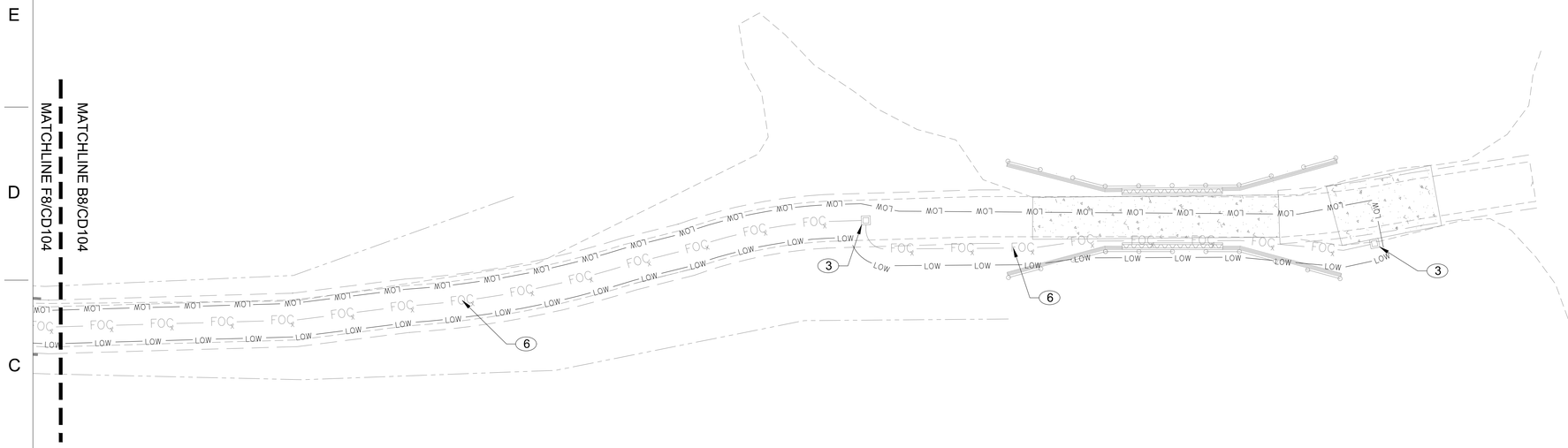

B8 DEMOLITION PLAN

CD104

1" = 20'

0 10 20 40 FEET

Scale: 1 INCH = 20 FEET

GENERAL SHEET NOTES

A. SEE SHEET C001 FOR GENERAL CONSTRUCTION NOTES.

SHEET NOTES

1. NOT USED
2. NOT USED
3. FIBER OPTIC VAULT, ETR
4. NOT USED
5. NOT USED
6. FIBER OPTIC CONDUIT, ETR
7. NOT USED

KEY PLAN

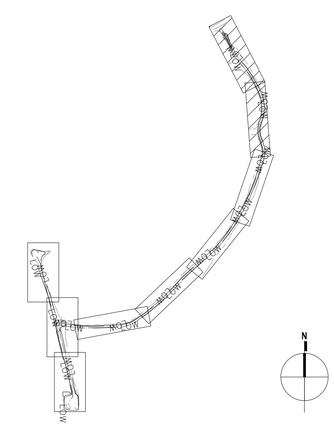

FOR OFFICIAL USE ONLY

PUBLIC AVAILABILITY TO BE DETERMINED UNDER 5 USC 552

COMMONWEALTH OF VIRGINIA
MARCO PADILLA CACERES
Lic. No. 65289
9/12/2025
PROFESSIONAL ENGINEER

JACOBS
1100 N GLEBE RD.
SUITE 500
ARLINGTON, VA 22201

REV.	APPROVED DATE	DESCRIPTION	JCN	REDLINE DATE	APVD

Jacobs

DEPARTMENT OF TRANSPORTATION
FEDERAL AVIATION ADMINISTRATION
CENTRAL SERVICE REGION — FT WORTH, TX

LEEVILLE (LEV) VORTAC REPLACEMENT

EXISTING CONDITION AND DEMOLITION PLAN

GRAND ISLE — LEEVILLE (LEV) VORTAC — LA

LEEVILLE VORTAC
GRAND ISLE LOUISIANA

REVIEWED BY	SUBMITTED BY	APPROVED BY	
	SUBMITTER'S TITLE	APPROVER'S TITLE	
DESIGNED BY S.BUTLER	ISSUED BY ENGINEERING SERVICES TERMINAL	DATE 9/12/2025	JCN: 1508914
DRAWN BY S.BUTLER		DRAWING NO. LEV - D - VORTAC - CD104	REV.
CHECKED BY S. DAVIS			

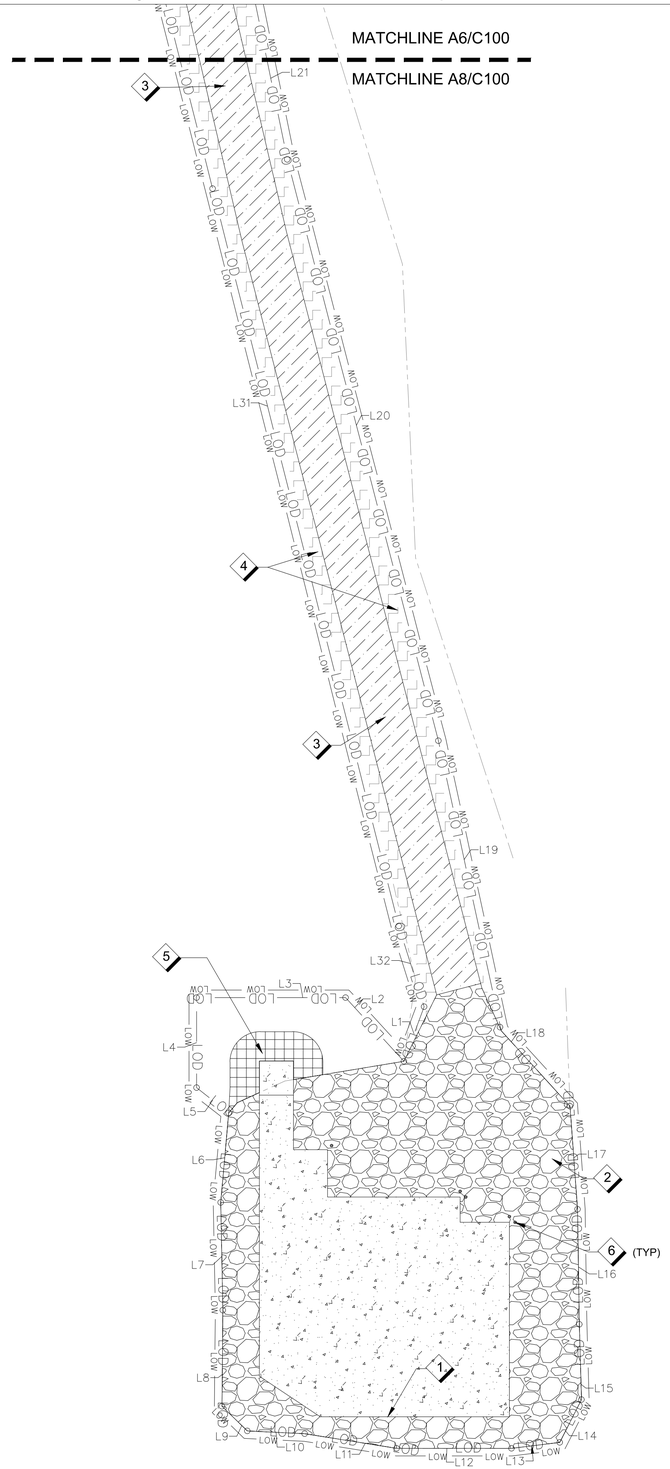

A8 C100 SITE PLAN

1" = 20'

0 10 20 40 FEET

Scale: 1 INCH = 20 FEET

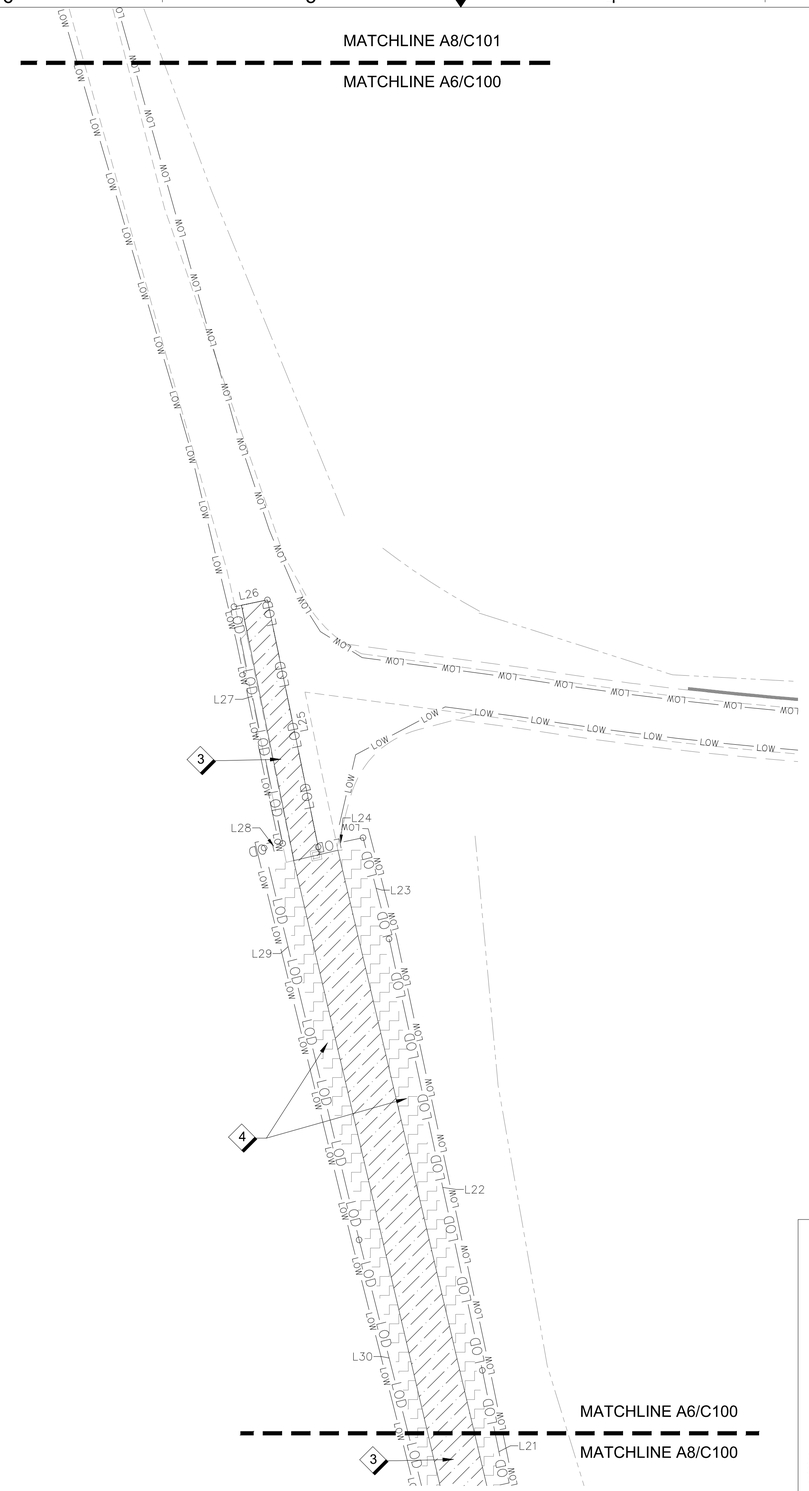

A6 C100 SITE PLAN

1" = 20'

0 10 20 40 FEET

Scale: 1 INCH = 20 FEET

LOD LINE TABLE		
Line #	Length	Direction
L1	15.35	S20° 21' 02.44"W
L2	22.79	N42° 29' 41.88"W
L3	39.34	N90° 00' 00.00"W
L4	23.76	S0° 00' 00.00"E
L5	10.81	S51° 48' 00.59"E
L6	23.72	S5° 05' 45.08"W
L7	28.43	S1° 08' 41.82"E
L8	25.36	S0° 32' 20.54"W
L9	9.33	S45° 47' 27.22"E
L10	15.17	S87° 13' 58.28"E
L11	24.56	S80° 58' 42.76"E
L12	30.33	S89° 56' 45.10"E
L13	12.82	N82° 51' 59.00"E
L14	12.66	N26° 57' 34.59"E
L15	19.87	N1° 38' 42.47"W
L16	30.38	N0° 53' 56.05"W
L17	27.28	N4° 09' 39.56"W
L18	26.92	N42° 21' 34.26"W
L19	78.35	N12° 13' 36.55"W
L20	158.51	N14° 34' 30.34"W
L21	43.77	N11° 33' 07.59"W
L22	116.51	N12° 11' 23.66"W
L23	27.58	N14° 26' 06.46"W
L24	12.08	S78° 23' 27.20"W
L25	66.58	N11° 36' 32.80"W
L26	9.00	S78° 23' 27.20"W
L27	63.81	S11° 36' 32.80"E
L28	5.04	S76° 12' 08.71"W
L29	106.43	S13° 37' 33.80"E
L30	87.71	S14° 13' 42.21"E
L31	200.73	S14° 09' 49.03"E
L32	22.33	S17° 28' 59.04"E

GENERAL SHEET NOTES

A. SEE SHEET C001 FOR LEGEND AND GENERAL CONSTRUCTION NOTES.

B. EXTENTS OF PROPOSED GRAVEL RESURFACING ADDITION MUST MATCH EXTENTS OF EXISTING GRAVEL WITHIN THE LIMITS OF DISTURBANCE.

C. FINISH GRAVEL ACCESS ROAD SURFACE MUST BE FLUSH WITHIN SPECIFIED TOLERANCES WITH EXISTING SURFACE FEATURES TO INCLUDE BUT NOT LIMITED EXISTING GRAVEL ROAD AND EXISTING FIBER OPTIC VAULTS.

D. REFER TO STRUCTURAL DRAWINGS FOR CONCRETE FOUNDATION PAD DIMENSIONS.

SHEET NOTES

1. PROVIDE CONCRETE FOUNDATION PAD (REFER TO STRUCTURAL DRAWINGS FOR DETAILS)
2. PROVIDE GRAVEL SURFACE
3. PROVIDE GRAVEL ACCESS ROAD
4. PROVIDE SLOPE STABILITY BLANKET
5. PROVIDE RIPRAP TO EXISTING GRADE
6. PROVIDE BOLLARD

KEY PLAN

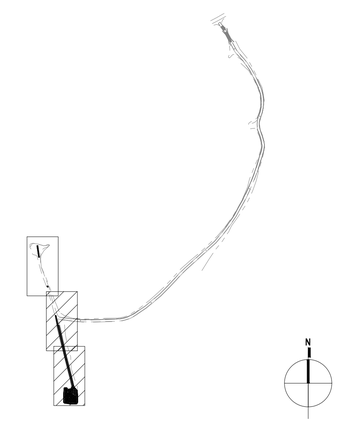

FOR OFFICIAL USE ONLY

PUBLIC AVAILABILITY TO BE DETERMINED UNDER 5 USC 552

COMMONWEALTH OF VIRGINIA
MARCO PADILLA CACERES
Lic. No. 65289
9/12/2025
PROFESSIONAL ENGINEER

JACOBS
1100 N GLEBE RD.
SUITE 500
ARLINGTON, VA 22201

REV.	APPROVED DATE	DESCRIPTION	JCN	REDLINE DATE	APVD

Jacobs

DEPARTMENT OF TRANSPORTATION

FEDERAL AVIATION ADMINISTRATION

CENTRAL SERVICE REGION — FT WORTH, TX

LEEVILLE (LEV) VORTAC REPLACEMENT

SITE PLAN

GRAND ISLE — LEEVILLE (LEV) VORTAC — LA

LEEVILLE VORTAC

GRAND ISLE LOUISIANA

REVIEWED BY	SUBMITTED BY	APPROVED BY
	SUBMITTER'S TITLE	APPROVER'S TITLE

DESIGNED BY S.BUTLER
DRAWN BY S.BUTLER
CHECKED BY S. DAVIS

ISSUED BY ENGINEERING SERVICES TERMINAL

DATE 9/12/2025 JCN: 1508914

DRAWING NO. LEV - D - VORTAC - C100 REV.

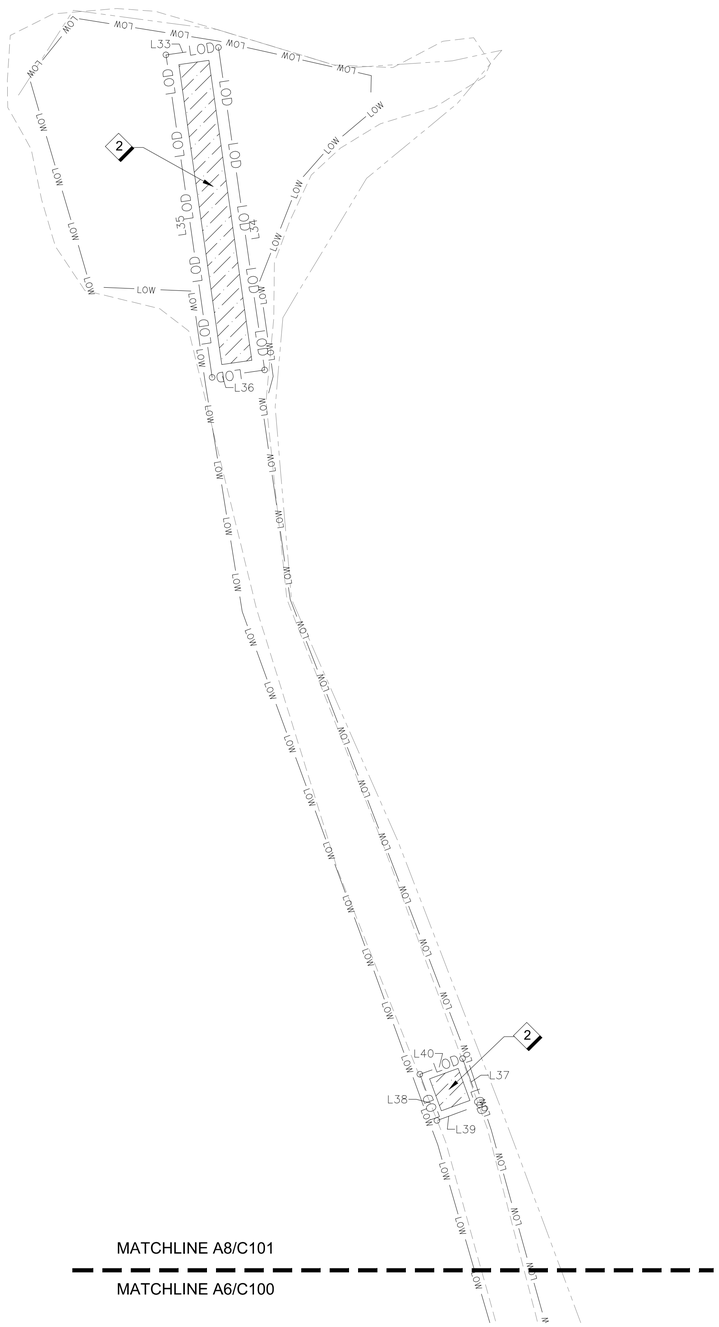

LOD LINE TABLE		
Line #	Length	Direction
L33	14.00	N81° 51' 10.72"E
L34	86.00	S8° 08' 49.28"E
L35	86.00	N8° 08' 49.28"W
L36	14.00	S81° 51' 10.72"W
L37	13.00	S20° 08' 22.12"E
L38	13.00	N20° 08' 22.12"W
L39	12.00	S69° 51' 37.88"W
L40	12.00	N69° 51' 37.88"E

GENERAL SHEET NOTES

A. SEE SHEET C001 FOR LEGEND AND GENERAL CONSTRUCTION NOTES.

B. EXTENTS OF PROPOSED GRAVEL RESURFACING ADDITION MUST MATCH EXTENTS OF EXISTING GRAVEL WITHIN THE LIMITS OF DISTURBANCE.

C. FINISH GRAVEL ACCESS ROAD SURFACE MUST BE FLUSH WITHIN SPECIFIED TOLERANCES WITH EXISTING SURFACE FEATURES TO INCLUDE BUT NOT LIMITED EXISTING GRAVEL ROAD AND EXISTING FIBER OPTIC VAULTS.

D. REFER TO STRUCTURAL DRAWINGS FOR CONCRETE FOUNDATION PAD DIMENSIONS.

SHEET NOTES

1. NOT USED
2. PROVIDE GRAVEL SURFACE
3. NOT USED
4. NOT USED
5. NOT USED
6. NOT USED

KEY PLAN

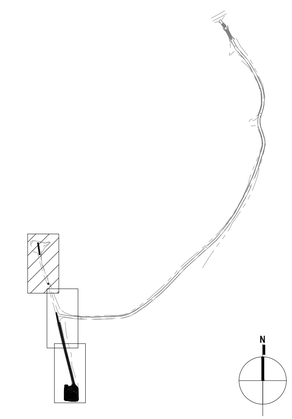

A8
C101

SITE PLAN

1" = 20'

0 10 20 40 FEET
Scale: 1 INCH = 20 FEET

FOR OFFICIAL USE ONLY
PUBLIC AVAILABILITY TO BE DETERMINED UNDER 5 USC 552

COMMONWEALTH OF VIRGINIA
MARCO PADILLA CACERES
Lic. No. 65289
9/12/2025
PROFESSIONAL ENGINEER

JACOBS
1100 N GLEBE RD.
SUITE 500
ARLINGTON, VA 22201

Jacobs

LEEVILLE VORTAC
GRAND ISLE LOUISIANA

REV.	APPROVED DATE	DESCRIPTION	JCN	REDLINE DATE	APVD

DEPARTMENT OF TRANSPORTATION
FEDERAL AVIATION ADMINISTRATION
CENTRAL SERVICE REGION — FT WORTH, TX

LEEVILLE (LEV) VORTAC REPLACEMENT

SITE PLAN

GRAND ISLE — LEEVILLE (LEV) VORTAC — LA

REVIEWED BY	SUBMITTED BY	APPROVED BY
	SUBMITTER'S TITLE	APPROVER'S TITLE

DESIGNED BY S.BUTLER
DRAWN BY S.BUTLER
CHECKED BY S. DAVIS

ISSUED BY ENGINEERING SERVICES TERMINAL

DATE 9/12/2025 JCN: 1508914
DRAWING NO. LEV - D - VORTAC - C101
REV.

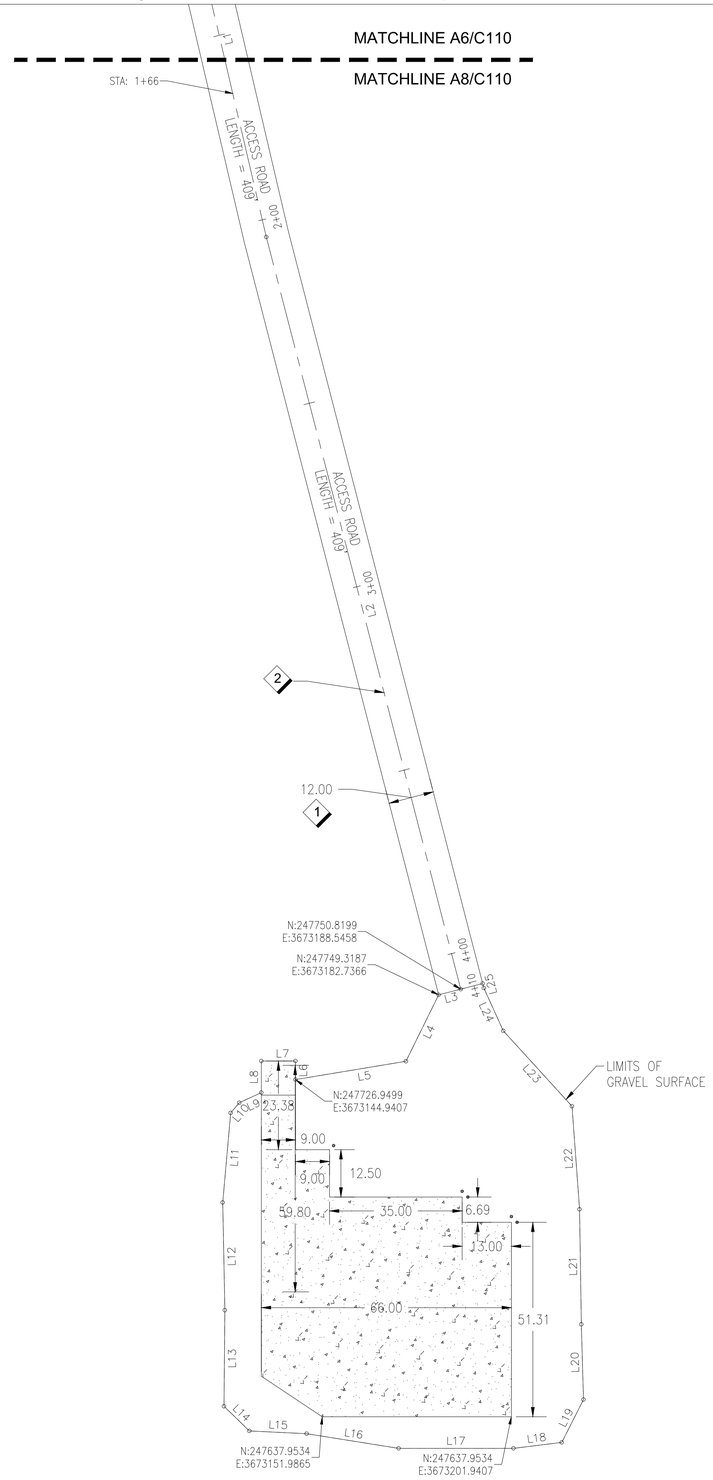

A8 C110 DIMENSIONING PLAN

1" = 20'

0 10 20 40 FEET

Scale: 1 INCH = 20 FEET

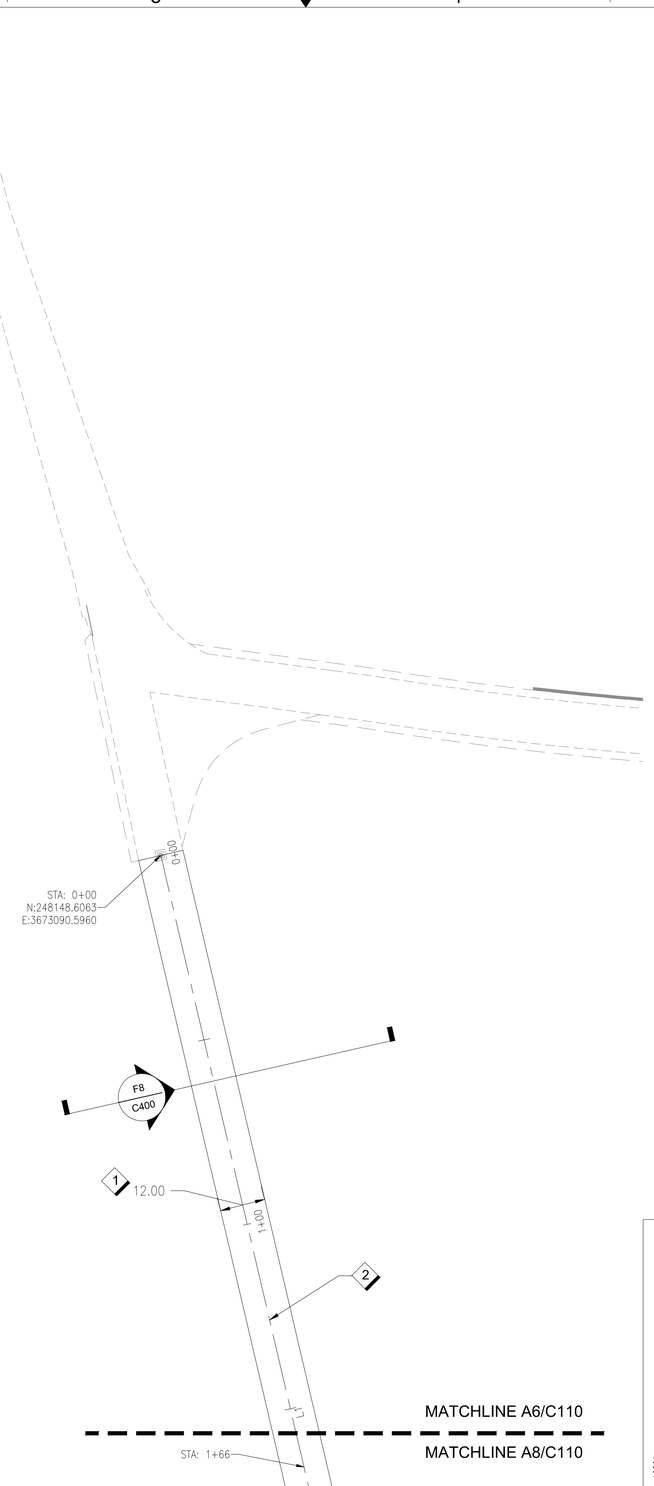

A6 C110 DIMENSIONING PLAN

1" = 20'

0 10 20 40 FEET

Scale: 1 INCH = 20 FEET

ROAD CENTERLINE AND EDGE OF GRAVEL PAD LINE TABLE

Line #	Length	Direction
L1	204.64	S13° 10' 33.54"E
L2	204.58	S14° 29' 20.33"E
L3	5.99	S75° 30' 39.67"W
L4	19.56	S26° 15' 31.72"W
L5	22.85	S80° 35' 36.87"W
L6	4.88	N0° 00' 00.00"E
L7	9.00	N90° 00' 00.00"W
L8	8.33	S0° 00' 00.00"E
L9	6.43	S65° 27' 35.07"W
L10	3.51	S39° 47' 36.78"W
L11	23.72	S5° 05' 45.08"W
L12	28.43	S1° 08' 41.82"E
L13	25.36	S0° 32' 20.54"W
L14	9.33	S45° 47' 27.22"E
L15	15.17	S87° 13' 58.28"E
L16	24.56	S80° 58' 42.76"E
L17	30.33	S89° 56' 45.10"E
L18	12.82	N82° 51' 59.00"E
L19	12.66	N26° 57' 34.59"E
L20	19.87	N1° 38' 42.47"W
L21	30.38	N0° 53' 56.05"W
L22	27.28	N4° 09' 39.56"W
L23	26.92	N42° 21' 34.26"W
L24	12.40	S24° 24' 18.59"E
L25	1.26	N14° 29' 20.33"W

GENERAL SHEET NOTES

A. SEE SHEET C001 FOR LEGEND AND GENERAL CONSTRUCTION NOTES.

B. REFER TO STRUCTURAL DRAWINGS FOR PAD DIMENSIONS AND THICKNESS.

C. DIMENSIONS SHOWN ARE AT THE EDGE OF GRAVEL.

KEY NOTES

1. PROPOSED 12' WIDE GRAVEL ACCESS ROAD
2. ROAD CENTERLINE

KEY PLAN

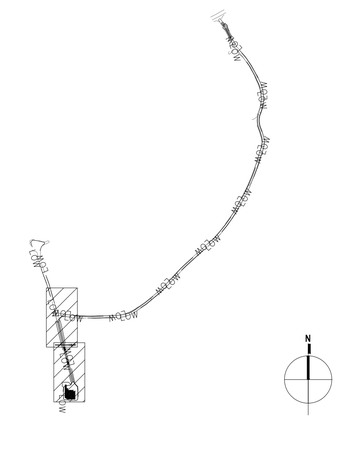

FOR OFFICIAL USE ONLY

PUBLIC AVAILABILITY TO BE DETERMINED UNDER 5 USC 552

COMMONWEALTH OF VIRGINIA
MARCO PADILLA CACERES
Lic. No. 65289
9/12/2025
PROFESSIONAL ENGINEER

JACOBS
1100 N GLEBE RD.
SUITE 500
ARLINGTON, VA 22201

Jacobs

LEEVILLE VORTAC
GRAND ISLE LOUISIANA

REV.	APPROVED DATE	DESCRIPTION	JCN	REDLINE DATE	APVD

DEPARTMENT OF TRANSPORTATION
FEDERAL AVIATION ADMINISTRATION
CENTRAL SERVICE REGION — FT WORTH, TX

LEEVILLE (LEV) VORTAC REPLACEMENT

DIMENSIONING PLAN

GRAND ISLE — LEEVILLE (LEV) VORTAC — LA

REVIEWED BY	SUBMITTED BY	APPROVED BY
	SUBMITTER'S TITLE	APPROVER'S TITLE

DESIGNED BY S.BUTLER	ISSUED BY ENGINEERING SERVICES TERMINAL	DATE 9/12/2025	JCN: 1508914
DRAWN BY S.BUTLER		DRAWING NO. LEV - D - VORTAC - C110	REV.
CHECKED BY S. DAVIS			

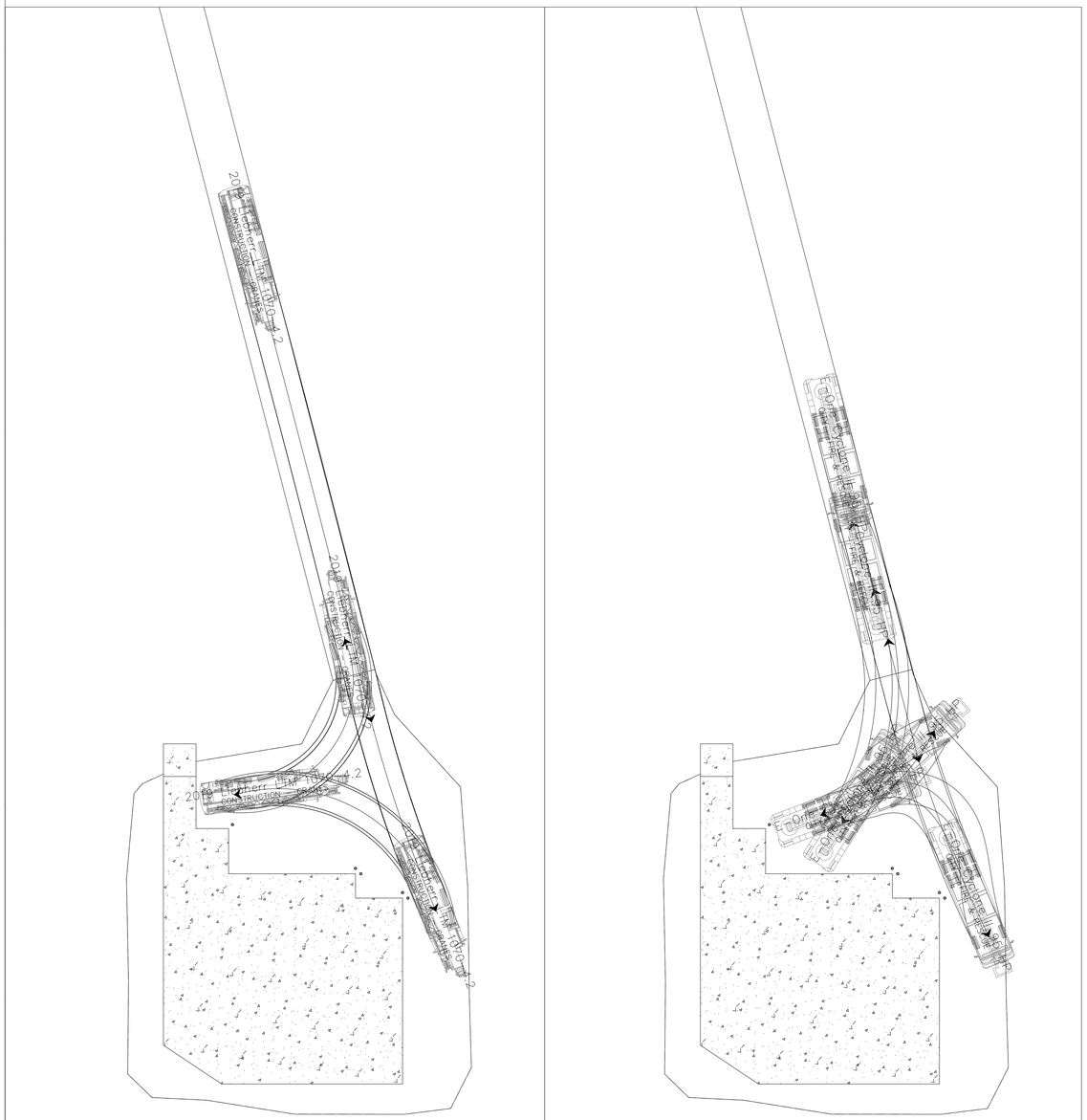

VEHICLE NAME: 2019 LIEBHERR LTM 1070-4.2

VEHICLE NAME: E-ONE CYCLONE II 95 HP

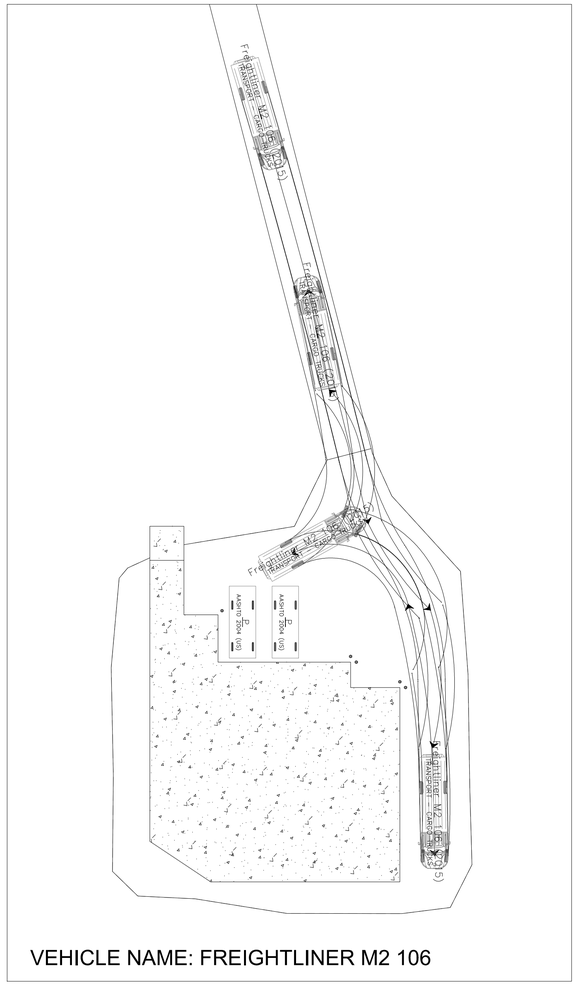

VEHICLE NAME: FREIGHTLINER M2 106

A8 C120 CRANE MOVEMENT - 41' LONG

1" = 20'

0 10 20 40 FEET

Scale: 1 INCH = 20 FEET

N

A6 C120 FIRE TRUCK MOVEMENT - 45' LONG

1" = 20'

0 10 20 40 FEET

Scale: 1 INCH = 20 FEET

N

C4 C120 PROPANE TRUCK MOVEMENT - 30' LONG

1" = 20'

0 10 20 40 FEET

Scale: 1 INCH = 20 FEET

N

FOR OFFICIAL USE ONLY

PUBLIC AVAILABILITY TO BE DETERMINED UNDER 5 USC 552

COMMONWEALTH OF VIRGINIA
MARCO PADILLA CACERES
Lic. No. 65289
9/12/2025
PROFESSIONAL ENGINEER

JACOBS
1100 N GLEBE RD.
SUITE 500
ARLINGTON, VA 22201

REV.	APPROVED DATE	DESCRIPTION	JCN	REDLINE DATE	APVD

Jacobs

DEPARTMENT OF TRANSPORTATION

FEDERAL AVIATION ADMINISTRATION

CENTRAL SERVICE REGION — FT WORTH, TX

LEEVILLE (LEV) VORTAC REPLACEMENT

TRUCK MOVEMENT PLAN

GRAND ISLE — LEEVILLE (LEV) VORTAC — LA

REVIEWED BY | SUBMITTED BY | APPROVED BY

SUBMITTER'S TITLE | APPROVER'S TITLE

LEEVILLE VORTAC

GRAND ISLE LOUISIANA

DESIGNED BY S.BUTLER

DRAWN BY S.BUTLER

CHECKED BY S. DAVIS

ISSUED BY ENGINEERING SERVICES TERMINAL

DATE 9/12/2025 JCN: 1508914

DRAWING NO. LEV - D - VORTAC - C120

REV.

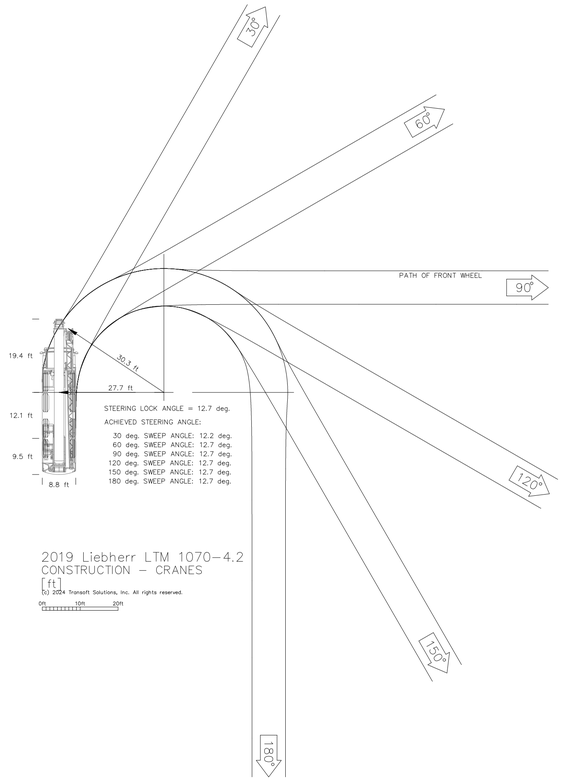

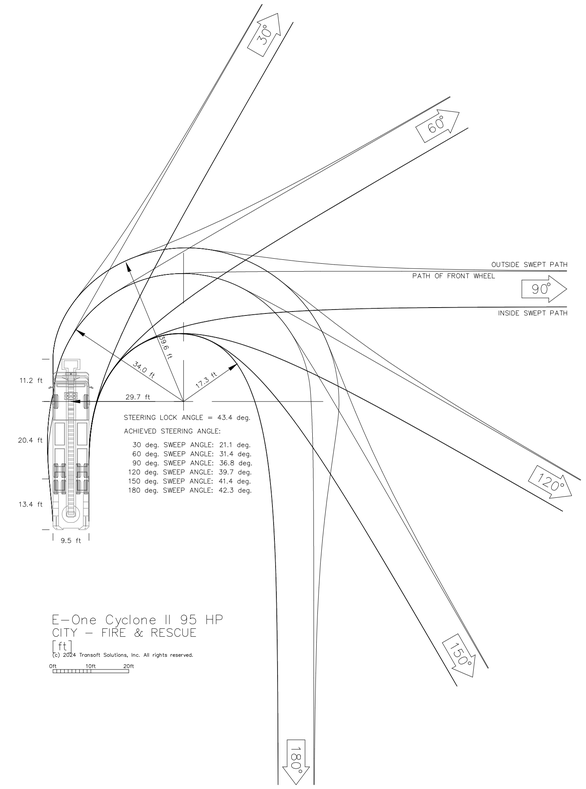

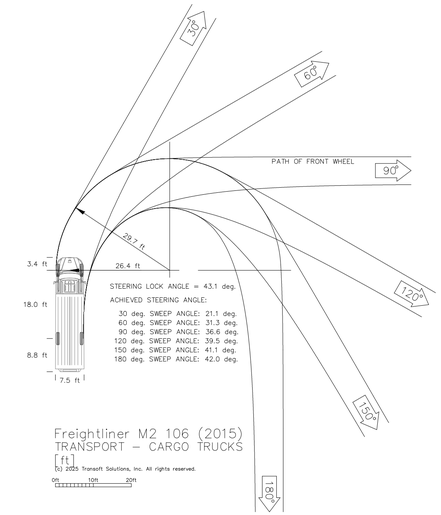

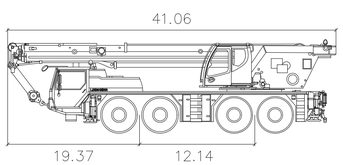

2019 Liebherr LTM 1070–4.2

	feet
Width	: 8.83
Track	: 8.84
Lock to Lock Time	: 6.0
Steering Angle	: 12.7

E–One Cyclone II 95 HP

	feet
Width	: 9.50
Track	: 9.35
Lock to Lock Time	: 6.0
Steering Angle	: 43.4

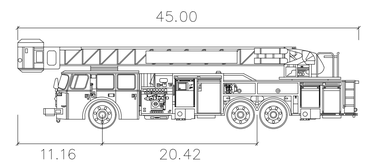

B8 C121 — 2019 LIEBHERR LTM 1070-4.2 TURNING RADIUS AND PROFILE

NTS

B5 C121 — E-ONE CYCLONE II 95 HP TURNING RADIUS AND PROFILE

NTS

C3 C121 — FREIGHTLINER M2 106 TURNING RADIUS AND PROFILE

NTS

FOR OFFICIAL USE ONLY
PUBLIC AVAILABILITY TO BE DETERMINED UNDER 5 USC 552

COMMONWEALTH OF VIRGINIA
MARCO PADILLA CACERES
Lic. No. 65289
9/12/2025
PROFESSIONAL ENGINEER

JACOBS
1100 N GLEBE RD.
SUITE 500
ARLINGTON, VA 22201

REV.	APPROVED DATE	DESCRIPTION	JCN	REDLINE DATE	APVD

Jacobs

DEPARTMENT OF TRANSPORTATION
FEDERAL AVIATION ADMINISTRATION
CENTRAL SERVICE REGION — FT WORTH, TX

LEEVILLE (LEV) VORTAC REPLACEMENT

TRUCK MOVEMENT DETAILS

GRAND ISLE — LEEVILLE (LEV) VORTAC — LA

REVIEWED BY	SUBMITTED BY	APPROVED BY
	SUBMITTER'S TITLE	APPROVER'S TITLE

LEEVILLE VORTAC
GRAND ISLE LOUISIANA

DESIGNED BY	S.BUTLER	ISSUED BY: ENGINEERING SERVICES TERMINAL	DATE 9/12/2025 — JCN: 1508914
DRAWN BY	S.BUTLER		DRAWING NO. LEV - D - VORTAC - C121 — REV.
CHECKED BY	S. DAVIS		

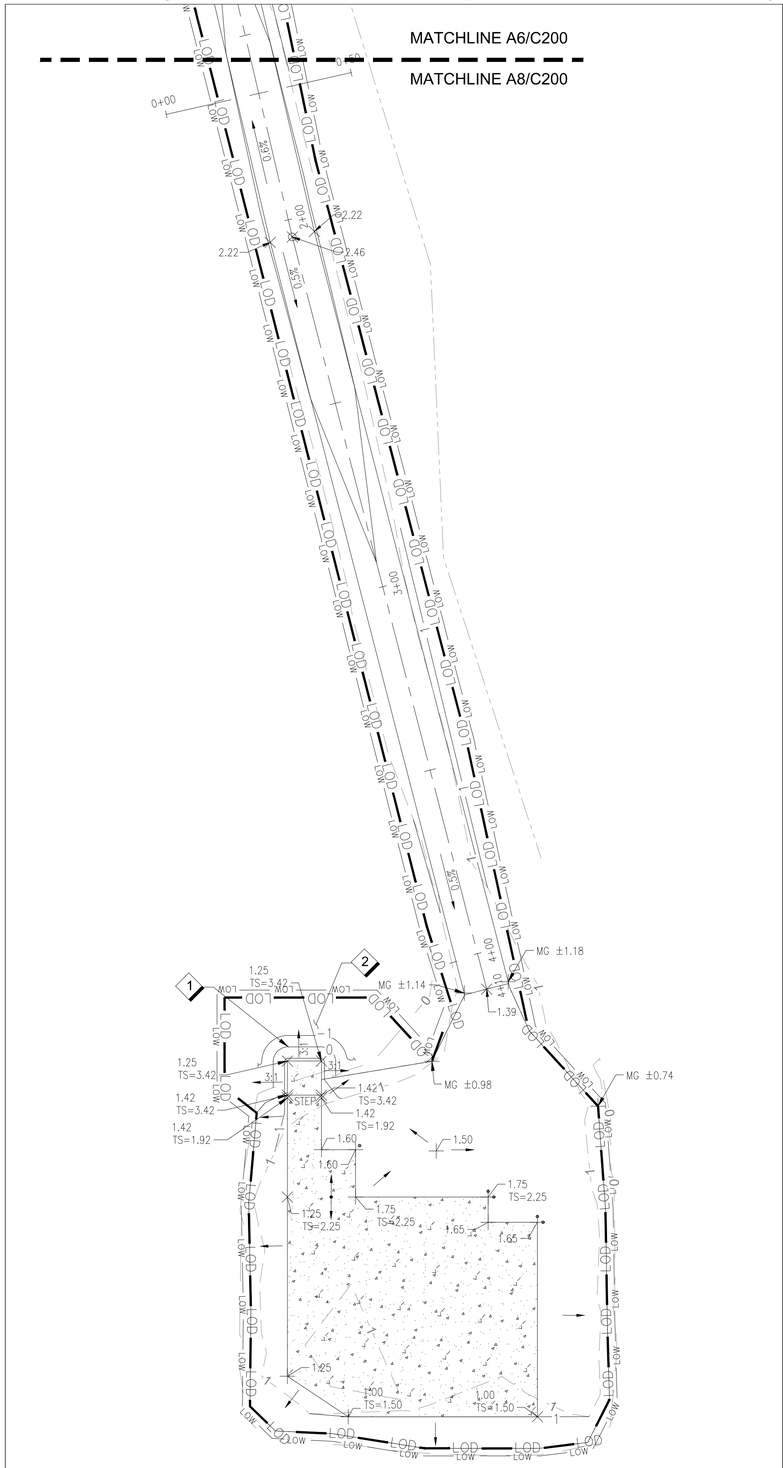

A8 C200 GRADING PLAN

1" = 20'

0 10 20 40 FEET

Scale: 1 INCH = 20 FEET

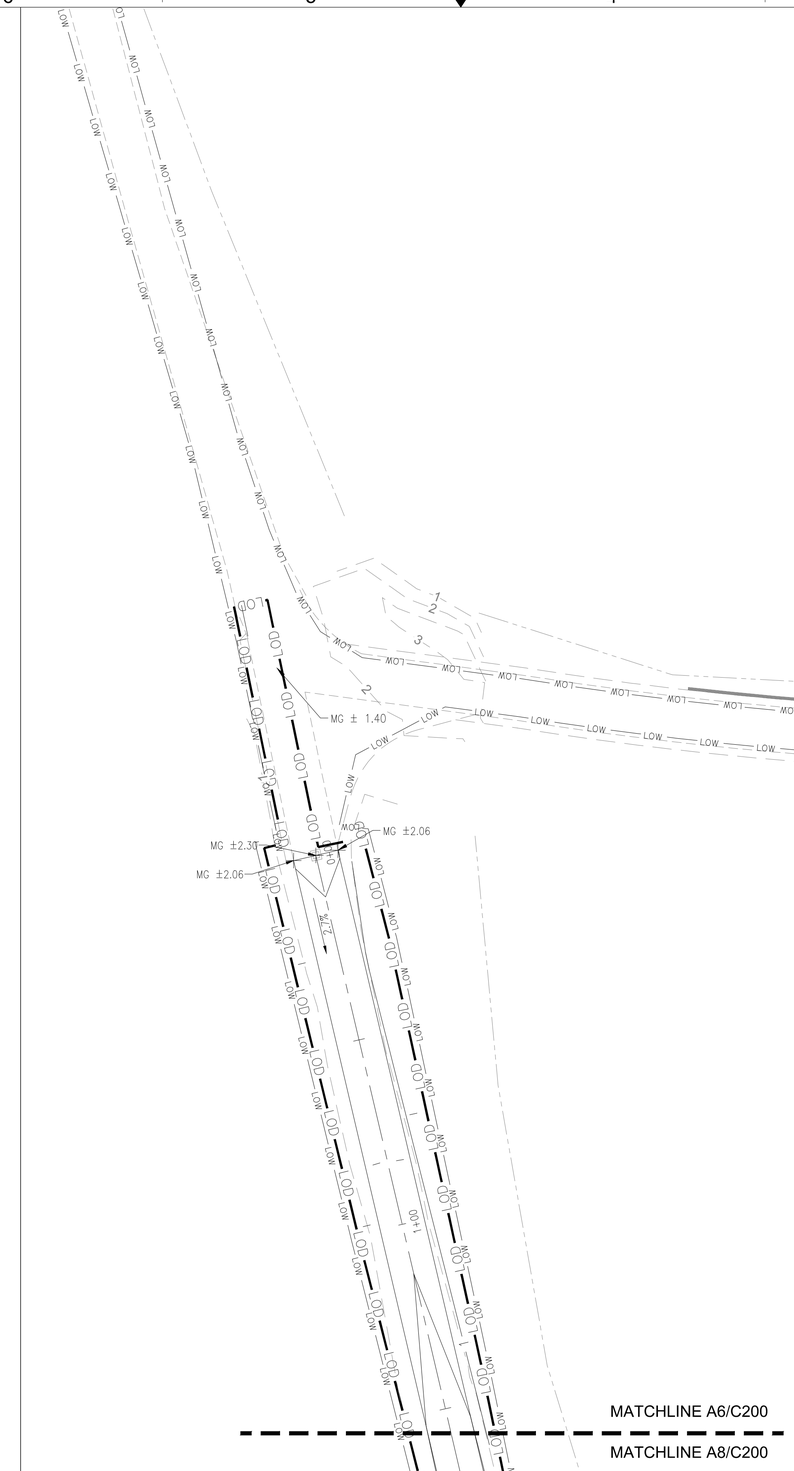

A6 C200 GRADING PLAN

1" = 20'

0 10 20 40 FEET

Scale: 1 INCH = 20 FEET

GENERAL SHEET NOTES

A. SEE SHEET C001 FOR LEGEND AND GENERAL CONSTRUCTION NOTES.

B. SPOT SHOTS SHOWN ARE AT GRADE, REFER TO ARCHITECTURAL PLANS FOR TOP OF CONCRETE FOUNDATION ELEVATIONS.

C. PROVIDE POSITIVE DRAINAGE AWAY FROM CONCRETE FOUNDATION PAD. PONDING OF WATER IS NOT ACCEPTABLE AND MUST BE CORRECTED. COORDINATE CORRECTIVE MEASURES WITH THE COR. NOTIFY THE COR OF DIFFERING CONDITIONS FOUND.

D. WETLAND DISTURBANCE OF LESS THAN 0.10 ACRES IS ANTICIPATED WITH THIS PROJECT. NO WETLAND DISTURBANCE IS PERMITTED UNTIL ALL APPLICABLE PERMITS HAVE BEEN OBTAINED.

E. GRADES BETWEEN SPOT ELEVATIONS AND BETWEEN CONTOURS HAVE A UNIFORM SLOPE UNLESS NOTED OTHERWISE.

F. LOW POINTS AND DEPRESSIONS CREATED BY DEMOLITION MUST BE FILLED IN.

SHEET NOTES

1. DAYLIGHT TO EXISTING GRADES AT 3:1.
2. ADDITIONAL TOPOGRAPHY BEYOND THE 0 ELEVATION IS NOT AVAILABLE. HOWEVER, BASED ON SITE OBSERVATIONS THE BOTTOM OF POOL ELEVATION HAS BEEN ASSESSED TO BE APPROXIMATELY BETWEEN -1 AND -2.

KEY PLAN

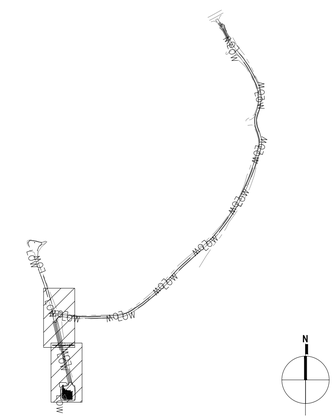

FOR OFFICIAL USE ONLY

PUBLIC AVAILABILITY TO BE DETERMINED UNDER 5 USC 552

JACOBS
1100 N GLEBE RD.
SUITE 500
ARLINGTON, VA 22201

REV.	APPROVED DATE	DESCRIPTION	JCN	REDLINE DATE	APVD

COMMONWEALTH OF VIRGINIA
MARCO PADILLA CACERES
Lic. No. 65289
9/12/2025
PROFESSIONAL ENGINEER

Jacobs

DEPARTMENT OF TRANSPORTATION
FEDERAL AVIATION ADMINISTRATION
CENTRAL SERVICE REGION — FT WORTH, TX

LEEVILLE (LEV) VORTAC REPLACEMENT

GRADING PLAN

GRAND ISLE — LEEVILLE (LEV) VORTAC — LA

REVIEWED BY | SUBMITTED BY | APPROVED BY

SUBMITTER'S TITLE | APPROVER'S TITLE

DESIGNED BY S.BUTLER
DRAWN BY S.BUTLER
CHECKED BY S. DAVIS

ISSUED BY ENGINEERING SERVICES TERMINAL

DATE 9/12/2025 JCN: 1508914

DRAWING NO. LEV - D - VORTAC - C200 REV.

LEEVILLE VORTAC
GRAND ISLE LOUISIANA

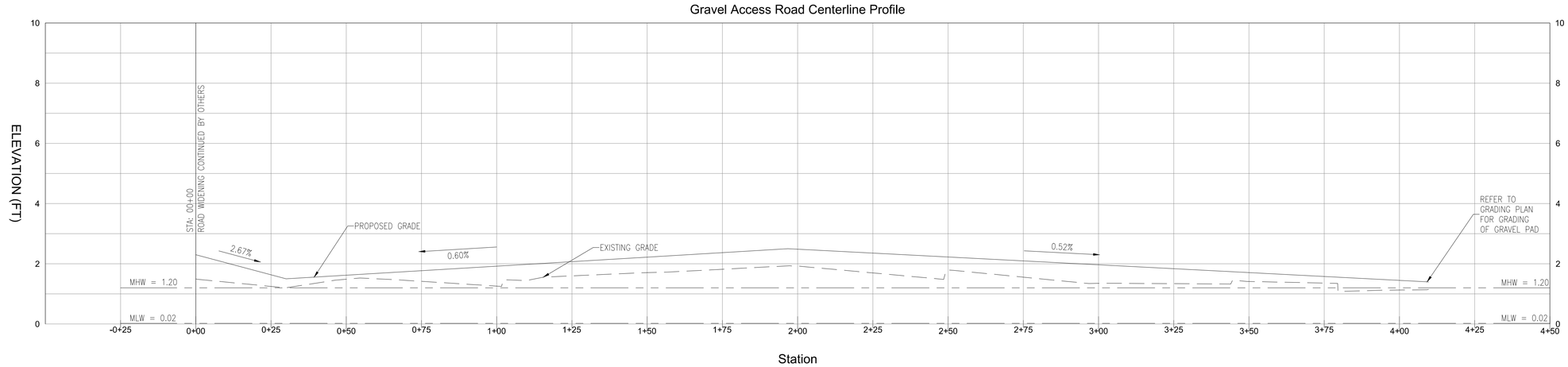

E8 GRAVEL ACCESS ROAD CENTERLINE PROFILE

C400

1" = 20'

Horizontal Scale: 1 INCH = 20 FEET

Vertical Scale: 1 INCH = 2 FEET

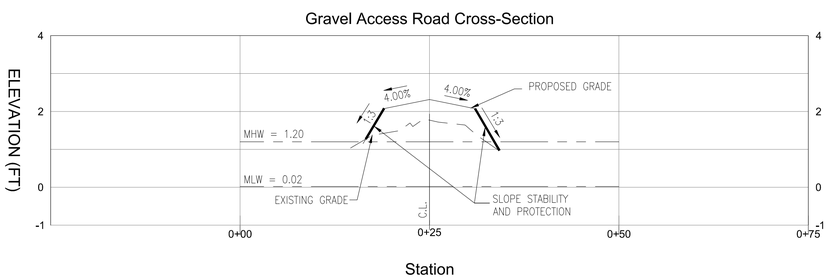

STATION 0+00 TO 4+10

C8 GRAVEL ACCESS ROAD CROSS-SECTION

C400

1" = 20'

Horizontal Scale: 1 INCH = 10 FEET

Vertical Scale: 1 INCH = 2 FEET

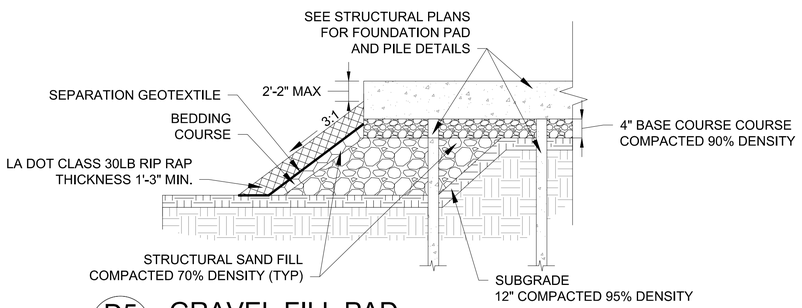

D5 GRAVEL FILL PAD

C400

NTS

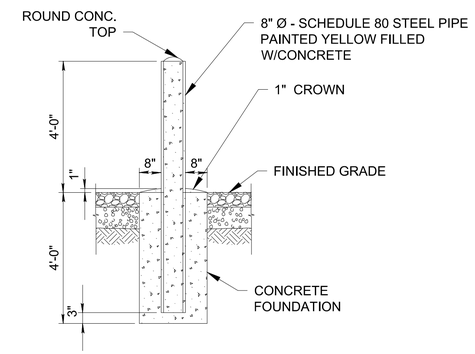

C3 CONCRETE FILLED STEEL BOLLARD

C400

NTS

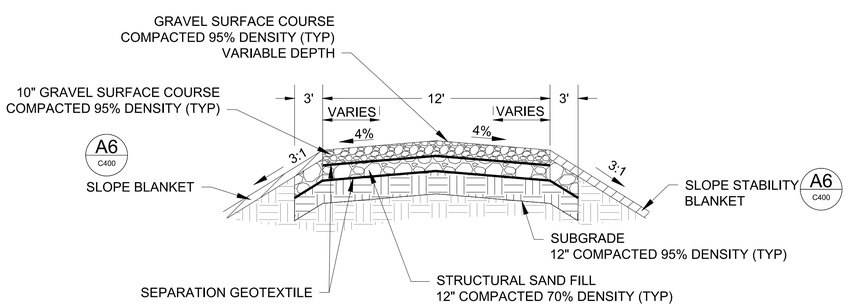

A. PROVIDE STRUCTURAL SAND FILL TO ACHIEVE GRADE 12" ABOVE ADJACENT WATER LEVELS, OR 12", WHICHEVER IS GREATER.

A8 GRAVEL ACCESS ROAD

C400

NTS

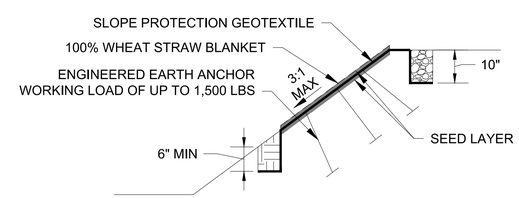

A. BURY THE SLOPE PROTECTION GEOTEXTILE DOWN SLOPE AND UP SLOPE. BURY UP SLOPE AT A DEPTH OF 10 INCHES BELOW THE GRAVEL SURFACE COURSE.

B. PROVIDE ANCHORS PER MANUFACTURER SPECIFICATIONS.

C. PROVIDE VEGETATION ESTABLISHMENT IN COORDINATION WITH CONTRACTING OFFICER.

D. PROVIDE WHEAT STRAW BLANKET TO PROTECT PERMANENT VEGETATION ESTABLISHMENT PER MANUFACTURER RECOMMENDATIONS.

A6 SLOPE STABLITY BLANKET

C400

NTS

FOR OFFICIAL USE ONLY

PUBLIC AVAILABILITY TO BE DETERMINED UNDER 5 USC 552

COMMONWEALTH OF VIRGINIA
MARCO PADILLA CACERES
Lic. No. 65289
9/12/2025
PROFESSIONAL ENGINEER

JACOBS
1100 N GLEBE RD.
SUITE 500
ARLINGTON, VA 22201

REV.	APPROVED DATE	DESCRIPTION	JCN	REDLINE DATE	APVD

DEPARTMENT OF TRANSPORTATION

FEDERAL AVIATION ADMINISTRATION

CENTRAL SERVICE REGION — FT WORTH, TX

LEEVILLE (LEV) VORTAC REPLACEMENT

PROFILES AND DETAILS

GRAND ISLE — LEEVILLE (LEV) VORTAC — LA

REVIEWED BY | SUBMITTED BY | APPROVED BY

SUBMITTER'S TITLE | APPROVER'S TITLE

DESIGNED BY S.BUTLER
DRAWN BY S.BUTLER
CHECKED BY S. DAVIS

ISSUED BY ENGINEERING SERVICES TERMINAL

DATE 9/12/2025 JCN: 1508914

DRAWING NO. LEV - D - VORTAC - C400

REV.

LEEVILLE VORTAC

GRAND ISLE LOUISIANA

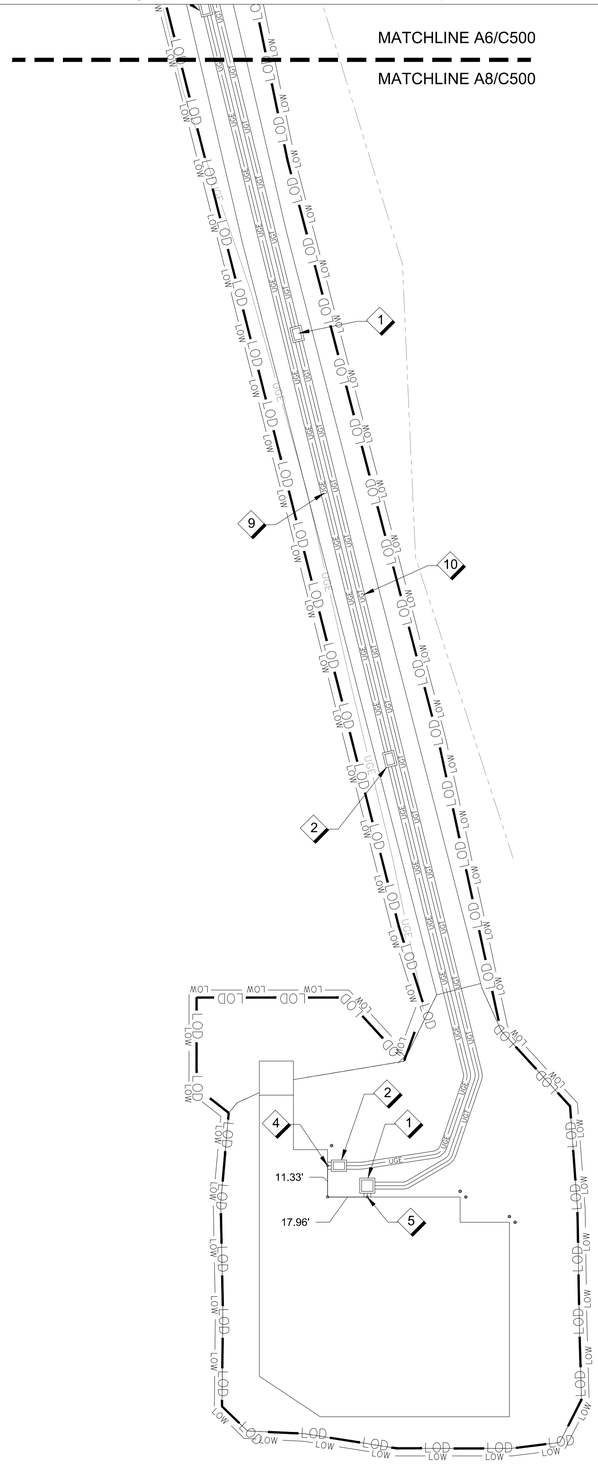

A8 C500 UTILITY PLAN

1" = 20'

0 10 20 40 FEET

Scale: 1 INCH = 20 FEET

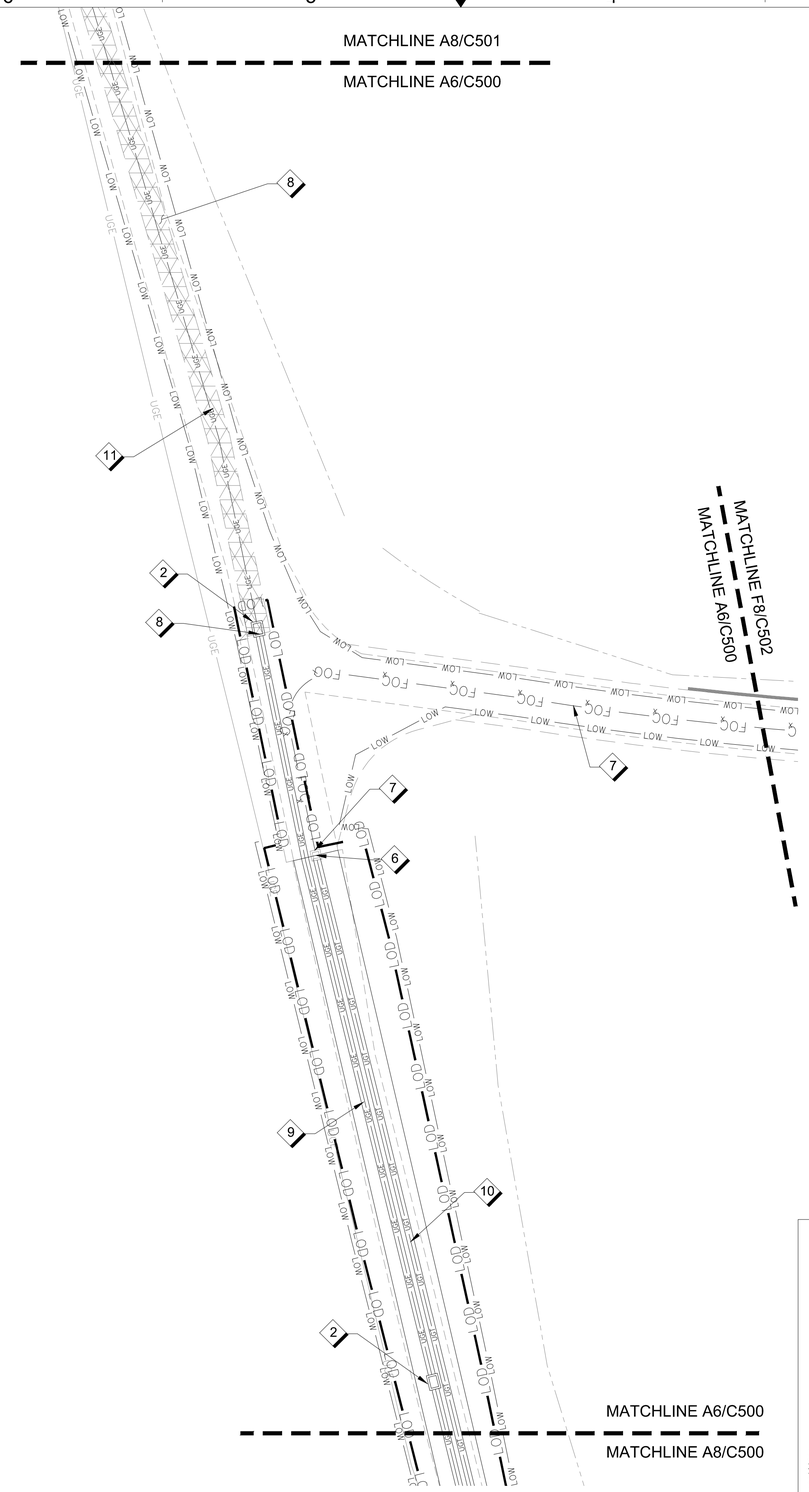

A6 C500 UTILITY PLAN

1" = 20'

0 10 20 40 FEET

Scale: 1 INCH = 20 FEET

GENERAL SHEET NOTES

LIMITS OF DIRECTIONAL BORING

KEY PLAN

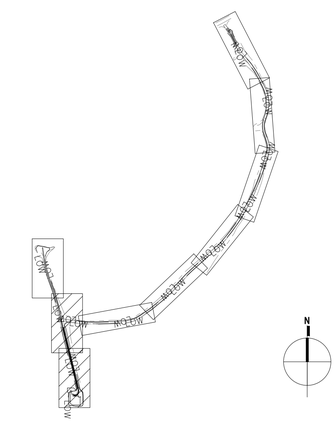

GENERAL SHEET NOTES

A. SEE SHEET C001 FOR LEGEND AND GENERAL CONSTRUCTION NOTES

B. ALL UTILITIES, UNLESS STATED OTHERWISE, MUST BE PROTECTED DURING CONSTRUCTION.

C. EXISTING ELECTRIC AND TELECOMMUNICATION CONNECTION POINTS MUST BE VERIFIED IN THE FIELD PRIOR TO CONSTRUCTION.

D. COMPLY WITH UTILITY LOCATION LAWS. CALL 811 OR MISS UTILITIES AT LEAST TEN WORKING DAYS PRIOR TO EXCAVATION.

E. PRIOR TO CONSTRUCTION DETERMINE THE EXACT LOCATION OF UTILITIES WITHIN THE LIMITS OF DISTURBANCE. REPAIR DAMAGES TO UTILITIES DAMAGED DURING CONSTRUCTION AT NO ADDITIONAL COST TO THE GOVERNMENT. IF DURING CONSTRUCTION UTILITIES OTHER THAN THOSE SHOWN HEREIN ARE DISCOVERED, IMMEDIATELY NOTIFY THE COR IN WRITING AND TAKE NECESSARY STEPS TO PROTECT THE UTILITY AND ENSURE CONTINUITY OF SERVICE. REPAIR MATERIALS AND METHODS MUST BE APPROVED BY COR.

F. WHERE UTILITIES WILL CROSS OR CONNECT TO EXISTING UTILITIES, LOCATE THE EXISTING UTILITY IN BOTH THE HORIZONTAL AND VERTICAL AND NOTIFY THE COR IN WRITING IF THE EXISTING UTILITY WILL BE IN CONFLICT WITH THE WORK.

G. EXISTING UTILITY TIE-IN LOCATIONS ARE ACTIVE UNLESS NOTED OTHERWISE. CONFIRM UTILITY TIE-IN LOCATIONS WITH THE RESPECTIVE UTILITY OWNER PRIOR TO CONSTRUCTION.

H. ADJUST EXISTING UTILITY STRUCTURE RIMS TO MEET FINAL GRADE.

I. EXCAVATE TRENCHES TO INDICATED GRADIENTS, LINES, DEPTHS, AND ELEVATIONS.

J. TAKE EXTRA CARE WHILE EXCAVATING NEAR OR WORKING IN CLOSE PROXIMITY TO EXISTING UTILITIES AND PROTECT UTILITIES THROUGHOUT CONSTRUCTIONS. HAND EXCAVATE AS NECESSARY TO AVOID POTENTIAL DAMAGE.

K. UTILIZE TRENCH BOXES AND/OR TRENCH SHEETING OR SHORING AS REQUIRED TO PROTECT EXISTING SITE FEATURES AND UTILITIES.

SHEET NOTES

1. TELECOMMUNICATION HANDHOLE (REFER TO ELECTRICAL DRAWINGS FOR HANDHOLE DETAIL)
2. ELECTRIC HANDHOLE (REFER TO ELECTRICAL DRAWINGS FOR HANDHOLE DETAIL)
3. NOT USED
4. CONNECT ELECTRICAL SERVICE TO VORTAC (REFER TO ELECTRICAL DRAWINGS FOR CONTINUATION)
5. CONNECT TELECOMMUNICATION SERVICE TO VORTAC (REFER TO ELECTRICAL DRAWINGS FOR CONTINUATION)
6. EXISTING TELECOMMUNICATION MANHOLE
7. PROVIDE UNDERGROUND TELECOMMUNICATIONS LINE. ROUTE THROUGH EXISTING FIBER OPTIC CONDUIT.
8. LIMITS OF DIRECTIONAL BORING
9. UNDERGROUND ELECTRIC DUCTBANK (REFER TO ELECTRICAL PLANS)
10. UNDERGROUND TELECOMMUNICATIONS DUCTBANK (REFER TO ELECTRICAL PLANS)
11. UNDERGROUND ELECTRIC CONDUIT (REFER TO ELECTRICAL PLANS)

FOR OFFICIAL USE ONLY

PUBLIC AVAILABILITY TO BE DETERMINED UNDER 5 USC 552

COMMONWEALTH OF VIRGINIA
MARCO PADILLA CACERES
Lic. No. 65289
9/12/2025
PROFESSIONAL ENGINEER

JACOBS
1100 N GLEBE RD.
SUITE 500
ARLINGTON, VA 22201

REV.	APPROVED DATE	DESCRIPTION	JCN	REDLINE DATE	APVD

DEPARTMENT OF TRANSPORTATION

FEDERAL AVIATION ADMINISTRATION

CENTRAL SERVICE REGION — FT WORTH, TX

LEEVILLE (LEV) VORTAC REPLACEMENT

UTILITY PLAN

GRAND ISLE — LEEVILLE (LEV) VORTAC — LA

REVIEWED BY | SUBMITTED BY | APPROVED BY

SUBMITTER'S TITLE | APPROVER'S TITLE

DESIGNED BY S.BUTLER
DRAWN BY S.BUTLER
CHECKED BY S. DAVIS

ISSUED BY ENGINEERING SERVICES TERMINAL

DATE 9/12/2025 JCN: 1508914

DRAWING NO. LEV - D - VORTAC - C500 REV.

LEEVILLE VORTAC

GRAND ISLE LOUISIANA

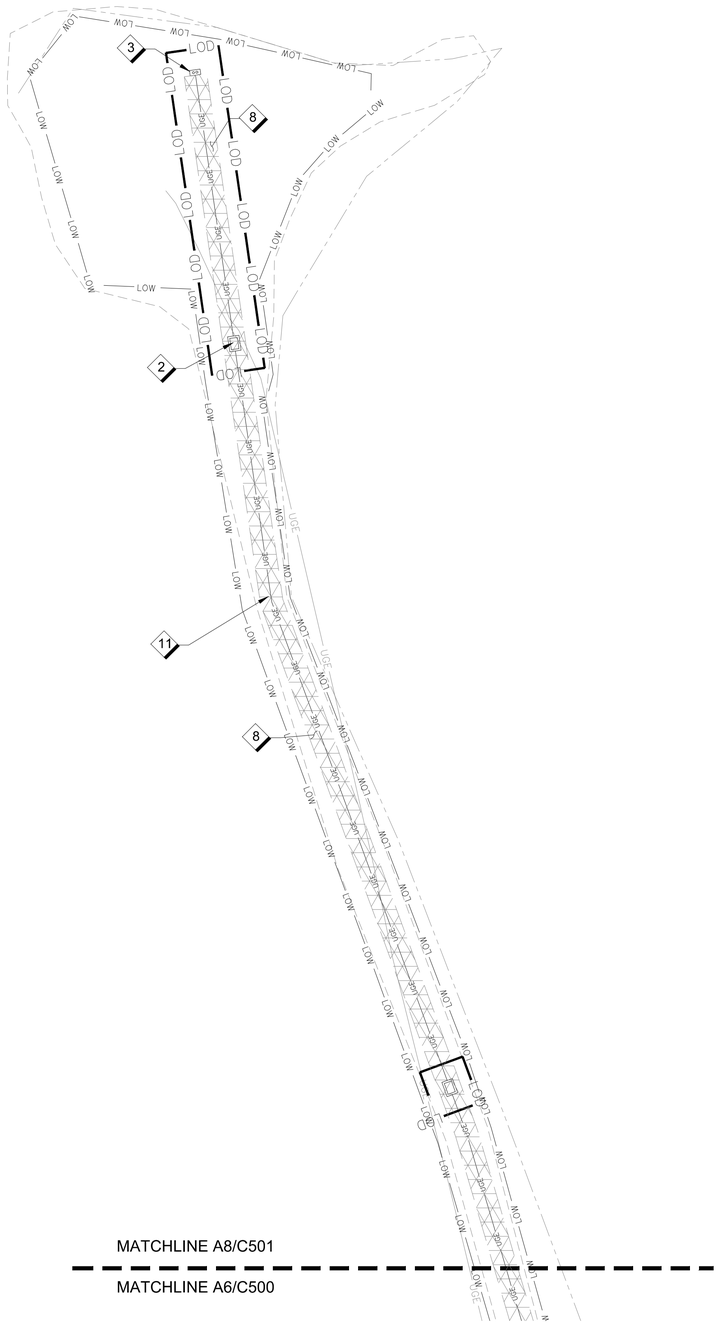

A8 C501 UTILITY PLAN

1" = 20'

0 10 20 40 FEET

Scale: 1 INCH = 20 FEET

N

GENERAL SHEET NOTES

A. SEE SHEET C001 FOR LEGEND AND GENERAL CONSTRUCTION NOTES.

B. ALL UTILITIES, UNLESS STATED OTHERWISE, MUST BE PROTECTED DURING CONSTRUCTION.

C. EXISTING ELECTRIC AND TELECOMMUNICATION CONNECTION POINTS MUST BE VERIFIED IN THE FIELD PRIOR TO CONSTRUCTION.

D. COMPLY WITH UTILITY LOCATION LAWS. CALL 811 OR MISS UTILITIES AT LEAST TEN WORKING DAYS PRIOR TO EXCAVATION.

E. PRIOR TO CONSTRUCTION DETERMINE THE EXACT LOCATION OF UTILITIES WITHIN THE LIMITS OF DISTURBANCE. REPAIR DAMAGES TO UTILITIES DAMAGED DURING CONSTRUCTION AT NO ADDITIONAL COST TO THE GOVERNMENT. IF DURING CONSTRUCTION UTILITIES OTHER THAN THOSE SHOWN HEREIN ARE DISCOVERED, IMMEDIATELY NOTIFY THE COR IN WRITING AND TAKE NECESSARY STEPS TO PROTECT THE UTILITY AND ENSURE CONTINUITY OF SERVICE. REPAIR MATERIALS AND METHODS MUST BE APPROVED BY COR.

F. WHERE UTILITIES WILL CROSS OR CONNECT TO EXISTING UTILITIES, LOCATE THE EXISTING UTILITY IN BOTH THE HORIZONTAL AND VERTICAL AND NOTIFY THE COR IN WRITING IF THE EXISTING UTILITY WILL BE IN CONFLICT WITH THE WORK.

G. EXISTING UTILITY TIE-IN LOCATIONS ARE ACTIVE UNLESS NOTED OTHERWISE. CONFIRM UTILITY TIE-IN LOCATIONS WITH THE RESPECTIVE UTILITY OWNER PRIOR TO CONSTRUCTION.

H. ADJUST EXISTING UTILITY STRUCTURE RIMS TO MEET FINAL GRADE.

I. EXCAVATE TRENCHES TO INDICATED GRADIENTS, LINES, DEPTHS, AND ELEVATIONS.

J. TAKE EXTRA CARE WHILE EXCAVATING NEAR OR WORKING IN CLOSE PROXIMITY TO EXISTING UTILITIES AND PROTECT UTILITIES THROUGHOUT CONSTRUCTIONS. HAND EXCAVATE AS NECESSARY TO AVOID POTENTIAL DAMAGE.

K. UTILIZE TRENCH BOXES AND/OR TRENCH SHEETING OR SHORING AS REQUIRED TO PROTECT EXISTING SITE FEATURES AND UTILITIES.

KEY PLAN

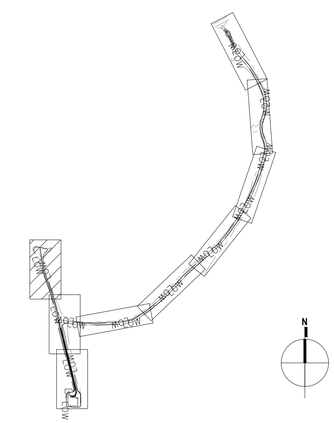

SHEET NOTES

1. NOT USED
2. ELECTRIC HANDHOLE (REFER TO ELECTRICAL DRAWINGS FOR HANDHOLE DETAIL)
3. ELECTRICAL UTILITY DEMARCATION POINT, REFER TO ELECTRICAL PLANS.
4. NOT USED
5. NOT USED
6. NOT USED
7. NOT USED
8. LIMITS OF DIRECTIONAL BORING
9. NOT USED
10. NOT USED
11. UNDERGROUND ELECTRIC CONDUIT (REFER TO ELECTRICAL PLANS)

FOR OFFICIAL USE ONLY

PUBLIC AVAILABILITY TO BE DETERMINED UNDER 5 USC 552

COMMONWEALTH OF VIRGINIA
MARCO PADILLA CACERES
Lic. No. 65289
9/12/2025
PROFESSIONAL ENGINEER

JACOBS
1100 N GLEBE RD.
SUITE 500
ARLINGTON, VA 22201

REV.	APPROVED DATE	DESCRIPTION	JCN	REDLINE DATE	APVD

Jacobs

DEPARTMENT OF TRANSPORTATION

FEDERAL AVIATION ADMINISTRATION

CENTRAL SERVICE REGION — FT WORTH, TX

LEEVILLE (LEV) VORTAC REPLACEMENT

UTILITY PLAN

GRAND ISLE — LEEVILLE (LEV) VORTAC — LA

REVIEWED BY	SUBMITTED BY	APPROVED BY
	SUBMITTER'S TITLE	APPROVER'S TITLE

LEEVILLE VORTAC

GRAND ISLE LOUISIANA

DESIGNED BY S.BUTLER
DRAWN BY S.BUTLER
CHECKED BY S. DAVIS

ISSUED BY ENGINEERING SERVICES TERMINAL

DATE 9/12/2025 JCN: 1508914

DRAWING NO. LEV - D - VORTAC - C501

REV.

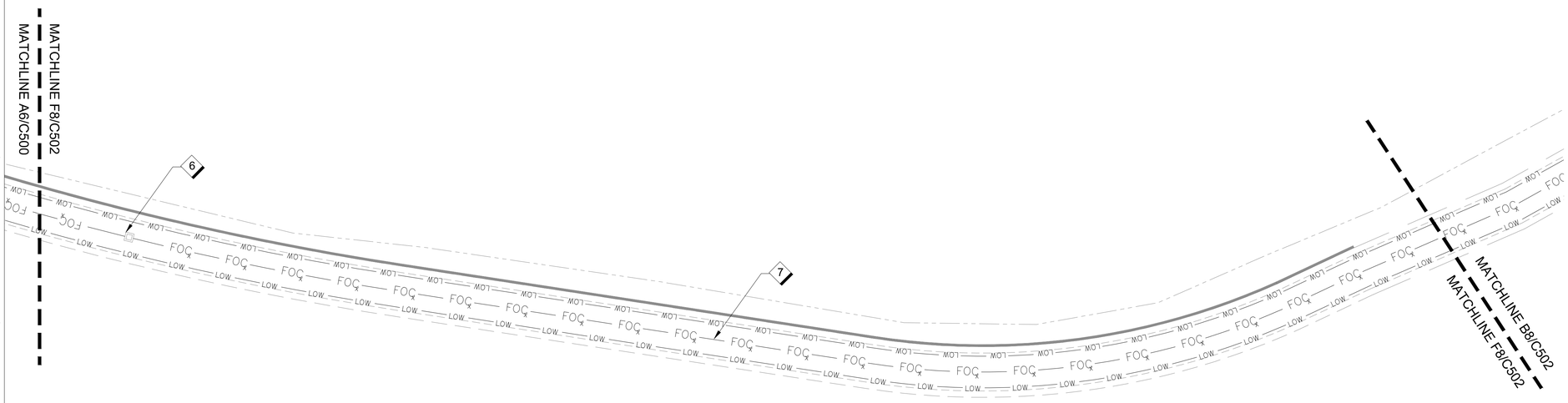

F8 C502 UTILITY PLAN

1" = 20'

0 10 20 40 FEET

Scale: 1 INCH = 20 FEET

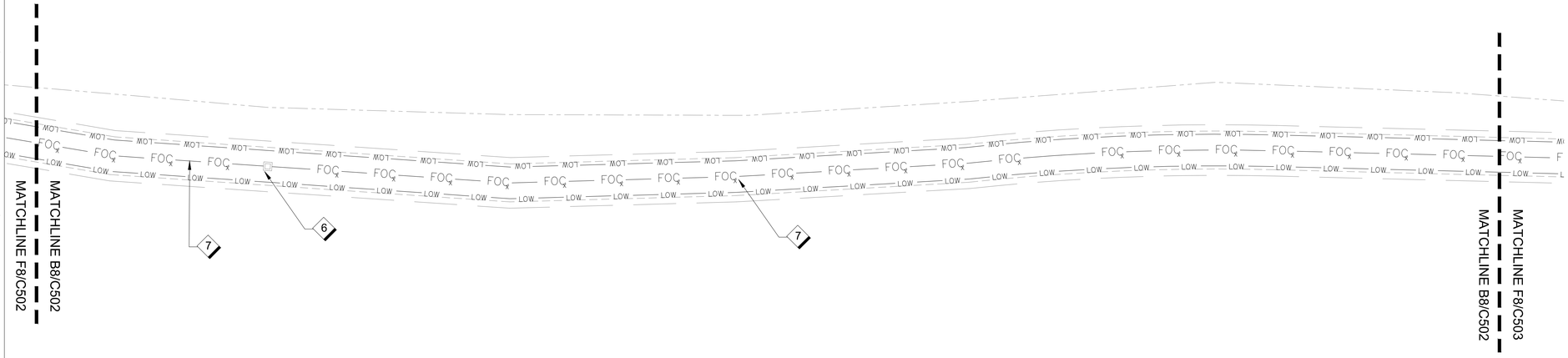

B8 C502 UTILITY PLAN

1" = 20'

0 10 20 40 FEET

Scale: 1 INCH = 20 FEET

GENERAL SHEET NOTES

A. SEE SHEET C001 FOR LEGEND AND GENERAL CONSTRUCTION NOTES.

B. ALL UTILITIES, UNLESS STATED OTHERWISE, MUST BE PROTECTED DURING CONSTRUCTION.

C. EXISTING ELECTRIC AND TELECOMMUNICATION CONNECTION POINTS MUST BE VERIFIED IN THE FIELD PRIOR TO CONSTRUCTION.

D. COMPLY WITH UTILITY LOCATION LAWS. CALL 811 OR MISS UTILITIES AT LEAST TEN WORKING DAYS PRIOR TO EXCAVATION.

E. PRIOR TO CONSTRUCTION DETERMINE THE EXACT LOCATION OF UTILITIES WITHIN THE LIMITS OF DISTURBANCE. REPAIR DAMAGES TO UTILITIES DAMAGED DURING CONSTRUCTION AT NO ADDITIONAL COST TO THE GOVERNMENT. IF DURING CONSTRUCTION UTILITIES OTHER THAN THOSE SHOWN HEREIN ARE DISCOVERED, IMMEDIATELY NOTIFY THE COR IN WRITING AND TAKE NECESSARY STEPS TO PROTECT THE UTILITY AND ENSURE CONTINUITY OF SERVICE. REPAIR MATERIALS AND METHODS MUST BE APPROVED BY COR.

F. WHERE UTILITIES WILL CROSS OR CONNECT TO EXISTING UTILITIES, LOCATE THE EXISTING UTILITY IN BOTH THE HORIZONTAL AND VERTICAL AND NOTIFY THE COR IN WRITING IF THE EXISTING UTILITY WILL BE IN CONFLICT WITH THE WORK.

G. EXISTING UTILITY TIE-IN LOCATIONS ARE ACTIVE UNLESS NOTED OTHERWISE. CONFIRM UTILITY TIE-IN LOCATIONS WITH THE RESPECTIVE UTILITY OWNER PRIOR TO CONSTRUCTION.

SHEET NOTES

1. NOT USED
2. NOT USED
3. NOT USED
4. NOT USED
5. NOT USED
6. EXISTING TELECOMMUNICATION MANHOLE
7. PROVIDE UNDERGROUND TELECOMMUNICATIONS LINE. ROUTE THROUGH EXISTING FIBER OPTIC CONDUIT.
8. NOT USED

KEY PLAN

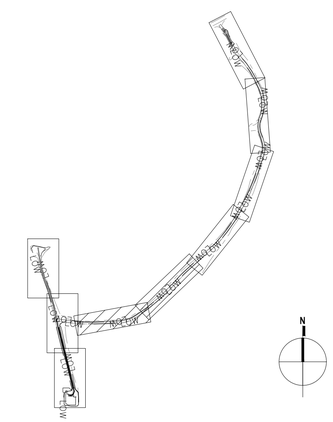

FOR OFFICIAL USE ONLY

PUBLIC AVAILABILITY TO BE DETERMINED UNDER 5 USC 552

COMMONWEALTH OF VIRGINIA
MARCO PADILLA CACERES
Lic. No. 65289
9/12/2025
PROFESSIONAL ENGINEER

JACOBS
1100 N GLEBE RD.
SUITE 500
ARLINGTON, VA 22201

REV.	APPROVED DATE	DESCRIPTION	JCN	REDLINE DATE	APVD

DEPARTMENT OF TRANSPORTATION
FEDERAL AVIATION ADMINISTRATION
CENTRAL SERVICE REGION — FT WORTH, TX

LEEVILLE (LEV) VORTAC REPLACEMENT

UTILITY PLAN

GRAND ISLE — LEEVILLE (LEV) VORTAC — LA

REVIEWED BY	SUBMITTED BY	APPROVED BY
	SUBMITTER'S TITLE	APPROVER'S TITLE

DESIGNED BY S.BUTLER
DRAWN BY S.BUTLER
CHECKED BY S. DAVIS
ISSUED BY ENGINEERING SERVICES TERMINAL
DATE 9/12/2025
JCN: 1508914
DRAWING NO. LEV - D - VORTAC - C502
REV.

LEEVILLE VORTAC
GRAND ISLE LOUISIANA

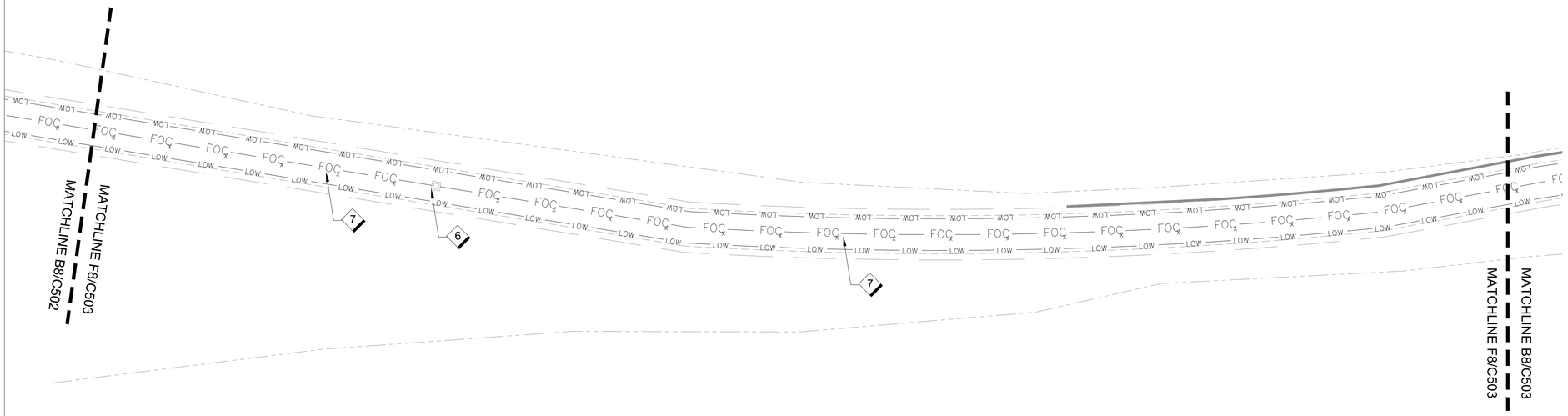

F8 C503 UTILITY PLAN

1" = 20'

0 10 20 40 FEET

Scale: 1 INCH = 20 FEET

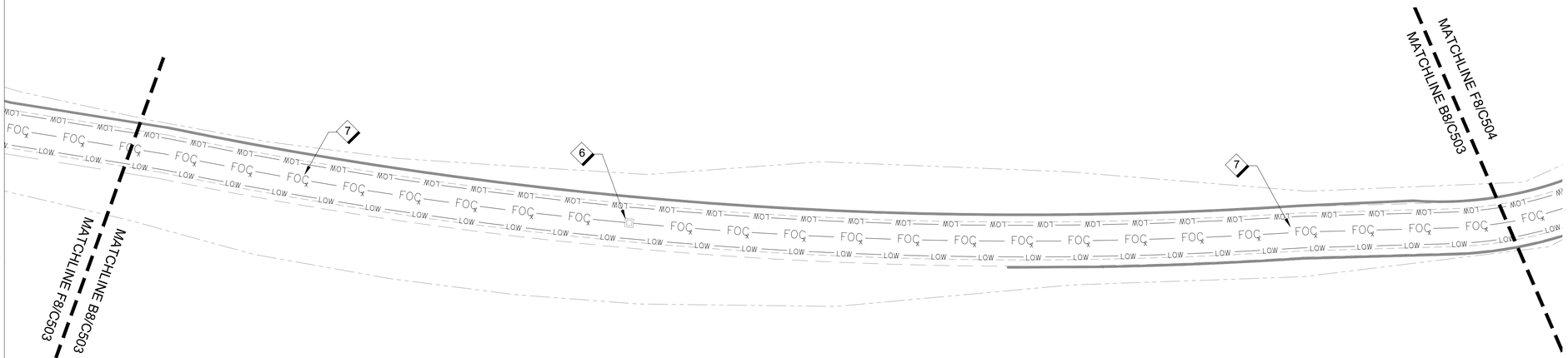

B8 C503 UTILITY PLAN

1" = 20'

0 10 20 40 FEET

Scale: 1 INCH = 20 FEET

GENERAL SHEET NOTES

A. SEE SHEET C001 FOR LEGEND AND GENERAL CONSTRUCTION NOTES.

B. ALL UTILITIES, UNLESS STATED OTHERWISE, MUST BE PROTECTED DURING CONSTRUCTION.

C. EXISTING ELECTRIC AND TELECOMMUNICATION CONNECTION POINTS MUST BE VERIFIED IN THE FIELD PRIOR TO CONSTRUCTION.

D. COMPLY WITH UTILITY LOCATION LAWS. CALL 811 OR MISS UTILITIES AT LEAST TEN WORKING DAYS PRIOR TO EXCAVATION.

E. PRIOR TO CONSTRUCTION DETERMINE THE EXACT LOCATION OF UTILITIES WITHIN THE LIMITS OF DISTURBANCE. REPAIR DAMAGES TO UTILITIES DAMAGED DURING CONSTRUCTION AT NO ADDITIONAL COST TO THE GOVERNMENT. IF DURING CONSTRUCTION UTILITIES OTHER THAN THOSE SHOWN HEREIN ARE DISCOVERED, IMMEDIATELY NOTIFY THE COR IN WRITING AND TAKE NECESSARY STEPS TO PROTECT THE UTILITY AND ENSURE CONTINUITY OF SERVICE. REPAIR MATERIALS AND METHODS MUST BE APPROVED BY COR.

F. WHERE UTILITIES WILL CROSS OR CONNECT TO EXISTING UTILITIES, LOCATE THE EXISTING UTILITY IN BOTH THE HORIZONTAL AND VERTICAL AND NOTIFY THE COR IN WRITING IF THE EXISTING UTILITY WILL BE IN CONFLICT WITH THE WORK.

G. EXISTING UTILITY TIE-IN LOCATIONS ARE ACTIVE UNLESS NOTED OTHERWISE. CONFIRM UTILITY TIE-IN LOCATIONS WITH THE RESPECTIVE UTILITY OWNER PRIOR TO CONSTRUCTION.

SHEET NOTES

1. NOT USED
2. NOT USED
3. NOT USED
4. NOT USED
5. NOT USED
6. EXISTING TELECOMMUNICATION MANHOLE
7. PROVIDE UNDERGROUND TELECOMMUNICATIONS LINE. ROUTE THROUGH EXISTING FIBER OPTIC CONDUIT.
8. NOT USED

KEY PLAN

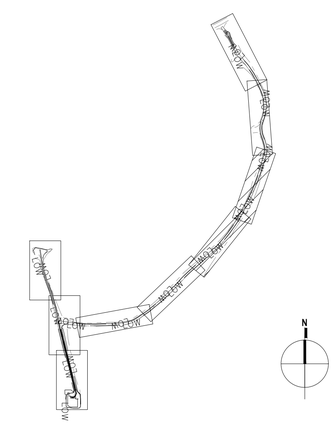

FOR OFFICIAL USE ONLY

PUBLIC AVAILABILITY TO BE DETERMINED UNDER 5 USC 552

COMMONWEALTH OF VIRGINIA
MARCO PADILLA CACERES
Lic. No. 65289
9/12/2025
PROFESSIONAL ENGINEER

JACOBS
1100 N GLEBE RD.
SUITE 500
ARLINGTON, VA 22201

REV.	APPROVED DATE	DESCRIPTION	JCN	REDLINE DATE	APVD

DEPARTMENT OF TRANSPORTATION
FEDERAL AVIATION ADMINISTRATION
CENTRAL SERVICE REGION — FT WORTH, TX

LEEVILLE (LEV) VORTAC REPLACEMENT

UTILITY PLAN

GRAND ISLE — LEEVILLE (LEV) VORTAC — LA

Jacobs

LEEVILLE VORTAC
GRAND ISLE LOUISIANA

REVIEWED BY	SUBMITTED BY	APPROVED BY
	SUBMITTER'S TITLE	APPROVER'S TITLE

DESIGNED BY S.BUTLER
DRAWN BY S.BUTLER
CHECKED BY S. DAVIS
ISSUED BY ENGINEERING SERVICES TERMINAL
DATE 9/12/2025 JCN: 1508914
DRAWING NO. LEV - D - VORTAC - C503
REV.

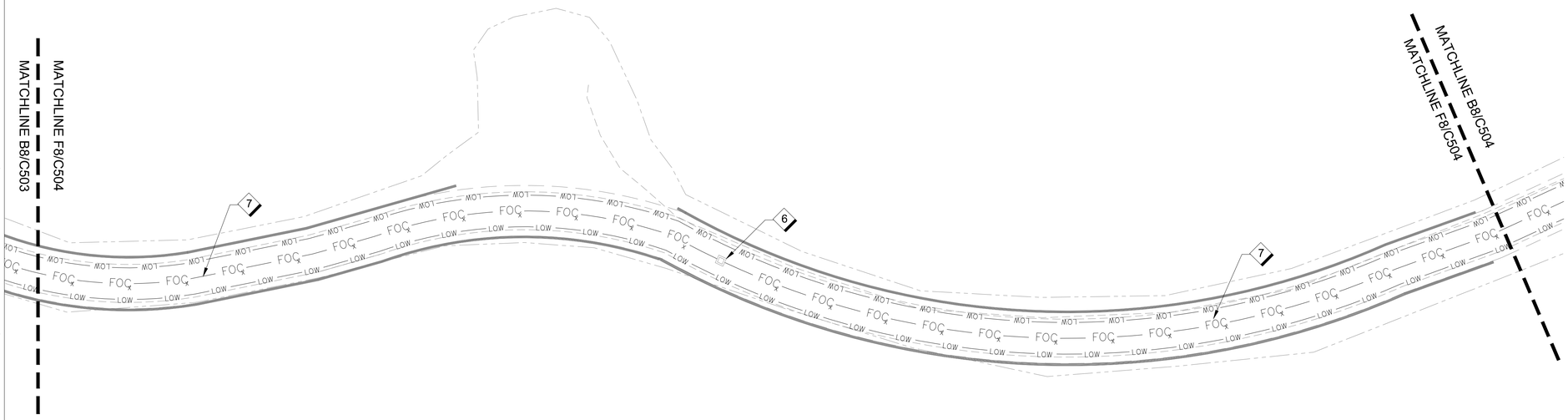

F8
C504

UTILITY PLAN

1" = 20'

0 10 20 40 FEET
Scale: 1 INCH = 20 FEET

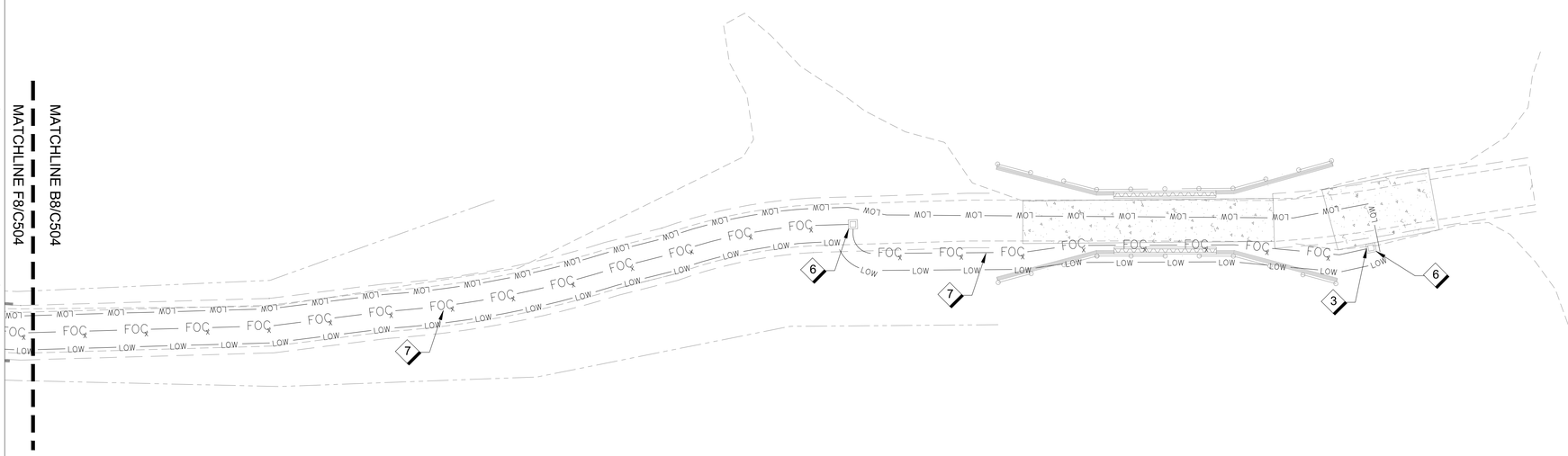

B8
C504

UTILITY PLAN

1" = 20'

0 10 20 40 FEET
Scale: 1 INCH = 20 FEET

GENERAL SHEET NOTES

A. SEE SHEET C001 FOR LEGEND AND GENERAL CONSTRUCTION NOTES.

B. ALL UTILITIES, UNLESS STATED OTHERWISE, MUST BE PROTECTED DURING CONSTRUCTION.

C. EXISTING ELECTRIC AND TELECOMMUNICATION CONNECTION POINTS MUST BE VERIFIED IN THE FIELD PRIOR TO CONSTRUCTION.

D. COMPLY WITH UTILITY LOCATION LAWS. CALL 811 OR MISS UTILITIES AT LEAST TEN WORKING DAYS PRIOR TO EXCAVATION.

E. PRIOR TO CONSTRUCTION DETERMINE THE EXACT LOCATION OF UTILITIES WITHIN THE LIMITS OF DISTURBANCE. REPAIR DAMAGES TO UTILITIES DAMAGED DURING CONSTRUCTION AT NO ADDITIONAL COST TO THE GOVERNMENT. IF DURING CONSTRUCTION UTILITIES OTHER THAN THOSE SHOWN HEREIN ARE DISCOVERED, IMMEDIATELY NOTIFY THE COR IN WRITING AND TAKE NECESSARY STEPS TO PROTECT THE UTILITY AND ENSURE CONTINUITY OF SERVICE. REPAIR MATERIALS AND METHODS MUST BE APPROVED BY COR.

F. WHERE UTILITIES WILL CROSS OR CONNECT TO EXISTING UTILITIES, LOCATE THE EXISTING UTILITY IN BOTH THE HORIZONTAL AND VERTICAL AND NOTIFY THE COR IN WRITING IF THE EXISTING UTILITY WILL BE IN CONFLICT WITH THE WORK.

G. EXISTING UTILITY TIE-IN LOCATIONS ARE ACTIVE UNLESS NOTED OTHERWISE. CONFIRM UTILITY TIE-IN LOCATIONS WITH THE RESPECTIVE UTILITY OWNER PRIOR TO CONSTRUCTION.

SHEET NOTES

1. NOT USED
2. NOT USED
3. TELECOMMUNICATIONS DEMARCATION POINT, REFER TO ELECTRICAL PLANS.
4. NOT USED
5. NOT USED
6. EXISTING TELECOMMUNICATION MANHOLE
7. PROVIDE UNDERGROUND TELECOMMUNICATIONS LINE. ROUTE THROUGH EXISTING FIBER OPTIC CONDUIT.
8. NOT USED

KEY PLAN

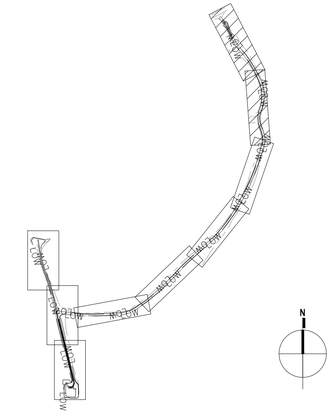

FOR OFFICIAL USE ONLY
PUBLIC AVAILABILITY TO BE DETERMINED UNDER 5 USC 552

COMMONWEALTH OF VIRGINIA
MARCO PADILLA CACERES
Lic. No. 65289
9/12/2025
PROFESSIONAL ENGINEER

JACOBS
1100 N GLEBE RD.
SUITE 500
ARLINGTON, VA 22201

REV.	APPROVED DATE	DESCRIPTION	JCN	REDLINE DATE	APVD

Jacobs

DEPARTMENT OF TRANSPORTATION
FEDERAL AVIATION ADMINISTRATION
CENTRAL SERVICE REGION — FT WORTH, TX

LEEVILLE (LEV) VORTAC REPLACEMENT

UTILITY PLAN

GRAND ISLE — LEEVILLE (LEV) VORTAC — LA

REVIEWED BY	SUBMITTED BY	APPROVED BY
	SUBMITTER'S TITLE	APPROVER'S TITLE

DESIGNED BY S.BUTLER
DRAWN BY S.BUTLER
CHECKED BY S. DAVIS

ISSUED BY ENGINEERING SERVICES TERMINAL

DATE 9/12/2025 JCN: 1508914
DRAWING NO. LEV - D - VORTAC - C504
REV.

LEEVILLE VORTAC
GRAND ISLE LOUISIANA

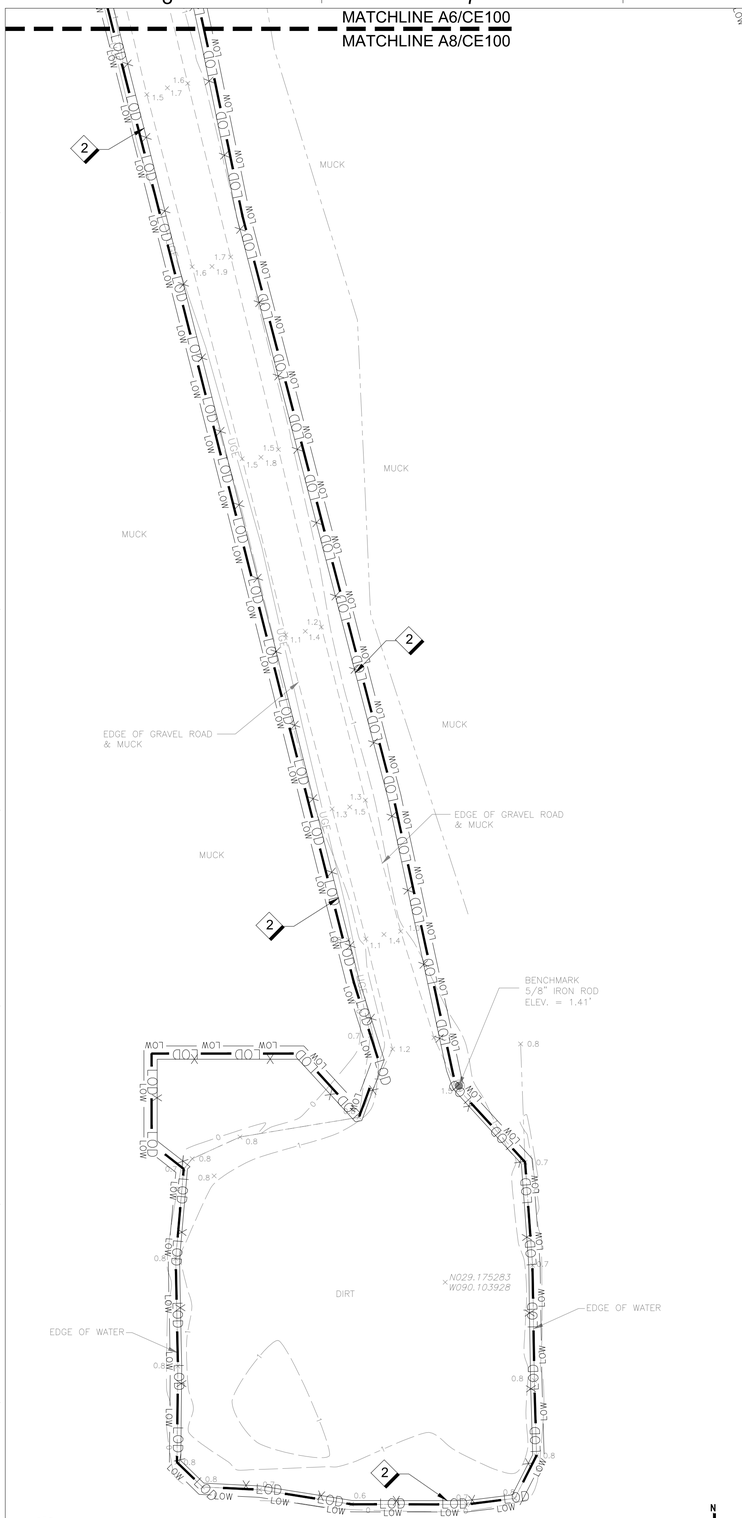

A8 EROSIONS AND SEDIMENT CONTROL PLAN PHASE I
CE100 1" = 20'
Scale: 1 INCH = 20 FEET

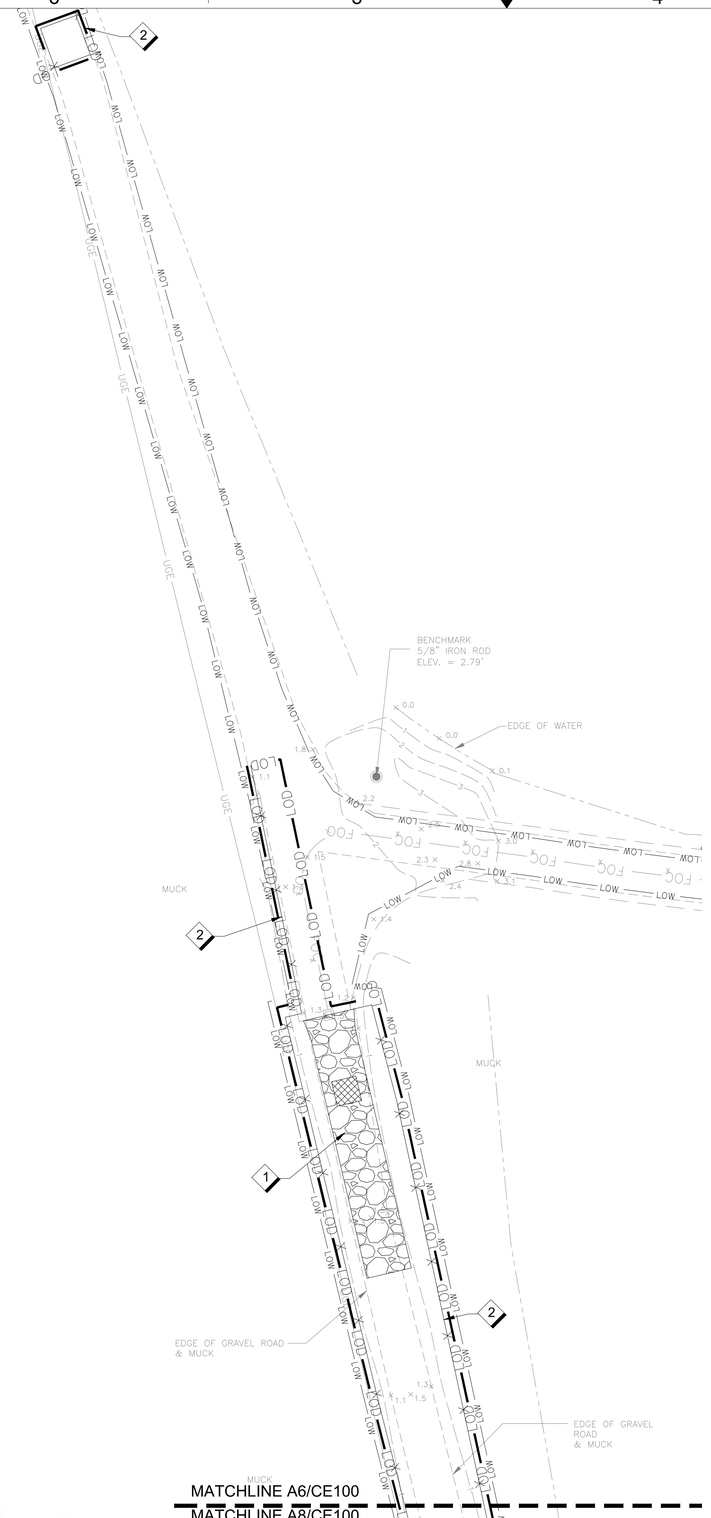

A6 EROSION AND SEDIMENT CONTROL PLAN PHASE I
CE100 1" = 20'
Scale: 1 INCH = 20 FEET

KEY PLAN

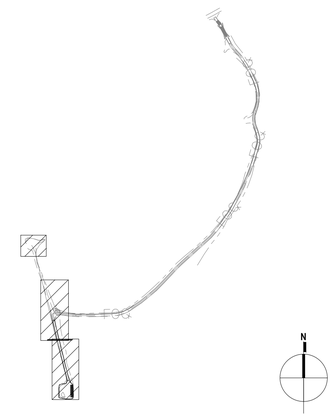

GENERAL SHEET NOTES

A. REFER TO SHEET CE500 FOR EROSION AND SEDIMENT CONTROL NOTES AND DETAILS.

B. DEMOLITION ACTIVITIES CANNOT START UNTIL EROSION AND SEDIMENT CONTROL MEASURE ARE IN PLACE AND APPROVED BY THE CONTRACTING OFFICER.

C. PROVIDE BEST MANAGEMENT PRACTICES FOR EROSION AND SEDIMENT CONTROL DURING AND AFTER THE CONSTRUCTION PHASE OF THE PROJECT INCLUDING BUT NOT LIMITED TO THE USE OF SEDIMENT/SILT FENCING, WOODEN OR VINYL BARRIERS, AND SEEDING OR SODDING OF EXPOSED OR DISTURBED AREAS.

D. EROSION AND SEDIMENT CONTROL MEASURES MUST BE CONSTRUCTED AND MAINTAINED IN ACCORDANCE WITH THE ENVIRONMENTAL PROTECTION AGENCY AND LOCAL REQUIREMENTS.

E. UTILITY CONSTRUCTION MUST ONLY BE FOR AREAS WITHIN THE DELINEATED LIMITS OF DISTURBANCE. EXCAVATE UTILITY TRENCH MATERIAL MUST BE PLACED ON THE HIGH SIDE OF THE UTILITY TRENCH. EROSION AND SEDIMENT CONTROL MEASURES MUST BE PLACED ON THE LOW SIDE OF THE TRENCH. DO NOT LEAVE EXCAVATIONS OPEN OVERNIGHT.

F. NO UNPROTECTED, DISTURBED AREA MUST DRAIN TO ROADWAY PAVEMENTS SUCH THAT THE SUBBASE, BASE OR WEARING SURFACE ARE CONTAMINATED BY SILT TRAPPED AT LOW POINTS.

G. PROVIDE STABILIZATION IN ALL DISTURBED AND DAMAGED AREAS.

SHEET NOTES

1. PROVIDE CONSTRUCTION ENTRANCE WITH WASH RACK
2. PROVIDE SILT FENCE

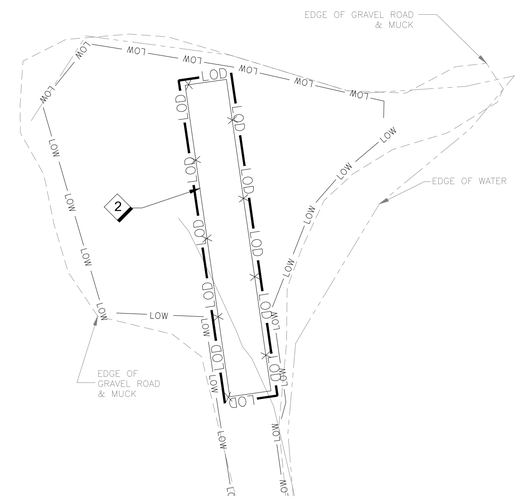

C3 EROSION AND SEDIMENT CONTROL PLAN PHASE I
CE100 1" = 20'
Scale: 1 INCH = 20 FEET

FOR OFFICIAL USE ONLY
PUBLIC AVAILABILITY TO BE DETERMINED UNDER 5 USC 552

JACOBS
1100 N GLEBE RD.
SUITE 500
ARLINGTON, VA 22201

REV.	APPROVED DATE	DESCRIPTION	JCN	REDLINE DATE	APVD

DEPARTMENT OF TRANSPORTATION
FEDERAL AVIATION ADMINISTRATION
CENTRAL SERVICE REGION — FT WORTH, TX

LEEVILLE (LEV) VORTAC REPLACEMENT

EROSION AND SEDIMENT CONTROL PLAN PHASE I

GRAND ISLE — LEEVILLE (LEV) VORTAC — LA

COMMONWEALTH OF VIRGINIA
MARCO PADILLA CACERES
Lic. No. 65289
9/12/2025
PROFESSIONAL ENGINEER

REVIEWED BY | SUBMITTED BY | APPROVED BY
SUBMITTER'S TITLE | APPROVER'S TITLE

LEEVILLE VORTAC
GRAND ISLE LOUISIANA

DESIGNED BY S.BUTLER
DRAWN BY S.BUTLER
CHECKED BY S. DAVIS
ISSUED BY ENGINEERING SERVICES TERMINAL
DATE 9/12/2025 JCN: 1508914
DRAWING NO. LEV - D - VORTAC - CE100
REV.

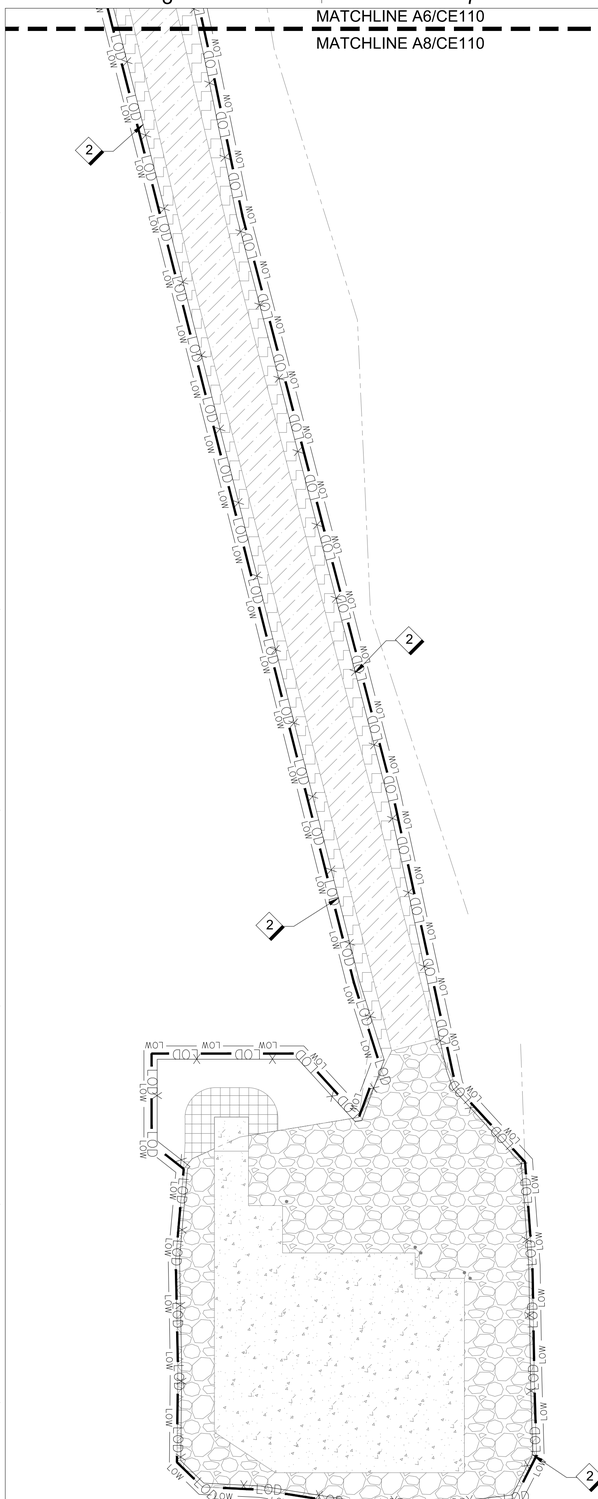

A8 C110 EROSION AND SEDIMENT CONTROL PLAN PHASE II

1" = 20'

0 10 20 40 FEET

Scale: 1 INCH = 20 FEET

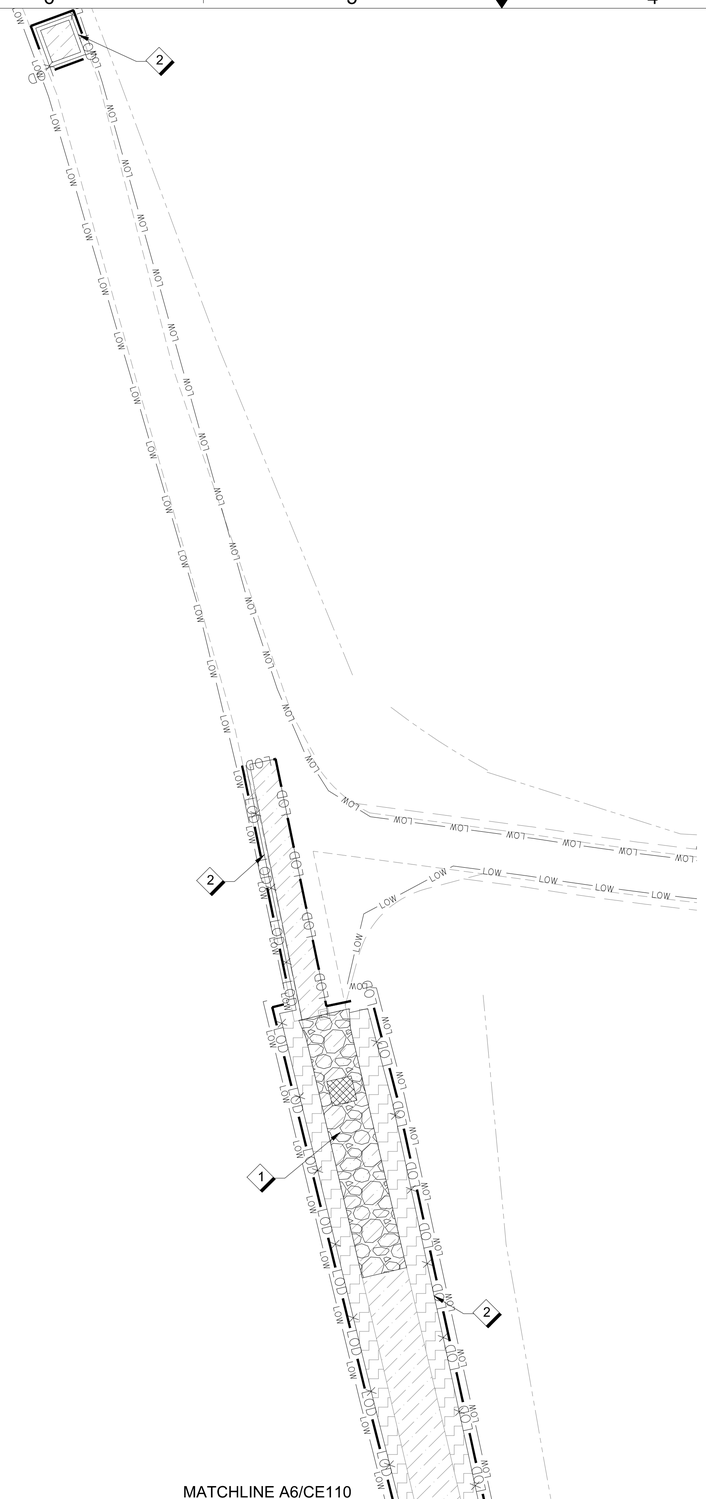

A6 C110 EROSION AND SEDIMENT CONTROL PLAN PHASE II

1" = 20'

0 10 20 40 FEET

Scale: 1 INCH = 20 FEET

KEY PLAN

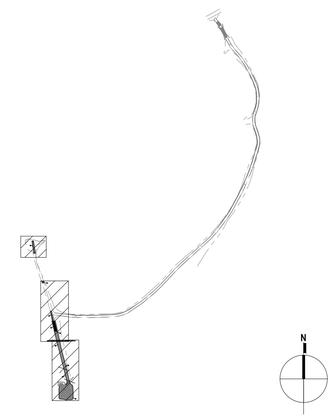

GENERAL SHEET NOTES

A. REFER TO SHEET CE500 FOR EROSION AND SEDIMENT CONTROL NOTES AND DETAILS.

B. DEMOLITION ACTIVITIES CANNOT START UNTIL EROSION AND SEDIMENT CONTROL MEASURE ARE IN PLACE AND APPROVED BY THE CONTRACTING OFFICER.

C. PROVIDE BEST MANAGEMENT PRACTICES FOR EROSION AND SEDIMENT CONTROL DURING AND AFTER THE CONSTRUCTION PHASE OF THE PROJECT INCLUDING BUT NOT LIMITED TO THE USE OF SEDIMENT/SILT FENCING, WOODEN OR VINYL BARRIERS, AND SEEDING OR SODDING OF EXPOSED OR DISTURBED AREAS.

D. EROSION AND SEDIMENT CONTROL MEASURES MUST BE CONSTRUCTED AND MAINTAINED IN ACCORDANCE WITH THE ENVIRONMENTAL PROTECTION AGENCY AND LOCAL REQUIREMENTS.

E. UTILITY CONSTRUCTION MUST ONLY BE FOR AREAS WITHIN THE DELINEATED LIMITS OF DISTURBANCE. EXCAVATE UTILITY TRENCH MATERIAL MUST BE PLACED ON THE HIGH SIDE OF THE UTILITY TRENCH. EROSION AND SEDIMENT CONTROL MEASURES MUST BE PLACED ON THE LOW SIDE OF THE TRENCH. DO NOT LEAVE EXCAVATION OPEN OVER NIGHT.

F. NO UNPROTECTED, DISTURBED AREA MUST DRAIN TO ROADWAY PAVEMENTS SUCH THAT THE SUBBASE, BASE OR WEARING SURFACE ARE CONTAMINATED BY SILT TRAPPED AT LOW POINTS.

G. PROVIDE STABILIZATION IN ALL DISTURBED AND DAMAGED AREAS.

SHEET NOTES

1. PROVIDE CONSTRUCTION ENTRANCE WITH WASH RACK
2. PROVIDE SILT FENCE

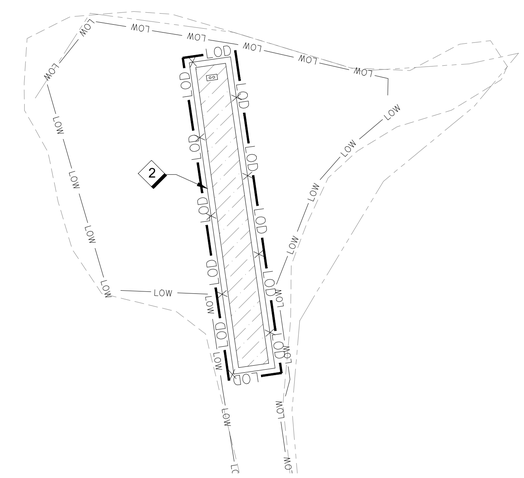

C3 C110 EROSION AND SEDIMENT CONTROL PLAN PHASE II

1" = 20'

0 10 20 40 FEET

Scale: 1 INCH = 20 FEET

N

FOR OFFICIAL USE ONLY

PUBLIC AVAILABILITY TO BE DETERMINED UNDER 5 USC 552

COMMONWEALTH OF VIRGINIA
MARCO PADILLA CACERES
Lic. No. 65289
9/12/2025
PROFESSIONAL ENGINEER

JACOBS
1100 N GLEBE RD.
SUITE 500
ARLINGTON, VA 22201

Jacobs

REV.	APPROVED DATE	DESCRIPTION	JCN	REDLINE DATE	APVD

DEPARTMENT OF TRANSPORTATION

FEDERAL AVIATION ADMINISTRATION

CENTRAL SERVICE REGION — FT WORTH, TX

LEEVILLE (LEV) VORTAC REPLACEMENT

EROSION AND SEDIMENT CONTROL PLAN PHASE II

GRAND ISLE — LEEVILLE (LEV) VORTAC — LA

REVIEWED BY	SUBMITTED BY	APPROVED BY
	SUBMITTER'S TITLE	APPROVER'S TITLE

LEEVILLE VORTAC

GRAND ISLE LOUISIANA

DESIGNED BY S.BUTLER	ISSUED BY ENGINEERING SERVICES TERMINAL	DATE 9/12/2025	JCN: 1508914
DRAWN BY S.BUTLER		DRAWING NO. LEV - D - VORTAC - CE110	REV.
CHECKED BY S. DAVIS			

INSPECTION & MAINTENANCE NOTES

SILT FENCE:

A. SILT FENCES SHALL BE INSPECTED IMMEDIATELY AFTER EACH RAINFALL AND AT LEAST DAILY DURING PROLONGED RAINFALL. ANY REQUIRED REPAIRS SHALL BE MADE IMMEDIATELY.

B. CLOSE ATTENTION SHALL BE PAID TO THE REPAIR OF DAMAGED SILT FENCE RESULTING FROM END RUNS AND UNDERCUTTING.

C. SHOULD THE FABRIC ON A SILT FENCE DECOMPOSE OR BECOME INEFFECTIVE PRIOR TO THE END OF THE EXPECTED USABLE LIFE AND THE BARRIER STILL BE NECESSARY, THE FABRIC SHALL BE REPLACED PROMPTLY.

D. SEDIMENT DEPOSITS SHOULD BE REMOVED AFTER EACH STORM EVENT. THEY MUST BE REMOVED WHEN DEPOSITS REACH APPROXIMATELY ONE-HALF THE HEIGHT OF THE BARRIER.

E. ANY SEDIMENT DEPOSITS REMAINING IN PLACE AFTER THE SILT FENCE IS NO LONGER REQUIRED SHALL BE DRESSED TO CONFORM WITH THE EXISTING GRADE, PREPARED AND SEEDED.

CONSTRUCTION ENTRANCE:

A. THE ENTRANCE MUST BE MAINTAINED IN A CONDITION WHICH WILL PREVENT TRACKING OR FLOW OF MUD ONTO ROADWAYS. THIS MAY REQUIRE PERIODIC TOP DRESSING WITH ADDITIONAL STONE OR THE WASHING AND REWORKING OF EXISTING STONE AS CONDITIONS DEMAND. MATERIAL SPILLED, DRIPPED, WASHED, OR TRACKED FROM VEHICLES ONTO ROADWAYS MUST BE REMOVED IMMEDIATELY.

INSTALLATION NOTES

SILT FENCE:

A. THE HEIGHT OF A SILT FENCE SHALL BE A MINIMUM OF 16 INCHES ABOVE THE ORIGINAL GROUND SURFACE AND SHALL NOT EXCEED 34 INCHES ABOVE GROUND ELEVATION.

B. THE FILTER FABRIC SHALL BE PURCHASED IN A CONTINUOUS ROLL CUT TO THE LENGTH OF THE BARRIER TO AVOID THE USE OF JOINTS. WHEN JOINTS ARE UNAVOIDABLE, FILTER CLOTH SHALL BE SPLICED TOGETHER ONLY AT A SUPPORT POST, WITH A MINIMUM 6-INCH OVERLAP, AND SECURELY SEALED.

C. A TRENCH SHALL BE EXCAVATED APPROXIMATELY 4-INCHES WIDE AND 4-INCHES DEEP ON THE UPSLOPE SIDE OF THE PROPOSED LOCATION OF THE MEASURE.

D. WHEN WIRE SUPPORT IS USED, STANDARD-STRENGTH FILTER CLOTH MAY BE USED. POSTS FOR THIS TYPE OF INSTALLATION SHALL BE PLACED A MAXIMUM OF 10-FEET APART (SEE PLATE 3.05-1). THE WIRE MESH FENCE MUST BE FASTENED SECURELY TO THE UPSLOPE SIDE OF THE POSTS USING HEAVY DUTY WIRE STAPLES AT LEAST ONE INCH LONG, TIE WIRES OR HOG RINGS. THE WIRE SHALL EXTEND INTO THE TRENCH A MINIMUM OF TWO INCHES AND SHALL NOT EXTEND MORE THAN 34 INCHES ABOVE THE ORIGINAL GROUND SURFACE. THE STANDARD-STRENGTH FABRIC SHALL BE STAPLED OR WIRED TO THE WIRE FENCE, AND 8 INCHES OF THE FABRIC SHALL BE EXTENDED INTO THE TRENCH.

E. WHEN WIRE SUPPORT IS NOT USED, EXTRA-STRENGTH FILTER CLOTH SHALL BE USED. POSTS FOR THIS TYPE OF FABRIC SHALL BE PLACED A MAXIMUM OF 6-FEET APART (SEE PLATE 3.05-2). THE FILTER FABRIC SHALL BE FASTENED SECURELY TO THE UPSLOPE SIDE OF THE POSTS USING ONE INCH LONG (MINIMUM) HEAVY-DUTY WIRE STAPLES OR TIE WIRES AND EIGHT INCHES OF THE FABRIC SHALL BE EXTENDED INTO THE TRENCH.

F. IF A SILT FENCE IS TO BE CONSTRUCTED ACROSS A DITCH LINE OR SWALE, THE MEASURE MUST BE OF SUFFICIENT LENGTH TO ELIMINATE ENDFLOW, AND THE PLAN CONFIGURATION SHALL RESEMBLE AN ARC OR HORSESHOE WITH THE ENDS ORIENTED UPSLOPE (SEE PLATE 3.05-2). EXTRA-STRENGTH FILTER FABRIC SHALL BE USED FOR THIS APPLICATION WITH A MAXIMUM 3-FOOT SPACING OF POSTS.

G. THE 4-INCH BY 4-INCH TRENCH SHALL BE BACKFILLED AND THE SOIL COMPACTED OVER THE FILTER FABRIC.

H. SILT FENCES SHALL BE REMOVED WHEN THEY HAVE SERVED THEIR USEFUL PURPOSE, BUT NOT BEFORE THE UPSLOPE AREA HAS BEEN PERMANENTLY STABILIZED.

CONSTRUCTION ENTRANCE:

A. TEMPORARY CONSTRUCTION ENTRANCE MUST BE PROVIDED TO ACT AS AN ENTRANCE TO THE SITE.

B. THE AREA OF THE ENTRANCE MUST BE EXCAVATED A MINIMUM OF 3 INCHES AND MUST BE CLEARED OF ALL VEGETATION AND ROOTS.

C. THE CONSTRUCTION ENTRANCE MUST BE AT A MINIMUM 70-FEET IN LENGTH, 6-INCHES DEEP, AND 12-FEET IN WIDTH.

STANDARD PRACTICES

A. PROVIDE INTERIM AND PERMANENT STABILIZATION MEASURES THAT ENSURE THAT DISTURBED PORTIONS OF THE SITE ARE STABILIZED, AND THAT EXISTING VEGETATION IS PRESERVED WHEN POSSIBLE. FINAL STABILIZATION MEASURES MAY INCLUDE BUT ARE NOT LIMITED TO ESTABLISHMENT OF PERMANENT SELF-SUSTAINING PERENNIAL VEGETATION, MULCHING, GEO-TEXTILES, SOD STABILIZATION, VEGETATIVE BUFFER STRIPS, PROTECTION OF EXISTING TREES AND MATURE VEGETATION, AND OTHER APPROPRIATE MEASURES.

B. STABILIZATION MEASURES WILL BE INITIATED IMMEDIATELY IN PORTIONS OF THE SITE WHERE CLEARING, GRADING, EXCAVATING, OR OTHER EARTH DISTURBING ACTIVITIES HAVE PERMANENTLY CEASED ON ANY PORTION OF THE SITE, OR TEMPORARILY CEASED AND WILL NOT RESUME FOR 14 DAYS. IF EARTH DISTURBING ACTIVITIES WILL RESUME WITHIN 14 DAYS, STABILIZATION MEASURES DO NOT HAVE TO BE INITIATED ON THAT PORTION OF THE SITE.

C. COMPLETE INSTALLATION OF STABILIZATION MEASURE NO LATER THAN 14 DAYS AFTER INITIATION OF SOIL STABILIZATION MEASURES.

D. ACTIVITIES THAT CONSTITUTE THE INITIATION OF STABILIZATION INCLUDE, BUT ARE NOT LIMITED TO:
- PREPPING SOIL FOR VEGETATIVE OR NON-VEGETATIVE STABILIZATION
- APPLYING MULCH OR OTHER NON-VEGETATIVE PRODUCT
- SEEDING OR PLANTING
- STARTING STABILIZATION PRACTICES ON A PORTING OF THE AREA TO BE STABILIZED
- FINALIZING ARRANGEMENTS TO HAVE STABILIZATION PRODUCT FULLY INSTALLED.

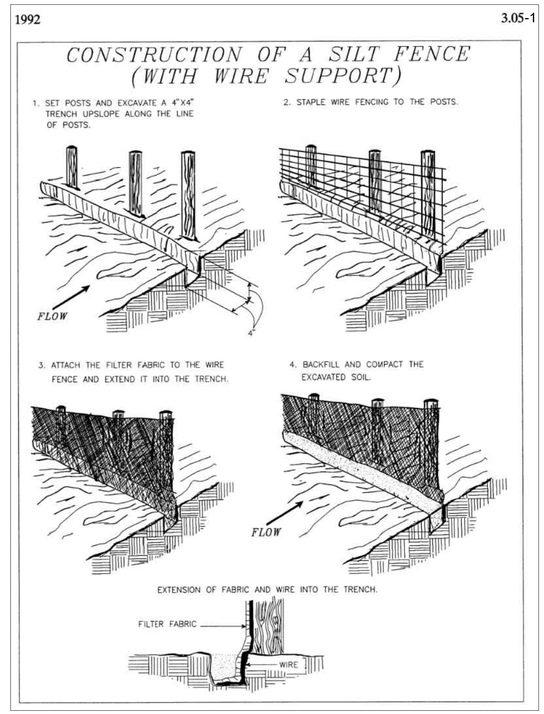

E6 CE500 TEMPORARY SILT FENCE WITH WIRE SUPPORT

NTS

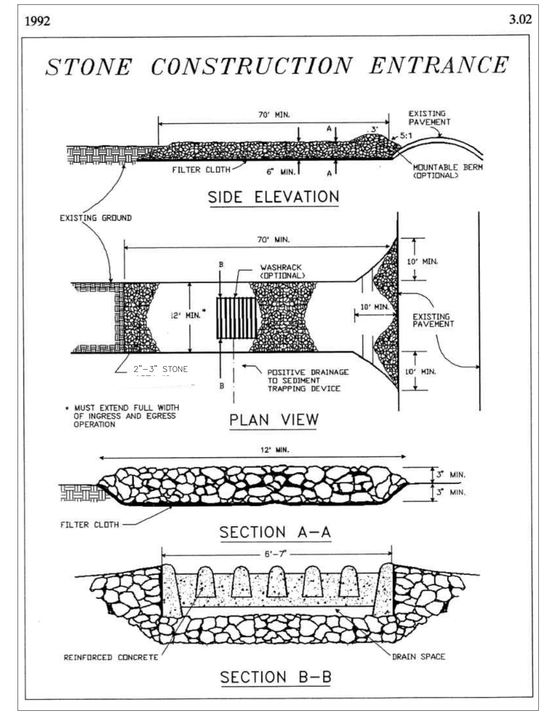

E3 CE500 TEMPORARY CONSTRUCTION ENTRANCE

NTS

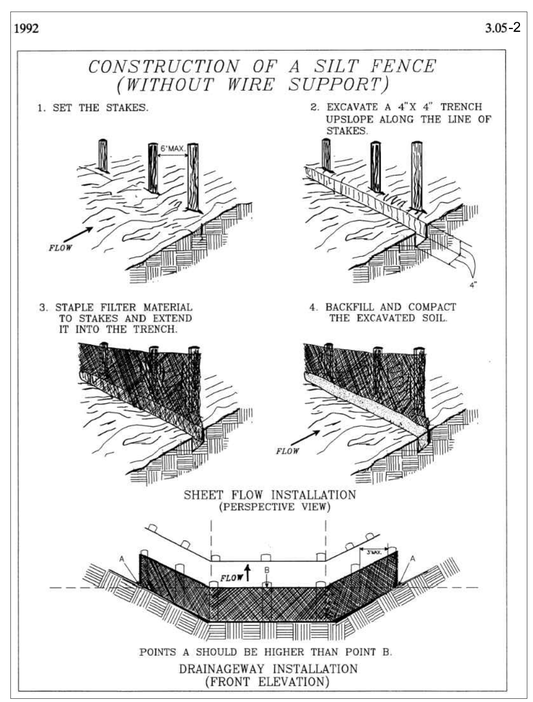

A6 CE500 TEMPORARY SILT FENCE WITHOUT WIRE SUPPORT

NTS

FOR OFFICIAL USE ONLY
PUBLIC AVAILABILITY TO BE DETERMINED UNDER 5 USC 552

REV.	APPROVED DATE	DESCRIPTION	JCN	REDLINE DATE	APVD

JACOBS
1100 N GLEBE RD.
SUITE 500
ARLINGTON, VA 22201

Jacobs

COMMONWEALTH OF VIRGINIA
MARCO PADILLA CACERES
Lic. No. 65289
9/12/2025
PROFESSIONAL ENGINEER

DEPARTMENT OF TRANSPORTATION
FEDERAL AVIATION ADMINISTRATION
CENTRAL SERVICE REGION — FT WORTH, TX

LEEVILLE (LEV) VORTAC REPLACEMENT

EROSION AND SEDIMENT CONTROL NOTES AND DETAILS

GRAND ISLE — LEEVILLE (LEV) VORTAC — LA

REVIEWED BY | SUBMITTED BY | APPROVED BY
SUBMITTER'S TITLE | APPROVER'S TITLE

LEEVILLE VORTAC
GRAND ISLE LOUISIANA

DESIGNED BY S.BUTLER
DRAWN BY S.BUTLER
CHECKED BY S. DAVIS
ISSUED BY ENGINEERING SERVICES TERMINAL
DATE 9/12/2025 JCN: 1508914
DRAWING NO. LEV - D - VORTAC - CE500
REV.

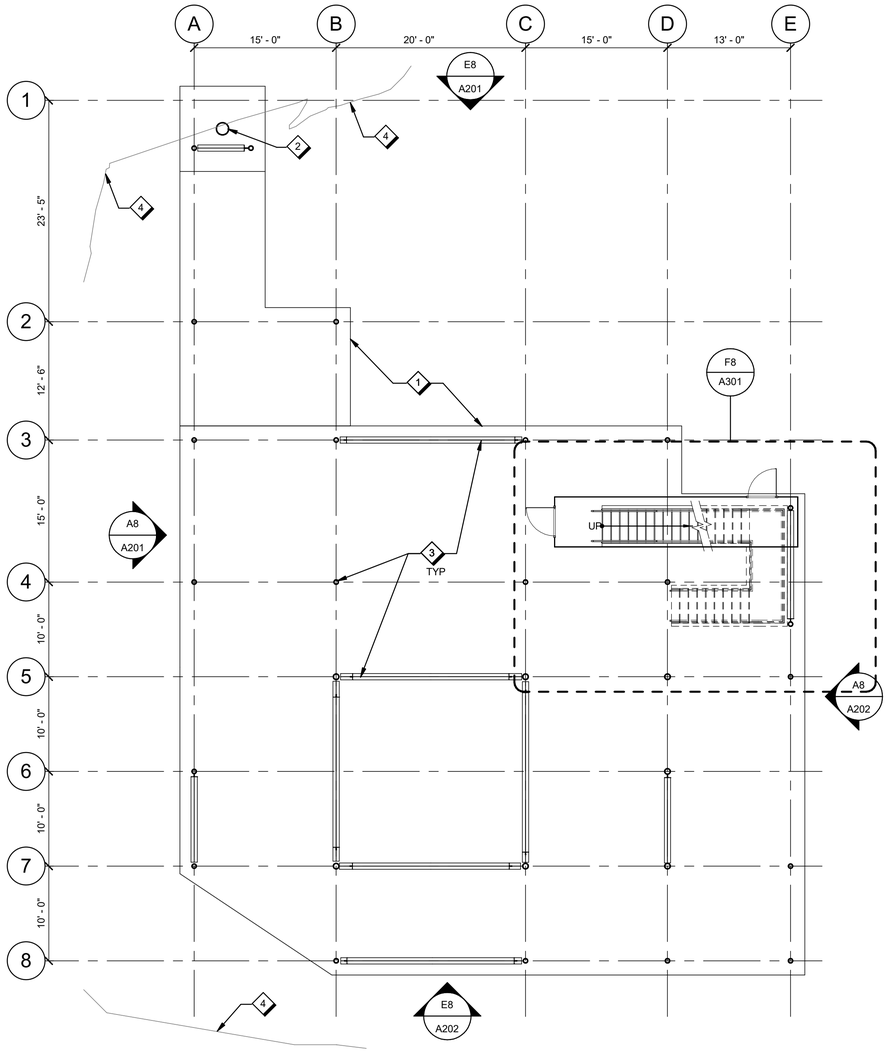

C8 OVERALL GROUND LEVEL PLAN

A101 1/8" = 1'-0"

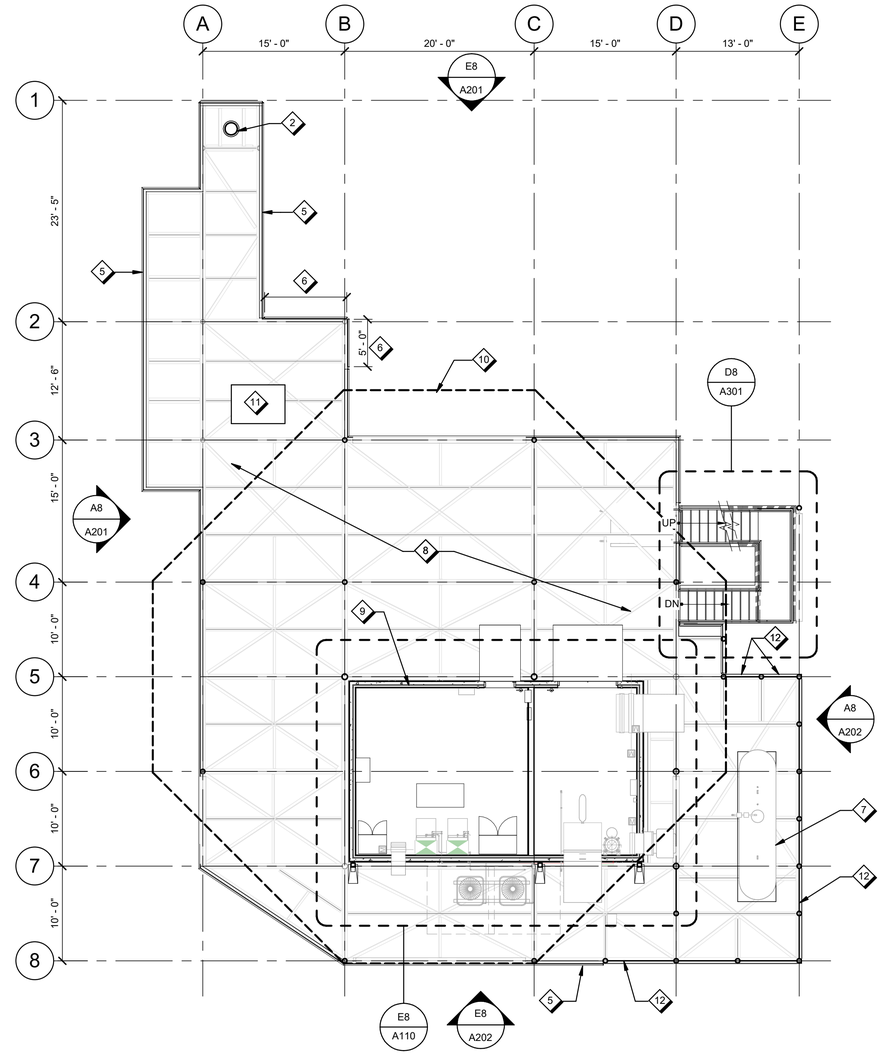

C5 OVERALL SHELTER PLATFORM PLAN

A101 1/8" = 1'-0"

SHEET NOTES

1. EDGE OF MAT FOUNDATION, REFER TO STRUCTURAL
2. TACAN MONITOR TOWER, REFER TO STRUCTURAL AND ELECTRICAL
3. PLATFORM STRUCTURE, REFER TO STRUCTURAL
4. GRAVEL/WATER EDGE, REFER TO CIVIL
5. METAL GUARDRAIL, REFER TO STRUCTURAL
6. REMOVABLE RAILING, COORDINATE WITH ELECTRICAL EQUIPMENT, REFER TO STRUCTURAL
7. MECHANICAL EQUIPMENT, REFER TO MECHANICAL
8. METAL GRATING PLATFORM DECK, REFER TO STRUCTURAL
9. PREFABRICATED EQUIPMENT SHELTER
10. COUNTERPOISE DECK ABOVE
11. ELECTRICAL EQUIPMENT, REFER TO ELECTRICAL
12. TANK ENCLOSURE, REFER TO STRUCTURAL

N

8 0 8 16

Scale: 1/8 INCH = 1 FOOT

FOR OFFICIAL USE ONLY

PUBLIC AVAILABILITY TO BE DETERMINED UNDER 5 USC 552

COMMONWEALTH OF VIRGINIA
WILLIAM MICHAEL STEVENS
Lic. No. 3484
09/12/25
ARCHITECT

JACOBS
1100 N GLEBE RD.
SUITE 500
ARLINGTON, VA 22201

REV.	APPROVED DATE	DESCRIPTION	JCN	REDLINE DATE	APVD

Jacobs

DEPARTMENT OF TRANSPORTATION

FEDERAL AVIATION ADMINISTRATION

CENTRAL SERVICE REGION — FT WORTH, TX

LEEVILLE (LEV) VORTAC REPLACEMENT

OVERALL PLANS

GRAND ISLE — LEEVILLE (LEV) VORTAC — LA

REVIEWED BY | SUBMITTED BY | APPROVED BY

SUBMITTER'S TITLE | APPROVER'S TITLE

DESIGNED BY J. HALEC

DRAWN BY J. HALEC

CHECKED BY W. STEVENS

ISSUED BY: ENGINEERING SERVICES TERMINAL

DATE 9/12/2025 JCN: 1508914

DRAWING NO. LEV - D - VORTAC - A101 REV.

LEEVILLE VORTAC
GRAND ISLE
LOUISIANA

PLOT DATE/TIME: 9/11/2025 11:07:04 AM

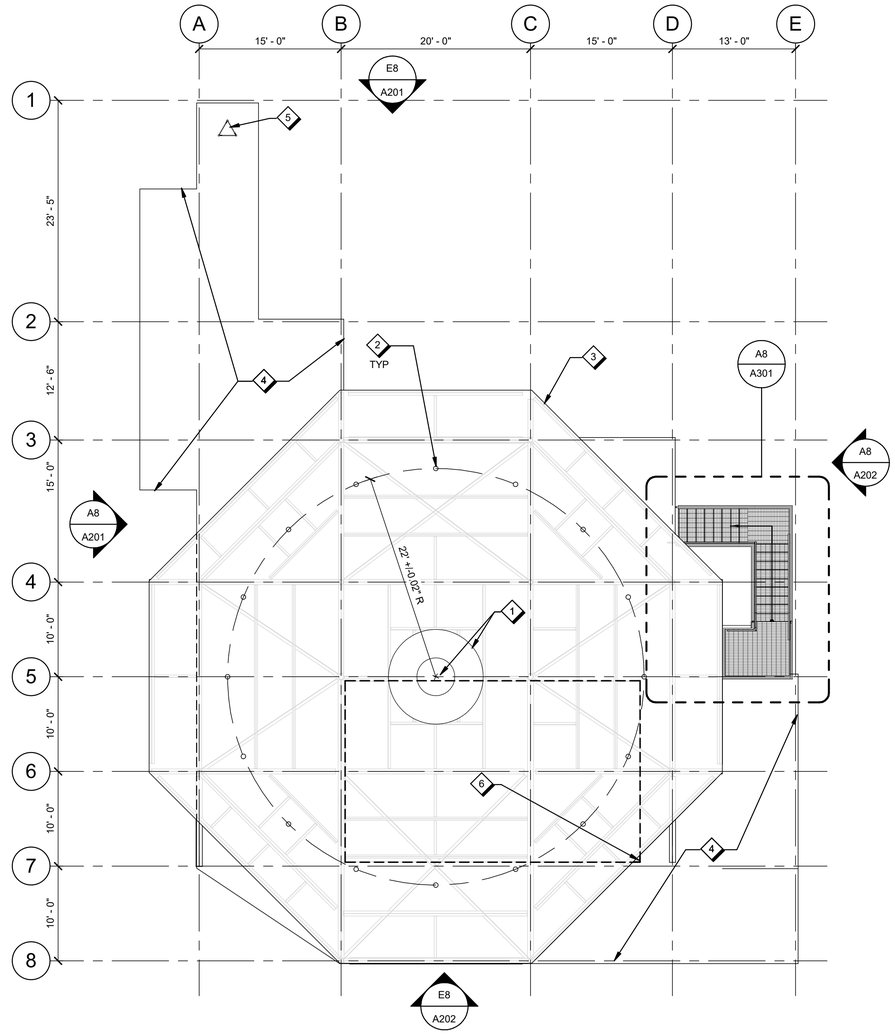

C8 / A102 OVERALL COUNTERPOISE PLAN

1/8" = 1'-0"

SHEET NOTES

1. VOR ANTENNA ASSEMBLY AND VOR ANTENNA SHELTER (GOVERNMENT FURNISHED, CONTRACTOR INSTALLED), REFER TO STRUCTURAL AND ELECTRICAL FOR ADDITIONAL INFORMATION
2. 16 ANTENNA (GOVERNMENT FURNISHED, CONTRACTOR INSTALLED) AND ANTENNA MOUNTING ASSEMBLY AT 22° 30' SPACING. FIRST ANTENNA MOUNT ALIGNED WITH MAGNETIC NORTH. REFER TO STRUCTURAL AND ELECTRICAL FOR ADDITIONAL INFORMATION
3. METAL GRATING COUNTERPOISE DECK, REFER TO STRUCTURAL
4. PLATFORM STRUCTURE BELOW
5. TACAN MONITOR TOWER, REFER TO STRUCTURAL AND ELECTRICAL
6. PREFABRICATED PRECAST CONCRETE EQUIPMENT SHELTER BELOW

N

8 0 8 16
Scale: 1/8 INCH = 1 FOOT

FOR OFFICIAL USE ONLY
PUBLIC AVAILABILITY TO BE DETERMINED UNDER 5 USC 552

JACOBS
1100 N GLEBE RD.
SUITE 500
ARLINGTON, VA 22201

REV.	APPROVED DATE	DESCRIPTION	JCN	REDLINE DATE	AP/VD

COMMONWEALTH OF VIRGINIA
WILLIAM MICHAEL STEVENS
Lic. No. 3484
09/12/25
ARCHITECT

Jacobs

DEPARTMENT OF TRANSPORTATION
FEDERAL AVIATION ADMINISTRATION
CENTRAL SERVICE REGION — FT WORTH, TX

LEEVILLE (LEV) VORTAC REPLACEMENT

OVERALL PLANS

GRAND ISLE — LEEVILLE (LEV) VORTAC — LA

LEEVILLE VORTAC
GRAND ISLE
LOUISIANA

REVIEWED BY	SUBMITTED BY	APPROVED BY
	SUBMITTER'S TITLE	APPROVER'S TITLE

DESIGNED BY: J. HALEC
DRAWN BY: J. HALEC
CHECKED BY: W. STEVENS

ISSUED BY: ENGINEERING SERVICES TERMINAL

DATE: 9/12/2025 — JCN: 1508914
DRAWING NO.: LEV - D - VORTAC - A102 — REV.

PLOT DATE/TIME: 9/11/2025 11:07:05 AM

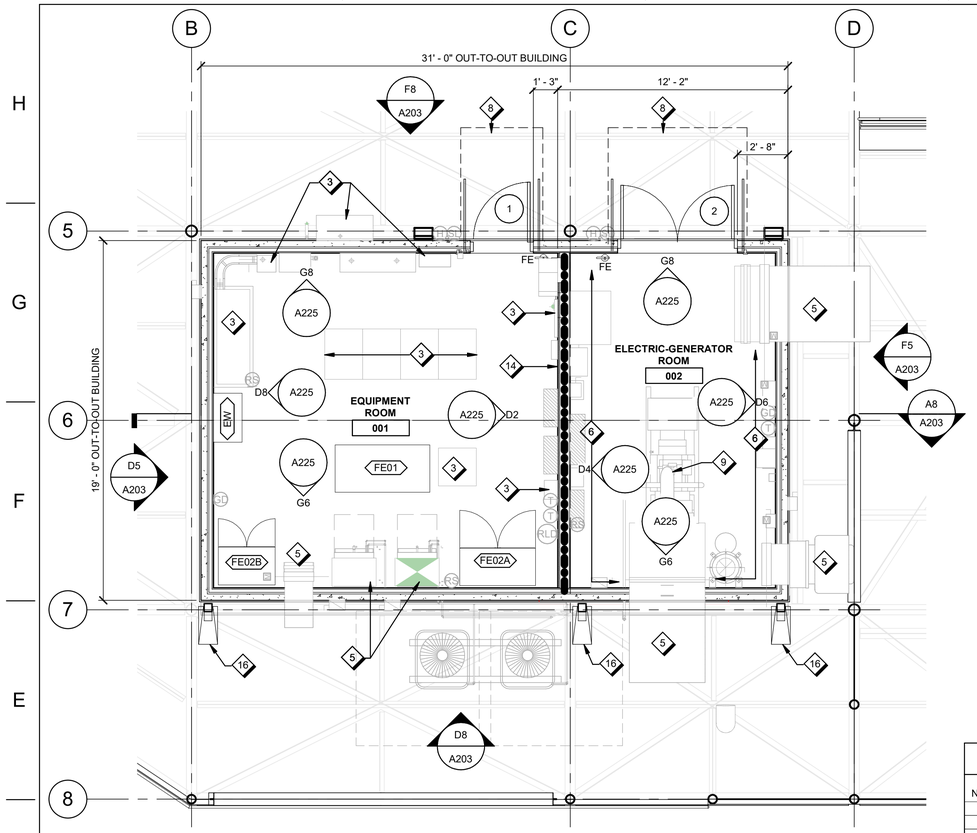

E8 EQUIPMENT SHELTER FLOOR PLAN

A110 1/4" = 1'-0"

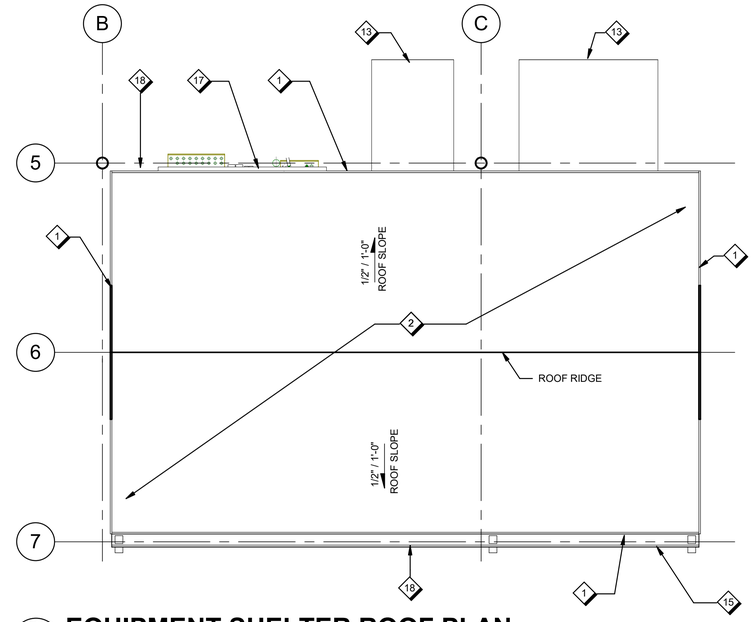

E4 EQUIPMENT SHELTER ROOF PLAN

A110 1/4" = 1'-0"

GENERAL SHEET NOTES

A. EQUIPMENT INDICATED FOR COORDINATION, REFER TO ELECTRICAL AND MECHANICAL FOR EQUIPMENT LOCATIONS

B. COORDINATE AND PROVIDE WALL OPENINGS AND SUPPORTS AS REQUIRED FOR EQUIPMENT, REFER TO ELECTRICAL AND MECHANICAL FOR ADDITIONAL INFORMATION

C. SMOKE AND FIRESTOP PENETRATIONS IN FIRE RATED WALLS

D. SEAL WEATHERTIGHT PENETRATIONS IN EXTERIOR WALLS

SHEET NOTES

1 DRIP EDGE, DE-1
2 MEMBRANE ROOFING SYSTEM
3 ELECTRICAL EQUIPMENT, REFER TO ELECTRICAL
4 CABLE TRAY, REFER TO ELECTRICAL
5 MECHANICAL EQUIPMENT, REFER TO MECHANICAL
6 REFER TO ELECTRICAL AND MECHANICAL FOR EQUIPMENT
7 CEILING SUPPORTED MECHANICAL EQUIPMENT, REFER TO STRUCTURAL FOR SUPPORT AND MECHANICAL
8 AWNING ABOVE
9 ENGINE GENERATOR, REFER TO ELECTRICAL AND MECHANICAL
10 WALL MOUNTED EQUIPMENT BELOW CEILING
11 LIGHT FIXTURE, REFER TO ELECTRICAL
12 LIGHT FIXTURE, REFER TO ELECTRICAL
13 STAINLESS STEEL AWNING
14 FIRE RATED PARTITION, REFER TO BUILDING SECTION FOR ADDITIONAL INFORMATION
15 CONTINUOUS METAL GUTTER, 8" WIDE BY 6" DEEP
16 3" X 4" METAL DOWNSPOUT ATTACHED TO STRUCTURE, WITH PLASTIC SPLASHBLOCK ATTACHED TO GRATING
17 SSTL RAIN DRIP EDGE, REFER TO A8/A225
18 ROOF EAVE

ROOM FINISH SCHEDULE

ROOM NUMBER	ROOM NAME	FLOOR FINISH	BASE FINISH	WALLS NORTH	WALLS EAST	WALLS SOUTH	WALLS WEST	CEILING FINISH	NOTES
001	EQUIPMENT ROOM	VCT	VB1	WFRP	WFRP	WFRP	WFRP	CFRP	
002	ELECTRIC-GENERATOR ROOM	VCT	VB1	PT1	PT1	PT1	PT1	PT1	

INTERIOR MATERIALS FINISH SCHEDULE

CODE	SURFACE	MATERIAL	MANUFACTURER	MODEL/STYLE	COLOR	SIZE	REMARKS
WFRP	WALL	FIBERGLASS REINFORCED PLASTIC PANELS	Marlite	Standard FRP Pebbled	WHITE	4'-0" X 10'-0" +/-	LAMINATED TO FRT PLYWOO
CFRP	CEILING	FIBERGLASS REINFORCED PLASTIC PANELS	Marlite	Standard FRP Pebbled	WHITE	2' - 0" X 2' - 0"	LAMINATED TO FRT PLYWOO
PT1	WALL	PAINT	BENJAMIN MOORE	EGGSHELL	WHITE DOWN-970	-	-
PT4	CONDUIT / PIPE	PAINT	BENJAMIN MOORE	ULTRA SPEC HP29	AS INDICATED IN SPECIFICATIONS	-	COLOR SELECTION TO BE APPROVED BY COR
VCT	FLOOR	VINYL COMPOSITE TILE	Tarkett	VCT II	AS SELECTED	1'-0" X 1'-0"	SUBMIT SAMPLES OF FULL LINE OF MANUFACTURER'S AVAILABLE COLORS FOR SELECTION BY COR
VB1	WALL BASE	VINYL BASE, COVE	Tarkett	JOHNSONITE CB,4S,4X4 W/ TOE PROFILE	AS SELECTED	4"	SUBMIT SAMPLES OF FULL LINE OF MANUFACTURER'S AVAILABLE COLORS FOR SELECTION BY COR

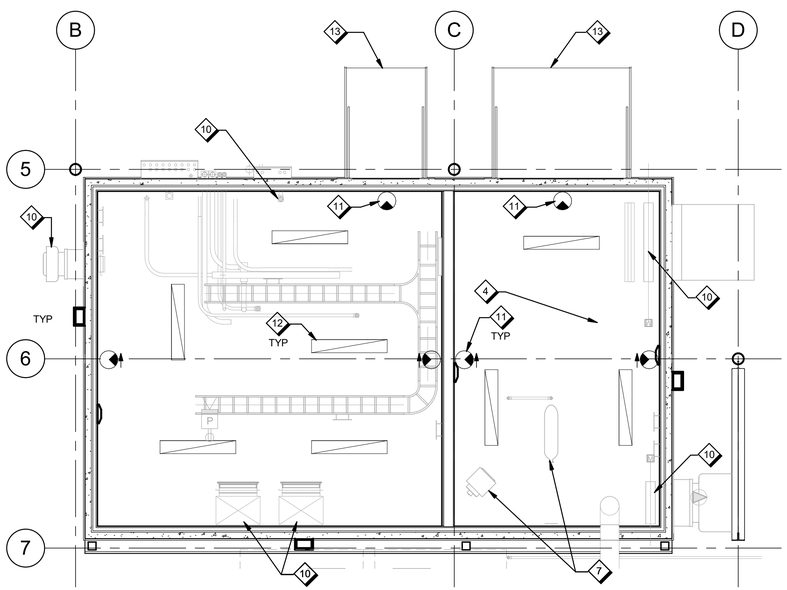

A8 EQUIPMENT SHELTER REFLECTED CEILING PLAN

A110 1/4" = 1'-0"

FURNITURE AND EQUIPMENT LIST

CODE	QUANTITY	DESRIPTION	MANUFACTURER	NOTES
FE01	1	TP WORKBENCH 60" X 30". HEIGHT ADJUSTABLE UP TO 36". GROUND KIT, ESD LAMINATE BENCH TOP, LOWER STEEL SHELF, SELF LEVELING FEET	TRESTON INC.	1
FE02A	1	SKU# 1120: PRE-ENGINEERED WELDED STEEL CABINET 82"H x 48"W x 24"D, WITH 4 ADJUSTABLE SHELVES	LYON	1,2
FE02B	1	SKU# 1115: PRE-ENGINEERED WELDED STEEL CABINET 82"H x 48"W x 24"D, WITH 4 ADJUSTABLE SHELVES	LYON	1,2
EW	1	EYE WASH: FENDALL PURE FLOW 1000	HONEYWELL	
LAD	1	PORTABLE ALUMINUM LADDER, TYPE 1AA DUTY RATING. COMPLIANT WITH OSHA 1910.23 AND ANSI ASC A14.2-2017. PROVIDE (2) OSHA 1910 COMPLIANT LADDER STABILITY VELCRO STRAPS WITH STEEL CLIP, 48" LONG AND (2) LADDER STORAGE HOOKS WITH LOCKABLE BAR.	WERNER , MT-1AA	

NOTES:

1. SUBMIT SAMPLES OF FULL LINE OF MANUFACTURER'S AVAILABLE COLORS AND FINISHES FOR SELECTION BY COR.
2. FIELD VERIFY CLEARANCES BETWEEN ELECTRICAL AND MECHANICAL EQUIPMENT, COORDINATE WITH COR.

4 0 4 8
Scale: 1/4 INCH = 1 FOOT

FOR OFFICIAL USE ONLY
PUBLIC AVAILABILITY TO BE DETERMINED UNDER 5 USC 552

COMMONWEALTH OF VIRGINIA
WILLIAM MICHAEL STEVENS
Lic. No. 3404
09/12/25
ARCHITECT

JACOBS
1100 N GLEBE RD.
SUITE 500
ARLINGTON, VA 22201

Jacobs

LEEVILLE VORTAC
GRAND ISLE
LOUISIANA

REV.	APPROVED DATE	DESCRIPTION	JCN	REDLINE DATE	APVD

DEPARTMENT OF TRANSPORTATION
FEDERAL AVIATION ADMINISTRATION
CENTRAL SERVICE REGION — FT WORTH, TX

LEEVILLE (LEV) VORTAC REPLACEMENT

EQUIPMENT SHELTER PLANS

GRAND ISLE — LEEVILLE (LEV) VORTAC — LA

REVIEWED BY | SUBMITTED BY | APPROVED BY
SUBMITTER'S TITLE | APPROVER'S TITLE
DESIGNED BY J. HALEC
DRAWN BY J. HALEC
CHECKED BY W. STEVENS
ISSUED BY: ENGINEERING SERVICES TERMINAL
DATE 9/12/2025 JCN: 1508914
DRAWING NO. LEV - D - VORTAC - A110 REV.

PLOT DATE/TIME: 9/11/2025 11:07:06 AM

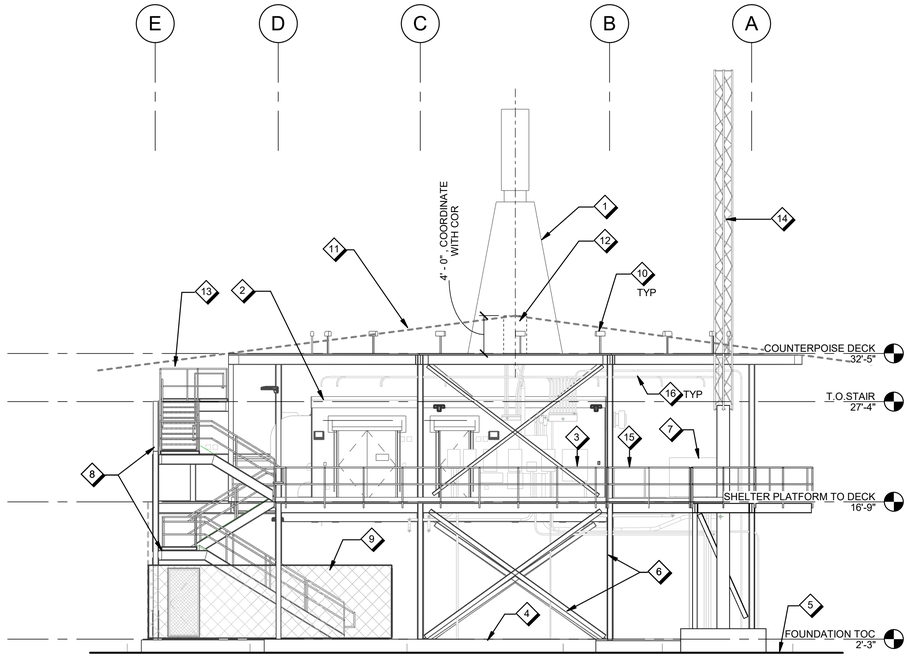

E8 EXTERIOR ELEVATION NORTH

A201 1/8" = 1'-0"

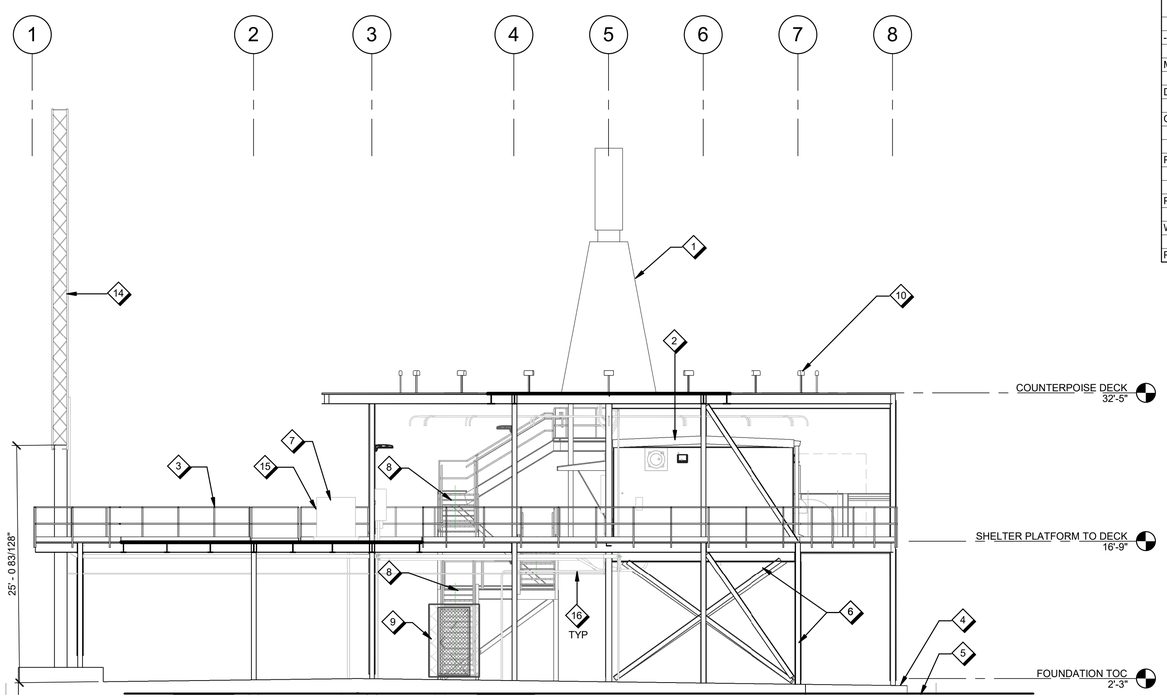

A8 EXTERIOR ELEVATION WEST

A201 1/8" = 1'-0"

SHEET NOTES

1. VOR ANTENNA SHELTER (GOVERNMENT FURNISHED, CONTRACTOR INSTALLED)
2. PRECAST CONCRETE EQUIPMENT SHELTER, PC-1
3. METAL GUARDRAIL ASSEMBLY, APPLY CTG-1 FINISH, REFER TO STRUCTURAL
4. FOUNDATION, REFER TO STRUCTURAL
5. FINISH GRADE, REFER TO CIVIL
6. PLATFORM STRUCTURE, REFER TO STRUCTURAL, APPLY CTG-1 FINISH
7. ELECTRICAL EQUIPMENT, REFER TO ELECTRICAL
8. METAL GRATING STAIR AND LANDING, REFER TO STRUCTURAL FOR ADDITIONAL INFORMATION, APPLY CTG-1 FINISH
9. WIRE MESH PARTITION ENCLOSURE (DELEGATED DESIGN)
10. ANTENNA (GOVERNMENT FURNISHED, CONTRACTOR INSTALLED) AND ANTENNA MOUNTING ASSEMBLY
11. DASHED LINE INDICATES COUNTERPOISE FIELD OF INFLUENCE. COORDINATE WITH ELECTRICAL AND COR.
12. VOR ANTENNA, REFER TO ELECTRICAL FOR ADDITIONAL INFORMATION
13. TOP OF STAIR ASSEMBLY MUST NOT EXTEND BEYOND COUNTERPOISE FIELD OF INFLUENCE.
14. TACAN MONITOR TOWER, REFER TO STRUCTURAL AND ELECTRICAL
15. REMOVABLE RAILING, PAINT CTG-1, COORDINATE WITH ELECTRICAL EQUIPMENT, REFER TO STRUCTURAL, THE MAXIMUM GAP BETWEEN FIXED AND REMOVABLE POSTS IS 4" CLEAR
16. REFER TO ELECTRICAL FOR ROUTING OF ELECTRICAL EQUIPMENT

EXTERIOR MATERIALS FINISH SCHEDULE

CODE	MATERIAL	BASIS OF DESIGN		
		COLOR	MANUFACTURER	REMARKS
-	SEALANT	MATCH ADJACENT DARKER COLOR	-	TYPICAL, UON
MTL-1	SHELTER JOINT METAL FLASHING	STAINLESS STEEL	-	
DE-1	DRIP EDGE	STAINLESS STEEL	-	
CTG-1	HIGH PERFORMANCE COATING	TBD	RUST BULLET	FINAL COLOR SELECTION TO BE APPROVED BY COR
PMA-1	PRE-ENGINEERED METAL AWNING	STAINLESS STEEL	-	
PC-1	PRECAST CONCRETE EQUIPMENT SHELTER	TBD	-	FINAL CONCRETE FINISH AND COLOR SELECTION TO BE APPROVED BY COR
WH	WEATHER HOOD	COLOR TO MATCH PT-EX1		
PT-EX1	PAINT	TBD	BENJAMIN MOORE	FINAL COLOR SELECTION TO BE APPROVED BY COR

8 0 8 16
Scale: 1/8 INCH = 1 FOOT

FOR OFFICIAL USE ONLY
PUBLIC AVAILABILITY TO BE DETERMINED UNDER 5 USC 552

JACOBS
1100 N GLEBE RD.
SUITE 500
ARLINGTON, VA 22201

REV.	APPROVED DATE	DESCRIPTION	JCN	REDLINE DATE	APVD

COMMONWEALTH OF VIRGINIA
WILLIAM MICHAEL STEVENS
Lic. No. 0404
09/12/25
ARCHITECT

Jacobs

DEPARTMENT OF TRANSPORTATION
FEDERAL AVIATION ADMINISTRATION
CENTRAL SERVICE REGION — FT WORTH, TX

LEEVILLE (LEV) VORTAC REPLACEMENT

EXTERIOR ELEVATIONS AND EXTERIOR MATERIALS FINISH SCHEDULE

GRAND ISLE — LEEVILLE (LEV) VORTAC — LA

REVIEWED BY | SUBMITTED BY | APPROVED BY
SUBMITTER'S TITLE | APPROVER'S TITLE

LEEVILLE VORTAC
GRAND ISLE
LOUISIANA

DESIGNED BY J. HALEC
DRAWN BY J. HALEC
CHECKED BY W. STEVENS
ISSUED BY ENGINEERING SERVICES TERMINAL
DATE 9/12/2025 JCN: 1508914
DRAWING NO. LEV - D - VORTAC - A201
REV.

PLOT DATE/TIME: 9/11/2025 11:07:08 AM

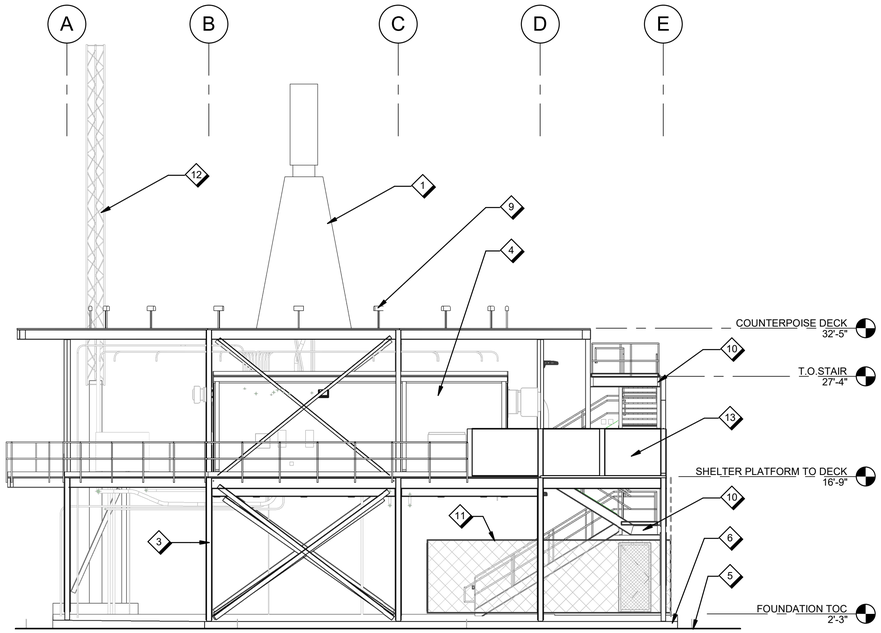

E8 / A202 EXTERIOR ELEVATION SOUTH

1/8" = 1'-0"

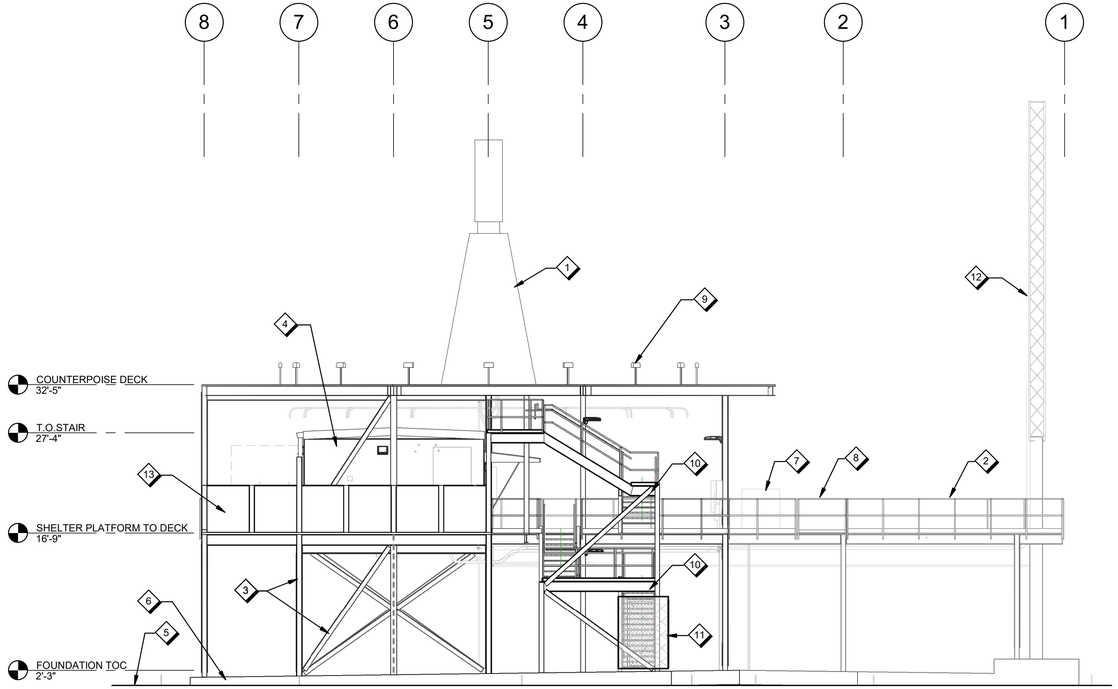

A8 / A202 EXTERIOR ELEVATION EAST

1/8" = 1'-0"

GENERAL SHEET NOTES

A. REFER TO A201 FOR EXTERIOR FINISH COLOR SELECTION, UON

SHEET NOTES

1	VOR ANTENNA SHELTER (GOVERNMENT FURNISHED, CONTRACTOR INSTALLED)
2	METAL GUARDRAIL ASSEMBLY, APPLY CTG-1 FINISH, REFER TO STRUCTURAL
3	PLATFORM STRUCTURE, REFER TO STRUCTURAL, APPLY CTG-1 FINISH
4	PRECAST CONCRETE EQUIPMENT SHELTER, PC-1
5	FINISH GRADE, REFER TO CIVIL
6	FOUNDATION, REFER TO STRUCTURAL
7	TRANSFORMER, REFER TO ELECTRICAL
8	REMOVABLE RAILING, PAINT CTG-1, COORDINATE WITH ELECTRICAL EQUIPMENT, REFER TO STRUCTURAL, THE MAXIMUM GAP BETWEEN FIXED AND REMOVABLE POSTS IS 4" CLEAR
9	ANTENNA (GOVERNMENT FURNISHED, CONTRACTOR INSTALLED) AND ANTENNA MOUNTING ASSEMBLY
10	METAL GRATING STAIR AND LANDING, REFER TO STRUCTURAL FOR ADDITIONAL INFORMATION
11	WIRE MESH PARTITION ENCLOSURE (DELEGATED DESIGN)
12	TACAN MONITOR TOWER, REFER TO STRUCTURAL AND ELECTRICAL
13	TANK ENCLOSURE, PAINT GTC-1, REFER TO STRUCTURAL

8 0 8 16
Scale: 1/8 INCH = 1 FOOT

FOR OFFICIAL USE ONLY
PUBLIC AVAILABILITY TO BE DETERMINED UNDER 5 USC 552

COMMONWEALTH OF VIRGINIA
GILLIAN MICHAEL STEVENS
Lic. No. 3484
09/12/25
ARCHITECT

JACOBS
1100 N GLEBE RD.
SUITE 500
ARLINGTON, VA 22201

Jacobs

REV.	APPROVED DATE	DESCRIPTION	JCN	REDLINE DATE	APVD

DEPARTMENT OF TRANSPORTATION
FEDERAL AVIATION ADMINISTRATION
CENTRAL SERVICE REGION — FT WORTH, TX

LEEVILLE (LEV) VORTAC REPLACEMENT

EXTERIOR ELEVATIONS

GRAND ISLE — LEEVILLE (LEV) VORTAC — LA

REVIEWED BY | SUBMITTED BY | APPROVED BY
SUBMITTER'S TITLE | APPROVER'S TITLE

DESIGNED BY J. HALEC
DRAWN BY J. HALEC
CHECKED BY W. STEVENS
ISSUED BY ENGINEERING SERVICES TERMINAL
DATE 9/12/2025 JCN: 1508914
DRAWING NO. LEV - D - VORTAC - A202
REV.

LEEVILLE VORTAC
GRAND ISLE
LOUISIANA

PLOT DATE/TIME: 9/11/2025 11:07:10 AM

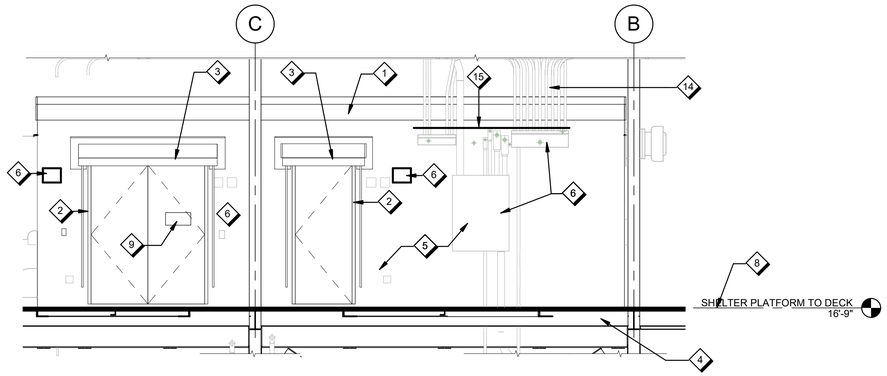

F8 / A203 ENLARGED EXTERIOR ELEVATION - NORTH

1/4" = 1'-0"

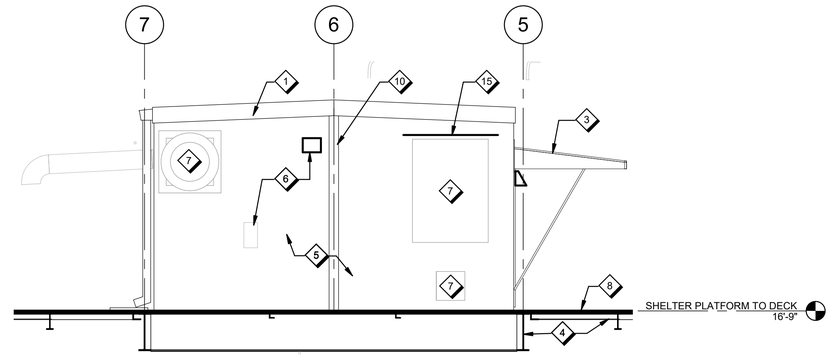

F5 / A203 ENLARGED EXTERIOR ELEVATION - EAST

1/4" = 1'-0"

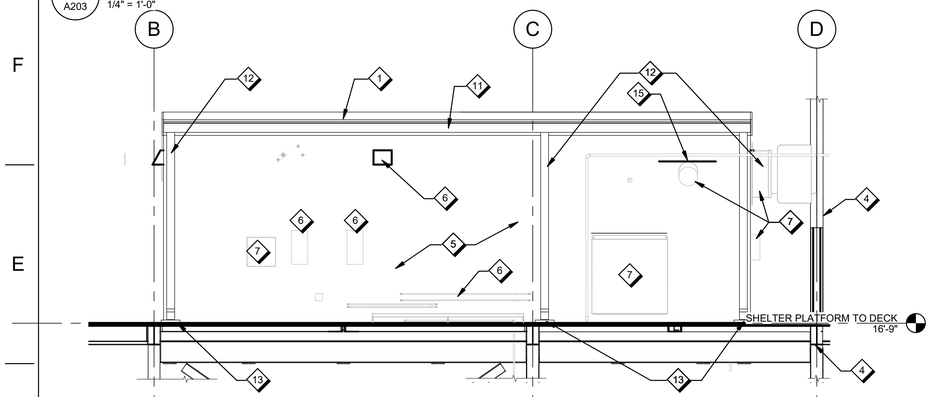

D8 / A203 ENLARGED EXTERIOR ELEVATION - SOUTH

1/4" = 1'-0"

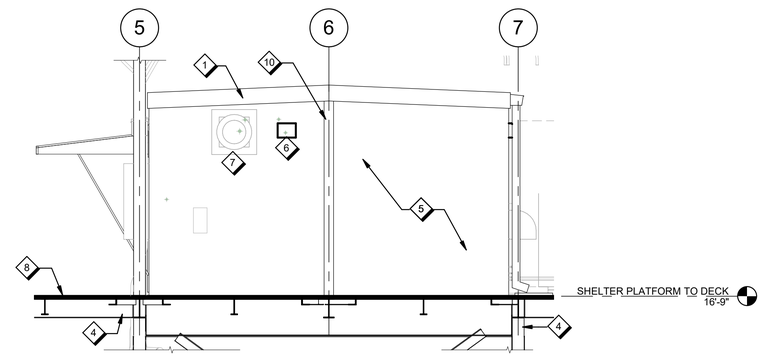

D5 / A203 ENLARGED EXTERIOR ELEVATION - WEST

1/4" = 1'-0"

GENERAL SHEET NOTES

A. EQUIPMENT INDICATED FOR COORDINATION, REFER TO ELECTRICAL AND MECHANICAL FOR EQUIPMENT LOCATIONS

B. COORDINATE AND PROVIDE WALL OPENINGS AND SUPPORTS AS REQUIRED FOR EQUIPMENT, REFER TO ELECTRICAL AND MECHANICAL FOR MORE INFORMATION

C. REFER TO A201 FOR EXTERIOR MATERIALS FINISH SCHEDULE.

D. REFER TO MECHANICAL AND ELECTRICAL FOR ADDITIONAL FINISH SELECTIONS, UON

SHEET NOTES

1 DRIP EDGE, DE-1
2 DOOR AND DOOR FRAME ASSEMBLY
3 STAINLESS STEEL AWNING, PMA-1
4 PLATFORM STRUCTURE, REFER TO STRUCTURAL, APPLY CTG-1 FINISH
5 PRECAST CONCRETE EQUIPMENT SHELTER, PC-1
6 ELECTRICAL EQUIPMENT, REFER TO ELECTRICAL
7 MECHANICAL EQUIPMENT, REFER TO MECHANICAL
8 METAL GRATING DECK
9 PERMANENT SIGN AFFIXED TO ACTIVE DOOR READING: "ENGINE GENERATOR/ELECTRICAL ROOM". FONT MUST BE 2" HIGH AND A CONTRASTING COLOR TO BACKGROUND.
10 BUILDING JOINT METAL FLASHING, MTL-1, SET IN SEALANT AND FASTEN TO STRUCTURE PER BUILDING MANUFACTURER'S REQUIREMENT
11 CONTINUOUS METAL GUTTER, 8" WIDE BY 6" DEEP
12 DOWNSPOUT
13 3" X 4" METAL DOWNSPOUT ATTACHED TO STRUCTURE, WITH PLASTIC SPLASHBLOCK ATTACHED TO GRATING
14 REFER TO ELECTRICAL FOR ROUTING OF ELECTRICAL EQUIPMENT
15 SSTL RAIN DRIP EDGE, REFER TO A8/A225

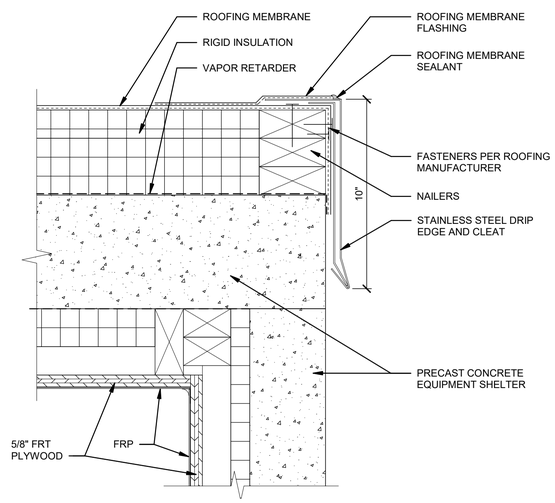

D2 / A203 ROOF EDGE DETAIL

3" = 1'-0"

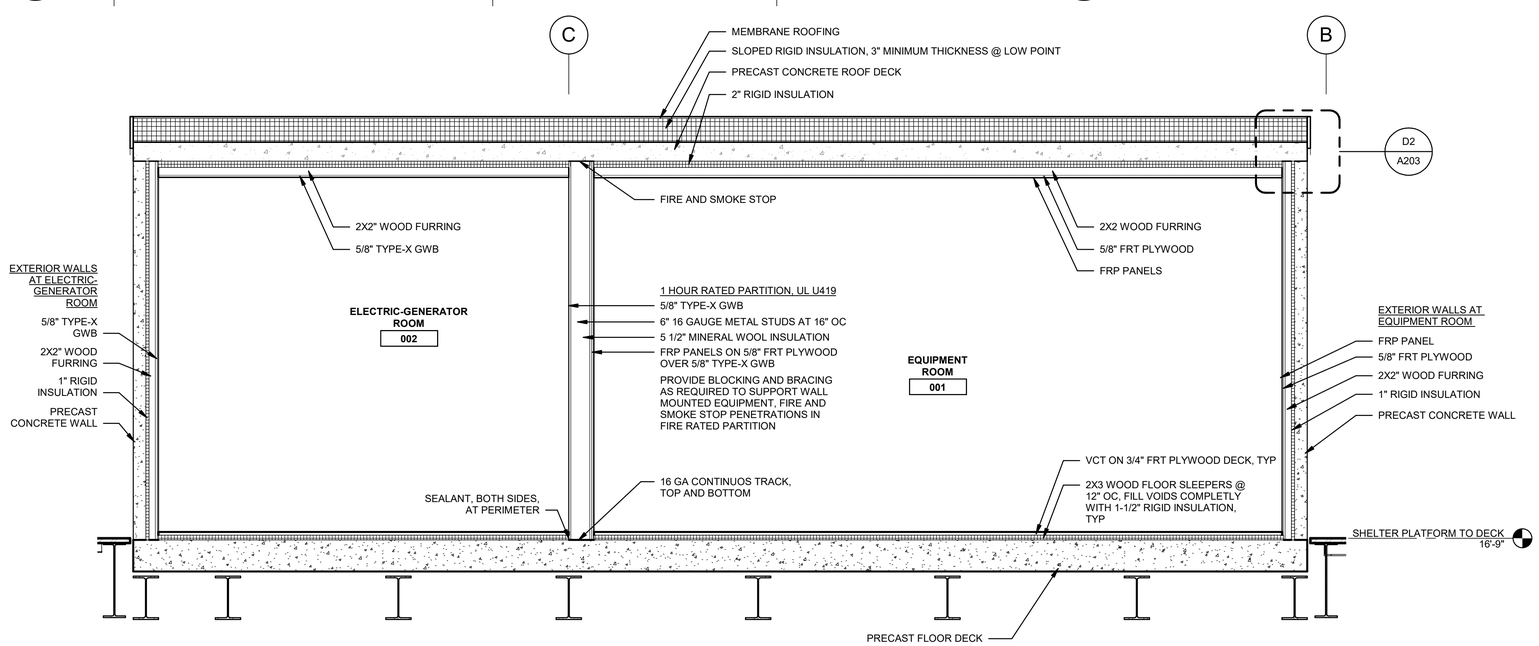

A8 / A203 EQUIPMENT SHELTER BUILDING SECTION

1/2" = 1'-0"

0 4" 8" 12"
Scale: 3 INCH = 1 FOOT

2 0 2 4
Scale: 1/2 INCH = 1 FOOT

4 0 4 8
Scale: 1/4 INCH = 1 FOOT

FOR OFFICIAL USE ONLY
PUBLIC AVAILABILITY TO BE DETERMINED UNDER 5 USC 552

COMMONWEALTH OF VIRGINIA
WILLIAM MICHAEL STEVENS
Lic. No. 3409
09/12/25
ARCHITECT

JACOBS
1100 N GLEBE RD.
SUITE 500
ARLINGTON, VA 22201

Jacobs

REV.	APPROVED DATE	DESCRIPTION	JCN	REDLINE DATE	APVD

DEPARTMENT OF TRANSPORTATION
FEDERAL AVIATION ADMINISTRATION
CENTRAL SERVICE REGION — FT WORTH, TX

LEEVILLE (LEV) VORTAC REPLACEMENT

ENLARGED EXTERIOR ELEVATIONS AND EQUIPMENT SHELTER BUILDING SECTION

GRAND ISLE — LEEVILLE (LEV) VORTAC — LA

REVIEWED BY | SUBMITTED BY | APPROVED BY
SUBMITTER'S TITLE | APPROVER'S TITLE

DESIGNED BY J. HALEC
DRAWN BY J. HALEC
CHECKED BY W. STEVENS
ISSUED BY ENGINEERING SERVICES TERMINAL
DATE 9/12/2025 JCN: 1508914
DRAWING NO. LEV - D - VORTAC - A203
REV.

LEEVILLE VORTAC
GRAND ISLE
LOUISIANA

PLOT DATE/TIME: 9/11/2025 11:07:12 AM

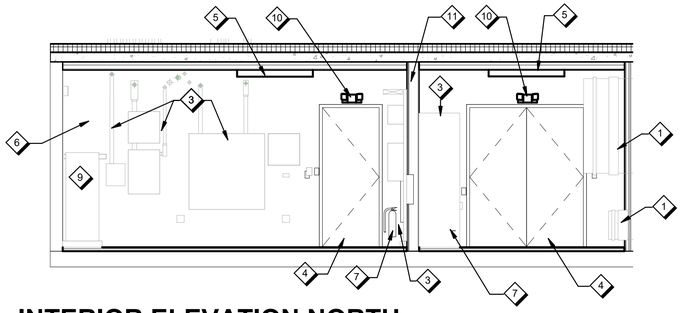

INTERIOR ELEVATION NORTH ELECTRIC-GENERATOR ROOM & EQUIPMENT ROOM

G8 / A225 — 1/4" = 1'-0"

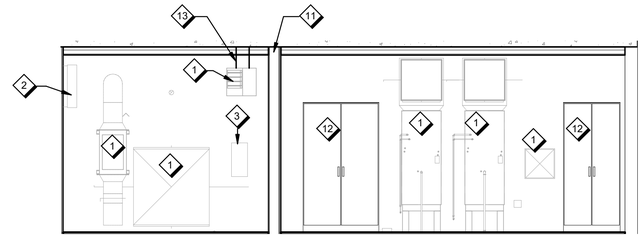

INTERIOR ELEVATION SOUTH ELECTRIC-GENERATOR ROOM & EQUIPMENT ROOM

G6 / A225 — 1/4" = 1'-0"

GENERAL SHEET NOTES

A. EQUIPMENT INDICATED FOR COORDINATION, REFER TO ELECTRICAL AND MECHANICAL FOR EQUIPMENT LOCATIONS

B. COORDINATE AND PROVIDE WALL OPENINGS AND SUPPORTS AS REQUIRED FOR EQUIPMENT, REFER TO ELECTRICAL AND MECHANICAL FOR MORE INFORMATION

C. REFER TO A201 FOR EXTERIOR MATERIALS FINISH SCHEDULE.

D. REFER TO MECHANICAL AND ELECTRICAL FOR ADDITIONAL FINISH SELECTIONS, UON

SHEET NOTES

1	MECHANICAL EQUIPMENT, REFER TO MECHANICAL
2	MECHANICAL OPENING, REFER TO MECHANICAL
3	ELECTRICAL EQUIPMENT, REFER TO ELECTRICAL
4	DOOR AND FRAME ASSEMBLY
5	LIGHT, REFER TO ELECTRICAL
6	FRP WALL PANELS
7	FIRE EXTINGUISHER, F-EXT
8	CABLE TRAY, REFER TO ELECTRICAL
9	BATTERY RACK, REFER TO ELECTRICAL
10	LIGHT FIXTURE, REFER TO ELECTRICAL
11	FIRE RATED PARTITION
12	STORAGE CABINET, COORDINATE WITH COR, STORAGE SHALL NOT IMPEDE ACCESS TO EQUIPMENT, FIELD VERIFY
13	CEILING SUPPORTED MECHANICAL EQUIPMENT, REFER TO STRUCTURAL FOR SUPPORT AND MECHANICAL
14	ENGINE GENERATOR, REFER TO ELECTRICAL AND MECHANICAL

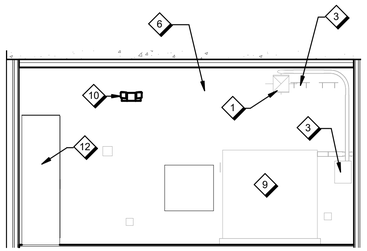

INTERIOR ELEVATION EQUIPMENT ROOM WEST WALL

D8 / A225 — 1/4" = 1'-0"

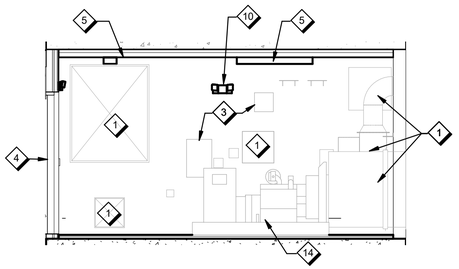

INTERIOR ELEVATION ELECTRIC-GENERATOR ROOM EAST WALL

D6 / A225 — 1/4" = 1'-0"

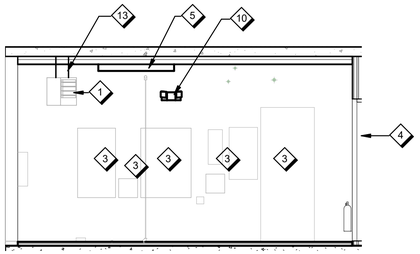

INTERIOR ELEVATION ELECTRIC- GENERATOR ROOM WEST WALL

D4 / A225 — 1/4" = 1'-0"

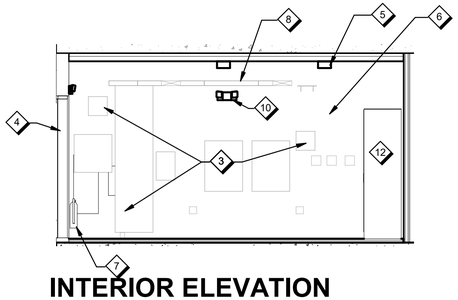

INTERIOR ELEVATION EQUIPMENT ROOM EAST WALL

D2 / A225 — 1/4" = 1'-0"

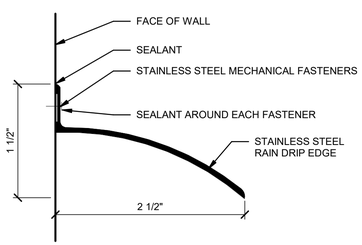

RAIN DRIP EDGE

A8 / A225 — 12" = 1'-0"

Scale: 1/4 INCH = 1 FOOT

FOR OFFICIAL USE ONLY
PUBLIC AVAILABILITY TO BE DETERMINED UNDER 5 USC 552

JACOBS
1100 N GLEBE RD.
SUITE 500
ARLINGTON, VA 22201

REV.	APPROVED DATE	DESCRIPTION	JCN	REDLINE DATE	APVD

COMMONWEALTH OF VIRGINIA
WILLIAM MITCHEL STEVENS
Lic. No. 3484
09/12/25
ARCHITECT

Jacobs

DEPARTMENT OF TRANSPORTATION
FEDERAL AVIATION ADMINISTRATION
CENTRAL SERVICE REGION — FT WORTH, TX

LEEVILLE (LEV) VORTAC REPLACEMENT

INTERIOR ELEVATIONS

GRAND ISLE — LEEVILLE (LEV) VORTAC — LA

LEEVILLE VORTAC
GRAND ISLE
LOUISIANA

REVIEWED BY	SUBMITTED BY		APPROVED BY
	SUBMITTER'S TITLE		APPROVER'S TITLE
	DESIGNED BY J. HALEC	ISSUED BY ENGINEERING SERVICES TERMINAL	DATE 9/12/2025 — JCN: 1508914
	DRAWN BY J. HALEC		DRAWING NO. LEV - D - VORTAC - A225 — REV.
	CHECKED BY W. STEVENS		

PLOT DATE/TIME: 9/11/2025 11:07:13 AM

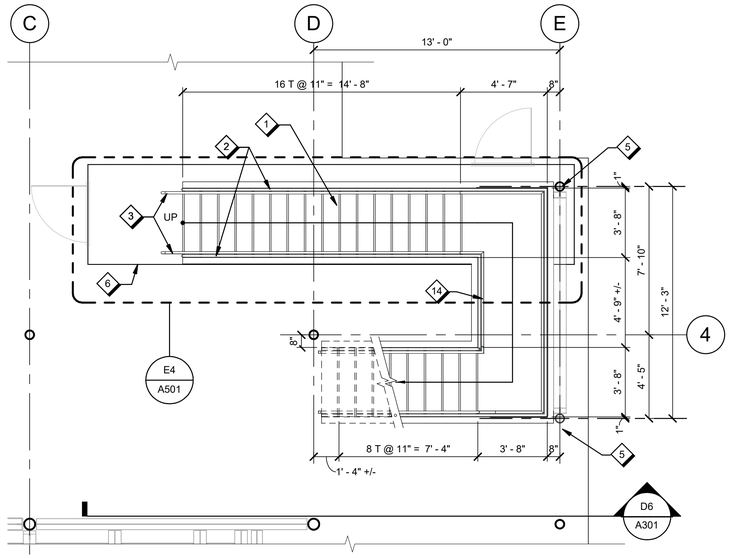

F8 A301 STAIR PLAN - GROUND LEVEL

1/4" = 1'-0"

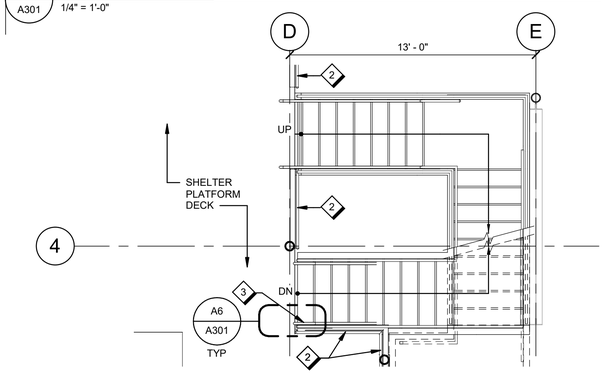

D8 A301 STAIR PLAN - SHELTER PLATFORM LEVEL

1/4" = 1'-0"

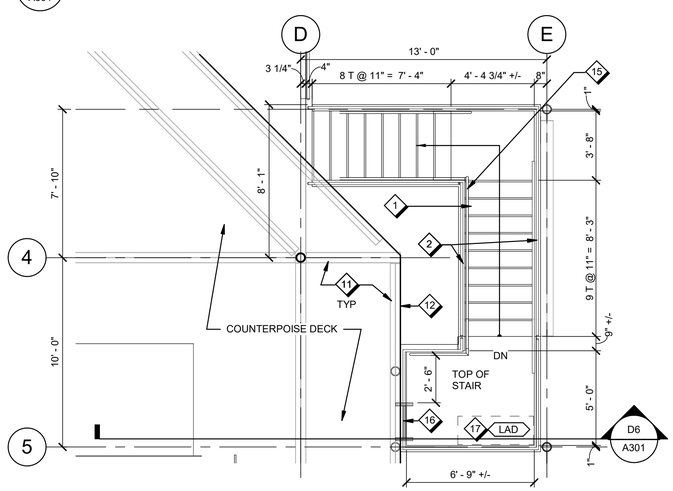

A8 A301 STAIR PLAN - COUNTERPOISE LEVEL

1/4" = 1'-0"

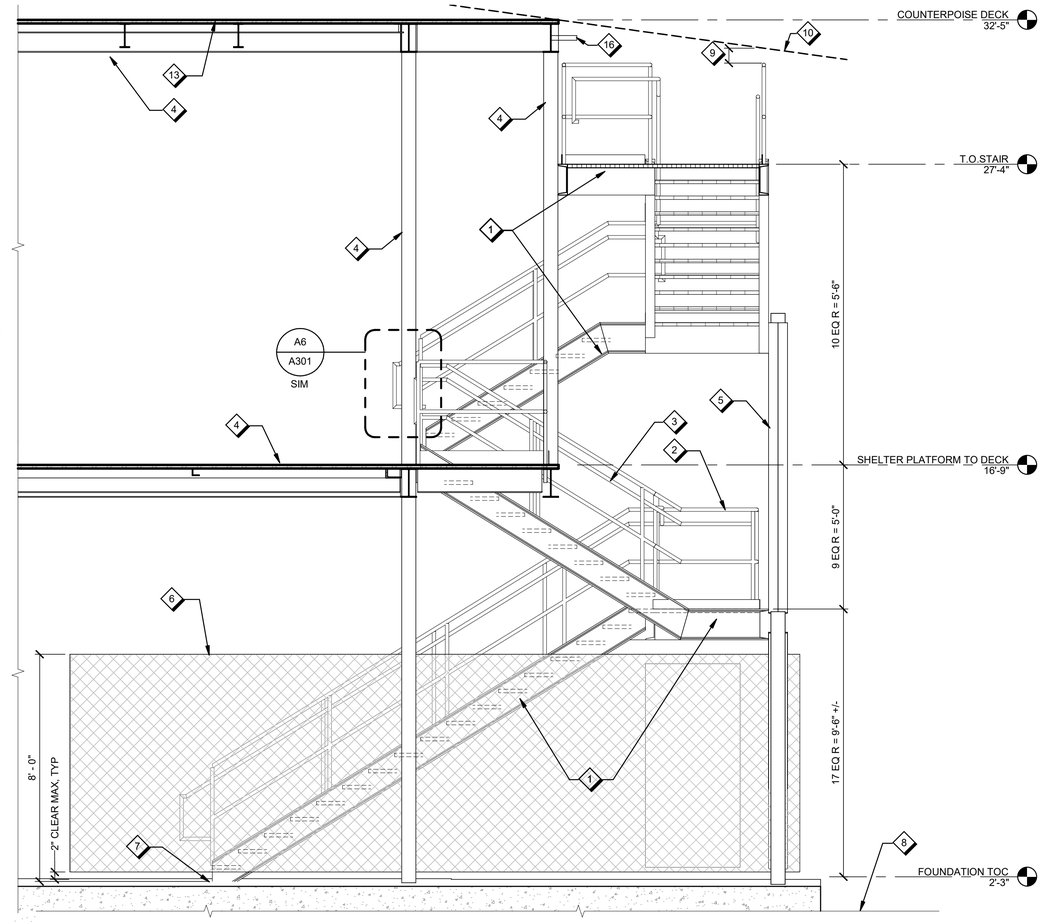

D6 A301 STAIR SECTION

3/8" = 1'-0"

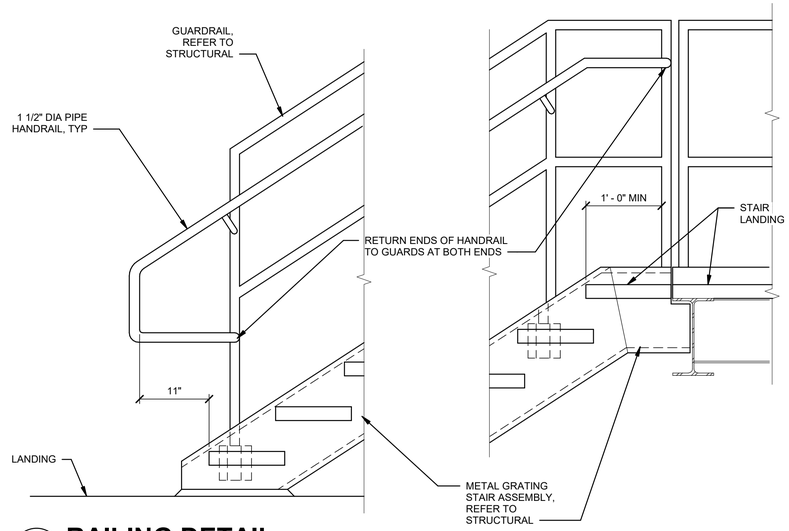

A6 A301 RAILING DETAIL

1" = 1'-0"

SHEET NOTES

1	METAL GRATING STAIR AND LANDING, REFER TO STRUCTURAL FOR ADDITONAL INFORMATION
2	METAL GUARDRAIL, REFER TO STRUCTURAL
3	METAL HANDRAIL, HANDRAIL SHALL RETURN TO GUARD RAIL POST. REFER TO STRUCTURAL
4	PLATFORM STRUCTURE, REFER TO STRUCTURAL, APPLY CTG-1 FINISH
5	STAIR STRUCTURE, REFER TO STRUCTURAL
6	WIRE MESH PARTITION ENCLOSURE (DELEGATED DESIGN)
7	TOP OF CONCRETE, REFER TO STRUCTURAL FOR ADDITIONAL INFORMATION
8	GRADE, REFER TO CIVIL
9	TOP OF STAIR ASSEMBLY MUST NOT EXTEND BEYOND COUNTERPOISE FIELD OF INFLUENCE.
10	DASHED LINE INDICATES COUNTERPOISE FIELD OF INFLUENCE. COORDINATE WITH ELECTRICAL AND COR.
11	STRUCTURE BELOW
12	EDGE OF COUNTERPOISE DECK
13	COUNTERPOISE DECK, REFER TO STRUCTURAL
14	
15	CONTINUOUS INBOARD METAL HANDRAIL AT 3'-0" ABOVE STAIR PLATFORM
16	LADDER SUPPORT BRACKET, REFER TO STRUCTURAL
17	LADDER, COORDINATE FINAL STORAGE LOCATION WITH COR

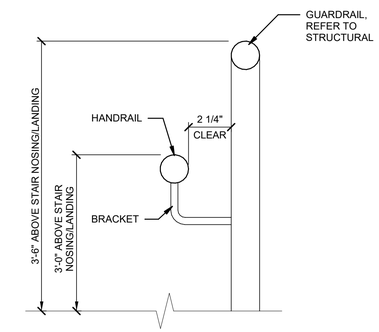

D2 A301 PARTIAL RAILING SECTION

3" = 1'-0"

Scale: 1 INCH = 1 FOOT

Scale: 3/8 INCH = 1 FOOT

Scale: 1/4 INCH = 1 FOOT

FOR OFFICIAL USE ONLY

PUBLIC AVAILABILITY TO BE DETERMINED UNDER 5 USC 552

COMMONWEALTH OF VIRGINIA
WILLIAM HENRY STEVENS
Lic. No. 0401
09/12/25
ARCHITECT

JACOBS
1100 N GLEBE RD.
SUITE 500
ARLINGTON, VA 22201

REV.	APPROVED DATE	DESCRIPTION	JCN	REDLINE DATE	APVD

DEPARTMENT OF TRANSPORTATION
FEDERAL AVIATION ADMINISTRATION
CENTRAL SERVICE REGION — FT WORTH, TX

Jacobs

LEEVILLE (LEV) VORTAC REPLACEMENT

ARCHITECTURAL STAIR PLANS, SECTION, AND DETAILS

GRAND ISLE — LEEVILLE (LEV) VORTAC — LA

LEEVILLE VORTAC
GRAND ISLE
LOUISIANA

REVIEWED BY	
SUBMITTED BY	
SUBMITTER'S TITLE	
APPROVED BY	
APPROVER'S TITLE	
DESIGNED BY	J. HALEC
DRAWN BY	J. HALEC
CHECKED BY	W. STEVENS
ISSUED BY	ENGINEERING SERVICES TERMINAL
DATE	9/12/2025
JCN:	1508914
DRAWING NO.	LEV - D - VORTAC - A301
REV.	

PLOT DATE/TIME: 9/11/2025 11:07:14 AM

DOOR SCHEDULE

DOOR NUMBER	DOOR TYPE	DOOR WIDTH	DOOR HEIGHT	DOOR THICKNESS	DOOR MATERIAL	FIRE RATING IN MINUTES	FRAME MATERIAL	FRAME TYPE	FRAME HEAD	FRAME JAMB	FRAME SILL	HARDWARE	NOTES
1	F	3'-0"	7'-4"	1 3/4"	SSTL	-	SSTL	F1	D8/A403 - J1 SIM	D8/A403 - J1	D8/A403 - S1	HDW-1	INSULATED DOOR
2	FF	6'-0"	7'-4"	1 3/4"	SSTL	-	SSTL	F1	D8/A403 - J1 SIM	D8/A403 - J2	D8/A403 - S1	HDW-2	INSULATED DOOR
3	G	3'-0"	7'-0"	SEE NOTES	SSTL	-	SSTL	G	SEE NOTES	SEE NOTES	SEE NOTES		REFER TO SPECIFICATIONS
4	G	3'-0"	7'-0"	SEE NOTES	SSTL	-	SSTL	G	SEE NOTES	SEE NOTES	SEE NOTES		REFER TO SPECIFICATIONS

DOOR AND FRAME TYPES

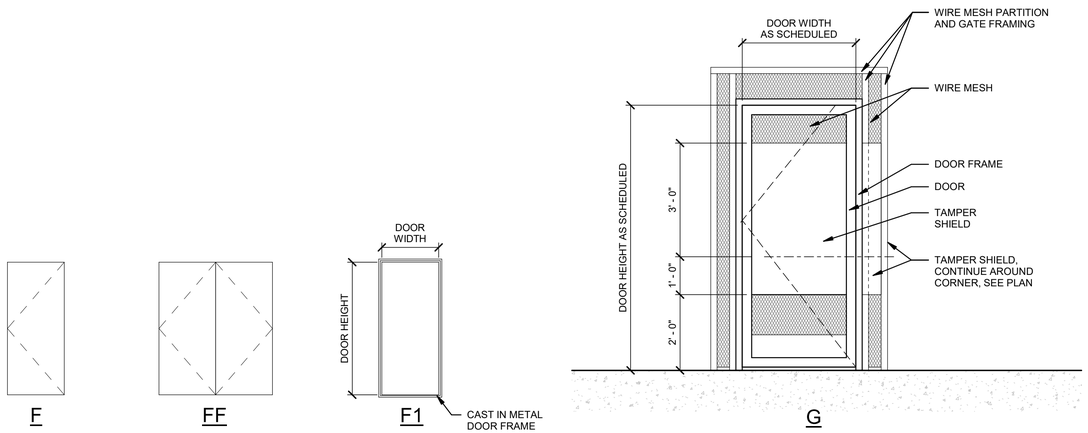

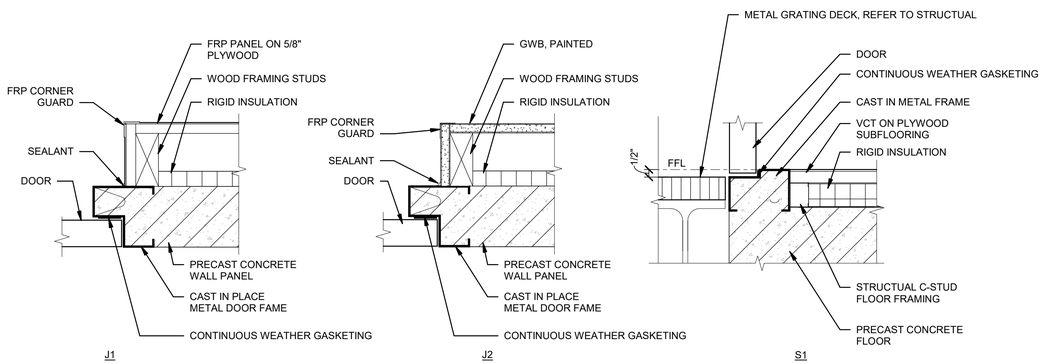

C8 / A501 DOOR DETAILS

NTS

SHEET NOTES

1. WIRE MESH PARTITION ENCLOSURE (DELEGATED DESIGN)
2. MAINTAIN 4" CLEAR FROM EDGE OF STRUCTURE TO WIRE MESH PARTITION FRAMING
3. CONTINUOUS TAMPER SHIELD

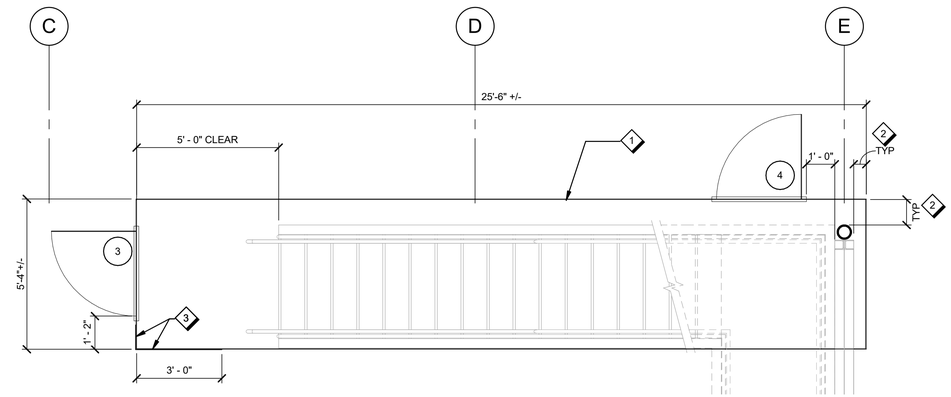

E4 / A501 WIRE MESH ENCLOSURE PLAN

3/8" = 1'-0"

FOR OFFICIAL USE ONLY
PUBLIC AVAILABILITY TO BE DETERMINED UNDER 5 USC 552

JACOBS
1100 N GLEBE RD.
SUITE 500
ARLINGTON, VA 22201

REV.	APPROVED DATE	DESCRIPTION	JCN	REDLINE DATE	APVD

DEPARTMENT OF TRANSPORTATION
FEDERAL AVIATION ADMINISTRATION
CENTRAL SERVICE REGION — FT WORTH, TX

LEEVILLE (LEV) VORTAC REPLACEMENT

DOOR SCHEDULE AND DETAILS

GRAND ISLE — LEEVILLE (LEV) VORTAC — LA

COMMONWEALTH OF VIRGINIA
WILLIAM MITCHELL STEVENS
Lic. No. 3484
09/12/25
ARCHITECT

Jacobs

LEEVILLE VORTAC
GRAND ISLE
LOUISIANA

REVIEWED BY | SUBMITTED BY | APPROVED BY
SUBMITTER'S TITLE | APPROVER'S TITLE
DESIGNED BY (Designer) | DRAWN BY (Author) | CHECKED BY (Checker)
ISSUED BY: ENGINEERING SERVICES TERMINAL
DATE: 9/12/2025 | JCN: 1508914
DRAWING NO.: LEV - D - VORTAC - A501 | REV.

PLOT DATE/TIME: 9/11/2025 11:07:15 AM

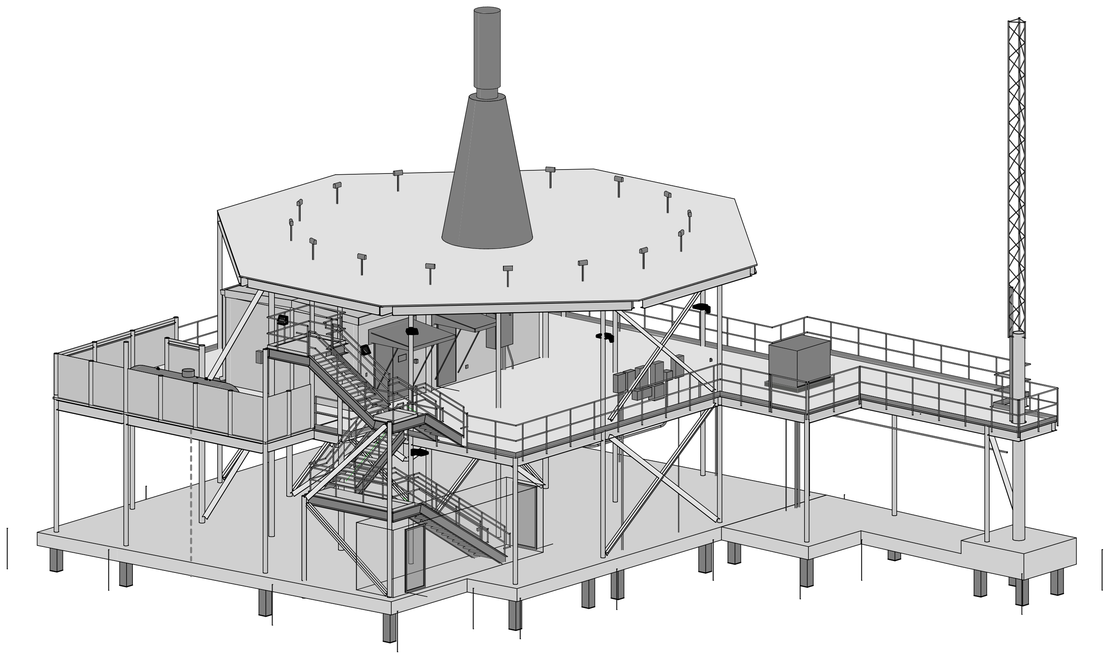

C8 A901 PERSPECTIVE VIEW FROM NORTHEAST
REFERENCE ONLY - NOT FOR CONSTRUCTION

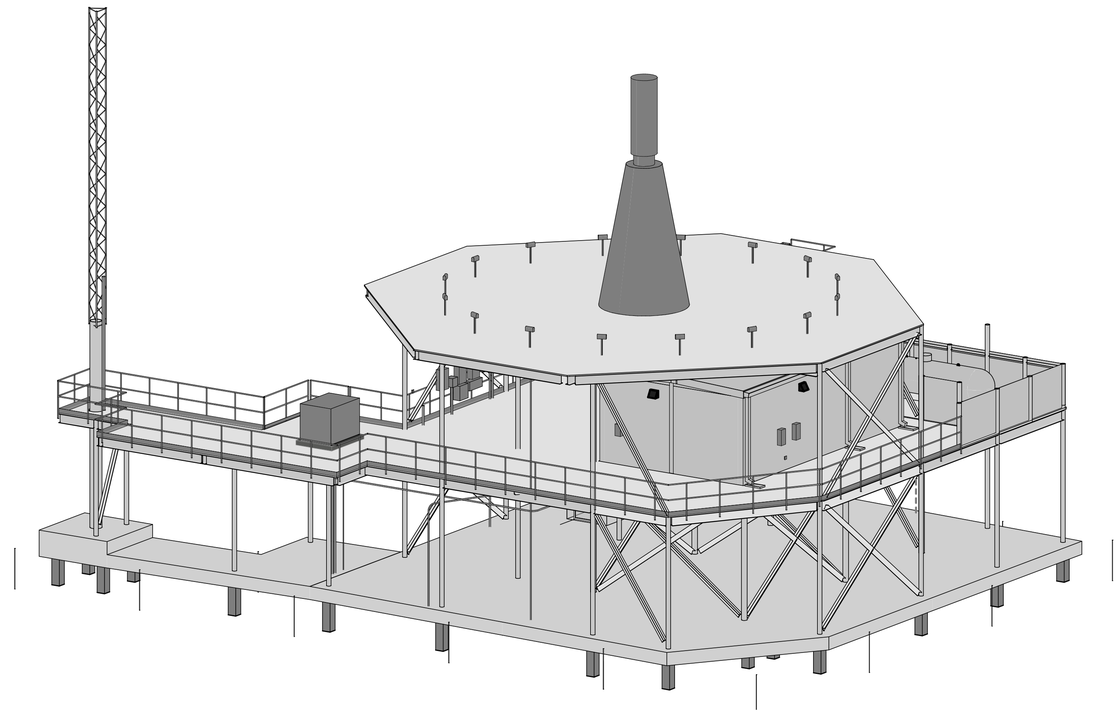

C3 A901 PERSPECTIVE VIEW FROM SOUTHWEST
REFERENCE ONLY - NOT FOR CONSTRUCTION

FOR OFFICIAL USE ONLY
PUBLIC AVAILABILITY TO BE DETERMINED UNDER 5 USC 552

JACOBS
1100 N GLEBE RD.
SUITE 500
ARLINGTON, VA 22201

REV.	APPROVED DATE	DESCRIPTION	JCN	REDLINE DATE	APV'D

DEPARTMENT OF TRANSPORTATION
FEDERAL AVIATION ADMINISTRATION
CENTRAL SERVICE REGION — FT WORTH, TX

LEEVILLE (LEV) VORTAC REPLACEMENT

PERSPECTIVE VIEWS

GRAND ISLE — LEEVILLE (LEV) VORTAC — LA

COMMONWEALTH OF VIRGINIA
WILLIAM KEITH SIERS
Lic. No. 3484
09/12/25
ARCHITECT

Jacobs

LEEVILLE VORTAC
GRAND ISLE
LOUISIANA

REVIEWED BY | SUBMITTED BY | APPROVED BY
SUBMITTER'S TITLE | APPROVER'S TITLE

DESIGNED BY J. HALEC
DRAWN BY J. HALEC
CHECKED BY W. STEVENS

ISSUED BY: ENGINEERING SERVICES TERMINAL

DATE 9/12/2025 | JCN: 1508914
DRAWING NO. LEV - D - VORTAC - A901 | REV.

PLOT DATE/TIME: 9/11/2025 11:07:23 AM

DESIGN CRITERIA

THE STRUCTURAL DESIGN CONFORMS TO THE FOLLOWING CODES/STANDARDS:

1. FAA AIR TRAFFIC ORGANIZATION TERMINAL FACILITIES DESIGN STANDARD VERSION 2.0, AUGUST 1, 2022.
2. IBC 2024 INTERNATIONAL BUILDING CODE, INTERNATIONAL CODE COUNCIL.
3. ASCE/SEI 7–22 MINIMUM DESIGN LOADS FOR BUILDINGS AND OTHER STRUCTURES.
4. ASCE 24-14 FLOOD RESISTANT DESIGN AND CONSTRUCTION.
5. AISC 360-22 SPECIFICATION FOR STRUCTURAL STEEL BUILDINGS, AMERICAN INSTITUTE OF STEEL CONSTRUCTION, 2022.
6. ACI 318-22 BUILDING CODE REQUIREMENTS FOR STRUCTURAL CONCRETE AND COMMENTARY, AMERICAN CONCRETE INSTITUTE, SIXTH PRINTING.
7. AWS D1.1-20 STRUCTURAL WELDING CODE.
8. AISC 341-22 SEISMIC PROVISIONS FOR STRUCTURAL STEEL BUILDINGS, AMERICAN INSTITUTE OF STEEL CONSTRUCTION, 2022.

GENERAL REQUIREMENTS

1. ELEVATIONS NOTED ON THE STRUCTURAL DRAWINGS ARE RELATIVE TO MEAN SEA LEVEL.
2. DETAILS LABELED "TYPICAL DETAILS" OR DETAILS ON "TYPICAL DETAILS" SHEETS APPLY TO SITUATIONS THAT ARE THE SAME OR SIMILAR TO THOSE SPECIFICALLY DETAILED. SUCH DETAILS AND DIMENSIONS APPLY WHETHER OR NOT DETAILS ARE REFERENCED AT EACH LOCATION.
3. ISOMETRIC REPRESENTATIONS OF THE STRUCTURE ARE FOR INFORMATION ONLY AND ARE NOT TO BE USED FOR CONSTRUCTION OR SHOP DRAWING PRODUCTION.
4. MAKE NO CHANGE IN SIZE, DIMENSION OR POSITION OF STRUCTURAL ELEMENTS WITHOUT THE WRITTEN APPROVAL OF THE CONTRACTING OFFICER'S REPRESENTATIVE.
5. REVIEW AND VERIFY AS-BUILT CONDITIONS AND ACTUAL EQUIPMENT DIMENSIONS USING APPROVED MANUFACTURER/ VENDOR DRAWINGS PRIOR TO SUBMISSION OF SHOP DRAWINGS AND/OR STARTING CONSTRUCTION.
6. REVIEW AND VERIFY LOCATION OF INSERTS, OPENINGS, SLEEVES, AND FINISHES. COORDINATE WITH OTHER DISCIPLINE SHEETS.
7. DO NOT SCALE DRAWINGS FOR THE PURPOSE OF ESTABLISHING DIMENSIONS.
8. DO NOT STORE OR STACK CONSTRUCTION MATERIALS ON FLOORS IN EXCESS OF 80 PERCENT OF LIVE LOAD.
9. PROVIDE BRACING AND SHORING TO MAINTAIN THE STABILITY OF, AND TO AVOID OVER-LOADING THE STRUCTURE DURING CONSTRUCTION. THE STRUCTURE IS DESIGNED FOR THE COMPLETED CONDITION ONLY. PROVIDE TEMPORARY SUPPORT TO MAINTAIN STABILITY/AVOID OVER-LOADING BEFORE COMPLETION.
10. CUT NO HOLES IN STRUCTURAL MEMBERS WITHOUT APPROVAL FROM THE COR.
11. DO NOT REPRODUCE STRUCTURAL CONTRACT DRAWINGS FOR RESUBMITTAL AS SHOP DRAWINGS. SHOP DRAWINGS PRODUCED IN SUCH A MANNER WILL BE REJECTED AND RETURNED WITHOUT REVIEW.
12. PROTECT UTILITIES, STRUCTURAL MEMBERS, FINISHES, SITE IMPROVEMENTS, ETC. DURING CONSTRUCTION. ASSUME FULL RESPONSIBILITY FOR DAMAGE DURING CONSTRUCTION.
13. DO NOT CHANGE THE SIZE, DIMENSION, OR POSITION OF THE STRUCTURAL ELEMENTS WITHOUT THE WRITTEN APPROVAL OF THE CONTRACTING OFFICER'S REPRESENTATIVE.
14. STORE, HANDLE, PREPARE AND INSTALL MATERIALS IN ACCORDANCE WITH MANUFACTURER'S/VENDOR'S PRINTED RECOMMENDATIONS UON ON THE DRAWINGS OR SPECIFICATIONS.

DESIGN LOADS

1. FLOOR AND ROOF LIVE LOAD — SEE LOADS PLANS ON S-003
2. SNOW
   - A. GROUND SNOW LOAD: 0 PSF
   - B. EXPOSURE FACTOR: C
   - C. THERMAL FACTOR: 1.2
   - D. SNOW LOAD IMPORTANCE FACTOR: 1.0
   - E. FLAT-ROOF SNOW LOAD: 0 PSF
   - F. MINIMUM UNIFORM SNOW LOAD: 0 PSF
3. WIND
   - A. ULTIMATE DESIGN WIND SPEED: 179 MPH
   - B. RISK CATEGORY: IV
   - C. ENCLOSURE CLASSIFICATION: OPEN STRUCTURE, OBSTRUCTED WIND FLOW
   - D. WIND EXPOSURE: D
   - E. INTERNAL PRESSURE COEFFICIENT: +/-0.0
4. EARTHQUAKE
   - A. RISK CATEGORY: IV
   - B. SEISMIC IMPORTANCE FACTOR: 1.5
   - C. MAPPED SPECTRAL ACCELERATION
     - a. SHORT PERIOD, S_S: 0.10
     - b. 1-SECOND PERIOD, S_1: 0.053g
   - D. SITE CLASS: D
   - E. DESIGN SPECTRAL ACCELERATION
     - a. SHORT PERIOD, S_{DS}: 0.090g
     - b. 1-SECOND PERIOD, S_{D1}: 0.076g
   - F. SEISMIC DESIGN CATEGORY: C
   - G. SEISMIC FORCE-RESISTING SYSTEM: STEEL ORDINARY CONCENTRICALLY BRACED FRAMES
   - H. DESIGN BASE SHEAR: 10.5 KIPS
   - I. SEISMIC RESPONSE COEFFICIENT, C_S: 0.042
   - J. RESPONSE MODIFICATION COEFFICIENT, R: 1.5
   - K. OVERSTRENGTH FACTOR, Ω_O: 1.0
   - L. DEFLECTION AMPLIFICATION FACTOR, C_D: 1.5
   - M. ANALYSIS PROCEDURE USED: EQUIVALENT LATERAL FORCE PROCEDURE. REFER TO TABLE 15.4-1, SEISMIC COEFFICIENTS FOR NONSTRUCTURAL STRUCTURES SIMILAR TO BUILDINGS.
5. FLOOD
   - A. FLOOD DESIGN CLASS: IV
   - B. BASE FLOOD ELEVATION 11 FT MSL

GEOTECHNICAL

1. FOUNDATION DESIGN IS BASED ON THE GEOTECHNICAL REPORT BY FUGRO, ENTITLED "LEEVILLE VOR FACILITY REPLACEMENT PROJECT", DATED JANUARY 19, 2024.
2. EARTHWORK, FOUNDATION SUBGRADE, FILL AND BACKFILL MUST BE INSPECTED AND APPROVED BY THE CONTRACTOR'S INSPECTOR AS INDICATED UNDER SPECIAL INSPECTIONS REQUIREMENTS. IMMEDIATELY NOTIFY THE COR IN WRITING IF CONDITIONS DEVIATING FROM THOSE DESCRIBED IN THE DRAWINGS ARE ENCOUNTERED BEFORE PROCEEDING WITH THE WORK.
3. CONTRACTOR MUST LOCATE EXISTING TIMBER PILES PRIOR TO INSTALLING NEW PILES AND WILL NOTIFY COR OF ANY INTERFERENCES. DESIGN INTENT: NEW PILES MUST BE SPACED AT LEAST 5 PILE DIAMETERS CENTER-TO-CENTER FROM EXISTING PILES. ADJUSTMENT OF NEW PILES MAY BE NECESSARY.
4. PILES EXPOSED DURING SUBGRADE PREPARATION MUST BE CUT AT LEAST 2'-0" BELOW THE BOTTOM OF THE MAT FOUNDATION.
5. DESIGN, CERTIFY, SUPPLY, AND INSTALL PILES IN ACCORDANCE WITH THE SPECIFICATIONS.
6. PILES MUST BE 12" SQUARE PRECAST PRESTRESSED CONCRETE PILES.
7. MINIMUM PILE CONCRETE COMPRESSIVE STRENGTH IS 5000 PSI.
8. MINIMUM LRFD PILE LOADS:
   - A. 135.0 KIPS COMPRESSION
   - B. 120.0 KIPS TENSION
   - C. 7.4 KIPS LATERAL
9. MINIMUM ASD PILE LOADS:
   - A. 55.0 KIPS COMPRESSION
   - B. 5.5 KIPS TENSION
   - C. 6.1 KIPS LATERAL, MAXIMUM DEFLECTION = 1"
10. PILE CAPACITY FACTOR OF SAFETY IS 2.5.
11. PILE TIP ELEVATION IS -49'-9" MSL.

CONCRETE

1. REINFORCING BARS: ASTM A615, GRADE 60, DEFORMED.
2. REINFORCING BARS SHALL BE HOT-DIP GALVANIZED PER ASTM A123. REPAIR DAMAGED GALVANIZING PER ASTM A780.
3. PROVIDE NORMAL WEIGHT CONCRETE WITH MINIMUM 28-DAY COMPRESSIVE STRENGTHS OF 5,000 PSI.
4. PROVIDE 3" MINIMUM CONCRETE COVER FOR REINFORCEMENT.
5. DETAILING OF CONCRETE REINFORCEMENT BARS AND ACCESSORIES MUST CONFORM TO RECOMMENDATIONS OF LATEST EDITIONS OF ACI'S "DETAILS AND DETAILING OF CONCRETE REINFORCEMENT" (ACI 315) AND DETAILING MANUAL." PLACING OF REINFORCING BARS MUST CONFORM TO RECOMMENDATIONS OF CRSI'S "MANUAL OF STANDARD PRACTICE."
6. MIXING, TRANSPORTING, AND PLACING OF CONCRETE MUST CONFORM TO ACI 301.
7. FIELD BENDING OF REINFORCEMENT IS NOT PERMITTED, UON OR APPROVED IN WRITING BY THE COR. REBAR MUST NOT BE HEATED WITH A TORCH IN THE FIELD.
8. DO NOT WELD REINFORCING.
9. CONSTRUCTION JOINTS MUST BE WIRE BRUSHED, CLEANED, AND COATED WITH A BONDING AGENT OR MOISTENED WITH A CEMENT SLURRY SCRUBBED INTO THE JOINT IMMEDIATELY PRIOR TO PLACING CONCRETE.
10. SUBMIT CONSTRUCTION JOINT LOCATIONS TO COR FOR APPROVAL PRIOR TO SUBMITTING REINFORCEMENT SHOP DRAWINGS.
11. HORIZONTAL JOINTS WILL NOT BE PERMITTED IN CONCRETE CONSTRUCTION. VERTICAL JOINTS MUST OCCUR AT LOCATIONS APPROVED BY THE COR.
12. PROTECT AND CURE CONCRETE SURFACES. BEGIN CURING FLATWORK IMMEDIATELY AFTER FINISHING.
13. INSTALL AND SECURE EMBEDMENTS SUCH AS ANCHOR BOLTS AND EMBEDMENT PLATES WITHIN SPECIFIED TOLERANCES BEFORE CONCRETE PLACEMENT.

MASS CONCRETE

1. MASS CONCRETE IS DEFINED AS MEMBERS WHOSE LEAST DIMENSION IS 3'-0" OR GREATER.
2. MIX DESIGN MUST ACCOUNT FOR THE EFFECTS OF MASS CONCRETE.
3. CONTROL THE HEAT OF HYDRATION PER SECTION 8 OF ACI 301.
4. SUBMIT A THERMAL CONTROL PLAN FOR EACH MASS CONCRETE PLACEMENT.

PRECAST CONCRETE EQUIPMENT SHELTER

1. THE PRECAST CONCRETE SHELTER IS A DELEGATED DESIGN. THE SHELTER MUST BE DESIGNED FOR THE FOLLOWING ASSUMED LOADS:
   - A. WEIGHT: 170 KIPS (NOT INCLUDING WEIGHT OF EQUIPMENT SHOWN ON STRUCTURAL LOAD PLANS)
   - B. INTERNAL STATIC LOAD PRESSURE (MINIMUM): 100 PSF AT FLOORS, WALLS, AND ROOF (GENERATOR ROOM ONLY)
   - C. WIND PRESSURE: PER DELEGATED DESIGN ENGINEER BASED ON PROVIDED DESIGN CRITERIA.
2. DELEGATED DESIGN ENGINEER MUST NOTIFY THE CONTRACTING OFFICER'S REPRESENTATIVE IF PROPOSED LOADS ARE GREATER THAN THE ASSUMED.

TACAN MONITOR TOWER

1. THE BASIS OF DESIGN FOR THE 65-FOOT TALL CENTER-HINGED LIR TOWER IS A FRANGIBLE AIRPORT SAFETY MAST MANUFACTURED BY EXEL COMPOSITES, INC.
   - A. WWW.EXELCOMPOSITES.COM
   - B. EMAIL: SIMON.FOSTER@PATRIOTTAXIWAY.COM
   - C. PHONE: +44 7894 963101
2. THE MONITOR POLE IS A DELEGATED DESIGN. THE FOUNDATION IS DESIGNED BASED ON THE ASSUMED POLE FACTORED REACTIONS:
   - A. VERTICAL REACTION: 30 KIPS
   - B. HORIZONTAL REACTION: 58 KIPS
   - C. OVERTURNING MOMENT: 540 FT-KIPS
3. ALL HARDWARE AND OPERATING COMPONENTS MUST BE TYPE 316 STAINLESS STEEL.
4. DELEGATED DESIGN ENGINEER MUST NOTIFY THE CONTRACTING OFFICER'S REPRESENTATIVE IF PROPOSED REACTION IS GREATER THAN ASSUMED REACTION.
5. OPERATION OF THE TILT-DOWN TOWER MUST BE MANUAL.
6. ALTERNATE POLES THAT DO NOT INTERFERE WITH THE OPERATIONS OF THE FACILITY MAY BE ACCEPTABLE PENDING APPROVAL BY COR.

STRUCTURAL STEEL

1. STRUCTURAL STEEL DESIGN CONFORMS TO AISC 360–22 SPECIFICATION FOR STRUCTURAL STEEL BUILDINGS.
2. STRUCTURAL STEEL MATERIALS:
   - A. W-SHAPES: ASTM A992, GRADE 50
   - B. ANGLES, CHANNELS: ASTM A36
   - C. PLATES: ASTM A36
   - D. STEEL TUBES: ASTM A500, GRADE C
   - E. COLUMN BASE PLATES: ASTM A572, GRADE 50
3. WELDING MUST COMPLY WITH AWS REQUIREMENTS AND MEET AISC MINIMUM REQUIREMENTS FOR WELD SIZE. PROVIDE FILLER METAL WITH A MINIMUM TENSILE STRENGTH OF 70 KSI.
4. BOLTS, CONNECTORS AND ANCHORS:
   - A. BOLTS: ASTM F3125, GRADE A325
   - B. NUTS: ASTM A563, GRADE C, HEAVY-HEX CARBON STEEL NUTS
   - C. WASHERS: ASTM F436, TYPE 1, HARDENED CARBON-STEEL WASHERS
   - D. HEADED ANCHOR RODS: ASTM F1554, GRADE 36
   - E. THREADED RODS: ASTM A36
5. GROUT UNDER COLUMN BASE PLATES WITH HIGH-STRENGTH, NON-METALLIC, SHRINKAGE-RESISTANT GROUT WHICH CONFORMS TO ASTM C1107.
6. STEEL, INCLUDING BUT NOT LIMITED TO BEAMS, COLUMNS, BRACING, STAIRS, RAILINGS, GRATING, AND CONNECTIONS, MUST BE SHOP PRIMED WITH A ZINC-RICH PRIMER AND COATED WITH A FIELD-APPLIED HIGH PERFORMANCE COATING.
7. REPAIR DAMAGED PRIMER AND HIGH PERFORMANCE COATINGS.
8. PROVIDE STEEL TO STEEL CONNECTIONS FOR THE FACTORED VERTICAL SHEAR REACTIONS INDICATED IN THE TABLE BELOW FOR FRAMING MEMBERS. WHEN THE REACTION IS NOT SHOWN, CONNECTIONS MUST BE DESIGNED FOR A FACTORED LOAD OF 20 KIP WITH A MINUM 2 ROWS OF BOLTS.

STEEL FRAMING FACTORED SHEAR REACTION

BEAM SIZE	REACTION
W12X26	20 KIP
W14X43	30 KIP
W18X65	20 KIP
W24X55	60 KIP

POST-INSTALLED ANCHORS

1. MATERIALS:
   - A. CARBON STEEL WEDGE ANCHOR STUDS: ASTM A 510 OR ASTM A 108.
   - B. NUT & WASHER: COMPATIBLE WITH STUD MATERIAL & FINISH.
   - C. CARBON STEEL THREADED ROD: ISO 898 CLASS 5.8.
   - D. CONCRETE REINFORCING DOWELS: ASTM A 615, GRADE 60
   - E. MESH SCREEN TUBE: CYLINDRICAL SHAPE WITH ONE END CLOSED MANUFACTURED FROM ZINC PLATED LOW CARBON STEEL OR STAINLESS STEEL. MESH SIZE, DIAMETER, AND LENGTH AS SPECIFIED BY ADHESIVE MANUFACTURER.
2. MECHANICAL ANCHORS AND THREADED INSERTS MUST BE CARBON STEEL WITH ZINC PLATING IN ACCORDANCE WITH ASTM B 633,TYPE III Fe/Zn 5 (SC1), UNLESS NOTED OTHERWISE.
   - A. POST-INSTALLED ANCHORS MANUFACTURED BY HILTI, INC. ARE SPECIFIED AS A BASIS OF DESIGN AND TO ESTABLISH THE DESIRED QUALITY AND PERFORMANCE OF THE WORK. ALTERNATES MAY BE APPROVED BY THE COR.
3. ANCHORING TO CONCRETE: TYPE AND SIZE AS INDICATED.
   - A. MECHANICAL ANCHORS:
     - a. MECHANICAL ANCHORS USED IN CONCRETE MUST HAVE BEEN TESTED AND PREQUALIFIED FOR PERFORMANCE IN CRACKED AND UNCRACKED CONCRETE IN ACCORDANCE WITH ACI 355.2 AND ICC-ES AC193, INCLUDING SEISMIC SHEAR AND TENSION.
     - b. EXPANSION ANCHORS: WEDGE TYPE, TORQUE CONTROLLED ANCHORS.
   - B. ADHESIVE ANCHORS:
     - a. ANCHORS CONSISTING OF AN INSERT AND CARTRIDGE TYPE, TWO COMPONENT, EPOXY OR HYBRID ADHESIVE DISPENSED AND MIXED THROUGH A STATIC MIXING NOZZLE PROVIDED BY THE ADHESIVE MANUFACTURER.
     - b. ADHESIVE MUST HAVE BEEN TESTED AND PREQUALIFIED FOR PERFORMANCE IN CRACKED AND UNCRACKED CONCRETE IN ACCORDANCE WITH ICC-ES AC308, INCLUDING SEISMIC SHEAR & TENSION, HORIZONTAL AND OVERHEAD INSTALLATIONS, AND LONG TERM CREEP.
4. IDENTIFY POSITION OF REINFORCING STEEL AND OTHER EMBEDDED ITEMS PRIOR TO DRILLING HOLES FOR ANCHORS. DO NOT DAMAGE EXISTING REINFORCING OR EMBEDDED ITEMS. STOP DRILLING AND NOTIFY THE COR IF REINFORCING STEEL OR OTHER EMBEDDED ITEMS ARE ENCOUNTERED DURING DRILLING.
5. INSTALL ANCHORS IN DRY HOLES IN ACCORDANCE WITH MANUFACTURER'S PRINTED INSTRUCTIONS. EMBED ANCHORS INTO THE SUBSTRATE AS INDICATED IN THE POST-INSTALLED ANCHOR SCHEDULE UON.

STRUCTURAL TESTS AND INSPECTIONS

1. STRUCTURAL TESTS AND INSPECTIONS MUST COMPLY WITH THE REQUIREMENTS OF IBC 2021, CHAPTER 17, AND PROJECT SPECIFICATIONS.

DELEGATED DESIGN

1. DELEGATED DESIGN ITEMS ARE DEFINED AS THOSE PORTIONS OF THE DESIGN THAT ARE NOT SUBMITTED AT THE TIME OF THE PERMIT APPLICATION AND THAT ARE TO BE SUBMITTED TO THE COR.
2. DEFERRAL OF SUBMITTAL ITEMS MUST HAVE THE PRIOR APPROVAL OF THE COR. THE REGISTERED DESIGN PROFESSIONAL IN RESPONSIBLE CHARGE WILL LIST THE DELEGATED DESIGN SUBMITTALS ON THE CONSTRUCTION DOCUMENTS FOR REVIEW BY THE COR.
3. DOCUMENTS FOR DELEGATED DESIGN ITEMS MUST BE SUBMITTED TO THE REGISTERED DESIGN PROFESSIONAL IN RESPONSIBLE CHARGE WHO WILL REVIEW THEM AND FORWARD THEM TO THE COR WITH NOTATION INDICATING THAT THE DELEGATED SUBMITTALS HAVE BEEN REVIEWED AND FOUND TO BE IN CONFORMANCE WITH THE PERFORMANCE REQUIREMENTS AND DESIGN CRITERIA EXPRESSED IN THE CONTRACT DOCUMENTS.
4. DELEGATED DESIGN ITEMS MUST NOT BE FABRICATED OR INSTALLED UNTIL THE SUBMITTAL DOCUMENTS HAVE BEEN REVIEWED BY THE COR.
5. DELEGATED DESIGN ITEMS FOR WHICH DRAWINGS AND CALCULATIONS ARE REQUIRED INCLUDE THE FOLLOWING:
   - A. STEEL CONNECTION DESIGN INCLUDING CONNECTIONS OF LATERAL-FORCE RESISTING SYSTEMS.
   - B. METAL STAIRS AND LADDERS. MEMBER SIZES SHOWN ARE MINIMUM.
   - C. SECURITY FENCING AT STAIR AND ASSOCIATED ATTACHMENTS TO CONCRETE .
   - D. PIPE AND TUBE RAILING.
   - E. SUPPLEMENTARY FRAMING TO SUPPORT PIPES, DUCTS, MECHANICAL EQUIPMENT, ELECTRICAL EQUIPMENT, ETC., THAT IS NOT SHOWN ON THE DRAWINGS.
   - F. TEMPORARY SHORING AND BRACING (AS REQUIRED).
   - G. PRECAST CONCRETE EQUIPMENT SHELTER.
   - H. TACAN MONITOR POLE AND TILT-DOWN STAND.
   - I. PRECAST PRESTRESSED CONCRETE PILES.
6. DELEGATED DESIGN ITEMS FOR WHICH PRODUCT DATA SHEETS AND DESIGN DRAWINGS (OR SHOP DRAWINGS, IF APPLICABLE) ARE REQUIRED INCLUDING THE FOLLOWING:
   - A. OPEN GRATING
7. COORDINATE RESTRAINTS (AS REQUIRED) OF ARCHITECTURAL, MECHANICAL, AND ELECTRICAL EQUIPMENT WITHIN THE STRUCTURE.
8. FIELD-ENGINEERED DETAILS DEVELOPED BY THE CONTRACTOR THAT DIFFER FROM OR ADD TO THE STRUCTURAL DRAWINGS MUST BE SUBMITTED FOR REVIEW AND APPROVAL PRIOR TO CONSTRUCTION.

VOR GUY WIRES

1. GUY WIRE MATERIAL MUST COMPLY WITH THE FOLLOWING:
   - A. MUST BE NON-METALLIC MATERIAL
   - B. MUST NOT INTERFERE WITH OPERATIONS OF FACILITY.
   - C. MUST BE APPROVED BY THE COR.

FOR OFFICIAL USE ONLY
PUBLIC AVAILABILITY TO BE DETERMINED UNDER 5 USC 552

ALABAMA LICENSED No. 39605 PROFESSIONAL ENGINEER 12 Sept 2025 MARK CLYDE KANONIK

JACOBS
1100 N GLEBE RD.
SUITE 500
ARLINGTON, VA 22201

REV.	APPROVED DATE	DESCRIPTION	JCN	REDLINE DATE	APVD

Jacobs

DEPARTMENT OF TRANSPORTATION
FEDERAL AVIATION ADMINISTRATION
CENTRAL SERVICE REGION — FT WORTH, TX

LEEVILLE (LEV) VORTAC REPLACEMENT

GENERAL STRUCTURAL NOTES

GRAND ISLE — LEEVILLE (LEV) VORTAC — LA

REVIEWED BY	SUBMITTED BY	APPROVED BY
	SUBMITTER'S TITLE	APPROVER'S TITLE

LEEVILLE VORTAC
GRAND ISLE, LOUISIANA

DESIGNED BY DG	ISSUED BY	DATE 9/12/2025	JCN: 1508914
DRAWN BY DG	ENGINEERING SERVICES TERMINAL	DRAWING NO. LEV - D - VORTAC - S-001	REV.
CHECKED BY MK			

PLOT DATE/TIME: 9/11/2025 9:49:37 AM

STRUCTURAL ABBREVIATIONS

&	AND
@	AT
CL	CENTER LINE

A

AB	ANCHOR BOLT
ABV	ABOVE
ACI	AMERICAN CONCRETE INSTITUTE
AD	AREA DRAIN
ADDL	ADDITIONAL
ADH	ADHESIVE
ADJ	ADJACENT
AE	AIR ENTRAINED
AFF	ABOVE FINISH FLOOR
AISC	AMERICAN INSTITUTE OF STEEL CONSTRUCTION
ALNMT	ALIGNMENT
ALT	ALTERNATE
ALUM	ALUMINUM
ANSI	AMERICAN NATIONAL STANDARDS INSTITUTE
APPROX	APPROXIMATE
AR	ANCHOR ROD
ARCH	ARCHITECT or ARCHITECTURAL
ASCE	AMERICAN SOCIETY OF CIVIL ENGINEERS
ASTM	AMERICAN SOCIETY FOR TESTING & MATERIALS
AWS	AMERICAN WELDING SOCIETY

B

B/	BOTTOM OF
B/B	BACK TO BACK
BLDG	BUILDING
BM	BEAM
BOS	BOTTOM OF STEEL
BOT	BOTTOM
BP	BASE PLATE
BRDG	BRIDGING
BRG	BEARING
BS	BOTH SIDES
BTWN	BETWEEN

C

C TO C	CENTER TO CENTER
C/C	CENTER TO CENTER
CANT	CANTILEVER
CF	CUBIC FEET
CHFR	CHAMFER
CIP	CAST-IN-PLACE
CJ	CONTROL JOINT
CJP	COMPLETE JOINT PENETRATION
CL	CENTER LINE
CLR	CLEAR
CLSM	CONTROLLED LOW STRENGTH MATERIALS
CMU	CONCRETE MASONRY UNIT
CO	CLEAN OUT
COL	COLUMN
CONC	CONCRETE
CONN	CONNECTION
CONST	CONSTRUCTION
CONT	CONTINUOUS
CONTR	CONTRACTOR
COORD	COORDINATE
COR	CONTRACTING OFFICER'S REPRESENTATIVE
CSJ	CONSTRUCTION JOINT
CTRD	CENTERED
CY	CUBIC YARD

D

D	DEPTH
db	REINFORCING BAR DIAMETER
DBA	DEFORMED BAR ANCHOR
DBL	DOUBLE
DIA	DIAMETER
DIAG	DIAGONAL
DIM	DIMENSION
DL	DEAD LOAD
DN	DOWN
DTL	DETAIL
DWG(S)	DRAWING(S)
DWLS	DOWELS

E

(E)	EXISTING
EA	EACH
EE	EACH END
EF	EACH FACE
EJ	EXPANSION JOINT
EL	ELEVATION
ELECT	ELECTRIC or ELECTRICAL
ELEV	ELEVATOR
EMBED	EMBEDMENT
EOG	EDGE OF GRATING
EOS	EDGE OF SLAB
EQ	EQUAL
EQUIP	EQUIPMENT
ES	EACH SIDE
EST	ESTIMATE
ETC	ETCETERA
EW	EACH WAY
EXIST	EXISTING
EXP JT	EXPANSION JOINT
EXT	EXTERIOR

F

FA	FALL ARREST ANCHOR
FD	FLOOR DRAIN
FDN	FOUNDATION
FG	FINISH GRADE
FIN	FINISH or FINISHED
FLG	FLANGE
FLR	FLOOR
FOB	FACE OF BUILDING
FOW	FACE OF WALL
FP	FIRE PROTECTION
FS	FAR SIDE
FT	FOOT or FEET
FTG	FOOTING
FV	FIELD VERIFY

G

GA	GAGE or GAUGE
GALV	GALVANIZED
GC	GENERAL CONTRACTOR
GR	GRADE
GRTG	GRATING

H

HI	HIGH
HCA	HEADED CONCRETE ANCHOR
HGR	HANGER
HK	HOOK
HORZ	HORIZONTAL
HP	HIGH POINT
HPC	HIGH PERFORMANCE COATING
HS	HIGH STRENGTH
HSA	HEADED SHEAR ANCHOR
HT	HEIGHT
HVAC	HEATING, VENTILATING, AND AIR CONDITIONING

I

ID	INSIDE DIAMETER
IF	INSIDE FACE
IN	INCH
INCL	INCLUDED
INFO	INFORMATION
INT	INTERIOR

J

JF	JOINT FILLER
JT	JOINT

K

K	KIPS (1000 POUNDS)
KB	KNEE BRACE
KOP	KNOCK OUT PANEL
KSF	KIPS PER SQUARE FOOT
KSI	KIPS PER SQUARE INCH

L

L	LENGTH
LB(S)	POUND(S)
Ld	REINF BAR DEVELOPMENT LENGTH
LE	LEFT END
LL	LIVE LOAD
LLH	LONG LEG HORIZONTAL
LLV	LONG LEG VERTICAL
LO	LOW
LOC	LOCATIONS
LP	LOW POINT
LW	LIGHT WEIGHT

M

MANF	MANUFACTURE(R)
MAS	MASONRY
MATL	MATERIAL
MAX	MAXIMUM
MC	MOMENT CONNECTION
MSL	MEAN SEA LEVEL
MECH	MECHANICAL
MEP	MECH, ELECT AND PLUMB
MEZZ	MEZZANINE
MID	MIDDLE
MIN	MINIMUM
MISC	MISCELLANEOUS
MTL	METAL

N

N	NORTH
N	NEWTON
(N)	NEW
NA	NOT APPLICABLE
NIC	NOT IN CONTRACT
NOM	NOMINAL
No. or #	NUMBER
NS	NEAR SIDE
NTS	NOT TO SCALE
NW	NORMAL WEIGHT

O

OC	ON CENTER
OD	OUTSIDE DIAMETER
OF	OUTSIDE FACE
OPNG	OPENING
OPP	OPPOSITE or OPPOSITE HAND

P

PAF	POWER ACTUATED FASTENER
PC	PILE CAP
P/C	PRECAST CONCRETE
PEN	PENETRATION
PJF	PREFABRICATED JOINT FILLER
PJP	PARTIAL JOINT PENETRATION
PL	PLATE
PLUMB	PLUMBING
PROJ	PROJECTION
PS	PRESTRESSED
PSF	POUND PER SQUARE FOOT
PSI	POUND PER SQUARE INCH
PT	POST-TENSIONED, PRETENSIONED (JOINT TYPE)

R

R	RISER or RADIUS
RAD	RADIUS
RE	RIGHT END
REBAR	REINFORCING STEEL BARS
REF	REFERENCE
REINF	REINFORCEMENT or REINFORCING
REQD	REQUIRED
RET	RETURN
REV	REVISION
RFI	REQUEST FOR INFORMATION
RTU	ROOF TOP UNIT

S

SC	SLIP-CRITICAL (JOINT TYPE)
SCHED	SCHEDULE
SDI	STEEL DECK INSTITUTE
SDL	SUPERIMPOSED DEAD LOAD
SEC	SECTION
SHT	SHEET
SIM	SIMILAR
SK	SKETCH
SLRS	SEISMIC LOAD RESISTING SYSTEM
SLV	SLEEVE
SOG	SLAB-ON-GRADE
SPA	SPACE
SPEC	SPECIFICATION
SQ	SQUARE
SS	STAINLESS STEEL
ST	SNUG-TIGHTENED (JOINT TYPE)
STAG	STAGGERED
STD	STANDARD
STIF	STIFFENER
STIR	STIRRUPS
STL	STEEL
STRUC	STRUCTURAL
SUPT	SUPPORT
SW	SHEAR WALL
SYMM	SYMMETRICAL or SYMMETRY

T

T/	TOP OF
TB	THROUGH BOLT
T&B	TOP AND BOTTOM
TEMP	TEMPORARY
TF	TOP OF FOOTING
THK	THICK or THICKNESS
THRU	THROUGH
TMS	THE MASONRY SOCIETY
TOC	TOP OF CONCRETE
TOL	TOLERANCE
TOS	TOP OF SLAB
TYP	TYPICAL

U

UON	UNLESS OTHERWISE NOTED

V

V	VERTICAL
VERT	VERTICAL
VR	VAPOR RETARDER
VIF	VERIFY IN FIELD

W

W	WIDTH
W/	WITH
W/C	WATER-CEMENTITIOUS MATL RATIO
W/O	WITHOUT
WP	WATERPROOFING
WP	WORK POINT
WS	WATERSTOP
WT	WEIGHT
WWR	WELDED WIRE REINFORCEMENT

STRUCTURAL LEGEND

FOUNDATIONS
MF# MAT FOUNDATION MARK

BEAMS
W# STEEL BEAM MARK

SLABS/DECKS/GRATING
BG# BAR GRATING MARK

OTHER
BP# STEEL BASE PLATE MARK

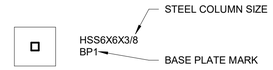

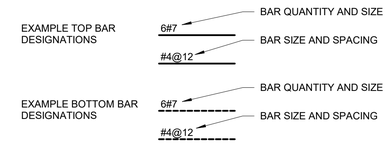

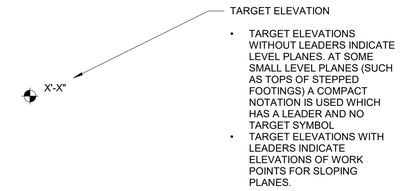

HATCH PATTERNS/MATERIALS

- CONCRETE
- EARTH
- GRAVEL
- GROUT/MORTAR
- STEEL
- REBAR

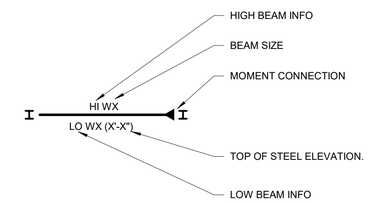

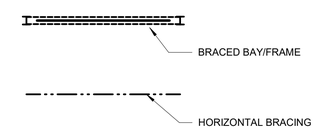

FOR OFFICIAL USE ONLY
PUBLIC AVAILABILITY TO BE DETERMINED UNDER 5 USC 552

REV.	APPROVED DATE	DESCRIPTION	JCN	REDLINE DATE	APVD

JACOBS
1100 N GLEBE RD.
SUITE 500
ARLINGTON, VA 22201

ALABAMA LICENSED No. 39605 PROFESSIONAL 12 Sept 2025 ENGINEER MARK CLYDE KANOWITZ

Jacobs

DEPARTMENT OF TRANSPORTATION
FEDERAL AVIATION ADMINISTRATION
CENTRAL SERVICE REGION — FT WORTH, TX

LEEVILLE (LEV) VORTAC REPLACEMENT

STRUCTURAL ABBREVIATIONS, SYMBOLS, LEGEND

GRAND ISLE — LEEVILLE (LEV) VORTAC — LA

REVIEWED BY	SUBMITTED BY	APPROVED BY
	SUBMITTER'S TITLE	APPROVER'S TITLE

LEEVILLE VORTAC
GRAND ISLE, LOUISIANA

DESIGNED BY	DG	ISSUED BY: ENGINEERING SERVICES TERMINAL	DATE 9/12/2025 — JCN: 1508914
DRAWN BY	DG		DRAWING NO. LEV - D - VORTAC - S-002 — REV.
CHECKED BY	MK		

PLOT DATE/TIME: 9/11/2025 9:49:37 AM

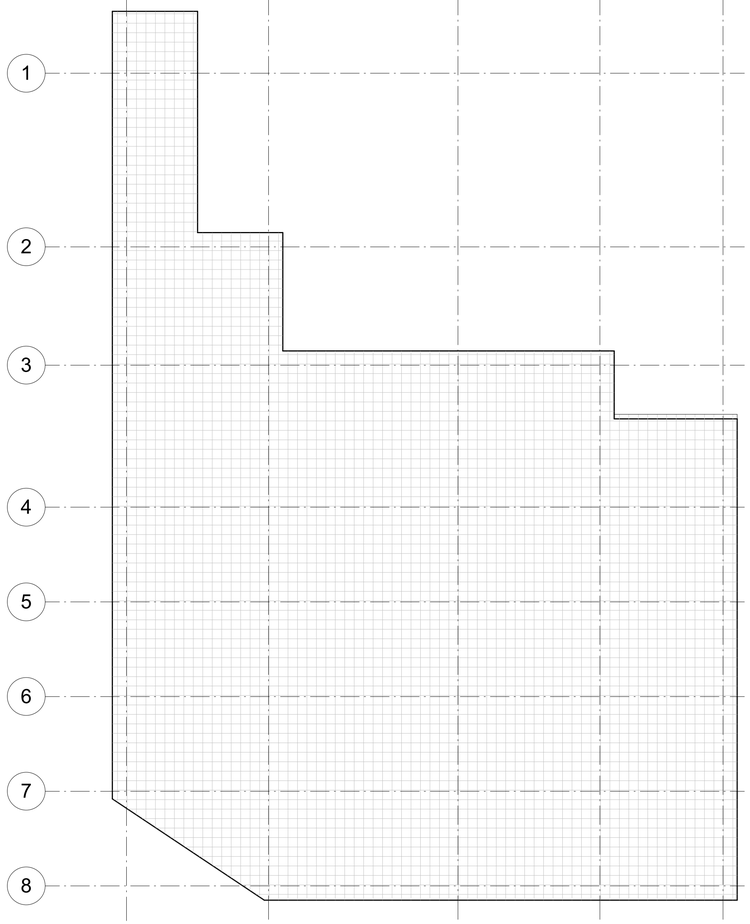

C8 FOUNDATION LOAD PLAN
1/8" = 1'-0"

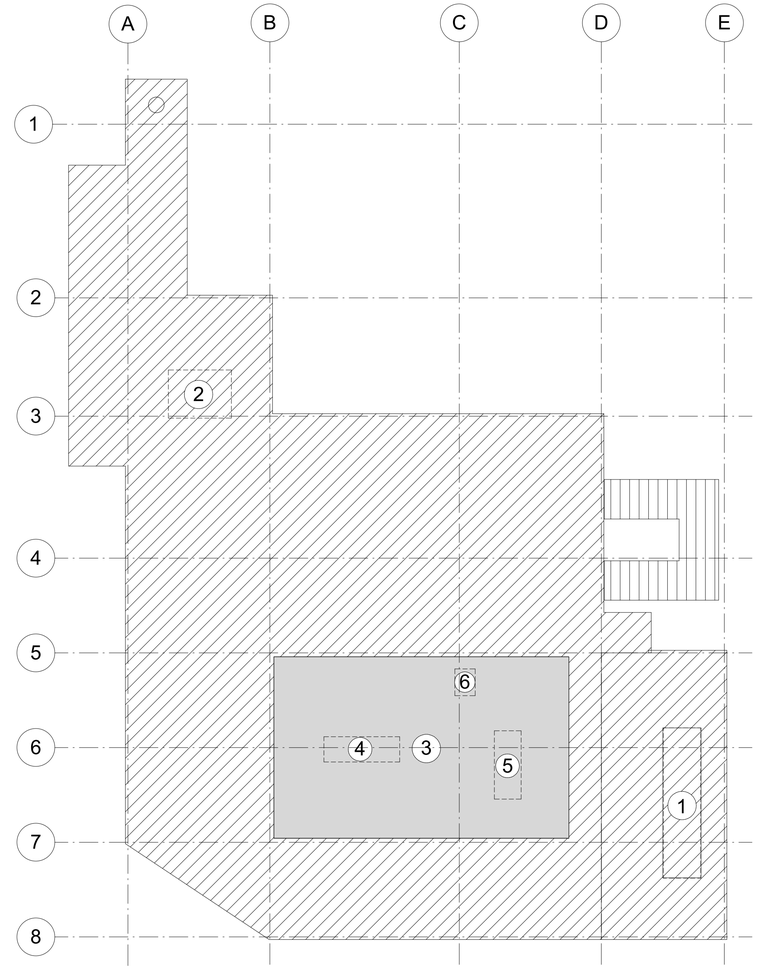

C6 PLATFORM LEVEL LOAD PLAN
1/8" = 1'-0"

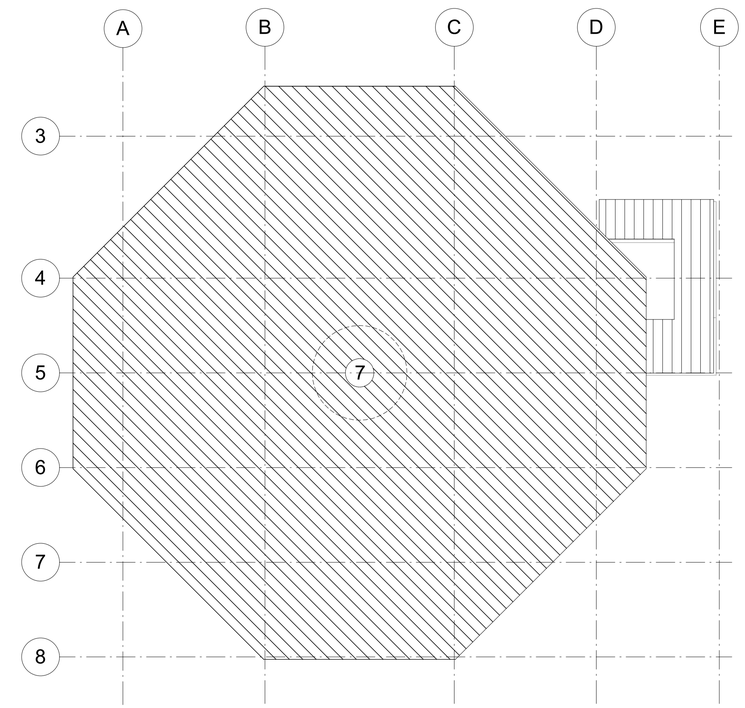

C3 COUNTERPOISE LEVEL LOAD PLAN
1/8" = 1'-0"

N

8 0 8 16
Scale: 1/8 INCH = 1 FOOT

FOR OFFICIAL USE ONLY
PUBLIC AVAILABILITY TO BE DETERMINED UNDER 5 USC 552

MAJOR EQUIPMENT LOADS AND DIMENSIONS			
MARK	EQUIPMENT NAME	WEIGHT	DIMENSIONS
1	PROPANE TANK (1000 GALLONS)	6.5 KIPS	15'-10" L X 3'-4" W X 3'-6" H
2	TRANSFORMER	3 KIPS	6'-0" L X 4'-5" W X 4'-2" H
3	EQUIPMENT SHELTER	170 KIPS	31'-0" L X 19'-0" W X 11'-4" H
4	ELECTRONIC EQUIPMENT CABINETS	8 KIPS	8'-0" L X 2'-8" W X 7'-0" H
5	ENGINE GENERATOR	2 KIPS	7'-2" L X 2'-10" W X 3'-10" H
6	AUTOMATIC TRANSFER SWITCH	1 KIP	2'-10" L X 2'-4" W X 7'-0" H
7	ANTENNA ENCLOSURE	1 KIP	10'-0" DIA x 16'-0" H

NOTIFY CONTRACTING OFFICER'S REPRESENTATIVE IF ACTUAL WEIGHTS OR DIMENSIONS ARE LARGER THAN THOSE ASSUMED ABOVE.

LIVE LOADS		
HATCH	AREA	UNIFORM LIVE LOAD
	MAT FOUNDATION	125 PSF
	PLATFORM LEVEL	60 PSF
	EQUIPMENT SHELTER ROOM	80 PSF
	COUNTERPOISE LEVEL	25 PSF
	STAIRS	100 PSF

ALABAMA LICENSED No. 39605 PROFESSIONAL ENGINEER 12 Sept 2025 MARK CLYDE KAJIONIS

JACOBS
1100 N GLEBE RD.
SUITE 500
ARLINGTON, VA 22201

REV.	APPROVED DATE	DESCRIPTION	JCN	REDLINE DATE	APVD

DEPARTMENT OF TRANSPORTATION
FEDERAL AVIATION ADMINISTRATION
CENTRAL SERVICE REGION — FT WORTH, TX

LEEVILLE (LEV) VORTAC REPLACEMENT

LOAD PLANS

GRAND ISLE — LEEVILLE (LEV) VORTAC — LA

LEEVILLE VORTAC
GRAND ISLE, LOUISIANA

REVIEWED BY	
SUBMITTED BY	
SUBMITTER'S TITLE	
APPROVED BY	
APPROVER'S TITLE	
DESIGNED BY	DG
DRAWN BY	DG
CHECKED BY	MK
ISSUED BY	ENGINEERING SERVICES TERMINAL
DATE	9/12/2025
JCN:	1508914
DRAWING NO.	LEV - D - VORTAC - S-003
REV.	

PLOT DATE/TIME: 9/11/2025 9:49:37 AM

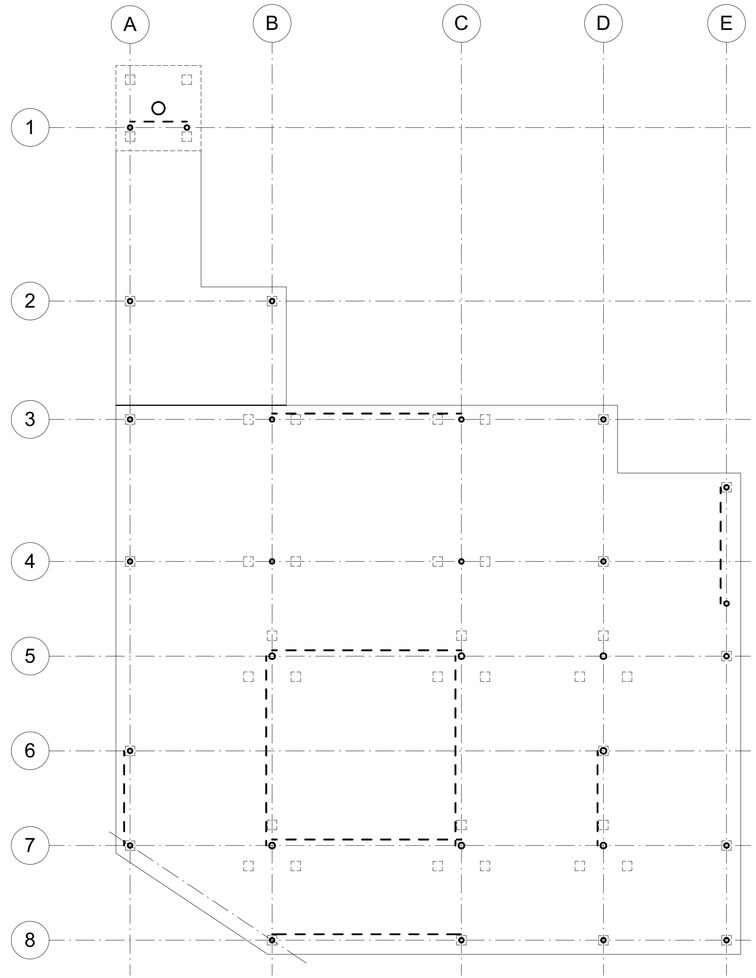

C8 FOUNDATION PLAN - OVERALL
1/8" = 1'-0"

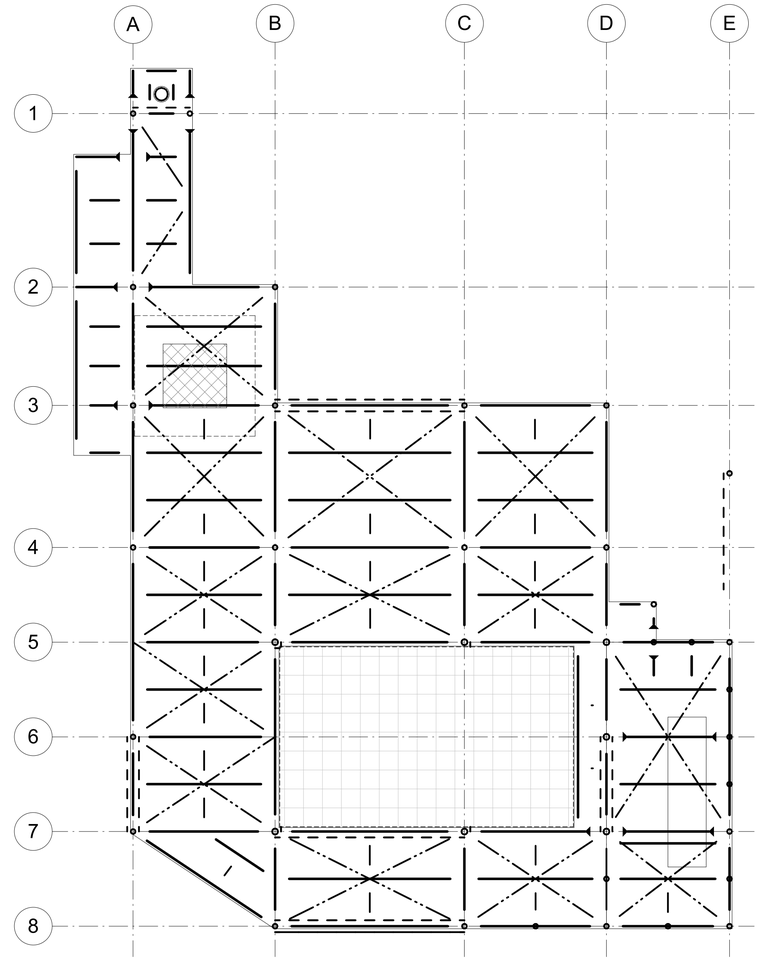

C6 EQUIPMENT SHELTER PLATFORM FRAMING PLAN - OVERALL
1/8" = 1'-0"

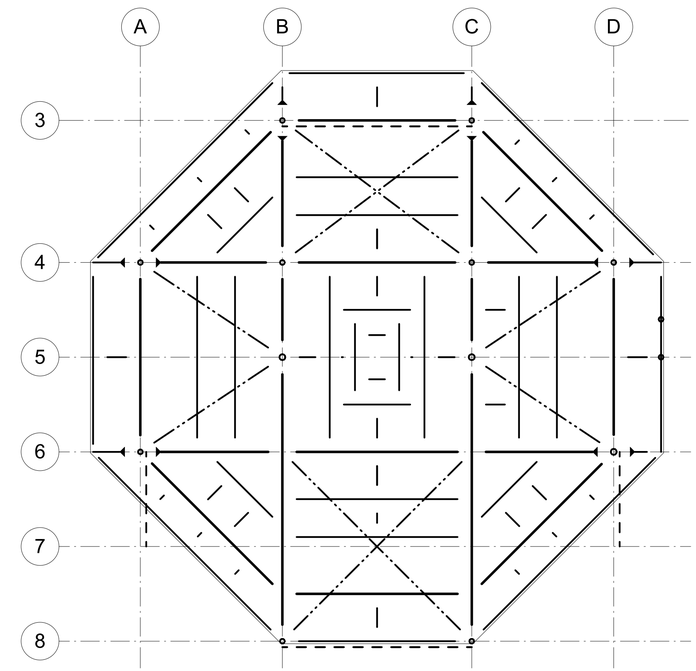

C3 COUNTERPOISE FRAMING PLAN - OVERALL
1/8" = 1'-0"

8 0 8 16
Scale: 1/8 INCH = 1 FOOT

FOR OFFICIAL USE ONLY
PUBLIC AVAILABILITY TO BE DETERMINED UNDER 5 USC 552

JACOBS
1100 N GLEBE RD.
SUITE 500
ARLINGTON, VA 22201

REV.	APPROVED DATE	DESCRIPTION	JCN	REDLINE DATE	APVD

ALABAMA LICENSED
No. 39605
PROFESSIONAL ENGINEER
12 Sept 2025
MARK CLYDE KANONIK

Jacobs

DEPARTMENT OF TRANSPORTATION
FEDERAL AVIATION ADMINISTRATION
CENTRAL SERVICE REGION FT WORTH, TX

LEEVILLE (LEV) VORTAC REPLACEMENT

OVERALL PLANS

GRAND ISLE LEEVILLE (LEV) VORTAC LA

REVIEWED BY | SUBMITTED BY | APPROVED BY
SUBMITTER'S TITLE | APPROVER'S TITLE

LEEVILLE VORTAC
GRAND ISLE, LOUISIANA

DESIGNED BY DG
DRAWN BY DG
CHECKED BY MK

ISSUED BY
ENGINEERING SERVICES TERMINAL

DATE 9/12/2025 JCN: 1508914
DRAWING NO. LEV - D - VORTAC - S-101
REV.

PLOT DATE/TIME: 9/11/2025 9:49:38 AM

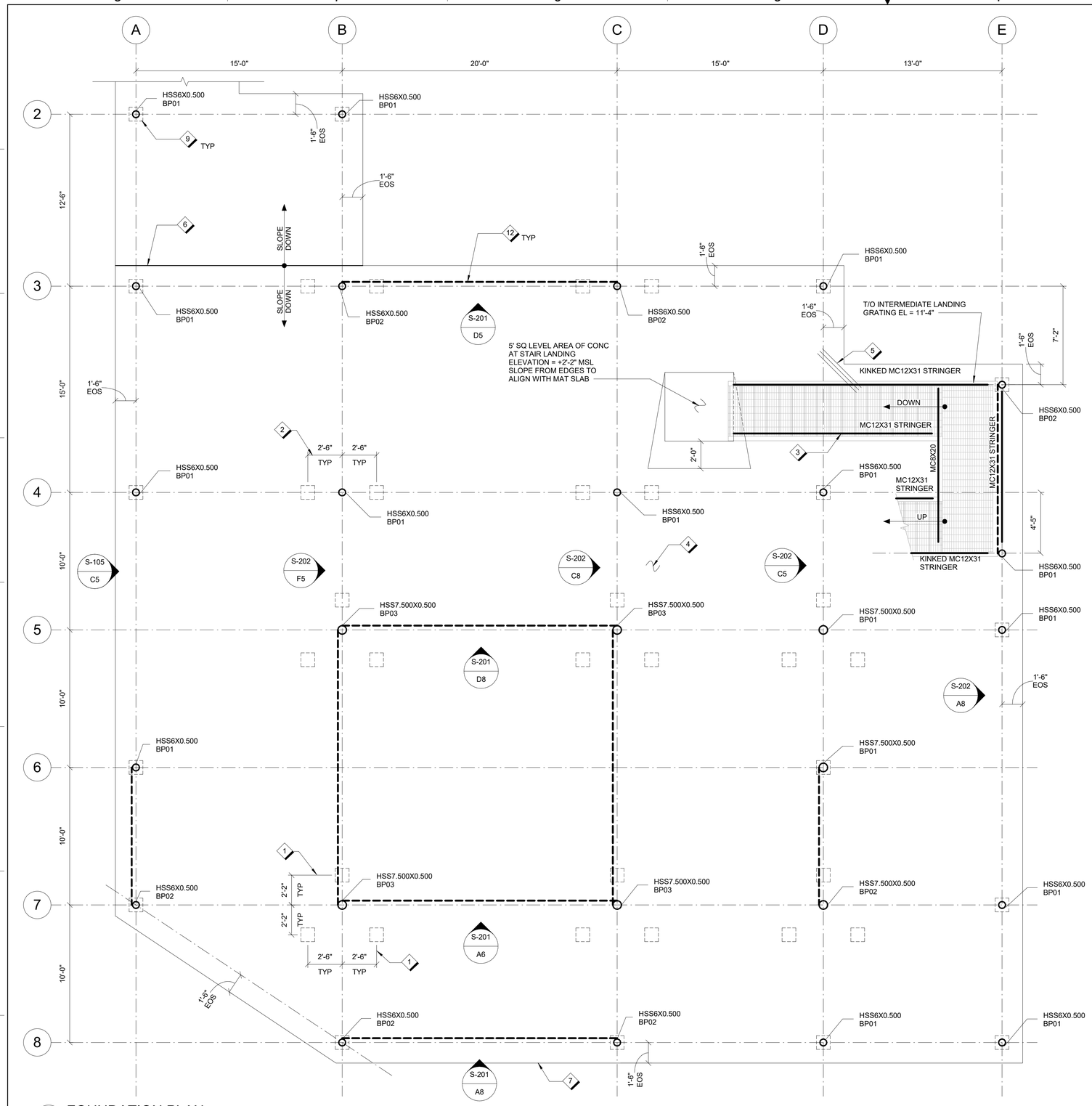

A8 FOUNDATION PLAN
1/4" = 1'-0"

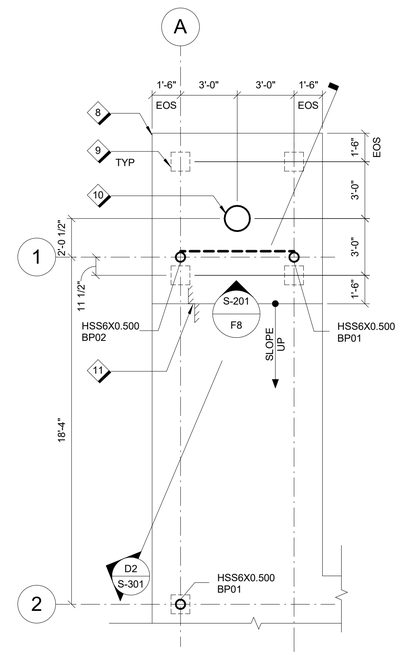

Scale: 1/4 INCH = 1 FOOT

GENERAL SHEET NOTES

A. TOP OF MAT ELEVATION = VARIES; REFER TO PLAN.

B. ALL COLUMNS ARE CENTERED ON GRID INTERSECTIONS UNLESS OTHERWISE NOTED.

SHEET NOTES

1 TYPICAL DIMENSIONS FOR 3 PILE CONFIGURATION
2 TYPICAL DIMENSIONS FOR 2 PILE CONFIGURATION
3 STAIR BY OTHERS, STRINGERS SHOWN ON DRAWINGS ARE MINIMUM SIZES
4 18" THICK MAT FOUNDATION, REINFORCED W/ #7@12" OC TOP & BOTTOM EACH WAY. REFER TO DETAIL A8/S-501. ELEVATION VARIES.
5 (3) #4 X 4'-0" DIAGONAL BARS (TOP & BOTTOM) @ RE-ENTRANT CORNER
6 ELEVATION = +2'-3" MSL, MAT FOUNDATION HIGH POINT
7 ELEVATION = +1'-6" MSL, MAT FOUNDATION LOW POINT
8 36" THK MAT FOUNDATION, REINFORCED W/ #7 @ 12" OC TOP & BOTTOM EACH WAY, REFER TO DETAIL F8/S-301. ELEVATION = +3'-5" MSL
9 12" PRECAST/PRESTRESSED CONCRETE PILE
10 TACAN MONITOR TOWER
11 ELEVATION AT LOW SIDE OF STEP = +1'-11" MSL. ELEVATION AT HIGH SIDE OF STEP = +3'-5" MSL.
12 VERTICAL BRACE

FOR OFFICIAL USE ONLY
PUBLIC AVAILABILITY TO BE DETERMINED UNDER 5 USC 552

JACOBS
1100 N GLEBE RD.
SUITE 500
ARLINGTON, VA 22201

REV.	APPROVED DATE	DESCRIPTION	JCN	REDLINE DATE	APVD

DEPARTMENT OF TRANSPORTATION
FEDERAL AVIATION ADMINISTRATION
CENTRAL SERVICE REGION — FT WORTH, TX

LEEVILLE (LEV) VORTAC REPLACEMENT

FOUNDATION PLAN

GRAND ISLE — LEEVILLE (LEV) VORTAC — LA

ALABAMA LICENSED No. 39605 PROFESSIONAL ENGINEER 12 Sept 2025 MARK CLYDE KANONIK

Jacobs

LEEVILLE VORTAC
GRAND ISLE, LOUISIANA

REVIEWED BY | SUBMITTED BY | APPROVED BY
SUBMITTER'S TITLE | APPROVER'S TITLE
DESIGNED BY DG
DRAWN BY DG
CHECKED BY MK
ISSUED BY: ENGINEERING SERVICES TERMINAL
DATE 9/12/2025 | JCN: 1508914
DRAWING NO. LEV - D - VORTAC - S-102 | REV.

PLOT DATE/TIME: 9/11/2025 9:49:38 AM

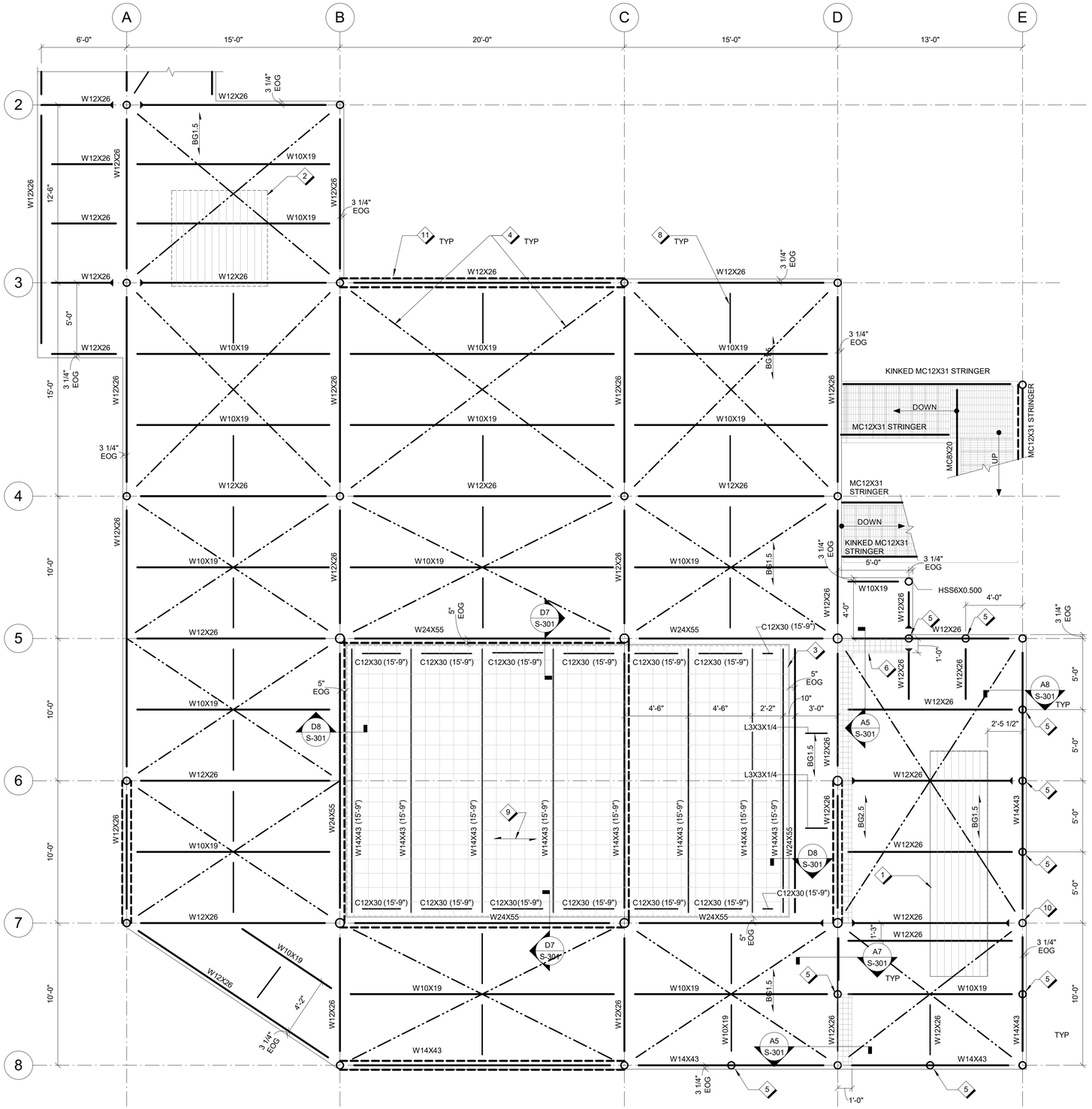

A8 EQUIPMENT SHELTER PLATFORM FRAMING PLAN - PART 1

1/4" = 1'-0"

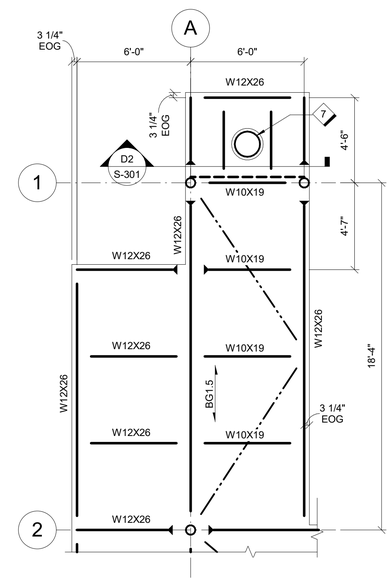

Scale: 1/4 INCH = 1 FOOT

GENERAL SHEET NOTES

A. TOP OF STEEL ELEVATION = 16'-7 1/2" UNLESS OTHERWISE NOTED. FOR STEEL SUPPORTS AT PRECAST CONCRETE EQUIPMENT SHELTER, COORDINATE FINAL ELEVATION WITH SLAB THICKNESS PER DELEGATED DESIGN ENGINEER.

B. TOP OF 1-1/2" THK BAR GRATING ELEVATION = 16'-9" UON.

C. TOP OF 2-1/2" THK BAR GRATING ELEVATION = 16'-10" UON.

D. ⟷ INDICATES SPAN DIRECTION OF GALVANIZED OPEN STEEL GRATING. REFER TO SCHEDULE ON S-551 FOR INFORMATION.

E. RAILING AROUND PERIMETER OF EQUIPMENT SHELTER PLATFORM LEVEL NOT SHOWN FOR CLARITY.

F. BEAMS ARE EQUALLY SPACED BETWEEN GIRDERS UON.

SHEET NOTES

1 PROPANE TANK ATOP 1-1/2" BAR GRATING.
2 TRANSFORMER ATOP 6X6 PT TIMBERS, REFER TO DETAIL D5/S301.
3 PRECAST CONCRETE EQUIPMENT SHELTER. TOP OF FINISHED FLOOR FLUSH WITH TOP OF GRATING.
4 L4X4X3/8 LLV; AXIAL LOAD = +/- 15 KIPS. RECESS 1" BELOW TOP OF W BEAM.
5 HSS6X0.500 METAL PLATE WALL POST
6 EXTENTS OF SLOPED GRATING
7 TACAN MONITOR TOWER
8 L3X3X1/4, RECESS 1" BELOW TOP OF W BEAM
9 PRECAST CONCRETE EQUIPMENT SHELTER FLOOR SLAB. FLOOR SLAB MUST BE CAPABLE OF SPANNING BETWEEN STEEL SUPPORTS. FINAL THICKNESS AND REINFORCEMENT PER DELEGATED DESIGN ENGINEER.
10 500-LB RATED MANUAL HOIST LOCATION FOR TANK REFUELING OPERATIONS. T/COL AT HOIST = 25'-9 1/2". SEE D5/S-301.
11 VERTICAL BRACE

FOR OFFICIAL USE ONLY
PUBLIC AVAILABILITY TO BE DETERMINED UNDER 5 USC 552

ALABAMA LICENSED No. 39605 PROFESSIONAL ENGINEER 12 Sept 2025 MARK CLYDE KAWONIK

JACOBS
1100 N GLEBE RD.
SUITE 500
ARLINGTON, VA 22201

REV.	APPROVED DATE	DESCRIPTION	JCN	REDLINE DATE	APVD

DEPARTMENT OF TRANSPORTATION
FEDERAL AVIATION ADMINISTRATION
CENTRAL SERVICE REGION — FT WORTH, TX

LEEVILLE (LEV) VORTAC REPLACEMENT

EQUIPMENT SHELTER PLATFORM FRAMING PLAN

GRAND ISLE — LEEVILLE (LEV) VORTAC — LA

REVIEWED BY | SUBMITTED BY | APPROVED BY
SUBMITTER'S TITLE | APPROVER'S TITLE
DESIGNED BY DG | DRAWN BY DG | CHECKED BY MK
ISSUED BY: ENGINEERING SERVICES TERMINAL
DATE 9/12/2025 | JCN: 1508914
DRAWING NO. LEV - D - VORTAC - S-103 | REV.

LEEVILLE VORTAC
GRAND ISLE, LOUISIANA

PLOT DATE/TIME: 9/11/2025 9:49:39 AM

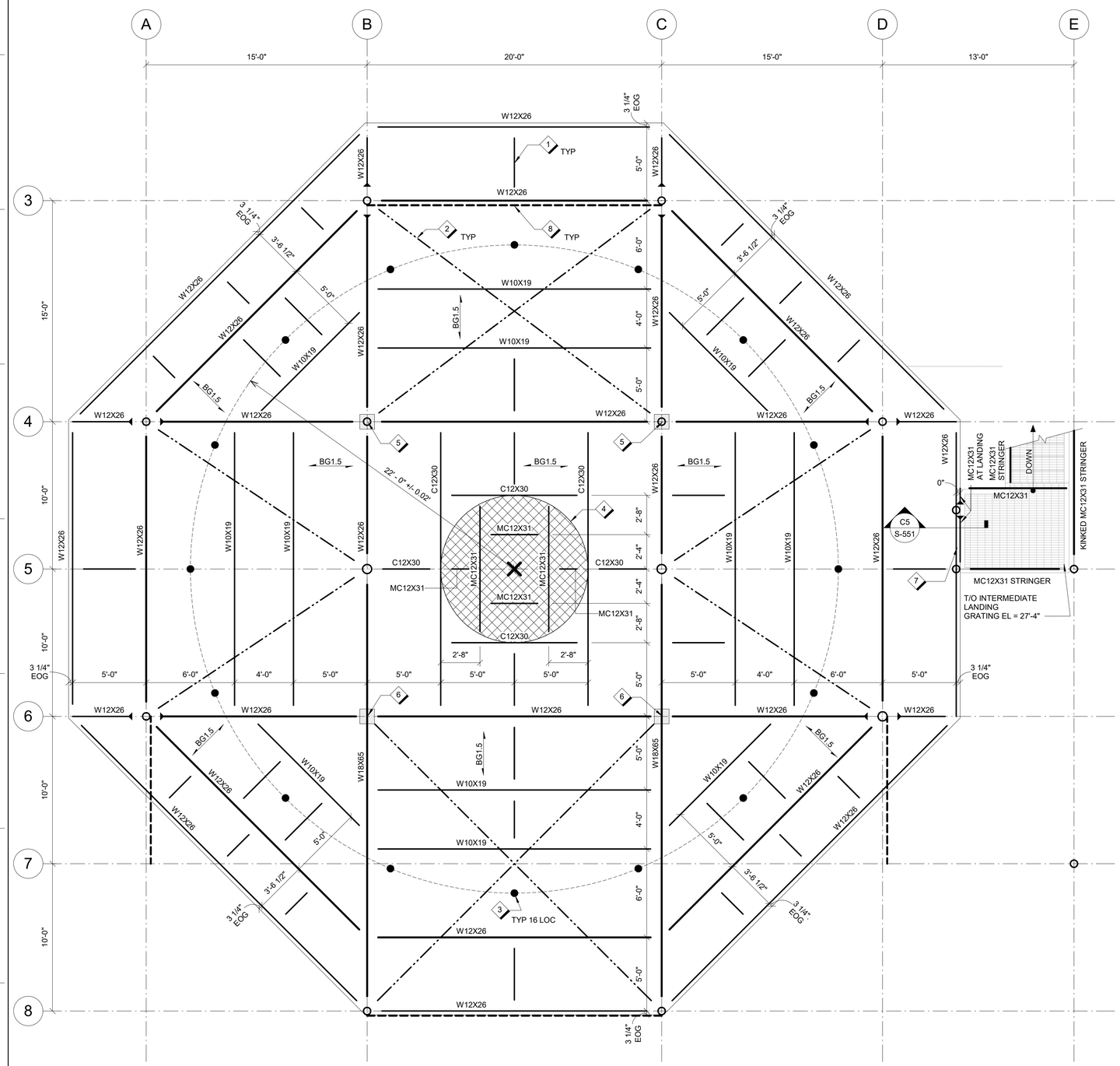

A8 COUNTERPOISE FRAMING PLAN
1/4" = 1'-0"

GENERAL SHEET NOTES

A. TOP OF STEEL ELEVATION = 32'-3 1/2" UON.

B. TOP OF GRATING ELEVATION = 32'-5".

C. ⟷ INDICATES SPAN DIRECTION OF GALVANIZED OPEN STEEL GRATING. REFER TO SCHEDULE ON S-551 FOR INFORMATION.

D. BEAMS ARE EQUALLY SPACED BETWEEN GIRDERS UON.

SHEET NOTES

1 L3X3X1/4, RECESS 1" BELOW TOP OF W BEAM
2 L4X4X3/8 LLV; AXIAL LOAD = +/- 15 KIPS. RECESS 1" BELOW TOP OF W BEAM.
3 VOR MONITOR ANTENNA LOCATIONS
4 ANTENNA ENCLOSURE (OWNER FURNISHED, CONTRACTOR INSTALLED)
5 ANCHOR FOR ANTENNA CONE GUYS AT TOP OF COLUMN. T/COL AT ANCHOR LOCATIONS = 32'-4 1/2". SEE C8/S-541.
6 ANCHOR FOR ANTENNA CONE GUYS AT TOP OF BEAM. SEE E8/S-541.
7 PROVIDE 3/4" DIA EYEBOLT FOR PORTABLE LADDER HOOK TIE OFF ATTACHED TO WEB OF BEAM
8 VERTICAL BRACE

4 0 4 8
Scale: 1/4 INCH = 1 FOOT

FOR OFFICIAL USE ONLY
PUBLIC AVAILABILITY TO BE DETERMINED UNDER 5 USC 552

JACOBS
1100 N GLEBE RD.
SUITE 500
ARLINGTON, VA 22201

REV.	APPROVED DATE	DESCRIPTION	JCN	REDLINE DATE	APVD

DEPARTMENT OF TRANSPORTATION
FEDERAL AVIATION ADMINISTRATION
CENTRAL SERVICE REGION — FT WORTH, TX

LEEVILLE (LEV) VORTAC REPLACEMENT

COUNTERPOISE FRAMING PLAN

GRAND ISLE — LEEVILLE (LEV) VORTAC — LA

ALABAMA LICENSED No. 39605 PROFESSIONAL ENGINEER 12 Sept 2025 MARK CLYDE KANONIK

Jacobs

REVIEWED BY | SUBMITTED BY | APPROVED BY
SUBMITTER'S TITLE | APPROVER'S TITLE

LEEVILLE VORTAC
GRAND ISLE, LOUISIANA

DESIGNED BY DG
DRAWN BY DG
CHECKED BY MK

ISSUED BY: ENGINEERING SERVICES TERMINAL

DATE 9/12/2025 JCN 1508914
DRAWING NO. LEV - D - VORTAC - S-104
REV.

PLOT DATE/TIME: 9/11/2025 9:49:40 AM

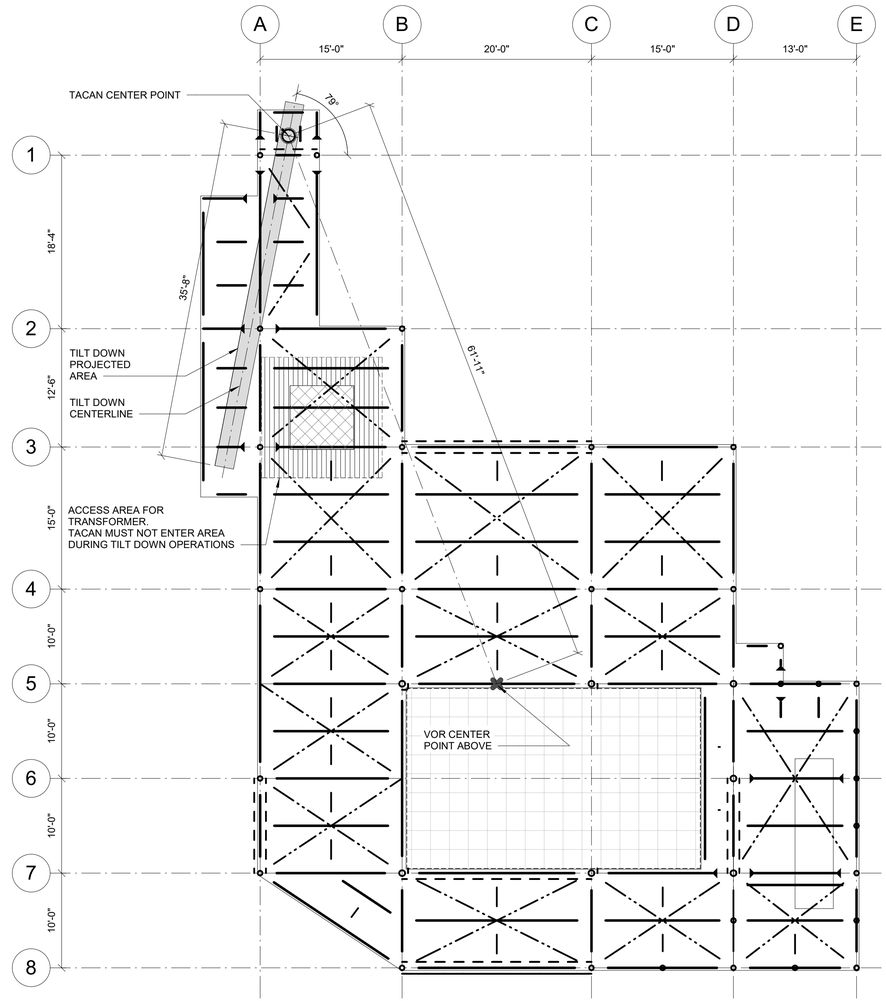

C8 TACAN COUNTER WEIGHTED TILT DOWN PLAN
1/8" = 1'-0"

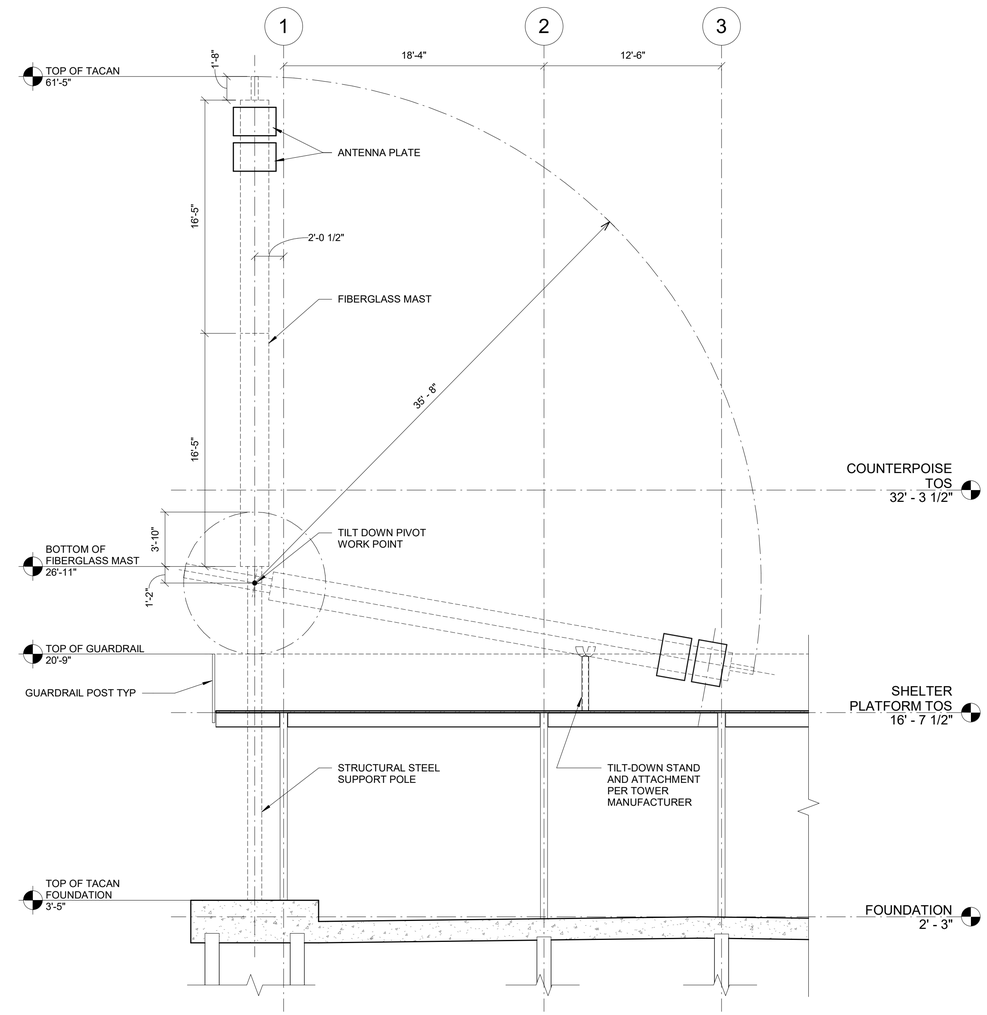

C5 TACAN COUNTER WEIGHTED TILT DOWN SECTION
3/16" = 1'-0"

FOR OFFICIAL USE ONLY
PUBLIC AVAILABILITY TO BE DETERMINED UNDER 5 USC 552

REV.	APPROVED DATE	DESCRIPTION	JCN	REDLINE DATE	APVD

JACOBS
1100 N GLEBE RD.
SUITE 500
ARLINGTON, VA 22201

ALABAMA LICENSED No. 39605 PROFESSIONAL ENGINEER 12 Sept 2025 MARK CLYDE KAMONIK

Jacobs

DEPARTMENT OF TRANSPORTATION
FEDERAL AVIATION ADMINISTRATION
CENTRAL SERVICE REGION — FT WORTH, TX

LEEVILLE (LEV) VORTAC REPLACEMENT

TACAN TILT DOWN PLAN AND SECTION

GRAND ISLE — LEEVILLE (LEV) VORTAC — LA

REVIEWED BY | SUBMITTED BY | APPROVED BY
SUBMITTER'S TITLE | APPROVER'S TITLE
DESIGNED BY DG | ISSUED BY ENGINEERING SERVICES TERMINAL | DATE 9/12/2025 | JCN: 1508914
DRAWN BY DG | DRAWING NO. LEV - D - VORTAC - S-105 | REV.
CHECKED BY MK

LEEVILLE VORTAC
GRAND ISLE, LOUISIANA

PLOT DATE/TIME: 9/11/2025 9:49:40 AM

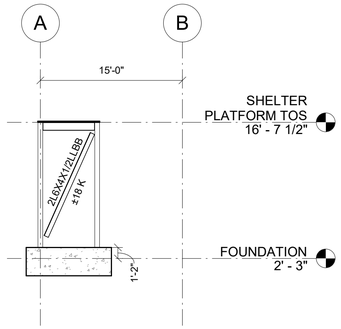

F8 ELEVATION GRID 1
1/8" = 1'-0"

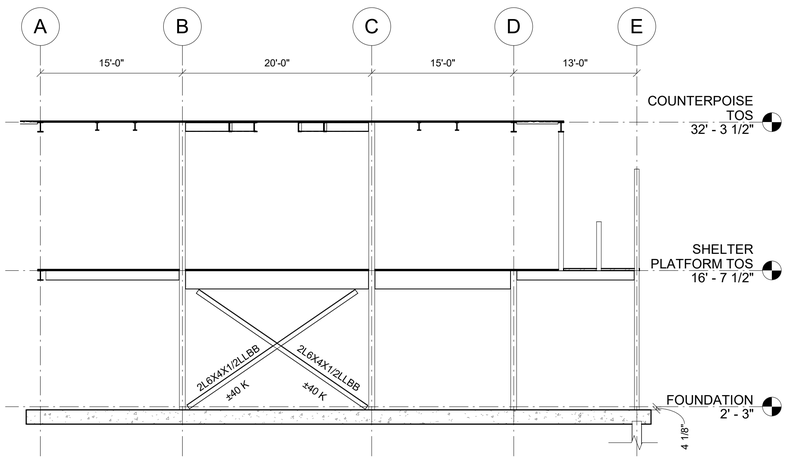

D8 ELEVATION GRID 5
1/8" = 1'-0"

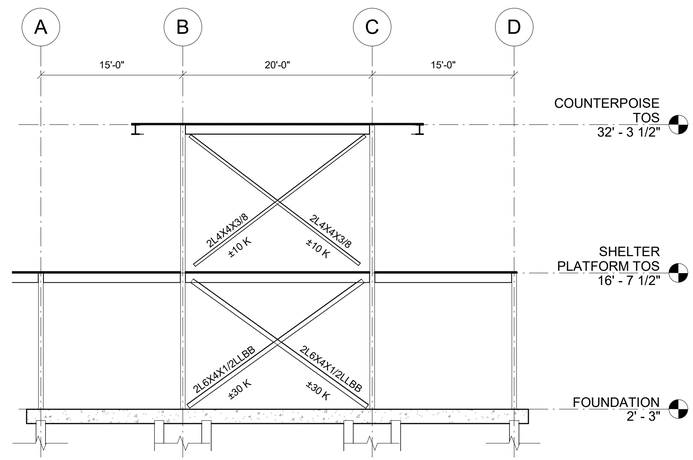

D5 ELEVATION GRID 3
1/8" = 1'-0"

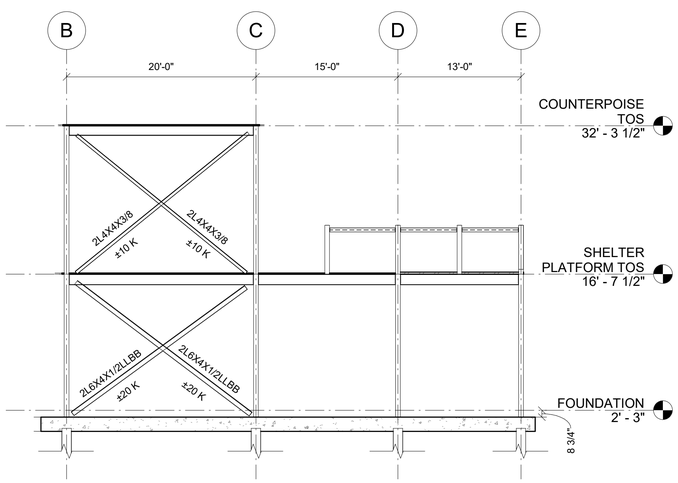

A8 ELEVATION GRID 8
1/8" = 1'-0"

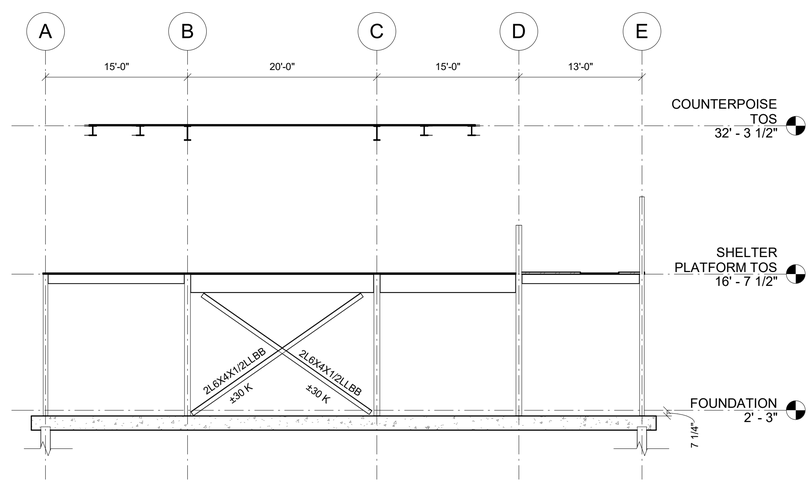

A6 ELEVATION GRID 7
1/8" = 1'-0"

8 0 8 16
Scale: 1/8 INCH = 1 FOOT

FOR OFFICIAL USE ONLY
PUBLIC AVAILABILITY TO BE DETERMINED UNDER 5 USC 552

ALABAMA LICENSED
No. 39605
PROFESSIONAL ENGINEER
12 Sept 2025
MARK CLYDE KANONIK

JACOBS
1100 N GLEBE RD.
SUITE 500
ARLINGTON, VA 22201

REV.	APPROVED DATE	DESCRIPTION	JCN	REDLINE DATE	APVD

Jacobs

DEPARTMENT OF TRANSPORTATION
FEDERAL AVIATION ADMINISTRATION
CENTRAL SERVICE REGION — FT WORTH, TX

LEEVILLE (LEV) VORTAC REPLACEMENT

BRACING ELEVATIONS

GRAND ISLE — LEEVILLE (LEV) VORTAC — LA

REVIEWED BY | SUBMITTED BY | APPROVED BY
SUBMITTER'S TITLE | APPROVER'S TITLE

LEEVILLE VORTAC
GRAND ISLE, LOUISIANA

DESIGNED BY DG
DRAWN BY DG
CHECKED BY MK

ISSUED BY: ENGINEERING SERVICES TERMINAL

DATE 9/12/2025 | JCN: 1508914
DRAWING NO. LEV - D - VORTAC - S-201 | REV.

PLOT DATE/TIME: 9/11/2025 9:49:41 AM

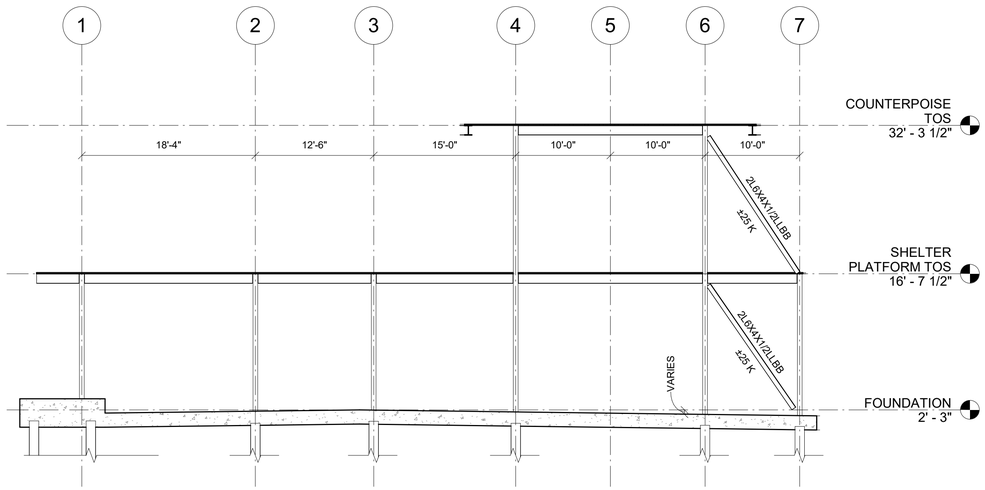

F8 ELEVATION GRID A
1/8" = 1'-0"

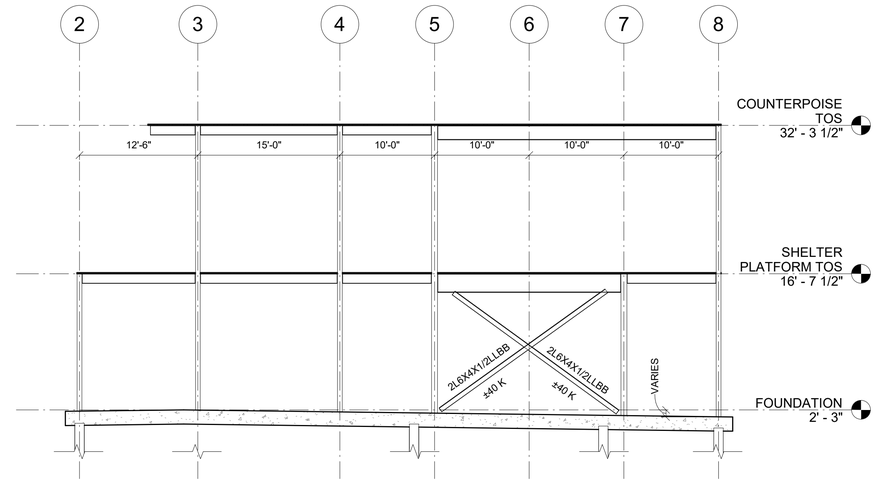

F5 ELEVATION GRID B
1/8" = 1'-0"

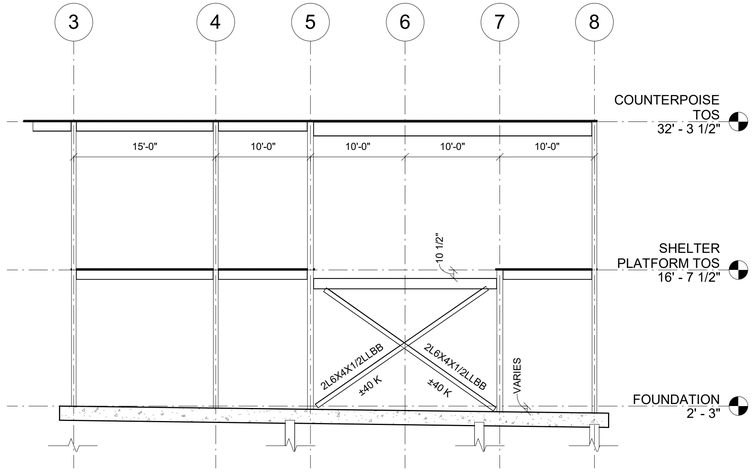

C8 ELEVATION GRID C
1/8" = 1'-0"

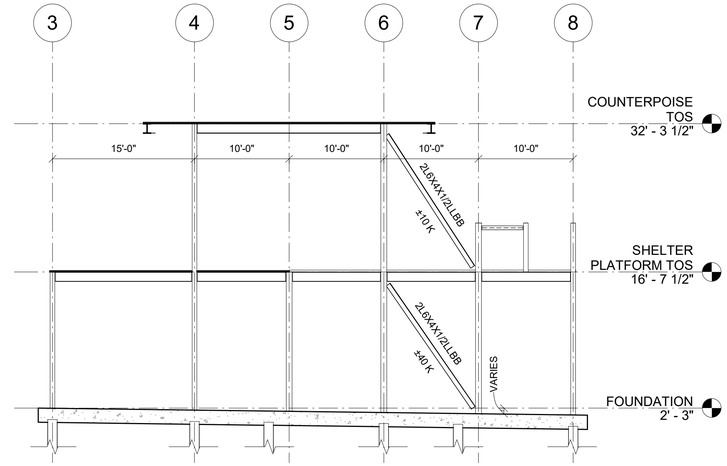

C5 ELEVATION GRID D
1/8" = 1'-0"

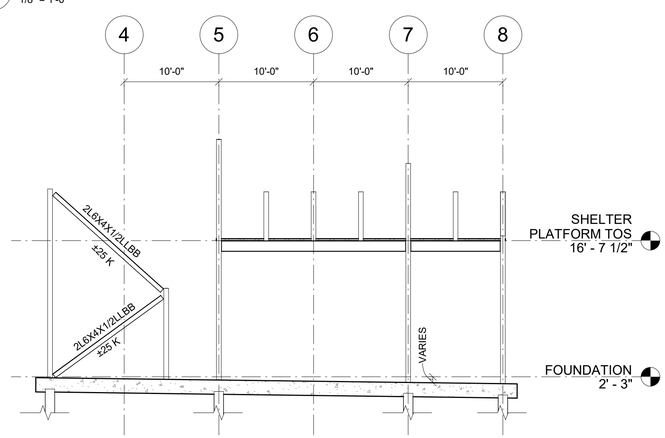

A8 ELEVATION GRID E
1/8" = 1'-0"

8 0 8 16
Scale: 1/8 INCH = 1 FOOT

FOR OFFICIAL USE ONLY
PUBLIC AVAILABILITY TO BE DETERMINED UNDER 5 USC 552

JACOBS
1100 N GLEBE RD.
SUITE 500
ARLINGTON, VA 22201

REV.	APPROVED DATE	DESCRIPTION	JCN	REDLINE DATE	APVD

ALABAMA LICENSED No. 39605 PROFESSIONAL ENGINEER 12 Sept 2025 MARK CLYDE KANONIK

Jacobs

DEPARTMENT OF TRANSPORTATION
FEDERAL AVIATION ADMINISTRATION
CENTRAL SERVICE REGION — FT WORTH, TX

LEEVILLE (LEV) VORTAC REPLACEMENT

BRACING ELEVATIONS

GRAND ISLE — LEEVILLE (LEV) VORTAC — LA

REVIEWED BY | SUBMITTED BY | APPROVED BY
SUBMITTER'S TITLE | APPROVER'S TITLE

LEEVILLE VORTAC
GRAND ISLE, LOUISIANA

DESIGNED BY DG
DRAWN BY DG
CHECKED BY MK

ISSUED BY: ENGINEERING SERVICES TERMINAL

DATE 9/12/2025 JCN: 1508914
DRAWING NO. LEV - D - VORTAC - S-202
REV.

PLOT DATE/TIME: 9/11/2025 9:49:41 AM

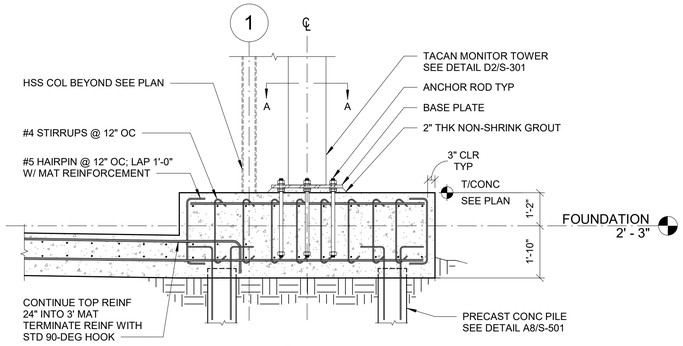

SECTION

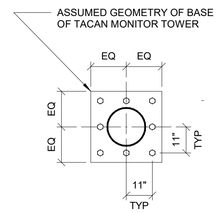

SECTION A-A

ASSUMED TACAN MONITOR TOWER BASE PLATE
MIN SIZE: 1-1/2" X 2'-6" X 2'-6"
MIN ANCHORAGE: (8) 1-1/2" WITH 2'-1" EMBED ANCHOR RODS

F8 TACAN MONITOR TOWER FOUNDATION DETAIL
3/8" = 1'-0"

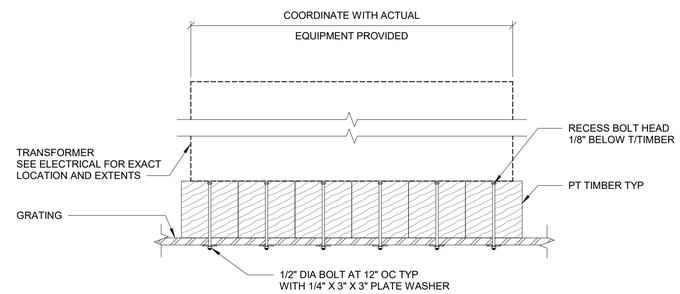

F5 TRANSFORMER SUPPORT
NTS

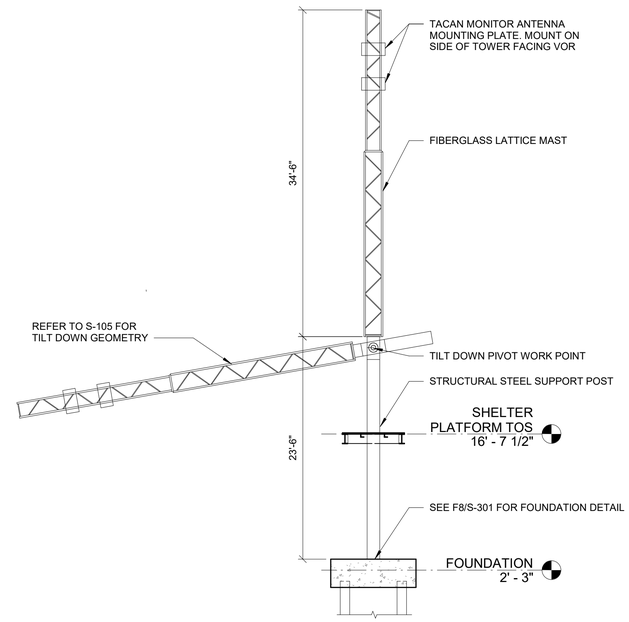

D2 COUNTER WEIGHTED TACAN MONITOR TOWER
1/8" = 1'-0"

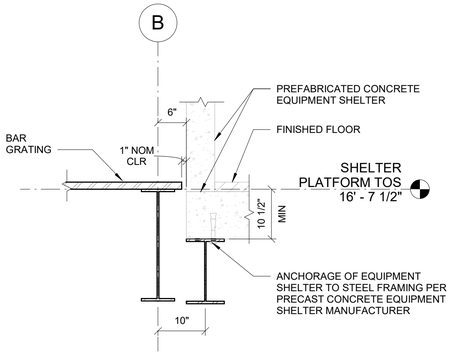

D8 EQUIPMENT SHELTER FRAMING
3/4" = 1'-0"

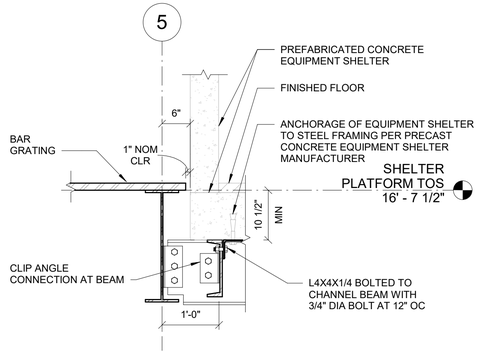

D7 EQUIPMENT SHELTER FRAMING
3/4" = 1'-0"

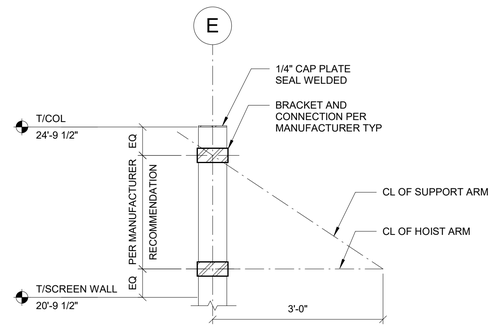

D5 HOIST SUPPORT DETAIL
3/4" = 1'-0"

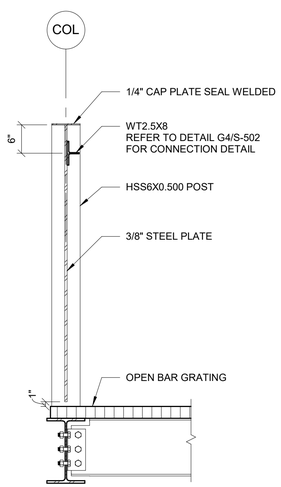

A8 TANK ENCLOSURE AT POST
3/4" = 1'-0"

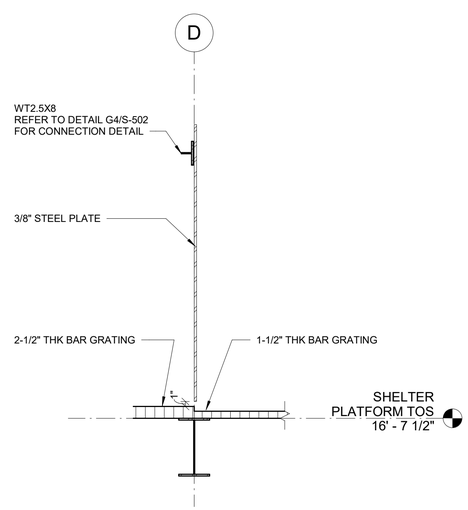

A7 TANK ENCLOSURE AT GRATING STEP
3/4" = 1'-0"

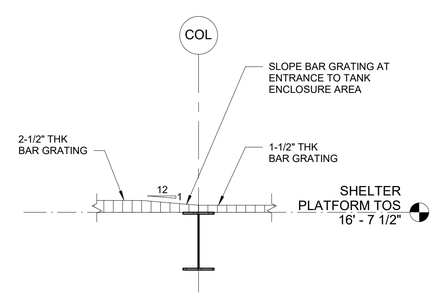

A5 TANK ENCLOSURE GRATING SLOPE
3/4" = 1'-0"

8 0 8 16
Scale: 1/8 INCH = 1 FOOT
2 0 2 4 6
Scale: 3/8 INCH = 1 FOOT
1 0 1 2 3
Scale: 3/4 INCH = 1 FOOT

FOR OFFICIAL USE ONLY
PUBLIC AVAILABILITY TO BE DETERMINED UNDER 5 USC 552

ALABAMA LICENSED No. 39605 PROFESSIONAL ENGINEER 12 Sept 2025 MARK CLYDE KANONIK

JACOBS
1100 N GLEBE RD.
SUITE 500
ARLINGTON, VA 22201

REV.	APPROVED DATE	DESCRIPTION	JCN	REDLINE DATE	APVD

Jacobs

DEPARTMENT OF TRANSPORTATION
FEDERAL AVIATION ADMINISTRATION
CENTRAL SERVICE REGION — FT WORTH, TX

LEEVILLE (LEV) VORTAC REPLACEMENT

BUILDING SECTIONS

GRAND ISLE — LEEVILLE (LEV) VORTAC — LA

REVIEWED BY | SUBMITTED BY | APPROVED BY
SUBMITTER'S TITLE | APPROVER'S TITLE

LEEVILLE VORTAC
GRAND ISLE, LOUISIANA

DESIGNED BY DG
DRAWN BY DG
CHECKED BY MK

ISSUED BY: ENGINEERING SERVICES TERMINAL

DATE 9/12/2025 JCN: 1508914
DRAWING NO. LEV - D - VORTAC - S-301
REV.

PLOT DATE/TIME: 9/11/2025 9:49:42 AM

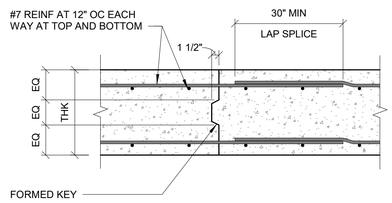

G8 CONCRETE SLAB CONSTRUCTION JOINT
NTS

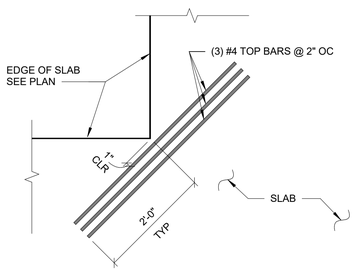

E8 SLAB RE-ENTRANT CORNER REINFORCING
NTS

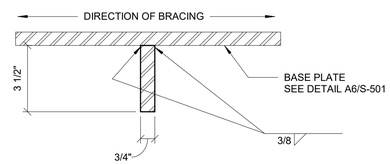

E6 BASE PLATE SHEAR LUG DETAIL
NTS

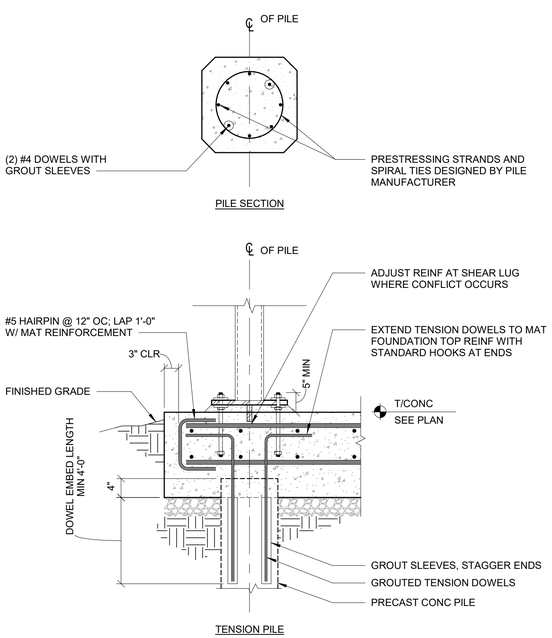

A8 MAT FOUNDATION DETAIL
3/4" = 1'-0"

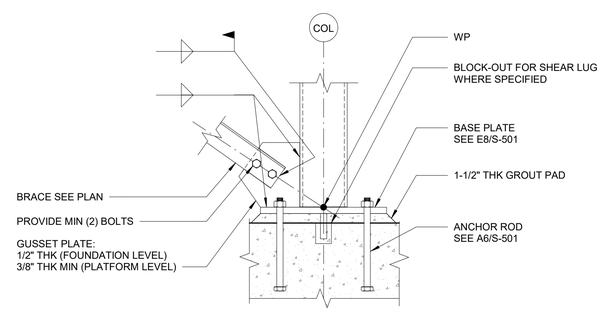

C6 BASE PLATE AND BRACE CONNECTION AT BASE DETAIL
NTS

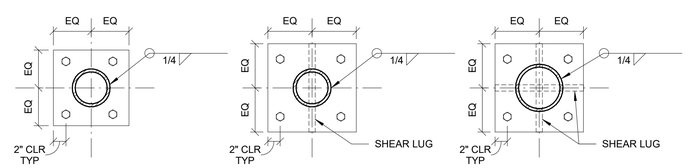

BP01
HSS6 COLUMN
3/4" X 12" X 12" BASE PLATE
(4) 1" DIA WITH 1'-0" EMBED
ANCHOR RODS

BP02
HSS6 COLUMN
1" X 1'-0" X 1'-0" BASE PLATE
(4) 1" DIA WITH 1'-0" EMBED
ANCHOR RODS

BP03
HSS7.5 COLUMN
1" X 1'-2" X 1'-2" BASE PLATE
(4) 1" DIA WITH 1'-2" EMBED
ANCHOR RODS

A6 BASE PLATE TYPES
1" = 1'-0"

1 0 1 2 3
Scale: 3/4 INCH = 1 FOOT

1 0 1 2
Scale: 1 INCH = 1 FOOT

FOR OFFICIAL USE ONLY
PUBLIC AVAILABILITY TO BE DETERMINED UNDER 5 USC 552

ALABAMA LICENSED
No. 39605
PROFESSIONAL ENGINEER
12 Sept 2025
MARK CLYDE KANONIK

JACOBS
1100 N GLEBE RD.
SUITE 500
ARLINGTON, VA 22201

REV.	APPROVED DATE	DESCRIPTION	JCN	REDLINE DATE	APVD

Jacobs

DEPARTMENT OF TRANSPORTATION
FEDERAL AVIATION ADMINISTRATION
CENTRAL SERVICE REGION — FT WORTH, TX

LEEVILLE (LEV) VORTAC REPLACEMENT

FOUNDATION DETAILS

GRAND ISLE — LEEVILLE (LEV) VORTAC — LA

REVIEWED BY | SUBMITTED BY | APPROVED BY
SUBMITTER'S TITLE | APPROVER'S TITLE

LEEVILLE VORTAC
GRAND ISLE, LOUISIANA

DESIGNED BY DG
DRAWN BY DG
CHECKED BY MK

ISSUED BY: ENGINEERING SERVICES TERMINAL

DATE 9/12/2025 | JCN: 1508914
DRAWING NO. LEV - D - VORTAC - S-501 | REV.

PLOT DATE/TIME: 9/11/2025 9:49:43 AM

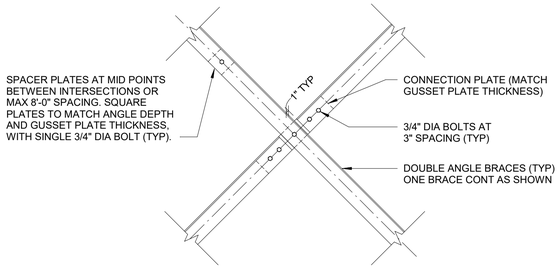

G8 VERTICAL BRACE INTERSECTION
NTS

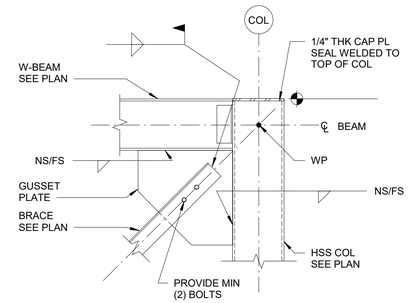

G6 VERTICAL BRACE AT BEAM
NTS

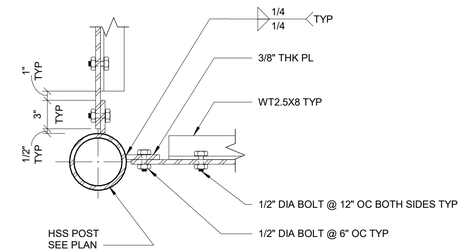

G4 TANK ENCLOSURE POST CONNECTION
NTS

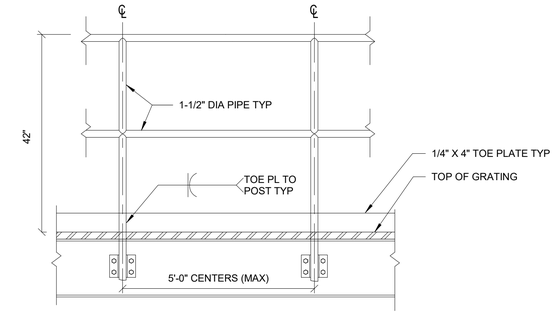

G3 GUARDRAIL DETAIL
NTS

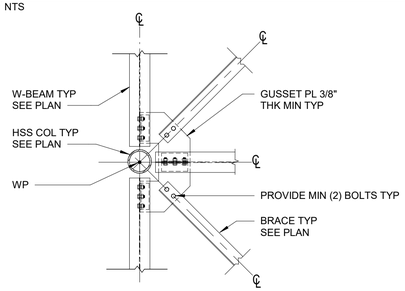

PLAN (VIEWED FROM BELOW)

E8 HORIZONTAL BRACE CONNECTION AT COLUMN
NTS

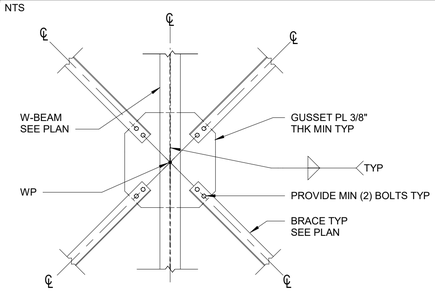

PLAN (VIEWED FROM BELOW)

E6 HORIZONTAL BRACE CONNECTION AT BEAM
NTS

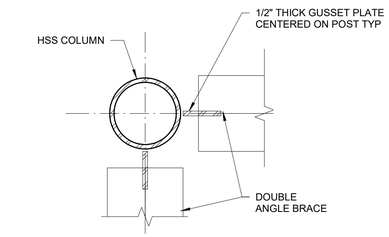

E4 VERTICAL BRACE TO HSS COLUMN CONNECTION
NTS

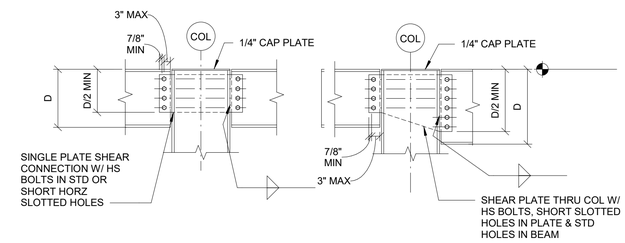

NOTE: SEE STRUCTURAL STEEL NOTES FOR FACTORED DESIGN REACTIONS

E3 GIRDER TO HSS COLUMN SHEAR CONNECTION
NTS

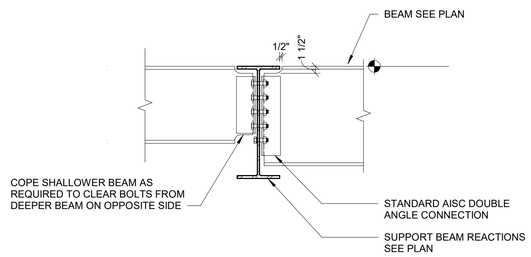

NOTE: SELECT CONNECTIONS TO RESIST THE FACTORED REACTIONS INDICATED. IF THE REACTION IS NOT SHOWN, CONNECTION SHALL SUPPORT 10K VERTICAL

C8 SHEAR CONNECTION BEAM TO BEAM
NTS

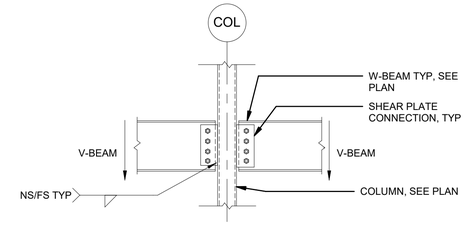

NOTES:

1. PROVIDE SHEAR CONNECTION WITH FACTORED SHEAR CAPACITY (V-BEAM) SHOWN IN BEAM CONN DESIGN FORCES SCHEDULE, UON ON PLANS.
2. ALTERNATIVE CONNECTION MAY BE USED IN LIEU OF CONNECTION SHOWN WITH SUPPORTING CALCULATIONS.

C6 SHEAR CONNECTION TO HSS COLUMN
NTS

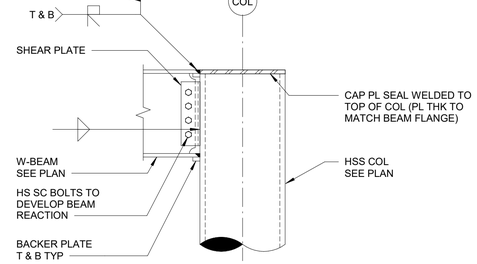

TOP OF COLUMN

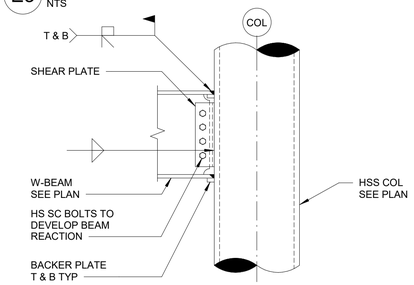

MID-HEIGHT OF COLUMN

C4 GIRDER TO HSS MOMENT CONNECTION
NTS

1 0 1 2 3
Scale: 3/4 INCH = 1 FOOT

2 0 2 4
Scale: 1/2 INCH = 1 FOOT

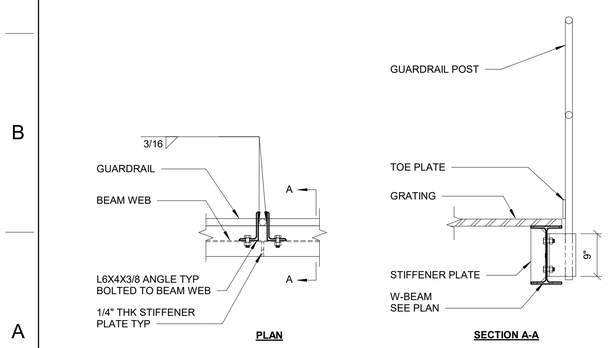

PLAN **SECTION A-A**

A8 RAILING TO BEAM CONNECTION
3/4" = 1'-0"

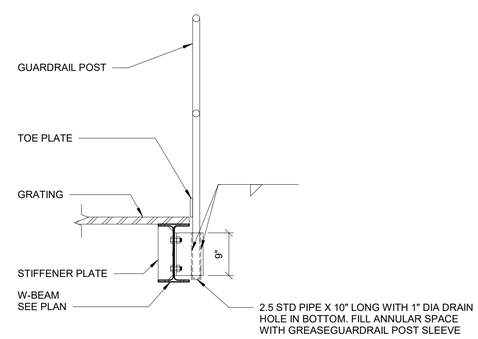

A6 REMOVABLE GUARDRAIL DETAIL
NTS

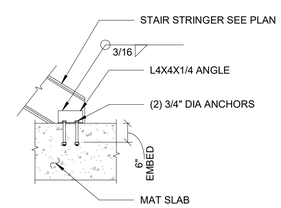

A4 STAIR SUPPORT DETAIL AT SLAB
1/2" = 1'-0"

FOR OFFICIAL USE ONLY
PUBLIC AVAILABILITY TO BE DETERMINED UNDER 5 USC 552

ALABAMA LICENSED No. 39605 PROFESSIONAL ENGINEER 12 Sept 2025 MARK CLYDE KANOWITZ

JACOBS
1100 N GLEBE RD.
SUITE 500
ARLINGTON, VA 22201

REV.	APPROVED DATE	DESCRIPTION	JCN	REDLINE DATE	APVD

Jacobs

DEPARTMENT OF TRANSPORTATION
FEDERAL AVIATION ADMINISTRATION
CENTRAL SERVICE REGION — FT WORTH, TX

LEEVILLE (LEV) VORTAC REPLACEMENT

STEEL DETAILS

GRAND ISLE — LEEVILLE (LEV) VORTAC — LA

REVIEWED BY | SUBMITTED BY | APPROVED BY
SUBMITTER'S TITLE | APPROVER'S TITLE

LEEVILLE VORTAC
GRAND ISLE, LOUISIANA

DESIGNED BY DG
DRAWN BY DG
CHECKED BY MK
ISSUED BY: ENGINEERING SERVICES TERMINAL
DATE 9/12/2025 JCN: 1508914
DRAWING NO. LEV - D - VORTAC - S-502 REV.

PLOT DATE/TIME: 9/11/2025 9:49:45 AM

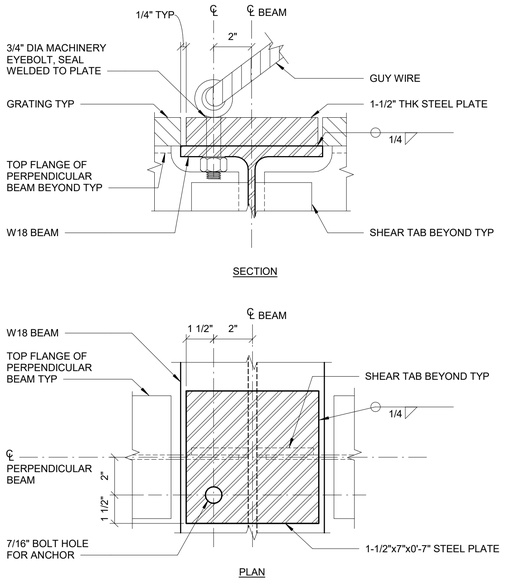

NOTES:
1. DETAIL APPLIES AT COUNTERPOISE COLUMNS B6 AND C6.
2. GRATING NOT SHOWN IN PLAN DETAIL FOR CLARITY.

E8 ANCHOR FOR ANTENNA CONE GUYS AT BEAMS
3" = 1'-0"

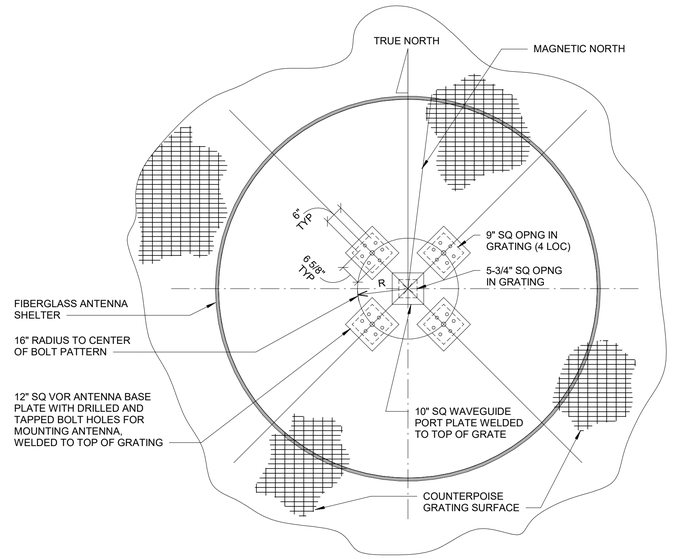

E7 ANTENNA SHELTER ROOF PLATE ORIENTATION
1/2" = 1'-0"

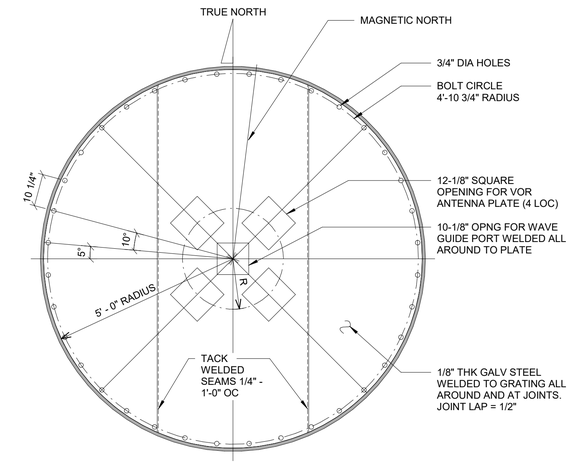

E4 ANTENNA SHELTER FLOOR
1/2" = 1'-0"

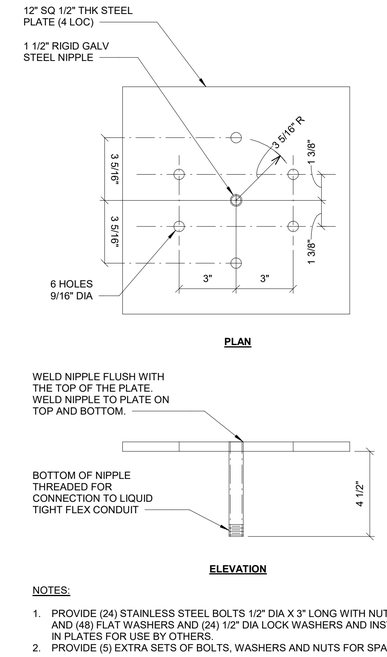

NOTES:
1. PROVIDE (24) STAINLESS STEEL BOLTS 1/2" DIA X 3" LONG WITH NUTS AND (48) FLAT WASHERS AND (24) 1/2" DIA LOCK WASHERS AND INSTALL IN PLATES FOR USE BY OTHERS.
2. PROVIDE (5) EXTRA SETS OF BOLTS, WASHERS AND NUTS FOR SPARES.

E2 CONE ANTENNA MOUNT PLATE
3" = 1'-0"

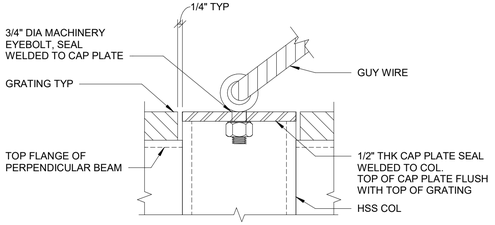

NOTE: DETAIL APPLIES AT COUNTERPOISE COLUMNS B4 AND C4.

C8 ANCHOR FOR ANTENNA CONE GUYS AT COLUMNS
3" = 1'-0"

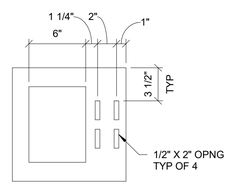

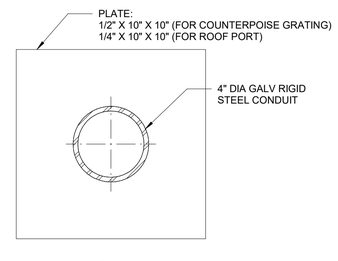

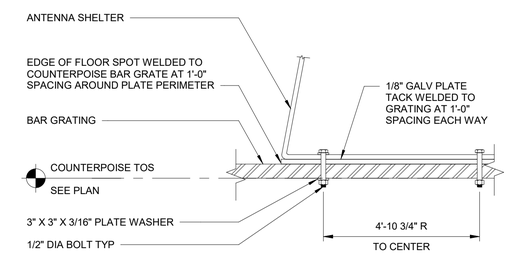

C2 ANTENNA SHELTER ANCHORAGE
1 1/2" = 1'-0"

0 4" 8" 12"
Scale: 3 INCH = 1 FOOT
1 0 1
Scale: 1 1/2 INCH = 1 FOOT
2 0 2 4
Scale: 1/2 INCH = 1 FOOT

FOR OFFICIAL USE ONLY
PUBLIC AVAILABILITY TO BE DETERMINED UNDER 5 USC 552

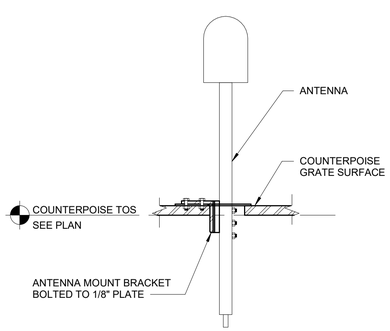

A8 ELEVATION VOR MONITOR ANTENNA
NTS

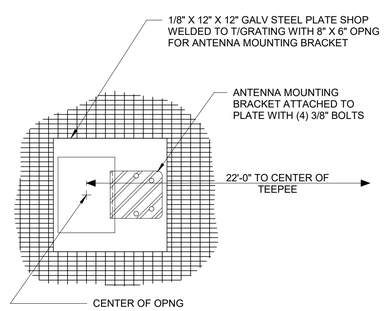

NOTE: SEE S105 FOR LOCATIONS AND ORIENTATIONS OF ANTENNAS

A7 MONITOR ANTENNA OPENING PLAN
NTS

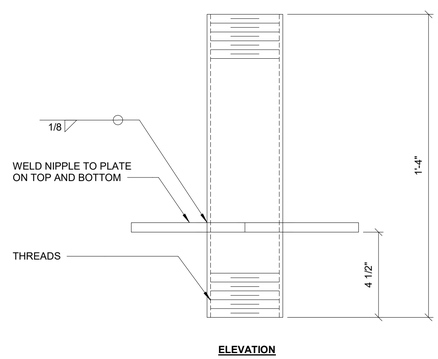

A5 CONE ANTENNA MOUNT PLATE ON WAVEGUIDE PORT
3" = 1'-0"

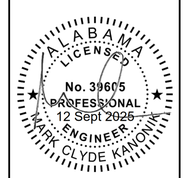

JACOBS
1100 N GLEBE RD.
SUITE 500
ARLINGTON, VA 22201

REV.	APPROVED DATE	DESCRIPTION	JCN	REDLINE DATE	APVD

Jacobs

DEPARTMENT OF TRANSPORTATION
FEDERAL AVIATION ADMINISTRATION
CENTRAL SERVICE REGION — FT WORTH, TX

LEEVILLE (LEV) VORTAC REPLACEMENT

EQUIPMENT SUPPORT DETAILS

GRAND ISLE — LEEVILLE (LEV) VORTAC — LA

REVIEWED BY	SUBMITTED BY	APPROVED BY
	SUBMITTER'S TITLE	APPROVER'S TITLE

LEEVILLE VORTAC
GRAND ISLE, LOUISIANA

DESIGNED BY	DG	ISSUED BY: ENGINEERING SERVICES TERMINAL	DATE 9/12/2025 — JCN: 1508914
DRAWN BY	DG		DRAWING NO. LEV - D - VORTAC - S-541 — REV.
CHECKED BY	MK		

PLOT DATE/TIME: 9/11/2025 9:49:46 AM

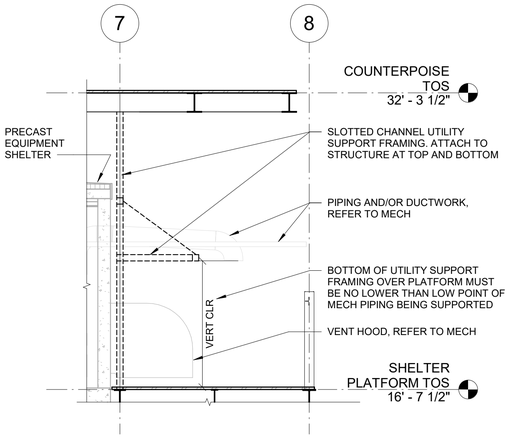

E8 UTILITY SUPPORT FRAME SECTION
1/4" = 1'-0"

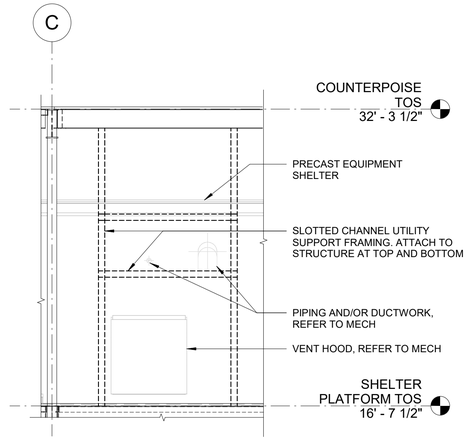

E7 UTILITY SUPPORT FRAME ELEVATION
1/4" = 1'-0"

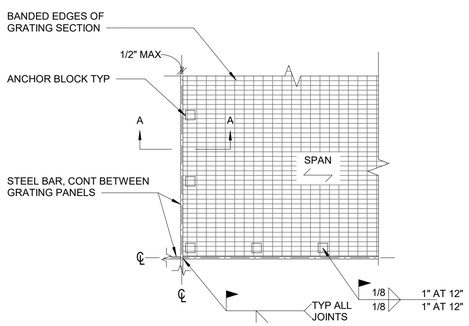

PLAN

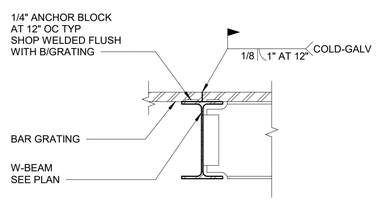

SECTION A-A

NOTES:

1. GRATING FABRICATED WITH ANCHOR BLOCKS AT 6" OC ALONG EDGES AND AT SUPPORTS, WITH 5/16" HOLES FOR WELDING TO SUPPORTS.
2. CONNECTION DETAIL APPLIES AT ALL JOINTS BETWEEN GRATING SECTIONS OF COUNTERPOISE PLATFORM

C8 CONTINUITY PLATE JOINTS
NTS

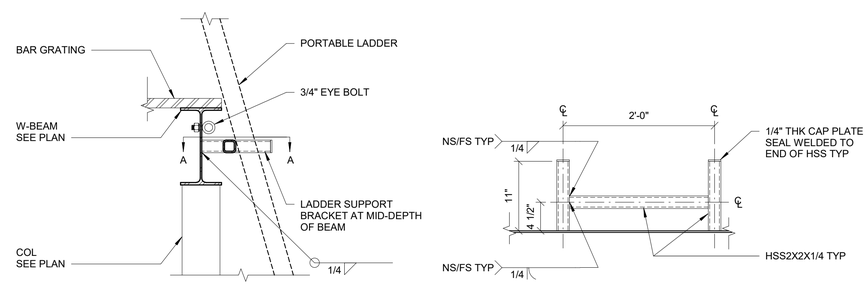

SECTION **A-A**

C5 LADDER SUPPORT BRACKET
NTS

BAR GRATING SCHEDULE							
MARK	TYPE[1]	BEARING BAR SPACING OC (IN)	CROSS BAR SPACING OC (IN)	BEARING BAR DEPTH X WIDTH (IN)	MATERIAL	FINISH	REMARKS
BG1.5	WELDED	1 3/16	4	1 1/2 X 3/16	STEEL	GALVANIZED	-
BG2.5	WELDED	1 3/16	4	2 1/2 X 3/16	STEEL	GALVANIZED	-

NOTE: GALVANIZED FINISH SHALL BE HOT-DIPPED WITH A COATING WEIGHT OF NOT LESS THAN 1.8 OUNCES PER SQUARE FOOT.

A8 BAR GRATING SCHEDULE
NTS

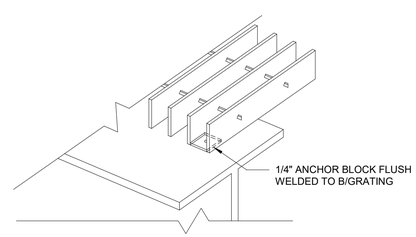

A5 ANCHOR BLOCK
NTS

FOR OFFICIAL USE ONLY
PUBLIC AVAILABILITY TO BE DETERMINED UNDER 5 USC 552

ALABAMA LICENSED No. 39605 PROFESSIONAL ENGINEER 12 Sept 2025 MARK CLYDE KAINONIK

JACOBS
1100 N GLEBE RD.
SUIT 500
ARLINGTON, VA 22201

REV.	APPROVED DATE	DESCRIPTION	JCN	REDLINE DATE	APVD

DEPARTMENT OF TRANSPORTATION
FEDERAL AVIATION ADMINISTRATION
CENTRAL SERVICE REGION FT WORTH, TX

LEEVILLE (LEV) VORTAC REPLACEMENT

STRUCTURAL DETAILS

GRAND ISLE LEEVILLE (LEV) VORTAC LA

REVIEWED BY | SUBMITTED BY | APPROVED BY
SUBMITTER'S TITLE | APPROVER'S TITLE
DESIGNED BY DG | DRAWN BY DG | CHECKED BY MK
ISSUED BY: ENGINEERING SERVICES TERMINAL
DATE 9/12/2025 | JCN: 1508914
DRAWING NO. LEV - D - VORTAC - S-551 | REV.

LEEVILLE VORTAC
GRAND ISLE, LOUISIANA

PLOT DATE/TIME: 9/11/2025 9:49:46 AM

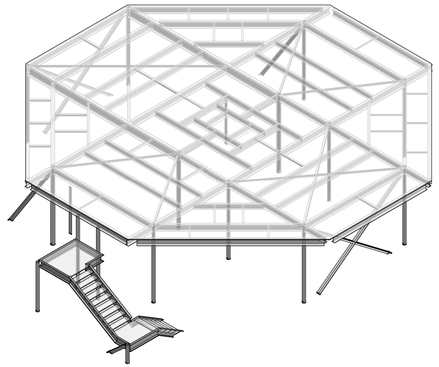

F8 COUNTERPOISE LEVEL SOUTHWEST ORTHOGRAPHIC VIEW

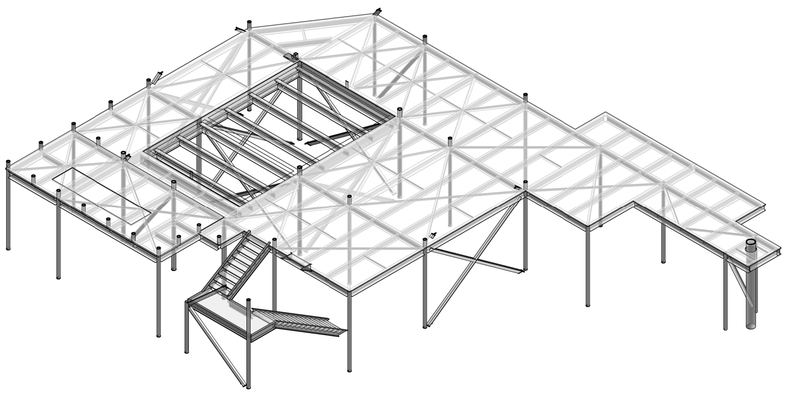

D8 PLATFORM LEVEL SOUTHWEST ORTHOGRAPHIC VIEW

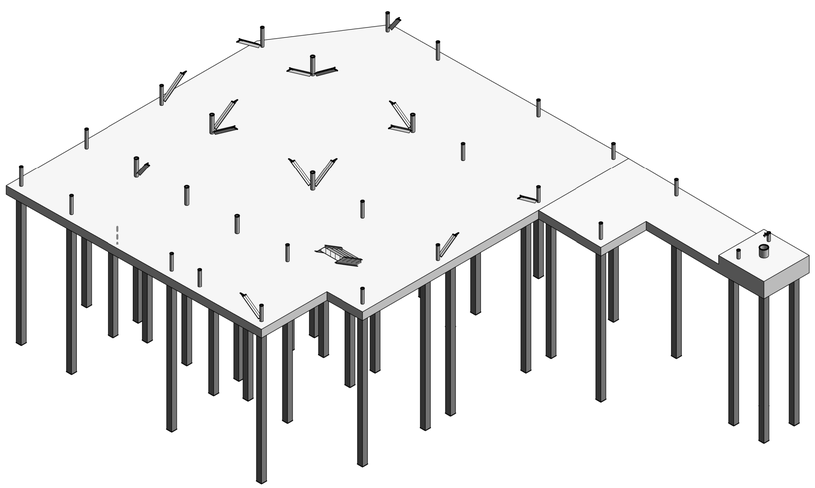

A8 FOUNDATION LEVEL SOUTHWEST ORTHOGRAPHIC VIEW

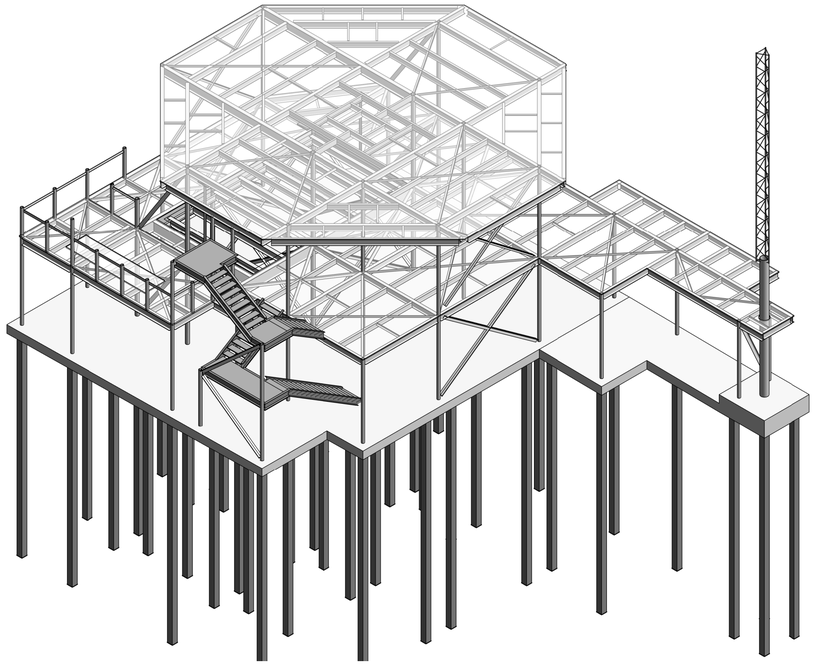

D4 COMPLETE STRUCTURE SOUTHWEST ORTHOGRAPHIC VIEW

NOTE: ISOMETRIC VIEWS ARE PROVIDED FOR REFERENCE ONLY AND MUST NOT BE USED FOR CONSTRUCTION.

FOR OFFICIAL USE ONLY
PUBLIC AVAILABILITY TO BE DETERMINED UNDER 5 USC 552

JACOBS
1100 N GLEBE RD.
SUITE 500
ARLINGTON, VA 22201

REV.	APPROVED DATE	DESCRIPTION	JCN	REDLINE DATE	APVD

ALABAMA LICENSED No. 39605 PROFESSIONAL ENGINEER 12 Sept 2025 MARK CLYDE KANONIK

Jacobs

DEPARTMENT OF TRANSPORTATION
FEDERAL AVIATION ADMINISTRATION
CENTRAL SERVICE REGION — FT WORTH, TX

LEEVILLE (LEV) VORTAC REPLACEMENT

3D VIEWS

GRAND ISLE — LEEVILLE (LEV) VORTAC — LA

REVIEWED BY	SUBMITTED BY	APPROVED BY
	SUBMITTER'S TITLE	APPROVER'S TITLE

LEEVILLE VORTAC
GRAND ISLE, LOUISIANA

DESIGNED BY	DG	ISSUED BY: ENGINEERING SERVICES TERMINAL	DATE 9/12/2025 — JCN: 1508914
DRAWN BY	DG		DRAWING NO.: LEV - D - VORTAC - S-901 — REV.
CHECKED BY	MK		

PLOT DATE/TIME: 9/11/2025 9:49:48 AM

HVAC LEGEND

EQUIPMENT

AHU 200 — EQUIPMENT DESIGNATION NUMBER

MISCELLANEOUS

- POINT OF CONNECTION OF NEW TO EXISTING
- POINT OF TERMINATION
- NEW WORK - DARK LINE WEIGHT
- EXISTING - LIGHT LINE WEIGHT
- TO BE DEMOLISHED

SINGLE LINE DUCTWORK

- F — FILTER
- C C — COOLING COIL
- H C — HEATING COIL
- LOUVER
- M — MOTORIZED PARALLEL BLADE DAMPER
- BACKDRAFT DAMPER
- M — MOTORIZED OPPOSED BLADE DAMPER
- E — ELECTRIC HEATING COIL
- FIRE/SMOKE DAMPER
- AFMS SPMS — AIR FLOW MEASURING STATION/STATIC PRESSURE MEASURING STATION
- HUMID — HUMIDIFIER
- UNIT HEATER
- FAN
- FAN WITH VARIABLE FREQ. MOTOR CONTROLLER
- RECTANGULAR TO ROUND TRANSITION
- SQUARE REDUCER/ INCREASER
- FLEXIBLE DUCT
- T — THERMOSTAT
- GD — GAS DETECTOR
- RLD — REFRIGERANT LEAK DETECTOR

DOUBLE LINE DUCTWORK

- AXB — RECTANGULAR DUCT ("WIDTH"X"HEIGHT")
- 20"∅ — ROUND DUCT (DIAMETER)
- LINED DUCT
- FLEXIBLE DUCT
- FLEXIBLE CONNECTION
- MANUAL DAMPER
- M A OBD BBD — MOTORIZED, AUTOMATIC, OPPOSED BLADE DAMPER, BACKDRAFT DAMPER
- EXISTING FIRE DAMPER, SMOKE DAMPER
- FD SD — FIRE DAMPER, SMOKE DAMPER
- FSD — COMBINATION FIRE/SMOKE DAMPER
- FD/FSD/SD — HORIZONTAL DAMPER IN DUCT RISER, REFER TO TAILS FOR TYPE
- TURNING VANES
- HIDDEN DUCTWORK
- AxB SA UP OR DN — SUPPLY DUCT PHYSICAL RISER UP (INDICATED BY FILL)
- AxB SA UP OR DN — SUPPLY DUCT PHYSICAL RISER DN (INDICATED BY DASHED LINES)
- AxB RA UP OR DN — RETURN DUCT PHYSICAL RISER UP (INDICATED BY FILL)
- AxB RA UP OR DN — RETURN DUCT PHYSICAL RISER DN (INDICATED BY DASHED LINES)
- AxB EA UP OR DN — EXHAUST DUCT PHYSICAL RISER UP (INDICATED BY FILL)
- AxB EA UP OR DN — EXHAUST DUCT PHYSICAL RISER DN (INDICATED BY DASHED LINES)
- S-X 200 — DIFFUSER, GRILLE, OR REGISTER DESIGNATION; AIR FLOW RATE (CFM)
- PRG — CEILING PLENUM RETURN GRILLE, UNLESS OTHERWISE NOTED
- EXHAUST GRILLE
- SIZE CFM — OUTSIDE AIR INTAKE
- DOOR LOUVER
- U — UNDERCUT DOOR
- R — DUCT RISE
- D — DUCT DROP
- AP — ACCESS PANEL
- TRANSITION-RECTANGULAR TO ROUND
- SPD — STATIC PRESSURE DAMPER

PIPING

- SIZE (IN)
- DHW — DOMESTIC HOT WATER
- DCW — DOMESTIC COLD WATER
- CD — CONDENSATE DRAIN
- D — DRAIN
- LPG — LIQUID PROPANE GAS
- RS/RL — REFRIGERANT SUCTION / REFRIGERANT LIQUID

PIPING (CONT.)

SYMBOL	ABBREVIATION	DESCRIPTION
		DIRECTION OF PITCH
		FLUID FLOW DIRECTION
		PIPE TURNING UP
		PIPE TURNING DOWN
		CONCENTRIC REDUCER
		ECCENTRIC REDUCER
		CAPPED PIPE/OUTLET
		PLUGGED PIPE/OUTLET
		WELD CAP
		PIPE HEADER WITH BLIND FLANGE
		HOT TAP/STOPPLE FITTING
	BV	BALL VALVE
M		
	FCV	FLOW CONTROL VALVE
		SHUT-OFF VALVE
	AV	ANGLE VALVE
	GLV	GLOBE VALVE
	CV	CHECK VALVE
	BFV	BUTTERFLY VALVE
M		
	FCV	FLOW CONTROL VALVE
	GC	GAS COCK
	PV	PLUG VALVE
		TEST COCK
		PETE'S PLUG
	U	UNION
		FLEXIBLE HOSE (FLANGED ENDS)
		FLEXIBLE HOSE (SCREWED ENDS)
		FLEXIBLE PIPE CONNECTOR
		AIR ELIMINATOR
	AV	MANUAL AIR VENT
	AAV	AUTOMATIC AIR VENT
		WATER METER
		FLOW METER
		STRAP-ON SENSOR
S		SOLENOID VALVE
M		MOTOR OPERATED 2-WAY CONTROL VALVE
M		MOTOR OPERATED 3-WAY CONTROL VALVE
		STRAINER WITH BLOWDOWN VALVE
		TEST AND BALANCE VALVE
		PRESSURE REGULATING VALVE
	P/TRV	PRESSURE/TEMPERATURE RELIEF/SAFETY VALVE
		EXCESS FLOW VALVE
		EARTHQUAKE VALVE
	PI	PRESSURE GAUGE
	TI	THERMOMETER
ASSV		AUTOMATIC SAFETY SHUTOFF VALVE (ASSV)

ABBREVIATIONS

A	AMPERES
ABV	ABOVE
AD	ACCESS DOOR
AAV	AUTOMATIC AIR VENT
AC	AIR CONDITIONING
ACGIH	AMERICAN CONFERENCE OF GOVERNMENTAL INDUSTRIAL HYGIENISTS
ACT	ACCOUSTICAL TILE, ACTUAL
ACM	ASBESTOS CONTAINING MATERIAL
AD	ACCESS DOOR
ADA	AMERICANS WITH DISABILITIES
ADD	ADDENDUM, ADDITION
ADDL	ADDITIONAL
ADH	ADHESIVE
ADJ	ADJACENT
AF	AIR FOIL
AFF/G	ABOVE FINISHED FLOOR/GRADE
AGG	AGGREGATE
AHU	AIR HANDLING UNIT
AIA	AMERICAN INSTITUTE OF ARCHITECTS
ALT	ALTERNATE, ALTITUDE
AMB	AMBIENT
AMP	AMPERE
ANCH	ANCHOR
AP	ACCESS PANEL
APD	AIR PRESSURE DROP
APPROX	APPROMIXATE, APPROXIMATELY
ARCH	ARCHITECT
AV	MANUAL AIR VENT
AVG	AVERAGE
B	BOILER
BAS	BUILDING AUTOMATION SYSTEM
BEL	BELOW
BDD	BACK DRAFT DAMPER
BF	BLIND FLANGE, BUTTERFLY VALVE
BFP	BACK FLOW PREVENTER
BHP	BRAKE HORSEPOWER
BM	BEAM
BOD	BOTTOM OF DUCT, BASIS OF DESIGN
BOT	BOTTOM
BT	BOTTOM THROAT, BUFFER TANK
BTU	BRITISH THERMAL UNIT
BTUH	BTU PER HOUR
CAP	CAPACITY
CAV	CONSTANT AIR VOLUME
CC	COOLING COIL
CD	CEILING DIFFUSER, CONTROL DAMPER
CFM	CUBIC FEET PER MINUTE
CFR	CODE OF FEDERAL REGULATIONS
CLG	CEILING
COND	CONDENSATE
CONN	CONNECTION
CONT	CONTINUATION
COR	CONTRACTING OFFICER'S REPRESNTATIVE
CP	CONTROL PANEL
CU	CONDENSING UNIT
CV	CONSTANT VOLUME, CONTROL VALVE
CW	COLD WATER
D	DROP, DRAIN
DAT	DISCHARGE AIR TEMPERATURE
DB	DRY BULB
DCW	DOMESTIC COLD WATER
DDCS	DIRECT DIGITAL CONTROL SYSTEM
DEG	DEGREE
DEGF	DEGREES FAHREINHEIT
DEMO	DEMOLITION
DHW	DOMESTIC HOT WATER
DIAM, DIA	DIAMETER
DN	DOWN
DP	DIFFERENTIAL PRESSURE
DSS	DUCTLESS SPLIT SYSTEM AIR HANDLER
DWG	DRAWING
E, (E), EX	EXISTING
EA	EXHAUST AIR
EAT	ENTERING AIR TEMPERATURE
EDB	ENTERING DRY BULB TEMPERATURE
EER	ENERGY EFFICIENCY RATIO
EF	EXHAUST FAN
EFF	EFFICIENCY
EG	EXHAUST GRILLE
E/G	ENGINE GENERATOR
EH	ELECTRIC HUMIDIFIER, ELECTRIC HEATER
EL	EXHAUST LOUVER
ELEC	ELECTRIC, ELECTRICAL
ELEV	ELEVATION
ENT	ENTERING
EQUIP	EQUIPMENT
ESP	EXTERNAL STATIC PRESSURE
ET	EXPANSION TANK
ETR	EXISTING TO REMAIN
EWB	ENTERING WET BULB
EWT	ENTERING WATER TEMPERATURE
EXH	EXHAUST
EXP	EXPANSION
F	FILTER
°F	DEGREES FAHREINHEIT
FA	FREE AREA (SQ.FT)
FC	FLEXIBLE CONNECTION
FD	FIRE DAMPER
FF	FINAL FILTER
FIN FL, FF	FINISHED FLOOR
FL	FLOOR
FLA	FULL LOAD AMPERES
FLEX	FLEXIBLE
FLR	FLOOR
FPM	FEET PER MINUTE
FPS	FEET PER SECOND
FRP	FIBERGLASS REINFORCED PIPE
FSD, FD/SD	COMBINATION FIRE AND SMOKE DAMPER
FT	FEET
FT H20	FEET OF WATER
FV	FACE VELOCITY
G, GA	GAUGE
GAL	GALLON
GALV'D	GALVANIZED
GEN	GENERATOR
GFECI	GOVERNMENT FURNISHED EQUIPMENT, CONTRACTOR INSTALLED
GPH	GALLONS PER HOUR
GPM	GALLONS PER MINUTE
GR	GRADE
GYP	GYPSUM
H, (H)	HEIGHT
HB	HOSE BIBB
HC	HEATING COIL
HD	HEAD
HP	HORSEPOWER, HEAT PUMP
HR	HOUR
HS	HAND SWITCH
HTG	HEATING
HTR	HEATER
HTP	HOT TAP/ STOPPLE FITTING
HU	HUMIDIFIER
HWC	HOT WATER COIL
HWP	HOT WATER PUMP
HV	HEATING AND VENTILATION
HZ	HERTZ
IL	INTAKE LOUVER
INS	INSULATION
IPLV	INTEGRATED PART LOAD VALUE
IPS	IRON PIPE SIZE
IN	INCH OR INCHES
IN WC	INCHES WATER COLUMN
IN WG	INCHES WATER GAUGE
KW	KILOWATT
L, (L)	LENGTH
LAT	LEAVING AIR TEMPERATURE
LBS	POUNDS
LBS/HR	POUNDS PER HOUR
LDB	LEAVING DRY BULB TEMPERATURE
LIN FT, LF	LINEAR FEET
LPS	LOW PRESSURE STEAM
LV	LOW VOLTAGE
LWB	LEAVING WET BULB TEMPERATURE
LWT	LEAVING WATER TEMPERATURE
MAX	MAXIMUM
MBH	THOUSAND BTU PER HOUR
MCA	MINIMUM CURRENT AMPACITY
MECH	MECHANICAL
MFS	MAXIMUM FUSE SIZE
MFR	MANUFACTURER
MIN	MINIMUM
MERV	MINIMUM EFFICIENCY REPORTING VALUE
MOCP	MAXIMUM OVERCURRENT PROTECTION
MOT, MTR	MOTOR
MTD	MOUNTED
NC	NORMALLY CLOSED, NOISE CRITERIA
NEC	NATIONAL ELECTRIC CODE
NIC	NOT IN CONTRACT
NL	NATURAL-VENTILATION LOUVER
NO	NORMALLY OPEN, NUMBER
NOM	NOMINAL
NPLV	NON-STANDARD PART LOAD VALUE
NPSH	NET POSITIVE SUCTION HEAD
NTS	NOT TO SCALE
OA	OUTSIDE AIR
OAL	OUTSIDE AIR LOUVER
OBD	OPPOSED BLADE DAMPER
OC	ON CENTER
OD	OUTSIDE DIAMETER, OPEN DRAIN
OED	OPEN END DUCT
OPNG	OPENING
OPP	OPPOSITE
PD	PRESSURE DROP
PERF	PERFORATED, PERFORMANCE
PERP	PERPENDICULAR
PF	PACKAGED FILTER, PREFILTER
PH	PHASE
PLUM	PLUMBING
PRV	PRESSURE REDUCING VALVE
PRESS.	PRESSURE
PSI	POUNDS PER SQUARE INCH
PSIG	PSI GAUGE
PSIA	PSI ABSOLUTE
PTAC	PACKAGED TERMINAL AIR CONDITIONER
PVC	POLYVINYL CHLORIDE
PWR	POWER
QUAL	QUALITY
QTY	QUANTITY
R	RISE
RA	RETURN AIR
RAC	ROOM AIR CONDITIONER
RAD	RADIATION, RADIANT HEATER
REM	REMOVE
REQ	REQUIRED
REQS	REQUIREMENTS
RG	RETURN GRILLE
RH	RELATIVE HUMIDITY
RL	RELIEF LOUVER
RPM	REVOLUTIONS PER MINUTE
SA	SUPPLY AIR, SOUND ATTENUATOR
SCOP	SEASONAL COEFFICIENT OF PERFORMANCE
SEN, SENS	SENSIBLE
SF	SUPPLY FAN
SD	SMOKE DETECTOR, SMOKE DAMPER
SP	STATIC PRESSURE
SPEC	SPECIFICATION
SR	SUPPLY REGISTER
SS	STAINLESS STEEL
T	THROAT
TA	TRANSFER AIR
TDH	TOTAL DYNAMIC HEAD
TEMP	TEMPERATURE
TS	TIGHT TO STRUCTURE
TSP	TOTAL STATIC PRESSURE
TSTAT	THERMOSTAT
TV	TURNING VANES
TYP	TYPICAL
UH	UNIT HEATER
UON	UNLESS OTHERWISE NOTED
V	VOLTS
VAC	VACUUM
VEL	VELOCITY
VFD	VARIABLE FREQUENCY DRIVE
VSD	VARIABLE SPEED DRIVE
W, (W)	WIDTH

ABBREVIATIONS CONTINUED

W/	WITH
W/O	WITHOUT
WB	WET BULB
WMS	WIRE MESH SCREN

GENERAL NOTES

A. NOT ALL ABBREVIATIONS, SYMBOLS, AND GENERAL NOTES SHOWN MAY BE USED ON THIS PROJECT.

B. FOR LOCATIONS AND SIZES OF WALL OPENINGS REFER TO ARCHITECTURAL DRAWINGS.

C. INSTALLATION MUST PROVIDE READY ACCESS TO VALVES, DAMPERS, COILS AIR FILTERS, AND OTHER DEVICES. ACCESS DOORS MUST BE INSTALLED TO PROVIDE ADEQUATE CLEARANCES FOR DIRECT ACCESS.

D. DESIGNATE A PERSON TO BE RESPONSIBLE FOR FIRE PROTECTION DURING WELDING AND CUTTING OPERATIONS. PERSON PERFORMING FIRE PROTECTION DUTIES MUST NOT BE SAME INDIVIDUAL THAT IS PERFORMING WELDING OPERATIONS. COMPLY WITH OSHA STANDARDS FOR WELDING IN 29 CFR-1910 AND 29 CFR-1926. PROVIDE TEMPORARY FIRE EXTINGUISHERS DURING CONSTRUCTION. WELDING MUST BE SCHEDULED IN WRITING WITH COR AND MUST BE PERFORMED OUTSIDE OF FACILITY OR IN SAFE LOCATION TO BE DETERMINED BY COR.

E. FOR WELDING THAT MUST BE PERFORMED INSIDE THE BUILDING, PROVIDE LOCAL MECHANICAL VENTILATION DURING WELDING DUCTED TO OUTSIDE, APPROVED BY FAA AND AMERICAN CONFERENCE OF GOVERMENTAL INDUSTRIAL HYGIENISTS (ACGIH). MINIMIZE WELDING WITHIN THE BUILDING WHEREVER POSSIBLE.

F. NO WELDING MUST BE POWERED FROM FACILITY ELECTRICAL SYSTEM. CONNECT METAL TO BE WELDED TO A GOOD EARTH GROUND. FACILITY STRUCTURAL STEEL OR PIPING MUST NOT BE USED AS A GROUND PATH.

G. AIR FLOW QUANTITIES SHOWN ARE FLOW QUANTITIES AT SITE ELEVATION.

H. EQUIPMENT MUST BE INSTALLED PER MANUFACTURER'S RECOMMENDATIONS AND INSTRUCTIONS.

I. LOCATIONS, SIZES, CLEARANCES, AND CONFIGURATIONS OF EQUIPMENT SHOWN ARE BASED ON SPECIFIC SCHEDULED MANUFACTURERS AND MODEL NUMBERS. SUBSTITUTION OF SUCH EQUIPMENT MANUFACTURERS WILL REQUIRE THE CONTRACTORS PRIOR VERIFICATION OF CONFORMANCE PER THE REQUIREMENTS OF LOCATION, SIZE CLEARANCES, AND CONFIGURATION AS COMPARED TO SPACE ALLOCATED TO HOUSE SPECIFIC EQUIPMENT. RESUBMIT PROPOSED EQUIPMENT TO CONTRACTING OFFICER'S REPRESENTATIVE (COR) FOR APPROVAL, PRIOR TO INSTALLATION.

J. PROVIDE WIRE MESH SCREENS FOR DUCT OPENINGS WITHOUT GRILLES.

K. REFER TO STRUCTURAL SHEET S001 FOR APPLICABLE WIND LOAD CRITERIA.

L. REFER TO SPECIFICATIONS FOR TESTING, ADJUSTING, AND BALANCING REQUIREMENTS.

M. PROVIDE TYPE 316 STAINLESS STEEL FOR ALL EXTERIOR METAL COMPONENTS, INCLUDING BUT NOT LIMITED TO DUCTS, HOODS, SUPPORTS, HARDWARE, BOLTS, NUTS, WASHERS, CLAMPS, AND STRUTS.

N. DRAWINGS ARE DIAGRAMMATIC IN NATURE. IT IS THE RESPONSIBILTY OF THE CONTRACTOR TO SURVEY AND VERIFY CONDITIONS PRIOR TO STARTING WORK.

FOR OFFICIAL USE ONLY
PUBLIC AVAILABILITY TO BE DETERMINED UNDER 5 USC 552

SOUTH CAROLINA PROFESSIONAL ENGINEER LICENSED 09/12/2025 No. 38497 KIMBERLY LEDWELL

JACOBS
1100 N GLEBE RD.
SUITE 500
ARLINGTON, VA 22201

REV.	APPROVED DATE	DESCRIPTION	JCN	REDLINE DATE	APVD

DEPARTMENT OF TRANSPORTATION
FEDERAL AVIATION ADMINISTRATION
CENTRAL SERVICE REGION — FT WORTH, TX

Leeville (LEV) VORTAC Replacement

HVAC LEGEND, ABBREVIATIONS, AND GENERAL NOTES

GRAND ISLE — LEEVILLE (LEV) VORTAC — LA

Jacobs

REVIEWED BY | SUBMITTED BY | APPROVED BY
SUBMITTER'S TITLE | APPROVER'S TITLE

LEEVILLE VORTAC
GRAND ISLE LOUISIANA

DESIGNED BY K. LEDWELL
DRAWN BY J. MCWALTERS
CHECKED BY K. LEADBETTER
ISSUED BY ENGINEERING SERVICES TERMINAL
DATE 9/12/2025 JCN: 1508914
DRAWING NO. LEV - D - VORTAC - M001
REV.

PLOT DATE/TIME: 9/5/2025 9:57:14 AM

DX SPLIT SYSTEM HEAT PUMP SCHEDULE - OUTDOOR UNITS

EQUIP. TAG	LOCATION	ASSOCIATED INDOOR UNIT	TOTAL CLG CAPACITY (MBH)	CLG MIN. REQ. EFFICIENCY (SEER2)	HTG CAPACITY @ 47°F (MBH)	HTG MIN. REQUIRED EFFICIENCY (HSPF2)	COMPRESSOR TYPE	CONDENSER DATA		ELEC. DATA			KNOWN ACCEPTABLE MANUFACTURER		NOTES
								AMBIENT TEMP (°F)	REFRIGERANT TYPE	V/PH/HZ	MCA (A)	MOCP (A)	MANUFACTURER	OUTDOOR UNIT MODEL	
HP-1	OUTSIDE - PLATFORM	AH-1	39.6	14.3	39.0	7.5	SCROLL	94.8	R-454B	208/1/60	24.0	40.0	TRANE	5TWR5	1-11
HP-2	OUTSIDE - PLATFORM	AH-2	39.6	14.3	39.0	7.5	SCROLL	94.8	R-454B	208/1/60	24.0	40.0	TRANE	5TWR5	1-11

NOTES:
1. PROVIDE CONDENSING UNIT HEAT PUMP TO MATCH CAPACITY REQUIRED BY INDOOR UNIT SCHEDULE AND DESIGN CONDITIONS.
2. REFER TO ELECTRICAL DWGS FOR EQUIPMENT ELECTRICAL CHARACTERISTICS.
3. SCHEDULED CAPACITIES ARE BASED UPON AHRI CONDITIONS.
4. REFER TO DIVISION 26 FOR DISCONNECT REQUIREMENTS.
5. PROVIDE HEAT PUMP STYLE UNIT WITH REVERSING VALVE AND LOW-AMBIENT COOLING DOWN TO 30°F.
6. HEATING AND COOLING MINIMUM REQUIRED EFFICIENCY VALUES ARE THE MINIMUM EQUIPMENT EFFICIENCIES REQUIRED BY ASHRAE 90.1-2022. KNOWN ACCEPTABLE SOURCE EQUIPMENT MEETS OR EXCEEDS THE SCHEDULED EFFICIENCIES.
7. PROVIDE UNIT WITH MANUFACTURER ANTICORROSION COATINGS ON CONDENSER COIL.
8. PROVIDE ADDITIONAL 3RD PARTY FIELD-APPLIED ANTICORROSION COATING ON CONDENSER COIL - BRONZ-GLOW HUSKY GOLD COIL COATING OR COR-APPROVED EQUIVALENT. COIL MUST BE COATED PRIOR TO EQUIPMENT INSTALLATION.
9. SIZE REFRIGERANT PIPING PER MANUFACTURER'S RECOMMENDATIONS.
10. PROVIDE UNIT WITH SCROLL TYPE COMPRESSOR. INVERTER-DRIVEN COMPRESSOR PROHIBITED.
11. SCHEDULED AMBIENT TEMPERATURE IS BASED UPON THE ASHRAE 0.4% COOLING CONDITION PLUS 5°F PER TFDS REQUIREMENTS.

DX SPLIT SYSTEM HEAT PUMP SCHEDULE - INDOOR UNITS

EQUIP. TAG	LOCATION	AREA SERVED	ASSOCIATED OUTDOOR UNIT	OUTSIDE AIRFLOW (CFM)	DESIGN AIRFLOW (CFM)	ESP (IN. WC)	COOLING				HEATING CAPACITY @47°F (MBH)	MIN. FILTRATION	ELEC. DATA			KNOWN ACCEPTABLE MANUFACTURER		NOTES
							TOTAL COOLING CAPACITY (MBH)	SENSIBLE COOLING CAPACITY (MBH)	EAT (DB°F/WB °F)	LAT (DB°F/WB °F)			V/PH/HZ	MCA (A)	MOCP (A)	MANUFACTURER	INDOOR UNIT MODEL	
AH-1	EQUIP RM	EQUIP RM	HP-1	--	1300	0.5	39.6	29.4	73.0/60.9	58.7/57.0	39.0	1" PLEATED - MERV8	208/1/60	5.00	15.00	TRANE	5TAMX	1-13
AH-2	EQUIP RM	EQUIP RM	HP-2	--	1300	0.5	39.6	29.4	73.0/60.9	58.7/57.0	39.0	1" PLEATED - MERV8	208/1/60	5.00	15.00	TRANE	5TAMX	1-13

NOTES:
1. PROVIDE SINGLE POINT ELECTRICAL CONNECTION TO AIR HANDLER.
2. REFER TO ELECTRICAL DWGS FOR EQUIPMENT ELECTRICAL CHARACTERISTICS.
3. PROVIDE MATCHED TONNAGE CONDENSING UNIT OR HEAT PUMP. REFER TO DX SPLIT SYSTEM HEAT PUMP SCHEDULE - OUTDOOR UNITS.
4. NOMINAL AIRFLOW IS BASED UPON KNOWN ACCEPTABLE MANUFACTURER DATA.
5. PROVIDE UNIT WITH HIGH EFFICIENCY ECM FANS AND LOW VOLTAGE THERMOSTAT INTERFACE.
6. PROVIDE UNIT WITH MANUFACTURER'S INTERNAL CONDENSATE SWITCH KIT, SIDE RETURN KIT WITH FILTER, AND SINGLE POINT POWER ENTRY KIT.
7. PROVIDE UNIT WITH MANUFACTURER ANTICORROSION COATINGS ON CONDENSER COIL.
8. PROVIDE ADDITIONAL 3RD PARTY FIELD-APPLIED ANTICORROSION COATING ON CONDENSER COIL - BRONZ-GLOW HUSKY GOLD COIL COATING OR COR-APPROVED EQUIVALENT. COIL MUST BE COATED PRIOR TO EQUIPMENT INSTALLATION.
9. REFER TO OUTDOOR UNIT SCHEDULES FOR SYSTEM EFFICIENCIES.
10. MOUNT UNIT ON MANUFACTURER'S FLOOR MOUNTED EQUIPMENT STAND.
11. SCHEDULED CAPACITIES ARE BASED UPON AHRI CONDITIONS.
12. PROVIDE UNIT WITH PACKAGED CONTROLS.
13. PROVIDE UNIT WITH REPLACEABLE FILTERS.

MECHANICAL AIR OPENINGS - HOOD SCHEDULE

WT	LOCATION	SERVICE	INTERLOCK WITH	TYPE	DESIGN AIRFLOW (CFM)	MAX. PRESSURE DROP (IN. WC)	MAX. VELOCITY (FPM)	MIN FREE AREA (SQFT)	DIMENSIONS		NOTES
									WIDTH (IN.)	HEIGHT (IN.)	
EH-1	OUTSIDE - E/G RM WALL	E/G RADIATOR CLG	--	GOOSENECK EXHAUST HOOD - 90 DEG	4,250	0.08	500	16.0	48	48	1-3,5
IH-1	OUTSIDE - E/G RM WALL	E/G RM VENTILATION AND EF-1 MUA	CD-1	GOOSENECK INTAKE HOOD - 90 DEG	8,750	0.08	500	20.0	48	60	1-5
IH-2	OUTSIDE - E/G RM WALL	EMERG. VENTILATION AND EF-2 MUA	CD-2	GOOSENECK INTAKE HOOD - 90 DEG	600	0.08	500	2.2	18	18	1-5
IH-3	OUTSIDE - EQUIP RM WALL	EMERG. VENTILATION AND EF-3 MUA	CD-3	GOOSENECK INTAKE HOOD - 90 DEG	350	0.08	500	2.2	18	18	1-5

NOTES:
1. PROVIDE TYPE 316 STAINLESS STEEL FOR GOOSENECK HOOD.
2. PROVIDE MECHANICAL AIR OPENINGS WITH TYPE 316 SS INSECT SCREEN.
3. DIMENSIONS SHOWN ARE CLEAR, INSIDE DIMENSIONS.
4. PROVIDE DUCT MOUNTED 2" FILTER RACK FOR MECHANICAL AIR INTAKE OPENINGS. PROVIDE DISPOSABLE 2" PLEATED MERV8 FILTERS.
5. PROVIDE DUCT SECURITY BARS FOR MECHANICAL AIR OPENINGS.

EXHAUST FAN SCHEDULE

EQUIP. TAG	LOCATION	SERVICE	FAN TYPE	CONFIGURATION	DRIVE TYPE	FAN DATA			MOTOR DATA		MAX. SONES	ELEC. DATA				MAX WEIGHT (LBS)	KNOWN ACCEPTABLE MANUFACTURER		NOTES
						DESIGN AIRFLOW (CFM)	ESP (IN. WC)	FAN RPM	NOM. HP	BHP		V/PH/HZ	MCA (A)	MOCP (A)	FLA (A)		MANUFACTURER	MODEL	
EF-1	OUTSIDE - E/G RM WALL	E/G RM CLG - E/G RUNNING	UPBLAST	SIDEWALL MOUNT	DIRECT	4,500	0.50	1,725	2.00	1.94	29.0	208/3/60	9.4	20.0	7.5	150	GREENHECK	CUE	1-6,8,10
EF-2	OUTSIDE - E/G RM WALL	E/G RM VENT - PROPANE PURGE	INLINE	VERTICAL	BELT	600	0.50	1,224	0.33	0.12	9.8	208/1/60	--	--	4.0	244	GREENHECK	QEI	1-2,7,8-10
EF-3	OUTSIDE - EQUIP RM WALL	BATTERY EXHAUST	UPBLAST	SIDEWALL MOUNT	DIRECT	350	0.50	1,415	0.17	0.07	6.5	208/1/60	1.9	15.0	1.5	45	GREENHECK	CUE	2,4,6,8,10

NOTES:
1. PROVIDE FAN SUITABLE TO EXHAUST AIR FROM CLASS 1 - DIVISION 2 - GROUP D - HAZARDOUS LOCATION, WITH EXPLOSION-PROOF MOTOR AND SPARK B CONSTRUCTION.
2. REFER TO DIVISION 26 FOR DISCONNECT REQUIREMENTS.
3. REFER TO DAMPER SCHEDULE FOR ASSOCIATED MOTORIZED DAMPER. REFER TO PLANS AND CONTROLS DIAGRAMS.
4. PROVIDE FAN WITH BACKDRAFT DAMPER. REFER TO PLANS AND CONTROLS DIAGRAMS.
5. SCHEDULED ESP DOES NOT INCLUDE STATIC PRESSURE ADJUSTMENTS FOR DIRECT DRIVE.
6. PROVIDE UNIT WITH INSECT SCREEN BASE WITH TYPE 316SS REMOVABLE INSECT SCREEN FOR CLEANING.
7. PROVIDE TYPE 316 SS INSECT SCREEN IN EXHAUST DUCTWORK. REFER TO DETAILS.
8. PROVIDE FAN MOTOR STARTER. REFER TO CONTROLS DIAGRAMS.
9. PROVIDE FAN WITH SPARK RESISTANT BACKDRAFT DAMPER. REFER TO PLANS AND CONTROLS DIAGRAMS.
10. MAX. WEIGHT DOES NOT INCLUDE EQUIPMENT ACCESSORIES.

CONTROL DAMPER SCHEDULE

EQUIP. TAG	SYSTEM SERVED	LOCATION	DESCRIPTION	DESIGN DUCT SIZE		BLADE TYPE	BLADE ACTION	CONTROL ACTUATOR			NOTES
				WIDTH (IN.)	HEIGHT (IN.)			CONTROL SIGNAL	CONTROL VOLTAGE	POSITION FEEDBACK	
CD-1	E/G RM INTAKE - IH-1	E/G RM	OUTSIDE AIR	48	60	AIRFOIL	PARALLEL	ON/OFF	120VAC	YES	1-4
CD-2	PROPANE VENT INTAKE - IH-2	E/G RM	OUTSIDE AIR	18	18	AIRFOIL	PARALLEL	ON/OFF	120VAC	YES	1-4
CD-3	BATTERY SYS. INTAKE - IH-3	EQUIP RM	OUTSIDE AIR	18	18	AIRFOIL	PARALLEL	ON/OFF	120VAC	YES	1, 3, 4
CD-4	E/G RM EXHAUST - EF-1	E/G RM	EXHAUST AIR	26	26	AIRFOIL	PARALLEL	ON/OFF	120VAC	YES	1-4

NOTES:
1. PROVIDE LOW-LEAKAGE CONTROL DAMPER OF TYPE 316 STAINLESS STEEL.
2. PROVIDE DAMPER ACTUATOR RATED FOR CLASS AND DIVISION OF AREA IN WHICH CONTROL DAMPER IS LOCATED.
3. REFER TO ASSOCIATED CONTROL DIAGRAM FOR DAMPER FAIL POSITION.
4. DESIGN DUCT SIZE REFERS TO CLEAR, INTERNAL DUCTWORK DIMENSIONS.

ELECTRIC UNIT HEATER SCHEDULE

EQUIP. TAG	LOCATION	SERVICE	TYPE	CONFIGURATION	PERFORMANCE DATA				CTRL		ELEC. DATA		PHYSICAL DATA		KNOWN ACCEPTABLE SOURCE		NOTES
					NOM. AIRFLOW (CFM)	CAPACITY (KW)	EAT (DB°F)	THROW (FT.)	TYPE	NO. OF STEPS	V /PH/HZ	FLA (A)	MOUNTING HEIGHT (FT.)	MAX OPERATING WEIGHT (LBS)	MANUFACTURER	MODEL	
EUH-1	E/G RM	E/G RM HTG	FAN FORCED	HORIZONTAL AIRFLOW	580	5.0	55.0	24	T'STAT	1	208/1/60	26.0	8.0	167	MARKEL	HLA	1-4

NOTES:
1. DISCONNECT TO BE PROVIDED UNDER DIVISION 26.
2. PROVIDE UNIT HEATER WITH MANUFACTURER'S HAZARDOUS LOCATION THERMOSTAT.
3. PROVIDE UNIT HEATER SUITABLE FOR CLASS 1, DIVISION 2, GROUP D HAZARDOUS LOCATION.
4. PROVIDE UNIT WITH MANUFACTURER'S HANGING MOUNTING KIT. MOUNTING KIT WEIGHT NOT INCLUDED IN SCHEDULED MAX OPERATING WEIGHT.

AIR DEVICE SCHEDULE

EQUIP TAG.	MIN AIRFLOW (CFM)	MAX AIRFLOW (CFM)	NECK SIZE	FACE SIZE	DESCRIPTION	MOUNTING	KNOWN ACCEPTABLE SOURCE		NOTES
							MANUFACTURER	MODEL	
SR1-1	1,000	1,600	24"X24"	26"X26"	DBL DEFLECTION LOUVERED SUPPLY	DUCT MOUNT	PRICE	620	1

NOTES:
1. PROVIDE AIR DEVICES OF ALUMINUM CONSTRUCTION UNLESS NOTED OTHERWISE.

PROPANE STORAGE TANK SCHEDULE

EQUIP TAG	LOCATION	SERVICE	FLUID TYPE	NOMINAL VOLUME (GALLONS)	MIN. ACTUAL TANK FILL VOLUME (%)	MAX WORKING PRESSURE (PSIG)	CONNECTION SIZES		PHYSICAL DATA				KNOWN ACCEPTABLE SOURCE		NOTES
							VENT (IN)	FILL (IN)	TANK SHAPE	OUTER DIAMETER (IN)	LENGTH (IN)	MAX. WEIGHT (LBS)	MANUFACTURER	MODEL	
PST-1	OUTSIDE - PLATFORM	E/G	PROPANE	1,000	79	250	1.25	1.25	CYLINDRICAL	40.5	190.0	1,800			1-5

NOTES:
1. PROVIDE PROPANE STORAGE TANK CERTIFIED TO ASME SECTION VIII, DIVISION 1.
2. PROVIDE TANK WITH STAIRS, GUARDRAIL, AND SERVICE PLATFORM TO ACCESS ALL PORT OPENINGS. REFER TO STRUCTURAL DWGS.
3. TANK MAX. WEIGHT SCHEDULED IS FOR EMPTY TANK.
4. PROVIDE TANK WITH MANUFACTURER VALVES AND GAUGES PACKAGE.
5. PROVIDE TANK WITH LPG MONITOR PANEL AND LPG SENSOR.

DESIGN CONDITIONS

0.4% SUMMER DESIGN DRY BULB TEMP (°F)	0.4% SUMMER DESIGN WET BULB TEMP (°F)	99.6% WINTER DESIGN DRY BULB TEMP (°F)	INDOOR DESIGN TEMPERATURE SETPOINT (°F)
89.8	78.4	36.0	73.0 ± 2.0

FOR OFFICIAL USE ONLY
PUBLIC AVAILABILITY TO BE DETERMINED UNDER 5 USC 552

SOUTH CAROLINA PROFESSIONAL ENGINEER No. 38497 09/12/2025 KIMBERLY LEDWELL

JACOBS
1100 N GLEBE RD.
SUITE 500
ARLINGTON, VA 22201

REV.	APPROVED DATE	DESCRIPTION	JCN	REDLINE DATE	APVD

DEPARTMENT OF TRANSPORTATION
FEDERAL AVIATION ADMINISTRATION
CENTRAL SERVICE REGION — FT WORTH, TX

Jacobs

Leeville (LEV) VORTAC Replacement

HVAC SCHEDULES

GRAND ISLE — LEEVILLE (LEV) VORTAC — LA

REVIEWED BY | SUBMITTED BY | APPROVED BY
SUBMITTER'S TITLE | APPROVER'S TITLE

LEEVILLE VORTAC
GRAND ISLE LOUISIANA

DESIGNED BY K. LEDWELL
DRAWN BY K. LEDWELL
CHECKED BY K. LEADBETTER

ISSUED BY: ENGINEERING SERVICES TERMINAL

DATE 9/12/2025 | JCN: 1508914
DRAWING NO. LEV - D - VORTAC - M002 | REV.

PLOT DATE/TIME: 9/5/2025 9:57:16 AM

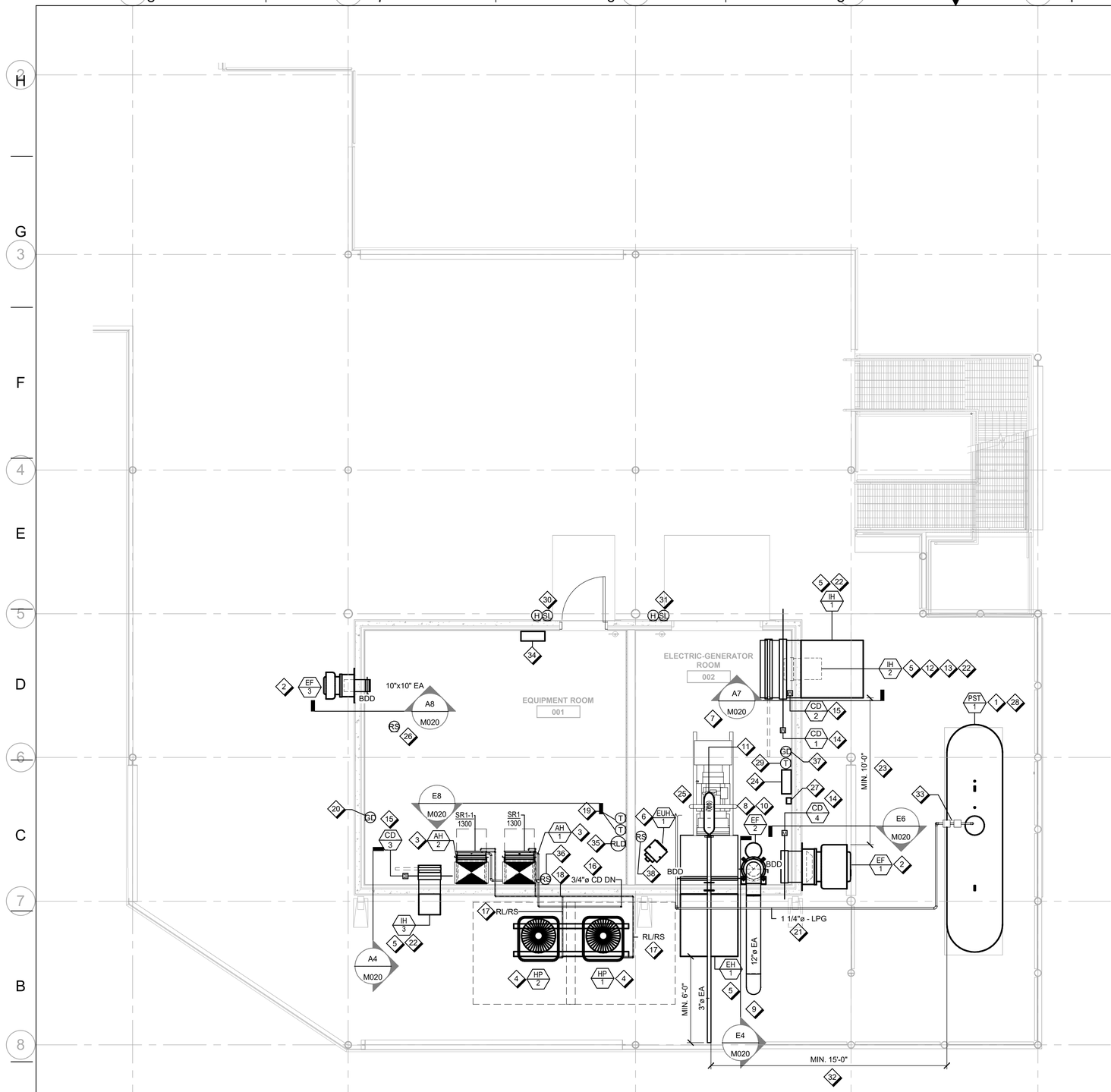

A7 / M010 HVAC ENLARGED PLAN - FACILITY SHELTER PLATFORM

1/4" = 1'-0"

GENERAL SHEET NOTES

A. REFER TO DRAWING M001 FOR SYMBOLS, ABBREVIATIONS AND GENERAL NOTES.
B. PROVIDE DUCTWORK AND PIPING SUPPORTS PER LATEST EDITION OF SMACNA.
C. SLOPE CONDENSATE DRAIN PIPING A MIN. OF 1/8" PER 1'-0".

SHEET NOTES

1 PROVIDE 1000 GALLON PROPANE STORAGE TANK. TANK MUST BE LOCATED A MINIMUM OF 10'-0" FROM BUILDING AND WITH A MINIMUM OF 2'-0" MAINTENANCE AISLE FROM EDGE OF PLATFORM. REFER TO ARCH AND STRUC DWGS.
2 PROVIDE WALL MOUNTED UPBLAST EXHAUST FAN.
3 PROVIDE DX SPLIT SYSTEM AIR HANDLER MOUNTED ON EQUIPMENT SUPPORT STAND.
4 PROVIDE DX SPLIT SYSTEM HEAT PUMP MOUNTED ON EQUIPMENT SUPPORT RAILS.
5 PROVIDE 90-DEG GOOSENECK INTAKE OR EXHAUST HOOD.
6 PROVIDE ELECTRIC UNIT HEATER WITH UNIT MOUNTED THERMOSTAT.
7 REFER TO ELECTRICAL DWGS FOR E/G.
8 PROVIDE VERTICAL INLINE VENTILATION FAN.
9 EXHAUST DISCHARGE ASSOCIATED WITH PROPANE VENTILATION MUST BE A MINIMUM OF 6'-0" FROM ANY EXTERIOR WALLS AND A MINIMUM OF 5'-0" FROM ANY OPENINGS IN THE BUILDING STRUCTURE. PROVIDE EXHAUST DISCHARGE WITH TURNED DOWN VENT TERMINATION AND SS BIRD SCREEN.
10 PROVIDE EXHAUST DUCTWORK ASSOCIATED WITH EF-2 WITH WIRE MESH OPENING AT BOTTOM OF DUCT. LOCATE OPENING MAX. 0'-6" AFF.
11 INSTALL MANUFACTURER'S SILENCER, SS FLEXIBLE EXHAUST CONNECTOR, AND WELD FLANGE KIT FOR E/G. E/G ACCESSORIES PROVIDED UNDER DIV. 26. REFER TO ENGINE GENERATOR DETAILS.
12 IH-2 LOCATED VERTICALLY BELOW IH-1.
13 LOCATE BOTTOM OF INTAKE AND ASSOCIATED CONTROL DAMPER MAX. 0'-6" AFF.
14 PROVIDE CONTROL DAMPER WITH FAST ACTING ELECTRIC ACTUATOR. REFER TO DAMPER SCHEDULE FOR ADDITIONAL INFORMATION.
15 PROVIDE CONTROL DAMPER WITH ELECTRIC ACTUATOR. REFER TO DAMPER SCHEDULE FOR ADDITIONAL INFORMATION.
16 ROUTE CONDENSATE PIPING DN TIGHT TO COLUMN. PROVIDE MIN. 4" AIR GAP AND SPLASHBLOCK AT DISCHARGE. COORDINATE LOCATION OF CONDENSATE RISER WITH STRUCTURAL MEMBERS.
17 SIZE REFRIGERANT LINES PER MANUFACTURER'S RECOMMENDATIONS. TYPICAL OF REFRIGERANT LINES.
18 REFRIGERANT LINES VERTICALLY STACKED.
19 PROVIDE NON-PROGRAMMABLE THERMOSTAT FOR DX SPLIT SYSTEM HEAT PUMP. CONNECT THERMOSTAT TO UNIT CONTROLLER IN ACCORDANCE WITH INSTRUCTIONS PROVIDED BY HEAT PUMP MANUFACTURER.
20 PROVIDE GAS DETECTOR FOR SPACE HYDROGEN MONITORING AND ALARM. INSTALL DEVICE IN ACCORDANCE WITH INSTRUCTIONS PROVIDED BY GAS DETECTOR MANUFACTURER.
21 ROUTE PROPANE PIPING APPROX. 9'-0" ABOVE PLATFORM FROM PROPANE STORAGE TANK TO E/G. COORDINATE PIPE ROUTING AND SUPPORTS WITH STRUCTURAL MEMBERS. REFER TO DETAILS E6/M025 AND E8/M025.
22 PROVIDE MECHANICAL AIR INTAKE OPENINGS WITH DUCT MOUNTED 2" FILTER RACK.
23 PROVIDE MIN. 10'-0" SEPARATION DISTANCE BETWEEN EXHAUST AIR AND OUTDOOR AIR INTAKE.
24 E/G EXHAUST SYSTEM ALARM AND CONTROL PANEL. REFER TO SHEET M031 FOR WIRING DIAGRAM ASSOCIATED WITH EXHAUST FANS AND GAS DETECTION SYSTEM.
25 REFER TO DETAILS E6/M025 AND E8/M025 FOR PROPANE GAS TRAIN FROM TANK TO E/G.
26 PROVIDE REMOTE GAS SENSOR AND CABLE AND CONNECT TO THE GAS DETECTOR. SENSOR MUST BE MOUNTED AT OR NEAR THE CEILING, AWAY FROM ANY SOURCE OF FRESH AIR.
27 PROVIDE LP GAS MONITORING PANEL (MICRO-DESIGN 94442A) FOR REMOTE PROPANE TANK. REFER TO ELECTRICAL DRAWINGS FOR COORDINATION WITH ERMS INSTALLATION.
28 REFER TO STRUC DWG S301 FOR HOIST ASSOCIATED WITH PROPANE DELIVERY HOSE.
29 PROVIDE LINE VOLTAGE THERMOSTAT FOR EF-1 CONTROL. THERMOSTAT MUST BE APPROPRIATELY RATED FOR CLASS AND DIVISION OF SPACE IN WHICH THE THERMOSTAT IS INSTALLED.
30 PROVIDE WEATHERPROOF HORN AND STROBE LIGHT FOR GAS DETECTION SYSTEM AND REFRIGERANT LEAK DETECTION SYSTEM SERVING EQUIPMENT ROOM. INSTALL DEVICE MIN. 7'-0" ABOVE THE GROUND.
31 PROVIDE WEATHERPROOF HORN AND STROBE LIGHT FOR GAS DETECTION SYSTEM SERVING E/G ROOM. INSTALL DEVICE MINIMUM 7'-0" ABOVE THE GROUND.
32 PROVIDE MIN. 15'-0" SEPARATION DISTANCE BETWEEN E/G EXHAUST PIPE AND PROPANE TANK.
33 PRIMARY AND SECONDARY REGULATOR LOCATION. REFER TO DETAIL C8/M025.
34 EQUIPMENT ROOM EXHAUST SYSTEM ALARM AND CONTROL PANEL. REFER TO SHEET M030 FOR WIRING DIAGRAM ASSOCIATED WITH EXHAUST FAN, GAS DETECTION SYSTEM, AND REFRIGERANT LEAK DETECTION SYSTEM.
35 PROVIDE REFRIGERANT LEAK DETECTOR FOR SPACE REFRIGERANT MONITORING AND ALARM. INSTALL DEVICE IN ACCORDANCE WITH INSTRUCTIONS PROVIDED BY DETECTOR MANUFACTURER.
36 PROVIDE REMOTE REFRIGERANT LEAK SENSOR AND CABLE AND CONNECT TO THE REFRIGERANT LEAK DETECTOR. INSTALL SENSOR 8 TO 10 INCHES ABOVE FLOOR LEVEL NEAR THE REFRIGERANT SOURCE OR AS RECOMMENDED BY SENSOR MANUFACTURER.
37 PROVIDE GAS DETECTOR FOR SPACE PROPANE MONITORING AND ALARM. INSTALL DEVICE IN ACCORDANCE WITH INSTRUCTIONS PROVIDED BY DETECTOR MANUFACTURER.
38 PROVIDE REMOTE GAS SENSOR AND CABLE AND CONNECT TO THE GAS DETECTOR. INSTALL SENSOR NO CLOSER THAN 12 INCHES ABOVE FLOOR LEVEL AND NO MORE THAN 45 DEGREES FROM VERTICAL OR AS RECOMMENDED BY SENSOR MANUFACTURER.

N

4 0 4 8
Scale: 1/4 INCH = 1 FOOT

FOR OFFICIAL USE ONLY
PUBLIC AVAILABILITY TO BE DETERMINED UNDER 5 USC 552

SOUTH CAROLINA LICENSED PROFESSIONAL ENGINEER 09/12/2025 No. 38497 KIMBERLY LEDWELL

JACOBS
1100 N GLEBE RD.
SUITE 500
ARLINGTON, VA 22201

REV.	APPROVED DATE	DESCRIPTION	JCN	REDLINE DATE	APVD

DEPARTMENT OF TRANSPORTATION
FEDERAL AVIATION ADMINISTRATION
CENTRAL SERVICE REGION — FT WORTH, TX

Leeville (LEV) VORTAC Replacement

HVAC ENLARGED PLAN - FACILITY SHELTER PLATFORM

GRAND ISLE — LEEVILLE (LEV) VORTAC — LA

Jacobs

LEEVILLE VORTAC
GRAND ISLE LOUISIANA

REVIEWED BY | SUBMITTED BY | APPROVED BY
SUBMITTER'S TITLE | APPROVER'S TITLE
DESIGNED BY K. LEDWELL | ISSUED BY ENGINEERING SERVICES TERMINAL | DATE 9/12/2025 | JCN: 1508914
DRAWN BY J. MCWALTERS | DRAWING NO. LEV - D - VORTAC - M010 | REV.
CHECKED BY K. LEADBETTER

PLOT DATE/TIME: 9/5/2025 9:57:17 AM

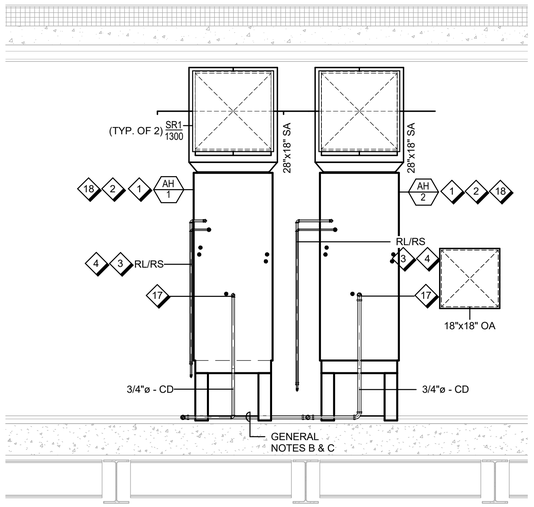

E8 M020 **SECTION VIEW - AIR HANDLERS - AH-1, AH-2**
1/2" = 1'-0"

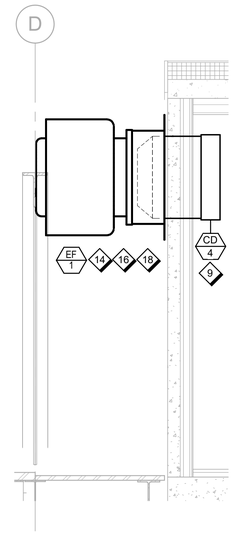

E6 M020 **SECTION VIEW - EF-1**
1/2" = 1'-0"

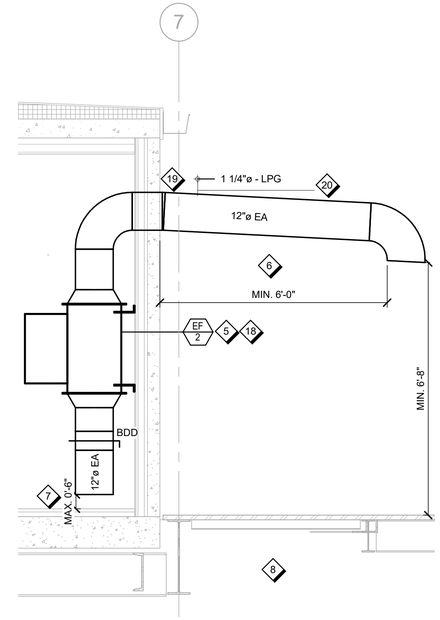

E4 M020 **SECTION VIEW - EF-2**
1/2" = 1'-0"

GENERAL SHEET NOTES

A. REFER TO DRAWING M001 FOR SYMBOLS, ABBREVIATIONS AND GENERAL NOTES.
B. PROVIDE DUCTWORK AND PIPING SUPPORTS PER LATEST EDITION OF SMACNA.
C. SLOPE CONDENSATE DRAIN PIPING A MIN. OF 1/8" PER 1'-0".

SHEET NOTES

1 PROVIDE DX SPLIT SYSTEM AIR HANDLER MOUNTED ON EQUIPMENT SUPPORT STAND.
2 PROVIDE MANUFACTURER'S SIDE RETURN KIT WITH FILTER.
3 SIZE REFRIGERANT LINES PER MANUFACTURER'S RECOMMENDATIONS. TYPICAL OF REFRIGERANT LINES.
4 REFRIGERANT LINES VERTICALLY STACKED.
5 PROVIDE VERTICAL INLINE VENTILATION FAN.
6 EXHAUST DISCHARGE ASSOCIATED WITH PROPANE VENTILATION MUST BE A MINIMUM OF 6'-0" FROM ANY EXTERIOR WALLS AND A MINIMUM OF 5'-0" FROM ANY OPENINGS IN THE BUILDING STRUCTURE. PROVIDE EXHAUST DISCHARGE WITH TURNED DOWN VENT TERMINATION AND SS BIRD SCREEN.
7 PROVIDE EXHAUST DUCTWORK ASSOCIATED WITH EF-2 WITH WIRE MESH OPENING AT BOTTOM OF DUCT. LOCATE OPENING MAX. 0'-6" AFF.
8 REFER TO SPECIFICATIONS FOR DELEGATED SEISMIC AND WIND LOAD DESIGN FOR SUPPORT OF MECHANICAL EQUIPMENT, DUCTWORK, AND PIPING.
9 PROVIDE CONTROL DAMPER WITH FAST ACTING ELECTRIC ACTUATOR. REFER TO DAMPER SCHEDULE FOR ADDITIONAL INFORMATION.
10 PROVIDE CONTROL DAMPER WITH ELECTRIC ACTUATOR. REFER TO DAMPER SCHEDULE FOR ADDITIONAL INFORMATION.
11 PROVIDE 90-DEG GOOSENECK INTAKE OR EXHAUST HOOD.
12 LOCATE BOTTOM OF INTAKE AND ASSOCIATED CONTROL DAMPER MAX. 0'-6" AFF.
13 PROVIDE MECHANICAL AIR INTAKE OPENINGS WITH DUCT MOUNTED 2" FILTER RACK.
14 PROVIDE WALL MOUNTED UPBLAST EXHAUST FAN.
15 LOCATE BOTTOM OF INTAKE AND ASSOCIATED CONTROL DAMPER A MIN. OF 2'-0" ABOVE PLATFORM LEVEL TO AVOID DEBRIS ENTRAINMENT AND MAX OF 3'-0" ABOVE PLATFORM LEVEL TO AVOID CONFLICTS WITH CABLE TRAY.
16 MOUNT EXHAUST FAN TIGHT TO STRUCTURE.
17 REFER TO A8/M023 FOR UNIT CONDENSATE DRAIN TRAP DETAIL.
18 REFER TO TYPICAL DETAILS FOR ADDITIONAL INSTALLATION REQUIREMENTS.
19 SLOPE EXHAUST DUCT AWAY FROM BUILDING, MIN. OF 1/8" PER 1'-0". REFER TO ARCH DWGS FOR DRIP EDGE.
20 COORDINATE EA DUCTWORK INSTALLATION WITH LPG PIPING AND UTILITY SUPPORT FRAMING.

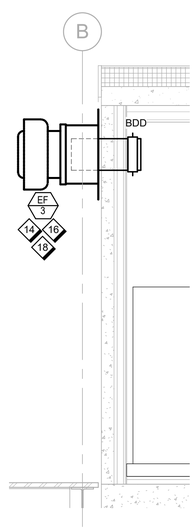

A8 M020 **SECTION VIEW - EF-3**
1/2" = 1'-0"

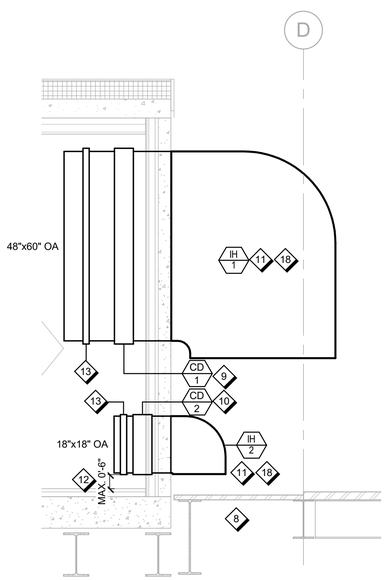

A7 M020 **SECTION VIEW - INTAKE HOODS - IH-1, IH-2**
1/2" = 1'-0"

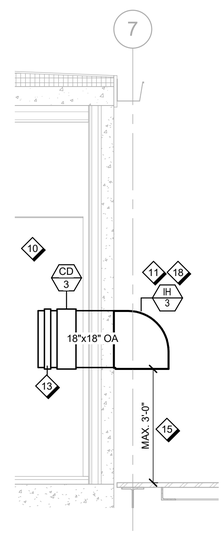

A4 M020 **SECTION VIEW - IH-3**
1/2" = 1'-0"

2 0 2 4
Scale: 1/2 INCH = 1 FOOT

FOR OFFICIAL USE ONLY
PUBLIC AVAILABILITY TO BE DETERMINED UNDER 5 USC 552

SOUTH CAROLINA LICENSED PROFESSIONAL ENGINEER 09/12/2025 No. 38497 KIMBERLY LEDWELL

JACOBS
1100 N GLEBE RD.
SUITE 500
ARLINGTON, VA 22201

REV.	APPROVED DATE	DESCRIPTION	JCN	REDLINE DATE	APVD

DEPARTMENT OF TRANSPORTATION
FEDERAL AVIATION ADMINISTRATION
CENTRAL SERVICE REGION — FT WORTH, TX

Leeville (LEV) VORTAC Replacement

HVAC SECTION VIEWS

GRAND ISLE — LEEVILLE (LEV) VORTAC — LA

REVIEWED BY | SUBMITTED BY | APPROVED BY
SUBMITTER'S TITLE | APPROVER'S TITLE

DESIGNED BY K. LEDWELL
DRAWN BY J. MCWALTERS
CHECKED BY K. LEADBETTER
ISSUED BY ENGINEERING SERVICES TERMINAL
DATE 9/12/2025 JCN: 1508914
DRAWING NO. LEV - D - VORTAC - M020 REV.

LEEVILLE VORTAC
GRAND ISLE LOUISIANA

PLOT DATE/TIME: 9/5/2025 9:57:19 AM

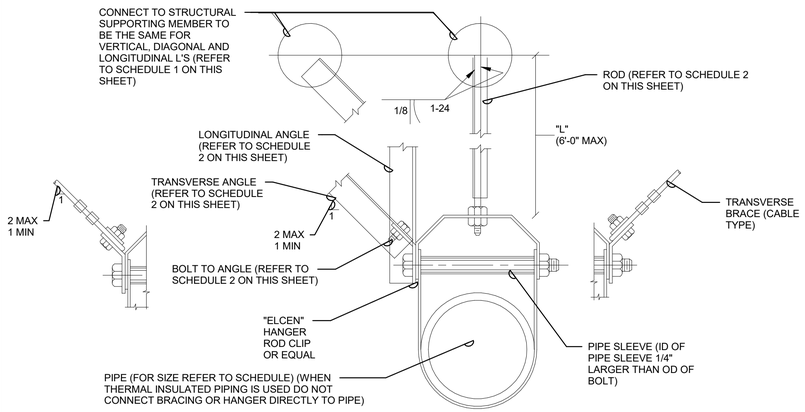

F8 TYPICAL TRANSVERSE PIPE BRACING DETAIL

M021 NOT TO SCALE

FAA STANDARD DETAIL NOT APPLICABLE

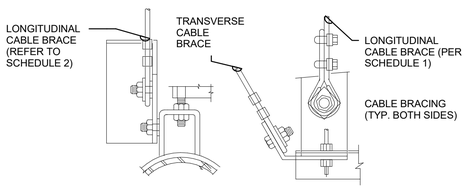

C8 CABLE BRACE

M021 NOT TO SCALE

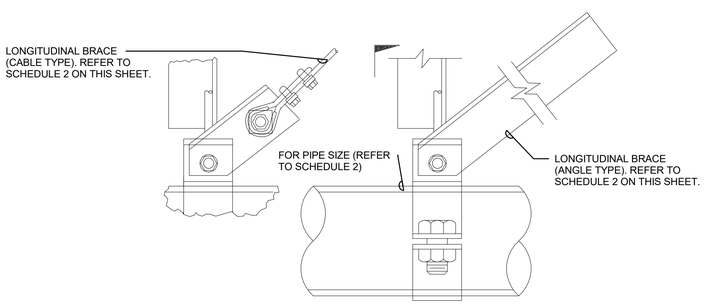

A8 TYPICAL LONGITUDINAL PIPE BRACING DETAIL

M021 NOT TO SCALE

FAA STANDARD DETAIL NOT APPLICABLE

SCHEDULE 2 - BRACING PIPES

PIPE SIZE	BOLT TO L'S (REFER TO NOTE B)	VERTICAL L'S (REFER TO NOTE C)	TRANSVERSE L'S	LONGITUDINAL L'S	MAX SPACING (FT) TRANSV	MAX SPACING (FT) LONGIT	TOP CONNECTION OF DIAGONAL & LONGITUDINAL L'S (REFER TO NOTE A)	ROD SIZE	MAX LENGTH FOR RODS
2-1/2	3/8" DIA	2-1/2x2-1/2x12 GA	3x3x16 GA (1/4" CABLE)	3x3x12 GA (1/4" CABLE)	40	80	TYPE C	5/8" DIA	31"
3	1/2" DIA	2-1/2x2-1/2x12 GA	3x3x16 GA (1/4" CABLE)	3x3x12 GA (1/4" CABLE)	40	80	TYPE D	3/4" DIA	37"
4	5/8" DIA	3x3x12 GA	3x3x12 GA (1/4" CABLE)	3x3x12 GA (1/4" CABLE)	40	80	TYPE E	7/8" DIA	43"
5	5/8" DIA	2x2x1/4 IN	3x3x12 GA (1/4" CABLE)	3x3x12 GA (1/4" CABLE)	40	80	TYPE F	1" DIA	50"
6	3/4" DIA	2-1/2x2-1/2x1/4 IN	3x3x12 GA (1/4" CABLE)	3x3x1/4 IN (1/2" CABLE)	40	80	TYPE G	1 1/8" DIA	56"
8	3/4" DIA	2x2x1/4 IN	3x3x1/4 IN (1/2" CABLE)	3x3x1/4 IN (1/2" CABLE)	40	80	TYPE F	1" DIA	50"

SCHEDULE 2 NOTES:

A. REFER TO SCHEDULE 3 ON M022.

B. PLACE STANDARD FLAT WASHERS BETWEEN SHEET METAL L'S AND NUT.

C. "VERTICAL ANGLE" IN THE SCHEDULE IS REQUIRED IN ADDITION THE HANGER ROD ONLY WHEN "MAXIMUM LENGTH FOR RODS" IS EXCEEDED.

D. TABLE BASED ON SMACNA TABLE AA-7. RESTRAINT SYSTEMS ENGINEERED BY LICENSED PROFESSIONAL ENGINEER THAT ARE EQUIVALENT TO SMACNA REQUIREMENTS MAY BE SUBSTITUTED.

FAA STANDARD DETAIL NOT APPLICABLE

SOUTH CAROLINA LICENSED PROFESSIONAL ENGINEER 09/12/2025 No. 38497 KIMBERLY LEDWELL

GENERAL NOTES FOR BRACING PIPES:

A. DETAILS AND SCHEDULES ON THIS SHEET DEPICT BOTH STEEL ANGLE TYPE AND CABLE TYPE BRACING. PROPRIETARY BRACING SYSTEMS APPROVED BY THE COR MAY BE USED IN PLACE OF THE BRACES SHOWN IN THESE DETAILS AND SCHEDULES.

B. BRACING AND CONNECTION SCHEDULES AND DETAILS ARE FOR REFERENCE ONLY. SHOP DRAWINGS AND DESIGN CALCULATIONS SATISFYING THE REQUIREMENTS OF THE SPECIFICATIONS MUST BE SUBMITTED INDICATING BRACING FOR NEW PIPING.

C. BRACE PIPES 2 1/2" DIAMETER AND LARGER:
EXCEPTIONS:
1. BRACE PIPING 1 1/4" AND LARGER LOCATED IN MECHANICAL EQUIPMENT ROOMS. BRACING REQUIREMENTS FOR PIPES LESS THAN 2 1/2" IN DIAMETER MUST BE THE SAME AS FOR 2 1/2" PIPES.

D. DETAILS SHOWN PROVIDE A LATERAL BRACING SYSTEM. A TYPICAL VERTICAL SUPPORT SYSTEM CONFORMING TO THE FOLLOWING REQUIREMENTS MUST ALSO BE USED.
1. VERTICAL PIPING
   a. ATTACHMENT - VERTICAL PIPING MUST BE SECURED AT SUFFICIENTLY CLOSE INTERVALS TO KEEP THE PIPE IN ALIGNMENT AND CARRY THE WEIGHT OF THE PIPE AND CONTENTS. STACKS MUST BE SUPPORTED AT THEIR BASES AND IF OVER 2 STORIES IN HEIGHT, AT EACH FLOOR BY APPROVED METAL FLOOR CLAMPS.
   b. SCREWED PIPE - SCREWED PIPE MUST BE SUPPORTED AT NOT LESS THAN EVERY OTHER STORY HEIGHT.
   c. COPPER TUBING - COPPER TUBING MUST BE SUPPORTED AT EACH STORY FOR PIPING 1 1/2" AND LARGER DIAMETER AND AT NOT MORE THAN 6 FOOT INTERVALS FOR PIPING 1 1/2" AND SMALLER IN DIAMETER.
   d. PIPES OF OTHER APPROVED MATERIAL MUST BE SUPPORTED IN ACCORDANCE WITH THEIR APPROVED INSTALLATION STANDARDS.
2. HORIZONTAL PIPING
   a. SUPPORTS - HORIZONTAL PIPING MUST BE SUPPORTED AT SUFFICIENTLY CLOSE INTERVALS TO KEEP IT IN ALIGNMENT AND PREVENT SAGGING.

E. DIAGONAL (TRANSVERSE) BRACINGS MUST BE AT 40'-0" OC MAXIMUM UNLESS OTHERWISE NOTED.

F. LONGITUDINAL BRACINGS MUST BE AT 40'-0" OC MAXIMUM UNLESS OTHERWISE NOTED. WHEN THERMAL EXPANSION OR CONTRACTION IS INVOLVED, PROVIDE LONGITUDINAL BRACINGS AT ANCHOR POINTS. THE LONGITUDINAL BRACES AND THE CONNECTIONS MUST BE CAPABLE OF RESISTING THE FORCE INDUCED BY EXPANSION AND CONTRACTION.

G. DIAGONAL (TRANSVERSE) BRACING FOR ONE PIPE SECTION MAY ALSO ACT AS LONGITUDINAL BRACING FOR THE PIPE SECTION CONNECTED PERPENDICULAR TO IT IF THE BRACING IS INSTALLED WITHIN 24" OF THE ELBOW OR TEE OF SIMILAR SIZE.

H. FOR THREADED PIPING, THE FLEXIBILITY MAY BE PROVIDED BY THE INSTALLATION OF SWING JOINTS. IN WELDED OR SOLDER JOINT PIPING, THE FLEXIBILITY MUST BE PROVIDED BY EXPANSION LOOPS OR MANUFACTURED FLEXIBLE CONNECTORS.

I. FOR PIPING WITH MANUFACTURED BALL JOINTS, SELECT LENGTH OF PIPING OFFSET USING "SEISMIC DRIFT IN PLACE OF EXPANSION PER JOINT MANUFACTURER'S RECOMMENDATION. SEISMIC DRIFT = 0.015 FT PER FOOT OF HEIGHT.

J. DO NOT USE BRANCH LINES TO BRACE MAIN LINES.

K. A RIGID PIPING SYSTEM MUST NOT BE BRACED TO DISSIMILAR PARTS OF A BUILDING OR TWO DISSIMILAR BUILDING SYSTEMS THAT MAY RESPOND IN A DIFFERENT MODE DURING AN EARTHQUAKE. EXAMPLES: WALL AND A ROOF; SOLID CONCRETE WALL AND A METAL DECK WITH LIGHTWEIGHT CONCRETE FILL.

L. FOR PIPE SLEEVES THROUGH WALLS AND FLOORS, MINIMUM CLEARANCE ON ALL SIDES MUST NOT BE LESS THAN 1 INCH. NO CLEARANCE IS NECESSARY FOR PIPING PASSING THROUGH GYPSUM BOARD OR EQUALLY FRANGIBLE CONSTRUCTION THAT IS NOT REQUIRED TO HAVE A FIRE RESISTANCE RATING.

M. PROVIDE THROUGH APPROVED SUBMITTAL, AT VERTICAL PIPE RISERS, WHEREVER POSSIBLE, SUPPORT THE WEIGHT OF THE RISER AT A POINT OR POINTS ABOVE THE CENTER OF GRAVITY OF THE RISER. PROVIDE LATERAL GUIDES AT THE TOP AND BOTTOM OF THE RISER AND AT INTERMEDIATE POINTS NOT TO EXCEED 30'-0" ON CENTER.

N. PROVIDE TYPE 316 STAINLESS STEEL FOR ALL HARDWARE, INCLUDING BUT NOT LIMITED TO SUPPORTS, BOLTS, NUTS, WASHERS, BRACES, CABLES, CLAMPS, AND STRUTS.

O. PROVIDE DUCTWORK SUPPORTS PER LATEST EDITION OF SMACNA AND REFER TO SPECIFICATIONS FOR DELEGATED SEISMIC AND WIND LOAD DESIGN FOR SUPPORT OF MECHANICAL EQUIPMENT, DUCTWORK, AND PIPING.

HVAC SEISMIC DETAILS AND NOTES ARE FOR REFERENCE ONLY. REFER TO SPECIFICATION 23 05 48 "VIBRATION AND SEISMIC CONTROLS FOR HVAC" FOR SEISMIC AND WIND LOAD DELEGATED DESIGN REQUIREMENTS.

FOR OFFICIAL USE ONLY
PUBLIC AVAILABILITY TO BE DETERMINED UNDER 5 USC 552

JACOBS
1100 N GLEBE RD.
SUITE 500
ARLINGTON, VA 22201

REV.	APPROVED DATE	DESCRIPTION	JCN	REDLINE DATE	APVD

DEPARTMENT OF TRANSPORTATION
FEDERAL AVIATION ADMINISTRATION
CENTRAL SERVICE REGION — FT WORTH, TX

Jacobs

Leeville (LEV) VORTAC Replacement

HVAC SEISMIC DETAILS

GRAND ISLE — LEEVILLE (LEV) VORTAC — LA

REVIEWED BY	SUBMITTED BY	APPROVED BY
	SUBMITTER'S TITLE	APPROVER'S TITLE

DESIGNED BY K. LEDWELL
DRAWN BY J. MCWALTERS
CHECKED BY K. LEADBETTER
ISSUED BY ENGINEERING SERVICES TERMINAL
DATE 9/12/2025 JCN: 1508914
DRAWING NO. LEV - D - VORTAC - M021 REV.

LEEVILLE VORTAC
GRAND ISLE LOUISIANA

PLOT DATE/TIME: 9/5/2025 9:57:19 AM

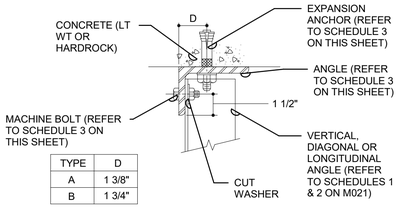

TYPE	D
A	1 3/8"
B	1 3/4"

DETAIL A
TYPE A & B

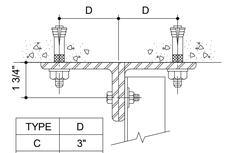

TYPE	D
C	3"
D	3 3/4"
E	4 1/2"

ITEMS NOT NOTED SAME AS DETAIL A

DETAIL B
TYPE C, D & E

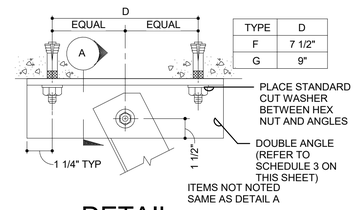

TYPE	D
F	7 1/2"
G	9"

ITEMS NOT NOTED SAME AS DETAIL A

DETAIL C
TYPE F & G

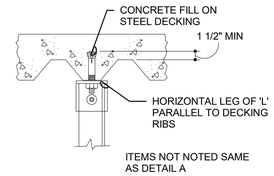

ITEMS NOT NOTED SAME AS DETAIL A

DETAIL D
TYPE A & B

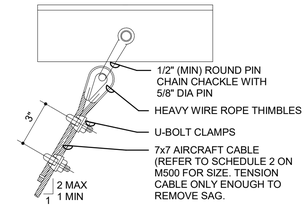

DETAIL E
TYPE A & B

NOTES:
1. IN LIEU OF ANGLE, CABLE BRACING MAY BE USED. REFER TO DETAIL E.
2. REFER TO DETAILS A THROUGH D FOR ATTACHMENT ANGLE INFORMATION

F8 M022 — CONNECTIONS TO CONCRETE DETAIL
NOT TO SCALE

SCHEDULE 3 - TYP CONNECTIONS TO STRUCTURAL SUPPORTING MEMBERS

TYPE (REFER TO NOTE 1)	MAX LOAD CAPACITY (LBS)	EXPANSION ANCHORS TO LT WT CONC (DIA & QTY) (REFER TO NOTE 3)	TEST LOAD SMACNA TABLE 8.2 (LBS)	TEST TORQUE SMACNA TABLE 8.2 (FT-LBS)	BOLT SIZE AT END OF BRACE (DIA)	SPREADER SIZE(REFER TO NOTE 2)	SIZE OF ANGLE TO SUPPORTING STRUCTURAL MEMBER
A	1040	1/2"	2000	50	3/8"	C4x5.4	L3-1/2x2-1/2x3/8x0'-3" LLH
B	1415	5/8"	2300	80	3/8"	C4x5.4	L5x3x3/8x0'-3" LLH
C	1586	1/2"x2	2000 EA.	50 EA.	1/2"	C5x6.7	2-L4x3x3/8x0'-4" LLH
D	2020	5/8"x2	2300 EA.	80 EA.	1/2"	C6x8.5	2-L5x3x3/8x0'-4" LLH
E	2870	3/4"x2	3700 EA.	150 EA.	5/8"	C8x11.5	2-L6x3-1/2x3/8x0-'4" LLH
F	4600	5/8"x4	2300 EA.	80 EA.	3/4"	C9x13.4	2-L5x3x3/8x0'-10" LLH
G	7040	3/4"x4	3700 EA.	150 EA.	7/8"	C10x15.3	2-L6x3-1/2x1/2x0'-11 1/2" LLH

SCHEDULE 3 NOTES:

1. REFER TO F8/M021 FOR APPROPRIATE DETAIL
2. 100 PERCENT OF EXPANSION TYPE ANCHORS USED FOR SEISMIC BRACING (ALTERNATE ANCHORS IN ANY GROUP ARRANGEMENT) MUST BE PROOF TESTED IN ACCORDANCE WITH SMACNA TABLE 8-2. IF ANY ANCHOR FAILS, IMMEDIATELY ADJACENT ANCHORS MUST THEN ALSO BE TESTED. TEST LOAD AND TEST TORQUE VALUES LISTED ARE FOR WEDGE TYPE ANCHORS.
3. THE DIAMETERS OF EXPANSION ANCHORS ARE INDICATED IN THIS SCHEDULE. ANCHOR EMBEDMENT LENGTH MUST BE DETERMINED FROM MANUFACTURER'S RECOMMENDATIONS ON ANCHOR CAPACITY.

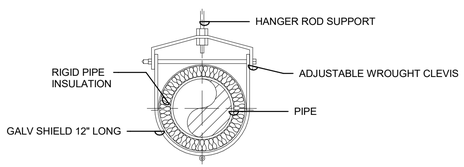

NOTES:
1. MATCH HANGER SUPPORT TO OD OF INSULATION FOR INSULATED LINE.
2. MATCH HANGER SUPPORT TO OD OF PIPE FOR UNINSULATED LINES.

C8 M022 — SINGLE PIPE HANGER DETAIL W/O BRACING
NOT TO SCALE

FAA STANDARD DETAIL NOT APPLICABLE

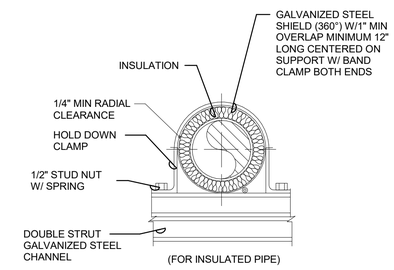

C3 M022 — PIPE CLAMP ASSEMBLY
NOT TO SCALE

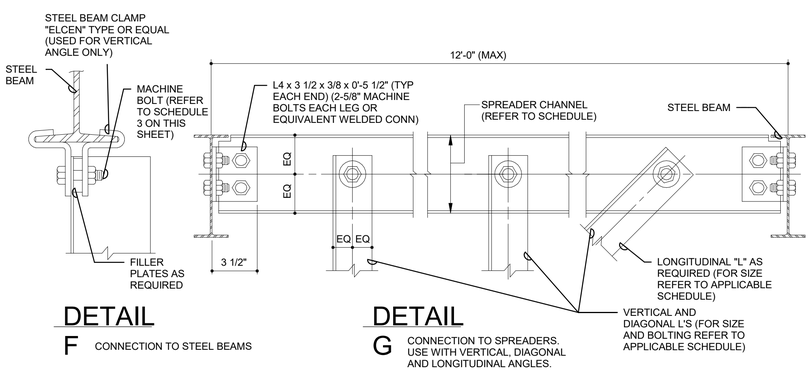

DETAIL F
CONNECTION TO STEEL BEAMS

DETAIL G
CONNECTION TO SPREADERS. USE WITH VERTICAL, DIAGONAL AND LONGITUDINAL ANGLES.

A8 M022 — CONNECTION TO STEEL DETAIL
NOT TO SCALE

FAA STANDARD DETAIL NOT APPLICABLE

HVAC SEISMIC DETAILS AND NOTES ARE FOR REFERENCE ONLY. REFER TO SPECIFICATION 23 05 48 "VIBRATION AND SEISMIC CONTROLS FOR HVAC" FOR SEISMIC AND WIND LOAD DELEGATED DESIGN REQUIREMENTS.

FOR OFFICIAL USE ONLY
PUBLIC AVAILABILITY TO BE DETERMINED UNDER 5 USC 552

SOUTH CAROLINA LICENSED PROFESSIONAL ENGINEER No. 38497 9/12/2025 KIMBERLY LEDWELL

JACOBS
1100 N GLEBE RD.
SUITE 500
ARLINGTON, VA 22201

REV.	APPROVED DATE	DESCRIPTION	JCN	REDLINE DATE	APVD

Jacobs

DEPARTMENT OF TRANSPORTATION
FEDERAL AVIATION ADMINISTRATION
CENTRAL SERVICE REGION — FT WORTH, TX

Leeville (LEV) VORTAC Replacement

HVAC SEISMIC DETAILS

GRAND ISLE — LEEVILLE (LEV) VORTAC — LA

REVIEWED BY | SUBMITTED BY | APPROVED BY
SUBMITTER'S TITLE | APPROVER'S TITLE
DESIGNED BY K. LEDWELL | ISSUED BY | DATE 9/12/2025 | JCN: 1508914
DRAWN BY J. MCWALTERS | ENGINEERING SERVICES TERMINAL | DRAWING NO. LEV - D - VORTAC - M022 | REV.
CHECKED BY K. LEADBETTER

LEEVILLE VORTAC
GRAND ISLE LOUISIANA

PLOT DATE/TIME: 9/5/2025 9:57:20 AM

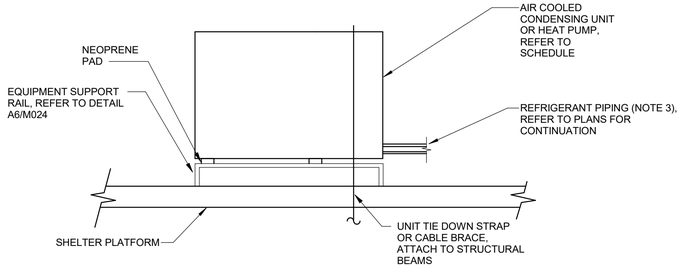

GENERAL NOTES:
1. COORDINATE EQUIPMENT SUPPORT RAIL WITH SUBMITTED EQUIPMENT AND STRUCTURAL DWGS.
2. ATTACHING AND SECURING OF EQUIPMENT TO SUPPORT MUST BE IN ACCORDANCE WITH MANUFACTURER'S INSTALLATION GUIDELINES AND SEISMIC REQUIREMENTS.
3. PROVIDE EQUIPMENT, DUCTWORK, AND/OR PIPING SUPPORTS PER LATEST EDITION OF SMACNA. REFER TO SPECIFICATIONS FOR DELEGATED SEISMIC AND WIND LOAD DESIGN FOR SUPPORT OF MECHANICAL EQUIPMENT, DUCTWORK, AND PIPING.

F8 / M023 CONDENSING UNIT/HEAT PUMP DETAIL
NOT TO SCALE

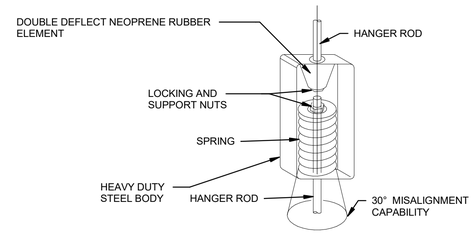

ISOLATION HANGER

NOTES:
1. MECHANICAL EQUIPMENT SUSPENDED FROM THE STRUCTURE AND EXHAUST PIPING IN MECHANICAL ROOMS MUST BE HUNG WITH VIBRATION ISOLATORS.
2. HANGER SIZE MUST BE AS PER MANUFACTURER RECOMMENDATIONS AND ACCORDING TO THE LOAD OF THE EQUIPMENT SPECIFIED.
3. PROVIDE DUCTWORK SUPPORTS PER LATEST EDITION OF SMACNA AND REFER TO SPECIFICATIONS FOR DELEGATED SEISMIC AND WIND LOAD DESIGN FOR SUPPORT OF MECHANICAL EQUIPMENT, DUCTWORK, AND PIPING.

F6 / M023 ISOLATION HANGER DETAIL
NOT TO SCALE

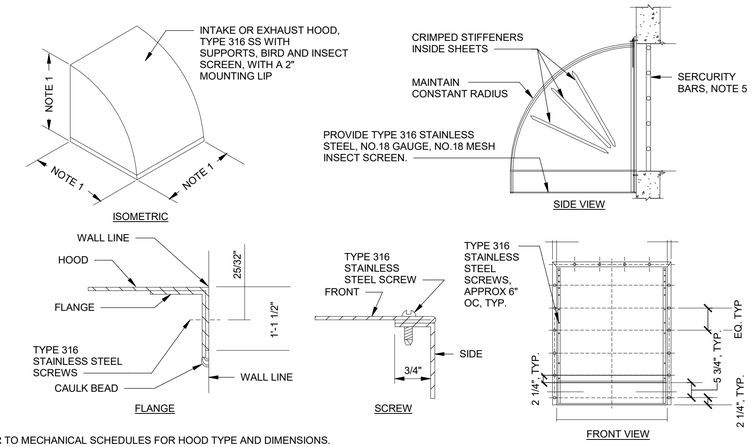

NOTES:
1. REFER TO MECHANICAL SCHEDULES FOR HOOD TYPE AND DIMENSIONS.
2. PROVIDE 1/4" NEOPRENE, 1" WIDE ON BOTH SIDES OF ALL ANGLES TO PREVENT LEAKAGE.
3. MOUNT HOOD TO WALL WITH FLANGE AND TYPE 316 STAINLESS STEEL SCREWS, APPROX. 6" OC ON ALL SIDES OF MASONRY OPENING.
4. PROVIDE INTAKE/EXHAUST HOOD SUPPORTS PER LATEST EDITION OF SMACNA AND REFER TO SPECIFICATIONS FOR DELEGATED SEISMIC/WIND LOAD DESIGN FOR SUPPORT OF MECHANICAL EQUIPMENT, ACCESSORIES, DUCTWORK, AND PIPING.
5. PROVIDE SECURITY BARS TO MECHANICAL AIR OPENINGS. REFER TO DETAIL C8/M024.

F3 / M023 EXTERIOR HOOD DETAIL
NOT TO SCALE

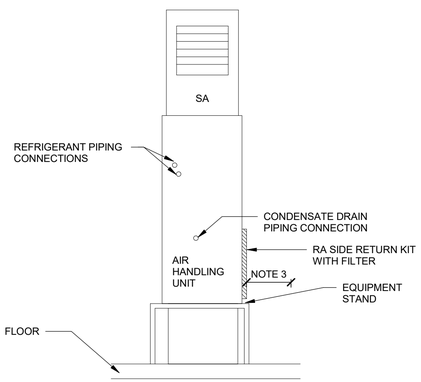

NOTES:
1. PIPING CONNECTION LOCATIONS SHOWN ARE BASED ON KNOWN ACCEPTABLE MANUFACTURER EQUIPMENT.
2. PROVIDE EQUIPMENT, DUCTWORK, AND/OR PIPING SUPPORTS PER LATEST EDITION OF SMACNA. REFER TO SPECIFICATIONS FOR DELEGATED SEISMIC AND WIND LOAD DESIGN FOR SUPPORT OF MECHANICAL EQUIPMENT, DUCTWORK, AND PIPING.
3. PROVIDE CLEARANCE FOR SIDE RETURN AIR PATH, MIN. 1'-0" OR AS RECOMMENDED BY EQUIPMENT MANUFACTURER.

C8 / M023 VERTICAL FLOOR MTD AHU DETAIL
NOT TO SCALE

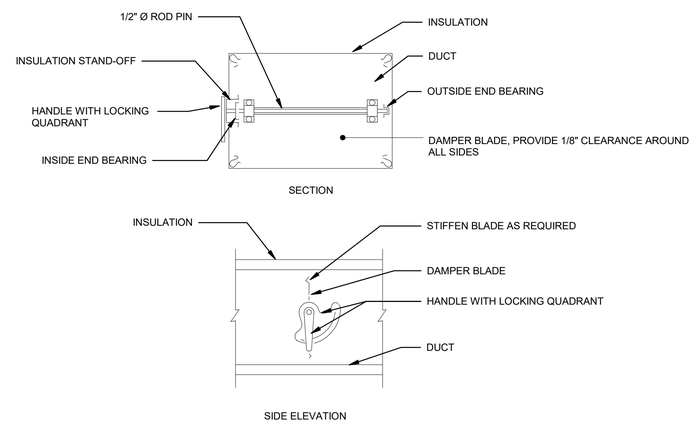

C6 / M023 MANUAL DAMPER DETAIL
NOT TO SCALE

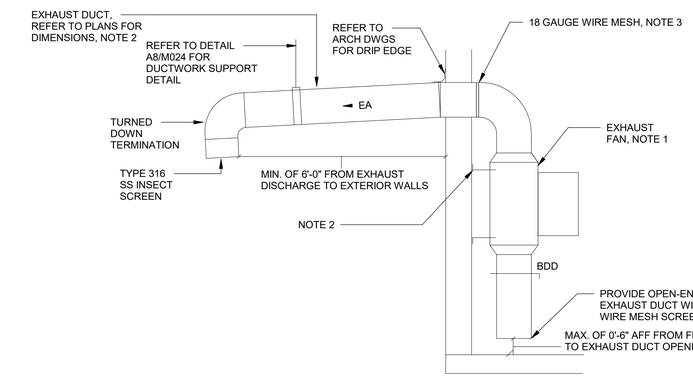

NOTES:
1. REFER TO SCHEDULES AND SPECIFICATIONS FOR EXHAUST FAN REQUIREMENTS.
2. PROVIDE DUCTWORK SUPPORTS PER LATEST EDITION OF SMACNA AND REFER TO SPECIFICATIONS FOR DELEGATED SEISMIC AND WIND LOAD DESIGN FOR SUPPORT OF MECHANICAL EQUIPMENT, DUCTWORK, AND PIPING.
3. IN LIEU OF SECURITY BARS, PROVIDE 18 GAIN WIRE MESH. SECURELY FASTEN MESH TO INSIDE OF DUCTWORK.

C3 / M023 VERTICAL INLINE EXHAUST FAN
NOT TO SCALE

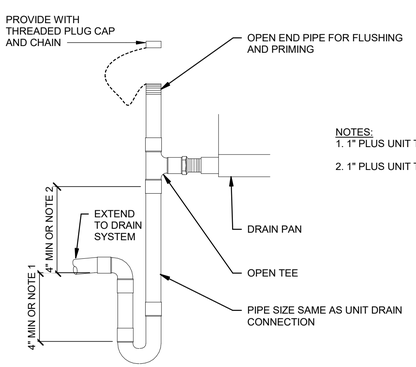

NOTES:
1. 1" PLUS UNIT TOTAL PRESSURE FOR BLOW THRU UNIT.
2. 1" PLUS UNIT TOTAL PRESSURE FOR DRAW THRU UNIT.

A8 / M023 CONDENSATE DRAIN TRAP DETAIL
NOT TO SCALE

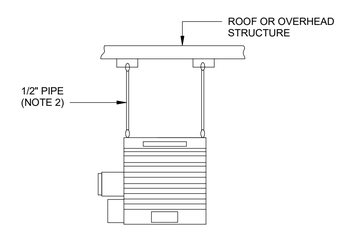

NOTES:
1. REFER TO SCHEDULES AND SPECIFICATIONS FOR ELECTRIC UNIT HEATER REQUIREMENTS. PROVIDE UNIT HEATER WITH MANUFACTURER'S HANGING MOUNTING KIT.
2. SCHEDULE 40 PIPE SUPPLIED AND INSTALLED BY CONTRACTOR.
3. PROVIDE EQUIPMENT, DUCTWORK, AND/OR PIPING SUPPORTS PER LATEST EDITION OF SMACNA. REFER TO SPECIFICATIONS FOR DELEGATED SEISMIC LOAD DESIGN FOR SUPPORT OF MECHANICAL EQUIPMENT, DUCTWORK, AND PIPING.

A6 / M023 ELECTRIC UNIT HEATER - STRUCTURE MOUNTING
NOT TO SCALE

FOR OFFICIAL USE ONLY
PUBLIC AVAILABILITY TO BE DETERMINED UNDER 5 USC 552

SOUTH CAROLINA LICENSED PROFESSIONAL ENGINEER 09/12/2025 No. 38497 KIMBERLY LEDWELL

JACOBS
1100 N GLEBE RD.
SUITE 500
ARLINGTON, VA 22201

REV.	APPROVED DATE	DESCRIPTION	JCN	REDLINE DATE	AP/VD

Jacobs

DEPARTMENT OF TRANSPORTATION
FEDERAL AVIATION ADMINISTRATION
CENTRAL SERVICE REGION — FT WORTH, TX

Leeville (LEV) VORTAC Replacement

HVAC TYPICAL DETAILS

GRAND ISLE — LEEVILLE (LEV) VORTAC — LA

REVIEWED BY	SUBMITTED BY	APPROVED BY
	SUBMITTER'S TITLE	APPROVER'S TITLE

LEEVILLE VORTAC
GRAND ISLE LOUISIANA

DESIGNED BY K. LEDWELL	ISSUED BY ENGINEERING SERVICES TERMINAL	DATE 9/12/2025	JCN: 1508914
DRAWN BY J. MCWALTERS		DRAWING NO. LEV - D - VORTAC - M023	REV.
CHECKED BY K. LEADBETTER			

PLOT DATE/TIME: 9/5/2025 9:57:20 AM

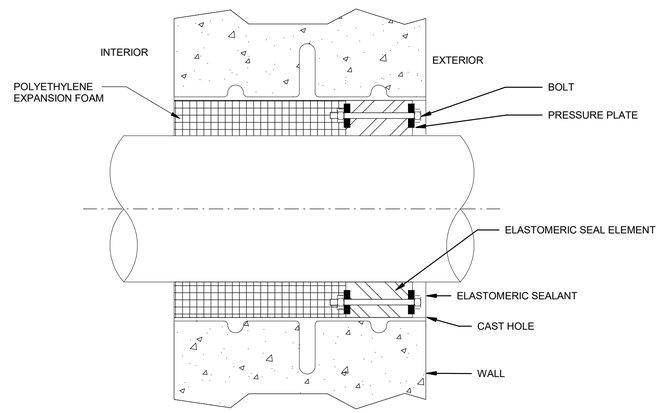

F6 M024 PIPE PENETRATION DETAIL - UNINSULATED

NOT TO SCALE

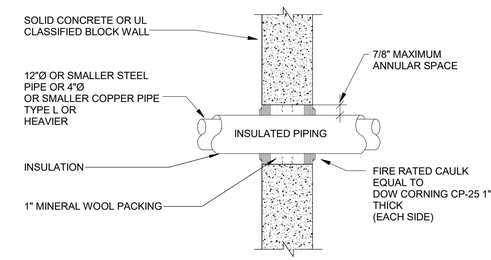

F3 M024 PIPE PENETRATION DETAIL - INSULATED

NOT TO SCALE

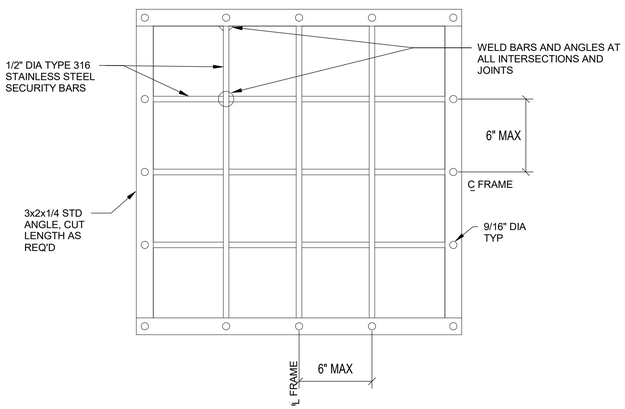

NOTES:
1. PROVIDE SECURITY BARS IN OPENINGS GREATER THAN 96 SQUARE INCHES OR WHERE ONE DIMENSION IS GREATER THAN 6 INCHES, EXCEPT WHERE INDICATED ON DRAWINGS.

C8 M024 MECHANICAL OPENING SECURITY BARS DETAIL

NOT TO SCALE

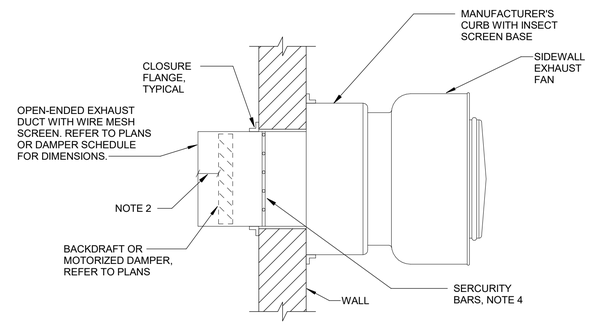

NOTES:
1. MOUNT FAN TO WALL PER MANUFACTURER INSTRUCTIONS.
2. PROVIDE THE LARGER OF: DAMPER MANUFACTURER'S MINIMUM RECOMMENDED DISTANCE OR AS INDICATED ON PLANS.
3. PROVIDE EQUIPMENT AND DUCTWORK SUPPORTS PER LATEST EDITION OF SMACNA. REFER TO SPECIFICATIONS FOR DELEGATED SEISMIC AND WIND LOAD DESIGN FOR SUPPORT OF MECHANICAL EQUIPMENT, DUCTWORK, AND PIPING.
4. PROVIDE SECURITY BARS TO SIDEWALL EXHAUST FAN OPENINGS. REFER TO DETAIL C8/M024.

C6 M024 UPBLAST EXHAUST FAN - SIDEWALL EXTERIOR

NOT TO SCALE

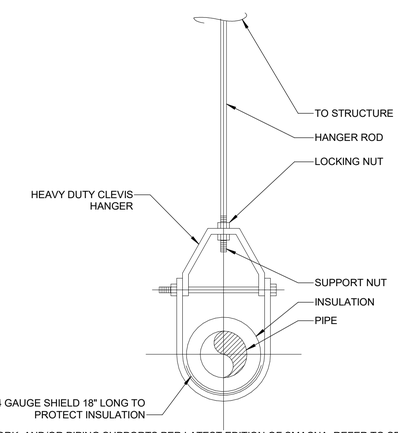

NOTES:
1. PROVIDE EQUIPMENT, DUCTWORK, AND/OR PIPING SUPPORTS PER LATEST EDITION OF SMACNA. REFER TO SPECIFICATIONS FOR DELEGATED SEISMIC AND WIND LOAD DESIGN FOR SUPPORT OF MECHANICAL EQUIPMENT, DUCTWORK, AND PIPING.

C3 M024 CLEVIS HANGER DETAIL

NOT TO SCALE

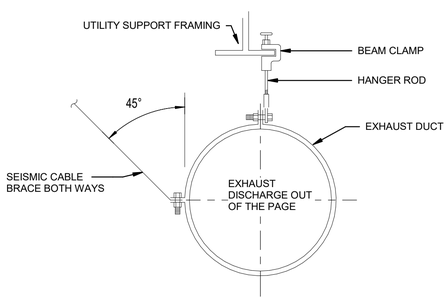

NOTES:
1. PROVIDE EQUIPMENT, DUCTWORK, AND/OR PIPING SUPPORTS PER LATEST EDITION OF SMACNA. REFER TO SPECIFICATIONS FOR DELEGATED SEISMIC AND WIND LOAD DESIGN FOR SUPPORT OF MECHANICAL EQUIPMENT, DUCTWORK, AND PIPING.

A8 M024 EXPOSED DUCT WITH DUCT SUPPORT

NOT TO SCALE

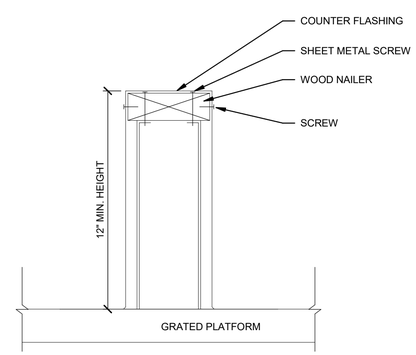

A6 M024 EQUIPMENT SUPPORT RAIL - STRAIGHT

NOT TO SCALE

FOR OFFICIAL USE ONLY
PUBLIC AVAILABILITY TO BE DETERMINED UNDER 5 USC 552

SOUTH CAROLINA LICENSED PROFESSIONAL ENGINEER 09/12/2025 No. 38497 KIMBERLY LEDWELL

JACOBS
1100 N GLEBE RD.
SUITE 500
ARLINGTON, VA 22201

REV.	APPROVED DATE	DESCRIPTION	JCN	REDLINE DATE	APVD

DEPARTMENT OF TRANSPORTATION
FEDERAL AVIATION ADMINISTRATION
CENTRAL SERVICE REGION — FT WORTH, TX

Jacobs

Leeville (LEV) VORTAC Replacement

HVAC TYPICAL DETAILS

GRAND ISLE — LEEVILLE (LEV) VORTAC — LA

REVIEWED BY	SUBMITTED BY	APPROVED BY
	SUBMITTER'S TITLE	APPROVER'S TITLE

LEEVILLE VORTAC
GRAND ISLE LOUISIANA

DESIGNED BY	K. LEDWELL	ISSUED BY	DATE 9/12/2025	JCN: 1508914
DRAWN BY	J. MCWALTERS	ENGINEERING SERVICES TERMINAL	DRAWING NO. LEV - D - VORTAC - M024	REV.
CHECKED BY	K. LEADBETTER			

PLOT DATE/TIME: 9/5/2025 9:57:21 AM

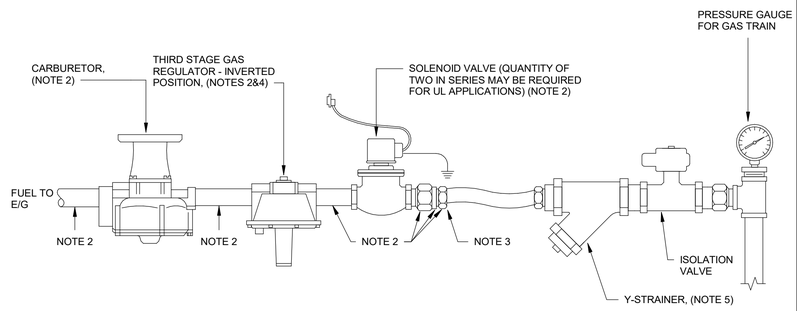

NOTES:
1. LOCATIONS AND DEVICES SHOWN ARE BASED ON KNOWN ACCEPTABLE MANUFACTURER FOR ENGINE GENERATOR.
2. PIPING, ACCESSORY, OR FITTING PROVIDED BY E/G MANUFACTURER.
3. COORDINATE PRIMARY GAS REGULATOR TO PROVIDE 5.0 - 11.0 IN. WC INCOMING TO E/G. INCOMING GAS DATA IS BASED ON KNOWN ACCEPTABLE MANUFACTURER FOR ENGINE GENERATOR.
4. THIRD STAGE GAS REGULATOR WITH OUTLET PRESSURE SETPOINT PER MANUFACTURER'S RECOMMENDATIONS.
5. Y-STRAINER PROVIDED BY E/G MANUFACTURER, SHIPPED LOOSE AND INSTALLED BY CONTRACTOR.
6. REFER TO DIVISION 26 FOR LPG PIPE GROUNDING.

E8 / M025 LP VAPOR GAS TRAIN DETAIL
NOT TO SCALE

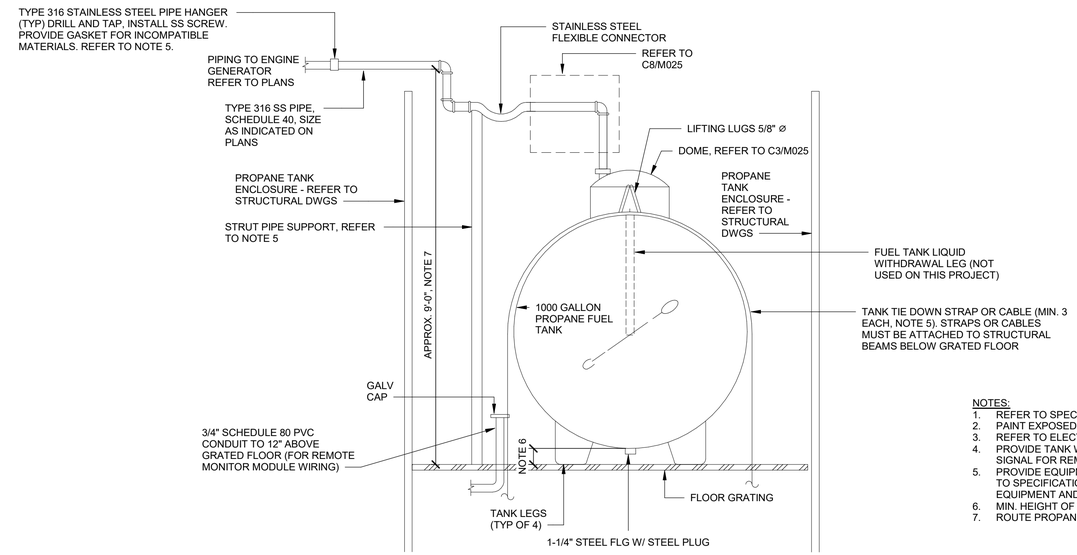

NOTES:
1. REFER TO SPECIFICATIONS FOR PROPANE PIPING AND VALVE REQUIREMENTS.
2. PAINT EXPOSED PROPANE PIPING.
3. REFER TO ELECTRICAL DWGS FOR PROPANE TANK GROUNDING REQUIREMENTS.
4. PROVIDE TANK WITH FUEL LEVEL SENSOR. FUEL LEVEL SENSOR PROVIDES LOCAL INDICATION AND SIGNAL FOR REMOTE MONITORING OF PROPANE FUEL LEVEL IN THE STORAGE TANK.
5. PROVIDE EQUIPMENT, DUCTWORK, AND/OR PIPING SUPPORTS PER LATEST EDITION OF SMACNA. REFER TO SPECIFICATIONS FOR DELEGATED SEISMIC AND WIND LOAD DESIGN FOR SUPPORT OF MECHANICAL EQUIPMENT AND PIPING.
6. MIN. HEIGHT OF 0'-2" BETWEEN BOTTOM OF TANK AND TANK SUPPORTS.
7. ROUTE PROPANE PIPING APPROX. 8'-0" ABOVE TOP OF GRATED FLOOR.

E6 / M025 END VIEW OF PROPANE TANK
NOT TO SCALE

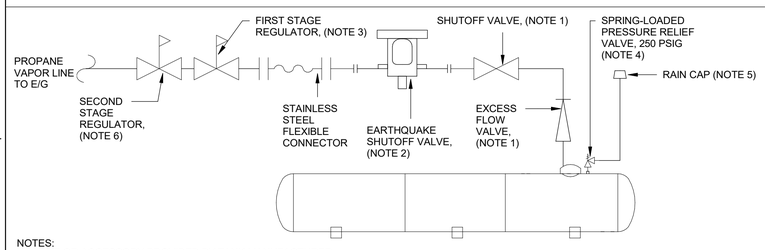

NOTES:
1. VALVE OR ACCESSORY PROVIDED BY TANK MANUFACTURER.
2. PROVIDE EARTHQUAKE SHUTOFF VALVE.
3. PROVIDE FIRST STAGE REGULATOR WITH OUTLET PRESSURE SET TO 10 PSIG.
4. PRESSURE RELIEF VALVE MUST DISCHARGE UP AND AWAY FROM TANK. PROVIDE SCHEDULE 40 TYPE 316 STAINLESS STEEL RELIEF DISCHARGE PIPING SIZED IN ACCORDANCE WITH MANUFACTURER RECOMMENDATIONS. MINIMIZE BACKPRESSURE IN RELIEF PIPING BY ROUTING AS DIRECT AS POSSIBLE TO DISCHARGE POINT AND PROVIDING MINIMAL CHANGES OF DIRECTION.
5. VENT GAS FROM PRV UPWARD AND AWAY FROM STORAGE TANK AND A MIN. OF 10'-0" FROM AIR INTAKES. PROVIDE WITH RAIN CAP TO MINIMIZE THE POSSIBILTY OF ENTRANCE OF WATER. RAIN CAP MUST AUTOMATICALLY SELF-CLOSE AND NOT RESTRICT PRV FLOW. KNOWN ACCEPTABLE MANUFACTURER EG PRODUCTS POP-TOP 250.
6. PROVIDE SECOND STAGE REGULATOR WITH OUTLET PRESSURE SET TO 0.4 PSIG.
7. REFER TO DIVISION 26 FOR LPG PIPE GROUNDING.

C8 / M025 TANK VAPOR LINE PIPING DETAIL
NOT TO SCALE

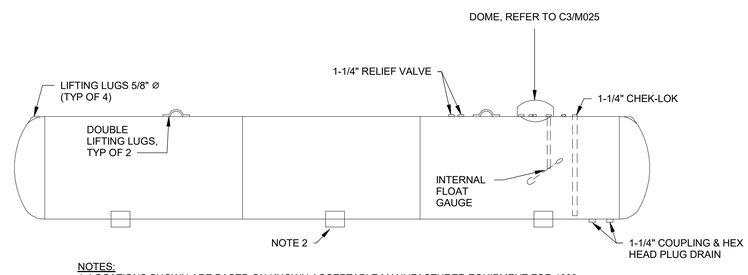

NOTES:
1. LOCATIONS SHOWN ARE BASED ON KNOWN ACCEPTABLE MANUFACTURER EQUIPMENT FOR 1000 GALLON TANK.
2. COORDINATE ADDITIONAL SUPPORTS REQUIRED BY SEISMIC AND WIND DELEGATED DESIGN WITH TANK MANUFACTURER.

C6 / M025 PROPANE TANK SIDE ELEVATION
NOT TO SCALE

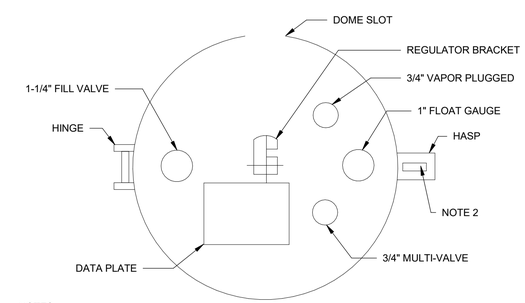

NOTES:
1. LOCATIONS SHOWN ARE BASED ON KNOWN ACCEPTABLE MANUFACTURER EQUIPMENT FOR 1000 GALLON TANK.
2. PROVIDE LOCK FOR TOP OF DOME WITH MINIMUM 2 SETS OF KEYS.

C3 / M025 TOP OF DOME DETAIL
NOT TO SCALE

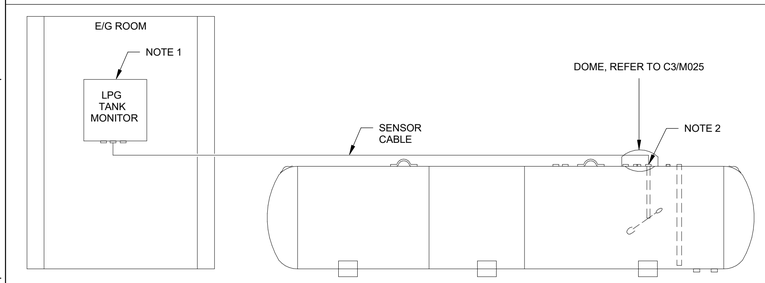

NOTES:
1. LPG MONITOR (MICRO-DESIGN 94442A) FOR REMOTE PROPANE TANK. REFER TO SHEET M010 FOR PANEL'S LOCATION.
2. PROVIDE ROCHESTER HALL EFFECT SENDER CLASS 1, DIVISION 2, GROUPS C & D FOR USE WITH LPG MONITOR. SENDER MUST BE SEALED - LEXAN TOP AND BOTTOM, ULTRASONICALLY WELDED. SENDER MUST PROVIDE LOCAL INDICATION AND SIGNAL FOR REMOTE MONITORING OF PROPANE FUEL LEVEL IN THE STORAGE TANK.

A8 / M025 REMOTE PROPANE TANK MONITOR PANEL
NOT TO SCALE

FOR OFFICIAL USE ONLY
PUBLIC AVAILABILITY TO BE DETERMINED UNDER 5 USC 552

REV.	APPROVED DATE	DESCRIPTION	JCN	REDLINE DATE	APVD

SOUTH CAROLINA LICENSED PROFESSIONAL ENGINEER 09/12/2025 No. 38497 KIMBERLY LEDWELL

JACOBS
1100 N GLEBE RD.
SUITE 500
ARLINGTON, VA 22201

Jacobs

DEPARTMENT OF TRANSPORTATION
FEDERAL AVIATION ADMINISTRATION
CENTRAL SERVICE REGION — FT WORTH, TX

Leeville (LEV) VORTAC Replacement

HVAC PROPANE TANK AND PIPING DETAILS

GRAND ISLE — LEEVILLE (LEV) VORTAC — LA

REVIEWED BY	SUBMITTED BY	APPROVED BY
	SUBMITTER'S TITLE	APPROVER'S TITLE
	DESIGNED BY K. LEDWELL	ISSUED BY ENGINEERING SERVICES TERMINAL
	DRAWN BY J. MCWALTERS	DATE 9/12/2025 — JCN: 1508914
	CHECKED BY K. LEADBETTER	DRAWING NO. LEV - D - VORTAC - M025 — REV.

LEEVILLE VORTAC
GRAND ISLE LOUISIANA

PLOT DATE/TIME: 9/5/2025 9:57:21 AM

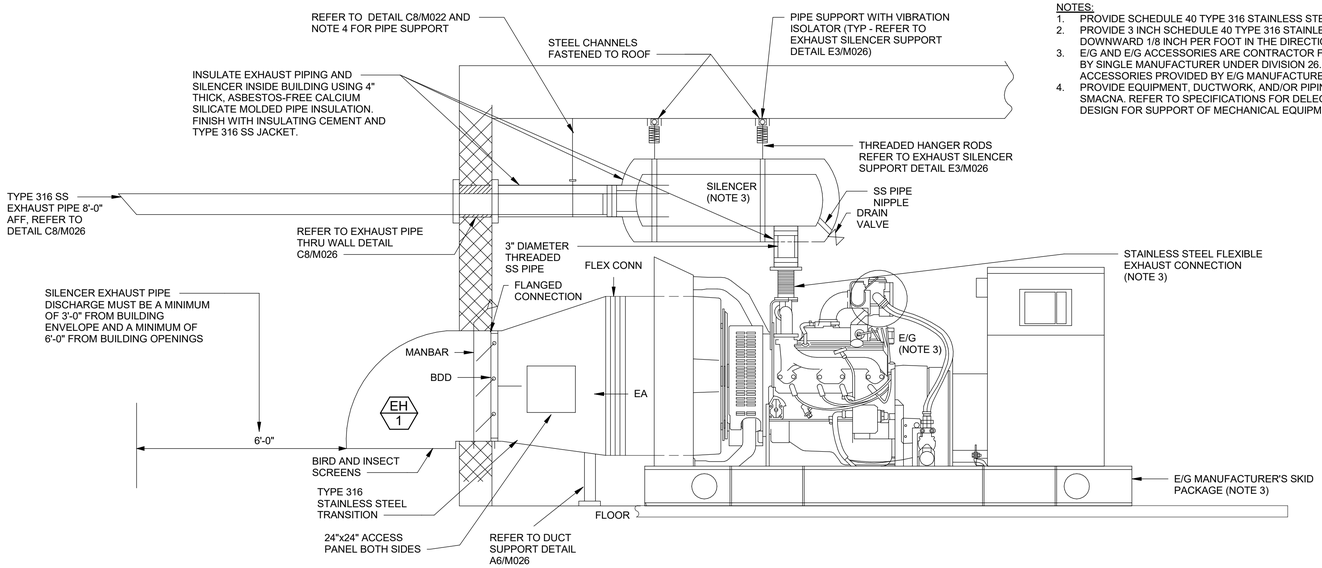

NOTES:
1. PROVIDE SCHEDULE 40 TYPE 316 STAINLESS STEEL FOR PROPANE PIPING.
2. PROVIDE 3 INCH SCHEDULE 40 TYPE 316 STAINLESS STEEL E/G EXHAUST PIPE, SLOPED DOWNWARD 1/8 INCH PER FOOT IN THE DIRECTION OF DISCHARGE.
3. E/G AND E/G ACCESSORIES ARE CONTRACTOR FURNISHED AND MUST BE PROVIDED BY SINGLE MANUFACTURER UNDER DIVISION 26. REFER TO E8/M025 FOR ADDITIONAL ACCESSORIES PROVIDED BY E/G MANUFACTURER.
4. PROVIDE EQUIPMENT, DUCTWORK, AND/OR PIPING SUPPORTS PER LATEST EDITION OF SMACNA. REFER TO SPECIFICATIONS FOR DELEGATED SEISMIC AND WIND LOAD DESIGN FOR SUPPORT OF MECHANICAL EQUIPMENT, DUCTWORK, AND PIPING.

E8 / M026 E/G ELEVATION

NOT TO SCALE

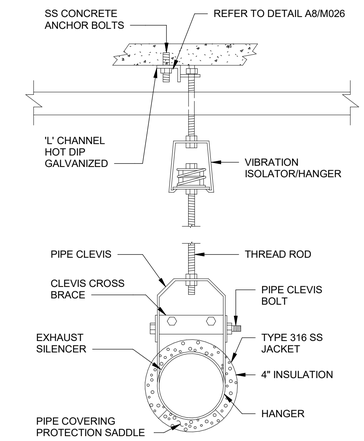

NOTES:
1. PROVIDE EQUIPMENT, DUCTWORK, AND/OR PIPING SUPPORTS PER LATEST EDITION OF SMACNA. REFER TO SPECIFICATIONS FOR DELEGATED SEISMIC AND WIND LOAD DESIGN FOR SUPPORT OF MECHANICAL EQUIPMENT, DUCTWORK, AND PIPING.

E3 / M026 EXHAUST SILENCER SUPPORT DETAIL

NOT TO SCALE

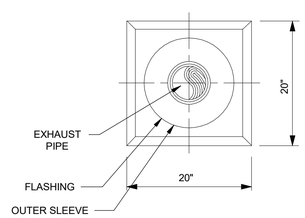

INSIDE END ELEVATION

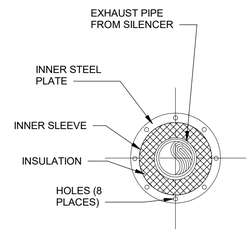

OUTSIDE END ELEVATION

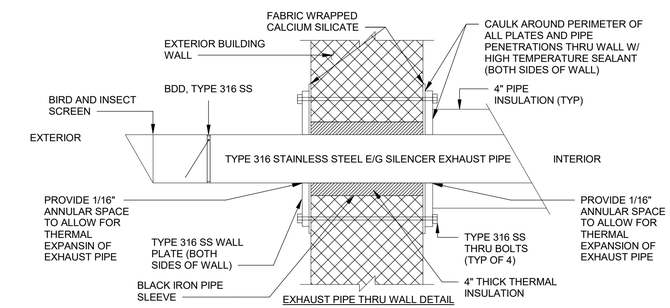

EXHAUST PIPE THRU WALL DETAIL

C8 / M026 EXHAUST PIPE WALL PENETRATION DETAILS

NOT TO SCALE

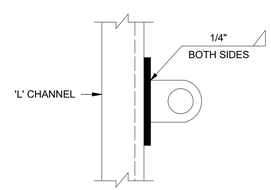

A8 / M026 'L' CHANNEL DETAIL

NOT TO SCALE

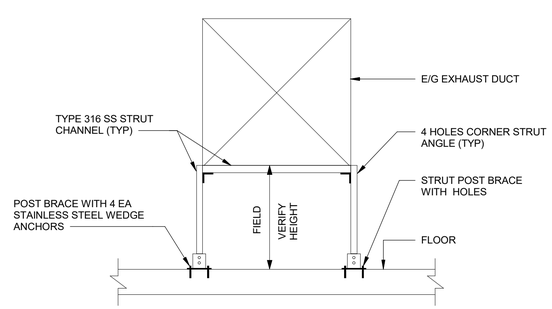

NOTES:
1. PROVIDE EQUIPMENT, DUCTWORK, AND/OR PIPING SUPPORTS PER LATEST EDITION OF SMACNA. REFER TO SPECIFICATIONS FOR DELEGATED SEISMIC AND WIND LOAD DESIGN FOR SUPPORT OF MECHANICAL EQUIPMENT, DUCTWORK, AND PIPING.

A6 / M026 DUCT SUPPORT DETAIL

NOT TO SCALE

FOR OFFICIAL USE ONLY
PUBLIC AVAILABILITY TO BE DETERMINED UNDER 5 USC 552

SOUTH CAROLINA LICENSED PROFESSIONAL ENGINEER 09/12/2025 No. 38497 KIMBERLY LEDWELL

JACOBS
1100 N GLEBE RD.
SUITE 500
ARLINGTON, VA 22201

Jacobs

REV.	APPROVED DATE	DESCRIPTION	JCN	REDLINE DATE	APVD

DEPARTMENT OF TRANSPORTATION
FEDERAL AVIATION ADMINISTRATION
CENTRAL SERVICE REGION — FT WORTH, TX

Leeville (LEV) VORTAC Replacement

ENGINE GENERATOR DETAILS

GRAND ISLE — LEEVILLE (LEV) VORTAC — LA

REVIEWED BY | SUBMITTED BY | APPROVED BY
SUBMITTER'S TITLE | APPROVER'S TITLE
DESIGNED BY K. LEDWELL | ISSUED BY ENGINEERING SERVICES TERMINAL | DATE 9/12/2025 | JCN: 1508914
DRAWN BY J. MCWALTERS | DRAWING NO. LEV - D - VORTAC - M026 | REV.
CHECKED BY K. LEADBETTER

LEEVILLE VORTAC
GRAND ISLE LOUISIANA

PLOT DATE/TIME: 9/5/2025 9:57:21 AM

CONTROLS AND INSTRUMENTATION

TS 1 — MEASURED VARIABLE OR CONTROLLED DEVICE
INSTRUMENT OR DEVICE IDENTIFICATION NUMBER
EQUIPMENT INSTRUMENT OR DEVICE NOT LOCATED IN AN ENCLOSURE

SS — MEASURED VARIABLE OR CONTROLLED DEVICE
INSTRUMENT OR DEVICE LOCATED IN AN ENCLOSURE

AX	AUXILIARY CONTACT
C	COMMON
CD	CONTROL DAMPER
CDI	CONTROL DAMPER POSITION
CS	CURRENT SENSOR
E/G	ENGINE GENERATOR
GD	GAS DETECTOR (HYDROGEN, PROPANE)
H	HORN
JB	JUNCTION BOX
M	ELECTRIC MOTOR/ACTUATOR
N.C.	NORMALLY CLOSED
N.O.	NORMALLY OPEN
PB	PUSH BUTTON WITH MOMENTARY CONTACT
PL	PILOT LIGHT
R	RELAY
RLD	REFRIGERANT LEAK DETECTOR
RS	REMOTE SENSOR (HYDROGEN, PROPANE, OR REFRIGERANT)
SL	STROBE LIGHT
SW	SWITCH
T	THERMOSTAT

CONTROL WIRING
ELECTRIC INTERLOCK WIRING
CONTACT (NORMALLY OPEN)
CONTACT (NORMALLY CLOSED)

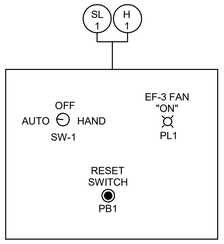

EQUIPMENT ROOM EXHAUST SYSTEM ALARM AND CONTROL PANEL FACE

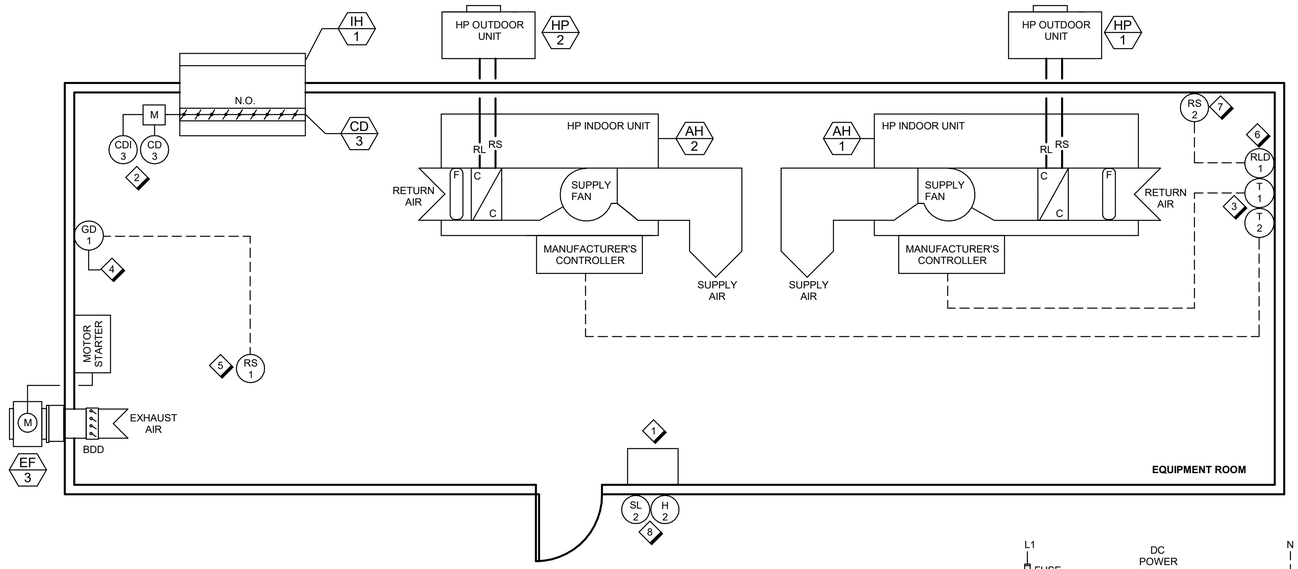

EQUIPMENT RM SEQUENCE OF OPERATIONS - AH-1/HP-1, AH-2/HP-2 & EF-3

SPLIT SYSTEM HEAT PUMP (AH-1/HP-1 & AH-2/HP-2) SEQUENCE OF OPERATIONS

GENERAL (AH-X/HP-X): SPLIT SYSTEM HEAT PUMP (AH-1/HP-1 & AH-2/HP-2) UNITS MUST OPERATE AS DESCRIBED IN SPACE TEMPERATURE CONTROL BELOW. EACH SPLIT SYSTEM HP UNIT MUST BE CONTROLLED BY A NON-PROGRAMMABLE THERMOSTAT.

UNIT LEAD/STANBY OPERATION:
1. ONE SPLIT SYSTEM HEAT PUMP MUST SERVE AS THE LEAD UNIT, WHICH MUST OPERATE 24 HOURS A DAY, SEVEN DAYS A WEEK, AND THE OTHER SPLIT SYSTEM HEAT PUMP MUST SERVE AS STANDBY UNIT, WHICH MUST BE TURNED ON AND STARTED IF THE SPACE TEMPERATURE IN THE EQUIPMENT ROOM RISES ABOVE OR DROPS BELOW SET POINTS INDICATED IN THE SEQUENCE OF OPERATION BELOW.
2. LEAD AND STANDBY UNITS MUST BE MANUALLY ROTATED QUARTERLY BY AUTHORIZED PERSONNELTO MAINTAIN EVEN USE OF THE EQUIPMENT. THIS CAN BE DONE BY ADJUSTING THE SETPOINTS AT ASSOCIATED THERMOSTATS AS REQUIRED. WHEN THIS IS DONE THE LEAD UNIT MUST BECOME THE STANDBY UNIT AND THE STANDBY UNIT MUST BECOME THE LEAD UNIT.

UNIT OPERATION: THE THERMOSTAT MUST ENABLE AND DISABLE THE UNIT TO MAINTAIN THE SPACE TEMPERATURE AT ASSOCIATED TEMPERATURE SETPOINTS.

SPACE TEMPERATURE CONTROL: EACH UNIT MUST BE PLACED IN COOLING OR HEATING MODE, AND CYCLE ON AND OFF THE COMPRESSOR TO MAINTAIN THE SPACE TEMPERATURE BETWEEN COOLING AND HEATING SET POINTS.
1. LEAD UNIT: COOLING SET POINT MUST BE SET AT 72°F (ADJ.), AND HEATING SET POINT MUST BE SET AT 69°F (ADJ.).
2. STANDBY UNIT: COOLING SET POINT MUST BE SET AT 77°F (ADJ.), AND HEATING SET POINT MUST BE SET AT 65°F (ADJ.).

COOLING MODE:
1. WHEN THE SPACE TEMPERATURE AS SENSED BY THERMOSTAT ASSOCIATED WITH LEAD UNIT RISES ABOVE COOLING SET POINT, THE THERMOSTAT MUST CONTROL THE LEAD UNIT TO MAINTAIN THE SPACE TEMPERATURE AT THE REQUIRED SETPOINT. WHEN THE SPACE TEMPERATURE DROPS BELOW THE COOLING SET POINT, THE LEAD UNIT MUST BE TURNED OFF. PROVIDE A TIME DELAY TO PREVENT SHORT-CYCLING THE COMPRESSOR.
2. IF THE SPACE TEMPERATURE AS SENSED BY THERMOSTAT ASSOCIATED WITH STANDBY UNIT RISES ABOVE THE STANDBY (BACK-UP) COOLING SET POINT, THE THERMOSTAT MUST CONTROL THE STANDBY UNIT TO MAINTAIN THE SPACE TEMPERATURE AT THE REQUIRED SETPOINT. WHEN THE SPACE TEMPERATURE DROPS BELOW THE STANDBY (BACK-UP) COOLING SET POINT, THE STANDBY UNIT MUST BE TURNED OFF. PROVIDE A TIME DELAY TO PREVENT SHORT-CYCLING THE COMPRESSOR.

HEATING MODE:
1. WHEN THE SPACE TEMPERATURE AS SENSED BY THERMOSTAT ASSOCIATED WITH LEAD UNIT DROPS BELOW HEATING SET POINT, THE THERMOSTAT MUST CONTROL THE LEAD UNIT TO MAINTAIN THE SPACE TEMPERATURE AT THE REQUIRED SETPOINT. WHEN THE SPACE TEMPERATURE RISES ABOVE THE LEAD HEATING SET POINT,THE LEAD UNIT MUST BE TURNED OFF. PROVIDE A TIME DELAY TO PREVENT SHORT-CYCLING THE COMPRESSOR.
2. IF THE SPACE TEMPERATURE AS SENSED BY THERMOSTAT ASSOCIATED WITH STANDBY UNIT DROPS BELOW THE STANDBY (BACK-UP) HEATING SET POINT, THE THERMOSTAT MUST CONTROL THE STANDBY UNIT TO MAINTAIN THE SPACE TEMPERATURE AT THE REQUIRED SETPOINT. WHEN THE SPACE TEMPERATURE RISES ABOVE THE STANDBY (BACK-UP) HEATING SET POINT, THE STANDBY UNIT MUST BE TURNED OFF. PROVIDE A TIME DELAY TO PREVENT SHORT-CYCLING THE COMPRESSOR

EXHAUST FAN (EF-3) SEQUENCE OF OPERATIONS

GENERAL: EXHAUST FAN MUST BE CONTROLLED BY A HAND-OFF-AUTO SWITCH LOCATED ON EXHAUST SYSTEM ALARM AND CONTROL PANEL AND ROOM DETECTORS AS DESCRIBED BELOW.

EXHAUST FAN OPERATION:
1. "HAND" MODE: WHEN SW-1 SWITCH IS PLACED IN THE HAND POSITION, THE OUTDOOR AIR INTAKE DAMPER (CD-3) MUST BE DE-ENERGIZED, CAUSING THE DAMPER TO OPEN. WHEN DAMPER IS OPEN, THE EXHAUST FAN MUST BE ENERGIZED THROUGH THE HARD WIRED INTERLOCK AND IT MUST RUN CONTINUOUSLY.
2. "OFF" MODE: WHEN SW-1 SWITCH IS PLACED IN THE OFF POSITION, THE OUTDOOR AIR INTAKE DAMPER (CD-3) MUST BE ENERGIZED, CAUSING THE DAMPER TO CLOSE. WHEN DAMPER IS CLOSED, THE EXHAUST FAN MUST BE DE-ENERGIZED.
3. "AUTO" MODE: WHEN THE SWITCH IS PLACED IN THE AUTO POSITION, THE ROOM GAS DETECTOR (GD-1) AND ROOM REFRIGERANT LEAK DETECTOR (GD-2) MUST START AND STOP THE FAN AS FOLLOWS:
   A. WHEN THE HYDROGEN LEVEL EXCEEDS 25% OF HYDROGEN LOWER EXPLOSIVE LIMIT (LEL) OR 1% BY VOLUME ON AIR, THE GAS DETECTOR MUST DE-ENERGIZED THE OUTDOOR AIR INTAKE DAMPER (CD-3), CAUSING THE DAMPER TO OPEN. WHEN DAMPER IS OPEN, THE EXHAUST FAN MUST BE ENERGIZED THROUGH THE HARD WIRED INTERLOCK AND IT MUST RUN CONTINUOUSLY.
   B. WHEN THE REFRIGERANT LEVEL EXCEEDS 500 PPM, THE GAS DETECTOR MUST DE-ENERGIZED THE OUTDOOR AIR INTAKE DAMPER (CD-3), CAUSING THE DAMPER TO OPEN. WHEN DAMPER IS OPEN, THE EXHAUST FAN MUST BE ENERGIZED THROUGH THE HARD WIRED INTERLOCK AND IT MUST RUN CONTINUOUSLY.
   C. WHEN ANY OF DETECTORS IS ACTIVATED, INDOOR AND OUTDOOR HORNS AND STROBES MUST BE ACTIVATED. ONCE ACTIVATED, HORNS AND STROBES MUST CONTINUE TO OPERATE UNTIL THE DETECTOR ALARM IS RESET.
   D. AN ALARM RESET SWITCH (PUSH BUTTON TYPE) IS PROVIDED ON THE EXHAUST SYSTEM ALARM AND CONTROL PANEL TO ALLOW AUTHORIZE PERSONNEL TO MANUALLY RESET DETECTOR ALARM(S) AFTER THE CAUSE OF ALARM HAS BEEN INVESTIGATED AND ADDRESSED. ONCE THE ALARM HAS BEEN RESET ON EACH DETECTOR, HORNS AND STROBES MUST BE DE-ACTIVATED, THE EXHAUST FAN EF-3 MUST STOP AND THE OUTDOOR AIR INTAKE DAMPER (CD-3) MUST CLOSE.
4. FAN STATUS
   A. THE FAN RUNNING INDICATOR PILOT LIGHT (PL-1) LOCATED ON EXHAUST SYSTEM ALARM AND CONTROL PANEL MUST BE ON WHEN THE FAN IS OPERATING.
   B. THE FAN RUNNING INDICATOR PILOT LIGHT (PL-1) LOCATED ON EXHAUST SYSTEM ALARM AND CONTROL PANEL MUST BE OFF WHEN THE FAN IS NOT OPERATING.
   C. THE FAN STATUS MUST BE MONITORED BY A CURRENT SWITCH.

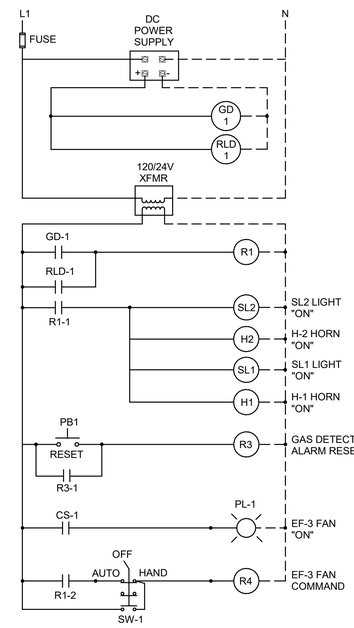

GENERAL SHEET NOTES

A. REFER TO DRAWING M001 FOR SYMBOLS, ABBREVIATIONS AND GENERAL NOTES.

SHEET NOTES

1. EQUIPMENT ROOM EXHAUST SYSTEM ALARM AND CONTROL PANEL. REFER TO WIRING DIAGRAM FOR CONTROL AND ALARM ASSOCIATED WITH EXHAUST FAN, GAS DETECTION SYSTEM, AND REFRIGERANT LEAK DETECTION SYSTEM. SEE MECHANICAL FLOOR PLAN ON SHEET M010 FOR PANEL'S LOCATION.
2. PROVIDE INTERLOCK WIRING BETWEEN EF-3 MOTOR STARTER AND CD-3 OUTDOOR AIR DAMPER. WHEN FAN IS COMMANDED TO START IN EITHER HAND OR AUTO MODE, THE DAMPER MUST OPEN. ONCE THE DAMPER IS PROVEN OPEN BY ASSOCIATED DAMPER LIMIT SWITCH, THE FAN MUST START. THE FAN MUST STOP IF DAMPER CLOSES.
3. NON-PROGRAMMABLE THERMOSTAT ASSOCIATED WITH DX SPLIT SYSTEM HEAT PUMP. SEE MECHANICAL FLOOR PLAN ON SHEET M010 FOR THERMOSTAT'S LOCATION.
4. PROVIDE GAS DETECTOR FOR SPACE HYDROGEN MONITORING AND ALARM. SEE MECHANICAL FLOOR PLAN ON SHEET M010 FOR DETECTOR'S LOCATION.
5. PROVIDE REMOTE GAS SENSOR AND CABLE AS REQUIRED. SEE MECHANICAL FLOOR PLAN ON SHEET M-010 FOR SENSOR'S LOCATION.
6. PROVIDE REFRIGERANT LEAK DETECTOR FOR SPACE REFRIGERANT MONITORING AND ALARM. SEE MECHANICAL FLOOR PLAN ON SHEET M010 FOR DETECTOR'S LOCATION.
7. PROVIDE REMOTE REFRIGERANT LEAK SENSOR AND CABLE AS REQUIRED. SEE MECHANICAL FLOOR PLAN ON SHEET M-010 FOR SENSOR'S LOCATION.
8. WEATHERPROOF HORN/STROBE LIGHT ASSOCIATED WITH GAS DETECTION SYSTEM AND REFRIGERANT LEAK DETECTION SYSTEM. SEE MECHANICAL FLOOR PLAN ON SHEET M010 FOR HORN/STROBE LIGHT'S LOCATION.

A6 / M030 CONTROL DIAGRAM - AH-1/HP-1, AH-2/HP-2, AND EF-3

NOT TO SCALE

FOR OFFICIAL USE ONLY
PUBLIC AVAILABILITY TO BE DETERMINED UNDER 5 USC 552

COMMONWEALTH OF VIRGINIA
SUNGHO JEON
Lic. No. 047302
09/12/25
PROFESSIONAL ENGINEER

JACOBS
1100 N GLEBE RD.
SUITE 500
ARLINGTON, VA 22201

REV.	APPROVED DATE	DESCRIPTION	JCN	REDLINE DATE	APVD

DEPARTMENT OF TRANSPORTATION
FEDERAL AVIATION ADMINISTRATION
CENTRAL SERVICE REGION — FT WORTH, TX

Jacobs

Leeville (LEV) VORTAC Replacement

HVAC CONTROLS - EQUIPMENT ROOM (AH-1/HP-1, AH-2/HP-2, EF-3)

GRAND ISLE — LEEVILLE (LEV) VORTAC — LA

REVIEWED BY | SUBMITTED BY | APPROVED BY
SUBMITTER'S TITLE | APPROVER'S TITLE

LEEVILLE VORTAC
GRAND ISLE LOUISIANA

DESIGNED BY M. PAUN
DRAWN BY M. PAUN
CHECKED BY R. JEON
ISSUED BY ENGINEERING SERVICES TERMINAL
DATE 9/12/2025 JCN: 1508914
DRAWING NO. LEV - D - VORTAC - M030
REV.

PLOT DATE/TIME: 9/5/2025 9:57:22 AM

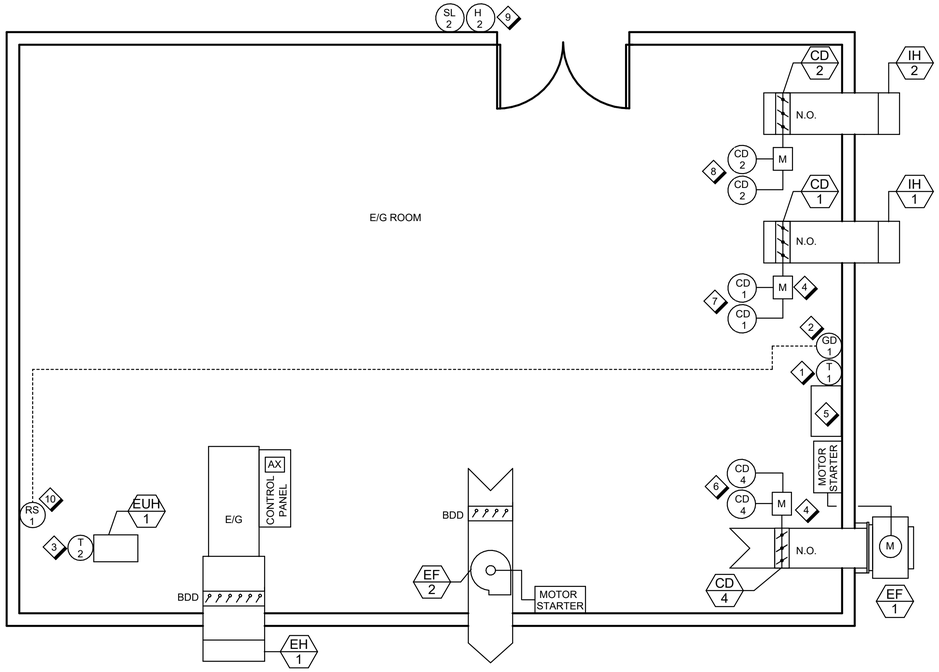

E/G ROOM SEQUENCE OF OPERATIONS - EF-1, EF-2, CD-1 & EUH-1

EXHAUST FAN (EF-1) SEQUENCE OF OPERATIONS

GENERAL: EXHAUST FAN MUST BE CONTROLLED BY A HAND-OFF-AUTO SWITCH LOCATED ON EXHAUST SYSTEM ALARM AND CONTROL PANEL AND ROOM THERMOSTAT AS DESCRIBED BELOW.

EXHAUST FAN OPERATION:

1. "HAND" MODE: WHEN THE SW-1 SWITCH IS PLACED IN THE HAND POSITION, THE ISOLATION DAMPER (CD-4) AND OUTDOOR AIR INTAKE DAMPER (CD-1) MUST BE DE-ENERGIZED, CAUSING THE DAMPERS TO OPEN. WHEN BOTH DAMPERS ARE OPEN, THE EXHAUST FAN MUST BE ENERGIZED THROUGH THE HARD WIRED INTERLOCK AND IT MUST RUN CONTINUOUSLY.
2. "OFF" MODE: WHEN THE SW-1 SWITCH IS PLACED IN THE OFF POSITION, THE ISOLATION DAMPER (CD-4) AND OUTDOOR AIR INTAKE DAMPER (CD-1) MUST BE ENERGIZED, CAUSING THE DAMPERS TO CLOSE. WHEN BOTH DAMPERS ARE CLOSED, THE EXHAUST FAN MUST BE DE-ENERGIZED.
3. "AUTO" MODE: WHEN THE SW-1 SWITCH IS PLACED IN THE AUTO POSITION, THE ROOM THERMOSTAT (T-1) MUST START AND STOP THE FAN TO MAINTAIN THE SPACE TEMPERATURE ROOM.
   A. IF THE TEMPERATURE IN THE SPACE, AS SENSED BY THERMOSTAT (T-1), RISES ABOVE 90°F (ADJ.), THE THERMOSTAT MUST DE-ENERGIZED THE ISOLATION DAMPER (CD-4) AND OUTDOOR AIR INTAKE DAMPER (CD-1), CAUSING THE DAMPERS TO OPEN. WHEN BOTH DAMPERS ARE OPEN, THE EXHAUST FAN MUST BE ENERGIZED THROUGH THE HARD WIRED INTERLOCK AND IT MUST RUN CONTINUOUSLY
   B. IF THE TEMPERATURE IN THE SPACE, AS SENSED BY THERMOSTAT (T-1), FALLS BELOW SETPOINT, THE THERMOSTAT MUST ENERGIZE THE ISOLATION DAMPER (CD-4) AND OUTDOOR AIR INTAKE DAMPER (CD-1), CAUSING THE DAMPERS TO CLOSE. WHEN BOTH DAMPERS ARE CLOSED, THE EXHAUST FAN MUST BE DE-ENERGIZED.
4. FAN STATUS:
   A. THE FAN RUNNING INDICATOR PILOT LIGHT (PL-1) LOCATED ON EXHAUST SYSTEM ALARM AND CONTROL PANEL MUST BE ON WHEN THE FAN IS OPERATING.
   B. THE FAN RUNNING INDICATOR PILOT LIGHT (PL-1) LOCATED ON EXHAUST SYSTEM ALARM AND CONTROL PANEL MUST BE OFF WHEN THE FAN IS NOT OPERATING.
   C. THE FAN STATUS MUST BE MONITORED BY A CURRENT SWITCH.

ELECTRIC UNIT HEATER (EUH-1) SEQUENCE OF OPERATIONS

GENERAL: THE ELECTRIC UNIT HEATER MUST BE CONTROLLED BY UNIT-MOUNTED THERMOSTAT PROVIDED BY THE UNIT MANUFACTURER.

UNIT HEATER OPERATION:

1. WHEN THE TEMPERATURE DROPS BELOW THE SET POINT, INITIALLY SET AT 55°F (ADJUSTABLE), THE UNIT HEATER FAN MUST OPERATE AND THE ELECTRIC HEATER MUST BE ENABLED.
2. WHEN THE TEMPERATURE RISES ABOVE THE SET POINT, THE ELECTRIC HEATER MUST BE DISABLED AND THE UNIT HEATER FAN MUST STOP.

UNIT HEATER INTERLOCK: IF THE ENGINE GENERATOR IS RUNNING OR PROPANE GAS LEAK IS DETECTED, THE UNIT HEATER MUST BE DE-ENERGIZED THROUGH THE HARD WIRED INTERLOCK.

EXHAUST FAN (EF-2) SEQUENCE OF OPERATIONS

GENERAL: EXHAUST FAN MUST BE CONTROLLED BY A HAND-OFF-AUTO SWITCH LOCATED ON EXHAUST SYSTEM ALARM AND CONTROL PANEL AND ROOM DETECTOR AS DESCRIBED BELOW.

EXHAUST FAN OPERATION:

1. "HAND" MODE: WHEN THE SW-2 SWITCH IS PLACED IN THE HAND POSITION, THE OUTDOOR AIR INTAKE DAMPER (CD-2) MUST BE DE-ENERGIZED, CAUSING THE DAMPER TO OPEN. WHEN DAMPER IS OPEN, THE EXHAUST FAN MUST BE ENERGIZED THROUGH THE HARD WIRED INTERLOCK AND IT MUST RUN CONTINUOUSLY.
2. "OFF" MODE: WHEN THE SW-2 SWITCH IS PLACED IN THE OFF POSITION, THE OUTDOOR AIR INTAKE DAMPER (CD-2) MUST BE ENERGIZED, CAUSING THE DAMPER TO CLOSE. WHEN DAMPER IS CLOSED, THE EXHAUST FAN MUST BE DE-ENERGIZED.
3. "AUTO" MODE: WHEN THE SW-2 SWITCH IS PLACED IN THE AUTO POSITION, THE ROOM GAS DETECTOR (GD-1) MUST START AND STOP THE FAN AS FOLLOWS:
   A. WHEN THE PROPANE LEVEL EXCEEDS LOWER EXPLOSIVE LIMIT OF 1.5%LEL (ADJUSTABLE), THE GAS DETECTOR MUST DE-ENERGIZED THE OUTDOOR AIR INTAKE DAMPER (CD-2), CAUSING THE DAMPER TO OPEN. WHEN DAMPER IS OPEN, THE EXHAUST FAN MUST BE ENERGIZED THROUGH THE HARD WIRED INTERLOCK AND IT MUST RUN CONTINUOUSLY.
   B. WHEN THE GAS DETECTOR IS ACTIVATED, INDOOR AND OUTDOOR HORNS AND STROBES MUST BE ACTIVATED. ONCE ACTIVATED, HORNS AND STROBES MUST CONTINUE TO OPERATE UNTIL THE DETECTOR ALARM IS RESET.
   C. AN ALARM RESET SWITCH (PUSH BUTTON TYPE) IS PROVIDED ON THE EXHAUST SYSTEM ALARM AND CONTROL PANEL TO ALLOW AUTHORIZE PERSONNEL TO MANUALLY RESET DETECTOR ALARM AFTER THE CAUSE OF ALARM HAS BEEN INVESTIGATED AND ADDRESSED. ONCE THE ALARM HAS BEEN RESET ON DETECTOR, HORNS AND STROBES MUST BE DE-ACTIVATED, THE EXHAUST FAN EF-2 MUST STOP AND THE OUTDOOR AIR INTAKE DAMPER (CD-2) MUST CLOSE.
4. FAN STATUS:
   A. THE FAN RUNNING INDICATOR PILOT LIGHT (PL-2) LOCATED ON EXHAUST SYSTEM ALARM AND CONTROL PANEL MUST BE ON WHEN THE FAN IS OPERATING.
   B. THE FAN RUNNING INDICATOR PILOT LIGHT (PL-2) LOCATED ON EXHAUST SYSTEM ALARM AND CONTROL PANEL MUST BE OFF WHEN THE FAN IS NOT OPERATING.
   C. THE FAN STATUS MUST BE MONITORED BY A CURRENT SWITCH.

COMBUSTION AIR DAMPER (CD-1) SEQUENCE OF OPERATIONS

GENERAL: COMBUSTION AIR DAMPER MUST BE INTERLOCKED WITH OPERATION OF ENGINE GENERATOR AND/OR EF-1 FAN.

CD-1 INTERLOCK WITH ENGINE GENERATOR:

1. WHEN ENGINE GENERATOR IS OFF, CD-1 MUST BE CLOSED.
2. WHEN ENGINE GENERATOR IS ON, CD-1 MUST BE OPEN.

CD-1 INTERLOCK WITH EF-1 FAN: SEE EF-1 SEQUENCE OF OPERATIONS FOR CONTROL OF CD-1 DAMPER.

A8 / M031 CONTROL & WIRING DIAGRAMS - E/G ROOM (EF-1, EF-2, EUH-1)

NOT TO SCALE

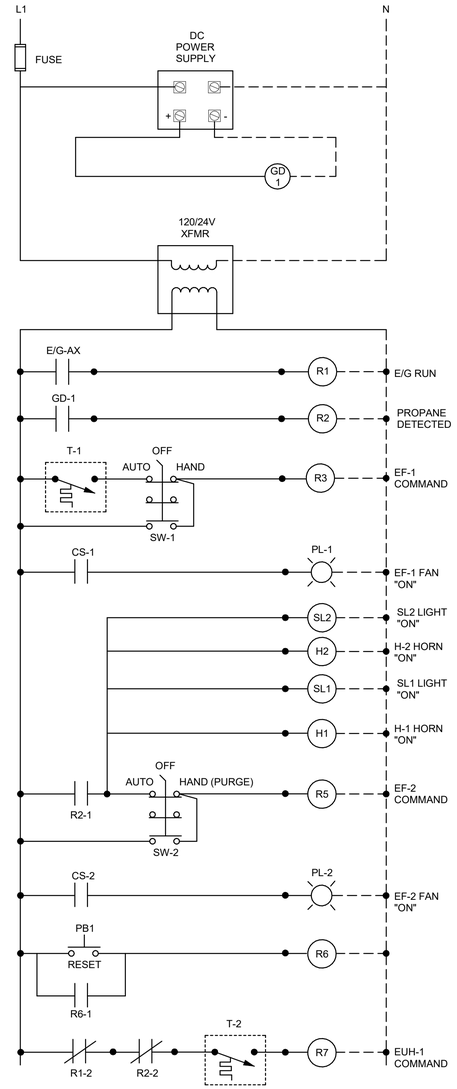

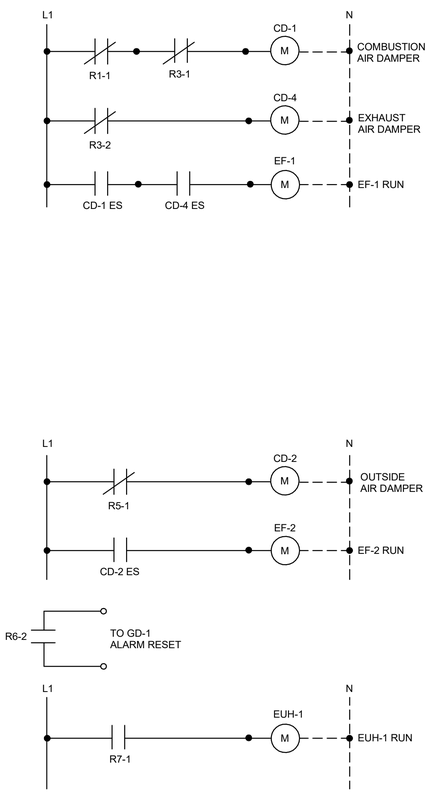

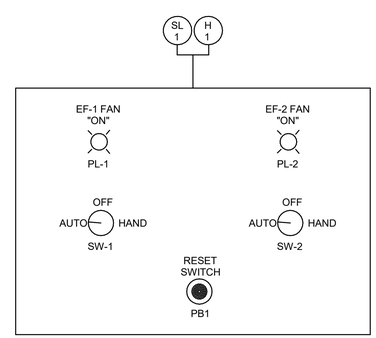

E/G EXHAUST SYSTEM ALARM AND CONTROL PANEL FACE

GENERAL SHEET NOTES

A. REFER TO DRAWING M001 FOR SYMBOLS, ABBREVIATIONS AND GENERAL NOTES.

SHEET NOTES

1. PROVIDE EXPLOSION-PROOF LINE VOLTAGE THERMOSTAT ASSOCIATED WITH EF-1. THERMOSTAT MUST BE APPROPRIATELY RATED FOR CLASS AND DIVISION OF SPACE IN WHICH THE THERMOSTAT IS INSTALLED. SEE MECHANICAL FLOOR PLAN ON SHEET M010 FOR THERMOSTAT'S LOCATION.
2. PROVIDE GAS DETECTOR FOR PROPANE MONITORING AND ALARM. GAS DETECTOR MUST BE APPROPRIATELY RATED FOR CLASS AND DIVISION OF SPACE IN WHICH THE DETECTOR IS INSTALLED. SEE MECHANICAL FLOOR PLAN ON SHEET M010 FOR DETECTOR'S LOCATION.
3. UNIT-MOUNTED THERMOSTAT PROVIDED BY UNIT HEATER MANUFACTURER. THERMOSTAT MUST BE APPROPRIATELY RATED FOR CLASS AND DIVISION OF SPACE IN WHICH THE UNIT HEATER IS INSTALLED.
4. PROVIDE FAST ACTING SPRING RETURN DAMPER ACTUATOR FOR COMBUSTION AIR DAMPER.
5. E/G EXHAUST SYSTEM ALARM AND CONTROL PANEL. REFER TO WIRING DIAGRAM FOR CONTROL AND ALARM ASSOCIATED WITH EXHAUST FANS AND GAS DETECTION SYSTEM. SEE MECHANICAL FLOOR PLAN ON SHEET M010 FOR PANEL'S LOCATION.
6. WIRING INTERLOCKS BETWEEN EXHAUST AIR DAMPER AND EF-1. REFER TO WIRING DIAGRAM FOR INTERLOCKS BETWEEN EXHAUST AIR DAMPER AND EF-1.
7. WIRING INTERLOCKS BETWEEN CD-1 COMBUSTION AIR DAMPER, EF-1 AND E/G. REFER TO WIRING DIAGRAM FOR INTERLOCKS BETWEEN COMBUSTION AIR DAMPER AND EF-1 AND E/G.
8. WIRING INTERLOCKS BETWEEN OUTSIDE AIR DAMPER, CD-2, AND EF-2. REFER TO WIRING DIAGRAM FOR INTERLOCKS BETWEEN OUTSIDE AIR DAMPER AND EF-2.
9. WEATHERPROOF HORN/STROBE LIGHT ASSOCIATED WITH PROPANE DETECTION SYSTEM. SEE MECHANICAL FLOOR PLAN ON SHEET M010 FOR STROBE LIGHT'S LOCATION.
10. PROVIDE REMOTE GAS SENSOR AND CABLE AND CONNECT TO THE GAS DETECTOR. SENSOR MUST BE APPROPRIATELY RATED FOR CLASS AND DIVISION OF SPACE IN WHICH THE SENSOR IS INSTALLED. SEE MECHANICAL FLOOR PLAN ON SHEET M010 FOR DETECTOR'S LOCATION.

FOR OFFICIAL USE ONLY

PUBLIC AVAILABILITY TO BE DETERMINED UNDER 5 USC 552

COMMONWEALTH OF VIRGINIA
SUNGHO JEON
Lic. No. 047302
09/12/25
PROFESSIONAL ENGINEER

JACOBS
1100 N GLEBE RD.
SUITE 500
ARLINGTON, VA 22201

REV.	APPROVED DATE	DESCRIPTION	JCN	REDLINE DATE	APVD

DEPARTMENT OF TRANSPORTATION
FEDERAL AVIATION ADMINISTRATION
CENTRAL SERVICE REGION — FT WORTH, TX

Leeville (LEV) VORTAC Replacement

HVAC CONTROLS - E/G ROOM (EF-1, EF-2, EUH-1)

GRAND ISLE — LEEVILLE (LEV) VORTAC — LA

Jacobs

LEEVILLE VORTAC
GRAND ISLE LOUISIANA

REVIEWED BY	
SUBMITTED BY	
SUBMITTER'S TITLE	
APPROVED BY	
APPROVER'S TITLE	
DESIGNED BY	M. PAUN
DRAWN BY	M. PAUN
CHECKED BY	R. JEON
ISSUED BY	ENGINEERING SERVICES TERMINAL
DATE	9/12/2025
JCN:	1508914
DRAWING NO.	LEV - D - VORTAC - M031
REV.	

PLOT DATE/TIME: 9/5/2025 9:57:23 AM

ELECTRICAL ABBREVIATIONS

	#	NUMBER
A	-	-
	AACS	AUTOMATED ACCESS CONTROL SYSTEM
	A	AMPERE (AMPS)
	AC	ALTERNATING CURRENT
	AF	AMPERE-FRAME
	AFF	ABOVE FINISHED FLOOR
	AFG	ABOVE FINISHED GRADE
	AHJ	AUTHORITY HAVING JURISDICTION
	AIC	AMPERE INTERRUPTING CURRENT
	AS	AMPERE-SENSOR
	ASD	ADJUSTABLE SPEED DRIVE
	AT	AMPERE-TRIP
	ATS	AUTOMATIC TRANSFER SWITCH
	AUTO	AUTOMATIC
	AUX	AUXILIARY
	AWG	AMERICAN WIRE GAUGE
B	-	-
	BATT	BATTERY
	BC	BARE COPPER
	BFF	BELOW FINISHED FLOOR
	BFG	BELOW FINISHED GRADE
	BIL	BASIC IMPLULSE LEVEL
	BKR	BREAKER
	BKBD	BACKBOARD
C	-	-
	C	CONDUIT
	CAB	CABINET
	CB	CIRCUIT BREAKER
	CBS	CENTRAL BATTERY SYSTEM
	CCTV	CLOSED CIRCUIT TELEVISION
	CKT	CIRCUIT
	CMH	COMMUNICATIONS MANHOLE
	CTRL T	CONTROLS TRANSFORMER
	CO	CONDUIT ONLY
	COMM	COMMUNICATIONS
	COMP	COMPUTER
	COND	CONDUCTOR
	CONTR	CONTRACTOR
	CONT	CONTACTOR
	COR	CONTRACTING OFFICER'S REPRESENTATIVE
	CP	CONDENSING WATER PUMP
	CONV	CONVENIENCE
	CPT	CONTROL POWER TRANSFORMER
	CT	CURRENT TRANSFORMER
	CU	COPPER
D	-	-
	DB	DIRECT BURIAL
	DC	DIRECT CURRENT
	DDC	DIRECT DIGITAL CONTROL
	DDCP	DIRECT DIGITAL CONTROL PANEL
	DF	DEMAND FACTOR
	DISC	DISCONNECT
	DIST	DISTRIBUTION
	DP	DOUBLE POLE
	DPDT	DOUBLE POLE DOUBLE THROW
	DPST	DOUBLE POLE SINGLE THROW
	DS	DISCONNECT SWITCH
	DTS	DRAWN TO SCALE
	DWG	DRAWING
E	-	-
	<E>	EXISTING TO REMAIN
	EES	EARTH ELECTRODE SYSTEM
	EF	EXHAUST FAN
	EG, E/G	ENGINE GENERATOR
	ELEV	ELEVATION
	EMER	EMERGENCY
	EMH	ELECTRICAL MANHOLE
	EMT	ELECTRICAL METALLIC TUBING
	ENCL	ENCLOSURE
	EO	ELECTRICALLY OPERATED
	EOL	END-OF-LINE RESISTOR
	EPMS	ELECTRICAL POWER MONITORING SYSTEM
	EPO	EMERGENCY POWER OFF
	EQUIP	EQUIPMENT
	ERMS	ENVIRONMENTAL REMOTE MONITORING SYSTEM
	EST	ESTIMATE
	EWC	ELECTRIC WATER COOLER
	EWH	ELECTRIC WATER HEATER
	EXT	EXTENSION
	EXP	EXPLOSION PROOF
F	-	-
	FA	FIRE ALARM
	FACP	FIRE ALARM CONTROL PANEL
	FCU	FAN COIL UNIT
	FDC	FIRE DEPARTMENT CONNECTION
	FDS	FIRE DETECTION SYSTEM
	FID	FIELD INTERFACE DEVICE
	FIXT	FIXTURE
	FLA	FULL LOAD AMPERES
	FLEX, FMC	FLEXIBLE METAL CONDUIT
	FO	FIBER OPTIC
	FP	FIRE PROTECTION, FIRE PUMP
	FPIB	FAN POWERED INDUCTION BOX
	FRE	FIBERGLASS REINFORCED EPOXY
	FTI	FAA TELECOMMUNICATIONS INFRASTRUCTURE
G	-	-
	GALV	GALVANIZED
	GEN	GENERATOR
	GF	GROUND FAULT
	GFE	GOVERNMENT FURNISHED EQUIPMENT
		GOVERNMENT FURNISHED CONTRACTOR INSTALLED (EQUIPMENT INSTALLATION)
	GFI	GROUND FAULT INTERRUPTER
	(GFCI)	GROUND FAULT CIRCUIT INTERRUPTER
	G, GRD, GND	GROUND
	GP	GROUND PLATE
	GRSC	HOT-DIPPED GALVANIZED RIGID STEEL CONDUIT
H	-	-
	HDD	HORIZONTAL DIRECTIONAL DRILLING
	HH	HANDHOLE
	HID	HIGH INTENSITY DISCHARGE
	HOA	HAND-OFF-AUTOMATIC
	HPS	HIGH PRESSURE SODIUM
	HV	HIGH VOLTAGE
	HWRP	HOT WATER RECIRCULATING PUMP
	HZ	HERTZ
I	-	-
	ICV	IRRIGATION CONTROL VALVE
	ILCP	INTEGRATED LIGHTING CONTROL PANEL
	IMC	INTERMEDIATE METAL CONDUIT
	INCAN	INCANDESCENT
	ISO	ISOLATED, ISOLATION
J	-	-
	J, JB	JUNCTION BOX
K	-	-
	kCMIL	THOUSAND CIRCULAR MILS
	KO	KEY OPERATED
	KV	KILOVOLT
	KVA	KILOVOLT AMPERES
	KW	KILOWATT
	KWH	KILOWATT HOURS
L	-	-
	LA	LIGHTNING ARRESTER
	LAN	LOCAL AREA NETWORK
	LDP	LEAK DETECTOR PANEL
	LED	LIGHT EMITTING DIODE
	LFMC	LIQUIDTIGHT FLEXIBLE METAL CONDUIT
	LPS	LIGHTNING PROTECTION SYSTEM
	LRA	LOCKED ROTOR AMPERES
	LTG	LIGHTING
	LV	LOW VOLTAGE
M	-	-
	M	MOTOR
	MC	MOTOR CONTROLLER
	MCA	MINIMUM CIRCUIT AMPACITY
	MCB	MAIN CIRCUIT BREAKER
	MCC	MOTOR CONTROL CENTER
	MCP	MOTOR CIRCUIT PROTECTOR
	MCS	MOLDED CASE SWITCH
	MH	MANHOLE / METAL HALIDE
	MIN	MINIMUM
	MAX	MAXIMUM
	MOCPD	MAXIMUM OVERCURRENT PROTECTION DEVICE
	MLO	MAIN LUGS ONLY
	MOM	MOMENTARY
	MPG	MAIN GROUND PLATE
	MTS	MANUAL TRANSFER SWITCH
	MVA	MEGAVOLT AMPERE
N	-	-
	N	NEUTRAL
	NAC	NOTIFICATION APPLIANCE CIRCUIT
	NC	NORMALLY CLOSED
	NEC	NATIONAL ELECTRICAL CODE
	NEMA	NATIONAL ELECTRIC MANUFACTURERS
	NF	NON-FUSED
	NO	NORMALLY OPEN / NUMBER
	NP	NOT PERMITTED
	NTS	NOT TO SCALE
O	-	-
	OCPD	OVERCURRENT PROTECTION DEVICE
	OL	OVERLOAD
	OSP	OUTSIDE PLANT FIBER CABLE
P	-	-
	P	POLE
	PA	PUBLIC ADDRESS
	PB	PULLBOX
	PC	PHOTO CELL
	PF	POWER FACTOR
	PH	PHASE
	PNL	PANEL
	POC	POINT OF CONNECTION
	PQM	POWER QUALITY METER
	PRI	PRIMARY
	PS	PANEL SCHEDULE
	PSS	PANIC SHUTDOWN SYSTEM
	PT	POTENTIAL TRANSFORMER
	PV	PHOTOVOLTAIC
	PVC	POLYVINYL CHLORIDE
	PWR	POWER
	PTZ	PAN-TILT-ZOOM
Q	-	-
	QTY	QUANTITY
R	-	-
	REC	RECEPTACLE
	RF	RETURN FAN
	RFI	RADIO FREQUENCY INTERFERENCE
	RGS	RIGID GALVANIZED STEEL CONDUIT
	RMS	ROOT MEAN SQUARE
S	-	-
	SEC	SECONDARY
	SEP	SEPARATE
	SERV	SERVICE
	SF	SUPPLY FAN
	SHT	SHEET
	SN	SOLID NEUTRAL
	SQFT	SQUARE FOOT
	SP	SMOKE PARTITION
	SPD	SURGE PROTECTIVE DEVICE
	SPST	SINGLE POLE SINGLE THROW
	SPF	STAIR PRESSURIZATION FAN
	STR	STARTER
	STS	STATIC TRANSFER SWITCH
	SW	SWITCH
	SWBD	SWITCHBOARD
	SWGR	SWITCHGEAR
	SYM	SYMMETRICAL
T	-	-
	T	TIMER / TRIP / TRANSFORMER
	TACAN	TACTICAL AIR NAVIGATION
	TB	TERMINAL BLOCK
	TC	TELEPHONE CONDUIT
	TELCO	TELEPHONE COMPANY
	TELEC	TELECOMMUNICATIONS
	TEMP	TEMPERATURE / TEMPORARY
	THW	THERMOPLASTIC WIRE
	TMH	TELECOMMUNICATIONS MANHOLE
	TOS	TOP OF SLAB
	TP	TWISTED PAIR
	TPS	TWISTED PAIR SHIELDED
	TTB	TELEPHONE TERMINAL BOARD
	TTC	TELEPHONE TERMINAL CABINET
	TV	TELEVISION
	TVSS	TRANSIENT VOLTAGE SURGE SUPPESSION
	TYP	TYPICAL
U	-	-
	UC	UNDER COUNTER
	UG	UNDERGROUND
	UL	UNDERWRITERS LABORATORY
	UPS	UNITERRUPTIBLE POWER SUPPLY
	UON	UNLESS OTHERWISE NOTED
	UH	UNIT HEATER
V	-	-
	V	VOLT
	VA	VOLT AMPERES
	VAV	VARIABLE AIR VOLUME
	VAVT	VAV TRANSFORMER
	VFD	VARIABLE FREQUENCY DRIVE
	VID	VIDEO IDENTIFICATION
	VM	VOLT METER
	VOR	VERY HIGH FREQUENCY OMNIDIRECTION RANGE
	VRP	VEEDER ROOT PANEL
	VS	VOLT METER SWITCH
W	-	-
	W	WIRE / WATTS
	WHM	WATT HOUR METER
	WM	WATT MISER
	WP	WEATHERPROOF
	WT	WATERTIGHT
	W	WARM WHITE, WIREWAY
X	-	-
	XFMR	TRANSFORMER
Y	-	-
	Y	WYE
Z	-	-
	Z	IMPEDANCE

ELECTRICAL GENERAL NOTES

1. COMPLY WITH THE FAA STANDARD/SPECIFICATION IN EFFECT AS OF THE DATE OF THE CONTRACT DOCUMENTS AS APPLICABLE TO THE EXTENT SPECIFIED IN DIVISIONS 26 AND 27
   A. FAA-STD-019 (CURRENT EDITION): LIGHTNING AND SURGE PROTECTION, GROUNDING, BONDING AND SHIELDING REQUIREMENTS FOR FACILITIES AND ELECTRONIC EQUIPMENT
   B. FAA-C-1217H (CURRENT EDITION): ELECTRICAL WORK, PREMISES WIRING
   C. FAA-C-1391 (CURRENT EDITION):INSTALLATION, TERMINATION, SPLICING AND TRANSIENT/SURGE PROTECTION OF UNDERGROUND ELECTRICAL DISTRIBUTION SYSTEM POWER CABLES
   D. JO 3900.64A: AIR TRAFFIC ORGANIZATION ELECTRICAL SAFETY PROGRAM
   E. FAA-STD-061 (CURRENT EDITION): AIRPORT FIBER OPTIC TRANSMISSION SYSTEM
   F. FAA-E-2761 (CURRENT EDITION): CABLE, FIBER OPTIC, MULTI-MODE, AND SINGLE-MODE, MULTI-FIBER SPECIFICATION
   G. JO 6950.27B (CURRENT EDITION): POWER SYSTEM STUDIES
2. ELECTRICAL DRAWINGS ARE DIAGRAMMATICAL IN NATURE AND INDICATE THE GENERAL LOCATION OF OUTLETS, EQUIPMENT, AND BRANCH CIRCUITRY ARRANGEMENT FOR POWER SYSTEM WIRING. WHERE PRACTICAL, UP TO THREE SINGLE CIRCUIT HOME RUNS MAY BE COMBINED IN A SINGLE CONDUIT. NO MORE THAN THREE CIRCUITS MAY BE RUN IN A SINGLE CONDUIT UNLESS PROPER AMPACITY ADJUSTMENT FACTORS ARE MADE IN ACCORDANCE WITH NEC ARTICLE 310.15(B)(2) REQUIREMENTS. DO NOT COMBINE BRANCH CIRCUIT WIRING FROM DIFFERENT PANELBOARDS OR OF DIFFERENT SYSTEM VOLTAGES. PROVIDE A DEDICATED NEUTRAL AND EQUIPMENT GROUNDING CONDUCTOR FOR EACH BRANCH CIRCUIT INDICATED ON THE PLAN DRAWINGS. NEUTRAL AND EQUIPMENT GROUNDING CONDUCTORS MUST NOT BE SHARED.
3. THE DRAWINGS ARE NOT INTENDED TO BE SCALED, REFER TO THE ARCHITECTURAL DRAWINGS FOR DIMENSIONS OF BUILDING ELEMENTS.
4. SOME LEGEND SYMBOLS MIGHT NOT BE USED - SEE FLOOR PLANS FOR APPLICABLE DEVICES.
5. MOUNTING HEIGHTS INDICATED AS "+__" ARE MEASURED FROM FINISHED FLOOR TO CENTERLINE OF DEVICE UNLESS OTHERWISE NOTED.
6. OSHA COMPLIANCE (CONTRACTOR MUST PROVIDE THE FOLLOWING):
   A. SERVICES , FEEDERS, AND BRANCH CIRCUITS, AT ITS DISCONNECTING MEANS OR OVERCURRENT DEVICE, TO BE LEGIBLY MARKED TO INDICATE ITS PURPOSE. (29CFR1910.303(f)(2))
   B. ALL EQUIPMENT POWER/CONTROL DISCONNECTING MEANS DEVICES TO BE CAPABLE OF ACCEPTING LOCKOUT/TAG OUT EQUIPMENT DESIGNED TO ALLOW ENERGY SOURCE ISOLATION AS NECESSARY TO FACILITATE EQUIPMENT MAINTENANCE OR REPLACEMENT. (29CFR1910 .147(c)(2)(iii))
   C. WORKING CLEARANCES AROUND ELECTRICAL EQUIPMENT MUST BE MAINTAINED AS PER OSHA REGULATIONS. (29CFR1910.403(i)(1)(i))
   D. CONTRACTOR TO PROVIDE AN ARC FLASH HAZARD ANALYSIS AND ELECTRICAL EQUIPMENT ARC FLASH HAZARD LABELING. INDICATE ARC FLASH HAZARD LABELS; THE NOMINAL SYSTEM VOLTAGE, ARC FLASH BOUNDARY, AVAILABLE INCIDENT ENERGY, AND CORRESPONDING WORKING DISTANCE.
7. UPON COMPLETION OF THE BUILDING ELECTRICAL DISTRIBUTION SYSTEM, WHEN FAA SYSTEMS ARE INSTALLED, ONLY FAA PERSONNEL MAY OPERATE CIRCUIT BREAKERS. CONTRACTOR MUST REQUEST PERMISSION FROM FAA COR AT LEAST 10 WORKING DAYS IN ADVANCE AND IN WRITING FOR EACH CASE OF BREAKER OPERATION. CONTRACTOR MUST NOT OPEN (DE-ENERGIZE) OR CLOSE (ENERGIZE) ANY CIRCUIT BREAKER AT ANY TIME.
8. COORDINATE ELECTRICAL WORK WITH WORK SHOWN ON ARCHITECTURAL AND MECHANICAL DRAWINGS.

WIRING/EQUIPMENT GENERAL NOTES

1. RACEWAY INSTALLATION: DRAWINGS DO NOT NECESSARILY INDICATE ACTUAL RACEWAY ROUTING. WHERE CONDUIT PATHWAYS ARE SHOWN, THEY INDICATE THE INTENDED ROUTING LOCATION. CONTRACTOR TO DETERMINE THE LOCATION OF ALL PATHWAYS BY FIELD MEASUREMENT. CONTRACTOR IS RESPONSIBLE FOR COORDINATION OF THE WORK WITH OTHER TRADES. SIMPLIFY INSTALLATION WHEREVER POSSIBLE, BUT SUBJECT TO APPROVAL BY THE COR, FOR VISUAL AND STRUCTURAL REASONS. IT IS NOT WITHIN THE SCOPE OF THE DRAWINGS TO SHOW ALL NECESSARY OFFSETS, BENDS, PULL BOXES AND OBSTRUCTIONS. INSTALL RACEWAYS LEVEL, PLUMB, AND PARALLEL AND PERPENDICULAR TO OTHER BUILDING SYSTEMS AND COMPONENTS, EXCEPT WHERE OTHERWISE INDICATED.
2. PROVIDE GROUND FAULT INTERRUPTING (GFI) TYPE RECEPTACLES WITHIN SIX FEET IN ANY DIRECTION OF A SINK OR OTHER SOURCE OF WATER.
3. ALL CONDUITS THAT PENETRATE THE WALL NEED TO HAVE EXPANSION FITTINGS.
4. PROVIDE AND LOCATE OUTLETS, WIRING, AND CONTROLS, AS INDICATED OR REQUIRED FOR EQUIPMENT FURNISHED UNDER OTHER SECTIONS OR PER EQUIPMENT SUPPLIER'S REQUIREMENT. MAKE ALL NECESSARY CONNECTIONS TO EQUIPMENT AND ASSOCIATED CONTROLS UNLESS OTHERWISE DIRECTED BY THE COR. VERIFY EQUIPMENT LOCATION, AND ELECTRICAL CHARACTERISTICS TO BE FURNISHED AND/OR INSTALLED. REFER TO THE EQUIPMENT OR SYSTEM SPECIFICATIONS AND PLAN DRAWINGS TO DETERMINE THE SCOPE OF WORK REQUIRED.
5. WHERE MOTOR STARTERS AND VFD EQUIPMENT ARE REQUIRED BY THE PLAN DRAWINGS, PROVIDE COMPONENTS AND ACCESSORIES AS INDICATED IN THE PROJECT SPECIFICATIONS BASED UPON THE EQUIPMENT MOTOR HORSEPOWER AND VOLTAGE RATINGS INDICATED ON THE PLAN DRAWINGS.
6. FIRESTOP CONDUIT PENETRATIONS THROUGH FLOORS AND FIRE RATED WALLS. MATERIALS AND METHODS EMPLOYED IN FIRESTOPPING MUST BE IN ACCORDANCE WITH UL STANDARDS. LEAVE NO OPENINGS IN FIRE RATED ASSEMBLIES OPEN OVERNIGHT, OR PAST THE WORK SHIFT. TEMPORARILY FIRESTOP THESE OPENINGS IF NECESSARY. REFER TO ARCHITECTURAL DRAWINGS FOR LOCATIONS OF FIRE RATED WALLS.
7. ELECTRICAL EQUIPMENT SUPPORT SYSTEMS MUST BE INSTALLED TO WITHSTAND THE IBC SEISMIC DESIGN CATEGORY PER PROJECT SPECIFICATIONS.
8. CONTRACTOR MUST ADEQUATELY PROTECT CONDUITS AND CONDUCTORS FROM ALL PHYSICAL DAMAGE, INCLUDING OUTDOOR EXPOSURE, AS APPLICABLE. WHERE NEEDED, INSTALL APPROPRIATE TEMPORARY JUNCTION BOXES AS DIRECTED BY THE COR.
9. ALL ELECTRICAL CONDUCTORS MUST BE TESTED. TESTING MUST BE DONE PHASE TO PHASE AND PHASE TO GROUND WITH A 500V DC INSULATION RESISTANCE TESTER FOR AT LEAST 1 MINUTE AFTER METER READINGS HAVE STABILIZED PER FAA SPECIFICATION 1217 (LATEST EDITION). THE MEGOHMMETER READINGS MUST BE TAKEN, RECORDED AND SUBMITTED TO COR AS PER SPECIFICATIONS. ALL TESTING OF THE CONDUCTORS MUST BE WITNESSED BY THE COR, WITHOUT EXCEPTION. THE COR MUST SIGN THE FIELD REPORT OF MEGOHMMETER READINGS. CONDUCTORS THAT TEST LESS THAN 50 MEGAOHMS MUST BE REPLACED.
10. SPLICES MUST BE MADE ONLY AT OUTLETS, JUNCTION BOXES OR ACCESSIBLE RACEWAYS IN ACCORDANCE WITH FAA SPECIFICATION 1217. SPLICING OF UNGROUNDED CONDUCTORS IN PANELBOARDS IS NOT PERMITTED. SPLICES MUST BE MADE WITH SOLDERLESS CONNECTORS CONFORMING TO UL 486A, UL 486C, AND UL 486E. INSULATED WIRE NUTS MAY ONLY BE USED TO SPLICE CONDUCTORS SIZED NO. 10 AWG AND SMALLER. COMPRESSION CONNECTORS MUST BE USED TO SPLICE CONDUCTORS NO. 8 AWG AND LARGER. ALL SPLICES, INCLUDING THOSE MADE WITH INSULATED WIRE NUTS, MUST BE INSULATED WITH ELECTRICAL TAPE OR SHRINK TUBING TO A LEVEL EQUAL TO THAT OF THE FACTORY INSULATED CONDUCTORS. SPLICING OF FEEDERS AND ANTENNA CABLES IS NOT ALLOWED.
11. ALL SAFETY DISCONNECT SWITCHES MUST BE HEAVY DUTY RATED WITH ENCLOSURES RATED FOR THE APPLICATION.
12. STAINLESS STEEL LIQUIDTIGHT FLEXIBLE CONDUIT MUST BE USED FOR ALL EXTERIOR LIQUIDTIGHT FLEXIBLE CONDUIT.
13. ADJUST WIRE SIZES FOR EXTERIOR CIRCUITS IN ACCORDANCE WITH NEC SECTION 310.15 (B).
14. CONDUIT LAYOUTS SHOWN FOR ELECTRONIC EQUIPMENT CONNECTIONS WERE PROVIDED BY FAA INSTALLERS AND IS ILLUSTRATIVE. CONTRACTOR IS REQURIED TO PREPARE A SET OF COORDINATION DRAWINGS FOR FAA REVIEW AND APPROVAL PRIOR TO INSTALLATION DRAWINGS. COORDINATION DRAWINGS MUST BE PREPARED IN ACCORDANCE WITH SPECIFICATION 01 31 00 SECTION 1.8.
15. ADJUST WIRE SIZES TO COMPENSATE FOR VOLTAGE DROP. THE LENGTH OF A SINGLE PHASE 20A CIRCUIT (ONE-WAY) MUST NOT EXCEED THE FOLLOWING VALUES (BASED ON 16A LOAD):

CONDUCTOR SIZE (AWG)	MAXIMUM 120V CIRCUIT LENGTH
#12	60'-0"
#10	90'-0"
#8	140'-0"
#6	225'-0"

LIGHTNING PROTECTION GENERAL NOTES

1. PROVIDE AN EARTH ELECTRODE SYSTEM (EES), GROUNDING AND LIGHTNING PROTECTION SYSTEM (LPS) IN ACCORDANCE WITH THE NEC, NFPA 780 AND FAA-STD-019 (LATEST EDITION). THE LIGHTNING PROTECTION SYSTEM MUST BE PROVIDED IN ACCORDANCE WITH UL STANDARD 96A.
2. ALL EXPOSED METALLIC BODIES, SUCH AS EQUIPMENT ENCLOSURES, MECHANICAL PIPING, HVAC DUCTWORK, AND STAIR RAIL ASSEMBLIES MUST BE BONDED TO THE LIGHTNING PROTECTION SYSTEM.
3. PROVIDE CLASS II GRADE SYSTEM COMPONENTS IN ACCORDANCE WITH FAA-STD-019 (LATEST EDITION) REQUIREMENTS FOR CLASS II SYSTEM INSTALLATIONS.
4. PROVIDE COMMON BONDING OF BUILDING METAL PARTS WHERE REQUIRED PER FAA-STD-019 (LATEST EDITION). BUILDING STEEL, METAL ROOFING, METAL SUPPORTING STRUCTURES, CONCRETE REINFORCING STEEL, SIDING, LADDERS, DUCT, AND SIMILAR METAL PARTS ARE NOT TO BE USED AS SUBSTITUTES FOR ROOF OR DOWN CONDUCTORS.

CORROSION PROTECTION GENERAL NOTES

1. ALL BONDS MUST BE PROTECTED AGAINST WEATHER, CORROSIVE ATMOSPHERES, VIBRATION, AND MECHANICAL DAMAGE. UNDER DRY CONDITIONS, APPLY A COMPATIBLE CORROSION PREVENTIVE OR SEALANT WITHIN 24 HOURS OF ASSEMBLY OF THE BOND MATERIALS. UNDER CONDITIONS EXCEEDING 60 PERCENT HUMIDITY, SEAL THE BOND WITH A COMPATIBLE CORROSION PREVENTIVE OR SEALANT WITHIN 1 HOUR OF JOINING.

   EXTERIOR BONDS MUST BE PROTECTED AGAINST CORROSION. INTERIOR BONDS EXPOSED TO MOISTURE OR HIGH HUMIDITY MUST BE PROTECTED AGAINST CORROSION.

   A. SEALING TREATMENT FOR CORROSION PROTECTION: CORROSION PROTECTION MUST BE PROVIDED BY SEALING THE BOND CONNECTION WITH A MOISTUREPROOF PAINT CONFORMING TO FAA-STD-012 OR WITH A SILICONE OR PETROLEUM BASED SEALANT TO PREVENT MOISTURE FROM REACHING THE BONDING AREA. BONDS PROTECTED BY CONDUCTIVE FINISHES SUCH AS ALODINE AND IRIDITE MUST NOT REQUIRE PAINTING TO MEET THE REQUIREMENTS OF THIS STANDARD.
   B. COMPRESSION BONDS IN CLIMATICALLY PROTECTED AREAS: SEALING IS NOT REQUIRED FOR COMPRESSION BONDS BETWEEN COPPER CONDUCTORS OR COMPATIBLE ALUMINUM ALLOYS THAT ARE LOCATED IN READILY ACCESSIBLE AREAS THAT ARE NOT EXPOSED TO MOISTURE, CORROSIVE FUMES, OR EXCESSIVE DUST.
   C. PAINTED FINISHES: IF A PAINT FINISH TREATMENT IS REQUIRED ON THE FINAL ASSEMBLY, THEN THE BOND MUST BE SEALED IN ACCORDANCE WITH THE MANUFACTURER'S RECOMMENDATION. TO ENSURE THE BOND IS COMPLETELY SEALED AGAINST MOISTURE, A WATERPROOF TYPE OF PAINT OR PRIMER MUST BE USED IF THE RECOMMENDED FINISH TREATMENT IS NOT WATERPROOF.

DELEGATED DESIGN

1. DELEGATED DESIGN ITEMS ARE DEFINED AS THOSE PORTIONS OF THE ELECTRICAL DISTRIBUTION SYSTEM REQUIRING CONSTRUCTION OF MECHANICAL/STRUCTURAL SUPPORTING SYSTEMS FOR ELECTRICAL EQUIPMENT. REFER TO SPECIFICATION SECTION 26 05 48.16 FOR DELEGATED DESIGN SUBMITTAL REQUIREMENTS.
2. THE DELEGATED DESIGN ITEMS MUST NOT BE FABRICATED OR INSTALLED UNITL THE SUBMITTAL DOCUMENTS HAVE BEEN REVIEWED AND APPROVED BY THE COR.
3. DELEGATED DESIGN ITEMS FOR WHICH SUBMITTAL PRODUCT, DRAWINGS, AND CALCULATIONS ARE REQUIRED INCLUDE THE FOLLOWING:
   A. VOR PLATFORM AND FACILITIES: PROVIDE HANGER, SUPPORT, AND METAL FRAMING ASSEMBLIES FOR ELECTRICAL EQUIPMENT, CONDUIT, AND EQUIPMENT METAL FRAMING RACK ASSEMBLIES.
   B. POWER AND TELECOMM SERVICE CONNECTIONS: PROVIDE STRUCTURAL METAL FRAMING SYSTEM TO SUPPORT THE POWER/TELECOM CONDUIT RISERS EXTENDING BETWEEN THE VOR MAT FOUNDATION AND PLATFORM LEVEL STRUCTURE.
   C. UTILITY TRANSFORMER: PROVIDE ELECTRICAL INFRASTRUCTURE AND PAD ASSEMBLIES FOR THE TRANSFORMER INSTALLATION IN ACCORDANCE WITH THE UTILITY (ENTERGY) REQUIREMENTS.
   D. LIGHTNING PROTECTION (LP) AND GROUNDING SYSTEM: PROVIDE MOUNTING PLATE ASSEMBLIES TO SUPPORT CONDUIT PATHWAYS FOR THE GROUNDING AND LP DOWN CONDUCTOR ROUTING PATHWAYS ALONG THE VOR PLATFORM COLUMNS.
   E. ENGINE-GENERATOR (E/G): PROVIDE SKID FRAME MOUNTING AND VIBRATION ATTACHMENT TO THE SHELTER ENCLOSURE FLOOR SLAB.
   F. E/G EXHAUST STACK PIPING: PROVIDE STRUCTURAL MOUNTING AND SUPPORT ASSEMBLIES.
   G. ELECTRICAL EQUIPMENT: PROVIDE HANGER, SUPPORT, AND MOUNTING ASSEMBLIES FOR ELECTRICAL INFRASTRUCTURE AND TELECOM CABLE TRAY SYSTEM.
   H. EQUIPMENT ROOM 001 BATTERY SYSTEM EQUIPMENT RACK SUPPORT AND MOUNTING.

FOR OFFICIAL USE ONLY
PUBLIC AVAILABILITY TO BE DETERMINED UNDER 5 USC 552

COMMONWEALTH OF VIRGINIA
MATHIAS M. BECKER
LIC. NO. 029564
9/12/2025
PROFESSIONAL ENGINEER

JACOBS
1100 N GLEBE RD.
SUITE 500
ARLINGTON, VA 22201

REV.	APPROVED DATE	DESCRIPTION	JCN	REDLINE DATE	APVD

Jacobs

DEPARTMENT OF TRANSPORTATION
FEDERAL AVIATION ADMINISTRATION
CENTRAL SERVICE REGION — FT WORTH, TX

LEEVILLE (LEV) VORTAC REPLACEMENT

ELECTRICAL GENERAL NOTES AND ABBREVIATIONS

GRAND ISLE — LEEVILLE (LEV) VORTAC — LA

REVIEWED BY	SUBMITTED BY	APPROVED BY
	SUBMITTER'S TITLE	APPROVER'S TITLE

LEEVILLE VORTAC
GRAND ISLE LOUISIANA

DESIGNED BY D. RUSTAMOVA	ISSUED BY ENGINEERING SERVICES TERMINAL	DATE 9/12/2025	JCN: 1508914
DRAWN BY D. RUSTAMOVA		DRAWING NO. LEV - D - VORTAC - E001	REV.
CHECKED BY M. BECKER			

PLOT DATE/TIME: 9/10/2025 4:01:39 PM

WIRING DEVICE LEGEND

+48"	DENOTES THE MOUNTING HEIGHT IN INCHES ABOVE THE FINISHED FLOOR.
A	ARC FAULT CIRCUIT INTERRUPTER
EWC	ELECTRIC WATER COOLER
GFI	GFCI TYPE, WIRED FOR GFCI TRIP FOR DESIGNATED RECEPTACLE ONLY (NON-FEED-THRU INSTALLATION)
IG	ISOLATED GROUNDING TYPE RECEPTACLE
TR	TAMPER RESISTANT TYPE RECEPTACLE
WP	WEATHER-RESISTANT, WEATHERPROOF WITH HINGED COVER
WP-WIN	WEATHER-RESISTANT TYPE, WEATHERPROOF WITH WHILE-IN-USE COVER
XP	EXPLOSION PROOF TYPE, RATED FOR AREA CLASSIFICATION IN WHICH IT IS INSTALLED.
	DUPLEX RECPTACLE. UNLESS INDICATED OTHERWISE, RECEPTACLES ARE FLUSH MOUNTED, 20A,125V, 1PH, 2P, 3W, NEMA 5-20R.
	DUPLEX RECPTACLE. UNLESS INDICATED OTHERWISE, RECEPTACLES ARE FLUSH MOUNTED, 20A,125V, 1PH, 2P, 3W, NEMA 5-20R, MOUNTED 6" ABOVE COUNTERTOP OR BACKSPLASH UNLESS OTHERWISE NOTED.
	DUPLEX RECPTACLE. UNLESS INDICATED OTHERWISE, RECEPTACLES ARE FLUSH MOUNTED, 20A,125V, 1PH, 2P, 3W, NEMA 5-20R ON AN EMERGENCY CIRCUIT.
	SPLIT YOKE DUPLEX RECPTACLE WITH TOP BEING CONTROLLED. UNLESS INDICATED OTHERWISE, RECEPTACLES ARE FLUSH MOUNTED, 20A,125V, 1PH, 2P, 3W, NEMA 5-20R. UTILIZE VACANCY / OCCUPANCY SENSOR SERVING THE ROOM UNLESS OTHERWISE NOTED. PROVIDE PLUG LOAD CONTROLLER FOR EACH ROOM SERVED.
	TWO DUPLEX (QUAD) RECEPTACLES. UNLESS INDICATED OTHERWISE, RECEPTACES ARE FLUSH MOUNTED, 20A, 125V, 1PH, 2P, 3W, NEMA 5-20R.
	SWITCHED TWO DUPLEX (QUAD) RECEPTACLES. QUAD RECEPTACLES HAVE CONTROLLED AND NON-CONTROLLED OUTLETS FED FROM THE SAME CIRCUIT, BUT A SPLIT YOKE IS NOT REQUIRED. UNLESS INDICATED OTHERWISE, RECEPTACES ARE FLUSH MOUNTED, 20A, 125V, 1PH, 2P, 3W, NEMA 5-20R. UTILIZE VACANCY / OCCUPANCY SENSOR SERVING THE ROOM UNLESS OTHERWISE NOTED. PROVIDE PLUG LOAD CONTROLLER FOR EACH ROOM SERVED.
	SIMPLEX RECEPTACLE. UNLESS INDICATED OTHERWISE, RECEPTACLES ARE FLUSH MOUNTED, 20A,125V,1PH, 2P, 3W, NEMA 5-20R.
	SPECIAL PURPOSE RECEPTACLE, UNLESS INDICATED OTHERWISE, RECEPTACLES ARE FLUSH MOUNTED. RECEPTACLE NEMA TYPES INDICATED ON THE SPECIAL RECEPTACLE SCHEDULE.
	SURFACE MOUNTED RECEPTACLE
JB	JUNCTION BOX FOR ELECTRICAL EQUIPMENT CONNECTION
1	NUMERAL = CIRCUIT NUMBER
+36"	+(INCHES) = HEIGHT IN INCHES ABOVE FINISHED FLOOR
WP GFI	CAPITAL LETTER(S) = SPECIAL DESIGNATOR SUBSCRIPT DEFINED ABOVE
P	POWER POLE WITH FOUR RECEPTACLES, LENGTH AS REQUIRED TO EXTEND TO CEILING; SHADED AREA DENOTES TELECOMMUNICATION RACEWAY.

ELECTRICAL DISTRIBUTION EQUIPMENT SYMBOLS

	FLOOR OR SURFACE MOUNTED 208V PANELBOARD
	FLOOR OR SURFACE MOUNTED 480V PANELBOARD
T75	GENERAL PURPOSE, DRY TYPE TRANSFORMER. 'T75' IS THE KVA RATING FOR THE TRANSFORMER. IN THIS EXAMPLE, 'T75' REPRESENTS A TRANSFORMER RATED 75KVA.
ATS	AUTOMATIC TRANSFER SWITCH.
SPD	SURGE PROTECTIVE DEVICE
5	MOTOR CONNECTION
	SINGLE POINT CONNECTION FOR PACKAGED EQUIPMENT
	COMBINATION MOTOR STARTER / DISCONNECT
	MOTOR STARTER
	FUSED DISCONNECT
	NON FUSED DISCONNECT
VFD	VARIABLE FREQUENCY DEVICE
	ELECTRICAL MANHOLE
	ELECTRICAL EQUIPMENT WITH NEC MINIMUM REQUIRED WORKING SPACE

SINGLE LINE DIAGRAM LEGEND

LSIG 225 A	LOW VOLTAGE MOLDED CASE CIRCUIT BREAKER.
T-PD2A 30KVA 480 V- 208/120 V	TRANSFORMER.
	DOUBLE THROW SAFETY DISCONNECT SWITCH
100A/3P	PANELBOARD
	TRANSFER SWITCH. 'ATS' DENOTES AUTOMATIC TRANSFER SWITCH
	BATTERY
DM	DIGITAL METER
	GROUNDING CONNECTION
13Y	FEEDER / BRANCH CIRCUIT CIRCUITRY. IN THIS EXAMPLE, '13Y' REFERS TO THE SYMBOL COLUMN OF THE FEEDER/BRANCH CIRCUIT SCHEDULE. THE ASSOCIATED SYMBOL DESIGNATION DENOTES THE FEEDER / BRANCH CIRCUIT REQUIREMENTS FOR THE ITEM TAGGED.
SPD	SURGE PROTECTIVE DEVICE.
N.C. 600 A	LOAD INTERRUPTER SWITCH.
N.C. 30A/3P	NON-FUSED DISCONNECT / SAFETY SWITCH.
N.C. 30A/3P F-30A	FUSED DISCONNECT / SAFETY SWITCH.
E	ENGINE
G	GENERATOR
GFP	GROUND FAULT PROTECTION
	LOADBANK.
	FUSE
R1	RELAY
60A/3P	IN THIS EXAMPLE. DENOTES 60 AMPERES / 3 POLE.
F-30A	IN THIS EXAMPLE, DENOTES FUSED WITH 30 AMPERE FUSES.
F-MFR	DENOTES FUSE RATING IN ACCORDANCE WITH MANUFACTURER'S INSTRUCTIONS FOR THE UTILIZATION EQUIPMENT PROTECTED BY THE FUSES.
N3R	IN THIS EXAMPLE, DENOTES NEMA 3R ENCLOSURE.
SN	DENOTES SOLID NEUTRAL.
N.C.	DENOTES NORMALLY CLOSED.
N.O.	DENOTES NORMALLY OPEN.
LSIG 800 A	DEVICE ADJUSTABLE PROTECTION OPTIONS. LONG, SHORT, INSTANTANEOUS, AND GROUND PICKUPS IN THIS EXAMPLE.
	"AF" DENOTES FRAME SIZE, "AT" DENOTES TRIP SETTING. 1600A FRAME WITH 800A TRIP IN THIS EXAMPLE.
30A/3P	DENOTES SWITCH SIZE AND POLES. 30A, 3-POLE SWITCH IN THIS EXAMPLE.
N.C.	DENOTES ORIENTATION OF SWITCH. NORMALLY CLOSED IN THIS EXAMPLE.
(3) F-30A	DENOTES QUANTITY AND RATING OF FUSES. THREE 30A IN THIS EXAMPLE.

LIGHTING CONTROL DEVICE LEGEND

K	KEYED SWITCH
3	THREE WAY
4	FOUR WAY
3K	THREE WAY KEYED SWITCH
4K	FOUR WAY KEYED SWITCH
D	WALL DIMMER
XP	EXPLOSION PROOF
V	VACANCY SENSOR/SWITCH
VD	VACANCY SENSOR/DIMMER
O	OCCUPANCY SENSOR/SWITCH
OD	OCCUPANCY SENSOR/DIMMER
MC	3 POSITION, MOMENTARY CONTACT WITH CENTER OFF
WP	WEATHERPROOF
M	SURFACE MOUNTED MOTOR RATED WITH OVERLOAD ELEMENTS, CONTINOUS CURRENT RATING AND QUANTITY OF POLES AS REQUIRED FOR EQUIPMENT SERVED.
T	ADJUSTABLE TIMER SWITCH
PL	ILLUMINATED SWITCH (WHEN OFF)
$	RECESSED WALL MOUNTED SWITCH. INSTALL ADJACENT DEVICES UNDER COMMON FACEPLATE, FOUR DEVICES MAXIMUM PER FACEPLATE. EVENLY DIVIDE DEVICES INTO SEPARATE GROUPS WHERE ADJCENT DEVICES EXCEEDS FOUR.
$	SURFACE WALL MOUNTED SWITCH. INSTALL ADJACENT DEVICES UNDER COMMON FACEPLATE, FOUR DEVICES MAXIMUM PER FACEPLATE. EVENLY DIVIDE DEVICES INTO SEPARATE GROUPS WHERE ADJCENT DEVICES EXCEEDS FOUR.
P	PHOTO SENSOR
$3a	LIGHTING CONTROL DEVICE IDENTIFICATION (TYPICAL FOR ALL LIGHTING CONTROL DEVICE SYMBOLS WHERE USED)
	LOWERCASE LETTER(S) = CONTROL ZONE
	CAPITAL LETTER(S) AND/OR NUMERAL = SPECIAL DESIGNATOR SUBSCRIPT DEFINED ABOVE

GROUNDING AND LIGHTNING PROTECTION

—G— G —G —G—	GROUNDING CONDUCTOR.
	GROUND ROD.
	GROUND ROD IN INSPECTION WELL.
	GROUND CONNECTION TO BUILDING STEEL OR EQUIPMENT / VESSEL.
	GROUND BAR.
BGA	BARREL GROUNDING BAR ASSEMBLY; MOUNTED 5'-0" AFF.
—LPS——LPS—	MAIN LIGHTNING PROTECTION CONDUCTOR
	LIGHTNING PROTECTION AIR TERMINAL.
	LIGHTNING PROTECTION DOWN CONDUCTOR.

LUMINAIRE LEGEND

	4' SURFACE MOUNTED LUMINAIRE
	4' SURFACE MOUTED LUMINAIRE CONNECTED TO EMERGENCY LIGHTING INVERTER SYSTEM
	SITE POLE LUMINAIRE WITH CONCRETE FOOTING. NUMBERS OF LAMP HEADS AS INDICATED IN LIGHTING FIXTURE SCHEDULE. SEE LUMINAIRE ANCILLARIES BELOW FOR ADDITIONAL REQUIREMENTS.
	WALL MOUNTED EGRESS LIGHT. MOUNT 8'-0" ABOVE FINISHED FLOOR, UNLESS INDICATED OTHERWISE. NUMBERS OF LAMP HEADS AS INDICATED IN LIGHTING FIXTURE SCHEDULE.
	WALL MOUNTED REMOTE LAMP HEAD EMERGENCY LIGHT. MOUNT 8'-0" ABOVE FINISHED FLOOR, UNLESS INDICATED OTHERWISE. NUMBERS OF LAMP HEADS AS INDICATED IN LIGHTING FIXTURE SCHEDULE.
	PENDANT OR CEILING MOUNTED ILLUMINATED EGRESS EXIT SIGN. WHERE USED, DIRECTIONAL ARROWS AS INDICATED. MOUNT 8'-0" ABOVE FINISHED FLOOR, UNLESS INDICATED OTHERWISE.
	WALL MOUNTED ILLUMINATED EGRESS EXIT SIGN. WHERE USED, DIRECTIONAL ARROWS AS INDICATED. MOUNTED 8'-0" AFF UNLESS INDICATED OTHERWISE .
3	NUMERAL = CIRCUIT NUMBER
A1 a	LOWERCASE ALPHANUMERIC CHARACTER = LIGHTING SWITCH OR CONTROL ZONE
	ALPHANUMERIC TAG = LUMINAIRE TAG; COORDINATE WITH LIGHTING FIXTURE SCHEDULE

ELECTRICAL EQUIPMENT NOMENCLATURE

POWER SOURCE / DISTRIBUTION SYSTEM DESIGNATIONS

UTL	SITE INCOMING FACILITY POWER SOURCE
SE	SERVICE ENTRANCE
G	GENERATOR POWER
N	NORMAL POWER

POWER DISTRIBUTION EQUIPMENT TYPE DESIGNATIONS

ATS	AUTOMATIC TRANSFER SWITCH
EGDS	ENGINE-GENERATOR DISCONNECT SWITCH
SPD	SURGE PROTECTIVE DEVICE
MTS	MANUAL TRANSFER SWITCH
MDP	MAIN DISTRIBUTION PANELBOARD
E/G	STANDBY ENGINE-GENERATOR
T	TRANSFORMER
PNL	BRANCH CIRCUIT PANELBOARD

DISTRIBUTION SYSTEM / EQUIPMENT VOLTAGE DESIGNATIONS

MV	MEDIUM VOLTAGE (12470 VOLTS)
H	480V OR 480Y/277V
L	208V OR 208Y/120V

DISTRIBUTION PANELBOARD:

MDP	MAIN DISTRIBUTION PANELBOARD VOLTAGE (208Y/120V)

BRANCH PANELBOARD:

PNL A	PANELBOARD VOLTAGE (208Y/120V) LOCATED IN EQUIPMENT ROOM
PNL A1	PANELBOARD VOLTAGE (208Y/120V) LOCATED IN EQUIPMENT ROOM
PNL E/G	PANELBOARD VOLTAGE (208Y/120V) LOCATED IN ENGINE-GENERATOR ROOM

ADJUSTABLE PROTECTION DESIGNATIONS

L	LONG PICKUP AND TIME DELAY PROTECTION
S	SHORT PICKUP AND TIME DELAY PROTECTION
I	INSTANTANEOUS PICKUP PROTECTION
G	GROUND (EARTH) PICKUP AND TIME DELAY PROTECTION
N	NEUTRAL PROTECTION

NOTE: MULTIPLE DESIGNATIONS MAY BE ADJACENT TO DEVICE.

K	KEY INTERLOCK
ST	SHUNT TRIP
ET	ELECTRONIC TRIP

BREAKER AND FEEDER DESIGNATION BY FUNCTION

CB	CIRCUIT BREAKER
F	FEEDER DESIGNATION
FB	FEEDER BREAKER
GB	GENERATOR BREAKER
GM	GENERATOR MAIN
MB	MAIN BREAKER

(EXAMPLES)

TYPICAL CIRCUIT BREAKER DEVICE

PNLA1-FB	FEEDER BREAKER CIRCUIT BREAKER DEVICE NAME
MDP-MB	MAIN BREAKER CIRCUIT BREAKER DEVICE NAME

TYPICAL POWER FEEDER DESIGNATION

PNLA1-F	FEEDER CIRCUIT RACEWAY IDENTIFICATION NAME

WIRING SYMBOLS

——ELEC——	UNDERGROUND CONCRETE ENCASED DUCT BANK - ELECTRICAL
—TELECOM—	UNDERGROUND CONCRETE ENCASED DUCT BANK - TELECOM

FOR OFFICIAL USE ONLY

PUBLIC AVAILABILITY TO BE DETERMINED UNDER 5 USC 552

COMMONWEALTH OF VIRGINIA
MATHIAS M. BECKER
LIC. NO. 029564
9/12/2025
PROFESSIONAL ENGINEER

JACOBS
1100 N GLEBE RD.
SUITE 500
ARLINGTON, VA 22201

REV.	APPROVED DATE	DESCRIPTION	JCN	REDLINE DATE	APVD

Jacobs

DEPARTMENT OF TRANSPORTATION
FEDERAL AVIATION ADMINISTRATION
CENTRAL SERVICE REGION — FT WORTH, TX

LEEVILLE (LEV) VORTAC REPLACEMENT

ELECTRICAL SYMBOLS

GRAND ISLE — LEEVILLE (LEV) VORTAC — LA

REVIEWED BY | SUBMITTED BY | APPROVED BY

SUBMITTER'S TITLE | APPROVER'S TITLE

LEEVILLE VORTAC
GRAND ISLE LOUISIANA

DESIGNED BY D. RUSTAMOVA
DRAWN BY D. RUSTAMOVA
CHECKED BY M. BECKER
ISSUED BY ENGINEERING SERVICES TERMINAL
DATE 9/12/2025 JCN: 1508914
DRAWING NO. LEV - D - VORTAC - E002
REV.

PLOT DATE/TIME: 9/10/2025 4:01:40 PM

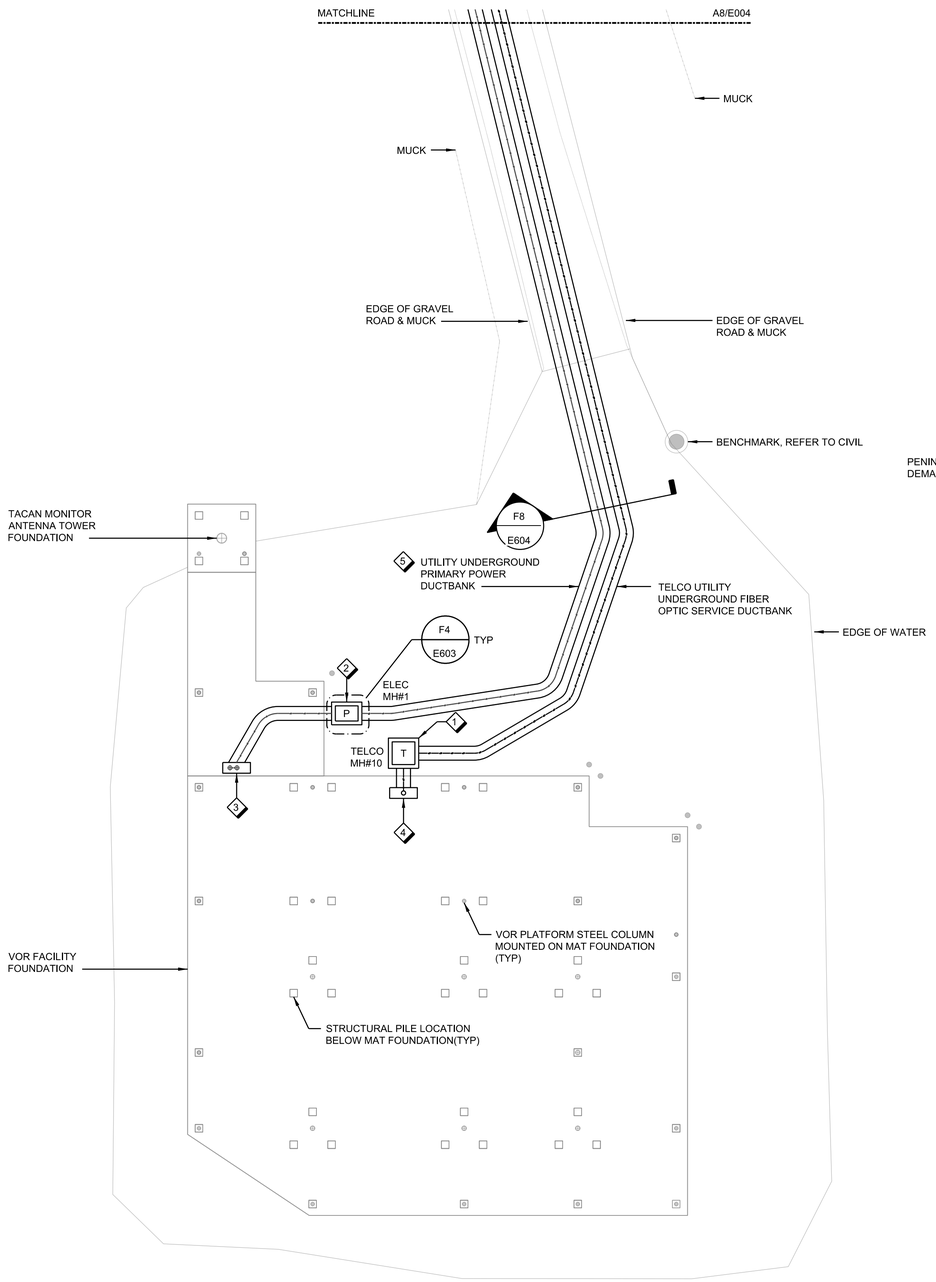

A8 / E003 SITE UTILITY PLAN - POWER AND TELCO (ZONE 1)

1" = 10'-0"

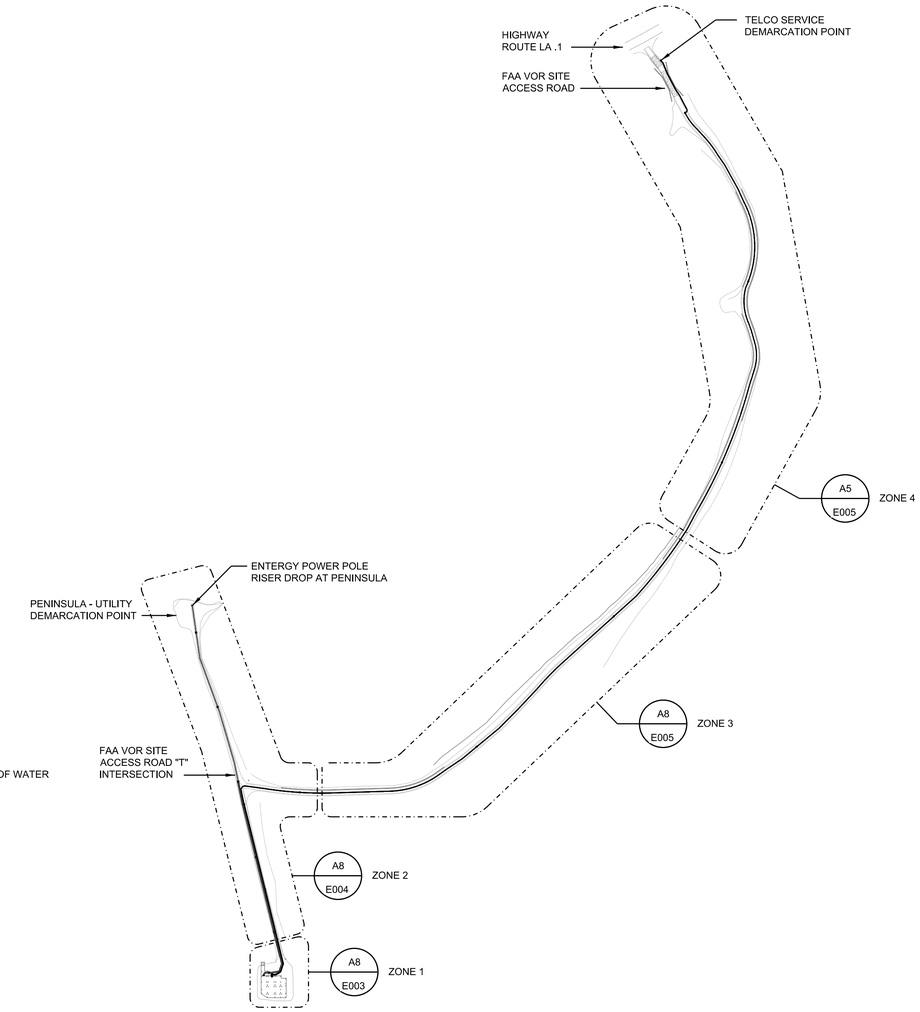

C5 / E003 SITE PLAN - ZONING KEY - OVERALL PLAN

NO SCALE:

GENERAL SHEET NOTES

A. PROVIDE POWER AND TELCO SERVICE INFRASTRUCTURE TO SUPPORT FACILITY. CONTRACTOR MUST SCHEDULE AND COORDINATE THE POWER AND TELCO SERVICES WITH THE LOCAL UTILITY COMPANY'S. CONDUIT ROUTING IS DIAGRAMMATICALLY SHOWN. CONTRACTOR TO FIELD VERIFY EXISTING CONDITION AND PROVIDE ROUTING PLAN. REFER TO DETAILS F6/E004 AND F8/E005 FOR ADDITIONAL INFORMATION.

B. ELECTRICAL POWER SERVICE INFRASTRUCTURE MUST BE INSTALLED IN ACCORDANCE WITH THE COMMERCIAL UTILITY'S (ENTERGY) CUSTOMER INSTALLATION STANDARDS FOR ELECTRICAL SERVICE (CURRENT EDITION). THE FACILITY'S ELECTRICAL SERVICE WILL ORIGINATE FROM AN ENTERGY PRIMARY CIRCUIT FEEDER LOCATED AT POLE RISER DROP CONNECTION POINT AS INDICATED ON THE DRAWINGS. THE UTILITY WILL PROVIDE THE FOLLOWING INFRASTRUCTURE:

1. PRIMARY OVERHEAD POWER LINE FEEDER AND POLE DISTRIBUTION FROM LA HIGHWAY 1 TO THE ACCESS ROAD PENINSULA.
2. PRIMARY FEEDER CONDUCTORS AND WIRING TERMINATIONS FROM PENINSULA RISER POLE TO THE FACILITY'S PAD MOUNTED TRANSFORMER.
3. SECONDARY WIRING INSTALLATION TERMINATION OF CONDUCTORS FROM THE TRANSFORMER TO ENTERGY METER CABINET. CONTRACTOR MUST PROVIDE THE SECONDARY CONDUIT PATHWAY AND FURNISH THE CONDUCTORS FOR ENTERGY WIRING INSTALLATION.
4. METERING EQUIPMENT. CONTRACTOR MUST PROVIDE AN ENTERGY APPROVED METERING CABINET ENCLOSURE.
5. WILL PROVIDE THE TRANSFORMER AND INSTALL ON A CONTRACTOR PROVIDED EQUIPMENT PAD. ENTERGY WILL INSTALL THE TRANSFORMER AND ASSOCIATED POWER/GROUNDING CIRCUITRY CONNECTIONS. CONTRACTOR MUST PROVIDE AN ENTERGY APPROVED EQUIPMENT PAD, MATERIALS, AND CRANE FOR MATERIAL HANDLING IN ACCORDANCE WITH ENTERGY'S ELECTRICAL SERVICE INSTALLATION REQUIREMENTS.
6. CONTRACTOR MUST SCHEDULE AND CLOSELY COORDINATE THE COMPLETE INSTALLATION WITH ENTERGY.

C. CONTRACTOR IS RESPONSIBLE TO PROVIDE THE FOLLOWING ITEMS FOR THE ELECTRICAL SERVICE:

1. WOOD UTILITY POLE LOCATED AT THE PENINSULA WITH POWER RISER DROP IN ACCORDANCE WITH ENTERGY REQUIREMENTS. PROVIDE CONDUIT AND POLE RISER MEASURED 7" HORIZONTALLY FROM THE BASE OF THE POLE TO POLE TOP CONNECTION POINT AS DETERMINED BY ENTERGY.
2. UNDERGROUND CONDUIT PATHWAY FROM POLE RISER DROP TO ACCESS ROAD "T" INTERSECTION HANDHOLE STRUCTURE. PROVIDE EMPTY UNDERGROUND CONDUIT PATHWAY BY HORIZONTAL DIRECTIONAL BORE. PROVIDE INTERMEDIATE HANDHOLE STRUCTURES AS INDICATED ON DRAWINGS IN ACCORDANCE WITH ENTERGY'S INSTALLATION REQUIREMENTS. PROVIDE DIRECTIONAL BORE WITH (2) 6" DIAMETER CONDUITS WITH PULL CORD INSTALLED IN EACH DUCT.
3. UNDERGROUND CONCRETE ENCASED DUCTBANK FROM ACCESS ROAD "T" INTERSECTION TO THE FACILITY PLATFORM. PROVIDE HANDHOLE STRUCTURES LOCATED AT 200FT INTERVAL IN ACCORDANCE WITH ENTERGY'S REQUIREMENTS. PROVIDE (2) 6" DIAMETER SCHEDULE 40PVC CONDUITS WITH CONCRETE ENCASEMENT. PROVIDE (2) "6 DIAMETER SCHEDULE 80 PVC CONDUITS WITH PULL CORDS IN EACH DUCT FROM TRANSITION BETWEEN UNDERGROUND SERVICE HANDHOLE AND THE PLATFORM MOUNTED TRANSFORMER.
4. ENTERGY TRANSFORMER GROUNDING AND EQUIPMENT PAD AND ACCESSORIES AT PLATFORM.
5. SECONDARY CONDUIT PATHWAY AND CONDUCTORS BETWEEN THE TRANSFORMER AND METER ENCLOSURE.
5. VOR FACILITY EARTH ELECTRODE GROUNDING SYSTEM AS INDICATED ON DRAWINGS.
6. CONFIRM POLE RISER INFRASTRUCTURE, CONDUIT PATHWAYS, AND HANDHOLE LAYOUT CONFIGURATION WITH ENTERGY PRIOR TO INSTALLATION.
7. MATERIAL HANDLING AND CRANE EQUIPMENT FOR INSTALLATION OF UTILITY TRANSFORMER ON THE FACILITY PLATFORM STRUCTURE.
8. ENTERGY'S PERMITTING AND ELECTRICAL SERVICE INSTALLATION COST.
9. ENTERGY APPROVED METERING CABINET AND SERVICE ENTRANCE DISCONNECTING SWITCH EQUIPMENT AS INDICATED ON THE DRAWINGS.

SHEET NOTES ◇5

1 PROVIDE 36"L X 36"W X 36"D HANDHOLE.
2 PROVIDE 36"L X 24"W X 36"D HANDHOLE.
3 EXTEND POWER CONDUITS UP TO THE UTILITY TRANSFORMER PRIMARY WIRING COMPARTMENT AT PLATFORM LEVEL.
4 EXTEND TELCO CONDUITS UP TO THE TELCO FIBER PULLBOX LOCATED AT PLATFORM LEVEL EQUIPMENT RACK.
5 MAINTAIN AT LEAST 12" SEPARATION BETWEEN POWER AND TELCO DUCTBANKS. CONFIRM EXACT LOCATION FOR POWER DUCTBANK PATHWAY ROUTING WITH THE UTILITY COMPANY (ENTERGY).

N

0 5 10 20
Scale: 1 INCH = 10 FEET

FOR OFFICIAL USE ONLY
PUBLIC AVAILABILITY TO BE DETERMINED UNDER 5 USC 552

COMMONWEALTH OF VIRGINIA
MATHIAS M. BECKER
LIC. NO. 029564
9/12/2025
PROFESSIONAL ENGINEER

JACOBS
1100 N GLEBE RD.
SUITE 500
ARLINGTON, VA 22201

Jacobs

REV.	APPROVED DATE	DESCRIPTION	JCN	REDLINE DATE	APVD

DEPARTMENT OF TRANSPORTATION
FEDERAL AVIATION ADMINISTRATION
CENTRAL SERVICE REGION — FT WORTH, TX

LEEVILLE (LEV) VORTAC REPLACEMENT

ELECTRICAL SITE PLAN

GRAND ISLE — LEEVILLE (LEV) VORTAC — LA

REVIEWED BY	SUBMITTED BY	APPROVED BY
	SUBMITTER'S TITLE	APPROVER'S TITLE
	DESIGNED BY M. BECKER	DATE 9/12/2025 — JCN: 1508914
	DRAWN BY M. BECKER	ISSUED BY ENGINEERING SERVICES TERMINAL
	CHECKED BY JEG	DRAWING NO. LEV - D - VORTAC - E003 — REV.

LEEVILLE VORTAC
GRAND ISLE LOUISIANA

PLOT DATE/TIME: 7/31/2025 1:32:48 PM

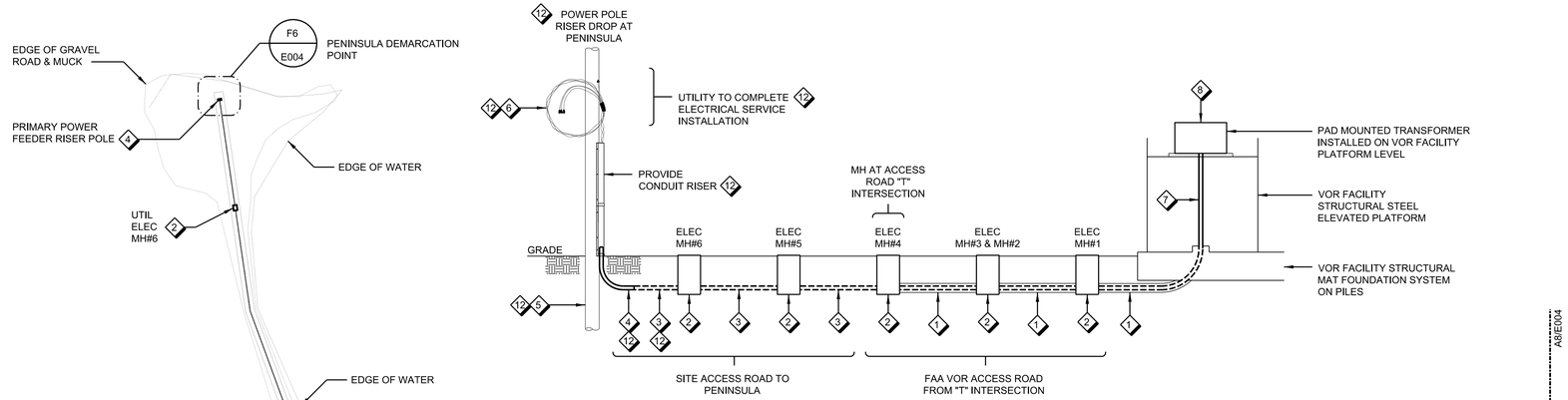

F6 / E004 POWER DIAGRAM - ELECTRICAL SITE INFRASTRUCTURE

NO SCALE:

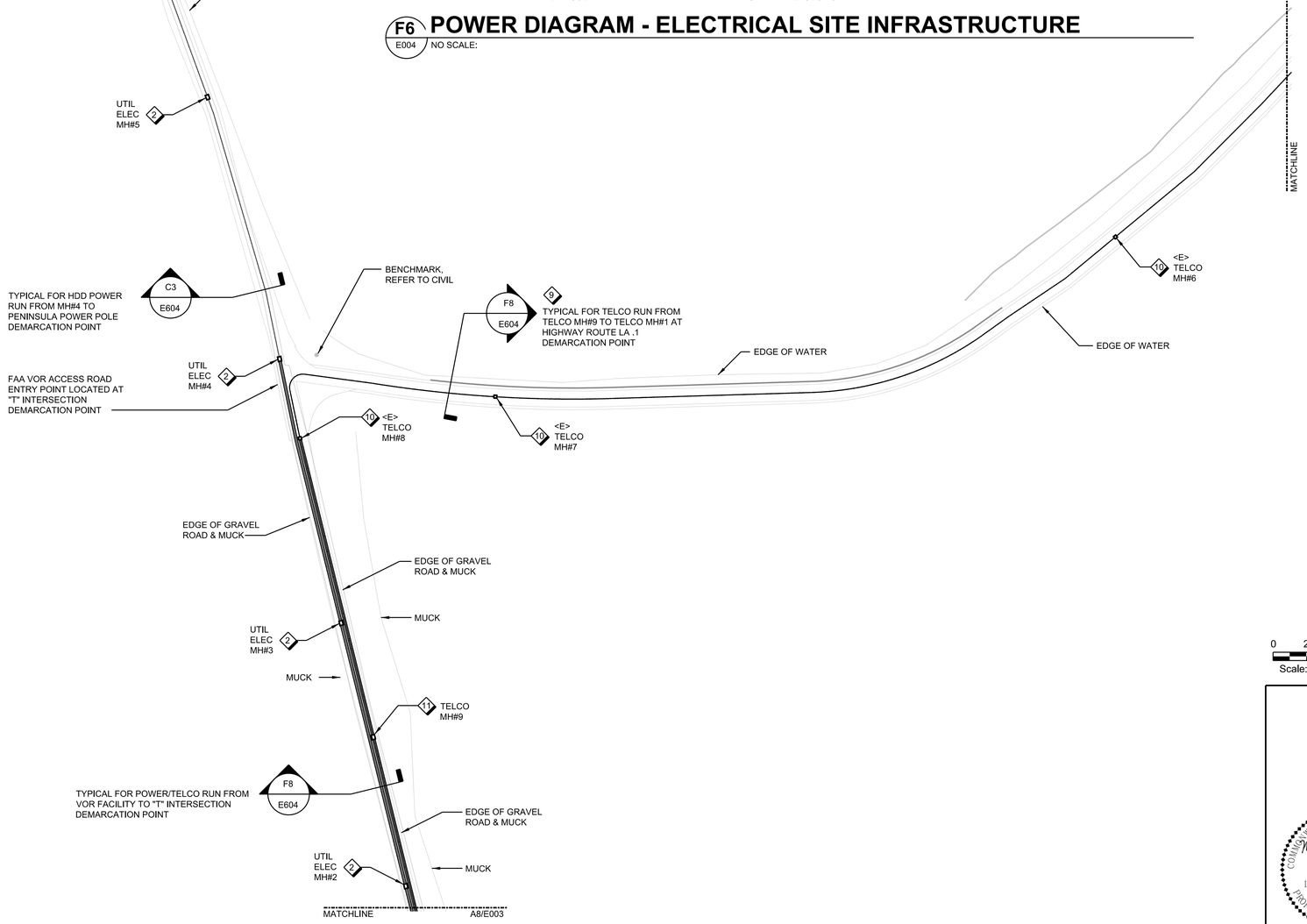

A8 / E004 SITE UTILITY PLAN - POWER AND TELCO (ZONE 2)

1" = 50'-0"

GENERAL SHEET NOTES

A. REFER TO DRAWING E003 FOR ADDITIONAL POWER AND TELCO SERVICE INFRASTRUCTURE INFORMATION.

B. REFER TO CIVIL UTILITY DRAWINGS FOR LOCATION OF POWER AND TELCO INFRASTRUCTURE ROUTING/LAYOUT PLANS. THE UTILITIES INDICATED ON THIS DRAWING ARE ILLUSTRATIVE IN NATURE.

C. REFER TO DETAIL F8/E005 DIAGRAM FOR A SUMMARY OF THE SITE TELCO INFRASTRUCTURE SYSTEM.

SHEET NOTES ◇

1 PROVIDE CONCRETE ENCASED UNDERGROUND POWER DUCTBANK. COORDINATE THE PATHWAY LAYOUT AND CONFIGURATION WITH THE ELECTRIC UTILITY PRIOR TO INSTALLATION.

2 PROVIDE ELECTRIC UTILITY APPROVED POWER MANHOLE STRUCTURE. CONTRACTOR MUST CONFIRM AND LOCATE MANHOLE SPACING INTERVALS WITH THE UTILITY. PROVIDE MANHOLES FOR DUCTBANK RUNS LONGER THAN 200FT OR IF CONDUIT PATH INCLUDES MORE THAN 3-BENDS INCLUDING RISER BENDS.

3 PROVIDE UNDERGROUND POWER DUCTBANK USING HORIZONTAL DIRECTIONAL DRILLING (HHD). COORDINATE THE PATHWAY LAYOUT AND CONFIGURATION WITH THE ELECTRIC UTILITY PRIOR TO INSTALLATION.

4 PROVIDE (2) 6" DIAMETER GRAY SCHEDULE 80 PVC CONDUIT ELBOWS AND POLE MOUNTED STRAIGHT CONDUIT RISER IN ACCORDANCE WITH THE UTILITY INSTALLATION REQUIREMENTS. PROVIDE MINIMUM 36" DIAMETER RADIUS FACTORY BEND FITTINGS. PROVIDE CONDUIT WITH UV PROTECTION. EXTEND CONDUIT RISER UP 14'-0" ABOVE GRADE TO THE POLE TOP. CONTRACTOR MUST CONFIRM POLE MOUNTING LOCATION AND DISTANCE REQUIREMENTS WITH THE UTILITY.

5 PROVIDE 45'-0" WOOD UTILITY POLE. INSTALL POLE FOUNDATION UNDERGROUND AT A DISTANCE OF AT LEAST 10% OF POLE'S TOTAL LENGTH PLUS AN ADDITIONAL 2'-0" DISTANCE.

6 THE UTILITY WILL PROVIDE THE PRIMARY FEEDER CONDUCTORS AND COMPLETE THE ELECTRICAL SERVICE INSTALLATION.

7 PROVIDE (2) 6" DIAMETER SCHEDULE 80PVC GRAY CONDUIT WITH UV PROTECTION. EXTEND CONDUIT RISER FROM UNDERGROUND MANHOLE TO THE TRANSFORMER LOCATION. PROVIDE STRUCTURAL METAL FRAMING ASSEMBLY TO SUPPORT THE CONDUIT RISER FROM MAT FOUNDATION TO PLATFORM LEVEL TRANSFORMER LOCATION.

8 TRANSFORMER IS PROVIDED BY THE ELECTRIC UTILITY. CONTRACTOR MUST PROVIDE A MATERIAL HANDLING CRANE TO LIFT TRANSFORMER FROM GRADE TO THE FINAL PLATFORM POSITION.

9 EXISTING UNDERGROUND CONDUIT PATHWAY. PROVIDE A FIBER OPTIC OSP TELCO CABLE ROUTED THROUGH THE EXISTING CONDUIT PATHWAY. CONTRACTOR MUST PERFORM FIELD INVESTIGATION TO DETERMINE LOCATION AND SUITABILITY OF THE EXISTING CONDUIT SYSTEM PATHWAY. NOTIFY THE COR IF CONDUIT AND MANHOLE SYSTEM IS NOT SUITABLE FOR NEW CABLE INSTALLATION.

10 EXISTING TELCO MANHOLE PULL BOX.

11 PROVIDE TELCO MANHOLE STRUCTURE. PROVIDE MANHOLES FOR DUCTBANK RUNS LONGER THAN 500FT OR IF CONDUIT PATH INCLUDES MORE THAN 3-BENDS INCLUDING RISER BENDS.

12 THE UTILITY (ENTERGY) DEMARCATION POINT AND CONFIGURATION MUST BE COORDINATED DIRECTLY WITH ENTERGY. THE RISER POLE CONFIGURATION IS SHOWN ILLUSTRATIVE FOR BIDDING PURPOSES. THE BASE BID CONFIGURATION IS AS SHOWN WITH ENTERGY PROVIDING AN OVERHEAD POWER SERVICE TO THE PENINSULA LOCATION. PROVIDE A BID UNIT COST LINE ITEM TO SUPPORT AN UNDERGROUND (ENTERGY PROVIDED) POWER SERVICE CONNECTION TO MH#6 IN LIEU OF THE RISER POLE POWER DROP CONNECTION.

N

0 25 50 100
Scale: 1 INCH = 50 FEET

FOR OFFICIAL USE ONLY
PUBLIC AVAILABILITY TO BE DETERMINED UNDER 5 USC 552

COMMONWEALTH OF VIRGINIA
MATHIAS M. BECKER
LIC. NO. 029564
9/12/2025
PROFESSIONAL ENGINEER

JACOBS
1100 N GLEBE RD.
SUITE 500
ARLINGTON, VA 22201

REV.	APPROVED DATE	DESCRIPTION	JCN	REDLINE DATE	APVD

Jacobs

DEPARTMENT OF TRANSPORTATION
FEDERAL AVIATION ADMINISTRATION
CENTRAL SERVICE REGION — FT WORTH, TX

LEEVILLE (LEV) VORTAC REPLACEMENT

ELECTRICAL SITE PLAN

GRAND ISLE — LEEVILLE (LEV) VORTAC — LA

REVIEWED BY | SUBMITTED BY | APPROVED BY
SUBMITTER'S TITLE | APPROVER'S TITLE

LEEVILLE VORTAC
GRAND ISLE LOUISIANA

DESIGNED BY M. BECKER
DRAWN BY M. BECKER
CHECKED BY JEG
ISSUED BY ENGINEERING SERVICES TERMINAL
DATE 9/12/2025 JCN: 1508914
DRAWING NO. LEV - D - VORTAC - E004
REV.

PLOT DATE/TIME: 7/31/2025 1:32:48 PM

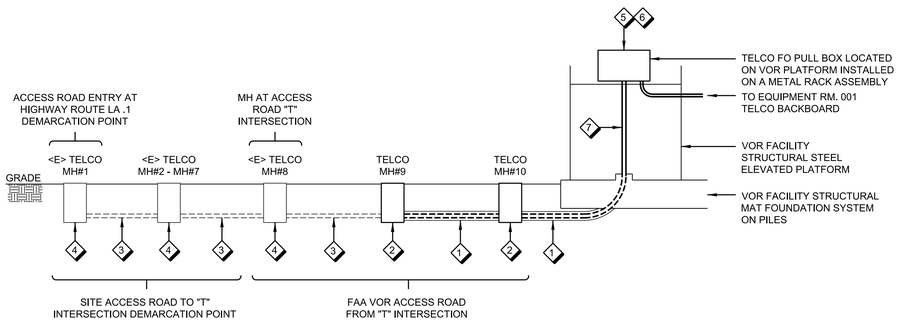

F8 / E005 TELCO DIAGRAM - SITE FIBER OPTIC INFRASTRUCTURE

NO SCALE:

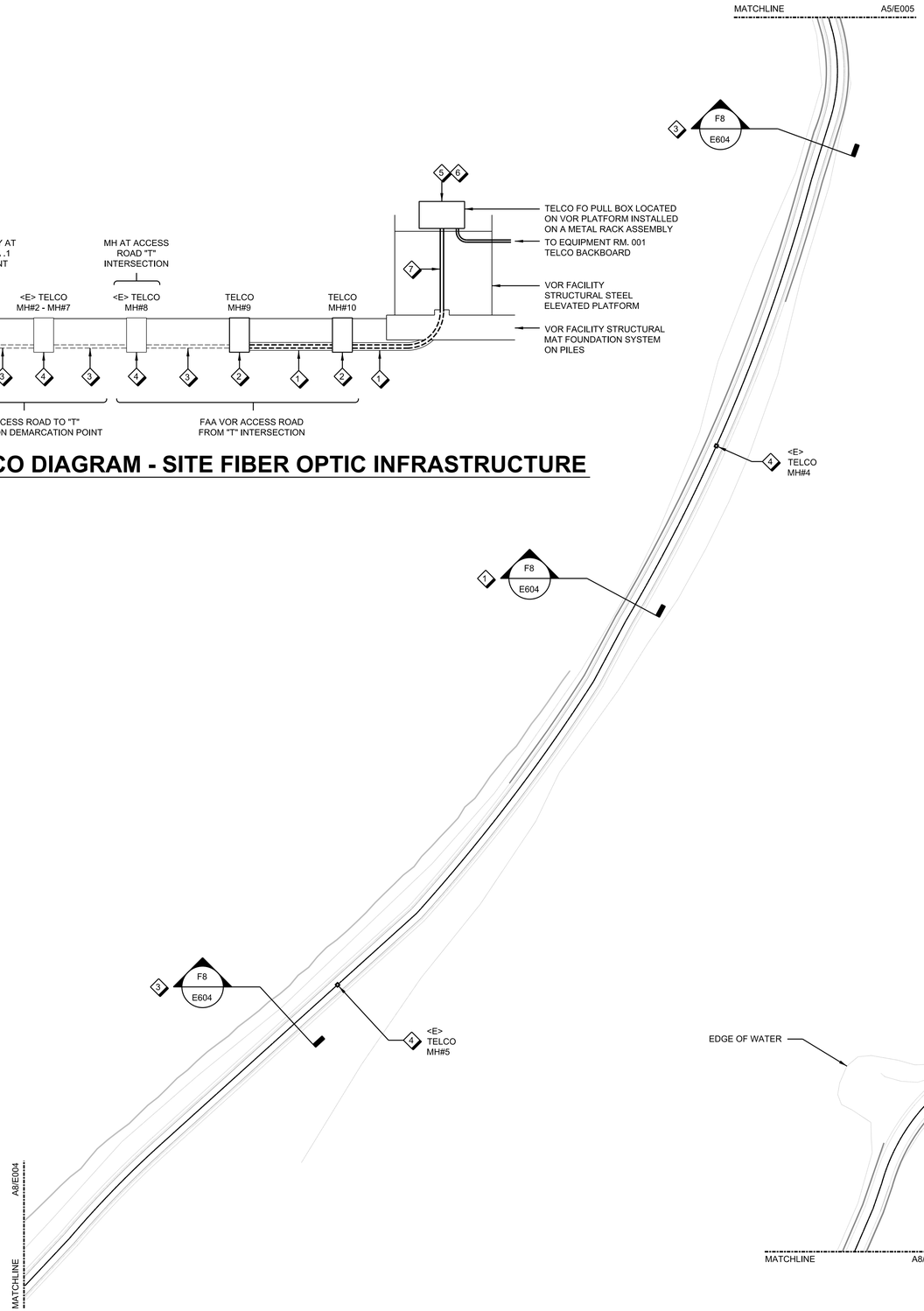

A8 / E005 SITE UTILITY PLAN - TELCO (ZONE-3)

1" = 50'-0"

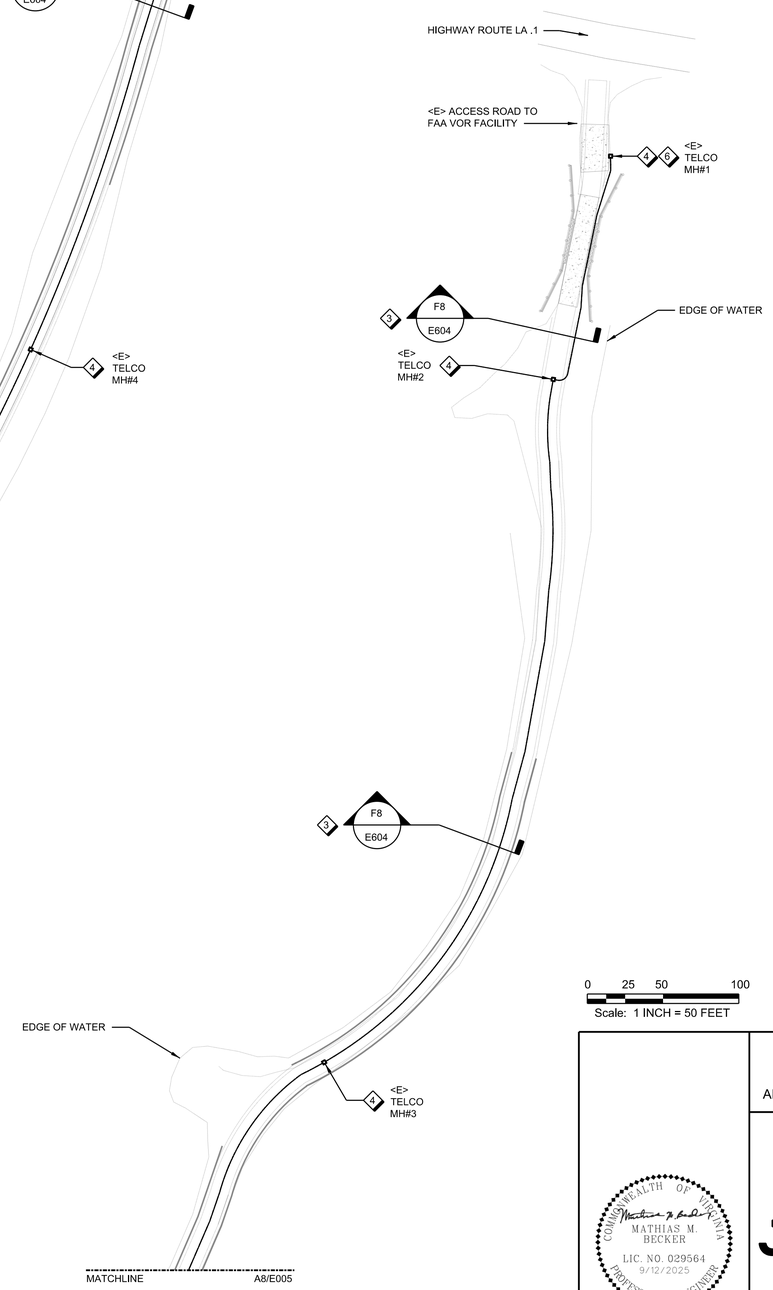

A5 / E005 SITE UTILITY PLAN - TELCO (ZONE-4)

1" = 50'-0"

GENERAL SHEET NOTES

A. REFER TO DRAWINGS E003 AND E004 FOR ADDITIONAL POWER AND TELCO SERVICE INFRASTRUCTURE INFORMATION.

B. REFER TO CIVIL UTILITY DRAWINGS FOR LOCATION OF POWER AND TELCO INFRASTRUCTURE ROUTING/LAYOUT PLANS. THE UTILITIES INDICATED ON THIS DRAWING ARE ILLUSTRATIVE IN NATURE.

SHEET NOTES

1 PROVIDE CONCRETE ENCASED UNDERGROUND TELCO DUCTBANK. COORDINATE THE PATHWAY LAYOUT AND CONFIGURATION WITH THE VOR FACILITY UTILITIES PRIOR TO INSTALLATION.

2 PROVIDE TELCO MANHOLE STRUCTURE. PROVIDE MANHOLES FOR DUCTBANK RUNS LONGER THAN 500FT OR IF CONDUIT PATH INCLUDES MORE THAN 3-BENDS INCLUDING RISER BENDS.

3 EXISTING UNDERGROUND CONDUIT PATHWAY. PROVIDE A FIBER OPTIC OSP TELCO CABLE ROUTED THROUGH THE EXISTING CONDUIT PATHWAY. CONTRACTOR MUST PERFORM FIELD INVESTIGATION TO DETERMINE LOCATION AND SUITABILITY OF THE EXISTING CONDUIT SYSTEM PATHWAY. NOTIFY THE COR IF CONDUIT AND MANHOLE SYSTEM IS NOT SUITABLE FOR NEW CABLE INSTALLATION.

4 EXISTING TELCO MANHOLE PULL BOX.

5 PROVIDE 30"W x 30"L x 10"D NEMA 4X PULL BOX. INSTALL PULL BOX ON METAL FRAMING ASSEMBLY AT PLATFORM LEVEL, ADJACENT TO POWER DISTRIBUTION SWITCHES, REFER TO DETAIL F5/E303. EXTEND SURFACE MOUNTED CONDUIT PATHWAY FROM PULL BOX TO SHELTER EQUIPMENT ROOM 001, TELCO BACKBOARD.

6 PROVIDE (1) FIBER OPTIC OSP CABLE FROM SHELTER EQUIPMENT ROOM 001, TELCO BACKBOARD ROUTED THROUGH THE SITE CONDUIT PATHWAY TO TELCO SERVICE DEMARCATION POINT LOCATED AT TELCO MH#1, AT HIGHWAY ROUTE LA .1 ACCESS ROAD. PROVIDE 20FT COILED CABLE SLACK IN MH#1 FOR FINAL TERMINATION BY THE TELCO UTILITY.

7 PROVIDE (2) 6" DIAMETER SCHEDULE 80PVC GRAY CONDUIT WITH UV PROTECTION. EXTEND CONDUIT RISER FROM UNDERGROUND TELCO MH#11 TO PLATFORM LEVEL PULL BOX LOCATION. PROVIDE STRUCTURAL METAL FRAMING ASSEMBLY TO SUPPORT THE CONDUIT RISER FROM MAT FOUNDATION TO PLATFORM LEVEL STRUCTURE.

0 25 50 100
Scale: 1 INCH = 50 FEET

FOR OFFICIAL USE ONLY
PUBLIC AVAILABILITY TO BE DETERMINED UNDER 5 USC 552

COMMONWEALTH OF VIRGINIA
MATHIAS M. BECKER
LIC. NO. 029564
9/12/2025
PROFESSIONAL ENGINEER

JACOBS
1100 N GLEBE RD.
SUITE 500
ARLINGTON, VA 22201

REV.	APPROVED DATE	DESCRIPTION	JCN	REDLINE DATE	APVD

DEPARTMENT OF TRANSPORTATION
FEDERAL AVIATION ADMINISTRATION
CENTRAL SERVICE REGION — FT WORTH, TX

LEEVILLE (LEV) VORTAC REPLACEMENT

ELECTRICAL SITE PLAN

GRAND ISLE — LEEVILLE (LEV) VORTAC — LA

REVIEWED BY | SUBMITTED BY | APPROVED BY
SUBMITTER'S TITLE | APPROVER'S TITLE

LEEVILLE VORTAC
GRAND ISLE LOUISIANA

DESIGNED BY M. BECKER
DRAWN BY M. BECKER
CHECKED BY JEG
ISSUED BY ENGINEERING SERVICES TERMINAL
DATE 9/12/2025 JCN: 1508914
DRAWING NO. LEV - D - VORTAC - E005
REV.

PLOT DATE/TIME: 7/31/2025 1:32:48 PM

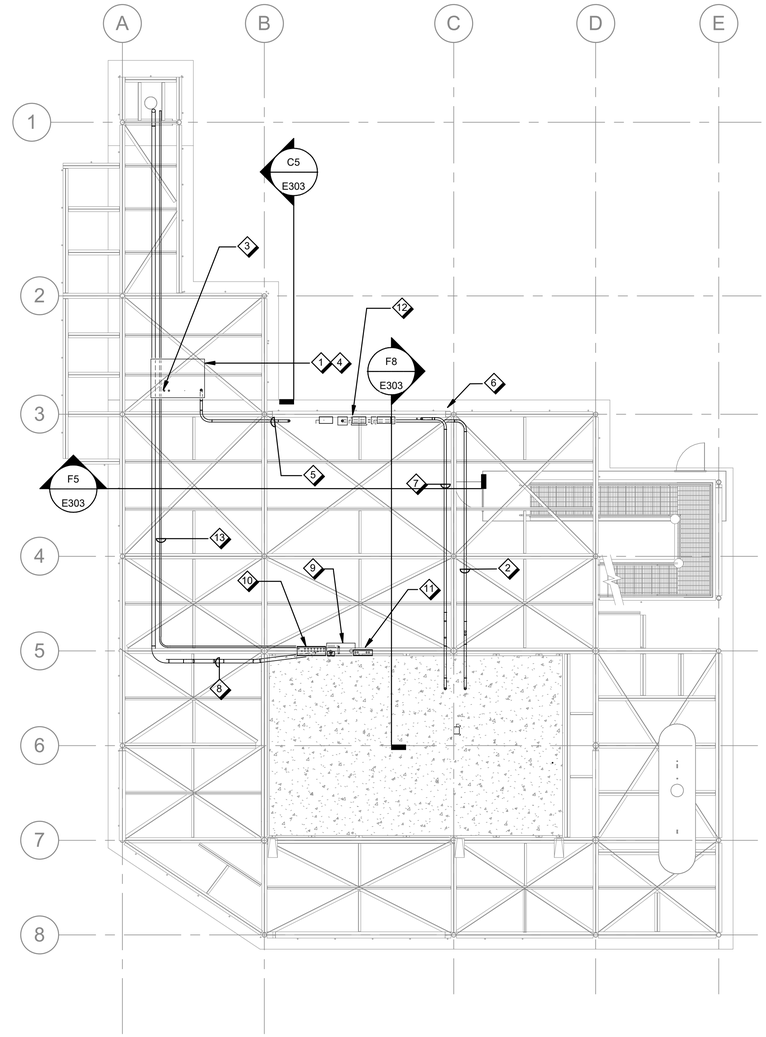

C7 / E101 ELECTRIAL OVERALL PLAN - SHELTER PLATFORM LEVEL

1/8" = 1'-0"

GENERAL SHEET NOTES

A. CONDUIT ROUTING IS DIAGRAMMATICALLY SHOWN. CONTRACTOR TO FIELD VERIFY EXISTING CONDITION AND PROVIDE ROUTING PLAN.

B. REFER TO POWER ONE-LINE DIAGRAM FOR FEEDER SCHEDULE AND EQUIPMENT CONNECTION INFORMATION.

C. PROVIDE NEMA 4X, TYPE 316 STAINLESS STEEL ENCLOSURES FOR ALL EXTERIOR MOUNTED EQUIPMENT UNLESS OTHERWISE INDICATED.

D. CONDUIT LAYOUT SHOWN WAS PROVIDED BY FAA INSTALLERS AND IS ILLUSTRATIVE. CONTRACTOR IS REQURIED TO PREPARE A SET OF COORDINATION DRAWINGS FOR FAA REVIEW AND APPROVAL PRIOR TO INSTALLATION DRAWINGS. COORDINATION DRAWINGS MUST BE PREPARED IN ACCORDANCE WITH SPECIFICATION 01 31 00 SECTION 1.8.

SHEET NOTES ◇

1 TRANSFORMER EQUIPMENT TO BE PROVIDED BY THE ELECTRIC UTILITY. REFER TO DETAIL A8/E604 FOR ADDITIONAL INFORMATION.

2 ROUTE CONDUIT TO ATS HORIZONTALLY UNDER THE SHELTER STRUCTURAL PLATFORM. PROVIDE METAL CHANNEL FRAMING SYSTEM TO ATTACH CONDUIT SYSTEMS TO THE VOR STRUCTURE. REFER TO ONE-LINE DIAGRAM FOR ADDITIONAL INFORMATION.

3 ROUTE POWER CIRCUITRY CONDUITS VERTICALLY TO UNDERSIDE OF TRANSFORMER. REFER TO STRUCTURAL FOR CONDUIT SUPPORT INFORMATION.

4 ROUTE TRANSFORMER PRIMARY CONDUITS VERTICALLY TO UNDERSIDE OF UTILITY TRANSFORMER. REFER TO STRUCTURAL FOR CONDUIT SUPPORT INFORMATION.

5 ROUTE TRANSFORMER SECONDARY CONDUITS TO SERVICE ENTRANCE DISCONNECT SWITCH HORIZONTALLY UNDER THE SHELTER STRUCTURAL PLATFORM. PROVIDE METAL CHANNEL FRAMING SYSTEM TO ATTACH CONDUIT SYSTEMS TO THE VOR STRUCTURE.

6 ROUTE TELECOM CONDUITS ALONG VOR STRUCTURAL STEEL COLUMN AND BEAM MEMBERS. PROVIDE METAL CHANNEL FRAMING SYSTEM TO ATTACH CONDUIT SYSTEMS TO THE VOR STRUCTURE.

7 ROUTE TELECOM CONDUITS TO ELECTRONIC EQUIPMENT ROOM HORIZONTALLY UNDER THE SHELTER STRUCTURAL PLATFORM. PROVIDE METAL CHANNEL FRAMING SYSTEM TO ATTACH CONDUIT SYSTEMS TO THE VOR STRUCTURE.

8 ROUTE TELECOM CONDUIT FROM TACAN MONITOR TOWER TO TACAN ANTENNA INTERFACE BOX.

9 PROVIDE VOR TACAN ANTENNA INTERFACE BOX.

10 PROVIDE STAINLESS STEEL NEMA 4X WIREWAY FOR ANTENNA CABLE ENTRY.

11 PROVIDE 6"X6" WIREWAY INSTALLED UNDER TEEPEE.

12 REFER TO F5/E303 FOR EQUIPMENT INFORMATION.

13. ROUTE POWER CONDUIT FROM TACAN MONITOR TOWER TO TACAN ANTENNA INTERFACE BOX.

N

8 0 8 16
Scale: 1/8 INCH = 1 FOOT

FOR OFFICIAL USE ONLY
PUBLIC AVAILABILITY TO BE DETERMINED UNDER 5 USC 552

COMMONWEALTH OF VIRGINIA
MATHIAS M. BECKER
LIC. NO. 029564
9/12/2025
PROFESSIONAL ENGINEER

JACOBS
1100 N GLEBE RD.
SUITE 500
ARLINGTON, VA 22201

REV.	APPROVED DATE	DESCRIPTION	JCN	REDLINE DATE	APVD

Jacobs

DEPARTMENT OF TRANSPORTATION
FEDERAL AVIATION ADMINISTRATION
CENTRAL SERVICE REGION — FT WORTH, TX

LEEVILLE (LEV) VORTAC REPLACEMENT

ELECTRICAL OVERALL PLANS

GRAND ISLE — LEEVILLE (LEV) VORTAC — LA

REVIEWED BY | SUBMITTED BY | APPROVED BY
SUBMITTER'S TITLE | APPROVER'S TITLE

LEEVILLE VORTAC
GRAND ISLE LOUISIANA

DESIGNED BY D. RUSTAMOVA
DRAWN BY D. RUSTAMOVA
CHECKED BY M. BECKER

ISSUED BY: ENGINEERING SERVICES TERMINAL

DATE 9/12/2025 | JCN: 1508914
DRAWING NO. LEV - D - VORTAC - E101 | REV.

PLOT DATE/TIME: 9/10/2025 4:01:40 PM

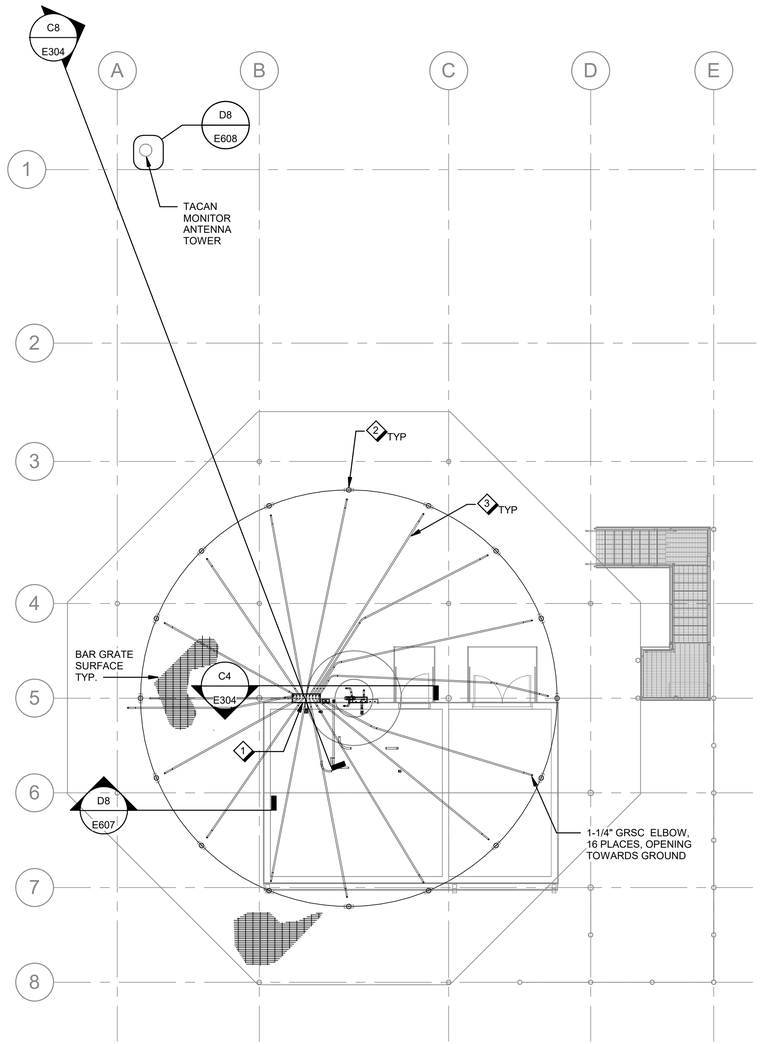

C8 / E102 ELECTRICAL OVERALL PLAN - COUNTERPOISE LEVEL

1/8" = 1'-0"

GENERAL SHEET NOTES

A. COORDINATE LOCATION OF OUTLETS AND DEVICES WITH OTHER DISCIPLINES. REFER TO ARCHITECTURAL AND MECHANICAL ELEVATIONS, DETAILS, AND MOUNTING INSTALLATION INFORMATION. NOTIFY COR OF ANY DISCREPANCIES BEFORE INSTALLATION OF ANY CONDUIT, OUTLET BOXES, AND/OR SUPPORTING HARDWARE.

B. EQUIPMENT IDENTIFIED WITH (GFE-FAA) DESIGNATION IS GOVERNMENT FURNISHED, CONTRACTOR INSTALLED EQUIPMENT.

C. PROVIDE NEMA 4X, TYPE 316 STAINLESS STEEL ENCLOSURES FOR ALL EXTERIOR MOUNTED EQUIPMENT UNLESS OTHERWISE INDICATED. .

SHEET NOTES

1 PROVIDE STAINLESS STEEL NEMA 4X WIREWAY FOR ANTENNA CABLE ENTRY.

2 VOR MONITOR ANTENNA (GOVERNMENT FURNISHED) AND ANTENNA MOUNTING ASSEMBLY AT 22° 30' SPACING. FIRST ANTENNA MOUNT ALIGNED WITH MAGNETIC NORTH.

3 PROVIDE 1-1/4" GRSC TO WIREWAY.

N

8 0 8 16
Scale: 1/8 INCH = 1 FOOT

FOR OFFICIAL USE ONLY
PUBLIC AVAILABILITY TO BE DETERMINED UNDER 5 USC 552

COMMONWEALTH OF VIRGINIA
MATHIAS M. BECKER
LIC. NO. 029564
9/12/2025
PROFESSIONAL ENGINEER

JACOBS
1100 N GLEBE RD.
SUITE 500
ARLINGTON, VA 22201

REV.	APPROVED DATE	DESCRIPTION	JCN	REDLINE DATE	APVD

Jacobs

DEPARTMENT OF TRANSPORTATION
FEDERAL AVIATION ADMINISTRATION
CENTRAL SERVICE REGION — FT WORTH, TX

LEEVILLE (LEV) VORTAC REPLACEMENT

ELECTRICAL OVERALL PLANS

GRAND ISLE — LEEVILLE (LEV) VORTAC — LA

REVIEWED BY | SUBMITTED BY | APPROVED BY
SUBMITTER'S TITLE | APPROVER'S TITLE

LEEVILLE VORTAC
GRAND ISLE LOUISIANA

DESIGNED BY D. RUSTAMOVA
DRAWN BY D. RUSTAMOVA
CHECKED BY M. BECKER
ISSUED BY ENGINEERING SERVICES TERMINAL
DATE 9/12/2025 JCN: 1508914
DRAWING NO. LEV - D - VORTAC - E102 REV.

PLOT DATE/TIME: 9/10/2025 4:01:41 PM

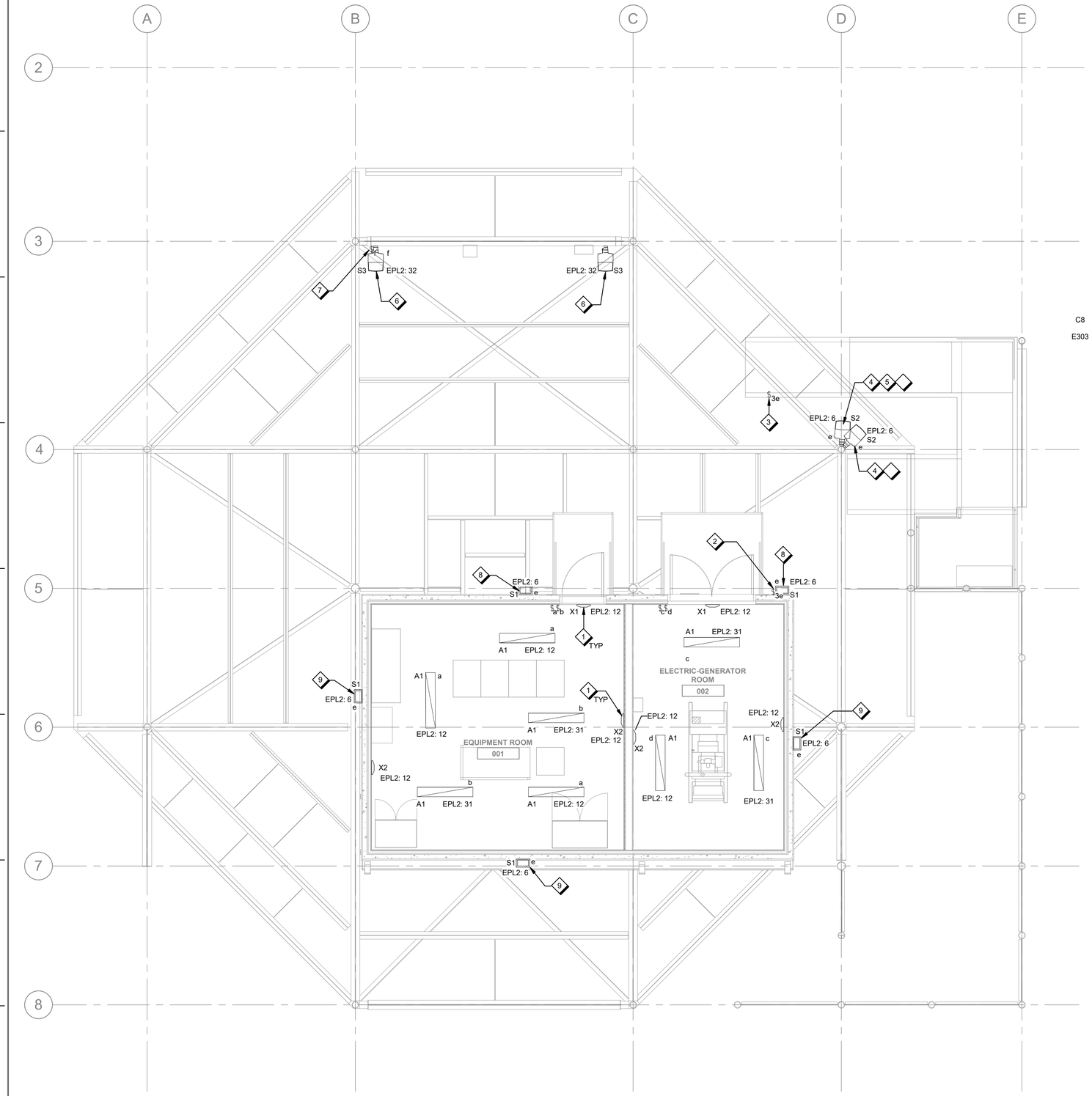

GENERAL SHEET NOTES

A. REFER TO LIGHTING FIXTURE SCHEDULE, DRAWING E551 FOR FIXTURE TYPE REQUIREMENTS.

SHEET NOTES

1. PROVIDE A WALL MOUNTED EMERGENCY BUG-EYE LIGHT FIXTURE WITH BATTERY BACKUP ILLUMINATION FOR EGRESS PATH.
2. PROVIDE MANUAL ON/OFF THREE-WAY SWITCH TO CONTROL EXTERIOR LIGHTING.
3. PROVIDE A MANUAL ON/OFF THREE-WAY SWITCH TO CONTROL THE EXTERIOR LIGHTING AT THE ENTRANCE OF THE STAIRWELL. MOUNT THE THREE-WAY SWITCH ON THE SIDE OF THE STAIRWELL RAIL.
4. PROVIDE STRUCTURAL COLUMN SURFACE MOUNTED LIGHT FIXTURE WITH BALLISTIC RESISTANT SHIELD TO ILLUMINATE THE STAIR LANDING.
5. LIGHT FIXTURE IS BELOW STRUCTURAL STEEL PLATFORM. REFER TO C8/E303 FOR MORE INFORMATION.
6. PROVIDE LIGHT FIXTURE WITH BALLISTIC RESISTANT SHIELD TO ILLUMINATE THE SHELTER PLATFORM LEVEL EQUIPMENT AREA. MOUNT FIXTURE TO SLOTTED CHANNEL FRAMING SYSTEM SUPPORT RACK 10'-0" ABOVE SHELTER PLATFORM LEVEL.
7. MOUNT LIGHT SWITCH TO SLOTTED CHANNEL FRAMING SYSTEM SUPPORT RACK.
8. MOUNT FIXTURE 7'-0" ABOVE SHELTER PLATFORM LEVEL.
9. MOUNT FIXTURE 8'-9" ABOVE SHELTER PLATFORM LEVEL.

A8 ELECTRICAL LIGHTING PLAN

E111 1/4" = 1'-0"

4 0 4 8
Scale: 1/4 INCH = 1 FOOT

FOR OFFICIAL USE ONLY
PUBLIC AVAILABILITY TO BE DETERMINED UNDER 5 USC 552

JACOBS
1100 N GLEBE RD.
SUITE 500
ARLINGTON, VA 22201

REV.	APPROVED DATE	DESCRIPTION	JCN	REDLINE DATE	APVD

COMMONWEALTH OF VIRGINIA
MATHIAS M. BECKER
LIC. NO. 029564
9/12/2025
PROFESSIONAL ENGINEER

Jacobs

DEPARTMENT OF TRANSPORTATION
FEDERAL AVIATION ADMINISTRATION
CENTRAL SERVICE REGION — FT WORTH, TX

LEEVILLE (LEV) VORTAC REPLACEMENT

ELECTRICAL LIGHTING PLANS

GRAND ISLE — LEEVILLE (LEV) VORTAC — LA

REVIEWED BY | SUBMITTED BY | APPROVED BY
SUBMITTER'S TITLE | APPROVER'S TITLE

LEEVILLE VORTAC
GRAND ISLE LOUISIANA

DESIGNED BY D. RUSTAMOVA
DRAWN BY D. RUSTAMOVA
CHECKED BY M. BECKER

ISSUED BY: ENGINEERING SERVICES TERMINAL

DATE 9/12/2025 JCN: 1508914
DRAWING NO. LEV - D - VORTAC - E111
REV.

PLOT DATE/TIME: 9/10/2025 4:01:42 PM

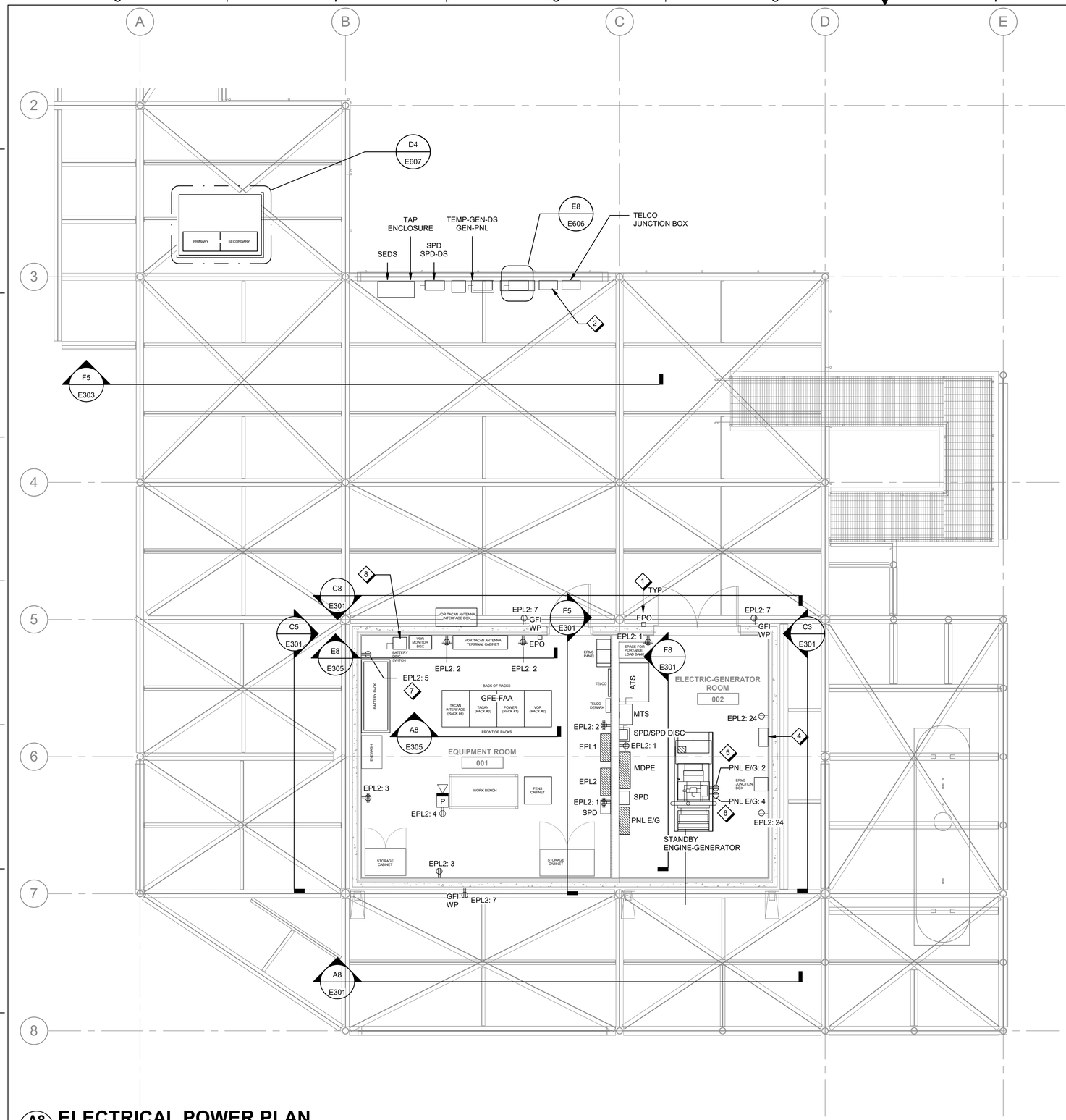

A8 ELECTRICAL POWER PLAN

E121 1/4" = 1'-0"

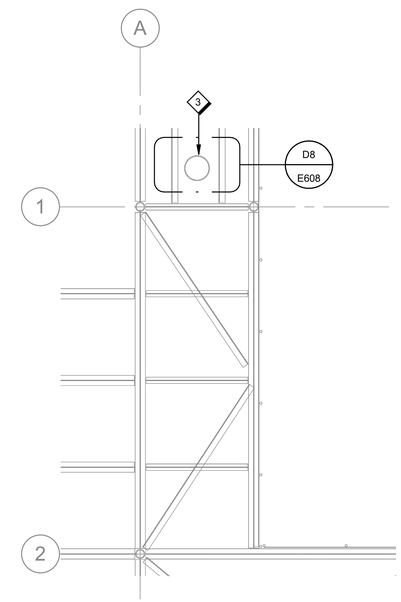

A4 POWER PLAN CONTINUED

E121 1/4" = 1'-0"

GENERAL SHEET NOTES

A. COORDINATE LOCATION OF OUTLETS AND DEVICES WITH OTHER DISCIPLINES. REFER TO ARCHITECTURAL AND MECHANICAL ELEVATIONS, DETAILS, AND MOUNTING INSTALLATION INFORMATION. NOTIFY COR OF ANY DISCREPANCIES BEFORE INSTALLATION OF ANY CONDUIT, OUTLET BOXES, AND/OR SUPPORTING HARDWARE.

B. REFER TO DRAWING E551 FOR MECHANICAL EQUIPMENT CONNECTION SCHEDULE.

C. EQUIPMENT IDENTIFIED WITH (GFE-FAA) DESIGNATION IS GOVERNMENT FURNISHED, CONTRACTOR INSTALLED EQUIPMENT.

D. PROVIDE 24"W x 6"D, 9" RUNG SPACING, LADDER STYLE COMMUNICATIONS CABLE TRAY MOUNTED ON SUSPENDED METAL FRAMING SYSTEM LOCATED ABOVE THE ELECTRONIC EQUIPMENT CABINETS. CABLE TRAY MUST COMPLY WITH FAA SPECIFICATION 1217 (LATEST EDITION): ELECTRICAL WORK, PREMISE WIRING REQUIREMENTS.

E. PROVIDE 4"W x 4"D NEMA-1 WIREWAY ASSEMBLIES WITH SCREW TYPE COVER LIDS FOR BRANCH POWER CIRCUITRY.

F. FIELD COORDINATE THE CONFIGURATION OF EQUIPMENT ROOM 001 SYSTEMS TO OPTIMIZE QUANTITY AND LOCATION OF ELECTRONIC EQUIPMENT CABINETS. TYPICAL ELECTRONIC EQUIPMENT CABINET RACK SIZE IS 24"W x 32"D x 84"H. PROVIDE AND MAINTAIN ALL WORKING CLEARANCES AROUND ELECTRICAL EQUIPMENT AS REQUIRED PER NFPA 70.

1. 4'-0" MIN. CLEARANCE FROM OUTSIDE ROW TO THE ADJACENT WALL OR WALL MOUNTED EQUIPMENT.
2. 5'-0" MIN. CLEARANCE FROM END ROWS TO THE ADJACENT WALL OR WALL MOUNTED EQUIPMENT.
3. 12" MIN. CLEARANCE FROM TOP OF OVERHEAD CABLE TRAY UTILITIES TO OTHER BUILDING UTILITIES.
4. MAINTAIN AT LEAST 6" MIN. CLEARANCE BETWEEN TOP OF CABLE TRAY AND BUILDING STRUCTURE ELEMENTS.

G. PROVIDE NEMA 4X, TYPE 316 STAINLESS STEEL ENCLOSURES FOR ALL EXTERIOR MOUNTED EQUIPMENT UNLESS OTHERWISE INDICATED.

SHEET NOTES ◇

1 PROVIDE EMERGENCY POWER OFF SWITCH.
2 PROVIDE CAM-LOCK CONFIGURED CONNECTION BOX FOR TEMPORARY GENERATOR POWER TIE-IN CONNECTION. REFER TO DETAIL E8/E606 AND POWER ONE-LINE DIAGRAM A8/E801 FOR ADDITIONAL INFORMATION.
3 REFER TO TACAN TOWER MONITOR ANTENNA DETAILS.
4 PROVIDE CAM-LOCK CONFIGURED CONNECTION BOX FOR E/G LOAD BANK POWER TIE-IN CONNECTION. REFER TO DETAIL E5/E606 AND POWER ONE-LINE DIAGRAM A8/E801 FOR ADDITIONAL INFORMATION.
5 PROVIDE NEMA 5-20R SIMPLEX RECEPTACLE DEVICE FOR ENGINE COOLANT HEATER.
6 PROVIDE NEMA 5-20R SIMPLEX RECEPTACLE DEVICE FOR EG BATTERY CHARGER ASSEMBLY.
7 PROVIDE NEMA 5-20R SIMPLEX RECEPTACLE DEVICE FOR BATTERY MONITORING SYSTEM.
8 MOUNT BATTERY DISCONNECT SWITCH ON STRUT CHANNEL. ENSURE FACE OF BATTERY DISCONNECT SWITCH PROTRUDES PAST OR IS EVEN WITH FACE OF VOR MONITOR BOX.

4 0 4 8
Scale: 1/4 INCH = 1 FOOT

FOR OFFICIAL USE ONLY
PUBLIC AVAILABILITY TO BE DETERMINED UNDER 5 USC 552

COMMONWEALTH OF VIRGINIA
MATHIAS M. BECKER
LIC. NO. 029564
9/12/2025
PROFESSIONAL ENGINEER

JACOBS
1100 N GLEBE RD.
SUITE 500
ARLINGTON, VA 22201

REV.	APPROVED DATE	DESCRIPTION	JCN	REDLINE DATE	APVD

Jacobs

DEPARTMENT OF TRANSPORTATION
FEDERAL AVIATION ADMINISTRATION
CENTRAL SERVICE REGION — FT WORTH, TX

LEEVILLE (LEV) VORTAC REPLACEMENT

ELECTRICAL POWER PLAN

GRAND ISLE — LEEVILLE (LEV) VORTAC — LA

REVIEWED BY | SUBMITTED BY | APPROVED BY
SUBMITTER'S TITLE | APPROVER'S TITLE

LEEVILLE VORTAC
GRAND ISLE LOUISIANA

DESIGNED BY D. RUSTAMOVA
DRAWN BY D. RUSTAMOVA
CHECKED BY M. BECKER
ISSUED BY ENGINEERING SERVICES TERMINAL
DATE 9/12/2025 JCN: 1508914
DRAWING NO. LEV - D - VORTAC - E121 REV.

PLOT DATE/TIME: 9/10/2025 4:01:43 PM

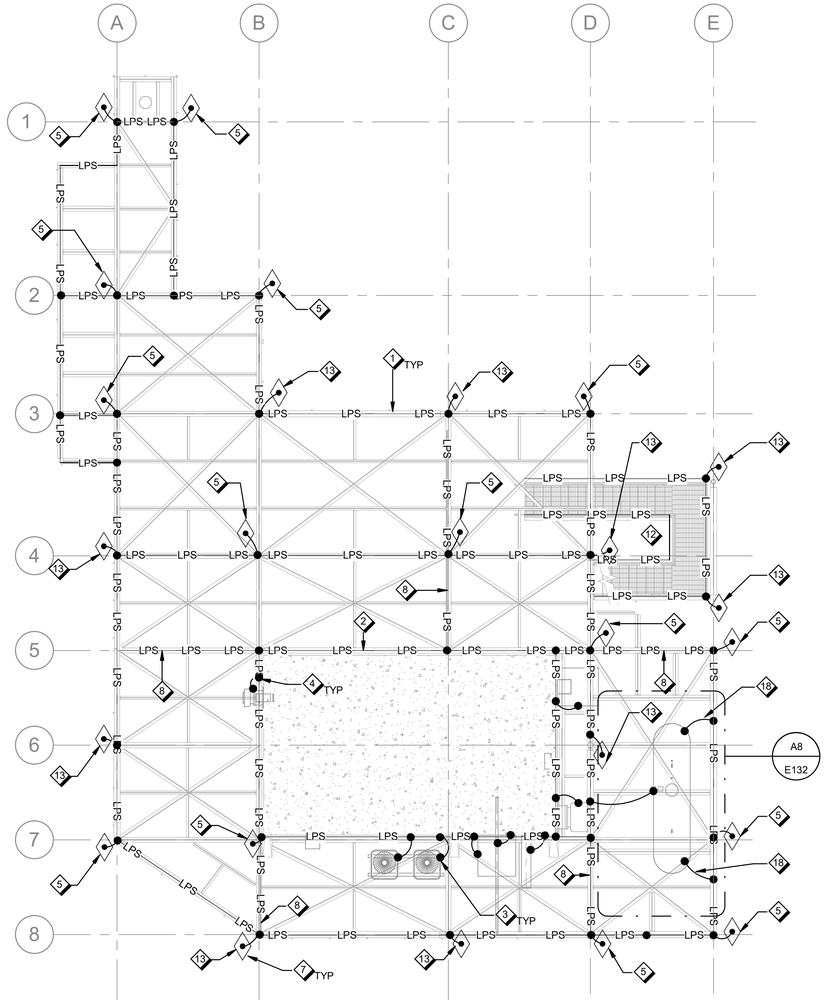

C8 / E131 LIGHTNING PROTECTION PLAN - SHELTER PLATFORM LEVEL

1/8" = 1'-0"

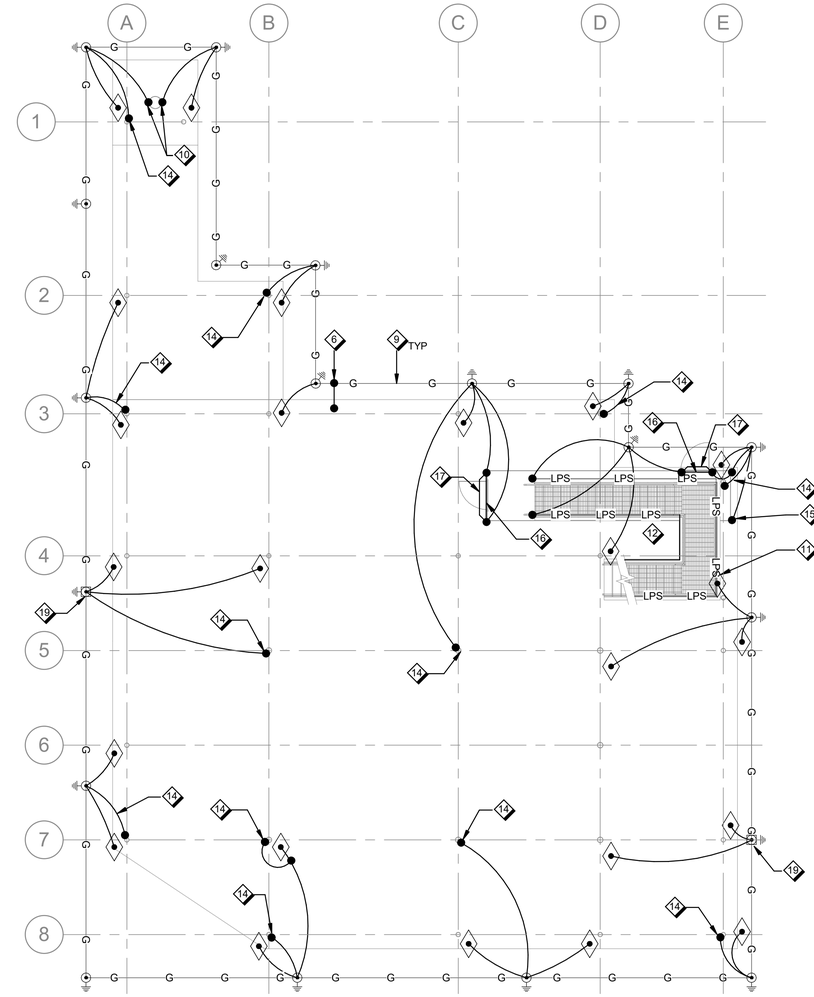

C5 / E131 GROUNDING PLAN - FOUNDATION LEVEL

1/8" = 1'-0"

GENERAL SHEET NOTES

A. PROVIDE AN EARTH ELECTRODE SYSTEM (EES), GROUNDING AND LIGHTNING PROTECTION SYSTEM (LPS) IN ACCORDANCE WITH THE NEC, NFPA 780 AND FAA-STD-019 (LATEST EDITION). THE LIGHTNING PROTECTION SYSTEM MUST BE PROVIDED IN ACCORDANCE WITH UL STANDARD 96A.

B. ALL EXPOSED METALLIC BODIES, SUCH AS EQUIPMENT ENCLOSURES, MECHANICAL PIPING, HVAC DUCTWORK, AND STAIR RAIL ASSEMBLIES MUST BE BONDED TO THE LIGHTNING PROTECTION SYSTEM.

C. PROVIDE CLASS II GRADE SYSTEM COMPONENTS IN ACCORDANCE WITH FAA-STD-019 (LATEST EDITION). REQUIREMENTS FOR CLASS II SYSTEM INSTALLATIONS.

D. PROVIDE COMMON BONDING OF BUILDING METAL PARTS WHERE REQUIRED PER FAA-STD-019 (LATEST EDITION). BUILDING STEEL, METAL ROOFING, METAL SUPPORTING STRUCTURES, CONCRETE REINFORCING STEEL, SIDING, LADDERS, DUCT, AND SIMILAR METAL PARTS ARE NOT TO BE USED AS SUBSTITUTES FOR ROOF OR DOWN CONDUCTORS.

SHEET NOTES

1 ROUTE CLASS II LIGHTNING PROTECTION CONDUCTOR ALONG THE PERIMETER OF THE UNDERSIDE OF THE STEEL STRUCTURAL PLATFORM.

2 PROVIDE CLASS II LIGHTNING PROTECTION CONDUCTOR ALONG THE PERIMETER OF THE BUILDING UNDERNEATH THE STEEL STRUCTURAL PLATFORM.

3 BOND ALL MECHANICAL EQUIPMENT AND METALLIC OBJECTS WITHIN 6 FEET OF A LIGHTNING PROTECTION SYSTEM CONDUCTOR TO THE LPS WITH A CLASS II CONDUCTOR.

4 BOND METALLIC OBJECTS ON SIDE OF BUILDING TO PERIMETER LOOP UNDERNEATH THE STEEL STRUCTURAL PLATFORM.

5 PROVIDE DOWN CONDUCTOR FROM FACILITY SHELTER PLATFORM LEVEL TO EES. PROVIDE SCHEDULE 80 PVC CONDUIT FROM GRADE TO 10 FEET ABOVE GRADE FOR DOWN CONDUCTORS.REFER TO DRAWING D8/E132 FOR LPS CONTINUATION.

6 PROVIDE #2 AWG COPPER GROUNDING ELECTRODE CONDUCTOR FROM PANELBOARD GROUND BUS AND CONNECT TO EES COUNTERPOISE CONDUCTOR.

7 ROUTE DOWN CONDUCTOR ALONG THE STRUCTURAL STEEL COLUMN.

8 EXTEND CONDUCTOR LOOP AROUND BUILDING TO PLATFORM CONDUCTOR LOOP.

9 PROVIDE A #4/0 AWG BARE COPPER COUNTERPOISE CONDUCTOR AND INTERCONNECT GROUND RODS. PROVIDE EXOTHERMICALLY WELDED CONNECTIONS.

10 BOND THE TACAN MONITOR ANTENNA TOWER TO THE EES WITH TWO 4/0 AWG BARE COPPER CONDUCTORS.

11 DOWN CONDUCTOR FROM LEVEL ABOVE. REFER TO C8/E131 FOR MORE INFORMATION.

12 REFER TO DETAIL A8/E302 FOR STAIRWELL BONDING.

13 DOWN CONDUCTOR CONTINUES FROM LEVEL ABOVE THROUGH PLATFORM LEVEL TO EES. PROVIDE SCHEDULE 80 PVC CONDUIT FROM GRADE TO 10 FEET ABOVE GRADE FOR DOWN CONDUCTORS. REFER TO DRAWING E132 FOR MORE INFORMATION.

14 BOND BUILDING COLUMN TO EES WITH #4/0 AWG COPPER CONDUCTOR.

15 BOND CORNER POSTS AND GATE POSTS OF SECURITY FENCE TO A GROUND ROD WITH EXOTHERMICALLY WELDED #4/0 AWG BARE COPPER CONDUCTORS.

16 PROVIDE A HORIZONTAL #6 AWG BARE STRANDED TINNED COPPER CONDUCTOR THREADED CONTINUOUSLY THROUGH THE GATE FABRIC AND MECHANICALLY BONDED TO THE GATE VERTICAL SUPPORT RAILS.

17 PROVIDE A BURIED BONDING JUMPER ACROSS THE GATE.

18 BOND THE FUEL TANK ENCLOSURE TO THE LPS WITH CLASS II BONDING CONDUCTORS. REFER TO A8/E132 FOR MORE INFORMATION.

19 PROVIDE GROUND INSPECTION WELL. REFER TO DETAIL C8/E603 FOR MORE INFORMATION.

8 0 8 16

Scale: 1/8 INCH = 1 FOOT

FOR OFFICIAL USE ONLY

PUBLIC AVAILABILITY TO BE DETERMINED UNDER 5 USC 552

COMMONWEALTH OF VIRGINIA
MATHIAS M. BECKER
LIC. NO. 029564
9/12/2025
PROFESSIONAL ENGINEER

JACOBS
1100 N GLEBE RD.
SUITE 500
ARLINGTON, VA 22201

REV.	APPROVED DATE	DESCRIPTION	JCN	REDLINE DATE	APVD

DEPARTMENT OF TRANSPORTATION
FEDERAL AVIATION ADMINISTRATION
CENTRAL SERVICE REGION — FT WORTH, TX

LEEVILLE (LEV) VORTAC REPLACEMENT

LIGHTNING PROTECTION AND GROUNDING PLANS

GRAND ISLE — LEEVILLE (LEV) VORTAC — LA

REVIEWED BY | SUBMITTED BY | APPROVED BY

SUBMITTER'S TITLE | APPROVER'S TITLE

DESIGNED BY J. FRIEDBERG
DRAWN BY J. FRIEDBERG
CHECKED BY M. BECKER

ISSUED BY: ENGINEERING SERVICES TERMINAL

DATE: 9/12/2025 JCN: 1508914

DRAWING NO. LEV - D - VORTAC - E131 REV.

LEEVILLE VORTAC
GRAND ISLE LOUISIANA

PLOT DATE/TIME: 9/10/2025 4:01:44 PM

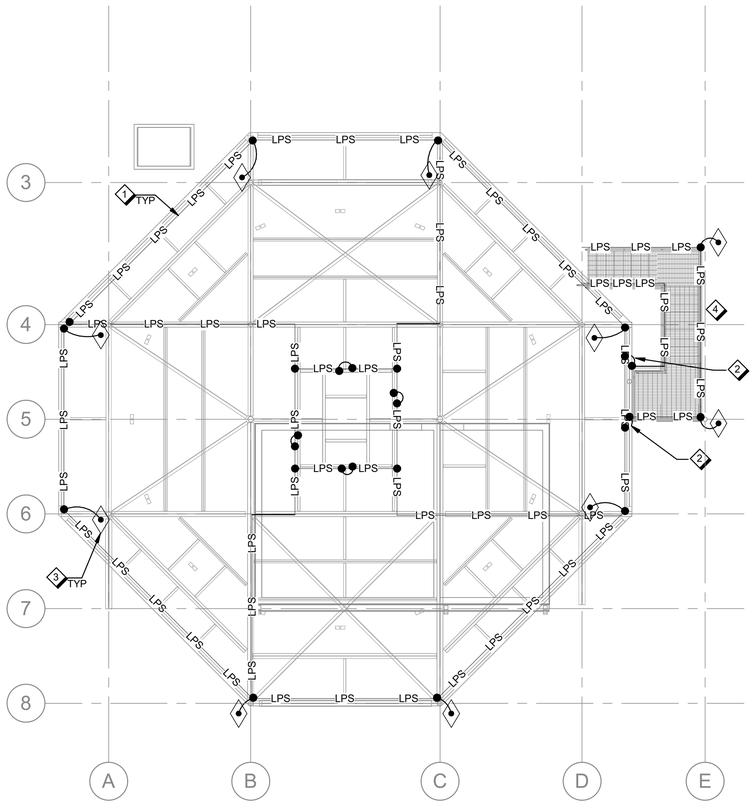

D8 LIGHTNING PROTECTION PLAN - COUNTERPOISE

E132 1/8" = 1'-0"

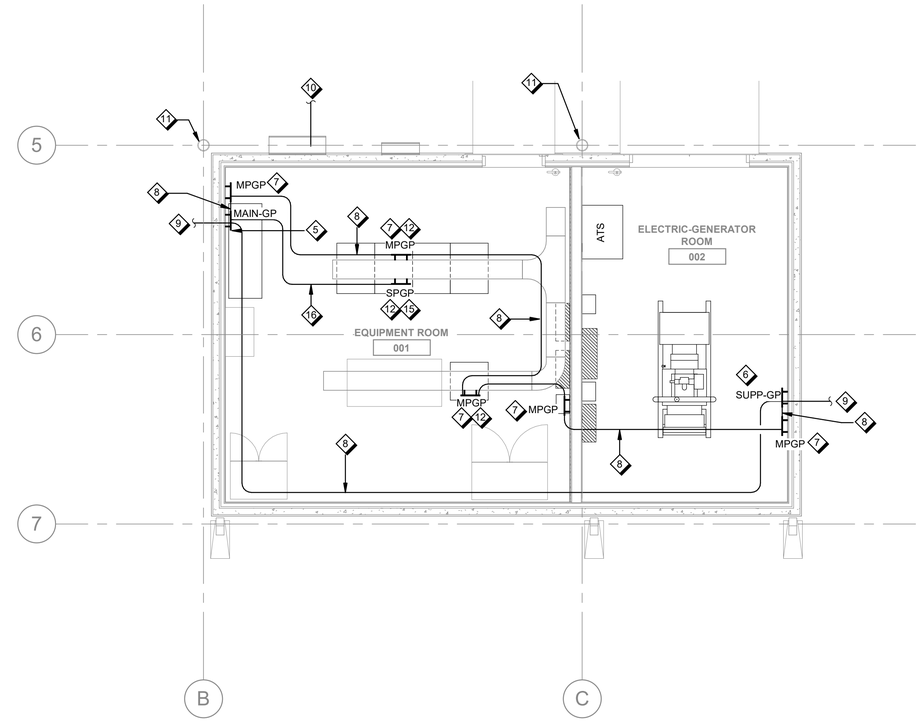

D5 GROUNDING PLAN - SHELTER PLATFORM LEVEL

E132 1/4" = 1'-0"

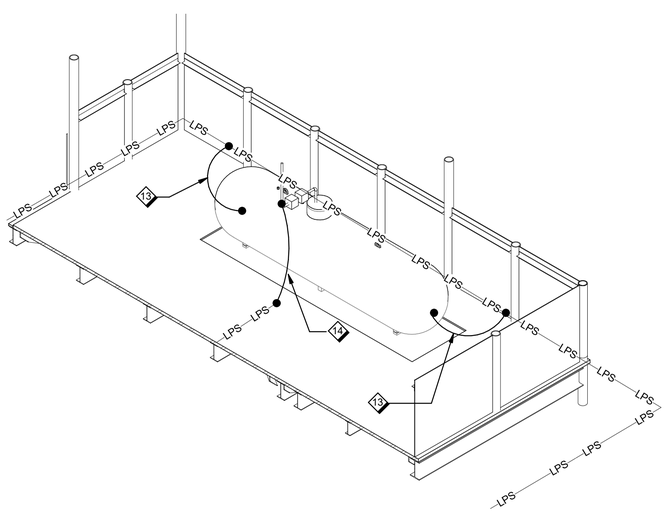

A8 FUEL TANK LIGHTNING PROTECTION DETAIL

E132

GENERAL SHEET NOTES

A. PROVIDE AN EARTH ELECTRODE SYSTEM (EES), GROUNDING AND LIGHTNING PROTECTION SYSTEM (LPS) IN ACCORDANCE WITH THE NEC, NFPA 780 AND FAA-STD-019 (LATEST EDITION). THE LIGHTNING PROTECTION SYSTEM MUST BE PROVIDED IN ACCORDANCE WITH UL STANDARD 96A.

B. ALL EXPOSED METALLIC BODIES, SUCH AS EQUIPMENT ENCLOSURES, MECHANICAL PIPING, HVAC DUCTWORK, AND STAIR RAIL ASSEMBLIES MUST BE BONDED TO THE LIGHTNING PROTECTION SYSTEM.

C. PROVIDE CLASS II GRADE SYSTEM COMPONENTS IN ACCORDANCE WITH FAA-STD-019 (LATEST EDITION) REQUIREMENTS FOR CLASS II SYSTEM INSTALLATIONS.

D. PROVIDE COMMON BONDING OF BUILDING METAL PARTS WHERE REQUIRED PER FAA-STD-019 (LATEST EDITION). BUILDING STEEL, METAL ROOFING, METAL SUPPORTING STRUCTURES, CONCRETE REINFORCING STEEL, SIDING, LADDERS, DUCT, AND SIMILAR METAL PARTS ARE NOT TO BE USED AS SUBSTITUTES FOR ROOF OR DOWN CONDUCTORS.

E. ALL LIGHTNING PROTECTION CONDUCTORS MUST BE ROUTED UNDERNEATH THE PLATFORM SHOWN.

SHEET NOTES

1 ROUTE CLASS II LIGHTNING PROTECTION CONDUCTOR ALONG THE PERIMETER UNDERNEATH THE COUNTERPOISE STEEL STRUCTURAL PLATFORM.

2 EXTEND BUILDING ROOF LPS CONDUCTOR TO STAIR STEEL STRUCTURAL PLATFORM CONDUCTOR LPS LOOP.

3 PROVIDE DOWN CONDUCTOR. ROUTE DOWN CONDUCTOR ALONG THE STRUCTURAL STEEL COLUMN TO THE EES. REFER TO DRAWING E131 DRAWING FOR LPS CONTINUATION.

4 REFER TO DETAIL A8/E302 FOR STAIRWELL BONDING.

5 PROVIDE MAIN GROUND PLATE.

6 PROVIDE SUPPLEMENTAL GROUND PLATE.

7 PROVIDE MULTIPOINT GROUND PLATE.

8 PROVIDE 1-#4/0 AWG CONDUCTOR, COLOR-CODED GREEN WITH AN ORANGE TRACER.

9 PROVIDE 1-500 kCMIL CONDUCTOR, COLOR-CODED GREEN WITH RED TRACERS, TO EES. BOND TO GROUND ROD WITH AN EXOTHERMIC WELD.

10 PROVIDE #2 AWG BARE COPPER CONDUCTOR AND #4/0 AWG INSULATED COPPER CONDUCTOR, COLOR-CODED GREEN, FROM VOR CABLE EXTERNAL METAL ENCLOSURE TO EES. EXOTHERMICALLY WELD #2 AWG CONDUCTOR TO WIREWAY ENCLOSURE. SEAL BOND TO THE STEEL FRAME WITH AN APPROPRIATE CORROSION INHIBITOR.

11 BOND BUILDING COLUMN TO EES WITH #4/0 AWG COPPER CONDUCTOR. REFER TO DRAWING E131 FOR MORE INFORMATION.

12 MOUNT GROUND PLATE TO CEILING.

13 BOND THE FUEL TANK ENCLOSURE TO THE LPS WITH CLASS II BONDING CONDUCTORS.

14 BOND FUEL TANK PIPING TO LPS WITH A CLASS II BONDING CONDUCTOR.

15 PROVIDE SINGLE POINT GROUND PLATE.

16 PROVIDE 1-#4/0 AWG CONDUCTOR, COLOR-CODED GREEN WITH A YELLOW TRACER.

8 0 8 16
Scale: 1/8 INCH = 1 FOOT
4 0 4 8
Scale: 1/4 INCH = 1 FOOT

N

FOR OFFICIAL USE ONLY
PUBLIC AVAILABILITY TO BE DETERMINED UNDER 5 USC 552

COMMONWEALTH OF VIRGINIA
MATHIAS M. BECKER
LIC. NO. 029564
9/12/2025
PROFESSIONAL ENGINEER

JACOBS
1100 N GLEBE RD.
SUITE 500
ARLINGTON, VA 22201

REV.	APPROVED DATE	DESCRIPTION	JCN	REDLINE DATE	APVD

Jacobs

DEPARTMENT OF TRANSPORTATION
FEDERAL AVIATION ADMINISTRATION
CENTRAL SERVICE REGION — FT WORTH, TX

LEEVILLE (LEV) VORTAC REPLACEMENT

LIGHTNING PROTECTION AND GROUNDING PLANS

GRAND ISLE — LEEVILLE (LEV) VORTAC — LA

REVIEWED BY | SUBMITTED BY | APPROVED BY
SUBMITTER'S TITLE | APPROVER'S TITLE

LEEVILLE VORTAC
GRAND ISLE LOUISIANA

DESIGNED BY J. FRIEDBERG
DRAWN BY J. FRIEDBERG
CHECKED BY M. BECKER
ISSUED BY ENGINEERING SERVICES TERMINAL
DATE 9/12/2025 JCN: 1508914
DRAWING NO. LEV - D - VORTAC - E132 REV.

PLOT DATE/TIME: 9/10/2025 4:01:45 PM

GENERAL SHEET NOTES

A. CONDUIT ROUTING IS DIAGRAMMATICALLY SHOWN. CONTRACTOR TO FIELD VERIFY EXISTING CONDITIONS AND PROVIDE ROUTING PLAN FOR FAA COR APPROVAL.

B. REFER TO POWER ONE-LINE DIAGRAM FOR FEEDER SCHEDULE AND EQUIPMENT CONNECTION INFORMATION.

C. REFER TO DRAWING E402 FOR ADDITIONAL CONDUIT ROUTING INFORMATION.

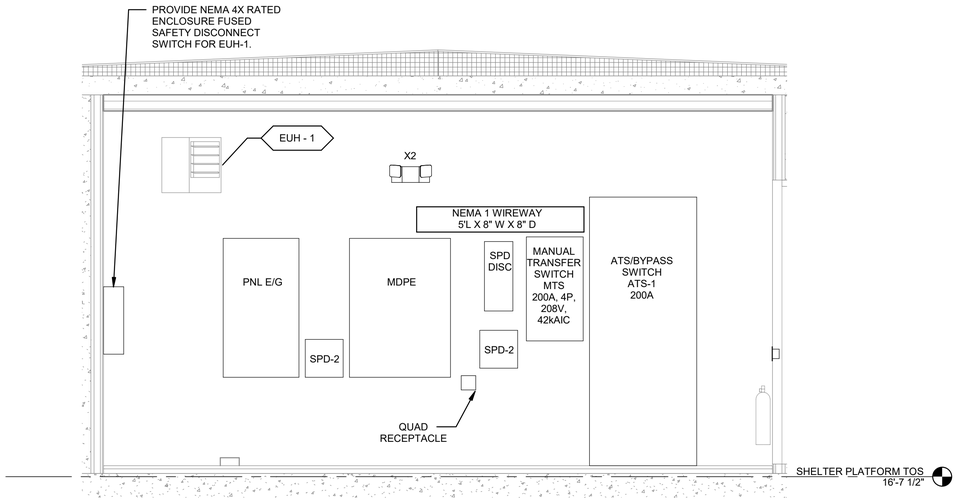

F8 E301 E/G ROOM WEST WALL

1/2" = 1'-0"

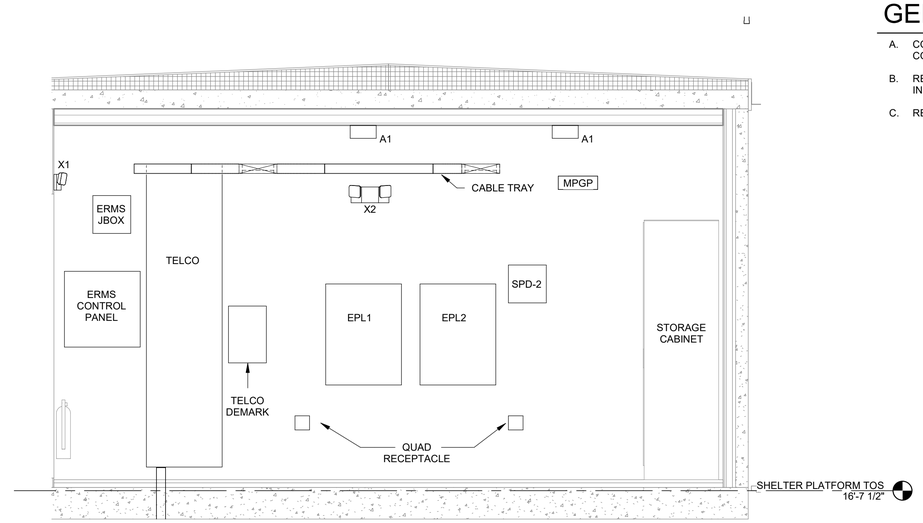

F5 E301 EQUIPMENT ROOM EAST WALL

1/2" = 1'-0"

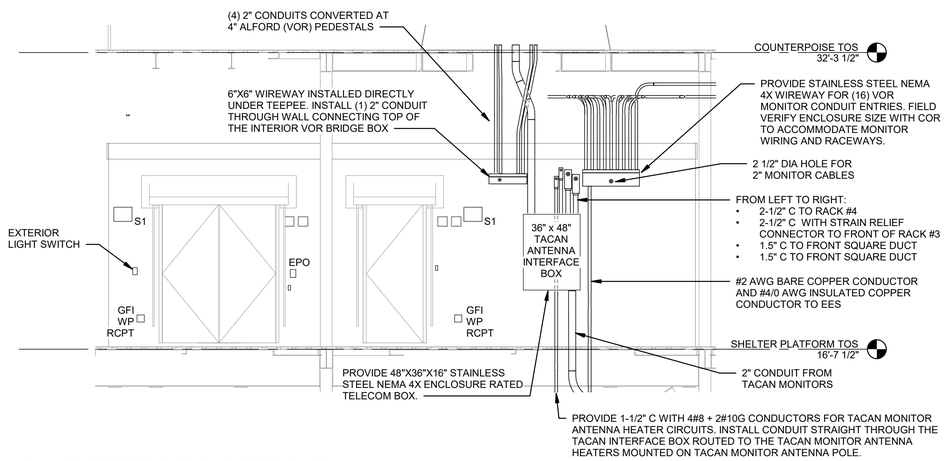

C8 E301 EXTERIOR NORTH WALL

1/4" = 1'-0"

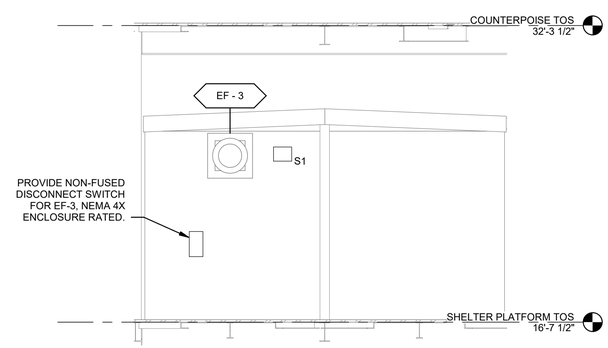

C5 E301 EXTERIOR EAST WALL

1/4" = 1'-0"

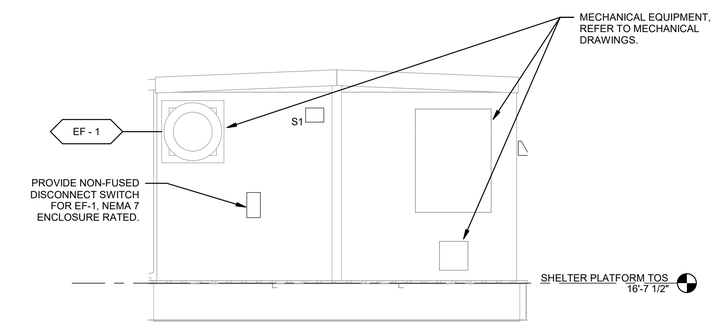

C3 E301 EXTERIOR WEST WALL

1/4" = 1'-0"

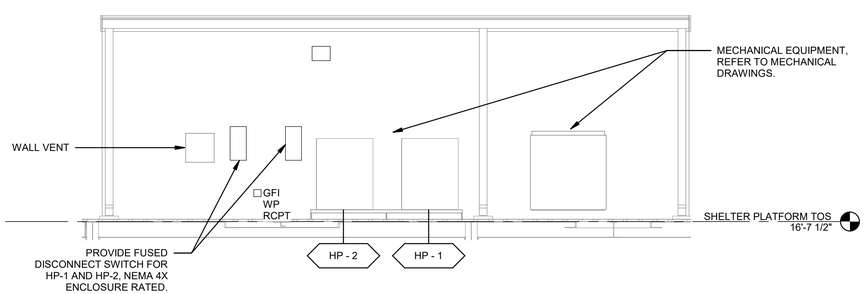

A8 E301 EXTERIOR SOUTH WALL

1/4" = 1'-0"

4 0 4 8
Scale: 1/4 INCH = 1 FOOT

2 0 2 4
Scale: 1/2 INCH = 1 FOOT

FOR OFFICIAL USE ONLY
PUBLIC AVAILABILITY TO BE DETERMINED UNDER 5 USC 552

JACOBS
1100 N GLEBE RD.
SUITE 500
ARLINGTON, VA 22201

REV.	APPROVED DATE	DESCRIPTION	JCN	REDLINE DATE	APVD

COMMONWEALTH OF VIRGINIA
MATHIAS M. BECKER
LIC. NO. 029564
9/12/2025
PROFESSIONAL ENGINEER

Jacobs

DEPARTMENT OF TRANSPORTATION
FEDERAL AVIATION ADMINISTRATION
CENTRAL SERVICE REGION — FT WORTH, TX

LEEVILLE (LEV) VORTAC REPLACEMENT

ELECTRICAL SECTIONS

GRAND ISLE — LEEVILLE (LEV) VORTAC — LA

LEEVILLE VORTAC
GRAND ISLE LOUISIANA

REVIEWED BY	SUBMITTED BY		APPROVED BY
	SUBMITTER'S TITLE		APPROVER'S TITLE
	DESIGNED BY D. RUSTAMOVA	ISSUED BY ENGINEERING SERVICES TERMINAL	DATE 9/12/2025 — JCN: 1508914
	DRAWN BY D. RUSTAMOVA		DRAWING NO. LEV - D - VORTAC - E301 — REV.
	CHECKED BY M. BECKER		

PLOT DATE/TIME: 9/10/2025 4:01:46 PM

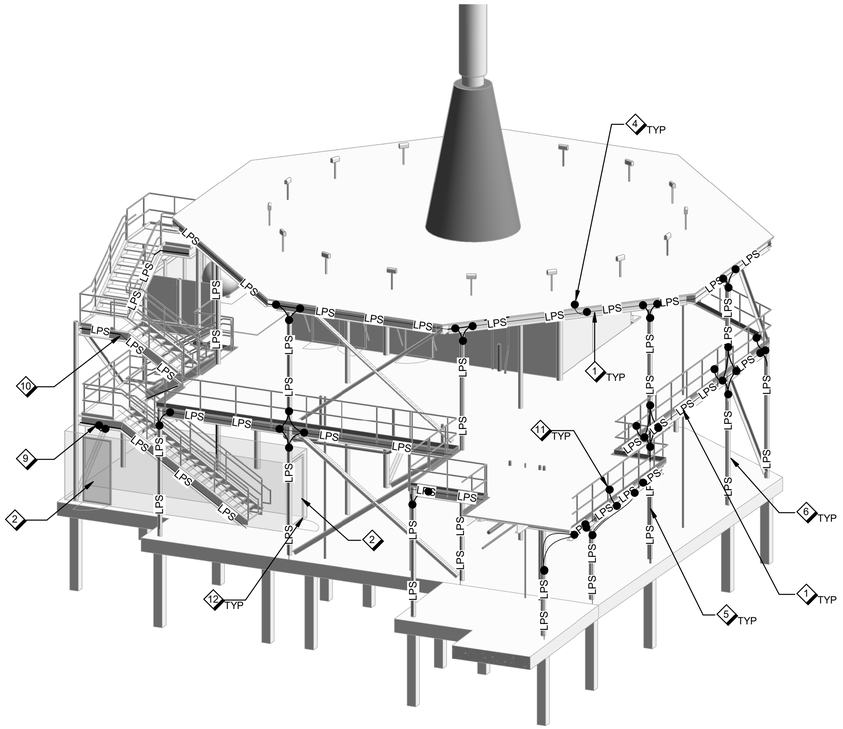

D8 LPS - ISOMETRIC NORTH VIEW
E302

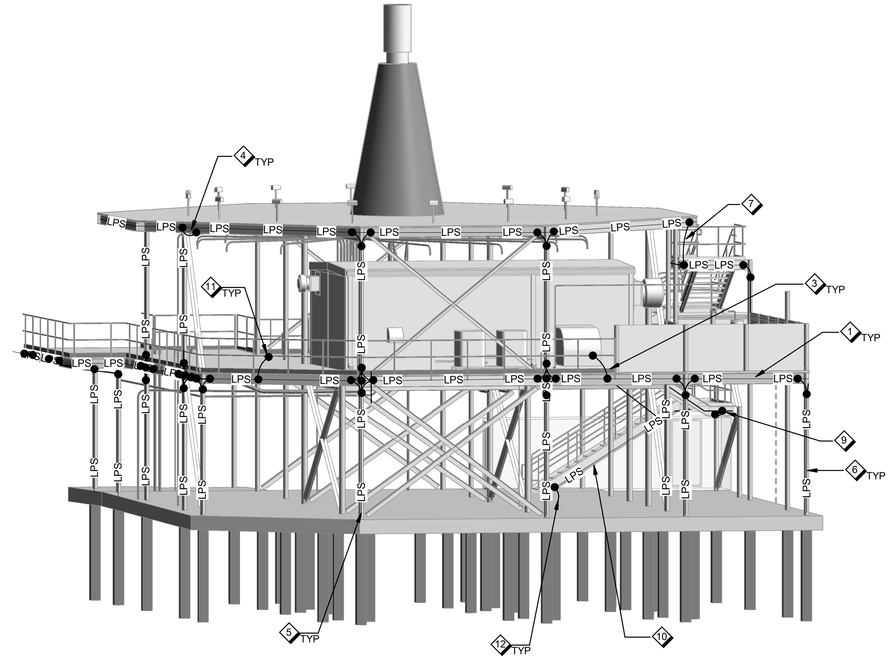

D5 LPS - ISOMETRIC SOUTH VIEW
E302

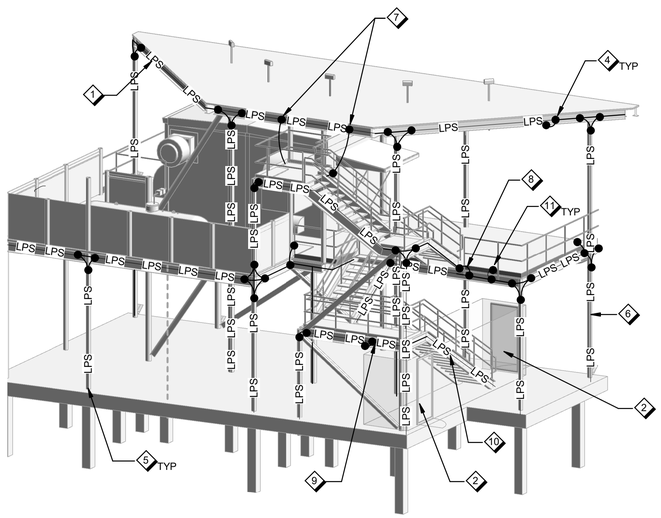

A8 LPS - ISOMETRIC STAIRWELL VIEW
E302

GENERAL SHEET NOTES

A. PROVIDE AN EARTH ELECTRODE SYSTEM (EES), GROUNDING AND LIGHTNING PROTECTION SYSTEM (LPS) IN ACCORDANCE WITH THE NEC, NFPA 780 AND FAA-STD-019 (LATEST EDITION). THE LIGHTNING PROTECTION SYSTEM MUST BE PROVIDED IN ACCORDANCE WITH UL STANDARD 96A.

B. ALL EXPOSED METALLIC BODIES, SUCH AS EQUIPMENT ENCLOSURES, MECHANICAL PIPING, HVAC DUCTWORK, AND STAIR RAIL ASSEMBLIES MUST BE BONDED TO THE LIGHTNING PROTECTION SYSTEM.

C. PROVIDE CLASS II GRADE SYSTEM COMPONENTS IN ACCORDANCE WITH FAA-STD-019 (LATEST EDITION) REQUIREMENTS FOR CLASS II SYSTEM INSTALLATIONS.

D. PROVIDE COMMON BONDING OF BUILDING METAL PARTS WHERE REQUIRED PER FAA-STD-019 (LATEST EDITION). BUILDING STEEL, METAL ROOFING, METAL SUPPORTING STRUCTURES, CONCRETE REINFORCING STEEL, SIDING, LADDERS, DUCT, AND SIMILAR METAL PARTS ARE NOT TO BE USED AS SUBSTITUTES FOR ROOF OR DOWN CONDUCTORS.

E. REFER TO LPS AND GROUNDING CONNECTION DETAILS ON DRAWING E601 FOR ADDITIONAL REQUIREMENTS.

F. REFER TO DRAWING E805 FOR FACILITY SIGNAL REFERENCE STRUCTURE GROUNDING RISER DIAGRAM.

G. THE TACAN MONITOR ANTENNA TOWER AND ASSOCIATED LIGHTNING PROTECTION SYSTEM CONNECTIONS ARE NOT SHOWN FOR CLARITY.

SHEET NOTES ◇

1 ROUTE CLASS II LIGHTNING PROTECTION CONDUCTOR ALONG THE PERIMETER OF THE UNDERSIDE OF THE STEEL STRUCTURAL PLATFORM.

2 PROVIDE A HORIZONTAL #6 AWG BARE STRANDED TINNED COPPER CONDUCTOR THREADED CONTINUOUSLY THROUGH THE GATE FABRIC AND MECHANICALLY BONDED TO THE GATE VERTICAL SUPPORT RAILS.

3 BOND ALL METALLIC OBJECTS WITHIN 6 FEET OF THE LPS TO THE LPS.

4 BOND THE LPS CONDUCTOR TO THE PLATFORM GRADING WITH EXOTHERMIC WELDS.

5 ROUTE DOWN CONDUCTOR TO EES. PROVIDE SCHEDULE 80 PVC CONDUIT FROM GRADE TO 10 FEET ABOVE GRADE FOR DOWN CONDUCTORS. REFER TO DRAWING D6/E131 FOR GROUNDING PLAN CONTINUATION.

6 ROUTE DOWN CONDUCTOR ALONG THE STRUCTURAL STEEL COLUMN.

7 EXTEND STAIR CONDUCTOR LOOP TO UPPER LEVEL LPS CONDUCTOR LOOP.

8 EXTEND STAIR CONDUCTOR LOOP TO LOWER LEVEL LPS CONDUCTOR LOOP.

9 BOND STAIR STEEL TO CONDUCTOR ALONG STAIR WITH A CLASS II BONDING CONDUCTOR.

10 ROUTE LPS CONDUCTOR ALONG STAIRWELL ON BOTH SIDES.

11 BOND HANDRAIL STEEL TO PERIMETER LPS CONDUCTOR EVERY 20 FEET.

12 BOND CORNER POSTS AND GATE POSTS OF SECURITY FENCE TO A GROUND ROD WITH EXOTHERMICALLY WELDED #4/0 AWG BARE COPPER CONDUCTORS.

FOR OFFICIAL USE ONLY
PUBLIC AVAILABILITY TO BE DETERMINED UNDER 5 USC 552

COMMONWEALTH OF VIRGINIA
MATHIAS M. BECKER
LIC. NO. 029564
9/12/2025
PROFESSIONAL ENGINEER

JACOBS
1100 N GLEBE RD.
SUITE 500
ARLINGTON, VA 22201

REV.	APPROVED DATE	DESCRIPTION	JCN	REDLINE DATE	APVD

Jacobs

DEPARTMENT OF TRANSPORTATION
FEDERAL AVIATION ADMINISTRATION
CENTRAL SERVICE REGION — FT WORTH, TX

LEEVILLE (LEV) VORTAC REPLACEMENT

ELECTRICAL SECTIONS

GRAND ISLE — LEEVILLE (LEV) VORTAC — LA

REVIEWED BY | SUBMITTED BY | APPROVED BY
SUBMITTER'S TITLE | APPROVER'S TITLE

LEEVILLE VORTAC
GRAND ISLE LOUISIANA

DESIGNED BY J. FRIEDBERG
DRAWN BY J. FRIEDBERG
CHECKED BY M. BECKER
ISSUED BY ENGINEERING SERVICES TERMINAL
DATE 9/12/2025
JCN: 1508914
DRAWING NO. LEV - D - VORTAC - E302
REV.

PLOT DATE/TIME: 9/10/2025 4:01:48 PM

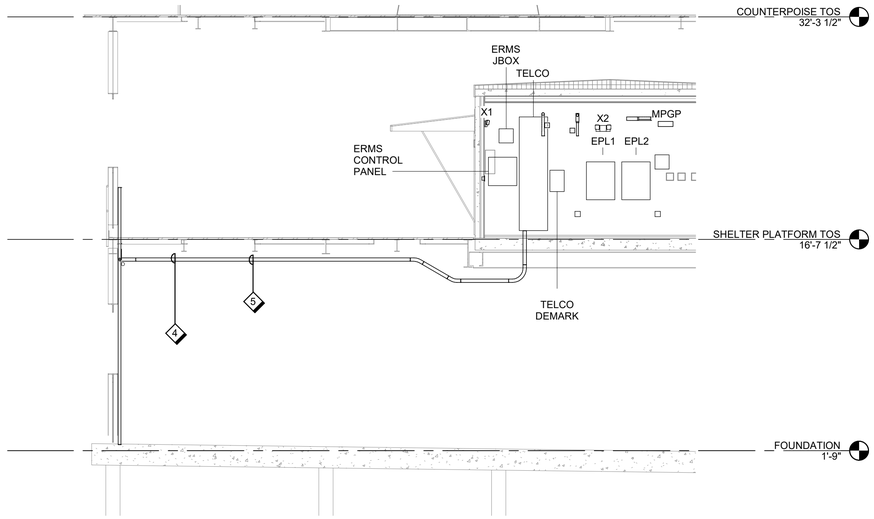

F8 / E303 EXTERIOR TELECOM CONDUIT ROUTING

3/16" = 1'-0"

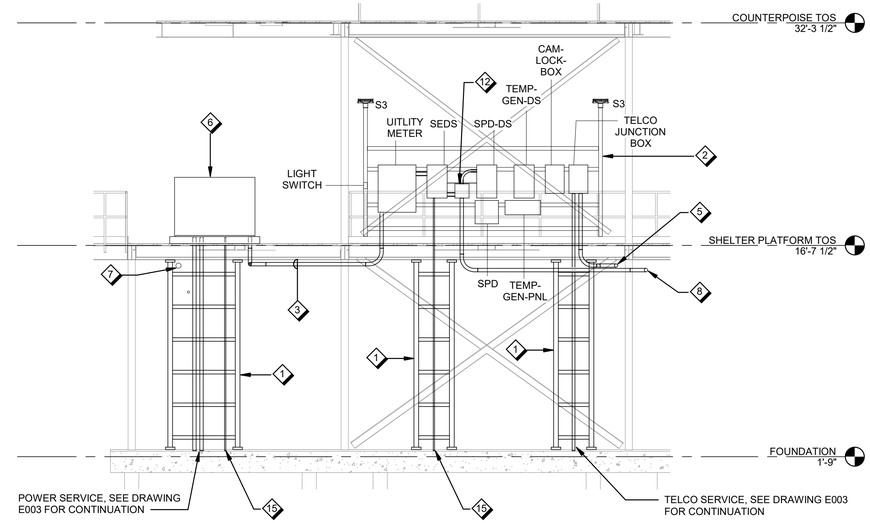

F5 / E303 EXTERIOR TRANSFORMER SECONDARY CONDUIT ROUTING

3/16" = 1'-0"

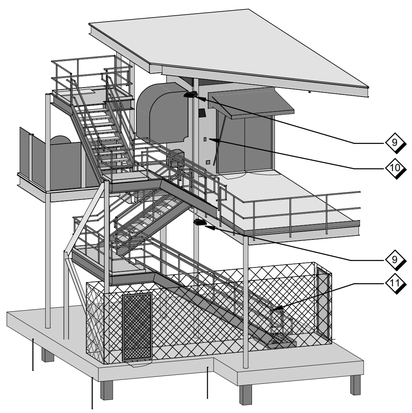

C8 / E303 STAIRWELL LIGHTING - ISOMETRIC VIEW

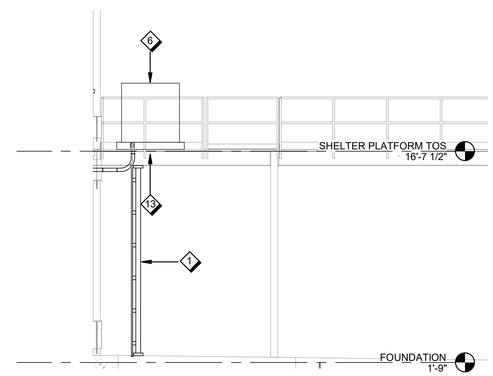

C5 / E303 EXTERIOR TRANSFORMER PRIMARY CONDUIT ROUTING

3/16" = 1'-0"

GENERAL SHEET NOTES

A. CONDUIT ROUTING IS DIAGRAMMATICALLY SHOWN. CONTRACTOR TO FIELD VERIFY EXISTING CONDITIONS AND PROVIDE ROUTING PLAN FOR FAA COR APPROVAL.

B. REFER TO POWER ONE-LINE DIAGRAM FOR FEEDER SCHEDULE AND EQUIPMENT CONNECTION INFORMATION.

SHEET NOTES

1 ROUTE POWER CIRCUITRY CONDUITS VERTICALLY TO UNDERSIDE OF EQUIPMENT. REFER TO STRUCTURAL FOR CONDUIT SUPPORT INFORMATION.

2 SLOTTED CHANNEL FRAMING SYSTEM MOUNTED TO STRUCTURE.

3 ROUTE TRANSFORMER SECONDARY CONDUIT TO SERVICE ENTRANCE DISCONNECT SWITCH HORIZONTALLY UNDER THE SHELTER PLATFORM LEVEL STRUCTURAL PLATFORM. PROVIDE METAL CHANNEL FRAMING SYSTEM TO ATTACH CONDUIT SYSTEMS TO THE VOR STRUCTURE.

4 ROUTE TELECOM CONDUITS ALONG VOR STRUCTURAL STEEL COLUMN AND BEAM MEMBERS. PROVIDE METAL CHANNEL FRAMING SYSTEM TO ATTACH CONDUIT SYSTEMS TO THE VOR STRUCTURE.

5 ROUTE TELECOM CONDUIT TO ELECTRONIC EQUIPMENT ROOM HORIZONTALLY UNDER THE SHELTER PLATFORM LEVEL STRUCTURAL PLATFORM. PROVIDE METAL CHANNEL FRAMING SYSTEM TO ATTACH CONDUIT SYSTEMS TO THE VOR STRUCTURE.

6 TRANSFORMER EQUIPMENT TO BE PROVIDED AND INSTALLED BY THE ELECTRIC UTILITY. REFER TO DETAIL A8/E604 FOR ADDITIONAL INFORMATION.

7 ROUTE TELECOM CONDUIT FROM TACAN MONITOR TOWER TO TACAN ANTENNA INTERFACE BOX.

8 ROUTE CONDUIT TO ATS, REFER TO ONE-LINE DIAGRAM FOR ADDITIONAL INFORMATION.

9 PROVIDE STRUCTURAL COLUMN SURFACE MOUNTED LIGHT FIXTURE WITH BALLISTIC RESISTANT SHIELD TO ILLUMINATE THE STAIR LANDING.

10 PROVIDE MANUAL ON/OFF THREE-WAY SWITCH TO CONTROL EXTERIOR LIGHTING.

11 PROVIDE A MANUAL ON/OFF THREE-WAY SWITCH TO CONTROL THE EXTERIOR LIGHTING AT THE ENTRANCE OF THE STAIRWELL. MOUNT THE THREE-WAY SWITCH ON THE SIDE OF THE STAIRWELL RAIL.

12 PROVIDE JUNCTION BOX FOR SPLICING OF CONDUCTOR FOR SPD FEED. REFER TO DETAIL E8/E605 FOR MORE INFORMATION.

13 PRIMARY AND SECONDARY WINDOW MUST BE ENCLOSED SO NO PERSON OR OBJECT CAN ACCESS THE INTERIOR OF THE TRANSFORMER. CONTRACTOR FURNISHED, INSTALLED AND MAINTAINED ENTERGY APPROVED PLATE BAFFLE/BARRIER OR FENCE REQUIRED. THE BARRIER OR GATE MUST BE DESIGNED TO BE LOCKABLE BY ENTERGY LOCK AND EASILY REMOVABLE BY ENTERGY PERSONNEL FOR MAINTENANCE.

14 EXTEND SLOTTED CHANNEL FRAMING SYSTEM SUPPORT RACK FOR LIGHT FIXTURE MOUNTING. MOUNT FIXTURE 10 FEET ABOVE SHELTER PLATFORM LEVEL.

15 PROVIDE A #4/0 AWG ELECTRICAL SERVICE GROUNDING ELECTRODE CONDUCTOR IN SCHEDULE 80 PVC CONDUIT, EXTEND AND CONNECT TO A GROUND ROD AT EARTH ELECTRODE SYSTEM.

4 0 4 8 12

Scale: 3/16 INCH = 1 FOOT

FOR OFFICIAL USE ONLY

PUBLIC AVAILABILITY TO BE DETERMINED UNDER 5 USC 552

COMMONWEALTH OF VIRGINIA
MATHIAS M. BECKER
LIC. NO. 029564
9/12/2025
PROFESSIONAL ENGINEER

JACOBS
1100 N GLEBE RD.
SUITE 500
ARLINGTON, VA 22201

REV.	APPROVED DATE	DESCRIPTION	JCN	REDLINE DATE	APVD

Jacobs

DEPARTMENT OF TRANSPORTATION
FEDERAL AVIATION ADMINISTRATION
CENTRAL SERVICE REGION — FT WORTH, TX

LEEVILLE (LEV) VORTAC REPLACEMENT

ELECTRICAL SECTIONS

GRAND ISLE — LEEVILLE (LEV) VORTAC — LA

REVIEWED BY	SUBMITTED BY	APPROVED BY
	SUBMITTER'S TITLE	APPROVER'S TITLE

LEEVILLE VORTAC
GRAND ISLE LOUISIANA

DESIGNED BY D. RUSTAMOVA
DRAWN BY D. RUSTAMOVA
CHECKED BY M. BECKER

ISSUED BY: ENGINEERING SERVICES TERMINAL

DATE 9/12/2025 JCN: 1508914

DRAWING NO. LEV - D - VORTAC - E303 REV.

PLOT DATE/TIME: 9/10/2025 4:01:50 PM

GENERAL SHEET NOTES

A. DRAWING SHOWS GRAPHICAL LOCATION OF TACAN MONITOR ANTENNA MOUNTING PLATES ON THE TACAN MONITOR ANTENNA TOWER BASED ON EXTENDING 2 DEGREE AND -2 DEGREE LINES FROM THE CENTER OF THE VOR TACAN ANTENNA TO THE TOWER. COORDINATE FINAL LOCATION OF TACAN MONITOR ANTENNA MOUNTING PLATES WITH THE COR.

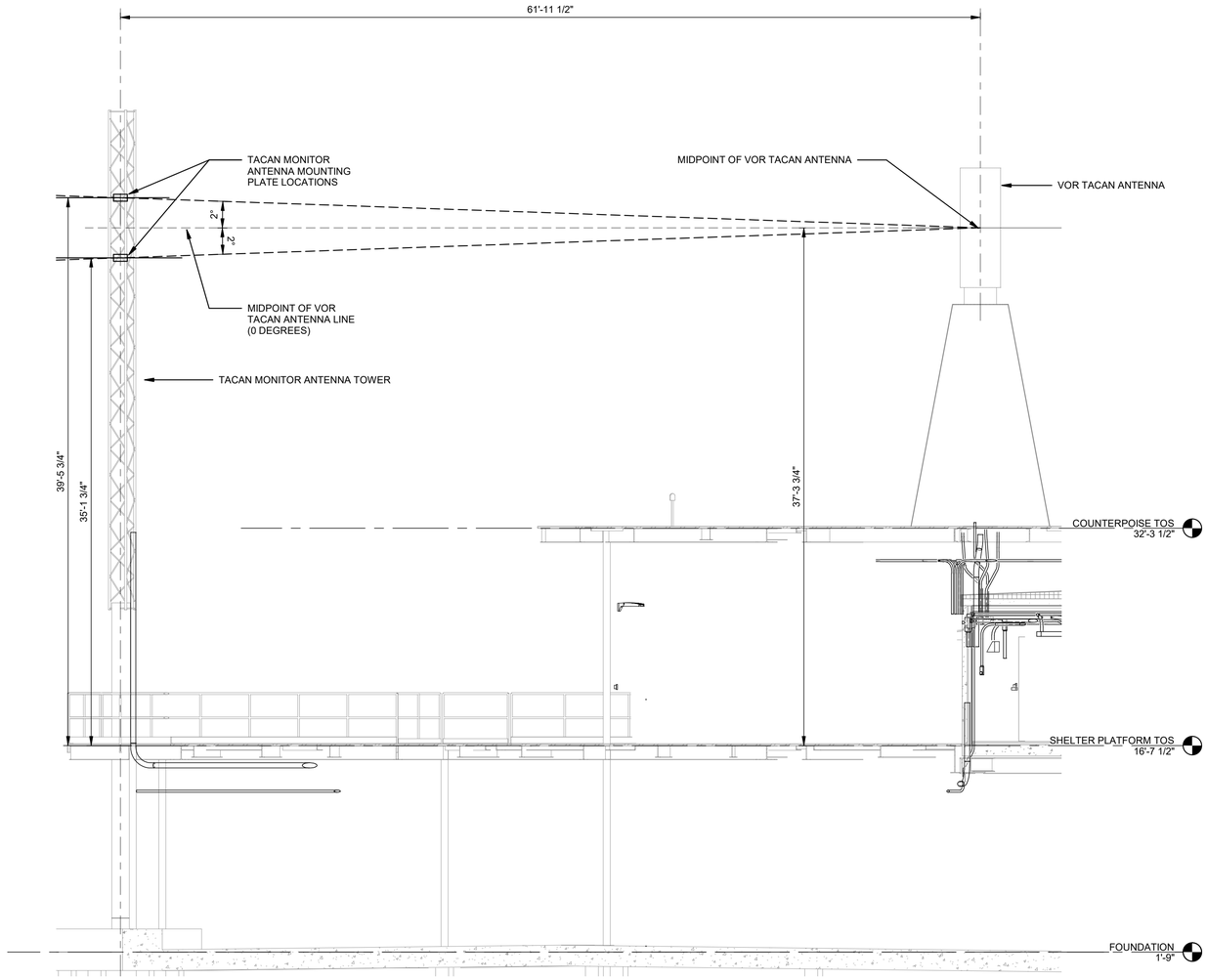

C8 / E304 TACAN MONITOR ANTENNA MOUNTING PLATE LOCATION

3/16" = 1'-0"

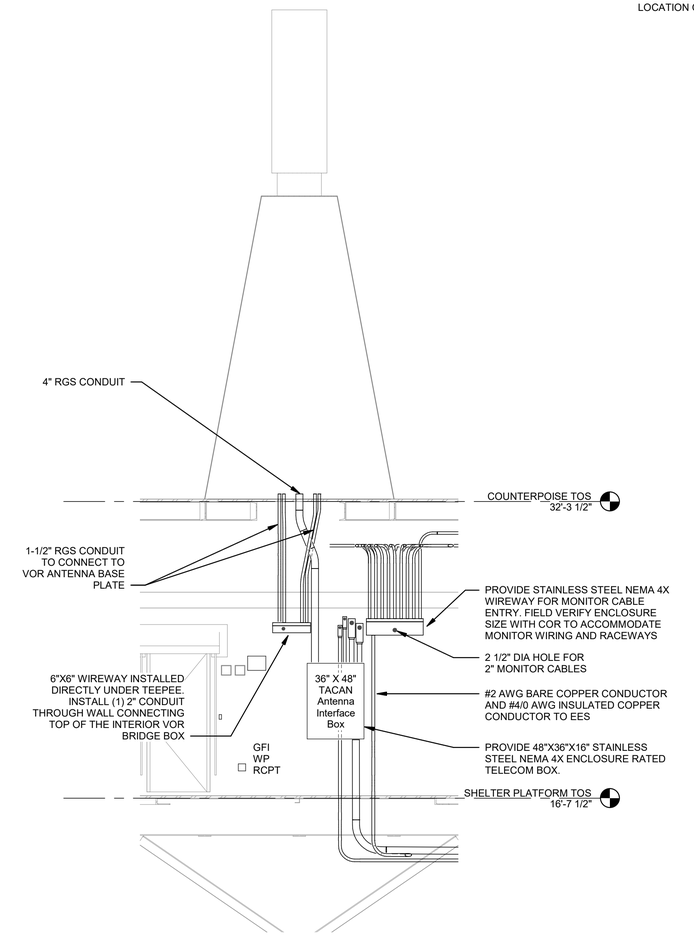

C4 / E304 VOR ANTENNA CONDUIT RISER THRU BLDG ROOF

1/4" = 1'-0"

4 0 4 8
Scale: 1/4 INCH = 1 FOOT

4 0 4 8 12
Scale: 3/16 INCH = 1 FOOT

FOR OFFICIAL USE ONLY
PUBLIC AVAILABILITY TO BE DETERMINED UNDER 5 USC 552

COMMONWEALTH OF VIRGINIA
MATHIAS M. BECKER
LIC. NO. 029564
9/12/2025
PROFESSIONAL ENGINEER

JACOBS
1100 N GLEBE RD.
SUITE 500
ARLINGTON, VA 22201

REV.	APPROVED DATE	DESCRIPTION	JCN	REDLINE DATE	APVD

Jacobs

DEPARTMENT OF TRANSPORTATION
FEDERAL AVIATION ADMINISTRATION
CENTRAL SERVICE REGION — FT WORTH, TX

LEEVILLE (LEV) VORTAC REPLACEMENT

ELECTRICAL SECTIONS

GRAND ISLE — LEEVILLE (LEV) VORTAC — LA

REVIEWED BY | SUBMITTED BY | APPROVED BY
SUBMITTER'S TITLE | APPROVER'S TITLE

LEEVILLE VORTAC
GRAND ISLE LOUISIANA

DESIGNED BY D. RUSTAMOVA
DRAWN BY D. RUSTAMOVA
CHECKED BY M. BECKER
ISSUED BY ENGINEERING SERVICES TERMINAL
DATE 9/12/2025 JCN 1508914
DRAWING NO. LEV - D - VORTAC - E304
REV.

PLOT DATE/TIME: 9/10/2025 4:01:51 PM

GENERAL SHEET NOTES

A. CONDUIT ROUTING IS DIAGRAMMATICALLY SHOWN. CONTRACTOR TO FIELD VERIFY EXISTING CONDITIONS AND PROVIDE ROUTING PLAN FOR FAA COR APPROVAL.

B. REFER TO POWER ONE-LINE DIAGRAM FOR FEEDER SCHEDULE AND EQUIPMENT CONNECTION INFORMATION.

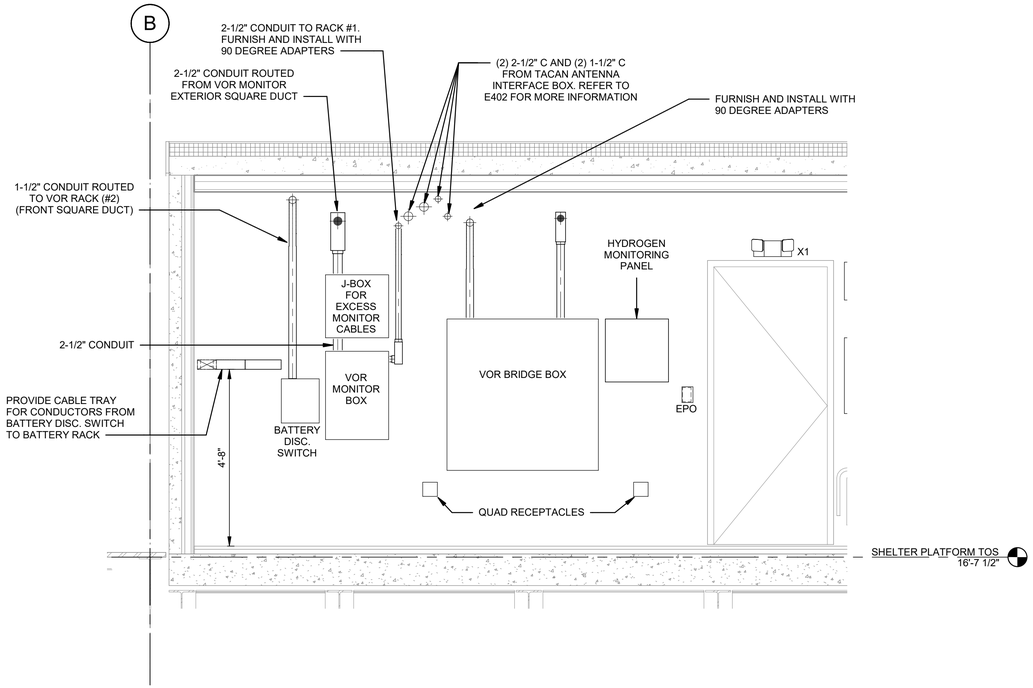

E8 / E305 EQUIPMENT ROOM NORTH WALL

1/2" = 1'-0"

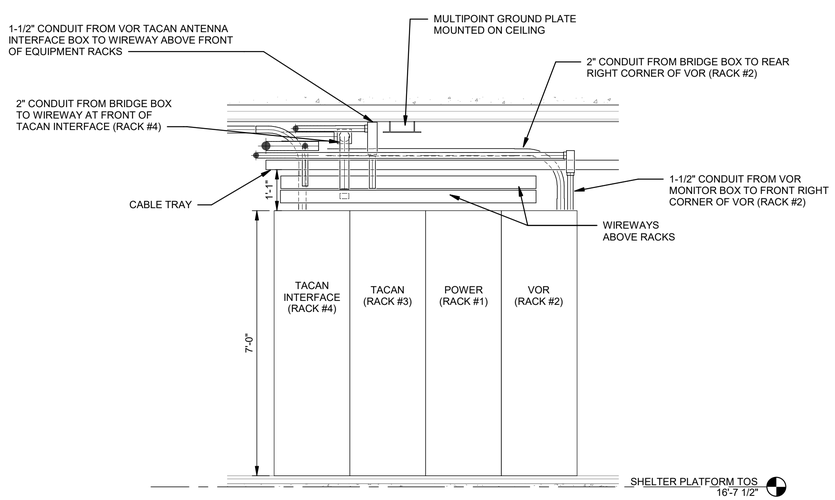

A8 / E305 VORTAC EQUIPMENT RACKS ELEVATION

1/2" = 1'-0"

FOR OFFICIAL USE ONLY

PUBLIC AVAILABILITY TO BE DETERMINED UNDER 5 USC 552

COMMONWEALTH OF VIRGINIA
MATHIAS M. BECKER
LIC. NO. 029564
9/12/2025
PROFESSIONAL ENGINEER

JACOBS
1100 N GLEBE RD.
SUITE 500
ARLINGTON, VA 22201

REV.	APPROVED DATE	DESCRIPTION	JCN	REDLINE DATE	APVD

Jacobs

DEPARTMENT OF TRANSPORTATION
FEDERAL AVIATION ADMINISTRATION
CENTRAL SERVICE REGION — FT WORTH, TX

LEEVILLE (LEV) VORTAC REPLACEMENT

ELECTRICAL SECTIONS

GRAND ISLE — LEEVILLE (LEV) VORTAC — LA

REVIEWED BY | SUBMITTED BY | APPROVED BY
SUBMITTER'S TITLE | APPROVER'S TITLE

LEEVILLE VORTAC
GRAND ISLE LOUISIANA

DESIGNED BY: J. FRIEDBERG
DRAWN BY: J. FRIEDBERG
CHECKED BY: M. BECKER
ISSUED BY: ENGINEERING SERVICES TERMINAL
DATE: 9/12/2025
JCN: 1508914
DRAWING NO.: LEV - D - VORTAC - E305
REV.

PLOT DATE/TIME: 9/10/2025 4:01:51 PM

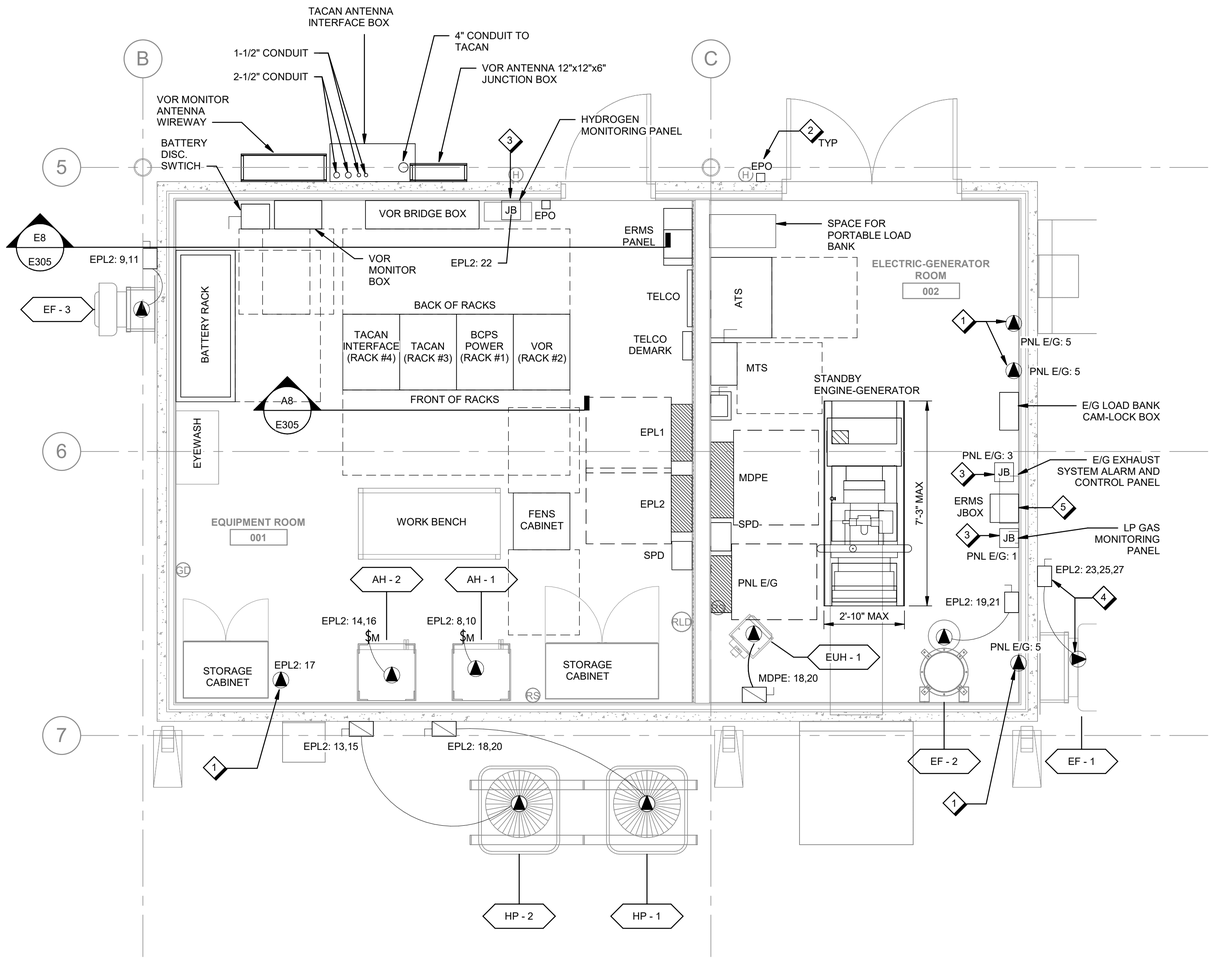

A8 / E401 ENLARGED ELECTRICAL PLAN - MECHANICAL CONNECTIONS

3/8" = 1'-0"

GENERAL SHEET NOTES

A. COORDINATE LOCATION OF OUTLETS AND DEVICES WITH OTHER DISCIPLINES. REFER TO ARCHITECTURAL AND MECHANICAL ELEVATIONS, DETAILS, AND MOUNTING INSTALLATION INFORMATION. NOTIFY COR OF ANY DISCREPANCIES BEFORE INSTALLATION OF ANY CONDUIT, OUTLET BOXES, AND/OR SUPPORTING HARDWARE.

B. REFER TO DRAWING E551 FOR MECHANICAL EQUIPMENT CONNECTION SCHEDULE.

C. PROVIDE NEMA 4X, TYPE 316 STAINLESS STEEL ENCLOSURES FOR ALL EXTERIOR MOUNTED EQUIPMENT UNLESS OTHERWISE INDICATED.

D. DASHED LINES SHOW REQUIRED CLEARANCE AREAS IN FRONT OF ELECTRICAL EQUIPMENT. PROVIDE CLEARANCE FOR ALL ELECTRICAL EQUIPMENT IN ACCORDANCE WITH THE NEC.

SHEET NOTES ◇

1 PROVIDE 120V POWER FOR MECHANICAL CONTROL DAMPER. REFER TO MECHANICAL DRAWINGS FOR LOCATION.
2 PROVIDE EMERGENCY POWER OFF SWITCH.
3 PROVIDE 120V DEDICATED POWER FOR MECHANICAL CONTROL PANEL. REFER TO MECHANICAL DRAWINGS FOR LOCATION.
4 PROVIDE NEMA 7 ENCLOSURE RATED PER NEC ARTICLE 500, CLASS 1, DIVISION 2, GROUP D APPLICATION CERTIFICATION FOR POWER CIRCUIT CONNECTIONS TO THE MECHANICAL PROPANE EXHAUST VENTILATION SYSTEM.
5 PROVIDE NEMA 4X RATED ENCLOSURE FOR ERMS JUNCTION BOX.

Scale: 3/8 INCH = 1 FOOT

FOR OFFICIAL USE ONLY
PUBLIC AVAILABILITY TO BE DETERMINED UNDER 5 USC 552

JACOBS
1100 N GLEBE RD.
SUITE 500
ARLINGTON, VA 22201

REV.	APPROVED DATE	DESCRIPTION	JCN	REDLINE DATE	APVD

COMMONWEALTH OF VIRGINIA
MATHIAS M. BECKER
LIC. NO. 029564
9/12/2025
PROFESSIONAL ENGINEER

Jacobs

DEPARTMENT OF TRANSPORTATION
FEDERAL AVIATION ADMINISTRATION
CENTRAL SERVICE REGION — FT WORTH, TX

LEEVILLE (LEV) VORTAC REPLACEMENT

ELECTRICAL ENLARGED POWER PLANS

GRAND ISLE — LEEVILLE (LEV) VORTAC — LA

REVIEWED BY | SUBMITTED BY | APPROVED BY
SUBMITTER'S TITLE | APPROVER'S TITLE

DESIGNED BY D. RUSTAMOVA
DRAWN BY D. RUSTAMOVA
CHECKED BY M. BECKER
ISSUED BY ENGINEERING SERVICES TERMINAL
DATE 9/12/2025 JCN: 1508914
DRAWING NO. LEV - D - VORTAC - E401 REV.

LEEVILLE VORTAC
GRAND ISLE LOUISIANA

PLOT DATE/TIME: 9/10/2025 4:01:52 PM

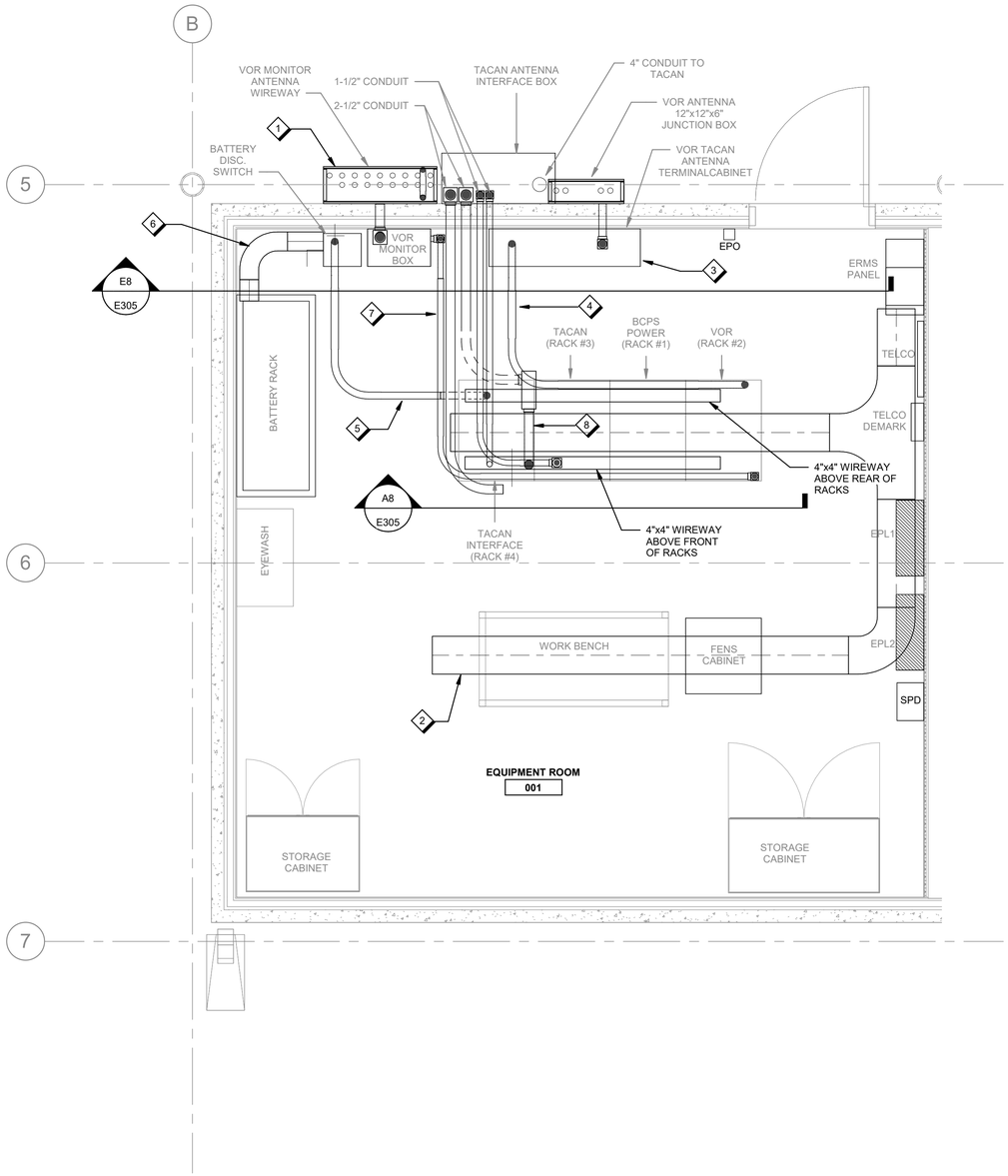

B8 / E402 ENLARGED ELECTRICAL PLAN - OVERHEAD UTILITIES PLAN

1/2" = 1'-0"

GENERAL SHEET NOTES

A. COORDINATE LOCATION OF OUTLETS AND DEVICES WITH OTHER DISCIPLINES. REFER TO ARCHITECTURAL AND MECHANICAL ELEVATIONS, DETAILS, AND MOUNTING INSTALLATION INFORMATION. NOTIFY COR OF ANY DISCREPANCIES BEFORE INSTALLATION OF ANY CONDUIT, OUTLET BOXES, AND/OR SUPPORTING HARDWARE.

B. EQUIPMENT IDENTIFIED WITH (GFE-FAA) DESIGNATION IS GOVERNMENT FURNISHED, CONTRACTOR INSTALLED EQUIPMENT.

C. PROVIDE 4"W x 4"D NEMA-1 WIREWAY ASSEMBLIES WITH SCREW TYPE COVER LIDS FOR BRANCH POWER CIRCUITRY.

D. CONDUIT LAYOUT SHOWN WAS PROVIDED BY FAA INSTALLERS AND IS ILLUSTRATIVE. CONTRACTOR IS REQURIED TO PREPARE A SET OF COORDINATION DRAWINGS FOR FAA REVIEW AND APPROVAL PRIOR TO INSTALLATION DRAWINGS. COORDINATION DRAWINGS MUST BE PREPARED IN ACCORDANCE WITH SPECIFICATION 01 31 00 SECTION 1.8.

E. FIELD COORDINATE THE CONFIGURATION OF EQUIPMENT ROOM 001 SYSTEMS TO OPTIMIZE QUANTITY AND LOCATION OF ELECTRONIC EQUIPMENT CABINETS. TYPICAL ELECTRONIC EQUIPMENT CABINET RACK SIZE IS 24"W x 32"D x 84"H. PROVIDE AND MAINTAIN ALL WORKING CLEARANCES AROUND ELECTRICAL EQUIPMENT AS REQUIRED PER NFPA 70.

1. 4'-0" MIN. CLEARANCE FROM OUTSIDE ROW TO THE ADJACENT WALL OR WALL MOUNTED EQUIPMENT.
2. 5'-0" MIN. CLEARANCE FROM END ROWS TO THE ADJACENT WALL OR WALL MOUNTED EQUIPMENT.
3. 12" MIN. CLEARANCE FROM TOP OF OVERHEAD CABLE TRAY UTILITIES TO BOTTOM OF CEILING. CONDUIT UTILITIES MAY PASS ABOVE CABLE TRAY; HOWEVER, EXACT PLACEMENT AND ROUTING MUST BE COORDINATED WITH COR.
4. MAINTAIN AT LEAST 6" MIN. CLEARANCE BETWEEN TOP OF CABLE TRAY AND BUILDING STRUCTURE ELEMENTS.

SHEET NOTES

1. PROVIDE STAINLESS STEEL NEMA 4X WIREWAY FOR ANTENNA CABLE ENTRY. FIELD VERIFY ENCLOSURE SIZE WITH COR TO ACCOMMODATE ANTENNA WIRING AND RACEWAYS.
2. PROVIDE 24"W X 6"D, 9" RUNG SPACING, LADDER STYLE COMMUNICATIONS CABLE TRAY MOUNTED ON SUSPENDED METAL FRAMING SYSTEM LOCATED ABOVE THE ELECTRONIC EQUIPMENT CABINETS. CABLE TRAY MUST COMPLY WITH FAA SPECIFICATION 1217 (LATEST EDITION); ELECTRICAL WORK, PREMISE WIRING REQUIREMENTS.
3. PROVIDE 48" X 48" X 12" HOFFMAN CONTINUOUS HINGE 2-DOOR WITH HANDLE TYPE 12 ENCLOSURE (CATALOG NUMBER A484812WFLP).
4. PROVIDE 2" CONDUIT FROM BRIDGE BOX TO REAR RIGHT CORNER OF VOR (RACK #2).
5. PROVIDE CONNECTION FROM BATTERY DISCONNECT SWITCH TO EQUIPMENT RACKS.
6. PROVIDE WALL MOUNTED CABLE TRAY FOR CABLES FROM BATTERY DISCONNECT SWITCH TO BATTERY RACK.
7. PROVIDE 1-1/2" CONDUIT FROM VOR MONITOR BOX TO FRONT RIGHT CORNER OF VOR (RACK #2).
8. PROVIDE 1-1/2" CONDUIT FROM TACAN ANTENNA INTERFACE BOX TO WIREWAY ABOVE FRONT OF EQUIPMENT RACKS.

2 0 2 4
Scale: 1/2 INCH = 1 FOOT

FOR OFFICIAL USE ONLY
PUBLIC AVAILABILITY TO BE DETERMINED UNDER 5 USC 552

COMMONWEALTH OF VIRGINIA
MATHIAS M. BECKER
LIC. NO. 029564
9/12/2025
PROFESSIONAL ENGINEER

JACOBS
1100 N GLEBE RD.
SUITE 500
ARLINGTON, VA 22201

REV.	APPROVED DATE	DESCRIPTION	JCN	REDLINE DATE	APVD

Jacobs

DEPARTMENT OF TRANSPORTATION
FEDERAL AVIATION ADMINISTRATION
CENTRAL SERVICE REGION — FT WORTH, TX

LEEVILLE (LEV) VORTAC REPLACEMENT

ELECTRICAL ENLARGED POWER PLANS

GRAND ISLE — LEEVILLE (LEV) VORTAC — LA

REVIEWED BY | SUBMITTED BY | APPROVED BY
SUBMITTER'S TITLE | APPROVER'S TITLE

LEEVILLE VORTAC
GRAND ISLE LOUISIANA

DESIGNED BY D. RUSTAMOVA
DRAWN BY D. RUSTAMOVA
CHECKED BY M. BECKER
ISSUED BY ENGINEERING SERVICES TERMINAL
DATE 9/12/2025 JCN: 1508914
DRAWING NO. LEV - D - VORTAC - E402
REV.

PLOT DATE/TIME: 9/10/2025 4:01:53 PM

PANELBOARD: MDPE

LOCATION: ELECTRIC-GENERATOR ROOM 002
SUPPLY FROM: MTS-1
MOUNTING: Surface
ENCLOSURE: Type 1

VOLTAGE: 208/120V,3P,4W,60Hz
BUS AMPS: 225 A
MAINS: 200 A ← 4

INTERRUPTING RATING (kA SYMMETRICAL): 22 kA
GROUND BUS: EQUIP. ONLY
NEUTRAL BUS RATING: 100%

NOTES	LOAD CLASS	DESCRIPTIONS	TRIP AMPS	POLES	CKT NO.	A	B	C	A	B	C	CKT NO.	POLES	TRIP AMPS	DESCRIPTIONS	LOAD CLASS	NOTES
	Spare; REC; EQN	PNL E/G	125 A ◇5	3	1	0.780			7.999			2	3	150 A ◇6	EPL1	EQC	
					3		0.780			6.999		4					
					5			0.180			6.000	6					
	Spare; LTG; REC;...	EPL2	125 A ◇5	3	7	9.080			0.000			8	1	20 A	SPARE	--	
					9		6.164			0.000		10	1	20 A	SPARE	--	
					11			4.752			0.000	12	1	20 A	SPARE	--	
	--	SPARE	20 A	1	13	0.000			0.000			14	1	20 A	SPARE	--	
	--	SPARE	20 A	1	15		0.000			0.000		16	1	20 A	SPARE	--	
	--	SPARE	20 A	1	17			0.000			2.704	18	2	35 A	EUH-1	MECH	
	--	SPARE	20 A	1	19	0.000			2.704			20					
	--	SPARE	20 A	1	21		0.000			--		22	2	--	SPACE	--	
	--	SPARE	20 A	1	23			0.000			--	24					
	--	SPACE	--	3	25	--			0.000			26	3	100 A	MDPE-SPD-FB	EQN	
					27		--			0.000		28					
					29			--			0.000	30					
					TOTAL CONNECTED LOAD / PHASE:		20.563 kVA	13.943 kVA		13.635 kVA							

LOAD CLASSIFICATIONS	CONNECTED LOAD	DEMAND FACTOR	ESTIMATED DEMAND
LTG	0.794 kVA	125.00%	0.993 kVA
REC	5.4 kVA	100.00%	5.4 kVA
EQC	20.998 kVA	125.00%	26.248 kVA
EQN	2.04 kVA	100.00%	2.04 kVA
MECH	18.909 kVA	125.00%	23.637 kVA

TOTAL LOAD SUMMARY			
LOAD (kVA)		CURRENT (AMPS)	
CONNECTED LOAD:	48.142 kVA	CONNECTED CURRENT:	133.6 A
ESTIMATED DEMAND LOAD:	58.317 kVA	ESTIMATED DEMAND CURRENT:	161.9 A
ESTIMATED DEMAND FACTOR:	121.14%		
SPARE CAPACITY:	20.00%		
ESTIMATED LOAD WITH SPARE:	69.98 kVA	ESTIMATED CURRENT WITH SPARE:	194 A

PANELBOARD: EPL1

LOCATION: EQUIPMENT ROOM 001
SUPPLY FROM: MDPE
MOUNTING: Surface
ENCLOSURE: Type 1

VOLTAGE: 208/120V,3P,4W,60Hz
BUS AMPS: 225 A
MAINS: 150 A ← 1

INTERRUPTING RATING (kA SYMMETRICAL): 22 kA
GROUND BUS: EQUIP. ONLY
NEUTRAL BUS RATING: 100%

NOTES	LOAD CLASS	DESCRIPTIONS	TRIP AMPS	POLES	CKT NO.	A	B	C	A	B	C	CKT NO.	POLES	TRIP AMPS	DESCRIPTIONS	LOAD CLASS	NOTES
	EQC	FUTURE EQUIPMENT	100 A ◇2	3	1	1.000			1.000			2	3	50 A ◇3	FUTURE EQUIPMENT	EQC	
					3		1.000			1.000		4					
					5			1.000			1.000	6					
	EQC	FUTURE EQUIPMENT	50 A ◇3	3	7	1.000			1.000			8	1	20 A	FUTURE EQUIPMENT	EQC	
					9		1.000			1.000		10	1	20 A	FUTURE EQUIPMENT	EQC	
					11			1.000			1.000	12	1	20 A	FUTURE EQUIPMENT	EQC	
	EQC	FUTURE EQUIPMENT	20 A	1	13	1.000			1.000			14	1	20 A	FUTURE EQUIPMENT	EQC	
	EQC	FUTURE EQUIPMENT	20 A	1	15		1.000			1.000		16	1	20 A	FUTURE EQUIPMENT	EQC	
	EQC	FUTURE EQUIPMENT	20 A	1	17			1.000			1.000	18	1	20 A	FUTURE EQUIPMENT	EQC	
	EQC	FUTURE EQUIPMENT	20 A	1	19	1.000			1.000			20	1	20 A	FUTURE EQUIPMENT	EQC	
	EQC	FUTURE EQUIPMENT	20 A	1	21		1.000			--		22	1	--	SPACE	--	
	--	SPACE	--	1	23			--			--	24	1	--	SPACE	--	
	--	SPACE	--	1	25	--			--			26	1	--	SPACE	--	
	--	SPACE	--	1	27		--			--		28	1	--	SPACE	--	
	--	SPACE	--	1	29			--			--	30	1	--	SPACE	--	
	--	SPACE	--	1	31	--			--			32	1	--	SPACE	--	
	--	SPACE	--	1	33		--			--		34	1	--	SPACE	--	
	--	SPACE	--	1	35			--			--	36	1	--	SPACE	--	
	--	SPACE	--	1	37	--			--			38	1	--	SPACE	--	
	--	SPACE	--	1	39		--			--		40	1	--	SPACE	--	
	--	SPACE	--	1	41			--			--	42	1	--	SPACE	--	
					TOTAL CONNECTED LOAD / PHASE:		7.999 kVA	6.999 kVA		6 kVA							

LOAD CLASSIFICATIONS	CONNECTED LOAD	DEMAND FACTOR	ESTIMATED DEMAND
EQC	20.998 kVA	125.00%	26.248 kVA

TOTAL LOAD SUMMARY			
LOAD (kVA)		CURRENT (AMPS)	
CONNECTED LOAD:	20.998 kVA	CONNECTED CURRENT:	58.3 A
ESTIMATED DEMAND LOAD:	26.248 kVA	ESTIMATED DEMAND CURRENT:	72.9 A
ESTIMATED DEMAND FACTOR:	125.00%		
SPARE CAPACITY:	20.00%		
ESTIMATED LOAD WITH SPARE:	31.497 kVA	ESTIMATED CURRENT WITH SPARE:	87 A

PANELBOARD: EPL2

LOCATION: EQUIPMENT ROOM 001
SUPPLY FROM: MDPE
MOUNTING: Surface
ENCLOSURE: Type 1

VOLTAGE: 208/120V,3P,4W,60Hz
BUS AMPS: 225 A
MAINS: 125 A ← 7

INTERRUPTING RATING (kA SYMMETRICAL): 22 kA
GROUND BUS: EQUIP. ONLY
NEUTRAL BUS RATING: 100%

NOTES	LOAD CLASS	DESCRIPTIONS	TRIP AMPS	POLES	CKT NO.	A	B	C	A	B	C	CKT NO.	POLES	TRIP AMPS	DESCRIPTIONS	LOAD CLASS	NOTES
	REC	REC 001 AND 002	20 A	1	1	1.080			1.080			2	1	20 A	REC 001	REC	
	REC	REC 001	20 A	1	3		0.540			0.720		4	1	20 A	REC POWER POLE 001	REC	
	REC	BATTERY MONITORING	20 A	1	5			0.360			0.124	6	1	20 A	LTG - EXTERIOR BLDG	LTG	
	REC	REC - EXTERIOR	20 A	1	7	0.540			0.416			8	2	15 A	AH-1	MECH	
	MECH	EF-3	15 A	2	9		0.158			0.416		10					
					11			0.158			0.432	12	1	20 A	LTG ROOMS 001 AND 002	LTG	
	MECH	HP-2	40 A	2	13	1.997			0.416			14	2	15 A	AH-2	MECH	
					15		1.997			0.416		16					
	EQN	MECH CTRL DAMPER 001	20 A	1	17			0.060			1.997	18	2	40 A	HP-1	MECH	
	MECH	EF-2	20 A	2	19	0.416			1.997			20					
					21		0.416			0.600		22	1	20 A	HYRDROGEN MONITORING PNL	EQN	
	MECH	EF-1	20 A	3	23			0.901			0.720	24	1	20 A	REC 002	REC	
					25	0.901			0.000			26	3	100 A	SPD	EQN	
					27		0.901			0.000		28					
	--	SPARE	20 A	1	29			0.000			0.000	30					
	LTG	LTG ROOMS 001 AND 002	20 A	1	31	0.132			0.106			32	1	20 A	LTG - EXTERIOR PLATFORM EQ	LTG	
	--	SPARE	20 A	1	33		0.000			0.000		34	1	20 A	SPARE	--	
	--	SPARE	20 A	1	35			0.000			0.000	36	1	20 A	SPARE	--	
	--	SPACE	--	1	37	--			--			38	1	--	SPACE	--	
	--	SPACE	--	1	39		--			--		40	1	--	SPACE	--	
	--	SPACE	--	1	41			--			--	42	1	--	SPACE	--	
					TOTAL CONNECTED LOAD / PHASE:		9.08 kVA	6.164 kVA		4.752 kVA							

LOAD CLASSIFICATIONS	CONNECTED LOAD	DEMAND FACTOR	ESTIMATED DEMAND
LTG	0.794 kVA	125.00%	0.993 kVA
REC	5.04 kVA	100.00%	5.04 kVA
EQN	0.66 kVA	100.00%	0.66 kVA
MECH	13.501 kVA	125.00%	16.877 kVA

TOTAL LOAD SUMMARY			
LOAD (kVA)		CURRENT (AMPS)	
CONNECTED LOAD:	19.995 kVA	CONNECTED CURRENT:	55.5 A
ESTIMATED DEMAND LOAD:	23.569 kVA	ESTIMATED DEMAND CURRENT:	65.4 A
ESTIMATED DEMAND FACTOR:	117.87%		
SPARE CAPACITY:	20.00%		
ESTIMATED LOAD WITH SPARE:	28.283 kVA	ESTIMATED CURRENT WITH SPARE:	79 A

PANELBOARD: PNL E/G

LOCATION: ELECTRIC-GENERATOR ROOM 002
SUPPLY FROM: MDPE
MOUNTING: Surface
ENCLOSURE: Type 1

VOLTAGE: 208/120V,3P,4W,60Hz
BUS AMPS: 225 A
MAINS: 125 A ← 7

INTERRUPTING RATING (kA SYMMETRICAL): 22 kA
GROUND BUS: EQUIP. ONLY
NEUTRAL BUS RATING: 100%

NOTES	LOAD CLASS	DESCRIPTIONS	TRIP AMPS	POLES	CKT NO.	A	B	C	A	B	C	CKT NO.	POLES	TRIP AMPS	DESCRIPTIONS	LOAD CLASS	NOTES
	EQN	LP GAS MONITORING PANEL	20 A	1	1	0.600			0.180			2	1	20 A	ENGINE BLOCK HEATER REC	REC	
	EQN	E/G EXHAUST ALARM PANEL	20 A	1	3		0.600			0.180		4	1	20 A	BATTERY CHARGER REC	REC	
	EQN	MECH CTRL DAMPERS RM 002	20 A	1	5			0.180			0.000	6	1	20 A	SPARE	--	
	--	SPARE	20 A	1	7	0.000			0.000			8	1	20 A	SPARE	--	
	--	SPARE	20 A	1	9		0.000			0.000		10	1	20 A	SPARE	--	
	--	SPARE	20 A	1	11			0.000			0.000	12	1	20 A	SPARE	--	
	--	SPARE	20 A	1	13	0.000			0.000			14	1	20 A	SPARE	--	
	--	SPARE	20 A	1	15		0.000			0.000		16	1	20 A	SPARE	--	
	--	SPARE	20 A	1	17			0.000			0.000	18	1	20 A	SPARE	--	
	--	SPARE	20 A	1	19	0.000			0.000			20	1	20 A	SPARE	--	
	--	SPARE	20 A	1	21		0.000			--		22	1	--	SPACE	--	
	--	SPACE	--	1	23			--			--	24	1	--	SPACE	--	
	--	SPACE	--	1	25	--			--			26	1	--	SPACE	--	
	--	SPACE	--	1	27		--			--		28	1	--	SPACE	--	
	--	SPACE	--	1	29			--			--	30	1	--	SPACE	--	
					TOTAL CONNECTED LOAD / PHASE:		0.78 kVA	0.78 kVA		0.18 kVA							

LOAD CLASSIFICATIONS	CONNECTED LOAD	DEMAND FACTOR	ESTIMATED DEMAND
REC	0.36 kVA	100.00%	0.36 kVA
EQN	1.38 kVA	100.00%	1.38 kVA

TOTAL LOAD SUMMARY			
LOAD (kVA)		CURRENT (AMPS)	
CONNECTED LOAD:	1.740 kVA	CONNECTED CURRENT:	4.8 A
ESTIMATED DEMAND LOAD:	1.740 kVA	ESTIMATED DEMAND CURRENT:	4.8 A
ESTIMATED DEMAND FACTOR:	100.00%		
SPARE CAPACITY:	20.00%		
ESTIMATED LOAD WITH SPARE:	2.088 kVA	ESTIMATED CURRENT WITH SPARE:	6 A

SHEET NOTES ◇

1. PROVIDE SQ-D, POWERPACT HD FRAME, 150AF/150AT FRAME WITH 3.2 ELECTRONIC WITH ADJUSTABLE LI TRIP FUNCTIONS.
2. PROVIDE SQ-D, POWERPACT HD FRAME, 150AF/100AT FRAME WITH 3.2 ELECTRONIC WITH ADJUSTABLE LI TRIP FUNCTIONS.
3. PROVIDE SQ-D, POWERPACT HD FRAME, 150AF/50AT FRAME WITH 3.2 ELECTRONIC WITH ADJUSTABLE LI TRIP FUNCTIONS.
4. PROVIDE SQ-D, POWERPACT LD FRAME, 400AF/200AT FRAME WITH 5.3 ELECTRONIC WITH ADJUSTABLE LSI TRIP FUNCTIONS.
5. PROVIDE SQ-D, POWERPACT JD FRAME, 250AF/125AT FRAME WITH 3.2S ELECTRONIC WITH ADJUSTABLE LSI TRIP FUNCTIONS.
6. PROVIDE SQ-D, OWERPACT JD FRAME, 250AF/150AT FRAME WITH 3.2S ELECTRONIC WITH ADJUSTABLE LSI TRIP FUNCTIONS.
7. PROVIDE SQ-D, POWERPACT HD FRAME, 150AF/125AT FRAME WITH 3.2 ELECTRONIC WITH ADJUSTABLE LI TRIP FUNCTIONS.

FOR OFFICIAL USE ONLY
PUBLIC AVAILABILITY TO BE DETERMINED UNDER 5 USC 552

COMMONWEALTH OF VIRGINIA
MATHIAS M. BECKER
LIC. NO. 029564
9/12/2025
PROFESSIONAL ENGINEER

JACOBS
1100 N GLEBE RD.
SUITE 500
ARLINGTON, VA 22201

REV.	APPROVED DATE	DESCRIPTION	JCN	REDLINE DATE	APVD

DEPARTMENT OF TRANSPORTATION
FEDERAL AVIATION ADMINISTRATION
CENTRAL SERVICE REGION — FT WORTH, TX

LEEVILLE (LEV) VORTAC REPLACEMENT

PANELBOARD SCHEDULES

GRAND ISLE — LEEVILLE (LEV) VORTAC — LA

Jacobs

LEEVILLE VORTAC
GRAND ISLE LOUISIANA

REVIEWED BY | SUBMITTED BY | APPROVED BY
SUBMITTER'S TITLE | APPROVER'S TITLE
DESIGNED BY D. RUSTAMOVA
DRAWN BY D. RUSTAMOVA
CHECKED BY M. BECKER
ISSUED BY: ENGINEERING SERVICES TERMINAL
DATE: 9/12/2025 JCN: 1508914
DRAWING NO. LEV - D - VORTAC - E501 REV.

PLOT DATE/TIME: 9/10/2025 4:01:53 PM

MECHANICAL EQUIPMENT CONNECTION SCHEDULE

EQUIPMENT			ELECTRICAL LOAD								
TAG	DESCRIPTION	LOCATION	VOLTAGE	PH	kVA	FLA	MCA	MOCPD	WIRE AND CONDUIT	CIRCUIT NUMBER	EQUIPMENT CONNECTION TYPE (ENCLOSURE RATING AND SAFETY DISCONNECT SWITCH TYPE) (DIV 26 TO PROVIDE EQUIPMENT UNLESS OTHERWISE NOTED)
AH-1	HEAT PUMP - INDOOR	EQUIP RM	208	1	0.8	4.0	5.0	15 A	(2) #12 + #12G IN 3/4" C	EPL2: 8,10	ROTARY DISCONNECT SWITCH
AH-2	HEAT PUMP - INDOOR	EQUIP RM	208	1	0.8	4.0	5.0	15 A	(2) #12 + #12G IN 3/4" C	EPL2: 14,16	ROTARY DISCONNECT SWITCH
EF-1	EXHAUST FAN	OUTSIDE - E/G RM WALL	208	3	2.7	7.5	9.4	20 A	(3) #12 + #12G IN 3/4" C	EPL2: 23,25,27	NON-FUSIBLE DISCONNECT SWITCH - NEMA 7 ENCLOSURE RATED, NOTE 1
EF-2	EXHAUST FAN	E/G RM	208	1	0.8	4.0	5.0	20 A	(2) #12 + #12G IN 3/4" C	EPL2: 19,21	NON-FUSIBLE DISCONNECT SWITCH - NEMA 4X ENCLOSURE RATED
EF-3	EXHAUST FAN	OUTSIDE - EQUIP RM WALL	208	1	0.3	1.5	1.9	15 A	(2) #12 + #12G IN 3/4" C	EPL2: 9,11	NON-FUSIBLE DISCONNECT SWITCH - NEMA 4X ENCLOSURE RATED
EUH-1	ELECTRIC UNIT HEATER	E/G RM	208	1	5.4	26.0	32.5	35 A	(2) #8 + #8G IN 1" C	MDPE: 18,20	FUSIBLE DISCONNECT SWITCH - NEMA 4X ENCLOSURE RATED
HP-1	HEAT PUMP - OUTDOOR	OUTSIDE - PLATFORM	208	1	4.0	19.2	24.0	40 A	(2) #6 + #10G IN 3/4" C	EPL2: 18,20	240V, 40A FUSIBLE DISCONNECT SWITCH - NEMA 4X ENCLOSURE RATED
HP-2	HEAT PUMP - OUTDOOR	OUTSIDE - PLATFORM	208	1	4.0	19.2	24.0	40 A	(2) #6 + #10G IN 3/4" C	EPL2: 13,15	240V, 40A FUSIBLE DISCONNECT SWITCH - NEMA 4X ENCLOSURE RATED

NOTES:

1. PROVIDE NEMA 7 ENCLOSURE RATED PER NEC ARTICLE 500, CLASS 1, DIVISION 2, GROUP D APPLICATION CERTIFICATION FOR POWER CIRCUIT CONNECTIONS TO THE MECHANICAL PROPANE EXHAUST VENTILATION SYSTEM WHERE INDICATED ON THE MECHANICAL DRAWINGS.
2. ADJUST WIRE SIZES FOR EXTERIOR CIRCUITS IN ACCORDANCE WITH NEC SECTION 310.15 (B).

LIGHTING FIXTURE SCHEDULE

TYPE	DESCRIPTION	ASSEMBLY CONSTRUCTION	OPTICAL DISTRIBUTION	MOUNTING	POWER SUPPLY / DRIVER	NOMINAL LUMENS	LPW	WATTS (NOMINAL)	LAMP TYPE	VOLTAGE	BASIS OF DESIGN MANUFACTURER / SERIES	REMARKS
A1	4FT LONG CEILING SURFACE MOUNTED VANDAL RESISTANT LED LIGHT FIXTURE	POLYCARBONATE CLEAR HOUSING WITH ALUMINUM SHEET METAL BOARD PLATE IN A CLOSED-CELL GASKET.	WIDE CLEAR LENS OPTICAL DISTRIBUTION.	CEILING SURFACE	0-10V DIMMABLE LED DRIVER	4000	121	33	LED 4000K 80 MIN CRI	120/277V	LITHONIA / VAP	NOTE-1
S1	EXTERIOR SURFACE MOUNTED WALL PACK FIXTURE	POLYCARBONATE CLEAR, DIE-CAST ALUMINUM HOUSING, POWDER COAT FINISH.	POLYCARBONATE REFRACTOR.	WALL SURFACE	-	2,225	139	16	LED 5000K 70 MIN CRI	120/277V	HOLOPHANE / WCNP	
S2	EXTERIOR STRUCTUAL COLUMN SURFACE MOUNTED FIXTURE	POLYCARBONATE CLEAR, ALUMINIUM HOUSING WITH ADJASTABLE MOUNT TO TILT THE FIXTURE TO ILLUMINATE THE STAIR TREADS.	TYPE V CLEAR LENS OPTICAL DISTRIBUTION.	STRUCTURAL COLUMN SURFACE	-	3253	151	22	LED 5000K 80 MIN CRI	120/277V	RIG-A-LITE / IALJ	NOTE-2
S3	EXTERIOR STRUCTUAL COLUMN SURFACE MOUNTED FIXTURE	POLYCARBONATE CLEAR, ALUMINIUM HOUSING WITH ADJASTABLE MOUNT TO TILT THE FIXTURE TO ILLUMINATE THE PLATFORM.	TYPE V CLEAR LENS OPTICAL DISTRIBUTION.	STRUCTURAL COLUMN SURFACE	-	7561	143	53	LED 5000K 80 MIN CRI	120/277V	RIG-A-LITE / IALJ	NOTE-2
X1	EMERGENCY BUG-EYE AND EXIT SIGN COMBO WITH BATTERY BACKUP 90 MINUTES ILLUMINATION	INJECTION-MOLDED, HIGH-IMPACT, CLOSED CELL DIE-CUT NEOPRENE GASKET SEAL	TWO HIGH-PERFORMANCE LED DISTRIBUTES LUMENS IN A SPOT PATTERN.	WALL SURFACE	-	-	-	6.5	LED	120/277V	LITHONIA / INDL	NOTE-1
X2	EMERGENCY BUG-EYE WITH BATTERY BACKUP 90 MINUTES ILLUMINATION	INJECTION-MOLDED, HIGH-IMPACT, CLOSED CELL DIE-CUT NEOPRENE GASKET SEAL	TWO HIGH-PERFORMANCE LED DISTRIBUTES LUMENS IN A SPOT PATTERN.	WALL SURFACE	-	-	-	6.5	LED	120/277V	LITHONIA / INDL	NOTE-1

SCHEDULE NOTES:

1. PROVIDE LED LIGHT FIXTURE ASSEMBLY WITH DRIVER COMPONENT LISTED IN COMPLIANCE WITH FCC REQUIREMENTS PER CFR TITLE 47, PART 15, CLASS B RADIATED AND CONDUCTED POWER EMISSIONS. DRIVER COMPONENT MUST COMPLY WITH EMISSIONS REQUIREMENTS. PROVIDE MANUFACTURER DOCUMENTATION INDICATING COMPLIANCE VIA FORMAL TESTING. PROVIDE BASIS OF DESIGN PRODUCT, ELDO SOLO SERIES 0-10 VOLT WITH 0.1% DIMMING CAPABILITY OR EQUIVALENT.
2. PROVIDE EXTERNAL MOUNTED TO THE FIXTURE DUAL-LAYER POLYCARBONATE GLAZING SHIELD WITH GALVANIZED STEEL MOUNTING BRACKETS, HARDWARE, AND EXTENSION BOLTS FOR BALLISTIC IMPACT ABSORPTION.

FOR OFFICIAL USE ONLY
PUBLIC AVAILABILITY TO BE DETERMINED UNDER 5 USC 552

COMMONWEALTH OF VIRGINIA
MATHIAS M. BECKER
LIC. NO. 029564
9/12/2025
PROFESSIONAL ENGINEER

JACOBS
1100 N GLEBE RD.
SUITE 500
ARLINGTON, VA 22201

REV.	APPROVED DATE	DESCRIPTION	JCN	REDLINE DATE	APVD

Jacobs

DEPARTMENT OF TRANSPORTATION
FEDERAL AVIATION ADMINISTRATION
CENTRAL SERVICE REGION — FT WORTH, TX

LEEVILLE (LEV) VORTAC REPLACEMENT

ELECTRICAL SCHEDULES

GRAND ISLE — LEEVILLE (LEV) VORTAC — LA

REVIEWED BY | SUBMITTED BY | APPROVED BY
SUBMITTER'S TITLE | APPROVER'S TITLE

LEEVILLE VORTAC
GRAND ISLE LOUISIANA

DESIGNED BY D. RUSTAMOVA
DRAWN BY D. RUSTAMOVA
CHECKED BY M. BECKER

ISSUED BY: ENGINEERING SERVICES TERMINAL

DATE 9/12/2025 | JCN: 1508914
DRAWING NO. LEV - D - VORTAC - E551 | REV.

PLOT DATE/TIME: 9/10/2025 4:01:53 PM

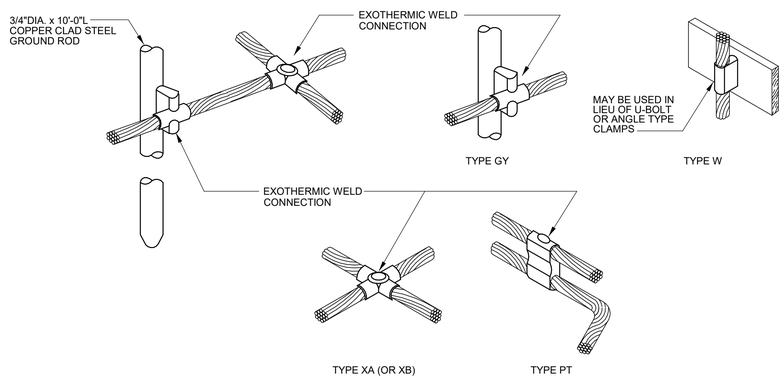

E8 / E601 TYPICAL GROUNDING CONNECTION DETAILS

NTS

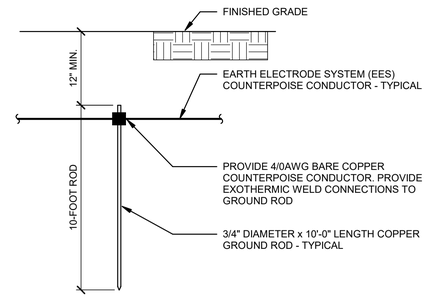

NOTE:
ALL CONDUCTOR TERMINATIONS TO THE EES MUST BE EXOTHERMICALLY WELDED TO A 4/0 AWG BARE COPPER CONDUCTOR PRIOR TO ENTERING THE GROUND AT NOT LESS THAN 18 INCHES ABOVE GRADE. THE 4/0 AWG BARE COPPER MUST BE BONDED DIRECTLY TO THE GROUND ROD OR ELECTRODE CONDUCTOR IN THE EES.

E5 / E601 TYPICAL GROUND ROD INSTALLATION DETAIL

NTS

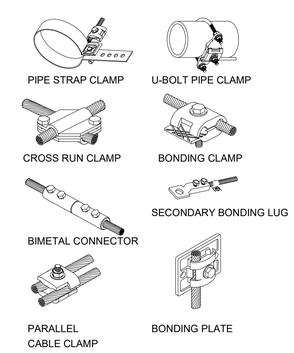

TYPICAL BONDING / SPLICE CONNECTION DETAILS

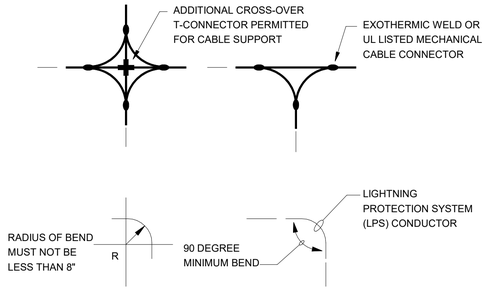

TYPICAL LPS CONDUCTOR CABLE BENDING / CONNECTION REQUIREMENTS

Y OR PARALLEL CONNDCTOR

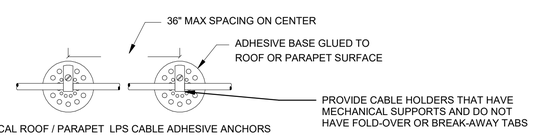

TYPICAL ROOF / PARAPET LPS CABLE ADHESIVE ANCHORS

A8 / E601 TYPICAL LPS CONNECTION DETAILS

NTS

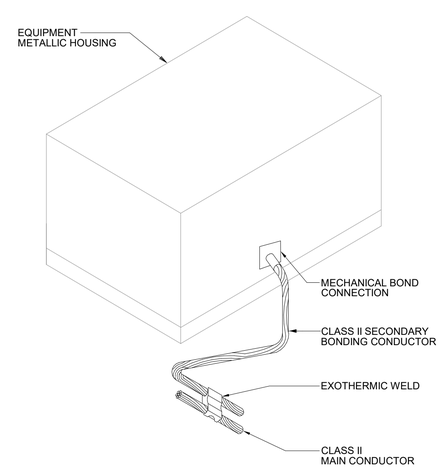

A5 / E601 TYPICAL EQUIPMENT BONDING DETAIL

NTS

FOR OFFICIAL USE ONLY
PUBLIC AVAILABILITY TO BE DETERMINED UNDER 5 USC 552

JACOBS
1100 N GLEBE RD.
SUITE 500
ARLINGTON, VA 22201

REV.	APPROVED DATE	DESCRIPTION	JCN	REDLINE DATE	APVD

Jacobs

DEPARTMENT OF TRANSPORTATION
FEDERAL AVIATION ADMINISTRATION
CENTRAL SERVICE REGION — FT WORTH, TX

LEEVILLE (LEV) VORTAC REPLACEMENT

ELECTRICAL DETAILS

GRAND ISLE — LEEVILLE (LEV) VORTAC — LA

COMMONWEALTH OF VIRGINIA
MATHIAS M. BECKER
LIC. NO. 029564
9/12/2025
PROFESSIONAL ENGINEER

REVIEWED BY	SUBMITTED BY	APPROVED BY
	SUBMITTER'S TITLE	APPROVER'S TITLE

LEEVILLE VORTAC
GRAND ISLE LOUISIANA

DESIGNED BY	D. RUSTAMOVA	ISSUED BY	ENGINEERING SERVICES TERMINAL
DRAWN BY	D. RUSTAMOVA	DATE	9/12/2025
CHECKED BY	M. BECKER	JCN:	1508914
DRAWING NO.	LEV - D - VORTAC - E601	REV.	

PLOT DATE/TIME: 9/10/2025 4:01:54 PM

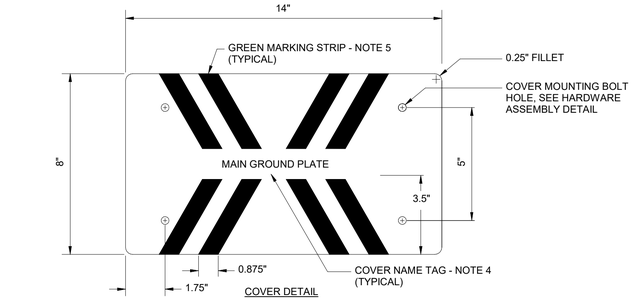

COVER DETAIL

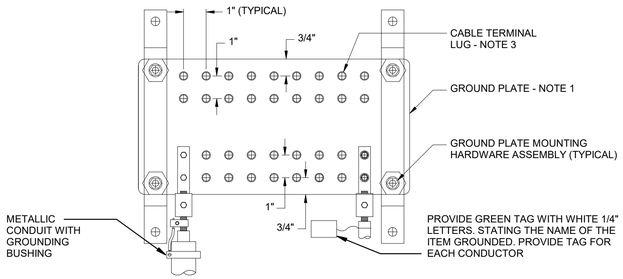

GROUND PLATE - FRONT VIEW

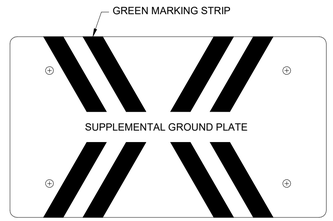

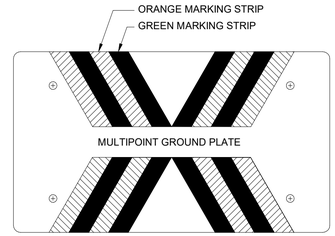

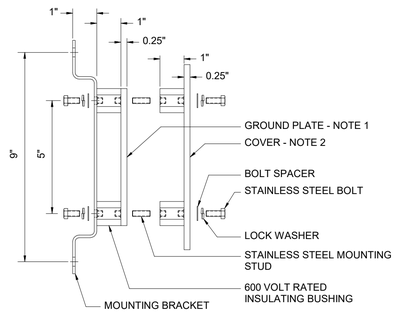

PLATE MOUNTING HARDWARE ASSEMBLY - SIDE VIEW

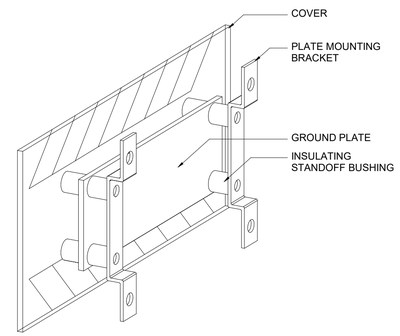

ILLUSTRATIVE ISOMETRIC - REAR VIEW

DETAIL NOTES:

1. PROVIDE MIN. 6"W x 12"L x 1/4"T COPPER GROUND PLATE. INCREASE PLATE WIDTH DIMENSION AS REQUIRED TO ACCOMMODATE CABLE CONNECTIONS AS INDICATED ON THE PLAN DRAWINGS.
2. PROVIDE MIN. 8"W x 14"L x 1/4"T PLEXIGLASS COVER WITH IDENTIFICATION AS INDICATED. EXTEND COVER 1" BEYOND GROUND PLATE EDGES, COORDINATE COVER DIMENSIONS WITH GROUND PLATE DIMENSIONS.
3. PROVIDE CABLE TERMINAL LUG CONNECTIONS. PUNCH PLATE HOLES 0.312 INCH DIAMETER WITH 3/8-16UNC BOLT TAPS.
4. PROVIDE COVER IDENTIFICATION NAME TAG WITH 3/8"H BLACK LETTERING TEXT.
5. PROVIDE COVER IDENTIFICATION MARKINGS:
   * MAIN GROUND PLATE: 7/8" WIDE GREEN STRIPS
   * SUPPLEMENTAL GROUND PLATE: 7/8" WIDE GREEN STRIPS
   * MULTIPOINT GROUND PLATE: 7/8" WIDE ORANGE AND GREEN STRIPS
   * SINGLE POINT GROUND PLATE: 7/8" WIDE YELLOW AND GREEN STRIPS

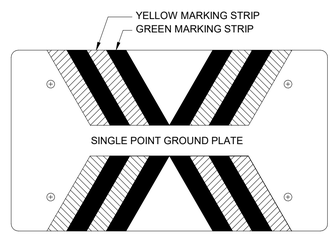

D8 / E602 TYPICAL MULTIPOINT GROUND PLATE DETAILS

NTS

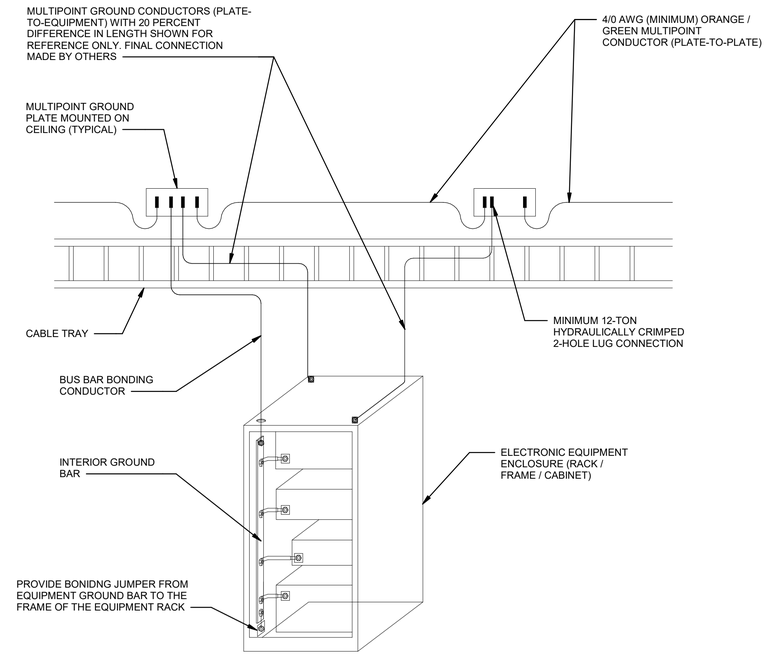

D3 / E602 TYPICAL AIR TRAFFIC CONTROL EQUIPMENT RACK BONDING DETAIL

NTS

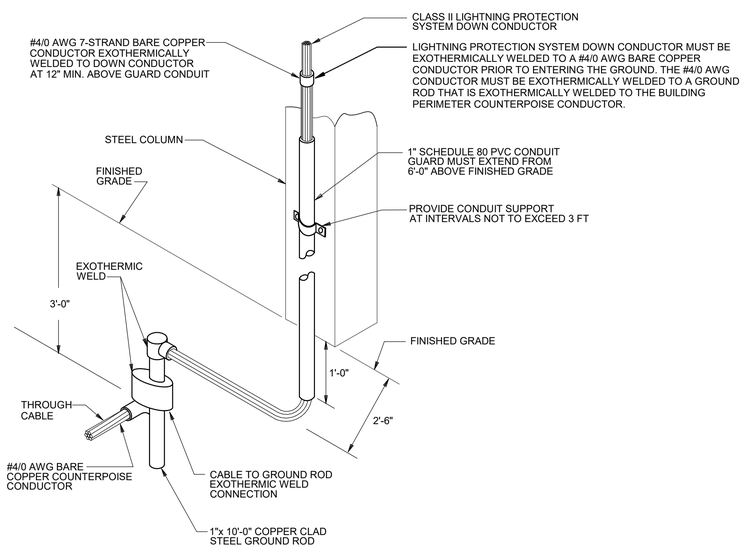

A8 / E602 TYPICAL DOWN CONDUCTOR CONNECTION DETAIL

NTS

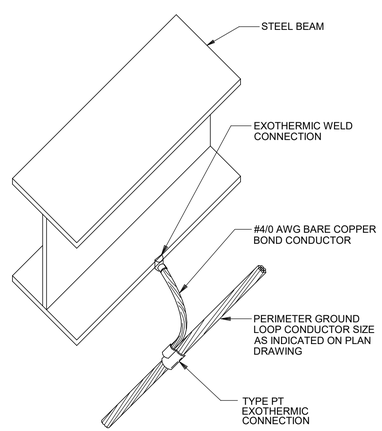

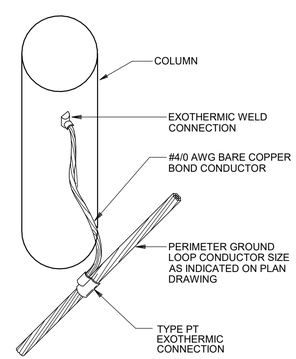

A6 / E602 TYPICAL STRUCTURAL STEEL BONDING DETAIL

NTS

FOR OFFICIAL USE ONLY
PUBLIC AVAILABILITY TO BE DETERMINED UNDER 5 USC 552

COMMONWEALTH OF VIRGINIA
MATHIAS M. BECKER
LIC. NO. 029564
9/12/2025
PROFESSIONAL ENGINEER

JACOBS
1100 N GLEBE RD.
SUITE 500
ARLINGTON, VA 22201

REV.	APPROVED DATE	DESCRIPTION	JCN	REDLINE DATE	APVD

Jacobs

DEPARTMENT OF TRANSPORTATION
FEDERAL AVIATION ADMINISTRATION
CENTRAL SERVICE REGION — FT WORTH, TX

LEEVILLE (LEV) VORTAC REPLACEMENT

ELECTRICAL DETAILS

GRAND ISLE — LEEVILLE (LEV) VORTAC — LA

REVIEWED BY | SUBMITTED BY | APPROVED BY
SUBMITTER'S TITLE | APPROVER'S TITLE

LEEVILLE VORTAC
GRAND ISLE LOUISIANA

DESIGNED BY D. RUSTAMOVA
DRAWN BY D. RUSTAMOVA
CHECKED BY M. BECKER

ISSUED BY: ENGINEERING SERVICES TERMINAL

DATE 9/12/2025 | JCN: 1508914
DRAWING NO. LEV - D - VORTAC - E602 | REV.

PLOT DATE/TIME: 9/10/2025 4:01:55 PM

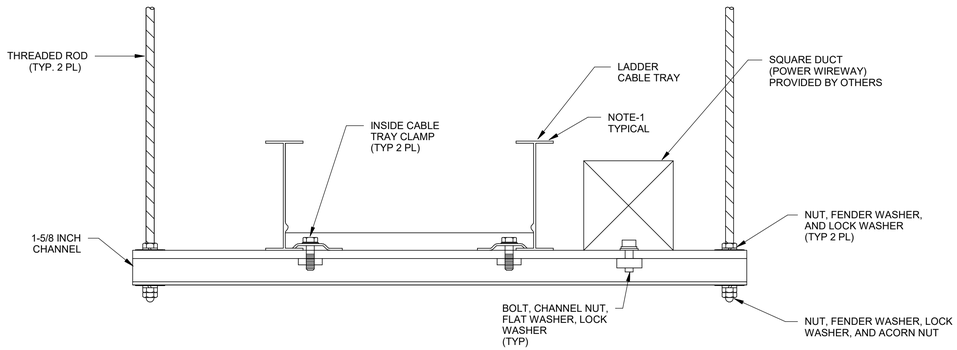

NOTES:

1. PROVIDE CABLE LADDER TYPE CABLE TRAY SYSTEM, REFER TO PLAN DRAWINGS FOR SYSTEM LAYOUT.

F8 / E603 TYPICAL CABLE TRAY AND POWER WIREWAY TRAPEZE HANGER ASSEMBLY DETAIL

NTS

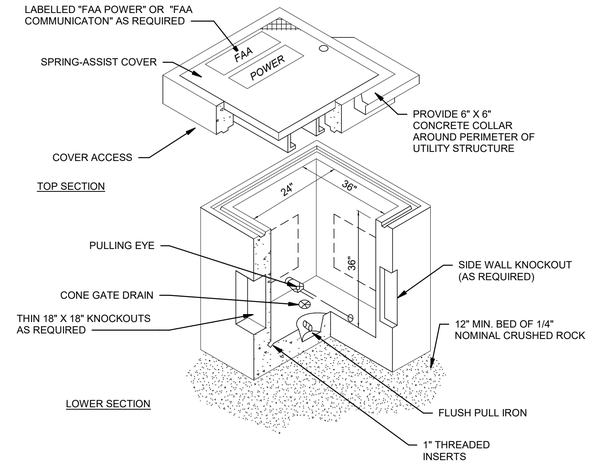

DETAIL NOTES:

1. ALL STEEL, INCLUDING FASTENERS (OTHER THAN REBAR), MUST BE HOT-DIPPED GALVANIZED AFTER FABRICATION.
2. ALL HANDHOLES MUST CONFORM TO THE LATEST FAA, ASTM, AND AASHTO SPECIFICATIONS. HANDHOLES MUST BE H20-RATED.

   H-20 RATED:
   24" X 36" X 36" D PRECAST CONCRETE, H-20 RATED BOLT-DOWN FRAME, WITH HINGED AND SPRING ASSIST DOOR ASSEMBLY (INWESCO OR APPROVED EQUAL).
3. A MINIMUM OF TWO NON-METALLIC CABLE RACKS WITH SUPPORT ARMS MUST BE FURNISHED AND INSTALLED WITH EACH HANDHOLE. SPLICES AND CABLES MUST BE ATTACHED TO CABLE RACKS USING 1/4" NYLON LINE.
4. CONTRACTOR MUST PROVIDE GROUND ROD OUTSIDE OF HANDHOLE AND GROUND TO IT ANY METAL OBJECT INSIDE OR OUTSIDE OF HANDHOLE (SUCH AS, BUT NOT LIMITED TO, MISC. CONNECTORS, THE TRENCH GUARD WIRE, ETC).
5. PROVIDE GROUNDING BUSHINGS AT THE ENDS OF PVC-COATED GRS CONDUIT AT HANDHOLES AND EXOTHERMICALLY WELD TO A GROUND ROD OUTSIDE THE HANDHOLE WITH A NO. 2 AWG BC.
6. THE CONTRACTOR MUST PROVIDE ANTI-SEIZE COMPOUND FOR BOLT THAT SECURES THE LID CLOSED.
7. THE CONTRACTOR MUST GROUT ALL CONDUIT PENETRATIONS.
8. PROVIDE MANUFACTURER DRAWINGS AND STRUCTURAL CALCULATIONS FOR ALL CONCRETE ELEMENTS OF HANDHOLES AND FABRICATED TRAFFIC LIDS.
9. THE CONTRACTOR MUST PROVIDE A DRAIN WITH CONE GRATE.
10. PROVIDE/MAINTAIN 12" (MIN.) SEPARATION BETWEEN POWER AND CONTROL CABLES WITHIN HANDHOLES.
11. ALL CABLES MUST BE TAGGED IN EACH HANDHOLE WITH TWO TAGS PER CABLE, PER SPECIFICATIONS. TAGS MUST BE ATTTACHED TO THE CABLE IMMEDIATELY AFTER INSTALLATION.

HANDHOLE	DIMENSIONS
ELEC	24" X 36" X 36" DEEP
TELECOM	24" X 36" X 36" DEEP

F4 / E603 TYPICAL ELECTRICAL HANDHOLE DETAIL

6" = 1'-0"

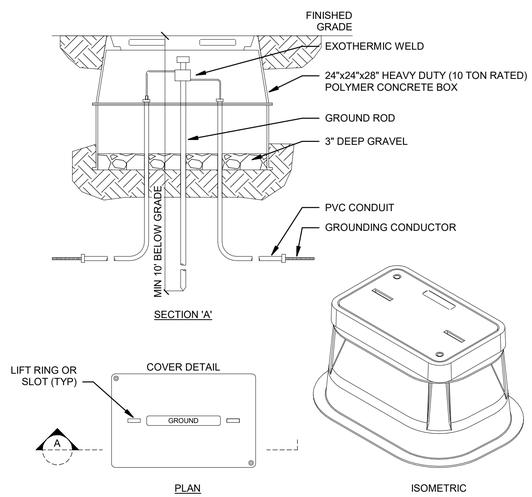

C8 / E603 TYPICAL GROUND ROD INSPECTION PIT DETAIL

NTS

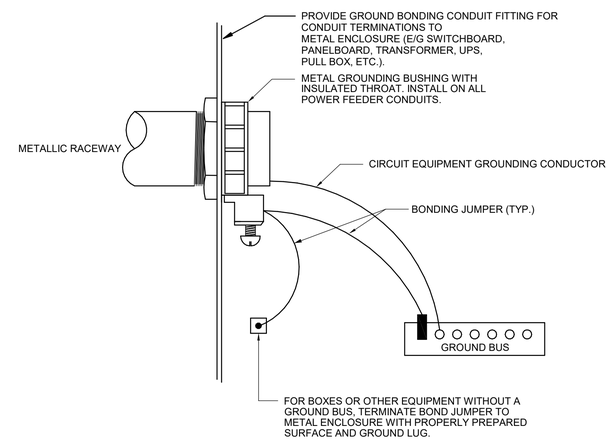

C6 / E603 TYPICAL CONDUIT BONDING DETAIL

NTS

FOR OFFICIAL USE ONLY
PUBLIC AVAILABILITY TO BE DETERMINED UNDER 5 USC 552

COMMONWEALTH OF VIRGINIA
MATHIAS M. BECKER
LIC. NO. 029564
9/12/2025
PROFESSIONAL ENGINEER

JACOBS
1100 N GLEBE RD.
SUITE 500
ARLINGTON, VA 22201

REV.	APPROVED DATE	DESCRIPTION	JCN	REDLINE DATE	APVD

Jacobs

DEPARTMENT OF TRANSPORTATION
FEDERAL AVIATION ADMINISTRATION
CENTRAL SERVICE REGION — FT WORTH, TX

LEEVILLE (LEV) VORTAC REPLACEMENT

ELECTRICAL DETAILS

GRAND ISLE — LEEVILLE (LEV) VORTAC — LA

REVIEWED BY | SUBMITTED BY | APPROVED BY
SUBMITTER'S TITLE | APPROVER'S TITLE

LEEVILLE VORTAC
GRAND ISLE LOUISIANA

DESIGNED BY D. RUSTAMOVA
DRAWN BY D. RUSTAMOVA
CHECKED BY M. BECKER
ISSUED BY ENGINEERING SERVICES TERMINAL
DATE 9/12/2025 JCN: 1508914
DRAWING NO. LEV - D - VORTAC - E603
REV.

PLOT DATE/TIME: 9/10/2025 4:01:55 PM

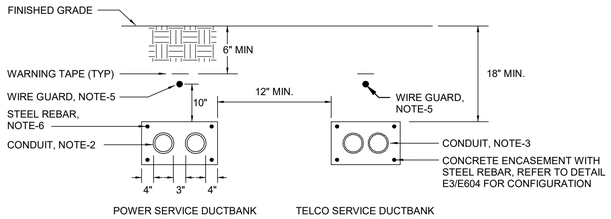

NOTES:

1. PROVIDE CONDUIT DUCT SPACERS AT 5-FOOT INTERVALS.
2. REFER TO POWER ONELINE DIAGRAM FOR CONDUIT AND WIRE SIZE INFORMATION. PROVIDE CONCRETE ENCASED DUCTBANK WITH CIRCUITRY IN ACCORDANCE WITH POWER UTILITY INSTALLATION REQUIREMENTS.
3. PROVIDE (2) 2" SCHEDULE 40 PVC CONDUITS WITH CONCRETE ENCASEMENT. PROVIDE FIBER OPTIC CABLE. REFER TO DETAIL F8/E005 FOR ADDITIONAL INFORMATION. PROVIDE (1) SPARE CONDUIT WITH PULL CORD.
4. PROVIDE COMPACTED BACKFILL MATERIAL FOR DUCTBANK CONSTRUCTION, REFER TO CIVIL DRAWINGS FOR DUCTBANK CONSTRUCTION AND ROUTING.
5. PROVIDE #1/0AWG BARE CU GUARD WIRE FOR LIGHTNING PROTECTION. LOCATE WIRE CENTERED ABOVE DUCTBANK. TERMINATE GUARD WIRE TO AN EARTH DRIVEN GROUND ROD AT EACH END OF DUCTBANK, AND AT APPROXIMATELY 90-FT INTERVALS ALONG THE GUARD WIRE PATH. THE SPACING BETWEEN GROUND RODS MUST VARY BY 10 TO 20 PERCENT.
6. PROVIDE RED COLOR CONCRETE WITH STEEL REINFORCEMENT. CONSTRUCT THE DUCTBANK IN ACCORDANCE WITH THE ELECTRIC UTILITY (ENTERGY) INSTALLATION REQUIREMENTS. REFER TO DETAIL E3/E604 FOR ADDITIONAL INFORMATION.

F8 / E604 TYPICAL CONDUIT DUCTBANK DETAIL

NTS

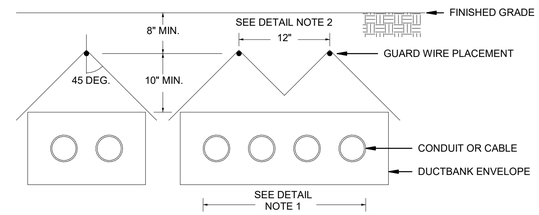

NOTES:

1. PROVIDE ADDITIONAL PARALLEL GUARD WIRE RUNS FOR CONDUIT OR CABLE DUCTBANKS WIDER THAN 3-FEET.
2. THE SPACING INTERVALS BETWEEN THE CENTER LINES OF THE GUARD WIRES SHOULD NOT EXCEED TWICE THE HEIGHT DISTANCE BETWEEN THE GUARD WIRE AND DUCTBANK.

F5 / E604 TYPICAL BURIED GUARD WIRE DETAIL

NTS

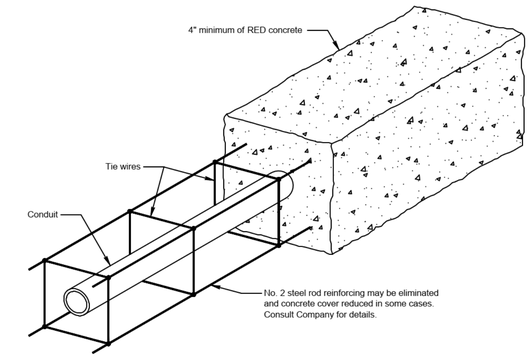

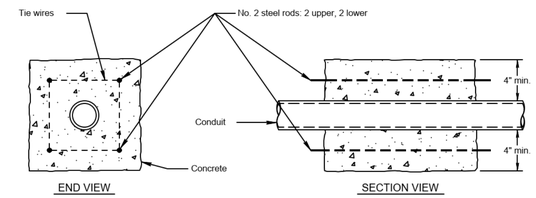

NOTES:

1. PROVIDE UNDERGROUND CONCRETE ENCASED DUCTBANK WITH STEEL REINFORCEMENT IN ACCORDANCE WITH ENTERGY INSTALLATION STANDARD DETAIL NO. D8-7. ABOVE ILLUSTRATIONS PROVIDE DETAIL D8-7 FROM ENTERGY 2018 CUSTOMER INSTALLATION STANDARDS FOR ELECTRIC SERVICE.
2. PROVIDE QUANTITY OF CONDUITS IN DUCTBANK PROFILE IN ACCORDANCE WITH DETAIL F8/E604.
3. PROVIDE RED COLOR CONCRETE AND STEEL REINFORCEMENT IN ACCORDANCE WITH ENTERGY INSTALLATION REQUIREMENTS.

E3 / E604 TYPICAL CONCRETE ENCASED DUCTBANK

NTS

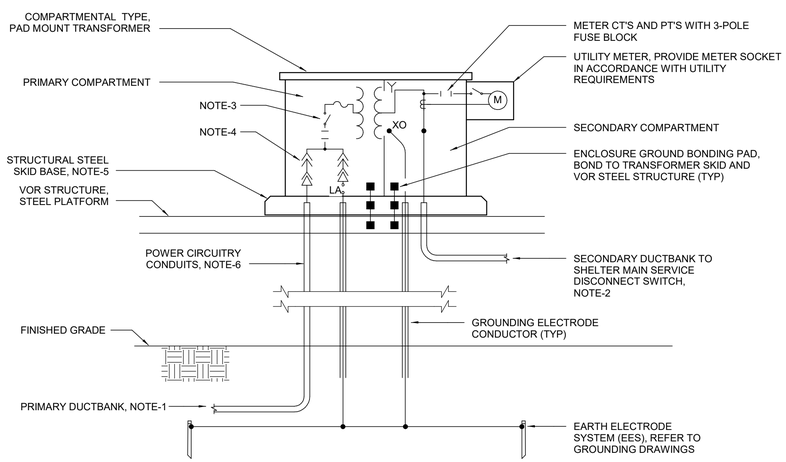

NOTES:

1. REFER TO POWER ONE-LINE DIAGRAM FOR CONDUIT AND WIRE SIZE INFORMATION. PROVIDE CONCRETE ENCASED DUCTBANK WITH CIRCUITRY IN ACCORDANCE WITH POWER UTILITY INSTALLATION REQUIREMENTS.
2. PROVIDE 208Y/120V, THREE PHASE SECONDARY FEEDERS FOR BUILDING SERVICE.
3. PRIMARY CONNECTION: PROVIDE 2-POSITION LOAD BREAK OIL SWITCH WITH OIL - IMMERSED CURRENT LIMITING FUSES WITH BAYONET OIL - IMMERSED EXPULSION FUSES FOR TRANSFORMER BACKUP PROTECTION.
4. PROVIDE PRIMARY BUSHING WELLS AND INSERTS CONFIGURED WITH SEPARABLE LOAD BREAK CONNECTORS AT INPUT CONNECTION. PROVIDE LOOP FEED INPUT WITH ONE RADIAL INPUT FEEDER AND LIGHTNING ARRESTERS (LA) AS INDICATED.
5. TRANSFORMER TO BE INSTALLED ON VOR STRUCTURAL STEEL PLATFORM DECK. PROVIDE STEEL SKID BASE FOR TRANSFORMER MOUNTING/ ATTACHMENT SYSTEM, REFER TO STRUCTURAL FOR MOUNTING OF SKID TO VOR STRUCTURAL PLATFORM.
6. ROUTE POWER CIRCUITRY CONDUITS ALONG VOR STRUCTURAL STEEL COLUMN AND BEAM MEMBERS. PROVIDE METAL CHANNEL FRAMING SYSTEM TO ATTACH CONDUIT SYSTEMS TO THE VOR STRUCTURE.

A8 / E604 STEEL SKID BASE MOUNT TRANSFORMER CONNECTION DETAIL

NTS

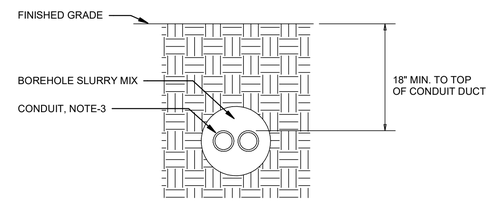

POWER SERVICE HDD DUCTBANK

NOTES:

1. PROVIDE HORIZONTAL DIRECTIONAL DRILLING (HDD) BORING IN ACCORDANCE WITH SPECIFICATION SECTION 33 05 00.
2. REFER TO DRAWING DETAIL F6/E004 FOR SITE UTILITY INFRASTRUCTURE INSTALLATION REQUIREMENTS.
3. PROVIDE (2) 6" DIAMETER SCHEDULE 80 PVC CONDUITS WITH SLURRY MIX CONCRETE ENCASEMENT. PROVIDE PULL CORDS IN EACH CONDUIT DUCT.

C3 / E604 HORIZONTAL DRILLING DUCTBANK SECTION

NTS

FOR OFFICIAL USE ONLY
PUBLIC AVAILABILITY TO BE DETERMINED UNDER 5 USC 552

COMMONWEALTH OF VIRGINIA
MATHIAS M. BECKER
LIC. NO. 029564
9/12/2025
PROFESSIONAL ENGINEER

JACOBS
1100 N GLEBE RD.
SUITE 500
ARLINGTON, VA 22201

REV.	APPROVED DATE	DESCRIPTION	JCN	REDLINE DATE	APVD

Jacobs

DEPARTMENT OF TRANSPORTATION
FEDERAL AVIATION ADMINISTRATION
CENTRAL SERVICE REGION — FT WORTH, TX

LEEVILLE (LEV) VORTAC REPLACEMENT

ELECTRICAL DETAILS

GRAND ISLE — LEEVILLE (LEV) VORTAC — LA

REVIEWED BY	SUBMITTED BY	APPROVED BY
	SUBMITTER'S TITLE	APPROVER'S TITLE

LEEVILLE VORTAC
GRAND ISLE LOUISIANA

DESIGNED BY	D. RUSTAMOVA	ISSUED BY: ENGINEERING SERVICES TERMINAL	DATE 9/12/2025 — JCN: 1508914
DRAWN BY	D. RUSTAMOVA		DRAWING NO. LEV - D - VORTAC - E604 — REV.
CHECKED BY	M. BECKER		

PLOT DATE/TIME: 9/10/2025 4:01:56 PM

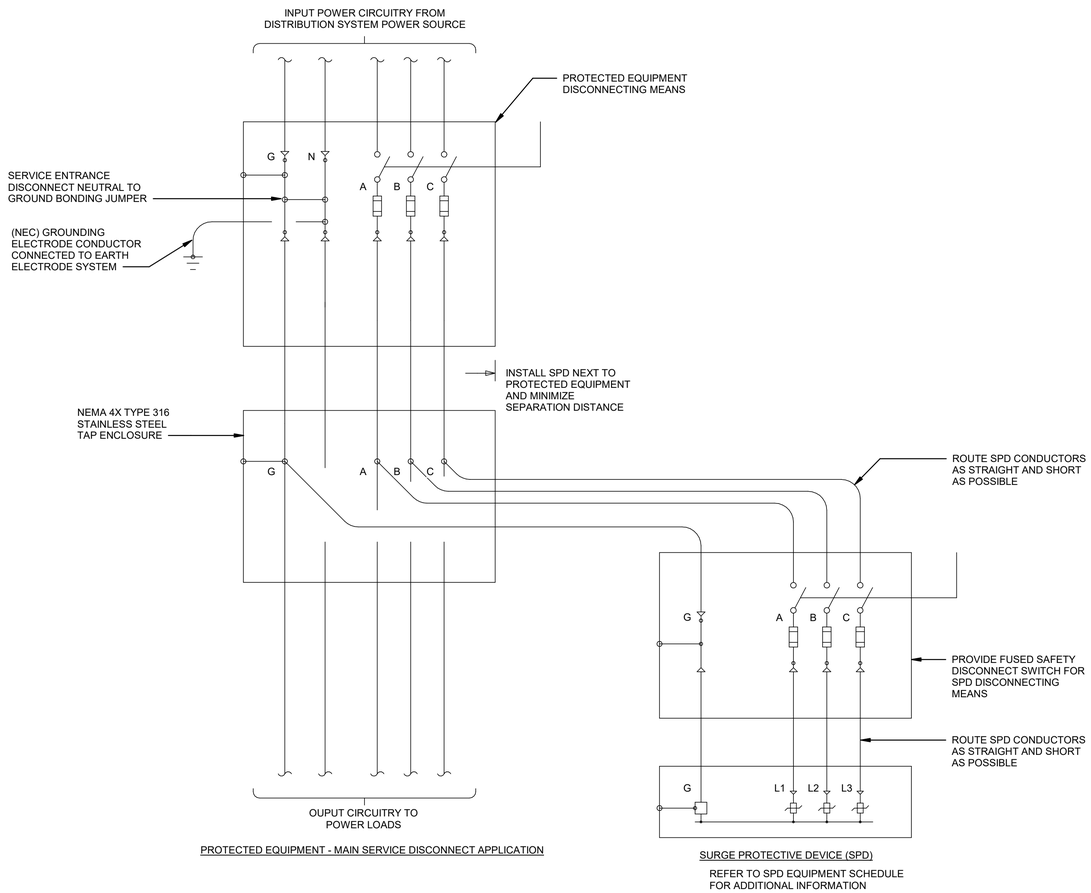

E8 SPD-1 WIRING DIAGRAM DETAIL

E605 NTS

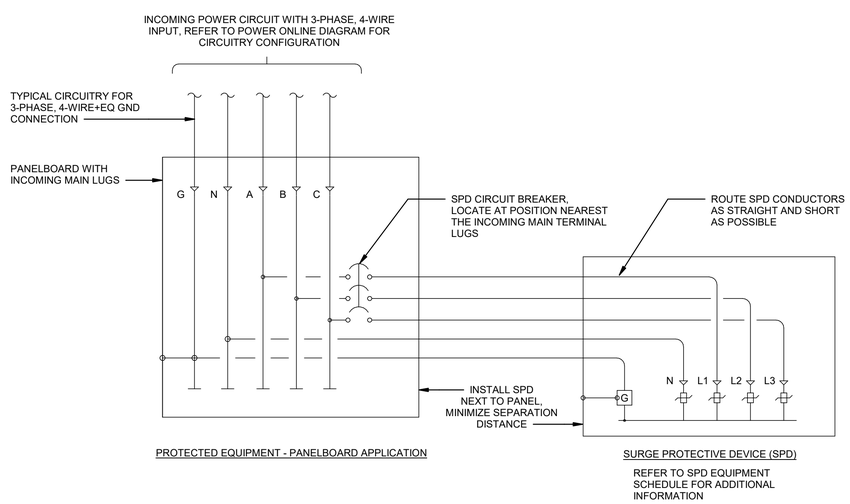

A8 SPD-2 WIRING DIAGRAM DETAIL

E605 NTS

GENERAL SHEET NOTES

A. SPD CONNECTIONS: SPD TERMINALS MUST BE CONNECTED TO THE CORRESPONDING TERMINALS OF THE BRANCH CIRCUIT BREAKER DEVICE AT THE POWER SOURCE DISCONNECTING MEANS. PROVIDE MAXIMUM CONDUCTOR SIZE ALLOWED BY THE SPD MANUFACTURER, BUT DO NOT EXCEED THE INCOMING CIRCUIT PHASE AND GROUNDING CONDUCTOR PERMITTED BY THE PANELBOARD EQUIPMENT. INSTALL CONDUCTORS VIA THE SHORTEST AND MOST DIRECT PATH AS POSSIBLE (WITHOUT LOOPS, SHARP BENDS OR KINKS). CONDUCTOR COLOR CODING MUST MATCH POWER SYSTEM COLOR CODING CONVENTION.

B. CONDUIT SEALING: THE CONDUIT CONNECTING THE SPD ENCLOSURE TO THE POWER SUPPLY PANELBOARD MUST BE SEALED WITH DUCT SEAL OR OTHER UL LISTED NONFLAMMABLE MEDIUM TO PREVENT SOOT FROM ENTERING THE SUPPLY PANELBOARD'S ENCLOSURE IN THE EVENT OF SPD FAILURE.

SURGE PROTECTIVE DEVICE (SPD) SCHEDULE

NO.	EQUIPMENT ID DESIGNATION	MANUFACTURER	MODEL SERIES	SYSTEM VOLTAGE CONFIGURATION	MODEL NO.	ENCLOSURE TYPE	UPSTREAM CIRCUIT BREAKER DEVICE RATING	WIRE SIZE
1	SPD-1	RAYCAP	STRIKESORB-80-A	208Y/120V	120-3Y-A1-3-03-A-SS	A (19.75"H x 19.75"W x 10.5"D)	225A	(5) #4/0 IN 2-1/2" C
2	SPD-2	RAYCAP	STRIKESORB-40-A	208Y/120V	120-3Y-M3-4-03-A-SS	M (12"H x 12"W x 8.5"D)	100A	(5) #2 IN 1-1/2" C

FOR OFFICIAL USE ONLY

PUBLIC AVAILABILITY TO BE DETERMINED UNDER 5 USC 552

COMMONWEALTH OF VIRGINIA
MATHIAS M. BECKER
LIC. NO. 029564
9/12/2025
PROFESSIONAL ENGINEER

JACOBS
1100 N GLEBE RD.
SUITE 500
ARLINGTON, VA 22201

REV.	APPROVED DATE	DESCRIPTION	JCN	REDLINE DATE	APVD

Jacobs

DEPARTMENT OF TRANSPORTATION

FEDERAL AVIATION ADMINISTRATION

CENTRAL SERVICE REGION — FT WORTH, TX

LEEVILLE (LEV) VORTAC REPLACEMENT

ELECTRICAL DETAILS

GRAND ISLE — LEEVILLE (LEV) VORTAC — LA

REVIEWED BY | SUBMITTED BY | APPROVED BY

SUBMITTER'S TITLE | APPROVER'S TITLE

DESIGNED BY J. FRIEDBERG
DRAWN BY J. FRIEDBERG
CHECKED BY M. BECKER

ISSUED BY: ENGINEERING SERVICES TERMINAL

DATE 9/12/2025 | JCN: 1508914

DRAWING NO. LEV - D - VORTAC - E605 | REV.

LEEVILLE VORTAC
GRAND ISLE LOUISIANA

PLOT DATE/TIME: 9/10/2025 4:01:56 PM

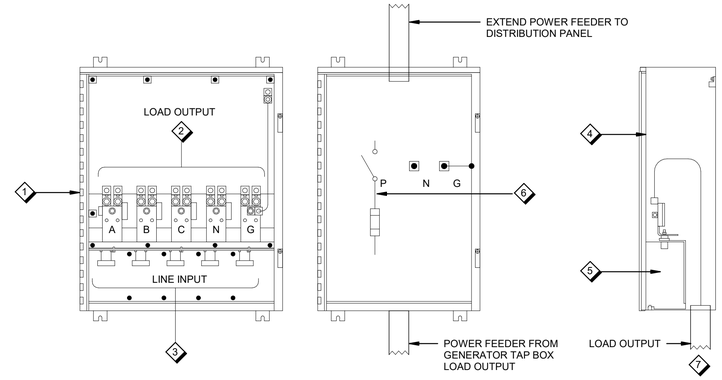

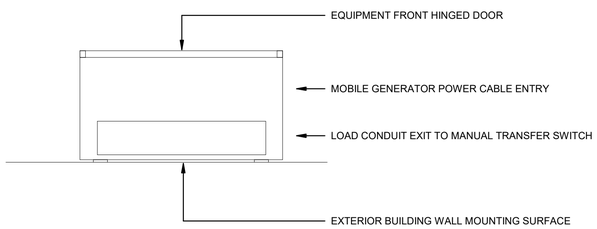

E8 TEMPORARY GENERATOR POWER CONNECTION DETAILS

E606 NTS

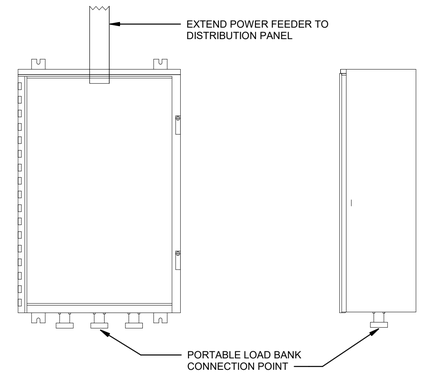

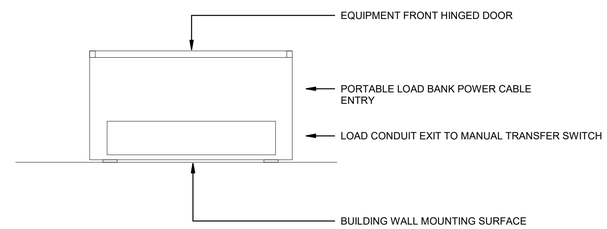

E5 PORTABLE LOAD BANK POWER CONNECTION DETAIL

E606 NTS

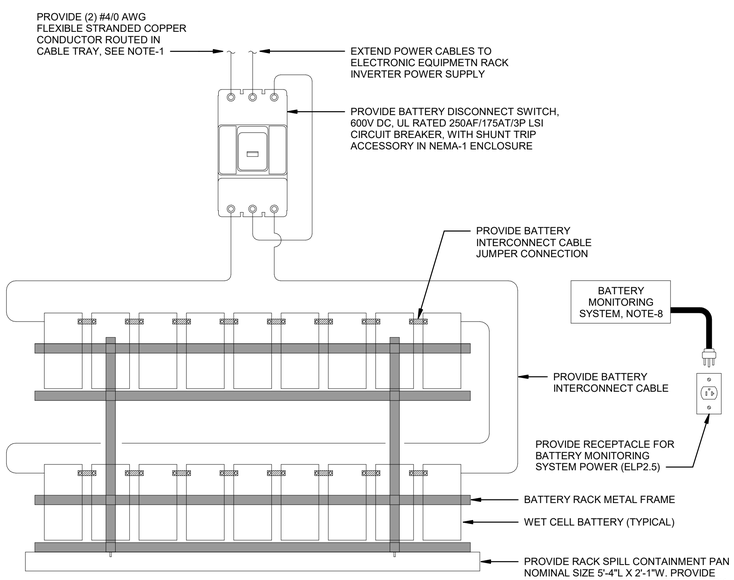

NOTES:

1. PROVIDE BATTERY SYSTEM PRODUCT AND INSTALLATION SUBMITTALS IN ACCORDANCE WITH SPECIFICATION 01 33 00 SUBMITTAL PROCEDURES FOR ALL SYSTEM COMPONENTS. PRODUCT SUBSTITIONS ARE NOT PERMITTED.
2. PROVIDE #4/0AWG, 90 DEG. C WET/DRY, 600V, THHN, TYPE (MTW) FLEXIBLE STRANDED COPPER CONDUCTORS FOR POWER CONNECTION BETWEEN BATTERY RACK, BATTERY DISCONNECT SWITCH, AND ELECTRONIC EQUIPMENT INVERTER POWER SUPPLY RACK.
3. PROVIDE INTERNAL BATTERY RACK WIRING CONSISTING OF #4/0AWG, UL LISTED, TYPE MTW, 105 DEG C, EXTRA FLEXIBLE COPPER CABLES.
4. PROVIDE UL RECOGNIZED, 600V, DC RATED BATTERY JUMPER AND TERMINAL BLOCK CONNECTIONS FOR BATTERY INTERCONNECT WIRING.
5. PROVIDE BATTERY RACK GROUNDING CONNECTIONS CONSISTING OF #1/0AWG COPPER CONDUCTOR WITH TERMINAL LUGS.
6. PROVIDE 18-STRING BATTERIES, TYPE C&D, MODEL KCT-450, 36V UL LISTED 600V, DC FLOODED WET CELL BATTERY.
7. PROVIDE 2-TIER, C&D FLOODED CELL BATTERY RACK WITH (2) 3/8" DIA. HILTI KWIK HUS-EZ (KH- EZ) MECHANICAL ANCHORS WITH EMBEDMENT SIZED IN ACCORDANCE WITH THE BATTERY RACK MANUFACTURER INSTALLATION REQUIREMENTS. PROVIDE MINIMUM SPACING BETWEEN ANCHORS EQUAL TO 11-1/2", INSTALLED WITH GUIDEHOLES AND HORIZONTAL RACK TIE DOWN BARS (2 PER BAR). PROVIDE PLATE WASHERS REQUIRED FOR ANCHOR RESTRAINT WITHIN OVERSIZED GUIDEHOLES.
8. PROVIDE BATTERY MONITORING SYSTEM. MANUFACTURER: CELLWATCH SERIES WITH THERMAL RUNAWAY CONTROLLER (TRC) UNIT, TRC TEMPERATURE AND DC CURRENT SENSOR CABLING AND ACCESSORIES, CELL WATCH DATA COLLECTION (DCM) MODULE(S), DCM INTERCONNECT CABLING AND ACCESSORIES. INSTALL BATTERY MONITORING SYSTEM IN ACCORDANCE WITH THE MANUFACTURER'S WRITTEN INSTRUCTIONS.

A8 ELECTRICAL BATTERY CONNECTION DIAGRAM

E606 NTS

SHEET NOTES

1. PROVIDE OUTDOOR GENERATOR TAP BOX ENCLOSURE, 200 A, 208Y/120V, 3-PHASE, 4-WIRE + GROUND WITH FOLLOWING FEATURES:
   A. EQUIPMENT LISTING: UL-LISTED, UL-1008 SB
   B. ENCLOSURE: NEMA 4X RATED, TYPE 316 STAINLESS STEEL WITH LOCKABLE DOOR FOR SAFETY AND CONTROL ACCESS
2. PROVIDE POWER PHASE, NEUTRAL, AND GROUND CONNECTION FROM MANUAL TRANSFER SWITCH MTS-1, SEE SHEET E602 FOR CONNECTION.
3. PROVIDE COLOR-CODED CAM-LOCK CABLE CONNECTORS FOR MOBILE GENERATOR CONNECTION. PROVIDE HINGED BOTTOM ACCESS DOOR COMPARTMENT FOR CAM-LOCK CABLE CONNECTIONS.
4. PROVIDE DEAD-FRONT BARRIER FOR CONDUCTOR TERMINATION LUG COMPARTMENT
5. PROVIDE ANCHORING ASSEMBLIES TO MOUNT GENERATOR SET TO EXISTING PLATFORM DECK SLAB.
6. PROVIDE 250 VOLT, 200A/3P FUSED SAFETY DISCONNECT SWITCH, FUSED AT 200 A.
7. PROVIDE A MINIMUM 50 FOOT LONG CABLE WITH CAM LOCK CONNECTORS ON BOTH ENDS.

FOR OFFICIAL USE ONLY
PUBLIC AVAILABILITY TO BE DETERMINED UNDER 5 USC 552

COMMONWEALTH OF VIRGINIA
MATHIAS M. BECKER
LIC. NO. 029564
9/12/2025
PROFESSIONAL ENGINEER

JACOBS
1100 N GLEBE RD.
SUITE 500
ARLINGTON, VA 22201

REV.	APPROVED DATE	DESCRIPTION	JCN	REDLINE DATE	APVD

Jacobs

DEPARTMENT OF TRANSPORTATION
FEDERAL AVIATION ADMINISTRATION
CENTRAL SERVICE REGION — FT WORTH, TX

LEEVILLE (LEV) VORTAC REPLACEMENT

ELECTRICAL DETAILS

GRAND ISLE — LEEVILLE (LEV) VORTAC — LA

REVIEWED BY	SUBMITTED BY	APPROVED BY
	SUBMITTER'S TITLE	APPROVER'S TITLE

LEEVILLE VORTAC
GRAND ISLE LOUISIANA

DESIGNED BY J. FRIEDBERG	ISSUED BY	DATE 9/12/2025	JCN: 1508914
DRAWN BY J. FRIEDBERG	ENGINEERING SERVICES TERMINAL	DRAWING NO. LEV - D - VORTAC - E606	REV.
CHECKED BY M. BECKER			

PLOT DATE/TIME: 9/10/2025 4:01:57 PM

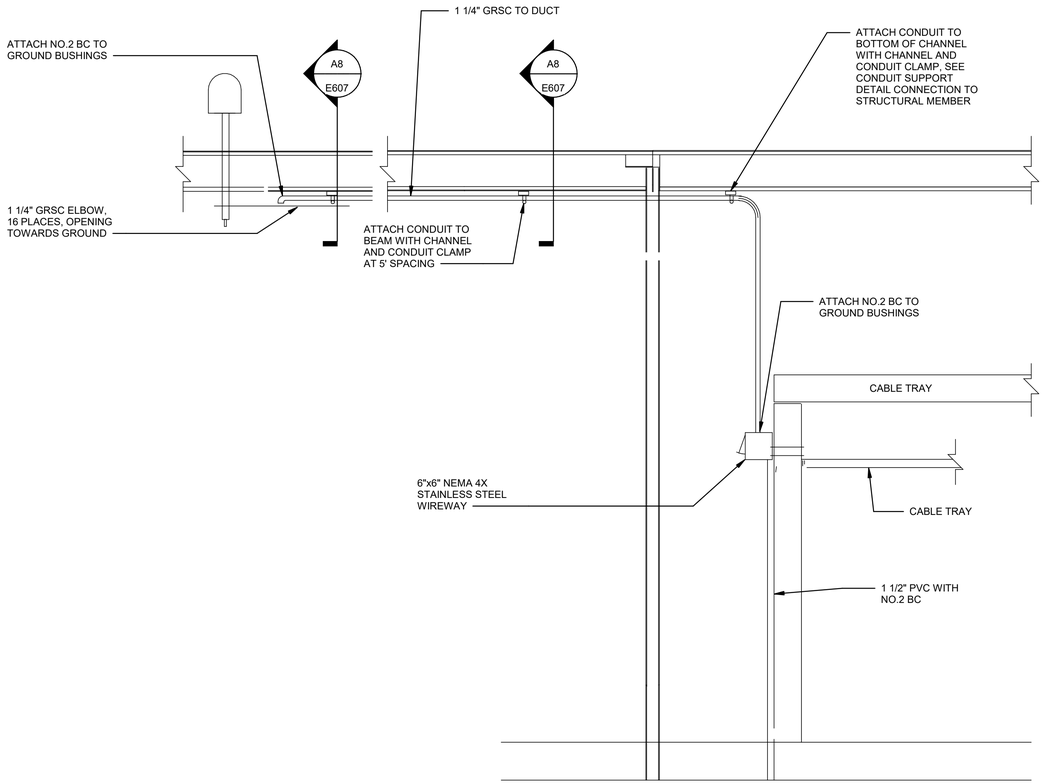

D8 / E607 TYPICAL WALL PENETRATION DETAIL

NTS

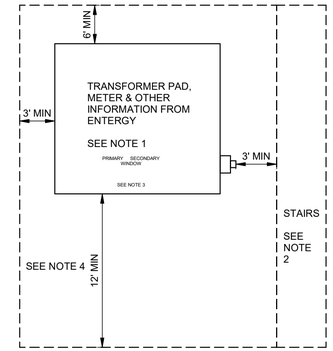

DETAIL NOTES:

1. ENTERGY DESIGN ENGINEERS WILL SIZE THE TRANSFORMER. CONTRACTOR MUST CHECK WITH ENTERGY FOR SIZE, DIMENSIONS, WEIGHT, CONFIGURATION, PRIMARY AND SECONDARY WINDOW, AND FOOT PRINT OF TRANSFORMER, METER INFORMATION, CABLE AND ARMORED OR SCHEDULE 80 CONDUIT REQUIREMENTS, ETC. PLATFORM MUST BE ABLE TO SUPPORT THE TRANSFORMER, CABLE, CONDUIT, ANY POTENTIAL WORKERS AND MATERIAL REQUIRED TO INSTALL AND MAINTAIN THE TRANSFORMER.
2. RAILING AND STAIRS ARE TO BE BUILT TO OSHA STANDARD 29 CFR 1910 SUBPART D - WALKING SURFACES.. STAIRS CAN BE ON ANY SIDE OF THE PLATFORM AS LONG AS THEY, THE RAILS OR ANYTHING ELSE DO NOT ENCROACH ON MINIMUM WORK AREA AROUND THE PAD OR INTERFERE WITH CRANE INSTALLATION/ MAINTENANCE OF TRANSFORMER.
3. PRIMARY AND SECONDARY WINDOW MUST BE ENCLOSED SO NO PERSON OR OBJECT CAN ACCESS THE INTERIOR OF THE TRANSFORMER. CONTRACTOR FURNISHED, INSTALLED AND MAINTAINED ENTERGY APPROVED PLATE BAFFLE/BARRIER OR FENCE REQUIRED. THIS BARRIER OR GATE MUST BE DESIGNED TO BE LOCKABLE BY ENTERGY LOCK AND EASILY REMOVABLE BY ENTERGY PERSONNEL FOR MAINTENANCE.
4. SIDE RAILING THAT IS ACCESSIBLE TO A CRANE MUST BE REMOVABLE IN ORDER TO FACILITATE THE INSTALLATION OF THE TRANSFORMER.

D4 / E607 ELEVATED PADMOUNT TRANSFORMER DETAIL

12" = 1'-0"

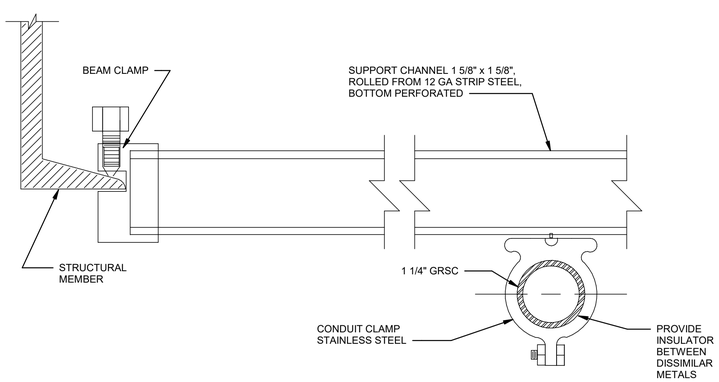

A8 / E607 EXTERIOR CONNECTION TO STRUCTURAL MEMBER DETAIL

NTS

FOR OFFICIAL USE ONLY
PUBLIC AVAILABILITY TO BE DETERMINED UNDER 5 USC 552

COMMONWEALTH OF VIRGINIA
MATHIAS M. BECKER
LIC. NO. 029564
9/12/2025
PROFESSIONAL ENGINEER

JACOBS
1100 N GLEBE RD.
SUITE 500
ARLINGTON, VA 22201

REV.	APPROVED DATE	DESCRIPTION	JCN	REDLINE DATE	APVD

Jacobs

DEPARTMENT OF TRANSPORTATION
FEDERAL AVIATION ADMINISTRATION
CENTRAL SERVICE REGION — FT WORTH, TX

LEEVILLE (LEV) VORTAC REPLACEMENT

ELECTRICAL DETAILS

GRAND ISLE — LEEVILLE (LEV) VORTAC — LA

REVIEWED BY	SUBMITTED BY	APPROVED BY
	SUBMITTER'S TITLE	APPROVER'S TITLE

LEEVILLE VORTAC
GRAND ISLE LOUISIANA

DESIGNED BY	J. FRIEDBERG	ISSUED BY	ENGINEERING SERVICES TERMINAL
DRAWN BY	J. FRIEDBERG	DATE	9/12/2025
CHECKED BY	M. BECKER	JCN:	1508914
DRAWING NO.	LEV - D - VORTAC - E607	REV.	

PLOT DATE/TIME: 9/10/2025 4:01:57 PM

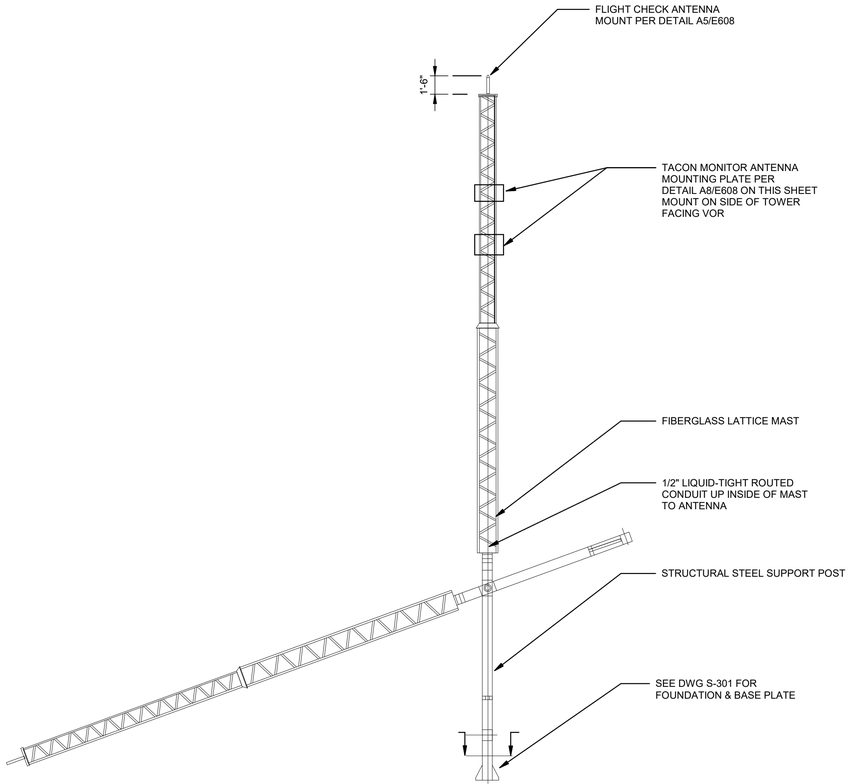

D8 / E608 COUNTER WEIGHTED TACAN MONITOR TOWER DETAIL

NTS

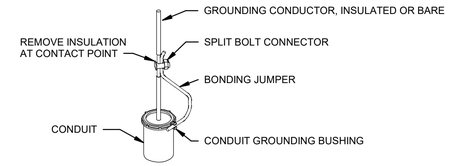

ILLUSTRATIVE EXAMPLE: CONDUIT RACEWAY

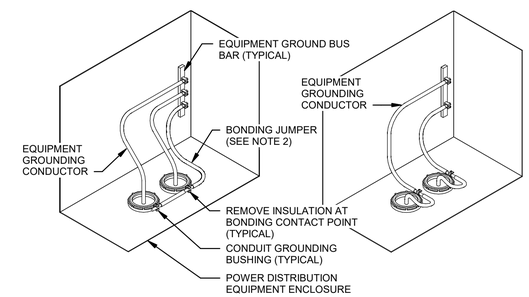

ILLUSTRATIVE EXAMPLES: POWER DISTRIBUTION EQUIPMENT

E5 / E608 BONDING OF GROUNDING CONDUCTOR DETAIL

12" = 1'-0"

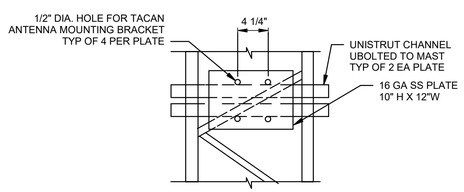

NOTE - 2 MOUNTING PLATES REQUIRED.
COORDINATE PLATE LOCATIONS W/COTR PRIOR TO INSTALLATION.

A8 / E608 TACAN MONITOR MOUNTING PLATE ELEVATION DETAIL

NTS

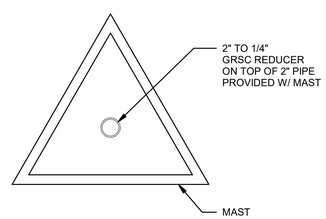

A5 / E608 F/C ANTENNA MOUNT DETAIL

NTS

FOR OFFICIAL USE ONLY
PUBLIC AVAILABILITY TO BE DETERMINED UNDER 5 USC 552

COMMONWEALTH OF VIRGINIA
MATHIAS M. BECKER
LIC. NO. 029564
9/12/2025
PROFESSIONAL ENGINEER

JACOBS
1100 N GLEBE RD.
SUITE 500
ARLINGTON, VA 22201

REV.	APPROVED DATE	DESCRIPTION	JCN	REDLINE DATE	APVD

Jacobs

DEPARTMENT OF TRANSPORTATION
FEDERAL AVIATION ADMINISTRATION
CENTRAL SERVICE REGION — FT WORTH, TX

LEEVILLE (LEV) VORTAC REPLACEMENT

ELECTRICAL DETAILS

GRAND ISLE — LEEVILLE (LEV) VORTAC — LA

REVIEWED BY | SUBMITTED BY | APPROVED BY
SUBMITTER'S TITLE | APPROVER'S TITLE

LEEVILLE VORTAC
GRAND ISLE LOUISIANA

DESIGNED BY J. FRIEDBERG
DRAWN BY J. FRIEDBERG
CHECKED BY M. BECKER
ISSUED BY ENGINEERING SERVICES TERMINAL
DATE 9/12/2025 JCN: 1508914
DRAWING NO. LEV - D - VORTAC - E608
REV.

PLOT DATE/TIME: 9/10/2025 4:01:58 PM

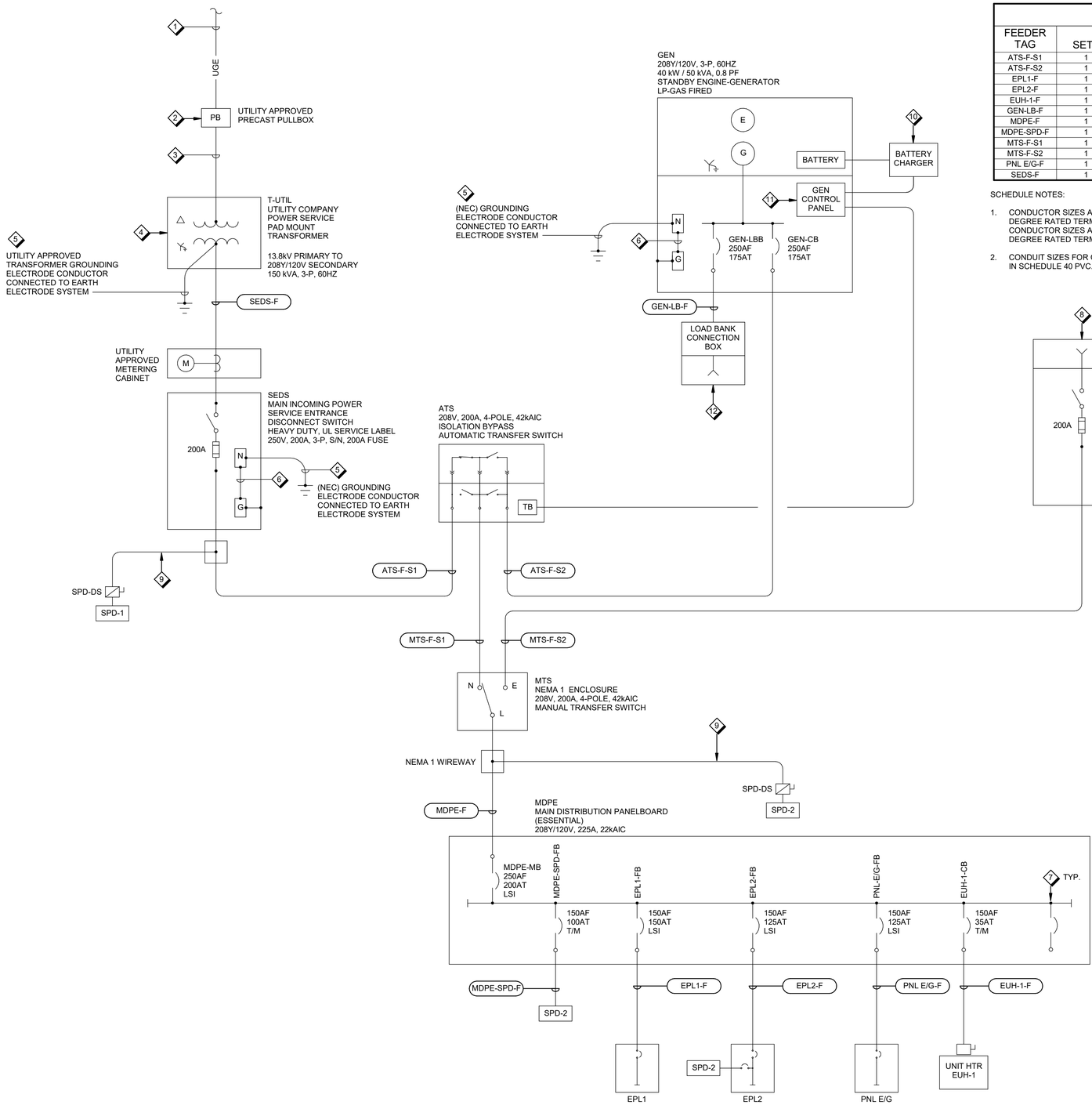

FEEDER SCHEDULE

FEEDER TAG	SETS	WIRE AND CONDUIT
ATS-F-S1	1	(3) #3/0 + #3/0N + #6G IN 2"C
ATS-F-S2	1	(3) #3/0 + #3/0N + #6G IN 2"C
EPL1-F	1	(3) #1/0 + #1/0N + #6G IN 2"C
EPL2-F	1	(3) #1 + #1N + #6G IN 1 1/2"C
EUH-1-F	1	(3) #4 + #6G IN 1"C
GEN-LB-F	1	(3) #3/0 + #6G IN 2"C
MDPE-F	1	(3) #3/0 + #3/0N + #6G IN 2"C
MDPE-SPD-F	1	(3) #1 + #1N + #6G IN 1 1/2"C
MTS-F-S1	1	(3) #3/0 + #3/0N + #6G IN 2"C
MTS-F-S2	1	(3) #3/0 + #3/0N + #6G IN 2"C
PNL E/G-F	1	(3) #1 + #1N + #6G IN 1 1/2"C
SEDS-F	1	(3) #3/0 + #3/0N IN 2"C

SCHEDULE NOTES:

1. CONDUCTOR SIZES ARE BASED ON 60 DEGREE C RATED COPPER CONDUCTORS WITH 60 DEGREE RATED TERMINATIONS FOR FEEDERS RATED 100A AND LESS. OTHER FEEDER CONDUCTOR SIZES ARE BASED ON 75 DEGREE C RATED COPPER CONDUCTORS WITH 75 DEGREE RATED TERMINATIONS.
2. CONDUIT SIZES FOR OUTDOOR UNDERGROUND FEEDERS ARE MINIMUM SIZES FOR THHN/THWN IN SCHEDULE 40 PVC.

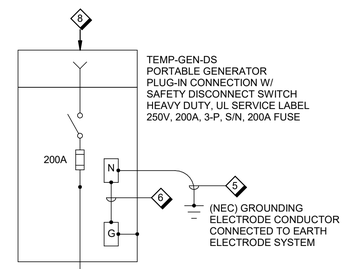

GENERAL SHEET NOTES

A. CONSTRUCTION OF THE UTILITY SERVICE ENTRANCE MUST BE COORDINATED WITH THE ELECTRIC UTILITY COMPANY (ENTERGY). CONTRACTOR MUST OBTAIN THE POWER SERVICE CONNECTION FROM THE UTILITY AND INSTALL DISTRIBUTION SYSTEM IN ACCORDANCE WITH THE UTILITY INSTALLATION REQUIREMENTS.

B. THE SERVICE ENTRANCE INCLUDES A PRIMARY FEEDER EXTENDED FROM THE UTILITY'S DESIGNATED RISER POLE LOCATED AT HIGHWAY 1 INTERSECTION. THE PRIMARY FEEDER WILL BE EXTENDED ALONG THE VOR ACCESS ROAD TO THE PROJECT SITE AND TERMINATED AT PAD MOUNT TRANSFORMER LOCATED ON THE VOR PLATFORM STRUCTURE.

C. PROVIDE A UTILITY APPROVED METERING CABINET AND CONSTRUCT A SECONDARY POWER FEEDER FROM THE SERVICE TRANFORMER TO VOR BUILDING MAIN SERVICE DISCONNECT SWITCH.

D. PROVIDE UTILITY APPROVED IDENTIFICATION AND STRIPE MARKINGS FOR EQUIPMENT AND PRIMARY/SECONDARY DISTRIBUTION CIRCUITS. PROVIDE EQUIPMENT SIGNAGE AND COLOR CODED CONDUCTOR MARKINGS IN ACCORDANCE WITH THE UTILITY'S REQUIREMENTS.

E. PROVIDE NEMA 4X, TYPE 316, STAINLESS STEEL RATED ENCLOSURES FOR ALL EXTERIOR EQUIPMENT.

F. PROVIDE HEAVY DUTY RATED CONSTRUCTION FOR ALL SAFETY DISCONNECT SWITCHES.

G. ALL GROUNDING AND BONDING CONNECTIONS MUST BE INSTALLED IN ACCORDANCE WITH FAA-STD-019 (LATEST EDITION).

H. REFER TO DRAWING E605 FOR SURGE PROTECTIVE DEVICE (SPD) EQUIPMENT CONNECTIONS.

SHEET NOTES ◇

1 PROVIDE UNDERGROUND DUCTBANK SYSTEM FOR THE PRIMARY SERVICE ENTRANCE FEEDER, REFER TO CIVIL DRAWINGS FOR PATHWAY ROUTING. PROVIDE CONDUIT RACEWAY SYSTEM AND CONDUCTORS IN ACCORDANCE WITH THE UTILITY'S INSTALLATION REQUIREMENTS.

2 PROVIDE UTILITY APPROVED UNDERGROUND PULLBOX STRUCTURES ALONG PRIMARY FEEDER DUCTBANK PATHWAY, REFER TO ELECTRICAL SITE PLAN FOR PATHWAY ROUTING.

3 PROVIDE HOT-DIPPED GALVANIZED, RIGID STEEL, CONDUIT RISER EXTENDED FROM GRADE TO TRANFORMER MOUNTING LOCATION AT THE VOR STRUCTURE, REFER TO ELECTRICAL PLAN DRAWINGS FOR ADDITIONAL INFORMATION.

4 TRANSFORMER EQUIPMENT TO BE PROVIDED BY THE ELECTRIC UTILITY. TRANSFORMER WILL BE LOCATED ON THE VOR STRUCTURAL STEEL PLATFORM LEVEL FOR HURRICANE RESILIENCY. PROVIDE STEEL FRAME SKID FOR TRANFORMER MOUNTING INTEGRATED INTO THE STEEL PLATFORM STRUCTURE. REFER TO STRUCTURAL FOR ADDITIONAL INFORMATION.

5 REFER TO POWER SYSTEM GROUNDING DIAGRAM, DRAWING E-802, FOR ADDITIONAL INFORMATION.

6 PROVIDE (NEC) RATED NEUTRAL TO GROUND BONDING JUMPER CONNECTION AT SERVICE ENTRANCE EQUIPMENT. REFER TO POWER SYSTEM GROUNDING DIAGRAM FOR ADDITIONAL INFORMATION.

7 REFER TO ELECTRICAL PANELBOARD SCHEDULES FOR ADDITIONAL SPARE/SPACE CIRCUIT BREAKER PROVISIONS.

8 PROVIDE CAM-LOCK CONFIGURED CONNECTION BOX FOR TEMPORARY GENERATOR POWER TIE-IN CONNECTION, REFER TO DETAIL E8/E606 FOR ADDITIONAL INFORMATION.

9 REFER TO SPD SCHEDULE ON SHEET E605 FOR SPD WIRING SIZES.

10 PROVIDE 120V, 20A/1P POWER BRANCH CIRCUIT CONNECTION FOR E/G BATTERY CHARGING EQUIPMENT, REFER TO ELECTRICAL PLANS FOR ADDITIONAL INFORMATION.

11 PROVIDE E/G AND ATS CONTROL INTERFACE WIRING CONNECTIONS, REFER TO DRAWING E803, FOR ADDITIONAL INFORMATION.

12 PROVIDE CAM-LOCK CONFIGURED CONNECTION BOX FOR E/G LOAD BANK POWER CONNECTION, REFER TO DETAIL E5/E606, FOR ADDITIONAL INFORMATION.

A8 ELECTRICAL POWER ONE-LINE DIAGRAM

E801 NTS

FOR OFFICIAL USE ONLY
PUBLIC AVAILABILITY TO BE DETERMINED UNDER 5 USC 552

JACOBS
1100 N GLEBE RD.
SUITE 500
ARLINGTON, VA 22201

REV.	APPROVED DATE	DESCRIPTION	JCN	REDLINE DATE	APVD

COMMONWEALTH OF VIRGINIA
MATHIAS M. BECKER
LIC. NO. 029564
9/12/2025
PROFESSIONAL ENGINEER

DEPARTMENT OF TRANSPORTATION
FEDERAL AVIATION ADMINISTRATION
CENTRAL SERVICE REGION — FT WORTH, TX

LEEVILLE (LEV) VORTAC REPLACEMENT

ELECTRICAL POWER ONE-LINE DIAGRAM

GRAND ISLE — LEEVILLE (LEV) VORTAC — LA

REVIEWED BY | SUBMITTED BY | APPROVED BY
SUBMITTER'S TITLE | APPROVER'S TITLE

LEEVILLE VORTAC
GRAND ISLE LOUISIANA

DESIGNED BY M. BECKER
DRAWN BY M. BECKER
CHECKED BY E. ZIMMERMAN

ISSUED BY ENGINEERING SERVICES TERMINAL

DATE 9/12/2025 | JCN: 1508914
DRAWING NO. LEV - D - VORTAC - E801 | REV.

PLOT DATE/TIME: 9/10/2025 4:01:58 PM

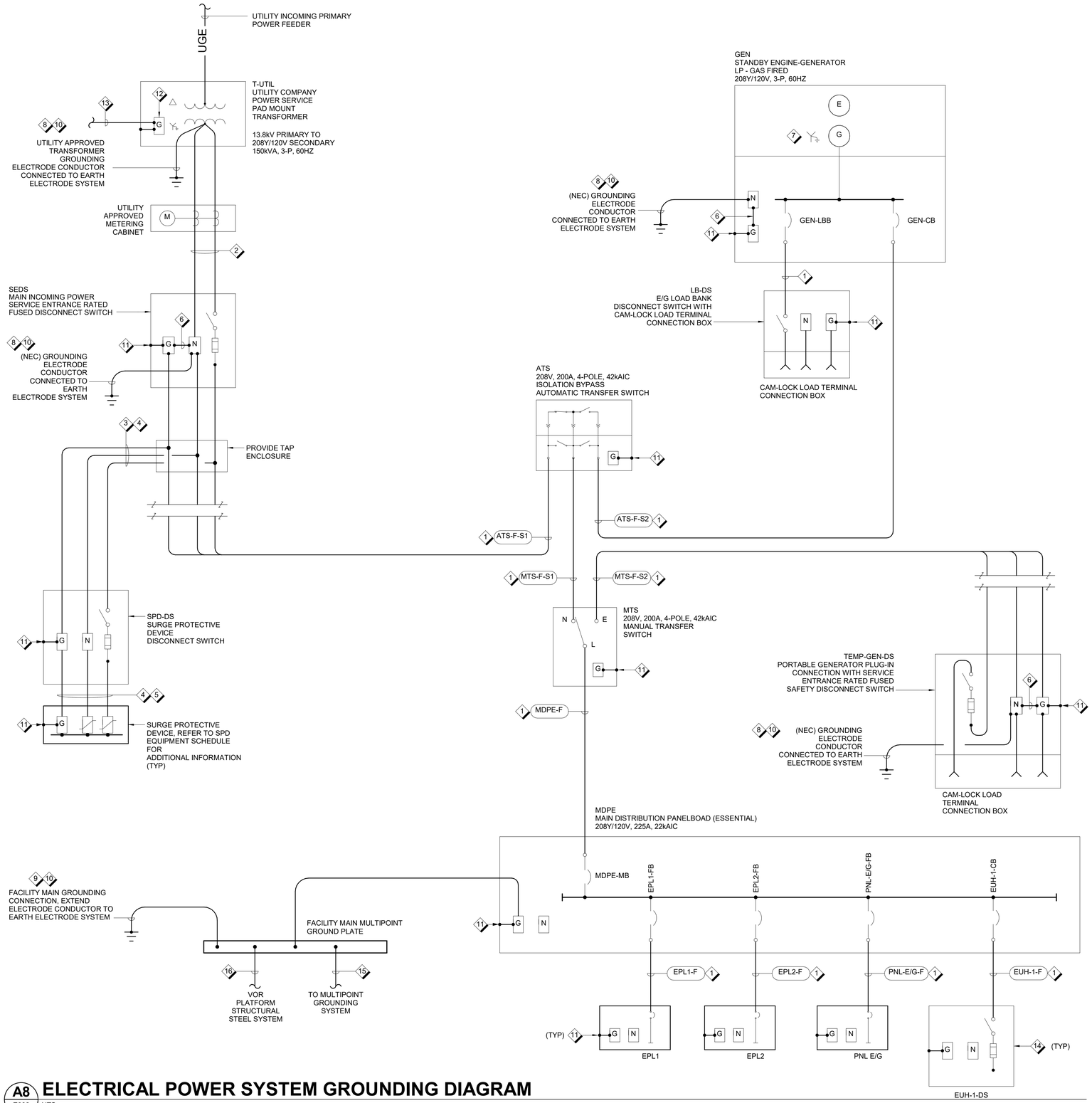

GENERAL SHEET NOTES

A. THE POWER SYSTEM GROUNDING DIAGRAM IS ILLUSTRATIVE AND DEPICTS CONFIGURATION FOR THE DISTRIBUTION SYSTEM'S GROUNDING AND BONDING CONNECTIONS AND INTERFACE WITH THE FACILITY'S MULTIPOINT GROUNDING SYSTEM.

B. ALL GROUNDING AND BONDING CONNECTIONS MUST BE INSTALLED IN ACCORDANCE WITH FAA-STD-019 (LATEST EDITION) AND NEC REQUIREMENTS.

C. REFER TO THE GROUNDING SYSTEM PLAN DRAWINGS FOR LIGHTNING PROTECTION SYSTEM REQUIREMENTS.

SHEET NOTES

1 POWER FEEDER CONSISTING OF PHASE, NEUTRAL, AND EQUIPMENT GROUNDING CONDUCTORS IN CONDUIT WITH GROUNDING BUSHINGS.

2 NEC RATED POWER SERVICE ENTRANCE FEEDER CONSISTING OF PHASE AND NEUTRAL CONDUCTORS IN CONDUIT WITH GROUNDING BUSHINGS.

3 SPD POWER CONNECTION CONSISTING OF PHASE, NEUTRAL, AND EQUIPMENT GROUNDING CONDUCTORS IN CONDUIT/RACEWAY WITH GROUNDING BUSHINGS. INSTALL SPD AND ASSOCIATED SAFETY DISCONNECT SWITCH AS CLOSE AS POSSIBLE TO THE PROTECTED EQUIPMENT. MAKE CONDUCTOR CONNECTIONS AS STRAIGHT AND SHORT AS POSSIBLE. PROVIDE UL LISTED TERMINAL CONNECTORS IDENTIFIED FOR THE WIRE SIZE AND CONDUCTOR TYPE USED.

4 INSTALL THE MAXIMUM CONDUCTOR WIRE SIZE ALLOWED BY THE SPD MANUFACTURER, BUT DO NOT EXCEED THE INCOMING CIRCUIT PHASE SIZE PERMITTED BY THE PROTECTED EQUIPMENT SERVICE DISCONNECT SWITCH).

5 PROVIDE CONDUIT SEALING MATERIAL AT CONDUIT CONNECTING THE SPD ENCLOSURE TO SERVICE DISCONNECT SWITCH. PROVIDE UL LISTED NONFLAMMABLE, INORGANIC POTTING MATERIAL TO PREVENT SOOT FROM ENTERING THE PROTECTED EQUIPMENT IN THE EVENT OF SPD FAILURE.

6 PROVIDE NEC RATED BONDING JUMPER BETWEEN THE NEUTRAL BUS AND EQUIPMENT GROUNDING BUS.

7 PROVIDE GENERATOR NEUTRAL TO GROUND BONDING JUMPER CONNECTION IN ACCORDANCE WITH THE E/G MANUFACTURER'S INSTALLATION INSTRUCTIONS AND NEC. CONFIGURE E/G AS A SEPARATELY DERIVED POWER SOURCE.

8 PROVIDE #4/0AWG GROUNDING ELECTRODE CONDUCTOR AND CONNECT TO GROUND ROD AT THE FACILITY EARTH ELECTRODE SYSTEM (EES).

9 PROVIDE #500kCMIL GROUNDING CONDUCTOR AND CONNECT TO GROUND ROD AT THE FACILITY EARTH ELECTRODE SYSTEM (EES). REFER TO MULTIPOINT GROUNDING RISER DIAGRAM FOR ADDITIONAL INFORMATION.

10 REFER TO GROUNDING SYSTEM DRAWINGS FOR EES CONFIGURATION. PROVIDE GROUND ROD INSPECTION PIT WHERE THE GROUNDING ELECTRODE CONDUCTOR IS CONNECTED TO THE GROUND ROD. PROVIDE EXOTHERMIC WELD CONNECTION FOR CONDUCTOR TO ROD TERMINATIONS.

11 PROVIDE GROUND BONDING CONNECTION FOR EQUIPMENT ENCLOSURE IN ACCORDANCE WITH THE EQUIPMENT MANUFACTURER'S INSTALLATION INSTRUCTIONS AND NEC.

12 PROVIDE TRANSFORMER GROUNDING AND BONDING CONNECTIONS IN ACCORDANCE WITH THE UTILITY'S INSTALLATION REQUIREMENTS.

13 PROVIDE #4/0AWG GROUND BONDING CONNECTION TO THE FACILITY'S PLATFORM STRUCTURAL STEEL SYSTEM IN ACCORDANCE WITH THE UTILITY'S INSTALLATION REQUIREMENTS.

14 TYPICAL EQUIPMENT POWER CONNECTION, PROVIDE POWER GROUNDING AND BONDING CONNECTIONS IN ACCORDANCE WITH THE EQUIPMENT MANUFACTURER'S INSTALLATION INSTRUCTIONS AND NEC.

15 REFER TO THE FACILITY'S MULTIPOINT GROUNDING SYSTEM RISER DIAGRAM FOR CONTINUATION.

16 PROVIDE #4/0AWG GROUND BONDING CONNECTION TO THE FACILITY'S PLATFORM STRUCTURAL STEEL SYSTEM, REFER TO THE GROUNDING SYSTEM DRAWINGS FOR ADDITIONAL INFORMATION.

FOR OFFICIAL USE ONLY
PUBLIC AVAILABILITY TO BE DETERMINED UNDER 5 USC 552

COMMONWEALTH OF VIRGINIA
MATHIAS M. BECKER
LIC. NO. 029564
9/12/2025
PROFESSIONAL ENGINEER

JACOBS
1100 N GLEBE RD.
SUITE 500
ARLINGTON, VA 22201

REV.	APPROVED DATE	DESCRIPTION	JCN	REDLINE DATE	APVD

Jacobs

DEPARTMENT OF TRANSPORTATION
FEDERAL AVIATION ADMINISTRATION
CENTRAL SERVICE REGION — FT WORTH, TX

LEEVILLE (LEV) VORTAC REPLACEMENT

ELECTRICAL POWER SYSTEM GROUNDING DIAGRAM

GRAND ISLE — LEEVILLE (LEV) VORTAC — LA

REVIEWED BY	SUBMITTED BY	APPROVED BY
	SUBMITTER'S TITLE	APPROVER'S TITLE

LEEVILLE VORTAC
GRAND ISLE LOUISIANA

DESIGNED BY M. BECKER	ISSUED BY	DATE 9/12/2025	JCN: 1508914
DRAWN BY M. BECKER	ENGINEERING SERVICES TERMINAL	DRAWING NO. LEV - D - VORTAC - E802	REV.
CHECKED BY E. ZIMMERMAN			

A8
E802
NTS

ELECTRICAL POWER SYSTEM GROUNDING DIAGRAM

PLOT DATE/TIME: 9/10/2025 4:01:59 PM

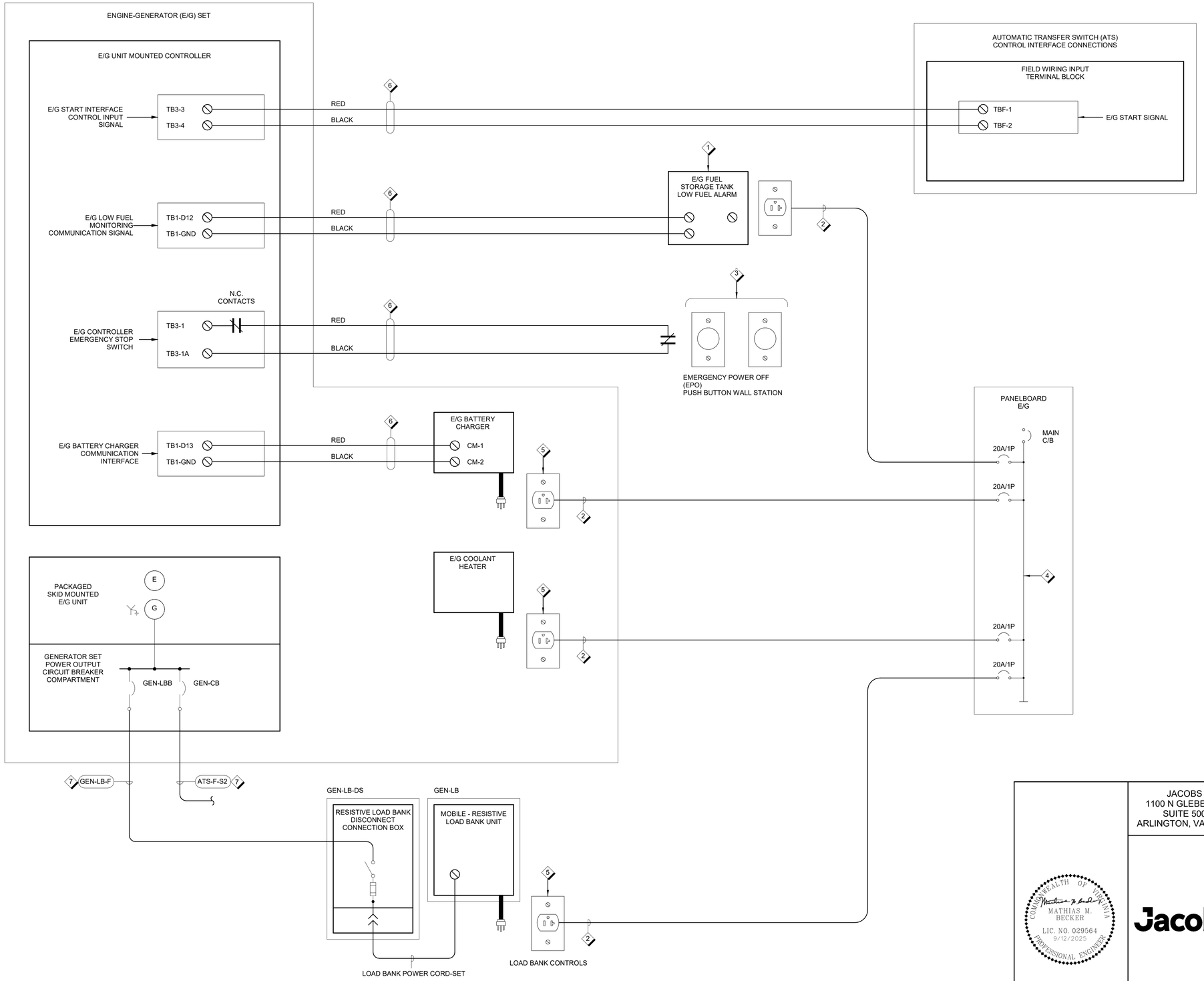

GENERAL SHEET NOTES

A. DRAWING DEPICTS AN ILLUSTRATIVE CONNECTION DIAGRAM FOR THE E/G AND ATS DISTRIBUTION SYSTEM. CONTRACTOR MUST COORDINATE ALL FIELD CONTROL AND POWER WIRING WITH APPROVED EQUIPMENT SUBMITTALS IN ACCORDANCE WITH THE EQUIPMENT MANUFACTURER'S INSTALLATION REQUIREMENTS.

B. REFER TO POWER DRAWING E801, POWER ONE-LINE DIAGRAM FOR DISTRIBUTION SYSTEM CONFIGURATION.

C. PROVIDE WIRING AND GROUNDING FOR GENERATOR ACCESSORIES IN ACCORDANCE WITH MANUFACTUER'S INSTALLATION REQUIREMENTS.

SHEET NOTES ◇

1 LPG FUEL STORAGE TANK MONITORING PANEL LOCATED IN THE E/G ROOM, PROVIDE POWER AND CONTROL WIRING IN ACCORDANCE WITH THE EQUIPMENT MANUFACTURER'S INSTALLATION REQUIREMENTS.

2 PROVIDE 120VOLT, 20A/1P BRANCH CIRCUIT WITH (3) #12AWG CONDUCTOR IN 3/4" CONDUIT, REFER TO POWER DRAWINGS FOR ADDITIONAL INFORMATION.

3 PROVIDE EPO SWITCHES LOCATED AT THE ENTRANCE TO THE E/G ROOM AND AT THE INTERIOR OF THE ELECTRONIC EQUIPMENT, REFER TO POWER DRAWING FOR SWITCH MOUNTING LOCATIONS.

4 PANELBOARD E/G INTERIOR CONNECTIONS ARE SHOWN FOR REFERENCE ONLY, REFER TO PANELBOARD SCHEDULE DRAWING FOR PANEL CIRCUITRY CONFIGURATION.

5 PROVIDE DEDICATED NEMA 5-20R SIMPLEX RECEPTACLE FOR EQUIPMENT INPUT POWER CORD CONNECTION.

6 PROVIDE (2) #12AWG CONTROL INTERFACE WIRING IN CONDUIT IN ACCORDANCE WITH EQUIPMENT MANUFACTURER'S INSTALLATION REQUIREMENTS.

7 PROVIDE POWER FEEDER FROM E/G UNIT MOUNTED CIRCUIT BREAKERS, REFER TO DRAWING E801 FOR POWER ONE-LINE DIAGRAM FOR CIRCUITRY REQUIREMENTS.

FOR OFFICIAL USE ONLY
PUBLIC AVAILABILITY TO BE DETERMINED UNDER 5 USC 552

JACOBS
1100 N GLEBE RD.
SUITE 500
ARLINGTON, VA 22201

REV.	APPROVED DATE	DESCRIPTION	JCN	REDLINE DATE	APVD

COMMONWEALTH OF VIRGINIA
MATHIAS M. BECKER
LIC. NO. 029564
9/12/2025
PROFESSIONAL ENGINEER

Jacobs

DEPARTMENT OF TRANSPORTATION
FEDERAL AVIATION ADMINISTRATION
CENTRAL SERVICE REGION — FT WORTH, TX

LEEVILLE (LEV) VORTAC REPLACEMENT

ELECTRICAL E/G AND ATS EQUIPMENT INTERCONNECT CONTROL DIAGRAM

GRAND ISLE — LEEVILLE (LEV) VORTAC — LA

REVIEWED BY	SUBMITTED BY	APPROVED BY
	SUBMITTER'S TITLE	APPROVER'S TITLE

DESIGNED BY: M. BECKER
DRAWN BY: M. BECKER
CHECKED BY: E. ZIMMERMAN
ISSUED BY: ENGINEERING SERVICES TERMINAL
DATE: 9/12/2025
JCN: 1508914
DRAWING NO.: LEV - D - VORTAC - E803
REV.

LEEVILLE VORTAC
GRAND ISLE LOUISIANA

A8 / E803 **ELECTRICAL E/G AND ATS EQUIPMENT INTERCONNECT CONTROL DIAGRAM**
NTS

PLOT DATE/TIME: 9/10/2025 4:01:59 PM

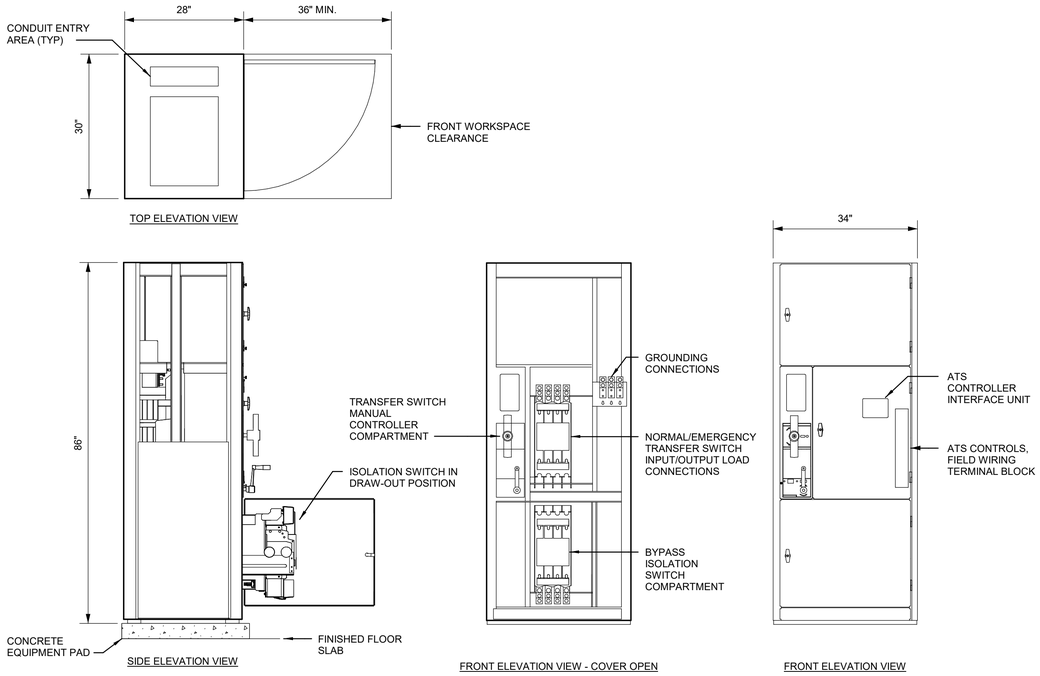

E8 / E804 ELECTRICAL ATS EQUIPMENT LAYOUT DIAGRAM

NTS

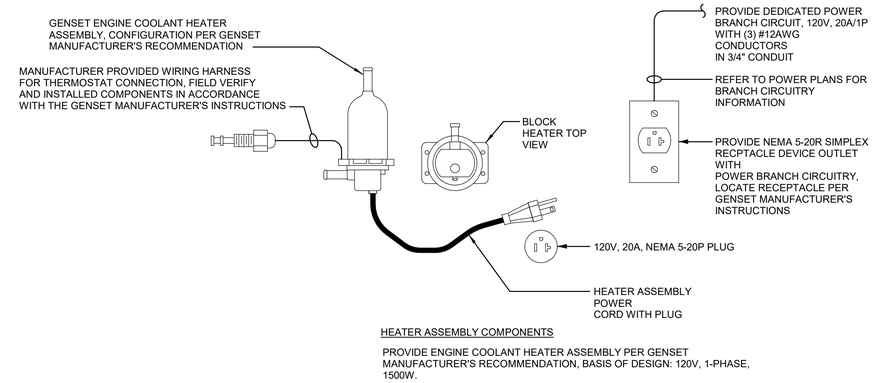

F4 / E804 ELECTRICAL E/G COOLANT HEATER ASSEMBLY CONNECTION

NTS

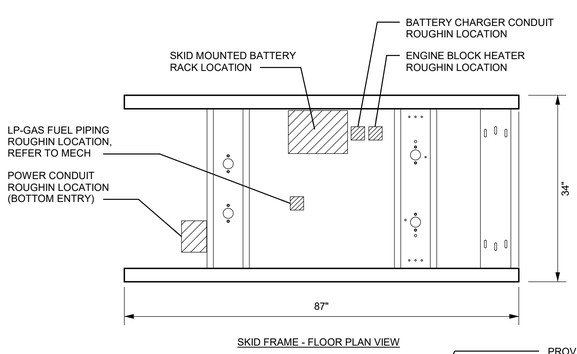

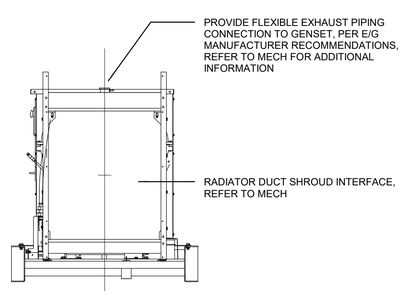

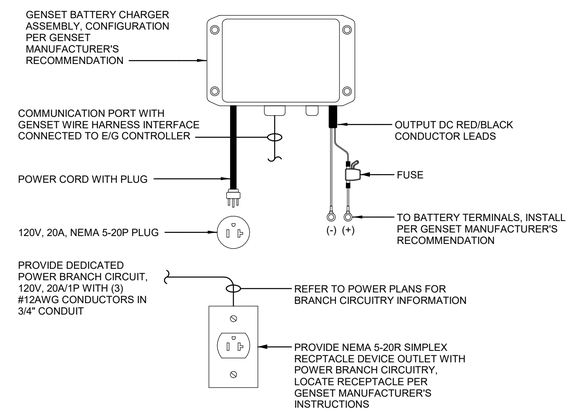

C4 / E804 ELECTRICAL E/G BATTERY CHARGER ASSEMBLY CONNECTION

NTS

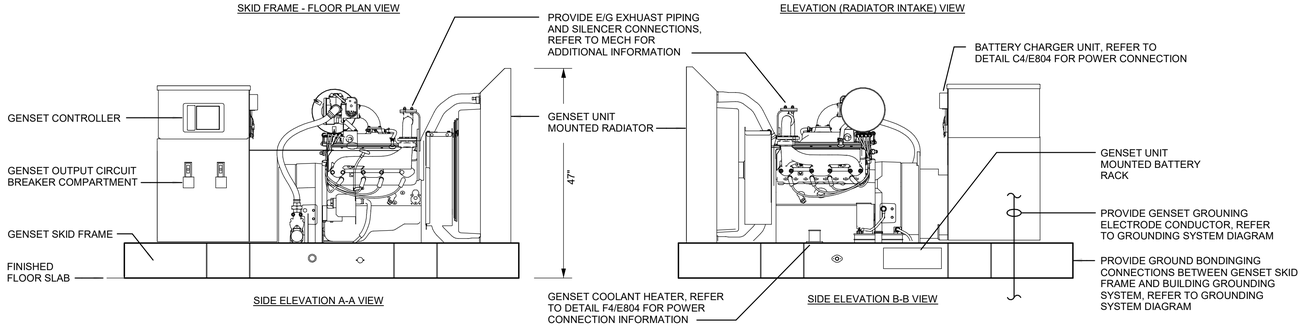

A8 / E804 ELECTRICAL ENGINE GENERATOR EQUIPMENT LAYOUT DIAGRAM

NTS

FOR OFFICIAL USE ONLY

PUBLIC AVAILABILITY TO BE DETERMINED UNDER 5 USC 552

COMMONWEALTH OF VIRGINIA
MATHIAS M. BECKER
LIC. NO. 029564
9/12/2025
PROFESSIONAL ENGINEER

JACOBS
1100 N GLEBE RD.
SUITE 500
ARLINGTON, VA 22201

REV.	APPROVED DATE	DESCRIPTION	JCN	REDLINE DATE	APVD

DEPARTMENT OF TRANSPORTATION
FEDERAL AVIATION ADMINISTRATION
CENTRAL SERVICE REGION — FT WORTH, TX

LEEVILLE (LEV) VORTAC REPLACEMENT

ELECTRICAL E/G AND ATS EQUIPMENT LAYOUT DIAGRAMS

GRAND ISLE — LEEVILLE (LEV) VORTAC — LA

REVIEWED BY	SUBMITTED BY	APPROVED BY
	SUBMITTER'S TITLE	APPROVER'S TITLE

LEEVILLE VORTAC
GRAND ISLE LOUISIANA

DESIGNED BY: M. BECKER
DRAWN BY: M. BECKER
CHECKED BY: E. ZIMMERMAN

ISSUED BY: ENGINEERING SERVICES TERMINAL

DATE: 9/12/2025 — JCN: 1508914

DRAWING NO.: LEV - D - VORTAC - E804 — REV.

PLOT DATE/TIME: 9/10/2025 4:02:00 PM

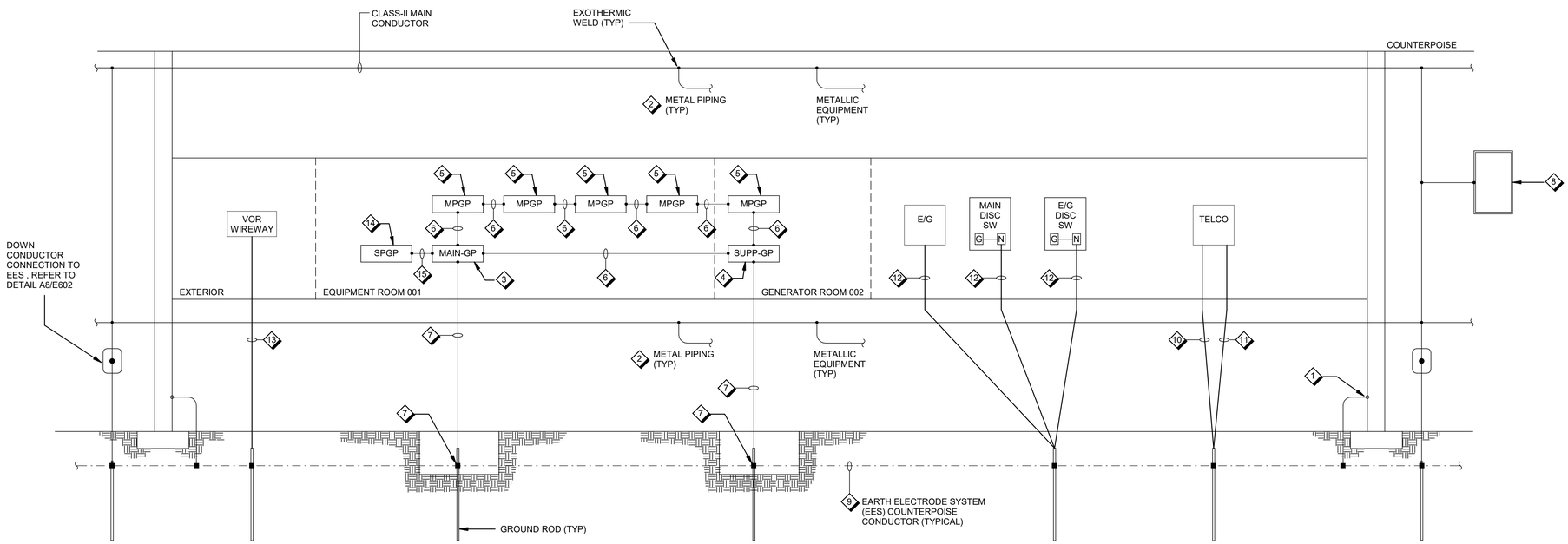

D8 FACILITY SIGNAL REFERENCE STRUCTURE (SRS) - GROUNDING RISER DIAGRAM

E805 NTS

GENERAL SHEET NOTES

A. REFER TO DRAWINGS E131 AND E132 FOR SYSTEM LAYOUT INFORMATION.

B. ALL GROUNDING AND BONDING CONNECTIONS MUST BE INSTALLED IN ACCORDANCE WITH FAA-STD-019 (LATEST EDITION).

SHEET NOTES

1. PROVIDE GROUNDING CONNECTION(S) TO BUILDING STRUCTURAL STEEL COLUMNS AND BEAM MEMBERS. BOND BUILDING HORIZONTAL AND VERTICAL MAJOR STRUTURAL STEEL ELEMENTS TOGETHER.
2. BOND LONG RUNS OF CONDUITS AND PIPES UNDERNEATH COUNTERPOISE AND SHELTER PLATFORM GRATING TO NEAREST COLUMN OR GIRDER OR BEAM ONCE EVERY 100 FEET.
3. PROVIDE MAIN GROUND PLATE.
4. PROVIDE SUPPLEMENTAL GROUND PLATE.
5. PROVIDE MULTIPOINT GROUND PLATE.
6. PROVIDE 1-#4/0 AWG CONDUCTOR, COLOR-CODED GREEN WITH AN ORANGE TRACER.
7. PROVIDE 1-500 kCMIL CONDUCTOR, COLOR-CODED GREEN WITH RED TRACERS, TO EES. BOND TO GROUND ROD WITH AN EXOTHERMIC WELD.
8. BOND EXTERIOR ISOLATED METALLIC PARTS THAT ARE WITHIN 6'-0" OF THE LIGHTNING PROTECTION SYSTEM CONDUCTOR.
9. PROVIDE 1-#4/0 AWG BARE COPPER COUNTERPOISE CONDUCTOR.
10. PROVIDE 1-#4 AWG CONDUCTOR, COLOR-CODED GREEN WITH A RED TRACER.
11. PROVIDE 1-#2 AWG BARE COPPER CONDUCTOR.
12. PROVIDE 1-#1/0 AWG INSULATED COPPER CONDUCTOR.
13. PROVIDE #2 AWG BARE COPPER CONDUCTOR AND #4/0 AWG INSULATED COPPER CONDUCTOR, COLOR-CODED GREEN, FROM VOR CABLE EXTERNAL METAL ENCLOSURE TO EES. EXOTHERMICALLY WELD #2 AWG CONDUCTOR TO WIREWAY ENCLOSURE. SEAL BOND TO THE STEEL FRAME WITH AN APPROPRIATE CORROSION INHIBITOR.
14. PROVIDE SINGLE POINT GROUND PLATE.
15. PROVIDE 1-#4/0 AWG CONDUCTOR, COLOR-CODED GREEN WITH A YELLOW TRACER.

FOR OFFICIAL USE ONLY
PUBLIC AVAILABILITY TO BE DETERMINED UNDER 5 USC 552

COMMONWEALTH OF VIRGINIA
MATHIAS M. BECKER
LIC. NO. 029564
9/12/2025
PROFESSIONAL ENGINEER

JACOBS
1100 N GLEBE RD.
SUITE 500
ARLINGTON, VA 22201

REV.	APPROVED DATE	DESCRIPTION	JCN	REDLINE DATE	APVD

Jacobs

DEPARTMENT OF TRANSPORTATION
FEDERAL AVIATION ADMINISTRATION
CENTRAL SERVICE REGION — FT WORTH, TX

LEEVILLE (LEV) VORTAC REPLACEMENT

FACILITY SIGNAL REFERENCE STRUCTURE (SRS) - GROUNDING RISER DIAGRAM

GRAND ISLE — LEEVILLE (LEV) VORTAC — LA

REVIEWED BY	SUBMITTED BY	APPROVED BY
	SUBMITTER'S TITLE	APPROVER'S TITLE

LEEVILLE VORTAC
GRAND ISLE LOUISIANA

DESIGNED BY J. FRIEDBERG	ISSUED BY	DATE 9/12/2025	JCN: 1508914
DRAWN BY J. FRIEDBERG	ENGINEERING SERVICES TERMINAL	DRAWING NO. LEV - D - VORTAC - E805	REV.
CHECKED BY M. BECKER			

PLOT DATE/TIME: 9/10/2025 4:02:01 PM

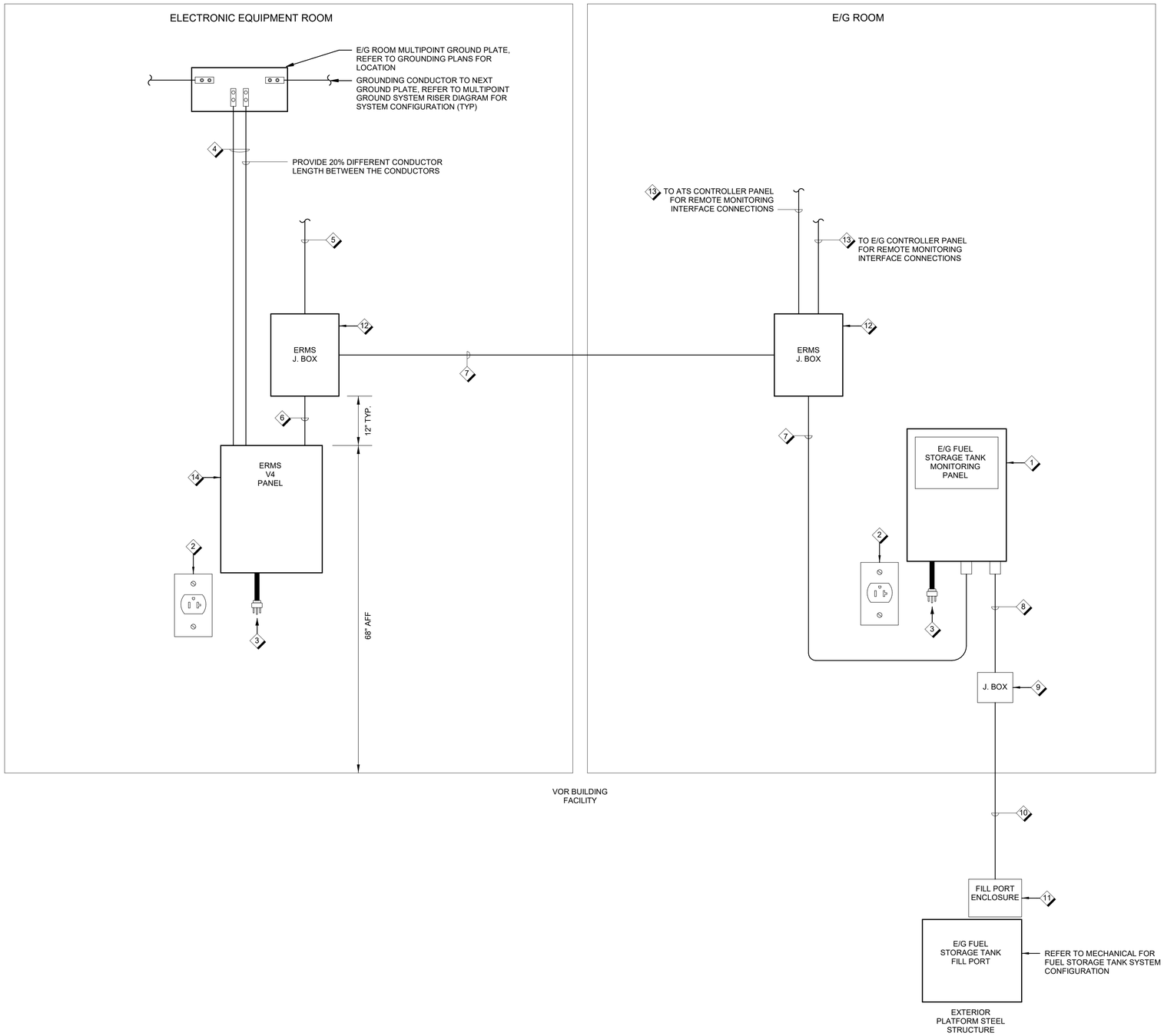

GENERAL SHEET NOTES

A. DRAWING DEPICTS AN ILLUSTRATIVE CONNECTION DIAGRAM FOR THE E/G AND ATS DISTRIBUTION SYSTEM. CONTRACTOR MUST COORDINATE ALL FIELD CONTROL AND POWER WIRING WITH APPROVED EQUIPMENT SUBMITTALS IN ACCORDANCE WITH THE EQUIPMENT MANUFACTURER'S INSTALLATION REQUIREMENTS.

B. REFER TO POWER DRAWING E801, POWER ONE-LINE DIAGRAM FOR DISTRIBUTION SYSTEM CONFIGURATION.

SHEET NOTES

1 LPG FUEL STORAGE TANK MONITORING PANEL LOCATED IN THE E/G ROOM, PROVIDE POWER AND CONTROL WIRING IN ACCORDANCE WITH THE EQUIPMENT MANUFACTURER'S INSTALLATION REQUIREMENTS.

2 PROVIDE 120VOLT, 20A/1P BRANCH CIRCUIT WITH (3) #12AWG CONDUCTOR IN 3/4" CONDUIT, REFER TO POWER DRAWINGS FOR ADDITIONAL INFORMATION. PROVIDE NEMA 5-20R DUPLEX RECEPTACLE.

3 PROVIDE DEDICATED POWER RECEPTACLE OUTLET DEVICE FOR EQUIPMENT INPUT POWER CORD CONNECTION.

4 PROVIDE (2) #2 AWG INSULATED MULTIPOINT GROUNDING CONDUCTORS. COORDINATE ERMS PANEL GROUNDING AND BONDING CONNECTIONS WITH THE COR. THE ERMS PANEL REQUIRES GROUNDING TO A FACILITY MULTIPOINT GROUNDING SYSTEM GROUND PLATE WITH TWO GROUND CONDUCTORS THAT ARE 20% DIFFERENCE IN LENGTH. PROVIDE HYDRAULIC PRESSURE CRIMPING TOOL FOR CONDUCTOR TERMINAL LUG (2-HOLE LUG TYPE) CONNECTIONS. THE INSTALLATION MUST BE FIELD COORDINATED WITH THE COR AND COMPLY WITH FAA-STD-019 (LATEST VERSION) REQUIREMENTS.

5 PROVIDE 1" EMPTY CONDUIT WITH GROUND BUSHINGS AND PULL CORD FROM THE ERMS PANEL TO THE ELECTRONIC EQUIPMENT ROOM TELCO BACKBOARD DEMARCATION POINT. COORDINATE AND FIELD VERIFY THE TERMINATION POINT LOCATION WITH THE COR.

6 PROVIDE 1" EMPTY CONDUIT WITH PULL CORD AND GROUND BUSHINGS IN THE BOTTOM OF THE ERMS J-BOX FOR CABLING CONNECTIONS TO THE ERMS PANEL.

7 PROVIDE 3/4" EMPTY CONDUIT WITH PULL CORD AND GROUND BUSHINGS AT J-BOX TERMINATION POINTS.

8 PROVIDE 3/4" CONDUIT, (2) #12AWG CONTROL INTERFACE CABLE SET FOR FUEL TANK FILL PORT SENSOR CIRCUITS. PROVIDE INTERFACE CABLE SET IN ACCORDANCE WITH THE MONITORING PANEL AND TANK MANUFACTURER'S INSTALLATION REQUIREMENTS.

9 PROVIDE NEMA 4X, NEC RATED CLASS 1, DIVISION 2, GROUP D RATED JUNCTION BOX. LOCATE JUNCTION BOX AT 24" AFF IN E/G ROOM FOR CONDUIT TRANSITION POINT TO RIGID STEEL CONDUIT (RGS) PATHWAY EXTENSION TO THE EXTERIOR FUEL STORAGE TANK.

10 PROVIDE 1" RGS CONDUIT WITH (4) #12AWG CONTROL INTERFACE WIRING IN CONDUIT IN ACCORDANCE WITH EQUIPMENT MANUFACTURER'S INSTALLATION REQUIREMENTS. INSTALL CONDUIT RACEWAY AND CIRCUIT WIRING IN ACCORDANCE WITH NEC CLASS 1, DIVISION-2 GROUP D REQUIREMENTS.

11 FUEL STORAGE TANK NEMA-7, NEC RATED CLASS 1, DIVISION 2, GROUP D, FILL PORT ENCLOSURE FOR CONTROL SIGNAL WIRING INTERFACE TERMINATIONS. COORDINATE INTERFACE WIRING AND TERMINATIONS WITH THE FUEL TANK MANUFACTURER'S INSTALLATION REQUIREMENTS.

12 PROVIDE A MIN. 6" W x 6"L x 4"D NEMA-1, JUNCTION BOX.

13 PROVIDE A CATEGORY 6 DATA CABLE IN 3/4" CONDUIT FROM THE ERMS V4 PANEL FOR E/G AND ATS REMOTE MONITORING INTERFACE WIRING. ALLOW AT LEAST 3FT SLACK CABLE AT EACH END FOR CABLE TERMINATIONS. FIELD COORDINATE THE CABLING INSTALLATION AND ERMS V4 SYSTEM REQUIREMENTS WITH THE COR. PROVIDE CABLE MANAGEMENT AND LABEL TAGS AT EACH END IDENTIFYING FROM-TO INFORMATION FOR CIRCUIT MONITORING POINTS. OBTAIN COR APPROVAL FOR INSTALLATION METHODS AND EQUIPMENT/CABLING IDENTIFICATION FORMAT PRIOR TO INSTALLATION.

14 ERMS V4 PANEL IS GOVERNMENT FURNISHED, CONTRACTOR INSTALLED EQUIPMENT. COORDINATE WITH COR TO REQUEST GFE SHIPMENT FROM AJW-222 ERMS PROGRAM OFFICE (POINT OF CONTACT: JOSEPH.VINCENT@FAA.GOV, PROGRAM MANAGER). AJW-222 ERMS PROGRAM OFFICE TECHNICIANS WILL DEPLOY FOR PANEL OPTIMIZATION ONCE INSTALLATION IS COMPLETE. REFER TO DRAWING E401 FOR LOCATION ERMS PANEL LOCATION.

FOR OFFICIAL USE ONLY
PUBLIC AVAILABILITY TO BE DETERMINED UNDER 5 USC 552

A8 / E806 **ELECTRICAL ERMS CONNECTION DIAGRAM**
NTS

COMMONWEALTH OF VIRGINIA
MATHIAS M. BECKER
LIC. NO. 029564
9/12/2025
PROFESSIONAL ENGINEER

JACOBS
1100 N GLEBE RD.
SUITE 500
ARLINGTON, VA 22201

REV.	APPROVED DATE	DESCRIPTION	JCN	REDLINE DATE	APVD

Jacobs

DEPARTMENT OF TRANSPORTATION
FEDERAL AVIATION ADMINISTRATION
CENTRAL SERVICE REGION — FT WORTH, TX

LEEVILLE (LEV) VORTAC REPLACEMENT

ELECTRICAL ERMS CONNECTION DIAGRAM

GRAND ISLE — LEEVILLE (LEV) VORTAC — LA

LEEVILLE VORTAC
GRAND ISLE LOUISIANA

REVIEWED BY	SUBMITTED BY	APPROVED BY
	SUBMITTER'S TITLE	APPROVER'S TITLE

DESIGNED BY: M. BECKER
DRAWN BY: M. BECKER
CHECKED BY: E. ZIMMERMAN
ISSUED BY: ENGINEERING SERVICES TERMINAL
DATE: 9/12/2025 — JCN: 1508914
DRAWING NO.: LEV - D - VORTAC - E806 — REV.

PLOT DATE/TIME: 9/10/2025 4:02:01 PM