LAKE MEAD NATIONAL RECREATION AREA

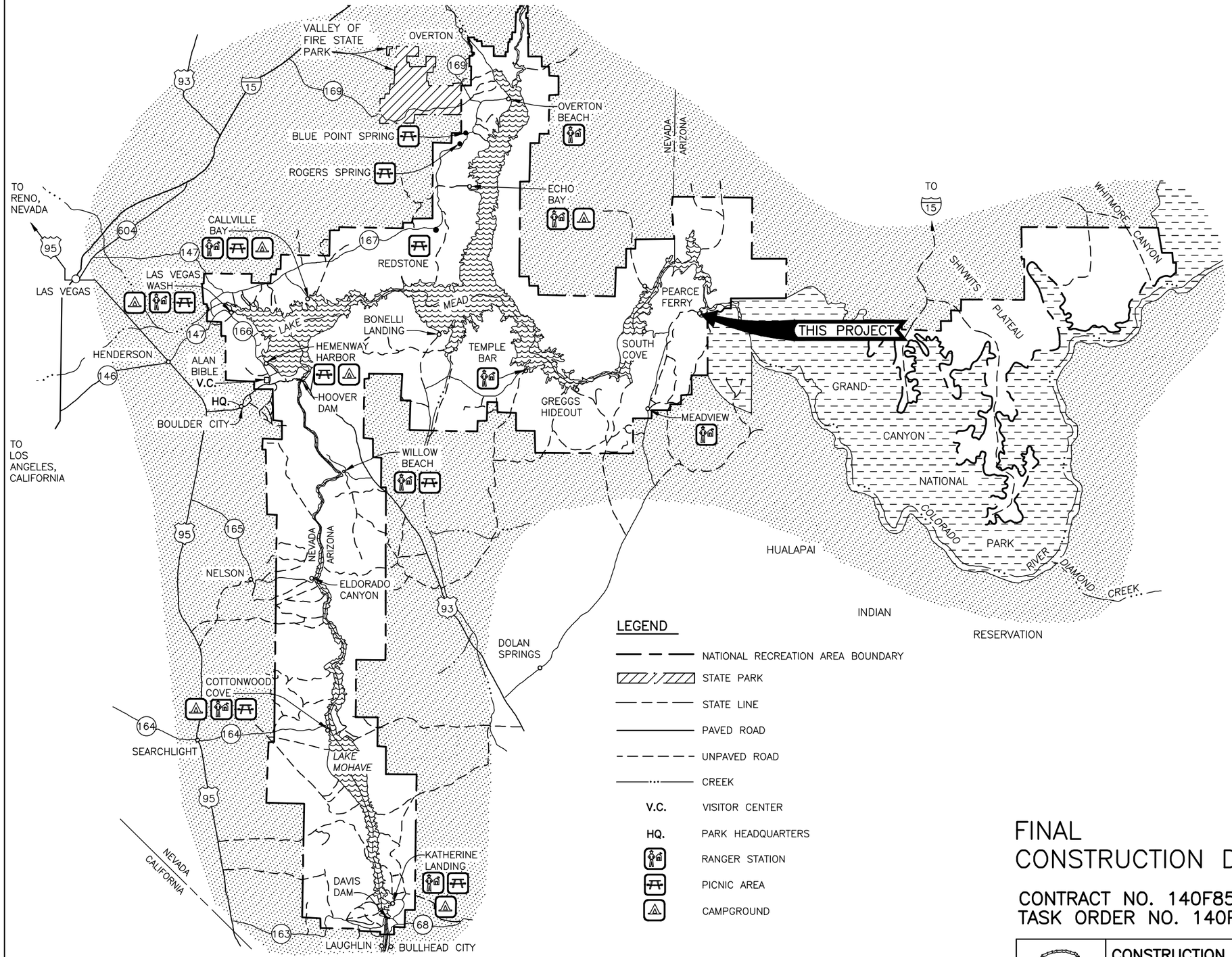

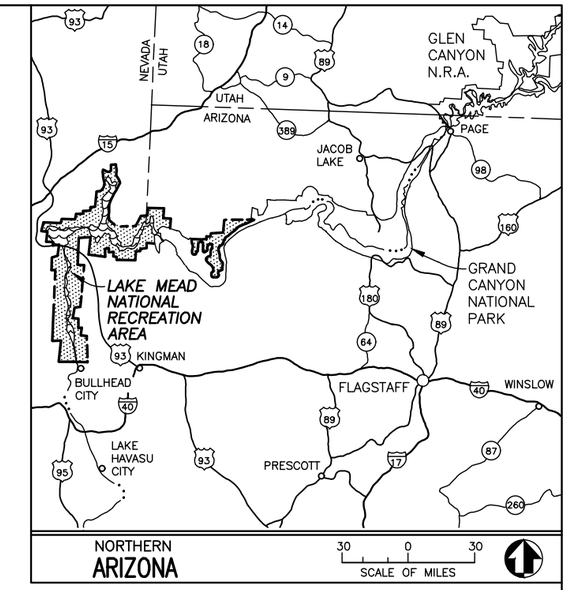

LEGEND

- NATIONAL RECREATION AREA BOUNDARY
- STATE PARK
- STATE LINE
- PAVED ROAD
- UNPAVED ROAD
- CREEK
- V.C. VISITOR CENTER
- HQ. PARK HEADQUARTERS
- RANGER STATION
- PICNIC AREA
- CAMPGROUND

Registered Professional Engineer (Civil)
CERTIFICATE NO. 70179
BRANDON M. THEIS
Date Signed 8-17-23
ARIZONA U.S.A.

FINAL
CONSTRUCTION DRAWINGS

REVISION DATE 8/17/23

CONTRACT NO. 140F8519D0005
TASK ORDER NO. 140P8522F0057

SCALE OF MILES: 5 0 5 10
SCALE OF KILOMETERS: 5 0 5 10 15

	CONSTRUCTION DRAWINGS UNITED STATES DEPARTMENT OF THE INTERIOR NATIONAL PARK SERVICE DENVER SERVICE CENTER	TITLE OF PROJECT NEW LAUNCH RAMP LOCATION WITHIN PARK PEARCE FERRY NAME OF PARK LAKE MEAD NATIONAL RECREATION AREA REGION: PACIFIC WEST · COUNTY: MOHAVE · STATE: ARIZONA	DRAWING NO. 602 186520 PMIS/PKG NO. 238897 SHEET 1 OF 14

VICINITY MAP

SHEET INDEX		
SHEET	SUBSHEET	TITLE OF SHEET
1		COVER
2	G1	SHEET INDEX AND VICINITY MAP
3	G2	ABBREVIATIONS AND GENERAL NOTES
4	G3	TYPICAL SECTIONS
5	G4	TYPICAL DETAILS
6	G5	TYPICAL DETAILS
7	C1	PROJECT OVERVIEW AND SITE SURVEY
8	C2	TRAFFIC CONTROL PLAN
9	C3	EROSION CONTROL PLAN
10	C4	EROSION CONTROL DETAILS
11	C5	DEMOLITION PLAN
12	C6	PLAN AND PROFILE
13	C7	SITE GRADING PLAN
14	C8	DRAINAGE DETAILS

DESIGNED: T. WOODS	SUB SHEET NO.	TITLE OF SHEET	DRAWING NO. 602 186520
CADD M. ROGERS	G1	SHEET INDEX AND VICINITY MAP LAKE MEAD NATIONAL RECREATION AREA	PMIS/PKG NO. 238897
TECH. REVIEW: B. THEIS			SHEET 2 OF 14
DATE: 8/17/23			

CIVIL ABBREVIATIONS

@	AT
℄	CENTERLINE
°	DEGREES
Δ	DELTA (ANGLE)
ø	DIAMETER
'	FOOT, FEET
"	INCH, INCHES
–	MINUS
#	NUMBER
%	PERCENT
+	PLUS
ACM	AERIAL CONTROL MONUMENT
AD	ALGEBRAIC DIFFERENCE
ALIGN	ALIGNMENT
ALUM	ALUMINUM
APPROX	APPROXIMATELY
ASTM	AMERICAN SOCIETY FOR TESTING AND MATERIALS
BFC	BOTTOM FACE OF CURB
BVCE	BEGINNING OF VERTICAL CURVATURE ELEVATION
BVCS	BEGINNING OF VERTICAL CURVATURE STATION
C	CENTER
CIP	CAST IN PLACE
CL	CLASS
CLR	CLEAR
CMP	CORRUGATED METAL PIPE
COMP	COMPACTION
CONC	CONCRETE
CONST	CONSTRUCT, CONSTRUCTION
CONT	CONTINUOUS
CY	CUBIC YARD, CUBIC YARDS
DESCR	DESCRIPTION
DIA	DIAMETER
DL	DITCH LINE
E	EAST, EASTING
EA	EACH
EL	ELEVATION
ELEC	ELECTRIC
ELEV	ELEVATION
EMB	EMBANKMENT
EQ	EQUAL
EVCE	END OF VERTICAL CURVATURE ELEVATION
EVCS	END OF VERTICAL CURVATURE STATION
EXC	EXCAVATION
EXP	EXPOSURE
FHWA	FEDERAL HIGHWAY ADMINISTRATION
FT	FOOT, FEET
GA	GAUGE
GB	GRADE BREAK
HORIZ	HORIZONTAL
L	LENGTH
LB	POUND
LF	LINEAR FOOT, LINEAR FEET
LT	LEFT
MAX	MAXIMUM
MFG	MANUFACTURER
MIN	MINIMUM
MON	MONUMENT
N	NORTH, NORTHING
NEMA	NATIONAL ELECTRICAL MANUFACTURERS ASSOCIATION
NO	NUMBER
NPS	NATIONAL PARK SERVICE
NTS	NOT TO SCALE
OC	ON CENTER
PC	POINT OF CURVATURE
PG	PROFILE GRADE
PI	POINT OF INTERSECTION
PL	PLACES
PRC	POINT OF REVERSE CURVATURE
PSI	POUNDS PER SQUARE INCH
PT	POINT, POINT OF TANGENCY
PVI	POINT OF VERTICAL INTERSECTION
R	RADIUS
REINF	REINFORCEMENT
RT	RIGHT
S	SOUTH
SCH	SCHEDULE
SF	SQUARE FOOT, SQUARE FEET
SHT	SHEET
SL	SLOPE
SP	SPACES
STA	STATION
T	TANGENT LENGTH
TEMP	TEMPORARY
TFC	TOP FACE OF CURVE
TYP	TYPICAL
UNO	UNLESS NOTED OTHERWISE
USFT	US FOOT, US FEET
VC	VERTICAL CURVE
VERT	VERTICAL
W	WEST

GENERAL NOTES

1. THESE PLANS REPRESENT A DESIGN FOR MAINTENANCE OF PEARCE FERRY ROADWAY AND LAUNCH RAMP PROJECT – PMIS #238897.
2. THE CONTRACTOR SHALL REMOVE AND REUSE 66 EXISTING PRECAST PANELS, WHICH ARE LOCATED AT THE EXISTING LAUNCH RAMP.
3. THE CONTRACTOR SHALL REMOVE THE EXISTING PIPE MAT, WHICH IS LOCATED AT THE EXISTING LAUNCH RAMP AND TRANSPORT AS DIRECTED BY THE CONTRACTING OFFICER.
4. SEE SECTION 01 11 00–SUMMARY OF WORK FOR SPECIFICATIONS AND LOCATION FOR PLACEMENT OF EXCESS EXCAVATION.
5. EXCAVATION QUANTITIES MAY BE GREATER THAN ESTIMATED NEAR EXISTING LAUNCH RAMP DUE TO HIGH FLOW EVENTS WHICH DEPOSIT SAND AND SILT.

Registered Professional Engineer (Civil)
CERTIFICATE NO. 70179
BRANDON M. THEIS
Date Signed 8-17-23
ARIZONA U.S.A.

NOTES:

1. THIS IS A STANDARD LIST OF ABBREVIATIONS. THEREFORE, SOME ABBREVIATIONS MAY APPEAR ON THIS SHEET AND MAY NOT BE UTILIZED ON THIS PROJECT.

DESIGNED: T. WOODS CADD M. ROGERS TECH. REVIEW: B. THEIS DATE: 8/17/23	SUB SHEET NO. G2	TITLE OF SHEET ABBREVIATIONS AND GENERAL NOTES LAKE MEAD NATIONAL RECREATION AREA	DRAWING NO. 602 186520 PMIS/PKG NO. 238897 SHEET 3 OF 14

NOTES:

1. VARIES FROM STA 10+50 TO 11+00, SEE SHEET C7
2. USE 4500 PSI MINIMUM COMPRESSION STRENGTH 28-DAY CONCRETE.
3. USE GRADE 60, EPOXY COATED REBAR SUPPORTED BY 3" TALL CHAIRS.
4. DEPRESS RIP RAP (CLASS 1) 4" AND COVER WITH 4" CRUSHED AGGREGATE BASE COURSE (1 ½" MINUS) IN AREAS SPECIFIED IN THE PLANS.
5. PLACE CRUSHED AGGREGATE BASE COURSE (1 ½" MINUS) IN A SINGLE LIFT.

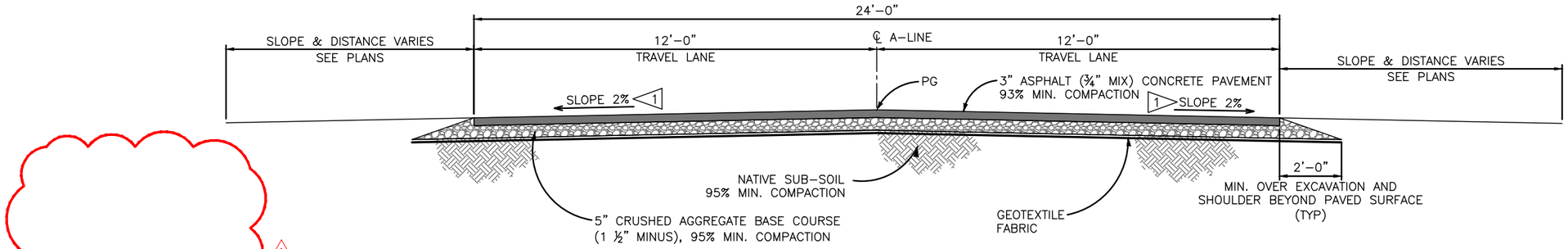

A / C6 PAVED LAUNCH RAMP ROAD
A-LINE

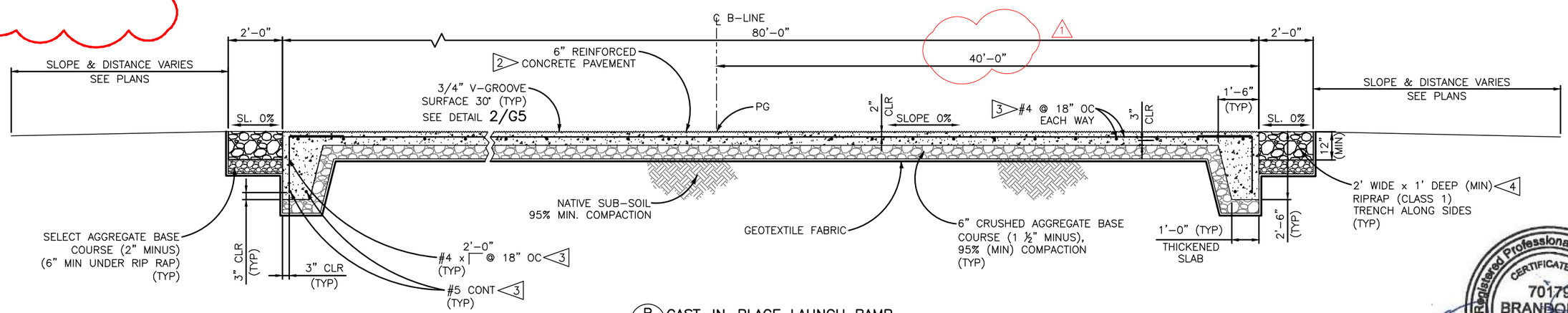

B / C6 CAST-IN-PLACE LAUNCH RAMP
NO SCALE

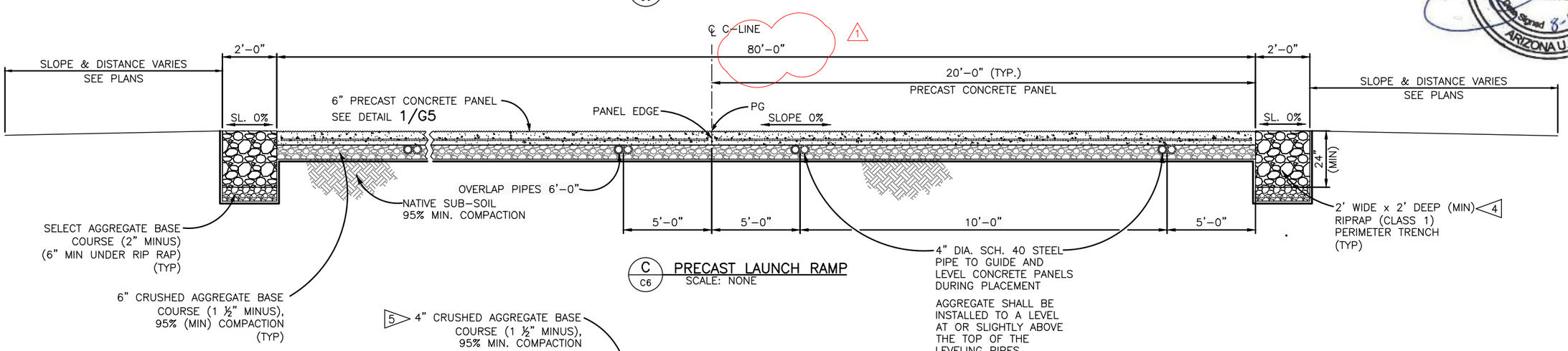

C / C6 PRECAST LAUNCH RAMP
SCALE: NONE

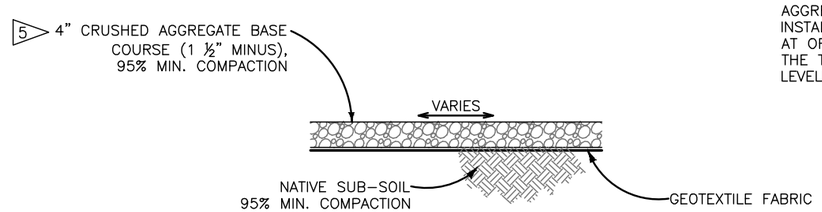

D / C7 GRAVEL AREAS
SCALE: NONE

REVISION	DATE
1 RAMP AND ASPHALT WIDTH REVISION	10/18/2024

DESIGNED: T. WOODS CADD M. ROGERS TECH. REVIEW: B. THEIS DATE: 8/17/23	SUB SHEET NO. G3	TITLE OF SHEET TYPICAL SECTIONS LAKE MEAD NATIONAL RECREATION AREA	DRAWING NO. 602 186520 PMIS/PKG NO. 238897 SHEET 4 OF 14

Registered Professional Engineer (Civil) CERTIFICATE NO. 70179 BRANDON M. THEIS Date Signed 8-17-23 ARIZONA U.S.A.

NOTES:

1 PROVIDE TWO CONNECTIONS PER PRECAST PANEL.

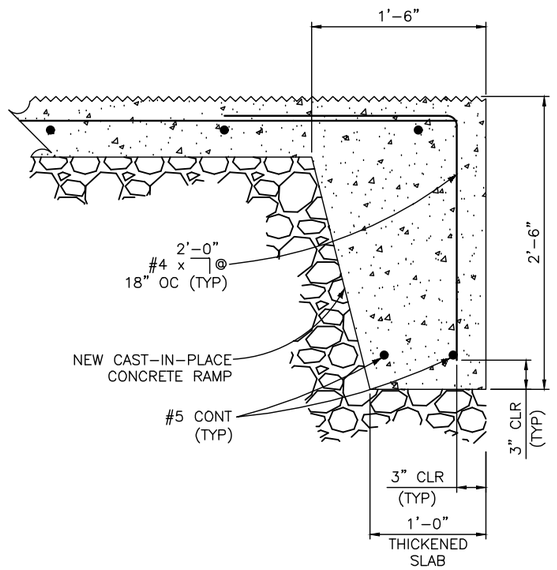

1 CAST-IN-PLACE LAUNCH RAMP END
NO SCALE

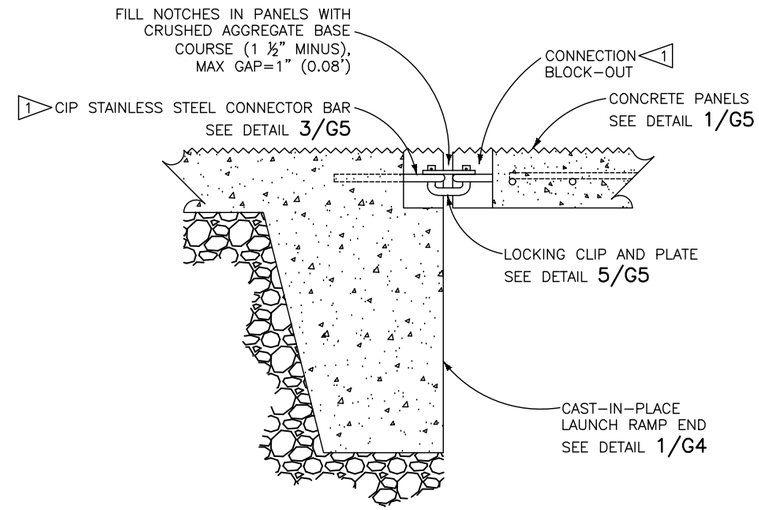

2 CAST-IN-PLACE TO PRECAST CONNECTION
NO SCALE

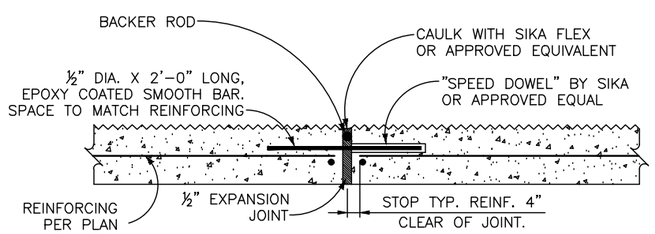

3 CONC. PAVEMENT CONSTRUCTION/EXPANSION JOINT DETAIL
NO SCALE

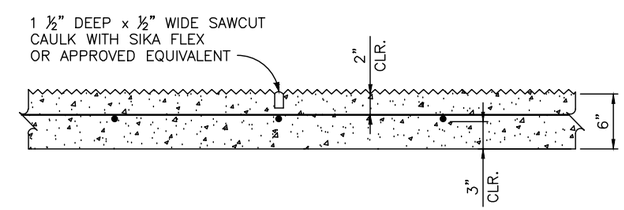

4 LONGITUDINAL AND TRANSVERSE CONTROL JOINT DETAIL
NO SCALE

Registered Professional Engineer (Civil)
CERTIFICATE NO. 70179
BRANDON M. THEIS
Date Signed 8-17-23
ARIZONA U.S.A.

DESIGNED: T. WOODS CADD M. ROGERS TECH. REVIEW: B. THEIS DATE: 8/17/23	SUB SHEET NO. G4	TITLE OF SHEET TYPICAL DETAILS LAKE MEAD NATIONAL RECREATION AREA	DRAWING NO. 602 186520 PMIS/PKG NO. 238897 SHEET 5 OF 14

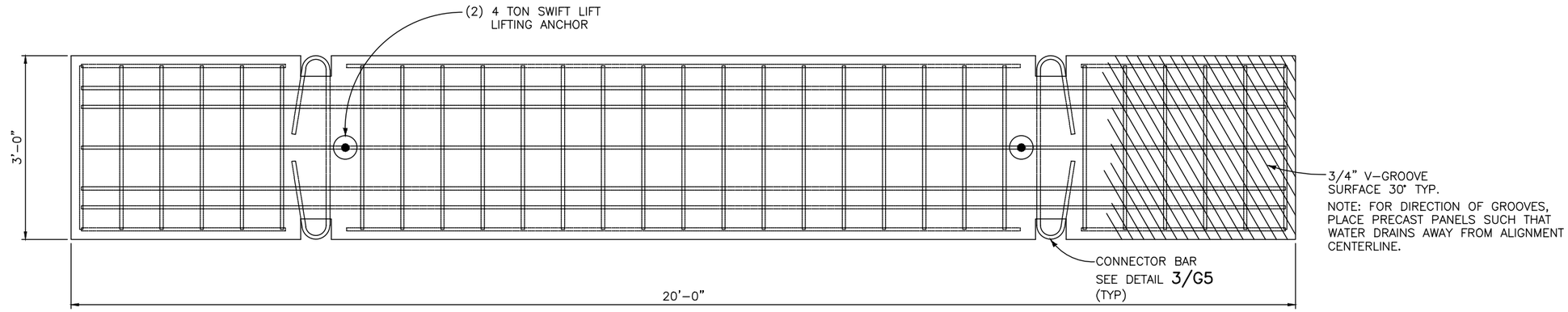

PLAN

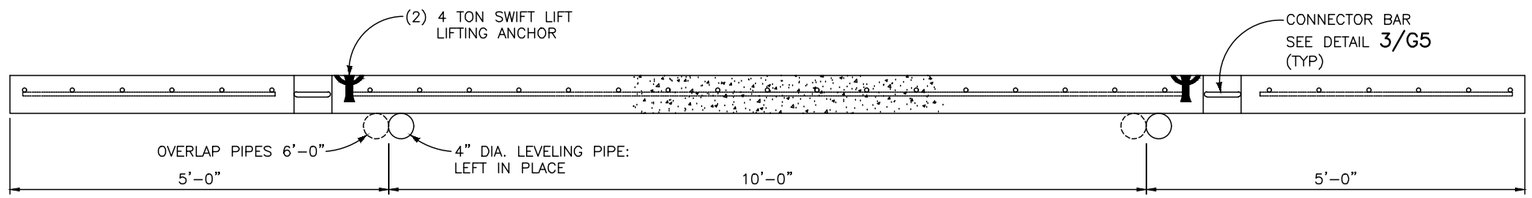

ELEVATION

1 CONCRETE PANELS
NO SCALE

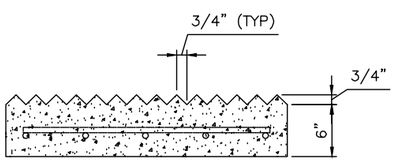

NOTE: FOR DIRECTION OF GROOVES, PLACE PRECAST PANELS SUCH THAT WATER DRAINS AWAY FROM ALIGNMENT CENTERLINE.

2 V-GROOVE FINISH DETAIL
NO SCALE

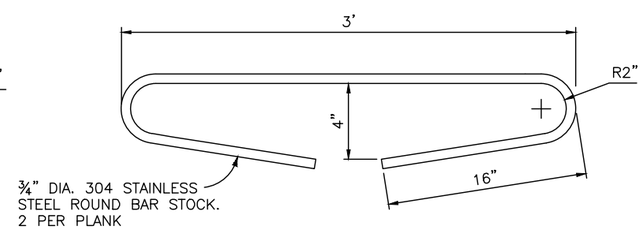

3 CONNECTOR BAR DETAIL
NO SCALE

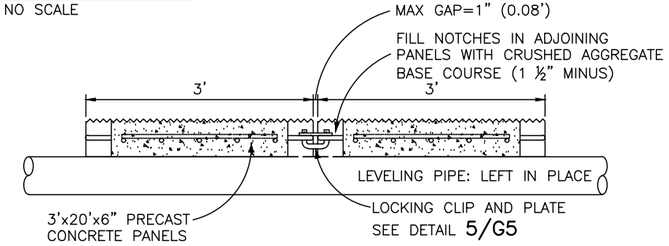

4 CONNECTION DETAIL
NO SCALE

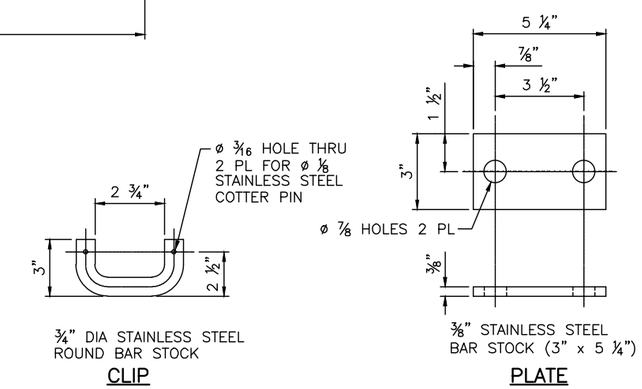

5 LOCKING CLIP AND PLATE DETAIL
NO SCALE

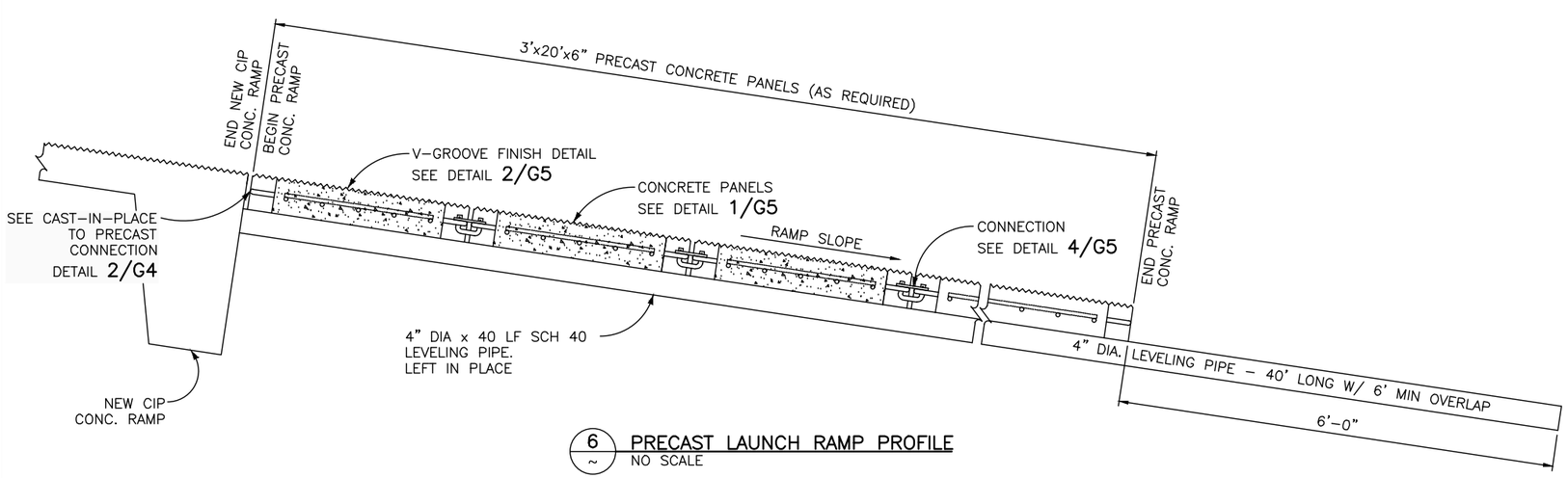

6 PRECAST LAUNCH RAMP PROFILE
NO SCALE

NOTES:

1. THIS DETAIL IS FOR NEW PRECAST CONCRETE PANELS AND MAY NOT MATCH EXISTING PRECAST PANELS FOUND AT THE SITE.

DESIGNED: T. WOODS CADD M. ROGERS TECH. REVIEW: B. THEIS DATE: 8/17/23	SUB SHEET NO. G5	TITLE OF SHEET TYPICAL DETAILS LAKE MEAD NATIONAL RECREATION AREA	DRAWING NO. 602 186520 PMIS/PKG NO. 238897 SHEET 6 OF 14

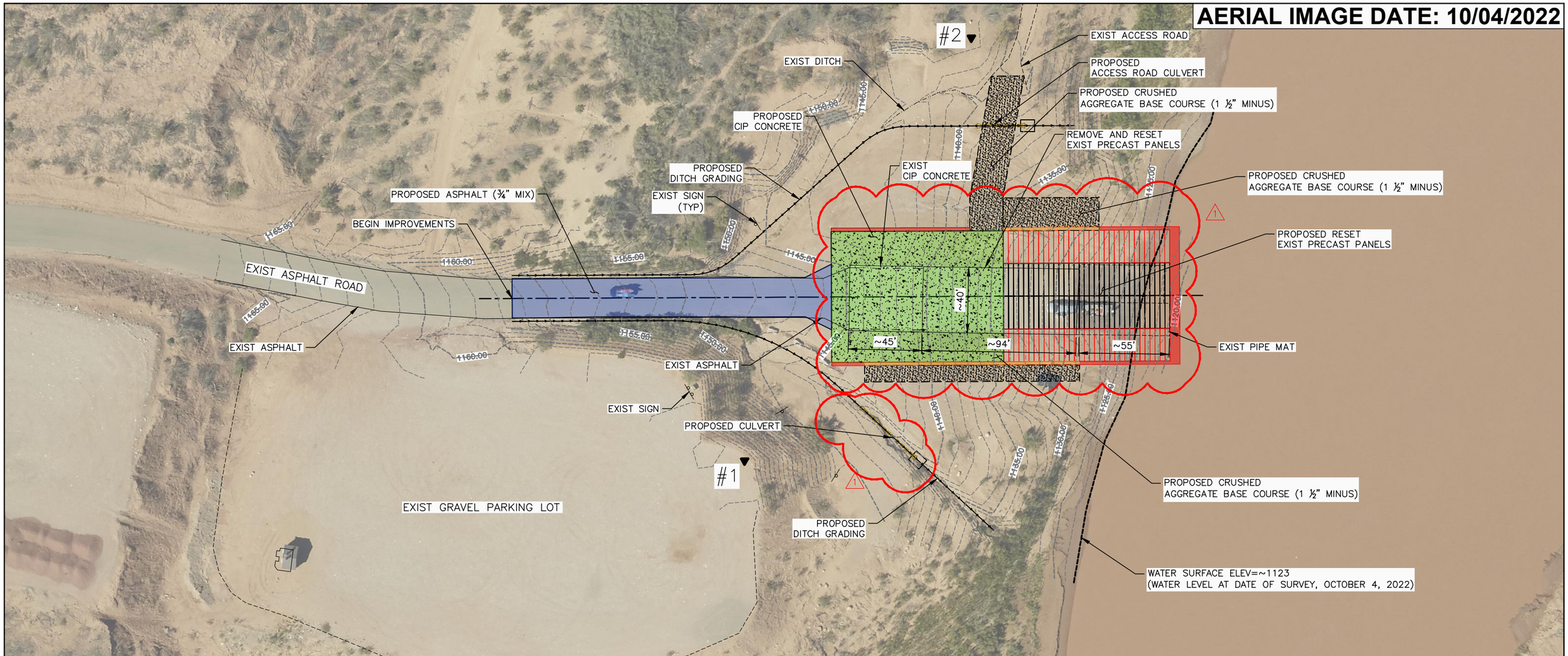

NPS Pearce Ferry 2022 RPA Final Control Point Table				
Arizona West State Plane Coordinates (0203) NAD83(CORS96)(EPOCH 2002) International Foot Definition NAVD 88 Elevations				
Point	Northing	Easting	Elevation	Description
1	1864974.488	631393.567	1163.96	Set RPA RPC on upper parking lot top bank overlooking ramp, 102 feet from SE corner ramp, 54 feet E of Pearce Ferry Info sign
2	1865223.491	631239.166	1143.60	Set RPA RPC 157 feet NW of SW corner ramp, 30 feet SW of unimproved road, 150 feet SW of edge water of river (today)

Metadata

Survey Performed by Robert Peccia and Associates – October 2022 Trimble R8-4/R12i GPS
Control primarily established with GPS RTK methods:
Held CP 1 OPUS results NEZ Lat Long Height
Arizona West State Plane Coordinates (0203) NAD83(2011)(EPOCH 2010.000) International Foot Definition NAVD 88 Elevations as derived from OPUS
NAVD 88 Elevations of mapping were computed using Geoid18
Magnetic Declination:
RPA RPC – Set 5/8"x24" long rebar with 1 1/4" Red Plastic Cap marked "RPA CONTROL"
OPUS – Online Position User Service
RPC – Red Plastic Cap
YPC – Yellow Plastic Cap
NGS – National Geodetic Survey
CSF – Combined Scale Factor
OPUS point
CSF = 0.99988726

Registered Professional Engineer (Civil)
CERTIFICATE NO. 70179
BRANDON M. THEIS
Date Signed 8-17-23
ARIZONA U.S.A.

LEGEND

- PROPOSED ASPHALT (¾" MIX)
- PROPOSED CIP CONCRETE
- PROPOSED CRUSHED AGGREGATE BASE COURSE (1 ½" MINUS)
- PROPOSED RIPRAP (CLASS 1)
- PROPOSED 4" DEPRESSED RIPRAP (CLASS 1) –COVER WITH 4" CRUSHED AGGREGATE BASE COURSE (1 ½" MINUS)

30 0 30 60
SCALE OF FEET

REVISION	DATE
1 RAMP AND ASPHALT WIDTH REVISION	10/18/2024

DESIGNED: T.WOODS
CADD M.ROGERS
TECH. REVIEW: B.THEIS
DATE: 8/17/23

SUB SHEET NO. C1

TITLE OF SHEET
PROJECT OVERVIEW AND SITE SURVEY
LAKE MEAD NATIONAL RECREATION AREA

DRAWING NO. 602 186520
PKG. NO. 238897
SHEET 7 OF 14

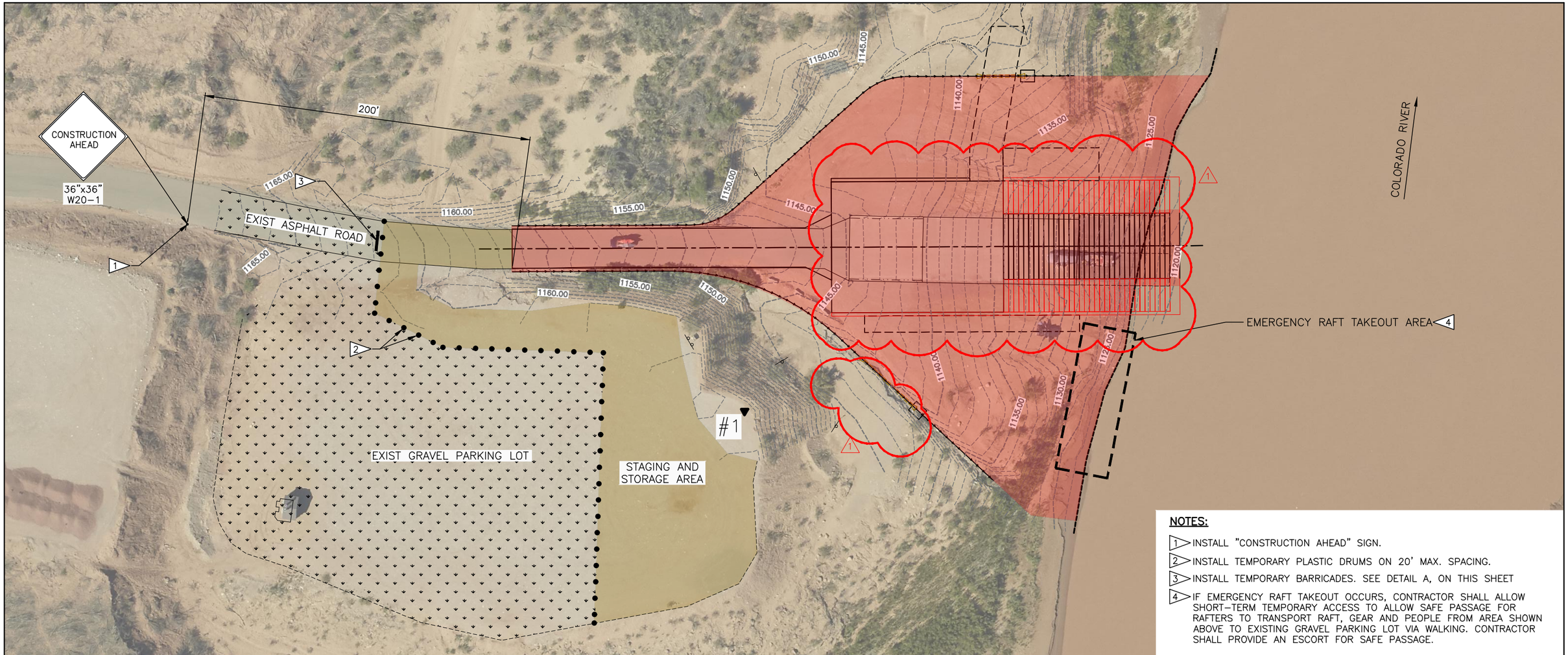

NOTES:

1. INSTALL "CONSTRUCTION AHEAD" SIGN.
2. INSTALL TEMPORARY PLASTIC DRUMS ON 20' MAX. SPACING.
3. INSTALL TEMPORARY BARRICADES. SEE DETAIL A, ON THIS SHEET
4. IF EMERGENCY RAFT TAKEOUT OCCURS, CONTRACTOR SHALL ALLOW SHORT-TERM TEMPORARY ACCESS TO ALLOW SAFE PASSAGE FOR RAFTERS TO TRANSPORT RAFT, GEAR AND PEOPLE FROM AREA SHOWN ABOVE TO EXISTING GRAVEL PARKING LOT VIA WALKING. CONTRACTOR SHALL PROVIDE AN ESCORT FOR SAFE PASSAGE.

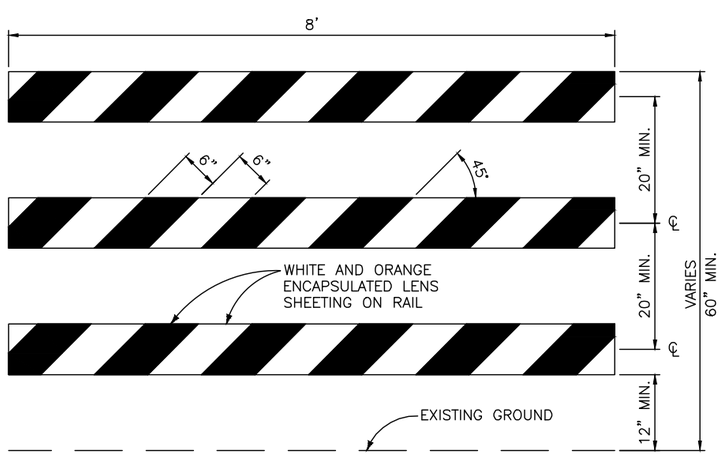

A / C2 TEMPORARY BARRICADE DETAIL
NO SCALE

NOTES:

1. ALL NON-REFLECTORIZED SURFACES SHALL BE WHITE.
2. SANDBAGS (APPROX. 25LB SACK FILLED WITH SAND) SHALL BE PLACED ON LOWER FRAME TO PROVIDE ADDITIONAL BALLAST.
3. RAILS MUST BE 8" MIN. TO 12" MAX. IN HEIGHT.

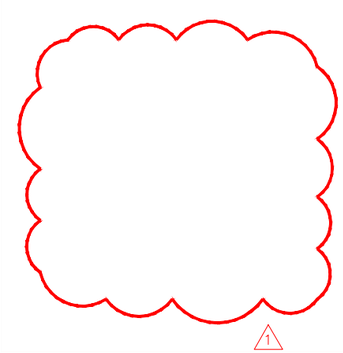

REVISION	DATE
1 RAMP AND ASPHALT WIDTH REVISION	10/18/2024

LEGEND

- UNDER CONSTRUCTION
- WORK AREA STAGING AND ACCESS
- UNDER TRAFFIC

30 0 30 60
SCALE OF FEET

DESIGNED: T.WOODS	SUB SHEET NO.	TITLE OF SHEET	DRAWING NO. 602 186520
CADD M.ROGERS	C2	TRAFFIC CONTROL PLAN	PKG. NO. 238897
TECH. REVIEW: B.THEIS		LAKE MEAD NATIONAL RECREATION AREA	SHEET 8 OF 14
DATE: 8/17/23			

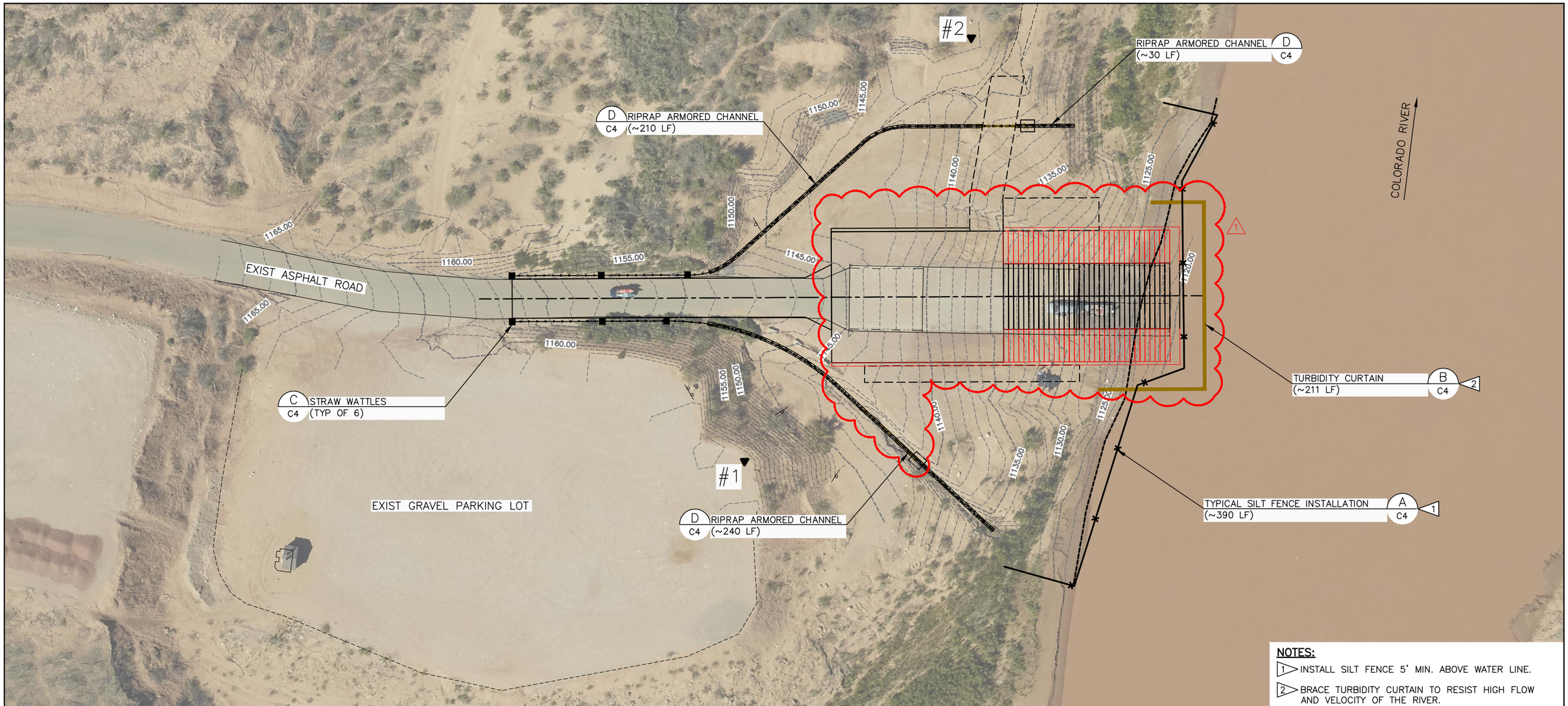

NOTES:

1. INSTALL SILT FENCE 5' MIN. ABOVE WATER LINE.
2. BRACE TURBIDITY CURTAIN TO RESIST HIGH FLOW AND VELOCITY OF THE RIVER.

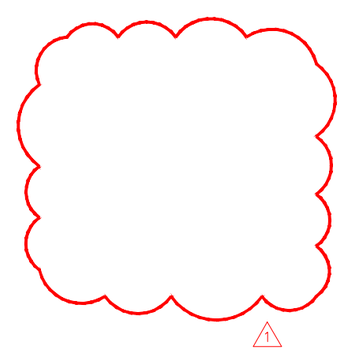

Registered Professional Engineer (Civil)
CERTIFICATE NO. 70179
BRANDON M. THEIS
Date Signed 8-17-23
ARIZONA U.S.A.

LEGEND

- SILT FENCE
- TURBIDITY CURTAIN

30 0 30 60
SCALE OF FEET

REVISION	DATE
1 RAMP AND ASPHALT WIDTH REVISION	10/18/2024

DESIGNED: T.WOODS	SUB SHEET NO.	TITLE OF SHEET	DRAWING NO. 602 186520
CADD M.ROGERS	C3	EROSION CONTROL PLAN	PKG. NO. 238897
TECH. REVIEW: B.THEIS		LAKE MEAD NATIONAL RECREATION AREA	SHEET 9 OF 14
DATE: 8/17/23			

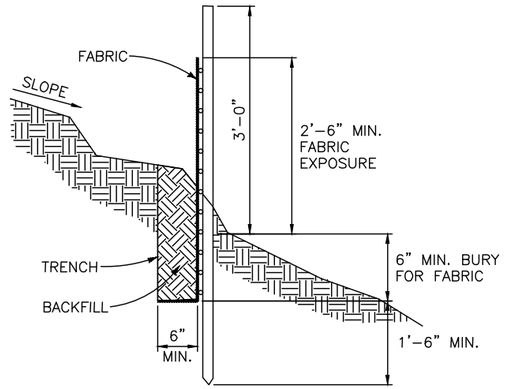

SECTION A–A'

NOTES:

1. INSTALLATION SHALL FOLLOW THE MANUFACTURER'S RECOMMENDATIONS.
2. POSTS SHALL BE INSTALLED SO THAT A MIN. OF 3'–0" EXTENDS ABOVE THE GROUND WITH A MIN. OF 2'–0" EMBEDMENT.
3. SPLICE JOINTS AT SUPPORT POSTS ONLY, WITH A MIN. 6" OVERLAP.

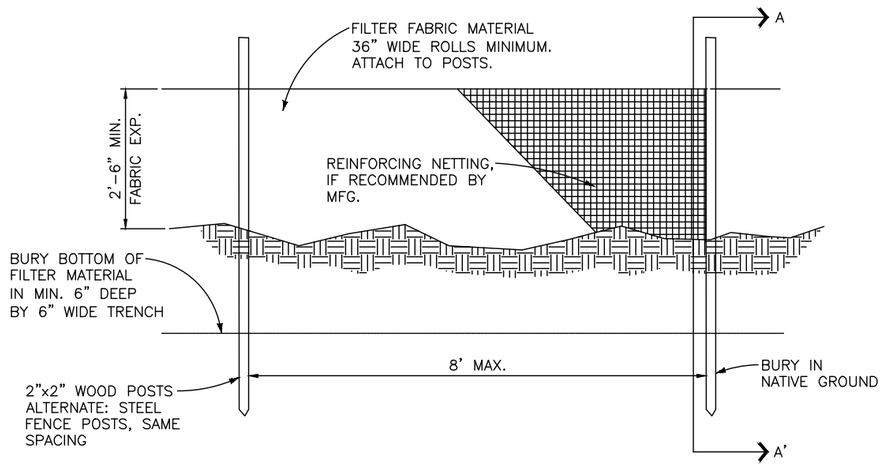

A / C4 TYPICAL SILT FENCE INSTALLATION
NO SCALE

NOTES:

1. THIS IS A SAMPLE DESIGN ONLY, REPRESENTING A MINIMUM LEVEL OF EFFORT. ACTUAL DESIGN SHALL BE RESPONSIBILITY OF CONTRACTOR.

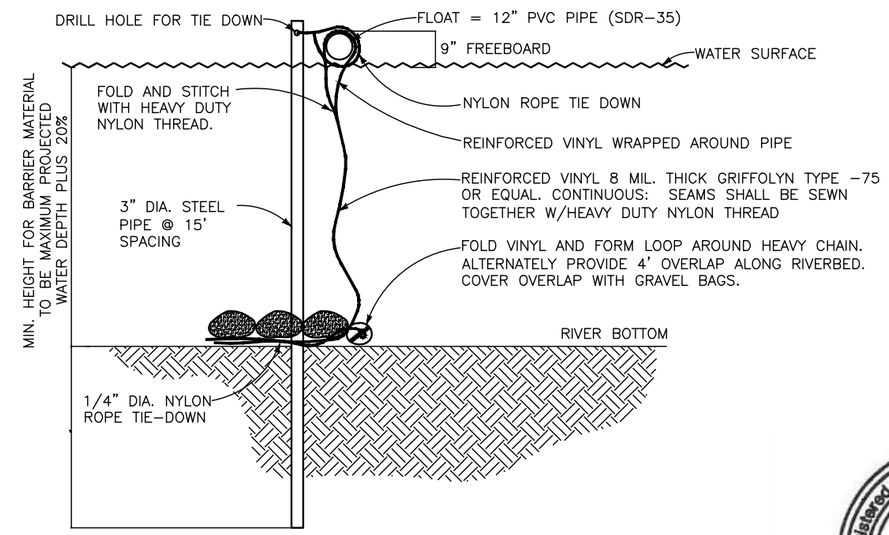

SECTION

B / C4 TURBIDITY CURTAIN
NO SCALE

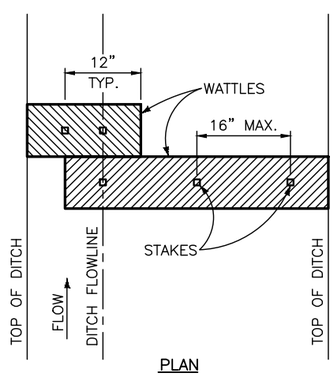

PLAN

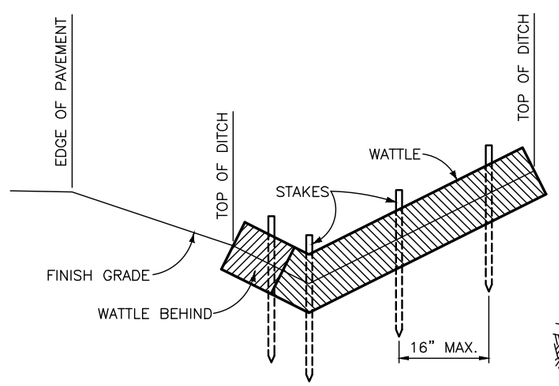

SECTION

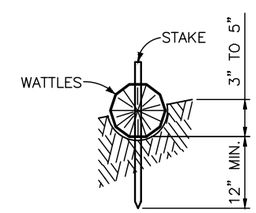

STAKING DETAIL

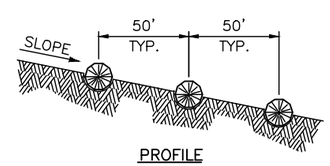

PROFILE

C / C4 STRAW WATTLES
NO SCALE

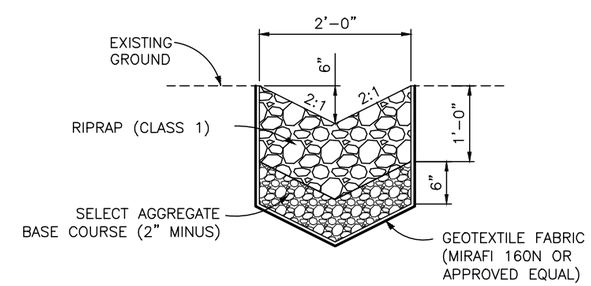

D / C4 RIPRAP ARMORED CHANNEL
NO SCALE

DESIGNED: T. WOODS CADD M. ROGERS TECH. REVIEW: B. THEIS DATE: 8/17/23	SUB SHEET NO. C4	TITLE OF SHEET EROSION CONTROL DETAILS LAKE MEAD NATIONAL RECREATION AREA	DRAWING NO. 602 186520 PMIS/PKG NO. 238897 SHEET 10 OF 14

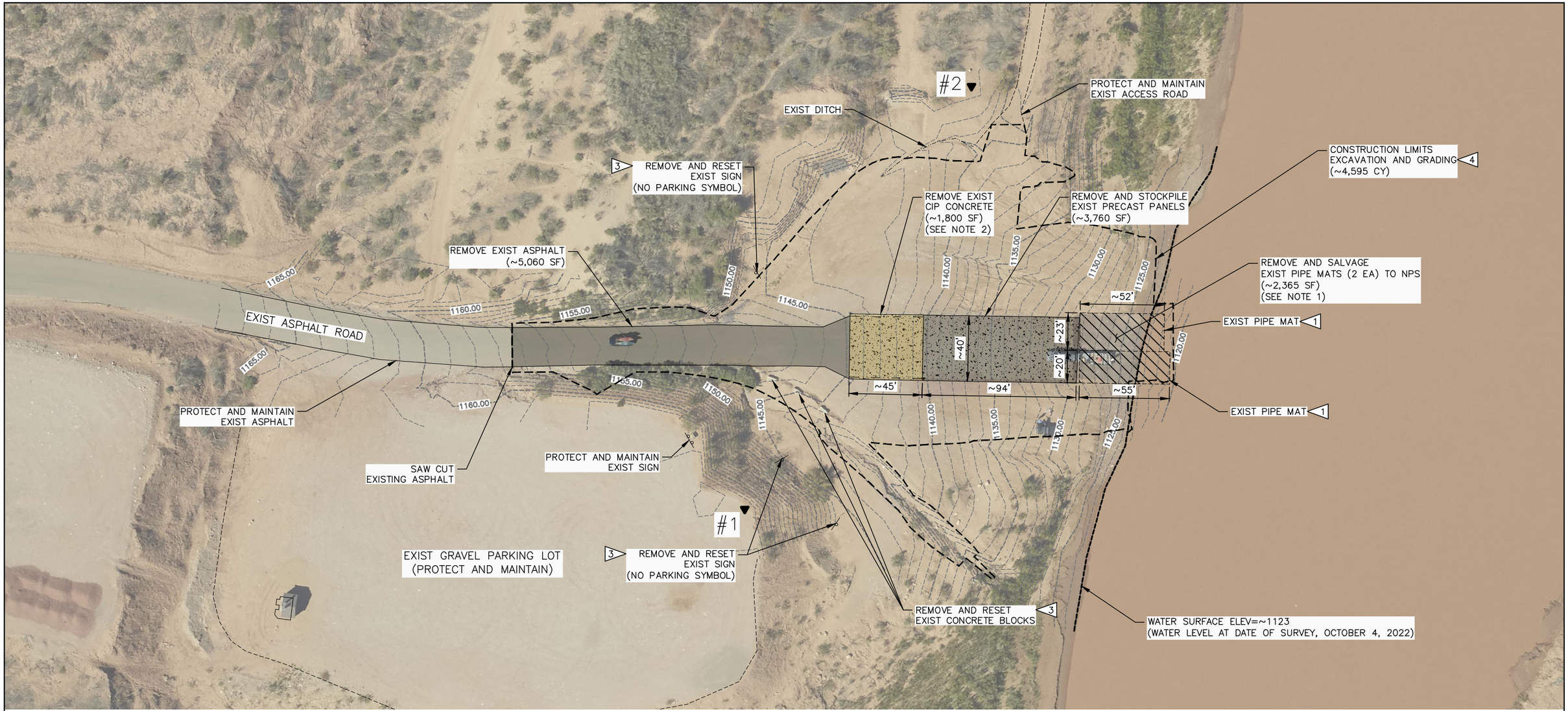

NOTES:

1. REMOVE AND SALVAGE EXISTING PIPE MATS TO NPS. DELIVER TO LOCATION AS DIRECTED BY THE COR.
2. EXISTING CIP CONCRETE HAS INTEGRAL CURB AND GUTTER.
3. SEE SHEET C7 FOR NEW LOCATION.
4. SEE SECTION 01 11 00 – SUMMARY OF WORK FOR SPECIFICATION AND LOCATION FOR PLACEMENT OF EXCESS EXCAVATION.

Registered Professional Engineer (Civil)
CERTIFICATE NO. 70179
BRANDON M. THEIS
Date Signed 8-17-23
ARIZONA U.S.A.

30 0 30 60
SCALE OF FEET

DESIGNED: T.WOODS	SUB SHEET NO.	TITLE OF SHEET	DRAWING NO. 602 186520
CADD M.ROGERS	C5	DEMOLITION PLAN	PKG. NO. 238897
TECH. REVIEW: B.THEIS		LAKE MEAD NATIONAL RECREATION AREA	SHEET 11 OF 14
DATE: 8/17/23			

Registered Professional Engineer (Civil)
CERTIFICATE NO. 70179
BRANDON M. THEIS
Date Signed 8-17-23
ARIZONA U.S.A.

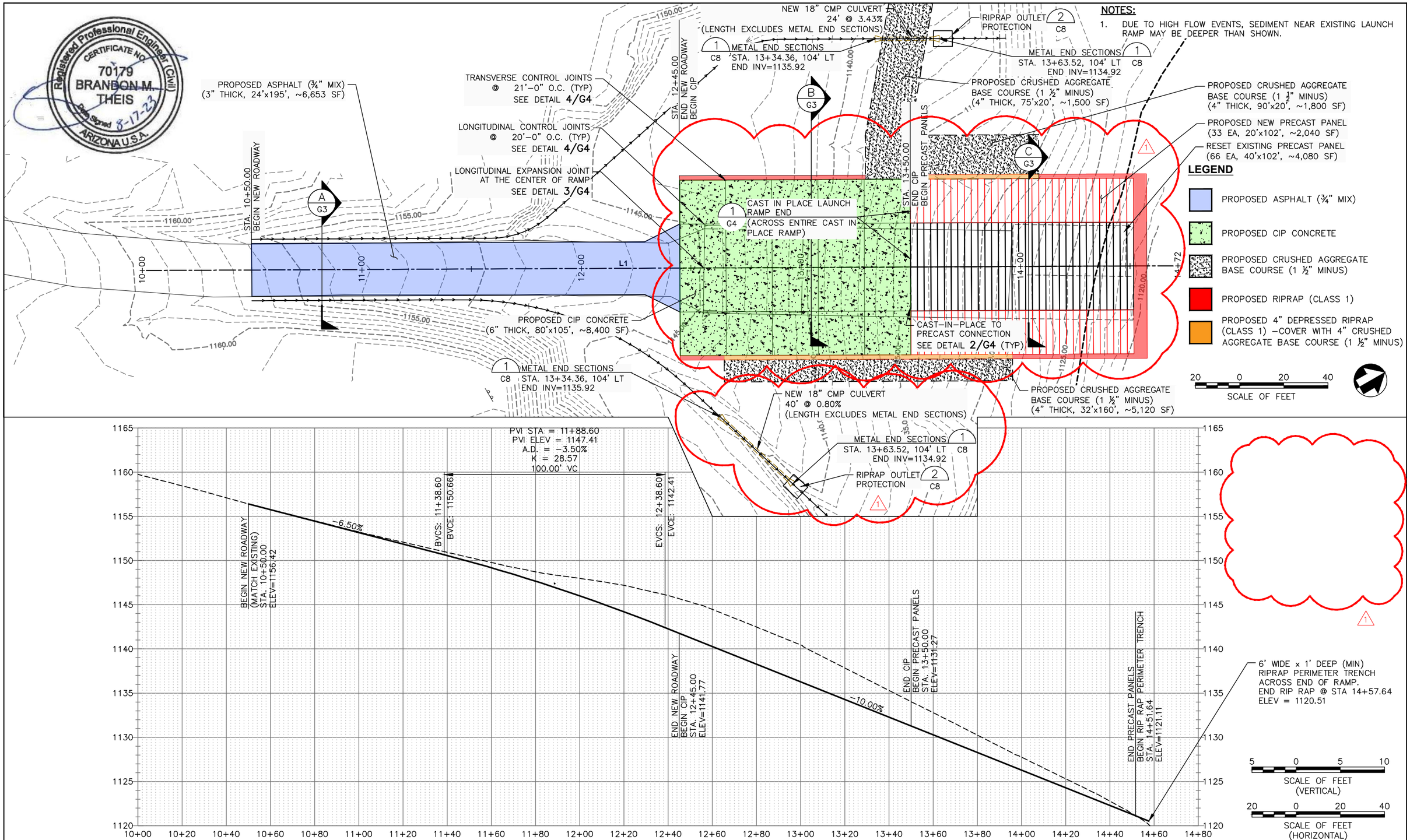

NOTES:

1. DUE TO HIGH FLOW EVENTS, SEDIMENT NEAR EXISTING LAUNCH RAMP MAY BE DEEPER THAN SHOWN.

LEGEND

- PROPOSED ASPHALT (¾" MIX)
- PROPOSED CIP CONCRETE
- PROPOSED CRUSHED AGGREGATE BASE COURSE (1 ½" MINUS)
- PROPOSED RIPRAP (CLASS 1)
- PROPOSED 4" DEPRESSED RIPRAP (CLASS 1) –COVER WITH 4" CRUSHED AGGREGATE BASE COURSE (1 ½" MINUS)

PAVED LAUNCH RAMP ROAD, CAST-IN-PLACE LAUNCH RAMP, AND PRECAST LAUNCH RAMP CENTERLINE COORDINATE TABLE

SEGMENT	START STATION	START NORTHING	START EASTING	END STATION	END NORTHING	END EASTING	RADIUS	LENGTH	DELTA	LINE/CHORD DIRECTION	TANGENT
L1	10+00.00	1864857.66	631212.05	14+71.64	1865267.19	631445.99		471.64		N29° 44' 14.86"E	

REVISION	DATE
1 RAMP AND ASPHALT WIDTH REVISION	10/18/2024

DESIGNED: T.WOODS
CADD: M.ROGERS
TECH. REVIEW: B.THEIS
DATE: 8/17/23

SUB SHEET NO. C6

TITLE OF SHEET
PLAN AND PROFILE
LAKE MEAD NATIONAL RECREATION AREA

DRAWING NO. 602 186520
PKG. NO. 238897
SHEET 12 OF 14

Registered Professional Engineer (Civil)
CERTIFICATE NO. 70179
BRANDON M. THEIS
Date Signed 8-17-23
ARIZONA U.S.A.

NOTES:
1 GRADE BREAK IN DITCH LINE.

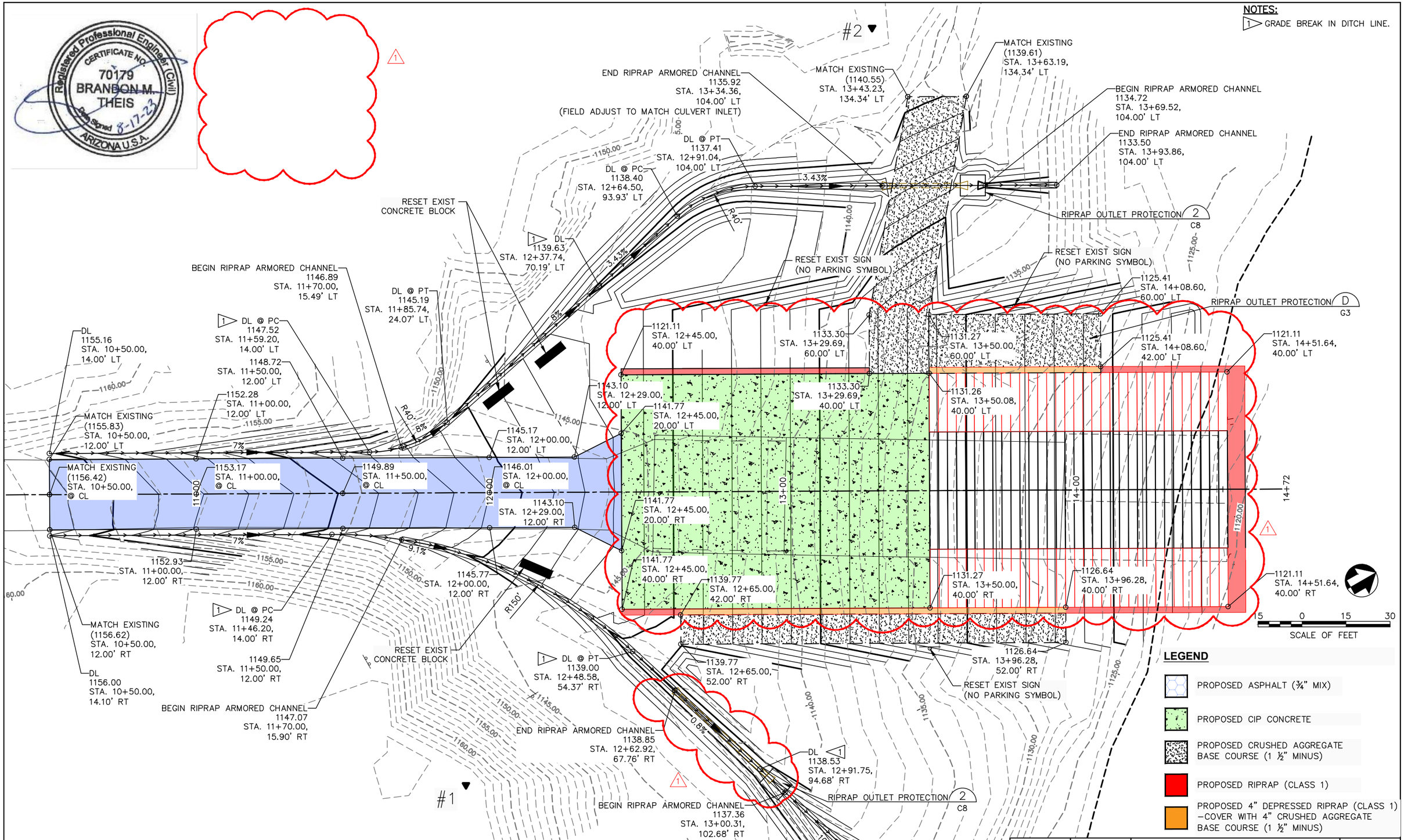

LEGEND

- PROPOSED ASPHALT (¾" MIX)
- PROPOSED CIP CONCRETE
- PROPOSED CRUSHED AGGREGATE BASE COURSE (1 ½" MINUS)
- PROPOSED RIPRAP (CLASS 1)
- PROPOSED 4" DEPRESSED RIPRAP (CLASS 1) –COVER WITH 4" CRUSHED AGGREGATE BASE COURSE (1 ½" MINUS)

REVISION	DATE
1 RAMP AND ASPHALT WIDTH REVISION	10/18/2024

DESIGNED:	SUB SHEET NO.	TITLE OF SHEET	DRAWING NO.
T.WOODS CADD M.ROGERS TECH. REVIEW: B.THEIS DATE: 8/17/23	C7	SITE GRADING PLAN LAKE MEAD NATIONAL RECREATION AREA	602 186520 PKG. NO. 238897 SHEET 13 OF 14

NOTES:

1. THE CULVERT LENGTHS SHOWN ON THE PLANS INCLUDE THE METAL END SECTIONS AS INDICATED ON THE DETAIL SHEET, INCLUDING CONNECTOR SECTION LENGTHS WHEN USED.
2. PIPE ON SKEW SHALL BE MITERED. SUFFICIENT ADDITIONAL LENGTH OF PIPE SHALL BE ALLOWED TO PROVIDE CLEARANCE FOR END SECTIONS.
3. TOE PLATES REQUIRED ON ROUND PIPE 24" AND OVER IN DIAMETER UNLESS OTHERWISE SPECIFIED ON THE PLANS OR IN THE SPECIFICATIONS.
4. TOE PLATES SHALL BE PUNCHED WITH 7/16" HOLES TO MATCH HOLES IN LIP OF END SECTION AND BOLTED WITH 3/8" GALVANIZED BOLTS.

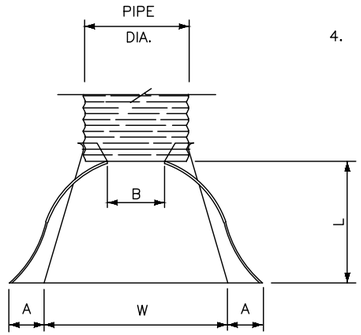

PLAN

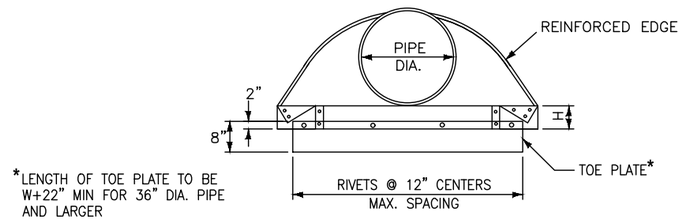

*LENGTH OF TOE PLATE TO BE W+22" MIN FOR 36" DIA. PIPE AND LARGER

ELEVATION

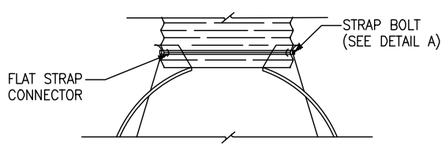

TYPE 1
For 12" Thru 24" CMP Only

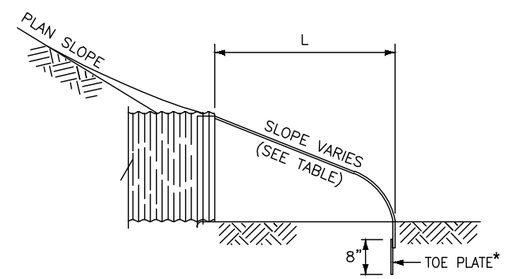

END SECTION
TYPE 1 CONNECTION

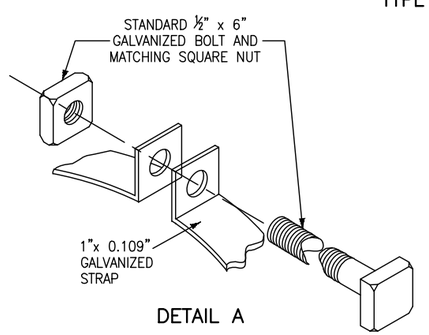

DETAIL A

TYPE CONNECTION	PIPE DIAM.	GAGE	DIMENSIONS					APPROX. SLOPE
			A 1" TOL.	B MAX.	H 1" TOL.	L 1 1/2" TOL.	W 2" TOL.	
TYPE 1	18"	16	8"	10"	6"	31"	36"	2½":1

1 ~ METAL END SECTIONS
NO SCALE

RIPRAP AND BEDDING CLASS	**Ⓐ	Ⓑ	Ⓒ
1	4D	12"	6"

** UNLESS OTHERWISE SHOWN ON PLANS

*SEE DIMENSIONS IN TABLE ON THIS SHEET.

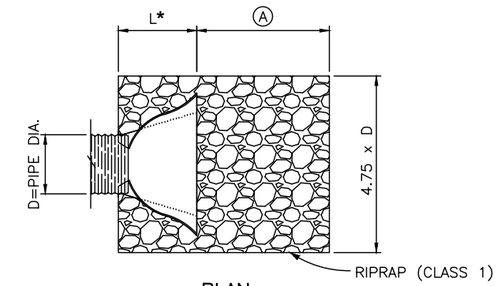

PLAN

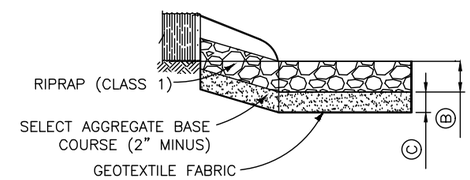

ELEVATION

2 ~ RIPRAP OUTLET PROTECTION
NO SCALE

DESIGNED: T. WOODS	SUB SHEET NO.	TITLE OF SHEET	DRAWING NO. 602 186520
CADD M. ROGERS	C8	DRAINAGE DETAILS	PMIS/PKG NO. 238897
TECH. REVIEW: B. THEIS		LAKE MEAD NATIONAL RECREATION AREA	SHEET 14 OF 14
DATE: 8/17/23			