P-1550 SOF MARINE RAIDER
BATTALION /COMPANY / TEAM FACILITIES

MARINE CORPS BASE CAMP LEJEUNE

FINAL SUBMITTAL
05/08/2026

NAVAL FACILITIES ENGINEERING SYSTEMS COMMAND
MID-ATLANTIC

DESIGN AND CONSTRUCTION
FACILITIES ENGINEERING AND ACQUISITION DIVISION
NORFOLK, VIRGINIA

MBF ARCHITECTS P.A. REGISTERED ARCHITECTURAL CORPORATION CERT. NO. 50679 NORTH CAROLINA NEW BERN NC

SYM	DESCRIPTION	DATE	APPR

NAVFAC

DARDEN J. EURE, III REGISTERED ARCHITECT 8640 NORTH CAROLINA NEW BERN NC
08 MAY 2026 SEAL

mbf architects pa
317-C Pollock Street | New Bern, NC 28560
252.637.6373 | mbfarchitects.com
A/E INFO

APPROVED
JOHN E. DUNHAM, R.A.
FOR COMMANDER NAVFAC 5/13/2026
ACTIVITY

SATISFACTORY TO

DES	REL	DRW	ESS	CHK	DJE,III

PM/DM	SGL/MDM
BRANCH MANAGER	DJD
CHIEF ENG/ARCH	JWJ
FIRE PROTECTION	HPN

DEPARTMENT OF THE NAVY
NAVAL FACILITIES ENGINEERING SYSTEMS COMMAND
NAVAL FACILITIES ENGINEERING SYSTEMS COMMAND ~ MIDATLANTIC
MIDLANT DC CORE
NAVAL STATION - NORFOLK, VA
MARINE CORPS BASE
CAMP LEJEUNE, NC
P-1550 SOF MARINE RAIDER
BATTALION / COMPANY / TEAM FACILITIES
COVER SHEET

SCALE:	AS INDICATED
EPROJECT NO.:	1701820
CONSTR. CONTR. NO.	
NAVFAC DRAWING NO.	12903743
SHEET	1 OF 122

A3
CO STG
G-001

FINAL SUBMITTAL
DRAWFORM REVISION: 25 AUGUST 2020

S:\projects\2021\2122 MIDLANT OL P-1550 SOF Marine Battalion CompanyTeam Facilities\2122 Design\2122 Dwgs\2122 ARCH 2023_A3.rvt
File
Print
5/9/2026 1:03:45 PM

PROJECT LOCATION

REGIONAL MAP

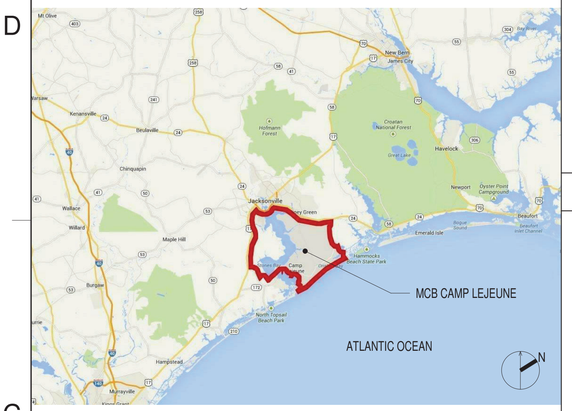

VICINITY MAP

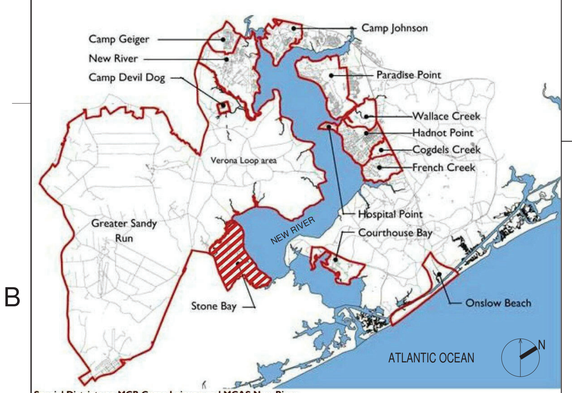

Special Districts on MCB Camp Lejeune and MCAS New River

SITE MAP

Stone Bay

DESIGN TEAM

ARCHITECT
MBF ARCHITECTS, P.A.
317-C POLLOCK STREET
NEW BERN, NC 28560

CIVIL
STANTEC
801 JONES FRANKLIN ROAD, SUITE 300
RALEIGH NC 27606

LANDSCAPE
STANTEC
229 PEACHTREE STREET NE, SUITE 1900
ATLANTA GA 30303

GEOTECHNICAL
ECS SOUTHEAST, LLP
6714 NETHERLANDS DRIVE
WILMINGTON, NC 28405

LIFE SAFETY
JENSEN HUGHES
4445 CORPORATION LANE, SUITE 211
VIRGINIA BEACH, VA 23455

STRUCTURAL
KAYDOS-DANIELS ENGINEERS, PLLC
400-201 WEST MORGAN STREET
RALEIGH, NC 27603

COMPREHENSIVE INTERIOR DESIGN
WITHIN INTERIOR DESIGN, INC.
1008 GRANBY STREET
NORFOLK, VA 23510

FIRE ALARM /FIRE PROTECTION
JENSEN HUGHES
4445 CORPORATION LANE, SUITE 211
VIRGINIA BEACH, VA 23455

PLUMBING / MECHANICAL / ELECTRICAL
CRENSHAW CONSULTING ENGINEERS
3516 BUSH STREET, SUITE 200
RALEIGH, NC 27609

TELECOMMUNICATIONS
CRENSHAW CONSULTING ENGINEERS
3516 BUSH STREET, SUITE 200
RALEIGH, NC 27609

LIGHTNING PROTECTION
CRENSHAW CONSULTING ENGINEERS
3516 BUSH STREET, SUITE 200
RALEIGH, NC 27609

AUDIOVISUAL
THORBURN ASSOCIATES, INCORPORATED
2500 GATEWAY CENTRE BLVD., SUITE 800
MORRISVILLE, NC 27560

GENERAL PROJECT NOTES

1. WHERE EXISTING CONSTRUCTION IS DAMAGED BY CONSTRUCTION REQUIRED BY THESE DOCUMENTS. REPAIR THE DAMAGED ITEM(S) WITH MATERIALS TO MATCH THE ADJACENT MATERIAL, TEXTURE AND COLOR.
2. FIELD VERIFY EXISTING DIMENSIONS, PRIOR TO ORDERING MATERIALS OR BEGINNING DEMOLITION.
3. ALL ITEMS NOT SHOWING AS "EXISTING" MUST BE PROVIDED AND INSTALLED UNDER THE REQUIREMENTS OF THIS CONTRACT.
4. COORDINATE LAY DOWN AREA WITH THE CONTRACTING OFFICER PRIOR TO THE PRECONSTRUCTION MEETING. THE ALLOWABLE AREA SIZE MUST BE ESTABLISHED BY THE CONTRACTING OFFICER.
5. MANUFACTURER'S TRADE NAMES LISTED ARE NOT INTENDED TO BE PROPRIETARY. PRODUCTS OF OTHER MANUFACTURERS WILL BE ACCEPTABLE PROVIDED THEY MATCH THE COLOR, FINISHES, TEXTURES AND PATTERNS OF THE MANUFACTURER LISTED, AND MEET THE TECHNICAL REQUIREMENTS OF THE SPECIFICATIONS.
6. OBSERVE AND MAINTAIN BUILDING AND COMPOUND SECURITY REQUIREMENTS AS DIRECTED BY THE CONTRACTING OFFICER.
7. CONSTRUCTION WILL BE ACCOMPLISHED IN AND AROUND AREAS WHICH WILL REMAIN OPERATIONAL. AVOID INTERFERENCE WITH THE OPERATIONAL WORK ROUTINE.
8. ALL SUBMITTALS REQUIRED BY THESE DRAWINGS OR SPECIFICATIONS MUST BE SUBMITTED TO THE CONTRACTING OFFICER FOR APPROVAL TO COMMENCEMENT OF RELATED WORK.

GOVERNING REGULATIONS

BUILDING CODE:
UNIFIED FACILITIES CRITERIA (UFC) 1-200-01 (20 JUNE 2016)
UNIFIED FACILITIES CRITERIA (UFC) 1-200-02 (01 DEC. 2016)
UNIFIED FACILITIES CRITERIA (UFC) 3-110-03 (01 MAY 2012)

ACCESSIBILITY CODE:
UNIFORM ACCESSIBILITY STANDARDS (UFAS)
AMERICANS WITH DISABILITIES ACT (ADA)
ACCESSIBILITY GUIDELINES FOR BUILDINGS AND FACILITIES (ADAAG)

MECHANICAL CODE:
INTERNATIONAL MECHANICAL CODE (IMC) 2009

ELECTRICAL CODE:
NFPA 70, NATIONAL ELECTRIC CODE

PLUMBING CODE:
INTERNATIONAL PLUMBING CODE (IPC) 2009

FIRE PREVENTION & LIFE SAFETY CODE:
UNIFIED FACILITIES CRITERIA (UFC) 3-600-01 (15 DEC. 2009)
NFPA 101, LIFE SAFETY CODE

SYM	DESCRIPTION	DATE	APPR

NAVFAC

DARDEN J. EURE III REGISTERED ARCHITECT 8840 NORTH CAROLINA NEW BERN NC
08 MAY 2026 SEAL

mbf architects pa
317-C Pollock Street | New Bern, NC 28560
252.637.6373 | mbfarchitects.com
A/E INFO

APPROVED
FOR COMMANDER NAVFAC 5/13/2026
ACTIVITY
SATISFACTORY TO
DES REL DRW ESS CHK DJE,III
PM/DM SGL/MDM
BRANCH MANAGER DJD
CHIEF ENG/ARCH JWJ
FIRE PROTECTION HPN

DEPARTMENT OF THE NAVY
NAVAL FACILITIES ENGINEERING SYSTEMS COMMAND
NAVAL FACILITIES ENGINEERING SYSTEMS COMMAND - MIDATLANTIC
MIDLANT DC CORE
NAVAL STATION - NORFOLK, VA
MARINE CORPS BASE
CAMP LEJEUNE, NC
P-1550 SOF MARINE RAIDER BATTALION / COMPANY / TEAM FACILITIES
LOCATION MAPS, NOTES AND INDEX OF DRAWINGS

SCALE: AS INDICATED
EPROJECT NO.: 1701820
CONSTR. CONTR. NO.
NAVFAC DRAWING NO. 12903744
SHEET 2 OF 122

MBF ARCHITECTS P.A. REGISTERED ARCHITECTURE CORPORATION CERT. NO. 50679 NORTH CAROLINA NEW BERN N.C.

A3
CO STG
G-002

FINAL SUBMITTAL
DRAWFORM REVISION: 25 AUGUST 2020

S:\projects\2021\2122 MIDLANT CL P-1550 SOF Marine Battalion Company\Team Facilities\2122 Design\2122 Dwgs\2122 ARCH 2023_A3.rvt
File
Print
5/9/2026 1:03:45 PM

SHEET NO		NAVFAC NO	PLATE NO	SHEET TITLE
			G	**GENERAL**
1	OF 122	12903743	G-001	COVER SHEET
2	OF 122	12903744	G-002	LOCATION MAPS AND INDEX OF DRAWINGS
3	OF 122	12903745	G-003	INDEX OF DRAWINGS
			GI	**LIFE SAFETY**
4	OF 122	12903746	GI001	LIFE SAFETY NOTES AND LEGEND - COMPANY STORAGE BUILDING
5	OF 122	12903747	GI002	CODE COMPLIANCE SITE PLAN - COMPANY STORAGE BUILDING
6	OF 122	12903748	GI101	LIFE SAFETY FLOOR PLAN - COMPANY STORAGE BUILDING
			S	**STRUCTURAL**
7	OF 122	12903749	S-001	COVER SHEET
8	OF 122	12903750	S-002	STRUCTURAL NOTES
9	OF 122	12903751	S-003	STRUCTURAL NOTES
10	OF 122	12903752	S-101	FOUNDATION PLAN - AREA A
11	OF 122	12903753	S-102	FOUNDATION PLAN - AREA B
12	OF 122	12903754	S-501	GENERAL CONSTRUCTION DETAILS
13	OF 122	12903755	S-502	GENERAL CONSTRUCTION DETAILS
14	OF 122	12903756	S-503	GENERAL CONSTRUCTION DETAILS
15	OF 122	12903757	S-504	GENERAL CONSTRUCTION DETAILS
16	OF 122	12903758	S-511	DETAILS
17	OF 122	12903759	S-512	DETAILS
			A	**ARCHITECTURAL**
18	OF 122	12903760	A-001	SYMBOL LEGEND AND ABBREVIATIONS
19	OF 122	12903761	A-101	COMPREHENSIVE FLOOR PLAN
20	OF 122	12903762	A-102	FLOOR PLAN - AREA A
21	OF 122	12903763	A-103	FLOOR PLAN - AREA B
22	OF 122	12903764	A-104	COMPREHENSIVE REFLECTED CEILING PLAN
23	OF 122	12903765	A-105	REFLECTED CEILING PLAN - AREA A
24	OF 122	12903766	A-106	REFLECTED CEILING PLAN - AREA B
25	OF 122	12903767	A-107	COMPREHENSIVE ROOF PLAN
26	OF 122	12903768	A-108	AIR AND MOISTURE BARRIER PLAN, DETAILS AND NOTES
27	OF 122	12903769	A-201	EXTERIOR ELEVATIONS
28	OF 122	12903770	A-202	EXTERIOR ELEVATIONS
29	OF 122	12903771	A-203	EXTERIOR ELEVATIONS
30	OF 122	12903772	A-301	BUILDING SECTIONS
31	OF 122	12903773	A-302	WALL SECTIONS
32	OF 122	12903774	A-401	ENLARGED TOILET PLANS AND ELEVATIONS
33	OF 122	12903775	A-501	WALL TYPE DETAILS
34	OF 122	12903776	A-502	MASONRY DETAILS
35	OF 122	12903777	A-503	MISCELLANEOUS DETAILS
36	OF 122	12903778	A-504	MISCELLANEOUS DETAILS
37	OF 122	12903779	A-505	MISCELLANEOUS DETAILS
38	OF 122	12903780	A-506	ROOF DETAILS
39	OF 122	12903781	A-601	DOOR AND FRAME SCHEDULE
40	OF 122	12903782	A-602	DOOR AND FRAME DETAILS
41	OF 122	12903783	A-603	DOOR AND FRAME DETAILS
42	OF 122	12903784	A-604	WINDOW SCHEDULE AND DETAILS
			I	**INTERIOR DESIGN**
43	OF 122	12903785	I-101	FURNITURE PLAN - AREA A
44	OF 122	12903786	I-102	FURNITURE PLAN - AREA B
45	OF 122	12903787	I-111	FINISH PLAN - AREA A
46	OF 122	12903788	I-112	FINISH PLAN - AREA B
47	OF 122	12903789	I-121	SIGNAGE PLAN - AREA A
48	OF 122	12903790	I-122	SIGNAGE PLAN - AREA B
49	OF 122	12903791	I-201	ELEVATIONS & DETAILS
50	OF 122	12903792	I-501	SIGNAGE DETAILS
51	OF 122	12903793	I-601	SCHEDULES & LEGENDS

			F	**FIRE PROTECTION**
52	OF 122	12903794	FA001	FIRE ALARM NOTES AND LEGEND - COMPANY STORAGE BUILDING
53	OF 122	12903795	FA101	FIRE ALARM FLOOR PLAN - COMPANY STORAGE BUILDING AREA A
54	OF 122	12903796	FA102	FIRE ALARM FLOOR PLAN - COMPANY STORAGE BUILDING AREA B
55	OF 122	12903797	FA501	FIRE ALARM DETAILS
56	OF 122	12903798	FA502	FIRE ALARM DETAILS
57	OF 122	12903799	FA503	FIRE ALARM DETAILS
58	OF 122	12903800	FX001	FIRE SUPPRESSION NOTES AND LEGEND - COMPANY STORAGE BUILDING
59	OF 122	12903801	FX002	FIRE SUPPRESSION SITE MAP
60	OF 122	12903802	FX101	FIRE SUPPRESSION FLOOR PLAN - COMPANY STORAGE BUILDING AREA A
61	OF 122	12903803	FX102	FIRE SUPPRESSION FLOOR PLAN - COMPANY STORAGE BUILDING AREA B
62	OF 122	12903804	FX401	FIRE SUPPRESSION ENLARGED FIRE PUMP ROOM - COMPANY STORAGE BUILDING
63	OF 122	12903805	FX501	FIRE SUPPRESSION DETAILS
			P	**PLUMBING**
64	OF 122	12903806	P-001	PLUMBING COVER SHEET
65	OF 122	12903807	P-101	FIRST FLOOR PLAN - AREA A - WASTE AND VENT
66	OF 122	12903808	P-102	FIRST FLOOR PLAN - AREA B - WASTE AND VENT
67	OF 122	12903809	P-103	FIRST FLOOR PLAN - AREA A - WATER
68	OF 122	12903810	P-104	FIRST FLOOR PLAN - AREA B - WATER
69	OF 122	12903811	P-401	ENLARGED PLANS - PLUMBING
70	OF 122	12903812	P-501	PLUMBING DETAILS
71	OF 122	12903813	P-601	PLUMBING SCHEDULES
72	OF 122	12903814	P-701	RISER DIAGRAM - WASTE AND VENT
73	OF 122	12903815	P-702	RISER DIAGRAM - WATER
			M	**MECHANICAL**
74	OF 122	12903816	M-001	MECHANICAL COVER SHEET
75	OF 122	12903817	MH101	FLOOR PLAN - MECHANICAL - AREA A
76	OF 122	12903818	MH102	FLOOR PLAN - MECHANICAL - AREA B
77	OF 122	12903819	M-301	MECHANICAL SECTION VIEWS
78	OF 122	12903820	MH401	MECHANICAL ROOM AND CHILLER YARD ENLARGED - MECHANICAL
79	OF 122	12903821	MP401	MECHANICAL ROOM AND CHILLER YARD ENLARGED - MECHANICAL PIPNG
80	OF 122	12903822	M-501	MECHANICAL DETAILS
81	OF 122	12903823	M-502	MECHANICAL DETAILS
82	OF 122	12903824	M-503	MECHANICAL DETAILS
83	OF 122	12903825	M-504	MECHANICAL DETAILS
84	OF 122	12903826	M-505	MECHANICAL DETAILS
85	OF 122	12903827	M-506	MECHANICAL DETAILS
86	OF 122	12903828	M-507	MECHANICAL DETAILS
87	OF 122	12903829	M-508	MECHANICAL DETAILS
88	OF 122	12903830	M-601	MECHANICAL SCHEDULES
89	OF 122	12903831	M-602	MECHANICAL SCHEDULES
90	OF 122	12903832	M-603	MECHANICAL SCHEDULES
91	OF 122	12903833	M-701	MECHANICAL CONTROLS
92	OF 122	12903834	M-702	MECHANICAL CONTROLS
93	OF 122	12903835	M-703	MECHANICAL CONTROLS
94	OF 122	12903836	M-704	MECHANICAL CONTROLS
95	OF 122	12903837	M-705	MECHANICAL CONTROLS
96	OF 122	12903838	M-706	MECHANICAL CONTROLS
97	OF 122	12903839	M-801	CHILLED AND HOT WATER SYSTEM DIAGRAMS
98	OF 122	12903840	M-901	PARTIAL 3D ISOMETRIC VIEWS - MECHANICAL ROOMS
99	OF 122	12903841	M-902	OVERALL 3D ISOMETRIC VIEW - MECHANICAL
			E	**ELECTRICAL**
100	OF 122	12903842	E-001	ELECTRICAL NOTES AND LEGENDS
101	OF 122	12903843	E-101	FLOOR PLAN - AREA A POWER
102	OF 122	12903844	E-102	FLOOR PLAN - AREA B POWER
103	OF 122	12903845	E-103	FLOOR PLAN - AREA A EQUIPMENT CONNECTIONS
104	OF 122	12903846	E-104	FLOOR PLAN - AREA B EQUIPMENT CONNECTIONS
105	OF 122	12903847	E-105	FLOOR PLAN - AREA A LIGHTING
106	OF 122	12903848	E-106	FLOOR PLAN - AREA B LIGHTING
107	OF 122	12903849	E-107	ROOF PLAN - LIGHTNING PROTECTION
108	OF 122	12903850	E-401	ENLARGED FLOOR PLANS
109	OF 122	12903851	E-501	ELECTRICAL DETAILS
110	OF 122	12903852	E-502	ELECTRICAL DETAILS
111	OF 122	12903853	E-503	ELECTRICAL DETAILS
112	OF 122	12903854	E-504	ELECTRICAL DETAILS
113	OF 122	12903855	E-601	ELECTRICAL SCHEDULES
114	OF 122	12903856	E-602	ELECTRICAL SCHEDULES
115	OF 122	12903857	E-603	ELECTRICAL SCHEDULES
116	OF 122	12903858	E-701	ELECTRICAL RISER DIAGRAM
			T	**TELECOMMUNICATIONS**
117	OF 122	12903859	T-001	TELECOMMUNICATIONS NOTES AND LEGEND
118	OF 122	12903860	T-101	FLOOR PLAN - AREA A TELECOMMUNICATIONS
119	OF 122	12903861	T-102	FLOOR PLAN - AREA B TELECOMMUNICATIONS
120	OF 122	12903862	T-501	TELECOMMUNICATIONS DETAIL S
121	OF 122	12903863	T-502	TELECOMMUNICATIONS DETAILS
122	OF 122	12903864	T-503	TELECOMMUNICATIONS DETAILS

SYM	DESCRIPTION	DATE	APPR

NAVFAC

DARDEN J. EURE, III REGISTERED ARCHITECT 8840 NORTH CAROLINA NEW BERN NC

08 MAY 2026 SEAL

mbf architects pa
317-C Pollock Street | New Bern, NC 28560
252.637.6373 | mbfarchitects.com
A/E INFO

APPROVED
FOR COMMANDER NAVFAC 5/13/2026
ACTIVITY

SATISFACTORY TO

DES	REL	DRW	ESS	CHK	DJE,III
PM/DM					SGL/MDM
BRANCH MANAGER					DJD
CHIEF ENG/ARCH					JWJ
FIRE PROTECTION					HPN

DEPARTMENT OF THE NAVY
NAVAL FACILITIES ENGINEERING SYSTEMS COMMAND
MIDLANT DC CORE
MARINE CORPS BASE

NAVAL FACILITIES ENGINEERING SYSTEMS COMMAND ~ MIDATLANTIC
NAVAL STATION - NORFOLK, VA
CAMP LEJEUNE, NC

P-1550 SOF MARINE RAIDER BATTALION / COMPANY / TEAM FACILITIES

INDEX OF DRAWINGS

SCALE: AS INDICATED
EPROJECT NO.: 1701820
CONSTR. CONTR. NO.

MBF ARCHITECTS P.A. REGISTERED ARCHITECTURAL CORPORATION CERT. NO. 50679 NORTH CAROLINA NEW BERN N.C.

A3
CO STG

NAVFAC DRAWING NO.
12903745
SHEET 3 OF 122
G-003

FINAL SUBMITTAL

DRAWFORM REVISION: 25 AUGUST 2020

S:\projects\2021\2122 MIDLANT CL P-1550 SOF Marine Battalion Company\Team Facilities\2122 Design\2122 Dwgs\2122 ARCH 2023_A3.rvt
File
Print 5/9/2026 1:03:46 PM

APPLICABLE BUILDING CODES

1.	IBC	INTERNATIONAL BUILDING CODE 2021
2.	UFC 1-200-01	DOD BUILDING CODE, 24 FEBRUARY 2023
3.	UFC 3-520-01	INTERIOR ELECTRICAL SYSTEMS, 12 APRIL 2021
4.	UFC 3-600-01	FIRE PROTECTION ENGINEERING FOR FACILITIES, 6 MAY 2021
5.	UFC 4-021-01	DESIGN AND O&M: MASS NOTIFICATION SYSTEMS, JANUARY 2010
6.	UFC 4-440-01	WAREHOUSES AND STROAGE FACILITIES, 1 APRIL 2019
7.	NFPA 10	PORTABLE FIRE EXTINGUISHER 2021
8.	NFPA 13	INSTALLATION OF SPRINKLER SYSTEMS 2022
9.	NFPA 20	INSTALLATION OF STATIONARY FIRE PUMPS FOR FIRE PROTECTION 2022
10.	NFPA 24	INSTALLATION OF PRIVATE FIRE SERVICE MAINS AND THEIR APPURTENANCES 2022
11.	NFPA 70	NATIONAL ELECTRICAL CODE 2023
12.	NFPA 72	NATIONAL FIRE ALARM AND SIGNALING CODE 2022
13.	NFPA 90A	INSTALLATION OF AIR-CONDITIONING AND VENTILATING SYSTEM 2021
14.	NFPA 101	LIFE SAFETY CODE (LSC) 2021

USE GROUP/OCCUPANCY

S-1 STORAGE [IBC §311.2 & LSC §6.1.13] - ORDINARY HAZARD (LSC 42.1.5)

FOR IBC, BUILDING IS A S-1 OCCUPANCY.
FOR LSC, BUILDING IS A STORAGE OCCUPANCY.

FIRE PROTECTION SYSTEMS

WET PIPE SPRINKLER SYSTEMS
EMERGENCY VOICE/MASS NOTIFICATION FIRE ALARM SYSTEM.

CONSTRUCTION TYPE

TYPE II-B

BUILDING AREA & HEIGHT:

BASED ON SPRINKLERED GROUP S-1	REQUIRED	PROVIDED
ALLOWABLE AREA (IBC TABLE 506.2):	52,500-SF	17,487-SF
ALLOWABLE STORIES (IBC TABLE 504.4):	1-STORY*	1-STORY
ALLOWABLE HEIGHT (IBC TBALE 504.3):	75-FT	26-FT

*LIMITED TO A SINGLE STORY TO ALLOW FOR THE INCREASE IN ALLOWABLE AREA FOR A SINGLE-STORY BUILDING PER IBC TABLE 506.2

FIRE RESISTANCE RATING REQUIREMENTS FOR BUILDING ELEMENTS

(IBC TABLE 601, TYPE II-B CONSTRUCTION)

	REQUIRED	PROVIDED
PRIMARY STRUCTRUAL FRAME, INCL. COLUMNS, GIRDERS & TRUSSES	0-HOUR	0-HOUR
PRIMARY STRUCTURAL FRAME SUPPORTING A ROOF ONLY	0-HOUR	0-HOUR
BEARING WALLS, INTERIOR & EXTERIOR	0-HOUR	0-HOUR
FLOOR CONSTRUCTION	0-HOUR	0-HOUR
ROOF CONSTRUCTION (SECONDARY MEMBERS ONLY)	0-HOUR	0-HOUR

EXTERIOR WALLS

EXTERIOR FIRE EXPOSURE BASED ON SEPARATION DISTANCE (TYPE II-B)

SEPARATION DISTANCE	GROUP S-1	PROVIDED
< 5 FT	2 - HOUR	-
> 5 FT AND < 10 FT	1 - HOUR	-
> 10 FT	0 - HOUR	0 - HOUR

THERE IS A DISTANCE OF AT LEAST 40-FT BETWEEN THE BUILDING AND ANY OTHER STRUCTURES ON ALL SIDES. THIS PROVIDES A FSD OF AT LEAST 30-FT FROM THE ADJACENT BUILDINGS TO AN IMAGIANRY LOT LINE AND AT LEAST 10-FT FROM THE IMAGINARY LOTE LINE TO THE BUILDING; THEREFORE, THERE IS NO FIRE RESISTANCE RATING REQUIRED ON THE EXTERIOR WALLS BASED ON THE FSD.

INTERIOR FIRE RESISTANCE RATING REQUIREMENTS

ROOM	REQUIRED SEPARATION	PROVIDED
FIRE PUMP ROOM	1-HOUR (NFPA 20 TABLE 4.14.1.1.2)	1-HOUR

JENSEN HUGHES

INTERIOR FINISH CLASSIFICATION LIMITS

LIMITS (BASED ON STORAGE OCCUPANCY WITH REDUCTION FOR SPRINKLERS)	REQUIRED	PROVIDED
EXIT (TABLE A10.2.2.)	MINIMUM CLASS C	MINIMUM CLASS C
EXIST ACCESS CORRIDORS (TABLE A10.2.2.)	MINIMUM CLASS C	MINIMUM CLASS C
OTHER SPACES (TABLE A10.2.2)	MINIMUM CLASS C	MINIMUM CLASS C
FLOOR FINISH	MINIMUM 0.1 W/CM^2	MINIMUM 0.1 W/CM^2

OCCUPANT LOADS

OCCUPANT LOADS (LSC TABLE 7.3.1.2)

STORAGE USE (IN STORAGE OCCUPANCY)	MAXIMUM NUMBER OF PERSONS EXPECTED AT ONE TIME
BUSINESS	150 SF/PERSON
MEP SPACE	500 SF/PERSON

AREA	OCCUPANCY/USE	APPROX. AREA (SF)	OCCUPANT LOAD FACTOR (SF/PERSON)	OCCUPANT LOAD (PERSONS)
STORAGE	S-1 / STORAGE	14,273	MAX NO. EXPECTED	45
TOILETS / JANITOR	S-1 / BUSINESS	176	150	0
UTILITY SPACES	S-1 / MEP	1,846	500	5
	TOTAL	16,295	-	50

TRAVEL DISTANCE (LSC TABLE A.7.6)

COMMON PATH OF TRAVEL STORAGE:	100 FT
TOTAL TRAVEL DISTANCE STORAGE:	400 FT
DEAD END CORRIDOR STORAGE:	100 FT

CAPACITY OF EXITS (LSC TABLE 7.3.3.1)

LEVEL COMPONENTS (WIDTH/PERSON) 0.2 IN/PERSON

NUMBER OF EXITS (LCS 7.4)

2 FOR OCCUPANT LOAD ≤ 500, 3 FOR OCCUPANT LOAD > 500 AND ≤ 1,000.

FLOOR LEVEL	REQUIRED EXIT CAPACITY	AVAILABLE EXIT CAPACITY	NUMBER OF EXITS REQUIRED	NUMBER OF EXITS PROVIDED
FIRST FLOOR	50	2,240	2	12

ADDITIONAL LIFE SAFETY CRITERIA

MEANS OF EGRESS MUST BE ILLUMINATED IN ACCORDANCE WITH LSC 7.8 (LSC 42.2.8.1). ARTIFICIAL LIGHTING IS REQUIRED AT LOCATIONS AND TIMES NECESSARY TO MAINTAIN ADEQUATE ILLUMINATION (LSC 7.8.1.2.1).

EMERGENCY LIGHTING SYSTEMS MUST BE PROVIDED IN ACCORDANCE WITH LSC 7.9 (LSC 42.2.9).

MEANS OF EGRESS MUST BE PROVIDED WITH SIGNS IN ACCORDANCE WITH LSC 7.10 AND UFC 3-600-01 2-5.2 (LSC 42.2.10). SIGNS MUST HAVE LETTERING ON AN OPAQUE BACKGROUND. INTERNALLY ILLUMINATED SIGNS MUST BE LIGHT EMITTING DIODE (LED) TYPE, ELECTROLUMINESCENCE (LEC), OR COLD CATHODE TYPE. INCANDESCENT FIXTURES ARE NOT PERMITTED. RADIOLUMINOUS EXIT SIGNS ARE NOT PERMITTED (UFC 3-600-01 10-2.1).

FIRE EXTINGUISHERS ARE NOT REQUIRED IN STORAGE OCCUPANCIES (LSC 42.3.5 & UFC 3-600-01 4-9).

LIFE SAFETY LEGEND

X = REQUIRED EGRESS CAPACITY (PERSONS)
Y = PROVIDED EGRESS CAPACITY (PERSONS)

XXXXX ROOM AREA (SF)
XXXX OCCUPANT FACTOR (SF/PERSON)
XXXX NUMBER OF OCCUPANTS (PERSONS)

1-HR FIRE BARRIER

TD = XXFT TRAVEL PATH AND DISTANCE

CP = XXFT COMMON PATH OF TRAVEL

K KNOX BOX

FMCP FIRE ALARM MASS NOTIFICATION CONTROL PANEL

SYM	DESCRIPTION	DATE	APPR

NAVFAC

COMMONWEALTH OF VIRGINIA
AARON P FREID
Lic. No. 044409
05.08.2026
PROFESSIONAL ENGINEER
SEAL

mbf architects pa
317-C Pollock Street | New Bern, NC 28560
252.637.6373 | mbfarchitects.com
A/E INFO

APPROVED
FOR COMMANDER NAVFAC 5/13/2026
ACTIVITY
SATISFACTORY TO
DES APF DRW AHE CHK AJW
PM/DM SGL/MDM
BRANCH MANAGER HPN
CHIEF ENG/ARCH JWJ
FIRE PROTECTION HPN

DEPARTMENT OF THE NAVY
NAVAL FACILITIES ENGINEERING SYSTEMS COMMAND
MIDLANT DC CORE
MARINE CORPS BASE
NAVAL FACILITIES ENGINEERING SYSTEMS COMMAND ~ MIDATLANTIC
NAVAL STATION - NORFOLK, VA.
CAMP LEJEUNE, NC
P-1550 SOF MARINE RAIDER
BATTALION / COMPANY / TEAM FACILITIES
LIFE SAFETY NOTES AND LEGEND - COMPANY STORAGE BUILDING

SCALE: AS INDICATED
EPROJECT NO.: 1701820
CONSTR. CONTR. NO.
NAVFAC DRAWING NO. 12903746
SHEET 4 OF 122
A3
CO STG
GI001
FINAL SUBMITTAL
DRAWFORM REVISION: 25 AUGUST 2020

File Y:\Shared\FPS\Legacy\VirginiaBeach_2022 Projects\22015 1AJW22015 MBFA - MCAS New River P-1550 SOF Marine Battalion Co Facilities\DWG - Revit 2023\Central Models\BLDG P1550-1701820-A3-F.rvt
Print 5/6/2026 2:14:22 PM

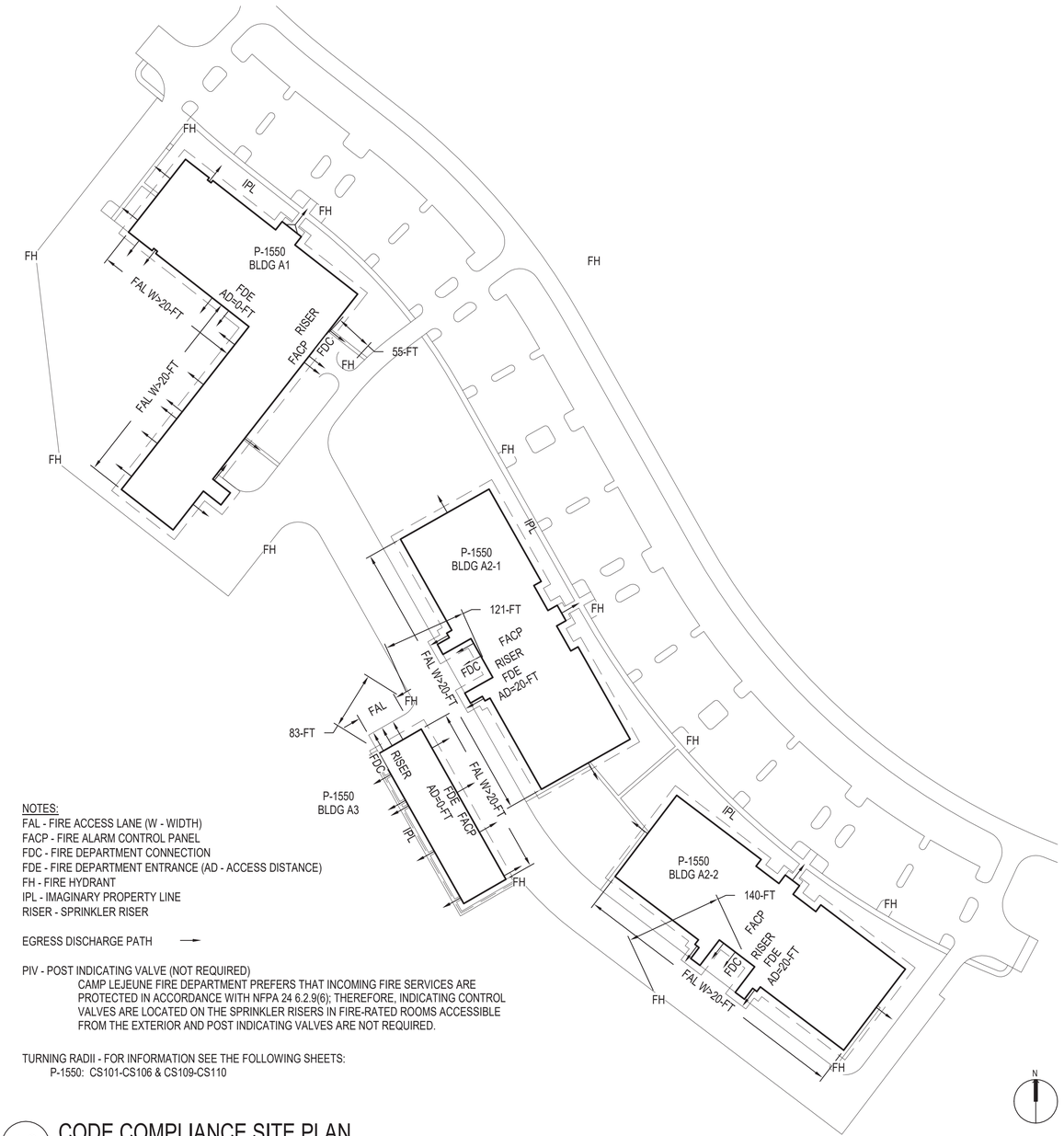

NOTES:
FAL - FIRE ACCESS LANE (W - WIDTH)
FACP - FIRE ALARM CONTROL PANEL
FDC - FIRE DEPARTMENT CONNECTION
FDE - FIRE DEPARTMENT ENTRANCE (AD - ACCESS DISTANCE)
FH - FIRE HYDRANT
IPL - IMAGINARY PROPERTY LINE
RISER - SPRINKLER RISER

EGRESS DISCHARGE PATH →

PIV - POST INDICATING VALVE (NOT REQUIRED)
CAMP LEJEUNE FIRE DEPARTMENT PREFERS THAT INCOMING FIRE SERVICES ARE PROTECTED IN ACCORDANCE WITH NFPA 24 6.2.9(6); THEREFORE, INDICATING CONTROL VALVES ARE LOCATED ON THE SPRINKLER RISERS IN FIRE-RATED ROOMS ACCESSIBLE FROM THE EXTERIOR AND POST INDICATING VALVES ARE NOT REQUIRED.

TURNING RADII - FOR INFORMATION SEE THE FOLLOWING SHEETS:
P-1550: CS101-CS106 & CS109-CS110

A2 CODE COMPLIANCE SITE PLAN
SCALE: 1" = 100'-0"

0 100' 200'

JENSEN HUGHES

SYM	DESCRIPTION	DATE	APPR

NAVFAC

COMMONWEALTH OF VIRGINIA
AARON P FREID
Lic. No. 044409
05.08.2026
PROFESSIONAL ENGINEER
SEAL

mbf architects pa
317-C Pollock Street | New Bern, NC 28560
252.637.6373 | mbfarchitects.com
A/E INFO

APPROVED
FOR COMMANDER NAVFAC 5/15/2026
ACTIVITY

SATISFACTORY TO
DES APF DRW AHE CHK AJW
PM/DM SGL/MDM
BRANCH MANAGER HPN
CHIEF ENG/ARCH JWJ
FIRE PROTECTION HPN

DEPARTMENT OF THE NAVY
NAVAL FACILITIES ENGINEERING SYSTEMS COMMAND
MID-ATLANTIC DIV. CORE
MARINE CORPS BASE
NAVAL FACILITIES ENGINEERING SYSTEMS COMMAND ~ MIDATLANTIC
NAVAL STATION - NORFOLK, VA
CAMP LEJEUNE, NC
P-1550 SOF MARINE RAIDER
BATTALION / COMPANY / TEAM FACILITIES
CODE COMPLIANCE SITE PLAN - COMPANY STORAGE BUILDING

SCALE: AS INDICATED
EPROJECT NO.: 1701820
CONSTR. CONTR. NO.
NAVFAC DRAWING NO. 12903747
SHEET 5 OF 122
A3
CO STG
GI002
FINAL SUBMITTAL
DRAWFORM REVISION: 25 AUGUST 2020

File Y:\Shared\FPS\Legacy\VirginiaBeach_2022 Projects\22015 1AJW22015 MBFA - MCAS New River P-1550 SOF Marine Battalion Co Facilities\DWG - Revit 2023\Central Models\BLDG P1550-1701820-A3-F.rvt
Print 5/6/2026 2:14:22 PM

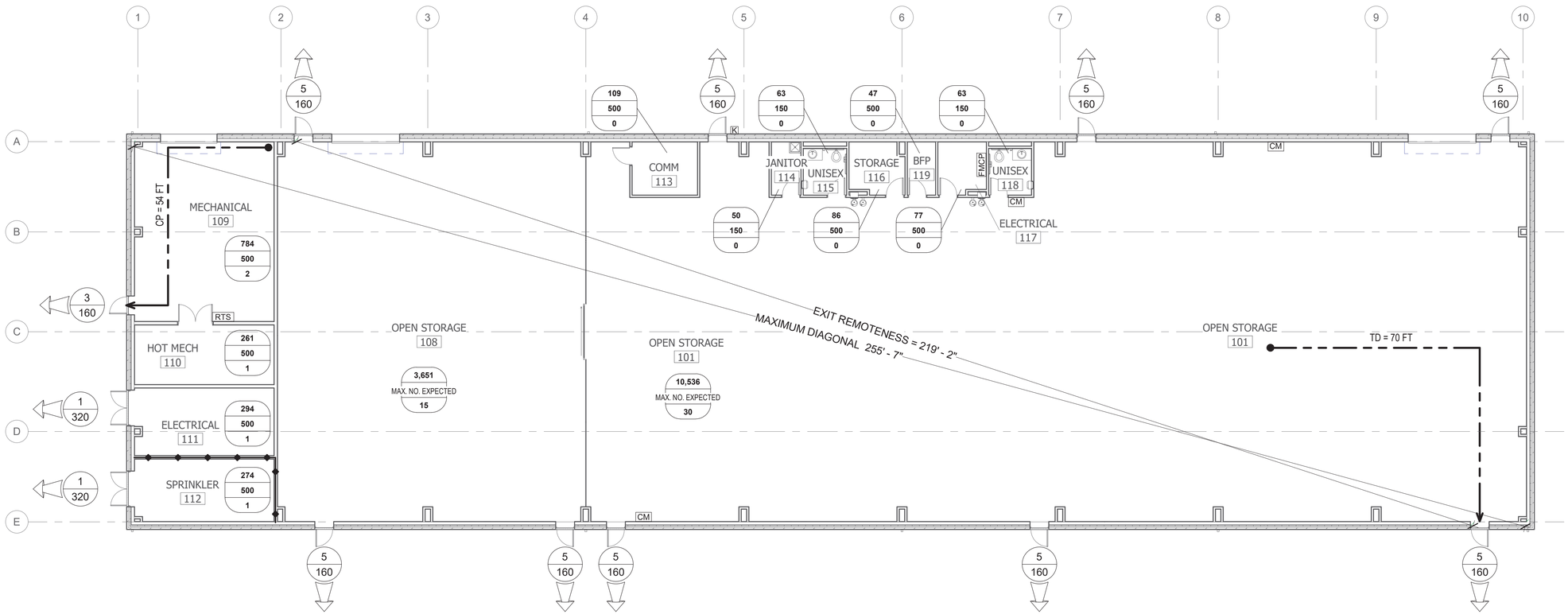

A1 LIFE SAFETY FLOOR PLAN - COMPANY STORAGE BUILDING

SCALE: 3/32" = 1'-0"

GRAPHIC SCALE: 3/32"=1'-0"

10' 0 10' 21' 32'

JENSEN HUGHES

SYM	DESCRIPTION	DATE	APPR

NAVFAC

COMMONWEALTH OF VIRGINIA
AARON P FREID
Lic. No. 044409
05.08.2026
PROFESSIONAL ENGINEER
SEAL

mbf architects pa
317-C Pollock Street | New Bern, NC 28560
252.637.6373 | mbfarchitects.com
A/E INFO

APPROVED
FOR COMMANDER NAVFAC 5/13/2026
ACTIVITY
SATISFACTORY TO
DES APF DRW AHE CHK AJW
PM/DM SGL/MDM
BRANCH MANAGER HPN
CHIEF ENG/ARCH JWJ
FIRE PROTECTION HPN

DEPARTMENT OF THE NAVY
NAVAL FACILITIES ENGINEERING SYSTEMS COMMAND
NAVAL FACILITIES ENGINEERING SYSTEMS COMMAND ~ MIDATLANTIC
NAVAL STATION - NORFOLK, VA
MID-ANT DC CORE
MARINE CORPS BASE
CAMP LEJEUNE, NC
P-1550 SOF MARINE RAIDER
BATTALION / COMPANY / TEAM FACILITIES
LIFE SAFETY FLOOR PLAN - COMPANY STORAGE BUILDING

SCALE: AS INDICATED
EPROJECT NO.: 1701820
CONSTR. CONTR. NO.
NAVFAC DRAWING NO. 12903748
SHEET 6 OF 122
A3
CO STG
GI101
FINAL SUBMITTAL
DRAWFORM REVISION: 25 AUGUST 2020

Y:\Shared\FPS\Legacy\VirginiaBeach_2022 Projects\22015 1AJW22015 MBFA - MCAS New River P-1550 SOF Marine Battalion Co Facilities\DWG - Revit 2023\Central Models\BLDG P1550-1701820-A3-F.rvt
File
Print
5/6/2026 2:14:24 PM

DESIGN BASIS:

1. BUILDING CODES.....2021 IBC "INTERNATIONAL BUILDING CODE"
   UFC 1-200-01, "GENERAL BUILDING REQUIREMENTS" - CHANGE 2, 12 JUNE 2023
   UFC 3-301-01, "STRUCTURAL ENGINEERING" - CHANGE 1, 2 OCTOBER 2023
   UFC 4-010-01, "MINIMUM ANTI-TERRORISM STANDARDS FOR BUILDINGS" - CHANGE 2, 30 JULY 2022

2. BUILDING RISK CATEGORY..... II

3. SUPERIMPOSED DEAD LOADS:
   a) ROOF..... 10 PSF
   b) MISCELLANEOUS.....10 PSF
4. DESIGN LIVE LOADS:
   a) ROOF.....20 PSF
   b) FLOOR (LOBBIES AND FIRST FLOOR CORRIDORS).....100 PSF
   c) FLOOR (OFFICE) = 50 PSF + 15PSF PARTITIONS.....50 PSF
   d) VEHICLE BAYS ..... 250 PSF
   MAXIMUM AXLE LOAD = 32K
   e) MECHANICAL/ELECTRICAL ROOMS..... 125 PSF
5. SNOW:
   a) GROUND SNOW LOAD ..... 10 PSF
   b) FLAT ROOF SNOW LOAD..... 10 PSF
   c) SNOW EXPOSURE FACTOR, Ce..... 1.0
   d) IMPORTANCE FACTOR, Is..... 1.0
   e) THERMAL FACTOR, Ct..... 1.0
6. WIND:
   a) BASIC WIND SPEED (3 SECOND GUST)..... 144 MPH
   b) WIND EXPOSURE CATEGORY.....B
   c) INTERNAL PRESSURE COEFFICIENT..... +/- 0.18
   d) ROOF COMPONENTS AND CLADDING..... SEE TABLE ON SHEET S-001
   e) WALL COMPONENTS AND CLADDING..... SEE TABLE ON SHEET S-001
7. SEISMIC:
   a) SITE CLASS..... D
   b) IMPORTANCE FACTOR, Ie..... 1.0
   c) ONE SECOND PERIOD SPECTRAL RESPONSE COEFFICIENT, S1.....0.055G
   d) MAPPED SPECTRAL RESPONSE COEFFICIENT, Ss.....0.115 G
   e) SHORT PERIOD SPECTRAL RESPONSE COEFFICIENT, SDS..... 0.123 G
   f) ONE SECOND PERIOD SPECTRAL RESPONSE COEFFICIENT, SD1..... 0.088 G
   g) SEISMIC RESPONSE COEFFICIENT, Cs..... 0.056
   h) RESPONSE MODIFICATION FACTOR, R.....3.0
   i) SEISMIC DESIGN CATEGORY..... B
   j) BASIC SEISMIC FORCE RESISTING SYSTEM.....PRE-ENGINEERED STEEL SYSTEM NOT SPECIFICALLY DETAILED FOR SEISMIC RESISTANCE
   k) SEISMIC BASE SHEAR.....V = .0557K
8. ANTI-TERRORISM FORCE PROTECTION
   a) BUILDING IS CLASSIFIED AS PRIMARY GATHER, LOW LEVEL OF PROTECTION
   b) MINIMUM STANDOFF DISTANCE = 82 FEET
   c) CONTROLLED PERIMETER, EXPLOSIVE WEIGHT II

NOTE: ALL PRE-ENGINEERED METAL BUILDING FRAMES TO BE DESIGN FOR MAXIMUM STORY DRIFT RATIO OF L/400 FOR ALL LATERAL LOADS.

SYMBOLS:

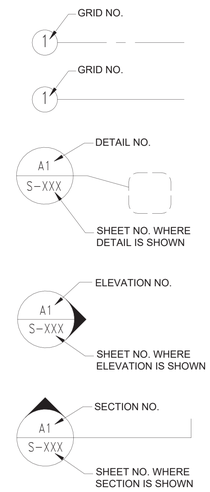

SHEET INDEX

SHEET NO	SHEET TITLE
S-001	COVER SHEET
S-002	STRUCTURAL NOTES
S-003	STRUCTURAL NOTES
S-101	FOUNDATION PLAN - AREA A
S-102	FOUNDATION PLAN - AREA B
S-501	GENERAL CONSTRUCTION DETAILS
S-502	GENERAL CONSTRUCTION DETAILS
S-503	GENERAL CONSTRUCTION DETAILS
S-504	GENERAL CONSTRUCTION DETAILS
S-511	DETAILS
S-512	DETAILS

ABBREVIATIONS:

A/C	Air Conditioning
A.B.	Anchor Bolt
A.C.I.	American Concrete Institute
ADJ.	Adjacent
A.F.F.	Above Finished Floor
AL.	Aluminum
ALT.	Alternate
A.P.A.	American Plywood Institute
ARCH.	Architect
A.S.T.M.	American Society for Testing Materials
BLW.	Below
BETWN.	Between
BLK.	Block
BLKG	Blocking
BM	Beam
B.N.	Boundry Nail
B.O.F.	Bottom of Footing
BOTT	Bottom
C	Channel
C.I.P.	Cast-in-Place
C.J.	Control Joint / Ceiling Joist
CLG	Ceiling
CLR	Clear
CMU	Concrete Masonry Unit
COL	Column
CONC	Concrete
CONN	Connection
CONST	Construction
CONT	Continuous
CSK	Counter Sink
CTR'D	Centered
DBL	Double
DEG	Degree
DEM	Demolish, Demolition
DEP	Depressed
DIA	Diameter
DIAG	Diagonal
DIM	Dimension
DO	Ditto
D.T.	Drag Truss
DWG	Drawing
DWL	Dowel
(E)	Existing
EA.	Each
E.F.	Each Face
E.J.	Expansion Joint
ELEC	Electric, Electrical
ELV	Elevation
E.N.	Edge Nail
EQ.	Equal
EQPT.	Equipment
E.S.	Each Side
E.W.	Each Way
EXIST'G	Existing
EXP.	Expansion
EXT.	Exterior
F.F.	Finished Floor
F.G.	Finish Grade
FIN.	Finish, Finished
F.J.	Floor Joist
FLR	Floor, Flooring
F.N.	Field Nail
FND	Foundation
F.O.	Face Of
F.O.C.	Face of Concrete
F.O.M.	Face of Masonry
F.O.S.	Face of Steel (Studs)
F.S.	Far Side
FT.	Feet
FTG	Footing
FUT.	Future
GA	Gauge
GAL	Galvanized
G.B.	Grade Beam
GB	Grade Beam
GD	Grade, Grading
GLB	Glued Laminated
G.T	Girder Truss
GUSS.	Gusset
HD	Hold Down
HDR	Header
HGR	Hanger
HORIZ	Horizontal
H.P.	High Point
HT.	Height
H.V.A.C	Heating/Ventilation/ Air Conditioning
IBC	International Building Code
I.D.	Inside Diameter
IN	Inch
INCL	Include
INFO	Information
INS	Insulated
INT.	Interior
JST	Joist
JT.	Joint
L	Length, Angle
LAM	Laminated
LB	Pound
LG	Long
L.L.	Live Load
L.L.H.	Long Leg Horizontal
L.L.V.	Long Leg Vertical
L.P.	Low Point
LVR	Louver
MAS	Masonry
MAX	Maximum
M.B.	Machine Bolt
MCJ	Masonry Control Joint
MECH	Mechanical
MED	Medium
MEZZ	Mezzanine
MFR	Manufacture, Manufacturer
MIN	Minimum
MISC	Miscellaneous
M.O.	Masonry Opening
MT.	Mount, Mounted, Mounting
MTL	Metal
N.	North
N.I.C.	Not In Contract
NO.	Number
NOM	Nominal
N.S.	Near Side
N.T.S.	Not To Scale
O.C.	On Center
O.D.	Outside Diameter
O.H.	Opposite Hand, Overhead
OPNG	Opening
P.A.F.	Powder Acuated Fasteners
PAR.	Parallel
P.C.C.	Precast Concrete
P.C.F.	Pounds per Cubic Foot
PENT.	Penetration
PEMB.	Pre-Engineered Metal Building
PL.	Plate, Property Line
PL	Plate
PLY.	Plywood
PNL.	Panel
P.S.F.	Pounds per Square Foot
P.S.I.	Pounds per Square Inch
P.T.	Pressure Treated
R.,RAD.	Radius
REF.	Reference
REINF.	Reinforcement
REQ.	Required
RET.	Return
REV.	Revision, Revised
RF.	Roof
RFT.	Rafters
RM.	Room
R.O.	Rough Opening
R.S.	Rough Sawn
R.T.	Roof Truss
S.	South
SCHED.	Schedule
SEC.	Section
SEP.	Separation
SHT.	Sheet
SIM.	Similar
SLRS	Seismic Lateral Resisting System
S.M.S.	Sheet Metal Screw
SPEC.	Specification(s)
SQ.	Square
S.S.	Stainless Steel
STD.	Standard
STIFF.	Stiffener
STL.	Steel
STRUCT	Structural
SUSP.	Suspended
SYM	Symmetrical
T&B	Top & Bottom
T&G	Tongue & Groove
T.C.	Top of Curb
THK	Thick, Thickness
T.N.	Toe Nail
T.O.B.	Top of Beam
T.O.C.	Top of Concrete
T.O.F.	Top of Footing
T.O.P.	Top of Parapet
T.O.S.	Top of Steel
T.O.W	Top of Wall
T.S.	Tube Steel
TYP.	Typical
U.N.O.	Unless Noted Otherwise
U.O.N.	Unless Otherwise Noted
V.B.	Vapor Barrier
VERT.	Vertical
W/	With
W.	West
WD.	Wood
W/O	Without
W.P.	Water Proof
W.PT.	Working Point
WT.	Weight
W.W.F.	Welded Wire Fabric
W.W.M.	Welded Wire Mesh

SHOP DRAWINGS/SUBMITTALS:

1. PRIOR TO FABRICATION SUBMIT AS A MINIMUM THE FOLLOWING SHOP SUBMITTALS TO THE ARCHITECT/ENGINEER FOR REVIEW AND COMMENT:
   a. CONCRETE MIX DESIGNS
   b. CONCRETE REINF. LAYOUT
   c. PRE-ENGINEERED BUILDING
2. STEEL REINFORCING LISTS AND QUANTITIES AND LENGTH OF ALL MATERIALS WILL BE THE RESPONSIBILITY OF THE CONTRACTOR TO ASSURE COMPLIANCE WITH THE PLANS. THE ENGINEER WILL NOT REVIEW THESE ITEMS.
3. REVIEW OF SHOP DRAWINGS BY THE STRUCTURAL ENGINEER IS FOR THE PURPOSE OF GENERAL COMPLIANCE WITH THE CONTRACT DOCUMENTS. ALL ERRORS IN DETAILING, FABRICATION, AND CORRECT FITTING OF ALL STRUCTURAL MEMBERS INCLUDING COORDINATION WITH OTHER TRADES ARE THE RESPONSIBILITY OF THE CONTRACTOR. SHOP DRAWING SUBMITTALS PROCESSED BY THE ENGINEER DO NOT CONSTITUTE CHANGE ORDERS. ANY PROPOSED CHANGES MUST BE SUBMITTED IN A LETTER OR DETAIL TO THE ARCHITECT/ENGINEER FOR APPROVAL.

COMPONENTS & CLADDING NEW DESIGN WIND PRESSURE

	ZONE	EFFECTIVE WIND AREA	(+) PRESSURE (PSF)	(-) PRESSURE (PSF)
ROOF	1	10	21	-33
	1	20	19	-32
	1	50	17	-31
	1	100	15	-30
	2	10	21	-58
	2	20	19	-53
	2	50	17	-47
	2	100	15	-42
	3	10	21	-85
	3	20	19	-79
	3	50	17	-72
	3	100	15	-67
WALLS	4	10	36	-39
	4	20	35	-38
	4	50	33	-36
	4	100	31	-34
	4	500	27	-30
	5	10	36	-48
	5	20	35	-45
	5	50	33	-41
	5	100	31	-38
	5	500	27	-30

COMPONENTS & CLADDING NEW DESIGN WIND PRESSURE

	ZONE	EFFECTIVE WIND AREA	(-) PRESSURE (PSF)
ROOF OVERHANG	2	10	-68
	2	20	-68
	2	50	-68
	2	100	-68
	3	10	-114
	3	20	-103
	3	50	-88
	3	100	-77

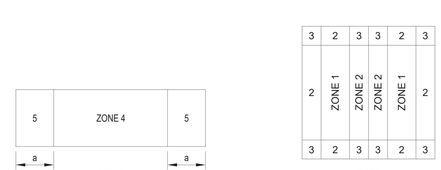

COMPONENTS & CLADDING PRESSURE (PSF)

SYM	DESCRIPTION	DATE	APPR

NAVFAC

SEAL

kaydos-daniels engineers, plic
718 w lane st
raleigh nc 27603
nc firm license #P-0279
T 919 828 4966
F 919 828 4967
www.kaydos-daniels.com
A/E INFO

APPROVED
FOR COMMANDER NAVFAC 5/13/2026
ACTIVITY

SATISFACTORY TO

DES	LGG	DRW	HON	CHK	LGG
PM/DM	SGL/MDM				
BRANCH MANAGER	CWJ				
CHIEF ENG/ARCH	JWJ				
FIRE PROTECTION	HPN				

DEPARTMENT OF THE NAVY
NAVAL FACILITIES ENGINEERING SYSTEMS COMMAND – MIDATLANTIC
1PT MARINE CORPS BASE
MARINE CORPS
NAVAL FACILITIES ENGINEERING COMMAND
NAVAL STATION - NORFOLK, VA
CAMP LEJEUNE, NC

P-1550 SOF MARINE RAIDER COMPANY / TEAM FACILITIES

COVER SHEET

SCALE: AS INDICATED
EPROJECT NO.: 1701820
CONSTR. CONTR. NO.

A3
CO STG

NAVFAC DRAWING NO.
12903749
SHEET 7 OF 122
S-001

FINAL SUBMITTAL

DRAWFORM REVISION: 25 AUGUST 2020

File C:\Users\henry.KAYDOS-DANIELS\Documents\P1550 Structure 2023_A3_honewell.rvt
Path:
Date: 5/6/2026 3:38:59 PM

STRUCTURAL NOTES

1.0 GENERAL NOTES:

1.0.1 THE PROJECT SPECIFICATIONS (A BOOK OF SPECIFICATIONS) ARE A PART OF THE CONTRACT DOCUMENTS. IF THERE IS A DISCREPANCY FOUND BETWEEN THE SPECIFICATIONS AND THE DRAWINGS, SPECIFICATIONS TAKE PRECEDENCE, HOWEVER THE MATTER WILL BE PROMPTLY SUBMITTED TO THE CONTRACTING OFFICER FOR CLARIFICATION. ANY WORK PERFORMED BY THE CONTRACTOR WITHOUT SUCH A CLARIFICATION WILL BE AT CONTRACTOR'S OWN RISK AND EXPENSE.

1.0.2 EXAMINE THE STRUCTURAL DRAWINGS AND THE SPECIFICATIONS AND NOTIFY THE ENGINEER & CONTRACTING OFFICER OF ANY DISCREPANCIES IN ELEVATIONS, DIMENSIONS, AND SITE CONDITIONS INCLUDING ERRORS BEFORE PROCEEDING WITH ANY WORK. OMISSIONS AND CONFLICTS BETWEEN THE VARIOUS ELEMENTS OF THE DRAWINGS (AND SPECIFICATIONS) WILL BE RESOLVED IN WRITING WITH THE ENGINEER/ARCHITECT & CONTRACTING OFFICER PRIOR TO START OF WORK.

1.0.3 THE DRAWINGS (AND SPECIFICATIONS) REPRESENT THE COMPLETED STRUCTURE. THEY DO NOT INDICATE THE METHOD OF CONSTRUCTION. PROVIDE ALL MEASURES AND MEANS NECESSARY TO PROTECT PERSONS AND THE STRUCTURE DURING CONSTRUCTION. SUCH MEASURES WILL INCLUDE, BUT NOT BE LIMITED TO BRACING, SHORING, ETC. OBSERVATION VISITS BY THE ARCHITECT OR ENGINEER DOES NOT INCLUDE REVIEW OF THESE MEASURES.

1.0.4 TYPICAL DETAILS WILL BE USED WHENEVER APPLICABLE WHETHER SPECIFICALLY REFERENCED OR NOT.

1.0.5 DRAWINGS WILL NOT BE SCALED FOR CONSTRUCTION PURPOSES.

1.0.6 NO PIPES OR DUCTS WILL BE PLACED IN STRUCTURAL MEMBERS UNLESS SPECIFICALLY DETAILED OR APPROVED BY THE ENGINEER & CONTRACTING OFFICER.

1.0.7 REFER TO ARCHITECTURAL DRAWINGS FOR THE FOLLOWING:

A. SIZE AND LOCATION OF ALL DOOR AND WINDOW OPENINGS, UNLESS OTHERWISE NOTED.
B. SIZE AND LOCATION OF INTERIOR AND EXTERIOR NON-BEARING PARTITIONS.
C. SIZE AND LOCATION OF CURBS, FLOOR DRAINS, SLOPES, DEPRESSED AREAS, CHANGES IN LEVEL, RAMPS, CHAMFERS, GROOVES, INSERTS, ETC., EXCEPT AS SHOWN.
D. SIZE AND LOCATION OF FLOOR AND ROOF OPENINGS, EXCEPT AS SHOWN.
E. FLOOR AND ROOF FINISHES.
F. STAIR FRAMING AND DETAILS, EXCEPT AS SHOWN.
G. DIMENSIONS NOT SHOWN ON STRUCTURAL DRAWINGS.

1.0.8 REFER TO MECHANICAL, PLUMBING, AND ELECTRICAL DRAWINGS FOR THE FOLLOWING:

A. PIPE RUNS, SLEEVES, HANGERS, TRENCHES, SLAB OPENINGS, ETC., EXCEPT AS SHOWN OR NOTED.
B. ELECTRICAL CONDUITS, BOXES, OUTLETS.
C. CONCRETE INSERTS FOR ELECTRICAL, MECHANICAL AND PLUMBING FIXTURES.
D. SIZE AND LOCATION OF MACHINE AND EQUIPMENT BASES, ANCHOR BOLTS, ETC.

1.0.9 ASTM REFERENCES ARE FROM THE LATEST ISSUE AND LATEST REVISION, UNLESS OTHERWISE NOTED.

1.0.10 INVESTIGATE THE SITE DURING CLEARING AND EXCAVATION FOR UNSUITABLE CONDITIONS, UNCONSOLIDATED AND UNDOCUMENTED FILLS, BURIED STRUCTURES, UTILITIES, ETC., AND IMMEDIATELY NOTIFY THE ARCHITECT/ENGINEER & CONTRACTING OFFICER OF ANY SITE CONDITIONS NOT REFLECTED ON THE DRAWINGS OR DIFFERENT FROM MAXIMUM OR MINIMUM DIMENSIONS INDICATED, INCLUDING CONFLICT IN GRADES, ADVERSE SOIL CONDITIONS, GROUNDWATER PRESENT, DEEPENED FOOTINGS, UNCOVERED AND UNEXPECTED UTILITY LINES, ETC.

1.0.11 CONSTRUCTION MATERIALS, IF PLACED ON STRUCTURAL MEMBERS, WILL BE SPREAD OUT SUCH THAT THE LOADING DOES NOT EXCEED THE DESIGN LIVE LOADS. PROVIDE SHORING AND BRACING WHERE CONSTRUCTION LOADING EXCEEDS THE DESIGN STRENGTH OF THE STRUCTURAL MEMBERS OR THE STRUCTURAL STRENGTH HAS NOT BEEN ATTAINED OR THE STRUCTURE IS NOT COMPLETE.

1.0.12 DETERMINE THE LOCATION OF UTILITY SERVICES IN AREAS TO BE EXCAVATED BEFORE BEGINNING EXCAVATION. EXERCISE EXTREME CAUTION IN EXCAVATING AND TRENCHING. DAMAGE CAUSED AS A RESULT OF FAILING TO EXACTLY LOCATE AND PRESERVE ALL EXISTING UNDERGROUND UTILITIES IS THE RESPONSIBILITY OF THE CONTRACTOR.

1.0.13 THE CAD DRAWING FILES ARE THE PROPERTY OF NAVFAC

1.0.14 STRUCTURAL DRAWINGS TO BE USED IN CONJUNCTION WITH ARCHITECTURAL DRAWINGS BY: MBF ARCHITECTS

DEFERRED SUBMITTALS

1. THE DEFERRED SUBMITTAL ITEMS SHALL NOT BE INSTALLED UNTIL THEIR DESIGN AND SUBMITTAL DOCUMENTS HAVE BEEN REVIEWED BY THE ARCHITECT OR ENGINEER OF RECORD AND THAT THEY HAVE BEEN FOUND TO BE IN GENERAL CONFORMANCE WITH THE DESIGN OF THE BUILDING.
   A. PRE-ENGINEERED METAL BUILDING SHOP DRAWINGS & COLUMN BASE REACTIONS
   B. LADDERS, GUARDRAILS, HANDRAILS AND THEIR COMPONENTS
   C. SUPPORT ANCHORAGE OF MECHANICAL, ELECTRICAL AND PLUMBING EQUIPMENT AND COMPONENTS
   D. SLAB ON GRADE CONTROL JOINT PLAN (PE SEAL NOT REQUIRED FOR THIS ITEM)
   E. COLD-FORMED FRAMING / METAL STUD CALCULATIONS AND SHOP DRAWINGS INCLUDING LAYOUT, TYPICAL CONSTRUCTION DETAILS, AND CONNECTIONS (ITEMS SHOWN IN PLANS ARE MINIMUM SIZES REQUIRED)
2. THE ABOVE LISTED SUBMITTAL DOCUMENTS SHALL BE STAMPED AND SIGNED BY A REGISTERED PROFESSIONAL ENGINEER, U.N.O.

2.0 FOUNDATION:

2.0.1 FOUNDATION DESIGN IS BASED ON A MAXIMUM ALLOWABLE SOIL BEARING PRESSURE OF 1,500 PSF BASED ON THE GEOTECHNICAL ENGINEERING REPORT PREPARED BY ECS SOUTHEAST, LLP DATED MAY 11, 2023 AND GEOTECHNICAL DESIGN NARRATIVE DATED AUGUST 7, 2023.

2.0.2 FOOTING DEPTHS SHOWN ARE A MINIMUM AND MAY REQUIRE DEEPENING BASED ON SITE CONDITIONS.

2.0.3 FOOTINGS WILL BEAR ON FIRM UNDISTURBED OR COMPACTED SOIL. MINIMUM FOOTING DIMENSIONS AND EMBEDMENTS WILL BE AS FOLLOWS:

MIN. FOOTING SIZES			
	MIN. FTG. WIDTH	MIN. FTG. THICKNESS	MIN. EMBEDMENT
CONT. EXT. FTG.	1'-6"	12"	12"
CONT. INT. FTG.	1'-6"	12"	12"
PAD (SPREAD) FTG.	2'-6"	12"	12"

2.0.4 SUBMIT COMPACTION TEST REPORTS FOR ALL FILL BY A QUALIFIED TESTING LAB TO ARCHITECT/ENGINEER & CONTRACTING OFFICER BEFORE FOUNDATION PLACEMENT. ALL LOOSE SOIL AND FILL DIRT WILL BE COMPACTED TO A MINIMUM OF 95% MAXIMUM DENSITY.

2.0.5 THE FOOTING EXCAVATIONS WILL BE KEPT FREE FROM LOOSE MATERIAL AND STANDING WATER AND WILL BE NEAT AND TRUE TO LINE BEFORE ANY CONCRETE IS PLACED.

2.0.6 ALL ABANDONED FOOTINGS, UTILITIES, ETC. THAT INTERFERE WITH NEW CONSTRUCTION WILL BE REMOVED.

2.0.7 WALL FOOTINGS ARE CONTINUOUS POURED CONCRETE WITH CONTINUOUS REINFORCING PLACED 3" CLEAR OF BOTTOM AND SIDES.

2.0.8 UNLESS OTHERWISE NOTED, WALL FOOTINGS ARE CENTERED UNDER WALLS AND COLUMN FOOTINGS UNDER COLUMNS.

2.0.9 PROVIDE FOR DESIGN AND INSTALLATION OF ALL CRIBBING, SHEATHING AND SHORING REQUIRED TO SAFELY RETAIN ALL GRADES.

2.0.10 PROVIDE FOR DE-WATERING OF EXCAVATIONS FROM SURFACE, GROUND, AND OR SEEPAGE WATER.

3.0 CONCRETE:

3.0.1 CEMENT WILL CONFORM TO ASTM C150, TYPE II / V

3.0.2 AGGREGATES FOR NORMAL WEIGHT CONCRETE WILL CONFORM TO ASTM C33, 1 1/2" MAXIMUM SIZE.

3.0.3 ADMIXTURES MAY NOT BE USED WITHOUT PRIOR APPROVAL OF THE ENGINEER & CONTRACTING OFFICER. ADMIXTURES USED TO INCREASE THE WORKABILITY OF THE CONCRETE WILL NOT REDUCE THE STRENGTH OF CONCRETE. FLY ASH (POZZOLAN) IF PERMITED BY SPECIFICATIONS WILL NOT EXCEED 25% FOR SLAB ON GRADE AND 25% FOR ALL OTHER CONCRETE.

3.0.4 THE MIX DESIGN, INCLUDING PROPORTIONS OF MATERIALS FOR A ONE YARD BATCH, WILL BE SUBMITTED TO THE ENGINEER OF RECORD & CONTRACTING OFFICER FOR REVIEW PRIOR TO ORDERING CONCRETE.

3.0.5 READY-MIX CONCRETE WILL BE MIXED AND DELIVERED IN ACCORDANCE WITH ASTM C94.

3.0.6 ALL REINFORCING BARS AND INSERTS WILL BE SECURED IN PLACE PRIOR TO PLACING CONCRETE.

3.0.7 CONDUITS EMBEDDED HORIZONTALY IN THE SLAB WILL HAVE AN OUTSIDE DIAMETER NO GREATER THAN 1/3 THE THICKNESS OF THE SLAB. CONDUIT WILL NOT BE EMBEDDED IN A SLAB THAT IS LESS THAN 3 1/2" THICK. EXCEPT FOR LOCAL OFFSETS, MIN. CLEAR DISTANCE BETWEEN CONDUITS WILL BE 6".

3.0.8 NON-STRUCTURAL STEEL MEMBERS EMBEDDED IN CONCRETE WILL BE GALVANIZED OR PAINTED. ALL DAMAGED GALVANIZED AREAS WILL BE REPAIRED PRIOR TO EMBEDMENT.

3.0.9 ALL CONCRETE WILL HAVE A MAXIMUM DRY DENSITY OF 150 pcf.

3.0.10 MINIMUM CONCRETE COMPRESSIVE STRENGTHS AT 28 DAYS.

	MIN. f'c
SLAB ON GRADE	4,000 psi
FOOTINGS & ALL OTHER CONCRETE	3,000 psi

3.0.11 PROVIDE CONSTRUCTION OR CONTROL JOINTS IN SLAB ON GRADE AS SHOWN ON PLANS UNLESS SPECIFIED OTHERWISE. LOCATION OF JOINTS NOT SPECIFICALLY INDICATED WILL BE REVIEWED BY THE STRUCTURAL ENGINEER & CONTRACTING OFFICER PRIOR TO PLACING REINFORCING STEEL.

3.0.12 DRY PACK WILL BE ONE PART CEMENT AND 2 3/4 PARTS SAND WITH JUST ENOUGH WATER TO HYDRATE CEMENT AND FORM A BALL SHOWING MOISTURE ON THE SURFACE WHEN SQUEEZED. IT WILL BE RAMMED IN TIGHT TO MAXIMUM DENSITY ATTAINABLE, AND WILL BE FROM A PRODUCT THAT SPECIFIES A MINIMUM STRENGTH AT 28 DAYS OF 5000 psi.

3.0.13 NON-SHRINK GROUT WILL BE FROM A PRODUCT THAT SPECIFIES A MINIMUM COMPRESSIVE STRENGTH AT 28 DAYS OF 7,000 psi PER ASTM C109. GROUTING OF BASE PLATES PRIOR TO PLUMBING OF COLUMN IS NOT PERMITTED.

3.0.14 PROJECTING CORNERS OF SLABS, BEAMS, WALLS, COLUMNS, ETC., WILL BE FORMED WITH A 3/4" CHAMFER OR TOOLED EDGE, UNLESS OTHERWISE NOTED.

3.0.15 ALL CONCRETE WHICH DURING THE LIFE OF THE STRUCTURE WILL BE SUBJECT TO FREEZING TEMPERATURES WHILE WET, WILL HAVE A WATER CEMENT RATIO NOT EXCEEDING 0.45 BY WEIGHT AND WILL CONTAIN ENTRAINED AIR PER ACI 613. SUCH CONCRETE WILL INCLUDE EXTERIOR SLABS, PERIMETER FOUNDATIONS, EXTERIOR CURBS, ETC.

3.1 REINFORCING STEEL:

3.1.1 DETAILING, FABRICATION AND ERECTION OF REINFORCING BARS WILL BE IN ACCORDANCE WITH ACI MANUAL OF STANDARD PRACTICE FOR DETAILING REINFORCED CONCRETE STRUCTURES, ACI 315-LATEST ADOPTED EDITION.

3.1.2 ALL REINFORCING WILL BE ADEQUATELY SUPPORTED TO PREVENT DISPLACEMENT BY CONCRETE PLACEMENT OR WORKERS.

3.1.3 ALL REINFORCING BARS EXCEPT BARS TO BE WELDED WILL CONFORM TO THE "STANDARD SPECIFICATION FOR DEFORMED BILLET STEEL BARS FOR CONCRETE REINFORCEMENT", ASTM A615 GRADE 60. BARS TO BE WELDED WILL CONFORM TO ASTM A706.

3.1.4 WELDING OF REINFORCING BARS TO BE IN ACCORDANCE WITH "STRUCTURAL WELDING CODE-REINFORCING STEEL", AWS D1.4. REINFORCING STEEL TO BE WELDED WILL HAVE A MAXIMUM CARBON EQUIVALENT (CE) OF 0.75. SPECIAL INSPECTION IS REQUIRED. TESTING IS REQUIRED FOR ALL WELDS THICKER THAN 5/16".

3.1.5 WHERE CONTINUOUS BARS ARE CALLED OUT IN FOOTINGS, SPLICES MAY BE USED. WHERE BARS ARE SHOWN SPLICED, THEY MAY RUN CONTINUOUS AT CONTRACTOR'S OPTION.

3.1.6 ALL REINFORCING BAR BENDS WILL BE MADE COLD.

3.1.7 UNLESS OTHERWISE SHOWN, WALL VERTICAL REINFORCING WILL BE POSITIONED AT THE CENTER OF THE WALL.

3.1.8 DOWELS BETWEEN FOOTINGS AND WALLS WILL BE THE SAME GRADE, SIZE, AND SPACING AS VERTICAL REINFORCING.

3.1.9 ALL REINFORCING BARS WILL BE PROVIDED WITH THE FOLLOWING CONCRETE COVER:

CONCRETE CAST AGAINST AND PERMANENTLY EXPOSED TO EARTH:.....3"

CONCRETE EXPOSED TO EARTH OR WEATHER:
NO.6 THROUGH NO.18 BAR ..... 2"
NO.5 BAR, W31 OR D31 WIRE, AND SMALLER ..... 1 1/2"

CONCRETE NOT EXPOSED TO WEATHER OR IN CONTACT WITH GROUND:
SLABS, WALLS, JOISTS:
NO.14 AND NO.18 BAR ..... 1 1/2"
NO.11 BAR AND SMALLER ..... 3/4"

3.1.10 SLAB ON GRADE REINFORCEMENT WILL BE POSITIONED AT MID-DEPTH.

3.1.11 SHOP DRAWINGS FOR SIZE AND LAYOUT OF REINFORCING REBARS ARE REQUIRED WHEN NOTED IN THE LIST OF REQUIRED SHOP DRAWINGS.

3.2 ADHESIVE, ANCHOR RODS AND REBAR IN HARDENED CONCRETE (EPOXY ANCHORS):

3.2.1 ALL ADHESIVE ANCHOR INSTALLATIONS WILL COMPLY WITH MANUFACTURER'S WRITTEN INSTRUCTIONS AND SPECIFICATIONS, INCLUDING ANY ICC-ES REPORTS.

3.2.2 DUST WILL BE BLOWN FROM THE HOLE WITH COMPRESSED AIR TO ENSURE PROPER ANCHOR SEATING DEPTH AND TO PROVIDE A CLEAN BONDING SURFACE. ADDITIONALLY, THE HOLE WILL BE BRUSHED WITH A NYLON BRUSH THEN BLOWN AGAIN WITH COMPRESSED AIR.

3.2.3 ADHESIVE WILL ONLY BE APPLIED TO DRY SURFACES.

3.2.4 BASE MATERIAL TEMPERATURE MUST BE 40°F OR ABOVE AT TIME OF INSTALLATION. FOR BEST RESULTS, MATERIAL SHOULD BE 70°F-80°F.

3.2.5 WHEN INSTALLING EPOXY ANCHORS INTO MASONRY, ANCHORS WILL BE INSTALLED IN SOLID GROUTED CELLS ONLY.

3.2.6 CHEMICAL ANCHOR SYSTEMS:

A. CONCRETE: USE ONLY ADHESIVE ANCHOR SYSTEMS THAT HAVE BEEN ISSUED AN ICC-ES REPORT IN ACCORDANCE WITH PROVISIONS OF OF ICC-ES AC308. ANCHOR SYSTEM SHOULD BE APPROVED FOR USE IN CRACKED CONCRETE AND SEISMIC DESIGN CATEGORIES A-F PER SECTION 2.0 OF THE ICC-ES EVALUATION SERVICES REPORT. ANCHOR SYSTEM WILL BE INSTALLED PER THE REQUIREMENTS OF THE ICC-ES EVALUATION SERVICES REPORT FOR THE SPECIFIC ANCHOR, AND AS REQUIRED BY THE MANUFACTURER.

B. GROUT-FILLED MASONRY UNITS: USE ONLY ADHESIVE ANCHOR SYSTEMS THAT HAVE BEEN ISSUED AN ICC-ES REPORT IN ACCORDANCE WITH PROVISIONS OF ISS-ES AC58. ANCHOR SYSTEMS WILL BE INSTALLED PER REQUIREMENTS OF ICC-ES EVALUATION SERVICES REPORT FOR THE SPECIFIC ANCHOR, AND AS REQUIRED BY THE MANUFACTURER.

3.2.7 ANCHOR RODS:

ALL RODS WILL BE ASTM A36 THREADED RODS WITH ASTM A563 GRADE A NUTS AND ANSI B18.22.1 TYPE A WASHERS, UNLESS OTHERWISE NOTED. ANCHORS DESIGNATED AS ASTM A193 GRADE B7 THREADED RODS WILL USE ASTM A563 GRADE DH HEAVY HEX NUTS AND ASTM F436 WASHERS.

3.2.8 REINFORCEMENT BARS: ASTM A615 GRADE 60 STEEL.

3.2.9 REMOVE GREASE, OIL, RUST AND ANY OTHER LAITANCE FROM RODS AND DOWELS PRIOR TO INSTALLATION.

3.2.10 SPECIAL INSPECTION REQUIREMENTS WILL BE DICTATED BY SECTION 4.0 OF THE ICC-ES EVALUATION SERVICES REPORT. ANY SPECIAL INSPECTION WILL VERIFY ANCHOR TYPE, ANCHOR DIMENSIONS, CONCRETE TYPE, CONCRETE COMPRESSIVE STRENGTH, HOLE DIMENSIONS, ANCHOR SPACINGS, EDGE DISTANCES, SLAB THICKNESS, ANCHOR EMBEDMENT, AND TIGHTENING TORQUE.

3.2.11 CONTRACTOR'S OPTION TO USE OTHER MANUFACTURER'S PRODUCTS ONLY WITH PRIOR APPROVAL OF THE ENGINEER & CONTRACTING OFFICER. SUBMIT MANUFACTURER'S LITERATURE AND PRODUCT INSTALLATION FOR REVIEW.

3.3 MECHANICAL ANCHORS IN HARDENED CONCRETE AND MASONRY (EXPANSION ANCHORS):

3.3.1 ANCHORS TO BE INSTALLED IN HOLES DRILLED WITH CARBIDE-TIPPED DRILL BITS. ANCHORS TO BE INSTALLED PER MANUFACTURER'S WRITTEN INSTRUCTIONS.

3.3.2 WHEN INSTALLING DRILLED EXPANSION ANCHORS IN EXISTING REINFORCED CONCRETE, USE CARE AND CAUTION TO AVOID CUTTING OR DAMAGING THE EXISTING REINFORCEMENT.

3.3.3 MAINTAIN A MINIMUM CLEARANCE OF 25 mm[1"] BETWEEN THE REINFORCEMENT AND THE DRILLED EXPANSION ANCHORS. EXPANSION ANCHORS WILL NOT BE USED AT CONCRETE CURBS.

3.3.4 EXPANSION ANCHOR SYSTEMS:

A. CONCRETE: USE ONLY EXPANSION ANCHOR SYSTEMS THAT HAVE BEEN ISSUED AN ICC-ES REPORT IN ACCORDANCE WITH THE PROVISIONS OF ICC-ES AC193. ANCHOR SYSTEMS SHOULD BE APPROVED FOR USE WITH CRACKED CONCRETE AND SEISMIC DESIGN CATEGORIES A-F PER SECTION 2.0 OF THE ICC EVALUATIONS SERVICES REPORT. ANCHOR SYSTEM WILL BE INSTALLED PER THE REQUIREMENTS OF THE ICC-ES EVALUATION SERVICES REPORT FOR THE SPECIFIC ANCHOR, AND AS REQUIRED BY THE MANUFACTURER.

B. MASONRY: USE ONLY EXPANSION ANCHOR SYSTEMS THAT HAVE BEEN ISSUED AN ICC-ES REPORT IN ACCORDANCE WITH THE PROVISIONS OF ICC-ES AC01. ANCHOR SYSTEMS SHOULD BE APPROVED FOR SEISMIC USE DETAILED IN THE CONDITIONS OF USE LISTED IN THE ICC-ES EVALUATION SERVICES REPORT. ANCHOR SYSTEM WILL BE INSTALLED PER THE REQUIREMENTS OF THE ICC-ES EVALUATION SERVICES REPORT FOR THE SPECIFIC ANCHOR, AND AS REQUIRED BY THE MANUFACTURER.

3.3.5 UNDERCUT ANCHOR SYSTEMS:

CONCRETE: USE ONLY UNDERCUT ANCHOR SYSTEMS THAT HAVE BEEN ISSUED AN ICC-ES REPORT IN ACCORDANCE WITH THE PROVISIONS OF ICC-ES AC193. ANCHOR SYSTEMS SHOULD BE APPROVED FOR USE IN CRACKED CONCRETE AND SEISMIC DESIGN CATEGORIES A-F PER SECTION 2.0 OF THE ICC EVALUATIONS SERVICES REPORT. ANCHOR SYSTEM WILL BE INSTALLED PER THE REQUIREMENTS OF THE ICC-ES EVALUATION SERVICES REPORT FOR SPECIFIC ANCHOR, AND AS REQUIRED BY THE MANUFACTURER.

3.3.6 WHERE THE MANUFACTURER'S INSTALLATION INSTRUCTIONS OR APPLICABLE ICC-ES EVALUATION SERVICES REPORT CALL FOR THE APPLICATION OF AN INSTALLATION TORQUE, THE SPECIFIED TORQUE WILL BE APPLIED WITH CALIBRATED TORQUE WRENCH. THE SPECIFIED INSTALLATION TORQUE WILL NOT BE EXCEEDED.

3.3.7 ANCHORS ARE TYPICALLY AVAILABLE IN ELECTRO-GALVANIZED CARBON STEEL, HOT DIPPED GALVANIZED CARBON STEEL, AND STAINLESS STEEL. USE OF ELECTRO-GALVANIZED CARBON STEEL ANCHORS IS TYPICALLY LIMITED TO DRY, INTERIOR LOCATIONS, UNLESS OTHERWISE NOTED. STAINLESS STEEL OR HOT-DIPPED GALVANIZED ANCHORS ARE GENERALLY SUITABLE FOR APPLICATIONS EXPOSED TO EXTERIOR WEATHER CONDITIONS. FINAL AUTHORITY ON TYPE OF ANCHOR COATING UTILIZED RESTS WITH THE STRUCTURAL ENGINEER OF RECORD & CONTRACTING OFFICER AND MUST BE APPROVED BY SUCH.

3.3.8 EXPANSION ANCHORS FOR NON-VIBRATION ISOLATED MECHANICAL EQUIPMENT RATED OVER 10HP ARE NOT PERMITTED BY ASCE 7-10 SECTION 13.6.5.5. ANCHORS INSTALLED IN OVERHEAD CONDITIONS FOR NON-VIBRATION ISOLATED EQUIPMENT WITH RECIPROCATING OR ROTATING MECHANISMS WILL BE UNDERCUT ANCHORS.

3.3.9 THE SPECIAL INSPECTOR WILL BE ON THE JOBSITE CONTINUOUSLY DURING ANCHOR INSTALLATIONS, UNLESS OTHERWISE NOTED IN ICC-ES ESR, TO VERIFY ANCHOR TYPE, ANCHOR DIMENSIONS, CONCRETE TYPE, CONCRETE COMPRESSIVE STRENGTH, HOLE DIMENSIONS ANCHOR SPACINGS, EDGE DISTANCES, SLAB THICKNESS, ANCHOR EMBEDMENT, AND TIGHTENING TORQUE.

SYM	DESCRIPTION	DATE	APPR

NAVFAC

NORTH CAROLINA PROFESSIONAL SEAL 032586 08 MAY 2026 ENGINEER LUCAS G. A. GELB

SEAL

kaydos-daniels engineers, pllc
718 w lane st
raleigh nc 27603
nc firm license #P-0279
T 919 828 4966
F 919 828 4967
www.kaydos-daniels.com

A/E INFO

APPROVED
DocuSigned by:
FOR COMMANDER NAVFAC 5/13/2026
ACTIVITY

SATISFACTORY TO

DES	LGG	DRW	HON	CHK	LGG

PM/DM SGL/MDM
BRANCH MANAGER CWJ
CHIEF ENG/ARCH JWJ
FIRE PROTECTION HPN

DEPARTMENT OF THE NAVY
NAVAL FACILITIES ENGINEERING SYSTEMS COMMAND ~ MIDATLANTIC
NAVAL FACILITIES ENGINEERING COMMAND
NAVAL STATION - NORFOLK, VA.
1ST MARINE EXPEDITIONARY BRIGADE
MARINE CORPS BASE
CAMP LEJEUNE, NC
P-1550 SOF MARINE RAIDER COMPANY / TEAM FACILITIES
STRUCTURAL NOTES

SCALE: AS INDICATED
EPROJECT NO.: 1701820
CONSTR. CONTR. NO.

A3
CO STG

NAVFAC DRAWING NO.
12903750
SHEET 8 OF 121
S-002

FINAL SUBMITTAL

DRAWFORM REVISION: 25 AUGUST 2020

File Path: C:\Users\henry.KAYDOS-DANIELS\Documents\P1550 Structure 2023_A3_honewell.rvt
Date: 5/6/2026 3:38:59 PM

STRUCTURAL NOTES

3.4 POWDER ACTUATED FASTENERS IN HARDENED CONCRETE, MASONRY, AND STEEL (SHOT PINS):

3.4.1 POWDER ACTUATED FASTENING SYSTEMS:

A. CONCRETE: FOR GENERAL CONCRETE AND LIGHTWEIGHT CONCRETE: POWDER ACTUATED FASTENING SYSTEMS WILL BE INSTALLED PER REQUIREMENTS OF THE ICC-ES EVALUATION SERVICES REPORT FOR THE SPECIFIC FASTENER, AND AS REQUIRED BY THE MANUFACTURER.

B. MASONRY: POWDER ACTUATED FASTENING SYSTEMS WILL BE INSTALLED PER THE REQUIREMENTS OF THE ICC-ES EVALUATION SERVICES REPORT FOR SPECIFIC FASTENER, AND AS REQUIRED BY THE MANUFACTURER.

C. STEEL: POWDER ACTUATED FASTENING SYSTEMS WILL BE INSTALLED PER THE REQUIREMENTS OF THE ICC-ES EVALUATION SERVICES REPORT FOR THE SPECIFIC FASTENER, AND AS REQUIRED BY THE MANUFACTURER.

3.4.2 WHEN INSTALLING POWDER ACTUATED FASTENERS IN EXISTING NON-PRESTRESSED REINFORCED CONCRETE, USE CARE AND CAUTION TO AVOID HITTING OR DAMAGE TO THE EXISTING REINFORCING BARS. MAINTAIN A MINIMUM CLEARANCE OF 1" BETWEEN THE REINFORCEMENT AND THE FASTENER.

3.4.3 POWDER ACTUATED FASTENERS ARE NOT PERMITTED BY ASCE 7-10 SECTION 13.4.5 FOR SEISMIC TENSION LOAD APPLICATIONS. POWDER ACTUATED FASTENERS WILL NOT BE USED TO CARRY SEISMIC TENSION LOADS (EXCEPT FOR VERTICAL SEISMIC LOAD PRODUCED BY SELF-WEIGHT OF THE COMPONENTS SUPPORTED) OR IN CRACKED CONCRETE UNLESS PRE-APPROVED FOR SUCH LOADING BY THE ENFORCEMENT AGENCY.

3.4.4 THE USE OF POWDER DRIVEN FASTENERS FOR TENSION LOADS IS LIMITED TO SUPPORT OF MINOR LOADS LIKE ACOUSTICAL CEILINGS, DUCTWORK CONDUITS, ETC.

3.4.5 ALLOWABLE TENSION LOADS WILL BE LIMITED TO LESS THAN 100 POUNDS.

3.4.6 POWDER ACTUATED FASTENERS MAY BE USED FOR SEISMIC SHEAR, WHEN THEY ARE SPECIFICALLY LISTED FOR SERVICE IN RESISTING LATERAL LOADS IN AREAS SUBJECT TO EARTHQUAKE.

3.4.7 MINIMUM EDGE DISTANCE FOR ACTUATED FASTENERS WILL BE THE LARGER OF THE VALUES GIVEN IN ASTM E 1190 OR THE APPLICABLE ICC-ES EVALUATION SERVICES REPORT.

4.0 MASONRY:

DESIGN STRENGTH: f'm = 1500 psi	
MASONRY COMPONENTS	STRENGTH @ 28 DAYS
CONCRETE MASONRY UNITS	1900 psi
GROUT	2000 psi
MORTAR (TYPE S)	1800 psi

4.0.1 ALL MASONRY WORK WILL CONFORM TO INTERNATIONAL BUILDING CODE (IBC), LATEST ADOPTED EDITION AS LISTED HEREIN.

4.0.2 CONCRETE MASONRY UNITS WILL BE MEDIUM WEIGHT UNITS IN ACCORDANCE WITH ASTM C90 WITH MAXIMUM LINEAR SHRINKAGE OF 0.065%.

4.0.3 CEMENT WILL BE AS SPECIFIED FOR CONCRETE.

4.0.4 MORTAR WILL CONFORM TO ASTM C270

EXCERPTS FROM ASTM C270:

TABLE 1 PROPORTION SPECIFICATION REQUIREMENTS

MORTAR	TYPE	PROPORTIONS BY VOLUME (CEMENTITIOUS MATERIALS): PORTLAND CEMENT OR BLENDED CEMENT	MORTAR CEMENT M	MORTAR CEMENT S	MORTAR CEMENT N	MASONRY CEMENT M	MASONRY CEMENT S	MASONRY CEMENT N	HYDRATED LIME OR LIME PUTTY	AGGREGATE RATIO (MEASURED IN DAMP, LOOSE CONDITIONS)
CEMENT-LIME	M	1	-	-	-	-	-	-	1/4	NOT LESS THAN 2 1/4 AND NOT MORE THAN 3 1/2 THE SUM OF SEPARATE VOLUMES OF CEMENTITIOUS MATERIALS
	S	1	-	-	-	-	-	-	OVER 1/4 TO 1/2	
	N	1	-	-	-	-	-	-	OVER 1/2 TO 1 1/4	
	O	1	-	-	-	-	-	-	OVER 1 1/4 TO 2 1/2	
MORTAR CEMENT	M	1	-	-	1	-	-	-	-	
	M	-	1	-	-	-	-	-	-	
	S	1/2	-	-	1	-	-	-	-	
	S	-	-	1	-	-	-	-	-	
	N	-	-	-	1	-	-	-	-	
	O	-	-	-	1	-	-	-	-	
	M	1	-	-	-	-	-	1	-	
	M	-	-	-	-	1	-	-	-	
	S	1/2	-	-	-	-	-	1	-	
	S	-	-	-	-	-	1	-	-	
	N	-	-	-	-	-	-	1	-	
	O	-	-	-	-	-	-	1	-	

TABLE 2 PROPERTY SPECIFICATION REQUIREMENTS[A]

MORTAR	TYPE	AVG. COMPRESSIVE STRENGTH AT 28 DAYS, MIN.	WATER RETENTION, MIN. %	AIR CONTENT, MAX. %[B]	AGGREGATE RATIO (MEASURED IN DAMP, LOOSE CONDITIONS)
CEMENT-LIME	M	2500 psi	75	12	
	S	1800 psi	75	12	
	N	750 psi	75	14[C]	
	O	350 psi	75	14[C]	
MORTAR CEMENT	M	2500 psi	75	12	NOT LESS THAN 2 1/4 AND NOT MORE THAN 3 1/2 THE SUM OF SEPARATE VOLUMES OF CEMENTITIOUS MATERIALS
	S	1800 psi	75	12	
	N	750 psi	75	14[C]	
	O	350 psi	75	14[C]	
MASONRY CEMENT	M	2500 psi	75	18	
	S	1800 psi	75	18	
	N	750 psi	75	20[D]	
	O	350 psi	75	20[D]	

[A] LABORATORY PREPARED MORTAR ONLY

[B] SEE NOTE

[C] WHEN STRUCTURAL REINFORCEMENT IS INCORPORATED IN CEMENT-LINE OR CEMENT MORTAR, THE MAX. AIR CONTENT WILL BE 12%.

[D] WHEN STRUCTURAL REINFORCEMENT IS INCORPORATED IN MASONRY OR CEMENT MORTAR, THE MAX. AIR CONTENT WILL BE 18%.

4.0.5 MORTAR JOINTS WILL BE STRAIGHT, CLEAN AND UNIFORM IN THICKNESS, AND WILL BE TOOLED AS SHOWN ON THE PLANS OR AS SPECIFIED (FLUSH JOINTS IF NO SPECIAL TREATMENT SPECIFIED). UNLESS OTHERWISE SPECIFIED OR DETAILED ON THE PLANS, HORIZONTAL AND VERTICAL MORTAR JOINTS WILL BE 3/8" THICK WITH FULL MORTAR COVERAGE ON THE FACE SHELL.

4.0.6 OVERHANGING MORTAR DROPPINGS AND ALL DEBRIS WILL BE REMOVED FROM ALL CELLS RECEIVING GROUT. FAILURE TO REMOVE DEBRIS WILL BE CAUSE FOR REJECTION OF WALL AND ALL REPAIR OR REWORK NECESSARY WILL BE ENTIRELY AT CONTRACTOR'S EXPENSE.

4.0.7 VERTICAL HEAD JOINTS WILL BE BUTTERED WELL FOR A THICKNESS EQUAL TO THE FACE SHELL OF THE BLOCK AND THESE JOINTS WILL BE SHOVED TIGHTLY SO THAT THE MORTAR BONDS WELL TO BOTH BLOCKS. IF IT IS NECESSARY TO MOVE A BLOCK SO AS TO OPEN A JOINT, THE BLOCK WILL BE REMOVED FROM THE WALL, CLEANED AND SET IN FRESH MORTAR

4.0.8 GROUT WILL CONFORM TO ASTM C476.

EXCERPTS FROM ASTM C476:

TABLE 2103.12
GROUT PROPORTIONS BY VOLUME FOR MASONRY CONSTRUCTION

TYPE	PARTS BY VOLUME OF PORTLAND CEMENT OR BLENDED CEMENT	PARTS BY VOLUME OF HYDRATED LIME OR LIME PUTTY	AGGREGATE, MEASURED IN A DAMP, LOOSE CONDITION: FINE	AGGREGATE, MEASURED IN A DAMP, LOOSE CONDITION: COARSE
FINE GROUT	1	0-1/10	2 1/4-3 TIMES THE SUM OF THE VOLUMES OF THE CEMENTITIOUS MATERIALS	-
COARSE GROUT	1	0-1/10	2 1/4-3 TIMES THE SUM OF THE VOLUMES OF THE CEMENTITIOUS MATERIALS	1-2 TIMES THE SUM OF THE VOLUMES OF THE CEMENTITIOUS MATERIALS

4.2.2 SPECIFIED COMPRESSIVE STRENGTH- PROPORTIONS ESTABLISHED BY 28-DAY COMPRESSIVE STRENGTH TESTS IN ACCORDANCE WITH TEST METHOD C 1019 THAT OBTAIN THE SPECIFIED COMPRESSIVE STRENGTH. THE GROUT WILL BE MIXED TO A SLUMP OF 8 in. TO 11 in. AS DETERMNINED BY TEST METHOD C 143/C 143M AND WILL HAVE A MINIMUM COMPRESSIVE STRENGTH OF 2000 psi AT 28 DAYS.

4.0.9 ALL CELLS WILL BE FILLED SOLID WITH GROUT UNLESS OTHERWISE NOTED.

4.0.10 ALL GROUT WILL BE CONSOLIDATED WITH A MECHANICAL VIBRATOR. MINIMUM 4000 rpm, 3/4" MAXIMUM HEAD. PROVIDE INSPECTION AND CLEANOUT HOLES AT THE BASE OF GROUTED CELLS FOR ALL LIFTS GREATER THAN 5'-0".

4.0.11 WHEN GROUTING IS STOPPED FOR ONE HOUR OR LONGER, HORIZONTAL CONSTRUCTION JOINTS WILL BE FORMED BY STOPPING THE GROUT POUR 1 1/2" BELOW TOP OF THE UPPERMOST UNIT.

4.0.12 UNLESS OTHERWISE NOTED, ALL MASONRY WILL BE CONSTRUCTED WITH A RUNNING BOND PATTERN.

4.0.13 ELECTRIC CONDUIT BOXES AND/OR OTHER OBSTRUCTIONS ARE NOT PERMITTED IN CELLS CONTAINING REINFORCING, UNLESS APPROVED BY THE ENGINEER & CONTRACTING OFFICER.

4.0.14 UNLESS OTHERWISE SHOWN ON THE PLANS, ALL LAP SPLICES OF REINFORCING STEEL IN MASONRY WILL BE PER SCHEDULE.

4.0.15 ALL HORIZONTAL REINFORCEMENT BARS WILL BE PLACED IN BOND BEAM MASONRY UNITS.

4.0.16 ALL LINTEL REINFORCEMENT BARS WILL BE PLACED IN LINTEL BEAM BLOCK.

4.0.17 ALL VERTICAL REINFORCEMENT BARS WILL BE PLACED AT THE CENTER OFTHE WALL UNLESS OTHERWISE SHOWN. VERTICAL BARS ARE TO BE TIED OR OTHERWISE FIXED IN POSITION AT INTERVALS OF NOT MORE THAN 200 BAR DIAMETERS AND AT TOP AND BOTTOM.

4.0.18 ANCHOR BOLTS MUST BE SET WITH TEMPLATES AND HELD IN PLACE PRIOR TO GROUTING.

4.0.19 PROVIDE A MINIMUM OF ONE BAR DIAMETER OF GROUT BETWEEN MAIN REINFORCING AND MASONRY UNITS. PROVIDE A MINIMUM OF 1" GROUT AROUND ALL BOLTS EMBEDDED IN MASONRY.

4.0.20 NOT USED

4.0.21 FOR ALL MASONRY WORK INSPECTIONS SEE INSPECTION AND TESTING SPECIFICATIONS.

4.0.22 REFER TO MASONRY CONSTRUCTION DETAILS ON SHEET S502.

5.0 STRUCTURAL STEEL:

5.0.1 THE DESIGN, FABRICATION AND ERECTION OF STRUCTURAL STEEL WILL BE IN ACCORDANCE WITH "AISC SPECIFICATION FOR STRUCTURAL STEEL BUILDINGS" AND STEEL CONSTRUCTION MANUAL AISC 360, LATEST ADOPTED EDITION. EXCEPT AS AMMENDED IN IBC CHAPTER 22.

5.0.2 THE SEISMIC DESIGN OF STEEL STRUCTURES WILL BE IN ACCORDANCE WITH "AISC SEISMIC PROVISIONS FOR STRUCTUAL STEEL BUILDINGS", INCLUDING ALL SUPPLEMENTS AISC 341 EXCEPT AS AMENDED IN IBC CHAPTER 22.

5.0.3 ALL CONNECTIONS WILL BE DETAILED IN ACCORDANCE WITH LATEST EDITION OF AISC "DETAILING FOR STEEL CONSTRUCTION".

5.0.4 STEEL FURNISHED FOR STRUCTURAL LOAD-CARRYING PURPOSES WILL BE PROPERLY IDENTIFIED FOR CONFORMITY TO THE SPECIFIED GRADES SHOWN BELOW AND IN ACCORDANCE WITH ASTM STANDARDS AND PROVISIONS OF IBC CHAPTER 22. STEEL THAT IS NOT READILY IDENTIFIABLE AS TO GRADE FROM MARKING AND TEST RECORDS WILL BE TESTED TO DETERMINE CONFORMITY TO:

D. WIDE FLANGE	ASTM A992 (Fy=50 ksi)
A. ANGLES AND CHANNELS	ASTM A36 (Fy=36 ksi)
B. PLATES	ASTM A36 (Fy=36 ksi)
C. HSS (RECTANGULAR)	ASTM A500 GRADE B (Fy=46 ksi)
E. ANCHOR BOLTS	ASTM F1554 GRADE 55 AT GRAVITY COLUMN

5.0.5 ALL COLUMN ENDS TO BE MILLED.

5.0.6 ALL EXTERIOR STRUCTURAL STEEL PERMANENTLY EXPOSED TO THE WEATHER WILL BE HOT-DIPPED GALVANIZED AFTER FABRICATION. ZINC COATING WILL CONFORM TO ASTM A123 (G-60 U.O.N.).

5.0.7 ALL WELDING DONE AFTER GALVANIZING WILL BE PROTECTED WITH TWO COATS OF "GALVALOY", OR EQUAL. CONTRACTOR TO USE VENTILLATION WHILE PERFORMING THIS WORK AS REQUIRED BY OSHA.

5.0.8 ALL STEEL FABRICATION WILL BE PERFORMED IN AN APPROVED FABRICATION SHOP.

5.0.9 STEEL FABRICATOR WILL VERIFY ALL DIMENSIONS WITH ARCHITECTURAL AND STRUCTURAL DRAWINGS.

5.0.10 ALL METAL ITEMS, INCLUDING CONNECTORS, EXPOSED TO THE WEATHER WILL BE HOT-DIPPED GALVANIZED AFTER FABRICATION.

5.0.11 STRUCTURAL STEEL WILL BE DELIVERED TO THE JOB SITE FREE OF EXCESSIVE RUST, MILL SCALE, GREASE, ETC.

5.0.11 SUBMIT SHOP DRAWINGS TO THE STRUCTURAL ENGINEER & CONTRACTING OFFICER FOR REVIEW PRIOR TO FABRICATION FOR ALL STRUCTURAL STEEL MEMBERS AND ACCESSORIES.

6.0 STRUCTURAL METAL STUDS

6.0.1 STRUCTURAL METAL STUDS MUST BE COLD-FORMED AND OF MINIMUM SIZE AND GAGE AS SHOWN ON PLANS - FINAL DESIGN PER DELEGATED DESIGN ENGINEER. ANY SIZES SHOWN ARE FOR BUDGET PRICING PURPOSES ONLY.

6.0.2 METAL STUD MEMBERS MUST NOT BE CUT FOR PLUMBING OR WIRING UNLESS DETAILED ON THE APPROVED SHOP DRAWINGS.

SYM	DESCRIPTION	DATE	APPR

NAVFAC

SEAL

kaydos-daniels engineers, plc
718 w lane st raleigh nc 27603
nc firm license #P-0279
T 919 828 4966
F 919 828 4967
www.kaydos-daniels.com
A/E INFO

APPROVED
James C. Hodnick, P.E.
FOR COMMANDER NAVFAC 5/13/2026

ACTIVITY

SATISFACTORY TO

DES	LGG	DRW	HON	CHK	LGG
PM/DM	SGL/MDM				
BRANCH MANAGER	CWJ				
CHIEF ENG/ARCH	JWJ				
FIRE PROTECTION	HPN				

DEPARTMENT OF THE NAVY
NAVAL FACILITIES ENGINEERING SYSTEMS COMMAND ~ MIDATLANTIC
NAVAL FACILITIES ENGINEERING COMMAND
NAVAL STATION - NORFOLK, VA
1ST MARINE EXPEDITIONARY FORCE
MARINE CORPS BASE
CAMP LEJEUNE, NC

P-1550 SOF MARINE RAIDER COMPANY / TEAM FACILITIES

STRUCTURAL NOTES

SCALE: AS INDICATED
EPROJECT NO.: 1701820
CONSTR. CONTR. NO.

A3
CO STG

NAVFAC DRAWING NO. 12903751
SHEET 9 OF 121
S-003

FINAL SUBMITTAL

DRAWFORM REVISION: 25 AUGUST 2020

C:\Users\henry.KAYDOS-DANIELS\Documents\P1550 Structure 2023_A3_honewell.rvt
5/6/2026 3:39:00 PM
File Path:
Date:

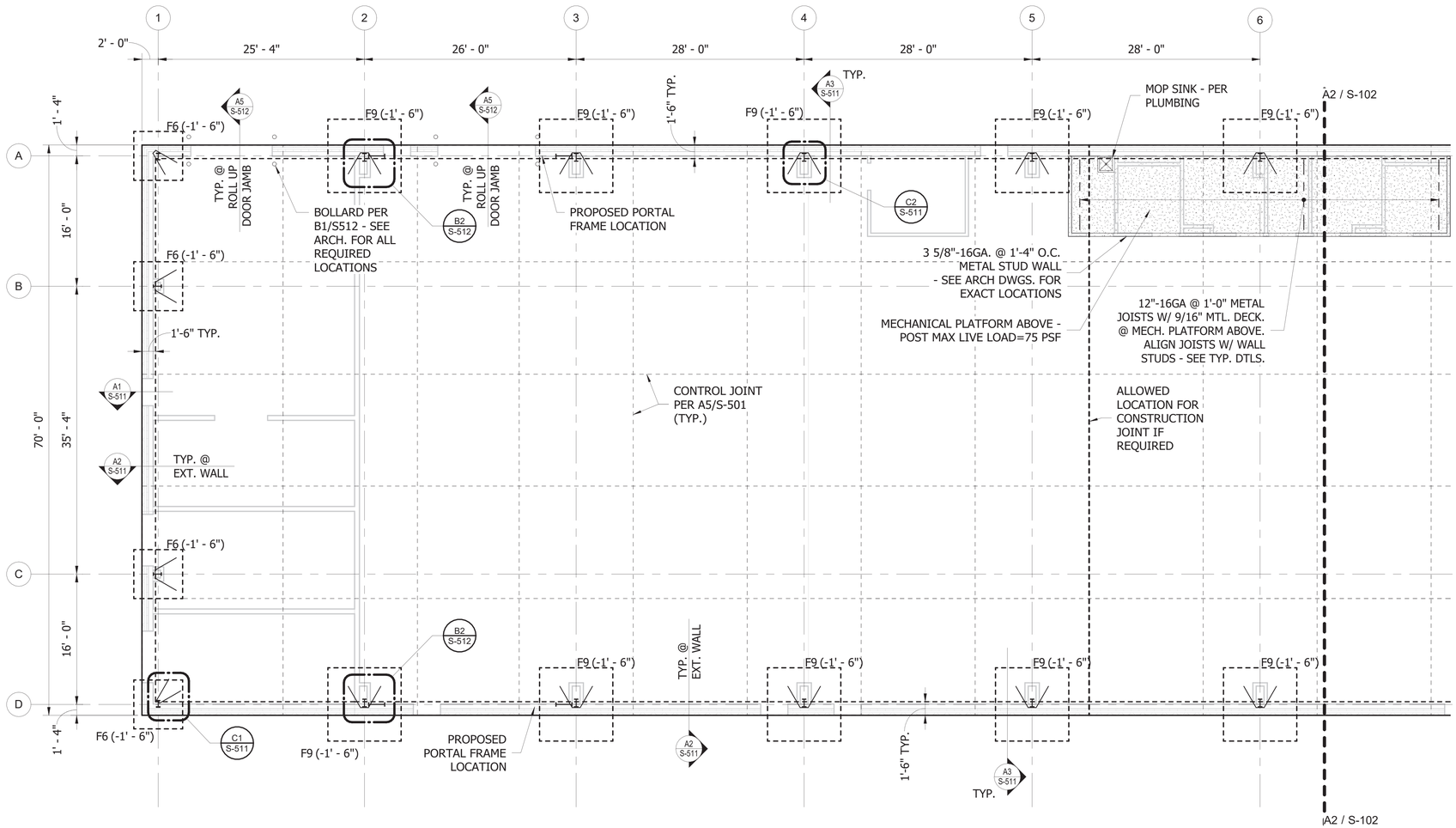

A2 FOUNDATION PLAN - AREA A

SCALE: 1/8" = 1'-0"

N

GENERAL SHEET NOTES

1. ENTIRE AREA TO RECEIVE 6" CONCRETE SLAB ON GRADE REINFORCED WITH #4 REINFORCING BARS @ 18" O.C. IN EACH DIRECTION, UNLESS NOTED OTHERWISE. SLAB TO BEAR ON 6" OF COMPACTED, POROUS FILL. PROVIDE VAPOR BARRIER BETWEEN SLAB AND POROUS FILL.
2. TOP OF SLAB-ON-GRADE IS THE NOMINAL FIRST FLOOR LINE. FINISHED FLOOR ELEVATION (F.F.EL.) = 0'-0" U.O.N.
3. CONSTRUCTION AND CONTROL JOINTS AS SHOWN ON PLAN MUST BE SPACED AT 15'-0" O.C. MAX. EACH WAY. SEE TYPICAL DETAILS ON SHEET S-501.
4. SLAB JOINTS AS SHOWN ON PLAN MUST BE IN SQUARE OR RECTANGULAR (MAX. 1.5:1 RATIO) PATTERN WITH EACH SQUARE OR RECTANGULAR AREA NOT TO EXCEED 225 SQ. FT. SLAB-ON-GRADE CONTROL JOINT LOCATIONS MUST BE APPROVED BY THE ARCHITECT PRIOR TO PLACEMENT OF CONCRETE.
5. F_ ON PLAN INDICATES A COLUMN FOOTING. SEE FOOTING SCHEDULE ON SHEET S-101.
6. MARKS SHOWN THUS (X'-XX") INDICATE TOP OF FOOTING. CONTRACTOR MUST COORDINATE TOP OF FOOTING ELEVATIONS WITH ARCHITECTURAL, MECHANICAL, ELECTRICAL, PLUMBING, AND CIVIL DRAWINGS. THE CONTRACTING OFFICER MUST BE NOTIFIED OF CONFLICTS OR DISCREPANCIES IN TOP OF FOOTING ELEVATIONS.
7. COORDINATE THE WORK OF ALL TRADES WITH THE STRUCTURAL REQUIREMENTS INDICATED. REFER TO CIVIL, MECHANICAL, PLUMBING, AND ELECTRICAL DRAWINGS.
8. FOR SIZE AND LOCATION OF DEPRESSED SLABS, SLAB OPENINGS, FLOOR DRAINS AND OTHER REQUIREMENTS NOT INDICATED REFER TO ARCHITECTURAL DRAWINGS.
9. FOR NATURE AND EXTENT OF DRAINS, SLUMPS, EXTERIOR HARDSCAPE, ETC. REFER TO OTHER DRAWINGS.
10. STRUCTURAL WALLS ARE WALLS THAT RESIST GRAVITY, WIND, AND/OR SEISMIC LOADS. ALL MASONRY WALLS ARE STRUCTURAL WALLS. WALLS (OR PORTIONS OF WALLS) NOT INDICATED ON STRUCTURAL DRAWINGS ARE PARTITION WALLS. FOR DIMENSIONS, EXTENT, AND NATURE OF ALL WALLS, REFER TO ARCHITECTURAL DRAWINGS. VERIFY ALL DIMENSIONS WITH ARCHITECTURAL DRAWINGS.
11. AT REENTRANT SLAB CONDITIONS PROVIDE #4 BARS DIAGONAL TO THE EDGES OF THE CORNER. BARS TO BE 4'-0" LONG AND PLACED WITH 2" OF COVER FROM SLAB EDGE.
12. SEE TYPICAL CONSTRUCTION DETAILS ON SHEETS S-501 THROUGH S-504.
13. SEE GENERAL STRUCTURAL NOTES ON SHEETS S-002 & S-003.

RIGID FRAME AND PRE-ENGINEERED BUILDING NOTES:

1. FOUNDATION HAS BEEN DESIGNED FOR REACTIONS INDICATED. BUILDING MANUFACTURER MUST SUBMIT LOAD AND COLUMN REACTIONS TO ENGINEER FOR REVIEW PRIOR TO CONSTRUCTION OF FOUNDATION
2. CONTRACTOR MUST COORDINATE ALL EQUIPMENT TO BE SUPPORTED FROM THE STRUCTURE WITH THE METAL BUILDING SUPPLIER BEFORE CONSTRUCTION
3. CONTRACTOR MUST COORDINATE ALL WALL AND ROOF OPENING SIZES AND LOCATION WITH METAL BUILDING SUPPLIER BEFORE OPENINGS ARE CUT.
4. PROVIDE SAG RODS AS REQUIRED FOR WIND GIRTS.
5. MAX. STORY DRIFT RATIO FOR ALL LATERAL LOADS=L/400.
6. MAX. DEFLECTION AT MEMBERS SUPPORTING MASONRY=L/720.
7. CROSS BRACING AND/OR PORTAL FRAME LOCATIONS AS INDICATED ON STRUCTURAL PLANS INDICATE ONLY POSSIBLE LOCATIONS. PEMB ENGINEER MUST COORDINATE WITH ARCHITECTURAL OPENINGS FOR FINAL LOCATIONS

KEY PLAN

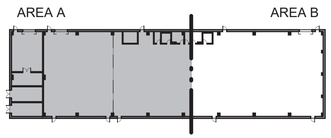

GRAPHIC SCALE: 1/8"=1'-0"

8' 0 4' 8' 16'

ESTIMATED UNFACTORED BUILDING REACTIONS (KIPS)

COLUMNS	DIRECTION	DL	LL	WL
A (2-9), D (2-9)	HORIZ.	10	15	20
	VERT.	14	20	-23
A-1, D-1 A-10, D-10	HORIZ.	-	-	3
	VERT.	1	1	-2
B-1, C-1 B-10, C-10	HORIZ.	-	-	7
	VERT.	7	10	-11

PAD FOOTING SCHEDULE

MARK	LENGTH	WIDTH	THICKNESS	REINFORCING	REMARKS
F6	6' - 0"	6' - 0"	1' - 6"	(7) #5 EA. WAY TOP & BOTT.	-
F9	9' - 0"	9' - 0"	1' - 6"	(10) #6 EA. WAY TOP & BOTT.	-

SYM | DESCRIPTION | DATE | APPR

NAVFAC

SEAL

kaydos-daniels engineers, plic
718 w lane st
raleigh nc 27603
nc firm license #P-0279
T 919 828 4966
F 919 828 4967
www.kaydos-daniels.com
A/E INFO

APPROVED
FOR COMMANDER NAVFAC 5/15/2026
ACTIVITY

SATISFACTORY TO

DES	LGG	DRW	HON	CHK	LGG
PM/DM	SGL/MDM				
BRANCH MANAGER	CWJ				
CHIEF ENG/ARCH	JWJ				
FIRE PROTECTION	HPN				

NAVAL FACILITIES ENGINEERING COMMAND
NAVAL FACILITIES ENGINEERING SYSTEMS COMMAND ~ MIDATLANTIC
NAVAL STATION - NORFOLK, VA
CAMP LEJEUNE, NC
DEPARTMENT OF THE NAVY
1ST MARINE DIVISION
MARINE CORPS BASE

P-1550 SOF MARINE RAIDER COMPANY / TEAM FACILITIES

FOUNDATION PLAN - AREA A

SCALE: AS INDICATED
EPROJECT NO.: 1701820
CONSTR. CONTR. NO.

NAVFAC DRAWING NO. 12903752
SHEET 10 OF 121

A3
CO STG

S-101

FINAL SUBMITTAL

DRAWFORM REVISION: 25 AUGUST 2020

File Path: C:\Users\henry.KAYDOS-DANIELS\Documents\P1550 Structure 2023_A3_honewell.rvt
Date: 5/6/2026 3:39:01 PM

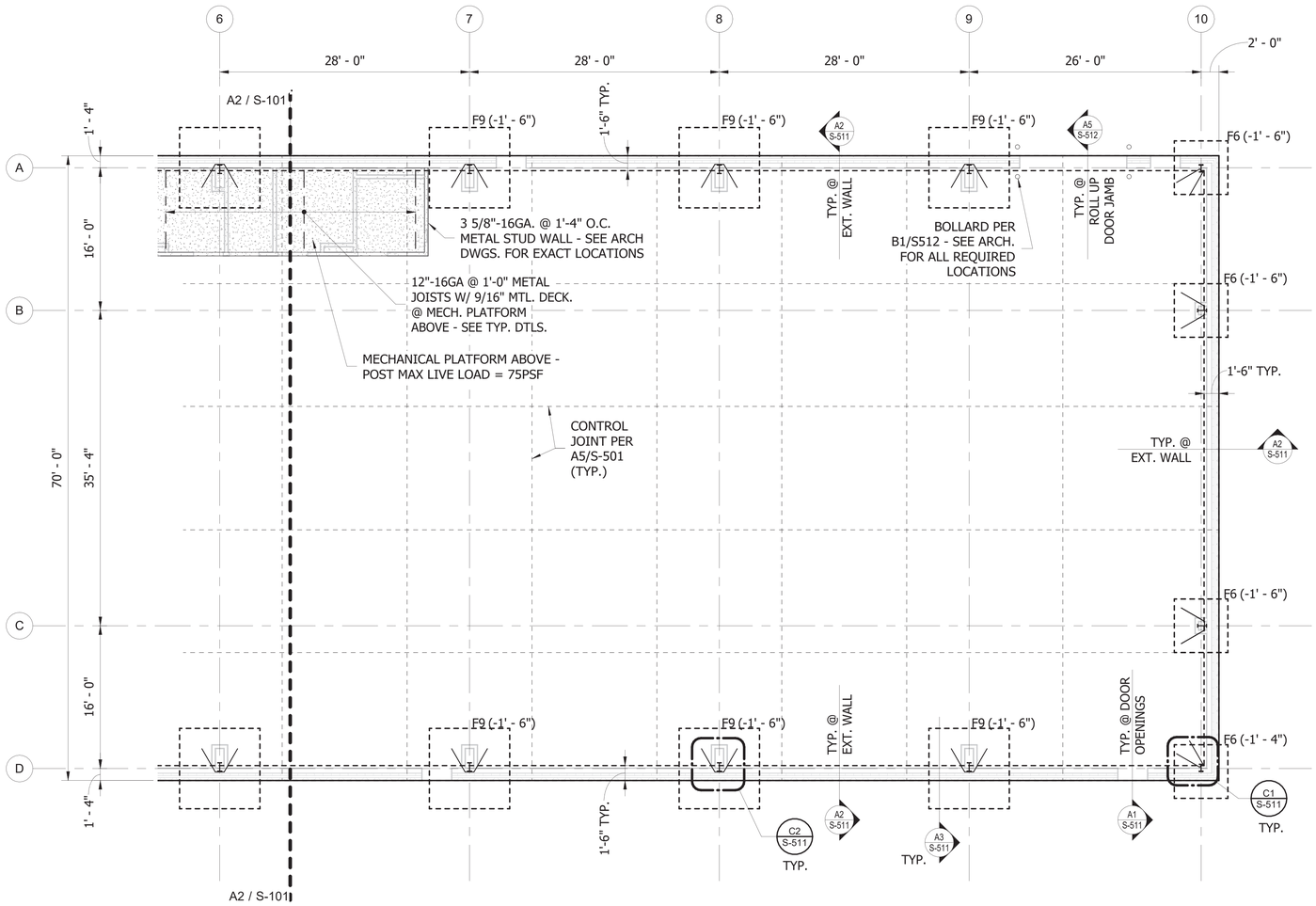

A2 FOUNDATION PLAN - AREA B

SCALE: 1/8" = 1'-0"

N

GENERAL SHEET NOTES

1. ENTIRE AREA TO RECEIVE 6" CONCRETE SLAB ON GRADE REINFORCED WITH #4 REINFORCING BARS @ 18" O.C. IN EACH DIRECTION, UNLESS NOTED OTHERWISE. SLAB TO BEAR ON 6" OF COMPACTED, POROUS FILL. PROVIDE VAPOR BARRIER BETWEEN SLAB AND POROUS FILL.
2. TOP OF SLAB-ON-GRADE IS THE NOMINAL FIRST FLOOR LINE. FINISHED FLOOR ELEVATION (F.F.EL.) = 0'-0" U.O.N.
3. CONSTRUCTION AND CONTROL JOINTS AS SHOWN ON PLAN MUST BE SPACED AT 15'-0" O.C. MAX. EACH WAY. SEE TYPICAL DETAILS ON SHEET S-501.
4. SLAB JOINTS AS SHOWN ON PLAN MUST BE IN SQUARE OR RECTANGULAR (MAX. 1.5:1 RATIO) PATTERN WITH EACH SQUARE OR RECTANGULAR AREA NOT TO EXCEED 225 SQ. FT. SLAB-ON-GRADE CONTROL JOINT LOCATIONS MUST BE APPROVED BY THE ARCHITECT PRIOR TO PLACEMENT OF CONCRETE.
5. F_ ON PLAN INDICATES A COLUMN FOOTING. SEE FOOTING SCHEDULE ON SHEET S-101.
6. MARKS SHOWN THUS (X'-XX") INDICATE TOP OF FOOTING. CONTRACTOR MUST COORDINATE TOP OF FOOTING ELEVATIONS WITH ARCHITECTURAL, MECHANICAL, ELECTRICAL, PLUMBING, AND CIVIL DRAWINGS. THE CONTRACTING OFFICER MUST BE NOTIFIED OF CONFLICTS OR DISCREPANCIES IN TOP OF FOOTING ELEVATIONS.
7. COORDINATE THE WORK OF ALL TRADES WITH THE STRUCTURAL REQUIREMENTS INDICATED. REFER TO CIVIL, MECHANICAL, PLUMBING, AND ELECTRICAL DRAWINGS.
8. FOR SIZE AND LOCATION OF DEPRESSED SLABS, SLAB OPENINGS, FLOOR DRAINS AND OTHER REQUIREMENTS NOT INDICATED REFER TO ARCHITECTURAL DRAWINGS.
9. FOR NATURE AND EXTENT OF DRAINS, SLUMPS, EXTERIOR HARDSCAPE, ETC. REFER TO OTHER DRAWINGS.
10. STRUCTURAL WALLS ARE WALLS THAT RESIST GRAVITY, WIND, AND/OR SEISMIC LOADS. ALL MASONRY WALLS ARE STRUCTURAL WALLS. WALLS (OR PORTIONS OF WALLS) NOT INDICATED ON STRUCTURAL DRAWINGS ARE PARTITION WALLS. FOR DIMENSIONS, EXTENT, AND NATURE OF ALL WALLS, REFER TO ARCHITECTURAL DRAWINGS. VERIFY ALL DIMENSIONS WITH ARCHITECTURAL DRAWINGS.
11. AT REENTRANT SLAB CONDITIONS PROVIDE #4 BARS DIAGONAL TO THE EDGES OF THE CORNER. BARS TO BE 4'-0" LONG AND PLACED WITH 2" OF COVER FROM SLAB EDGE.
12. SEE TYPICAL CONSTRUCTION DETAILS ON SHEETS S-501 THROUGH S-504.
13. SEE GENERAL STRUCTURAL NOTES ON SHEETS S-002 & S-003.

RIGID FRAME AND PRE-ENGINEERED BUILDING NOTES:

1. FOUNDATION HAS BEEN DESIGNED FOR REACTIONS INDICATED. BUILDING MANUFACTURER MUST SUBMIT LOAD AND COLUMN REACTIONS TO ENGINEER FOR REVIEW PRIOR TO CONSTRUCTION OF FOUNDATION
2. CONTRACTOR MUST COORDINATE ALL EQUIPMENT TO BE SUPPORTED FROM THE STRUCTURE WITH THE METAL BUILDING SUPPLIER BEFORE CONSTRUCTION
3. CONTRACTOR MUST COORDINATE ALL WALL AND ROOF OPENING SIZES AND LOCATION WITH METAL BUILDING SUPPLIER BEFORE OPENINGS ARE CUT.
4. PROVIDE SAG RODS AS REQUIRED FOR WIND GIRTS.
5. MAX. STORY DRIFT RATIO FOR ALL LATERAL LOADS=L/400.
6. MAX. DEFLECTION AT MEMBERS SUPPORTING MASONRY=L/720.
7. CROSS BRACING AND/OR PORTAL FRAME LOCATIONS AS INDICATED ON STRUCTURAL PLANS INDICATE ONLY POSSIBLE LOCATIONS. PEMB ENGINEER MUST COORDINATE WITH ARCHITECTURAL OPENINGS FOR FINAL LOCATIONS

KEY PLAN

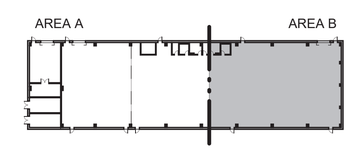

GRAPHIC SCALE: 1/8"=1'-0"

8' 0 4' 8' 16'

A3

CO STG

FINAL SUBMITTAL

SYM	DESCRIPTION	DATE	APPR

NAVFAC

NORTH CAROLINA PROFESSIONAL ENGINEER SEAL 032586 08 MAY 2026 LUCAS G. A. GELO

SEAL

kaydos-daniels engineers, plc
718 w lane st
raleigh nc 27603
nc firm license #P-0279
T 919 828 4966
F 919 828 4967
www.kaydos-daniels.com

A/E INFO

APPROVED

FOR COMMANDER NAVFAC 5/13/2026

ACTIVITY

SATISFACTORY TO

DES	LGG	DRW	HON	CHK	LGG

PM/DM SGL/MDM

BRANCH MANAGER CWJ

CHIEF ENG/ARCH JWJ

FIRE PROTECTION HPN

DEPARTMENT OF THE NAVY
NAVAL FACILITIES ENGINEERING SYSTEMS COMMAND ~ MIDATLANTIC
1PT MARINE DIV
2ND MARINE
MARINE CORPS BASE
NAVAL FACILITIES ENGINEERING COMMAND
NAVAL STATION - NORFOLK, VA.
CAMP LEJEUNE, NC

P-1550 SOF MARINE RAIDER COMPANY / TEAM FACILITIES

FOUNDATION PLAN - AREA B

SCALE: AS INDICATED

EPROJECT NO.: 1701820

CONSTR. CONTR. NO.

NAVFAC DRAWING NO. 12903753

SHEET 11 OF 121

S-102

DRAWFORM REVISION: 25 AUGUST 2020

File Path: C:\Users\henry.KAYDOS-DANIELS\Documents\P1550 Structure 2023_A3_honewell.rvt
Date: 5/6/2026 3:39:01 PM

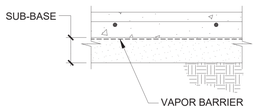

TYP. SLAB ON GRADE (S.O.G) W/ MOISTURE BARRIER — A

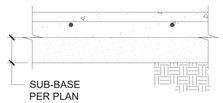

REFER TO ARCHITECTURAL DRAWINGS FOR LOCATIONS

TYP. SLAB ON GRADE (S.O.G.) W/O MOISTURE BARRIER — B

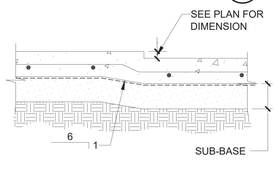

TYP. SLAB DEPRESSION — C

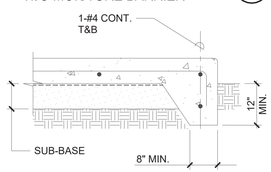

TYP. SLAB EDGE — D

TYP. SLAB ON GRADE (S.O.G.) — C2

NOT TO SCALE

NOTES:

1. FOR FOOTINGS WITH A SINGLE LAYER OF REINFORCEMENT, USE THE OUTER LAYER REINFORCING LAYOUT AND PLACE AT CENTER OF THE FOOTING.
2. WHERE THERE ARE MORE THAN TWO LAYERS OF REINFORCEMENT, THE MIDDLE LAYER REINFORCEMENT WILL BE EXTENDED AS FAR AS POSSIBLE WITH A STANDARD HOOK AT THE ENDS.
3. SEE SCHEDULE FOR DEVELOPMENT/SPLICE LENGTHS WHERE REQUIRED.

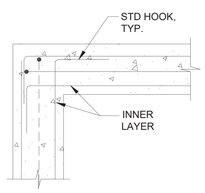

AT CORNER

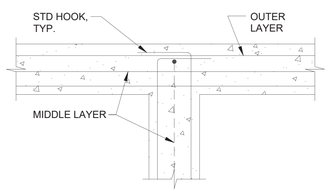

AT INTERSECTION

TYP. REINF. AT FOOTING INTERSECTIONS — B2

NOT TO SCALE

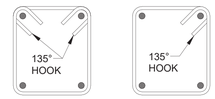

CLOSED HOOP, STIRRUP OR TIE

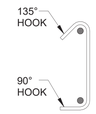

CROSS TIE

OPEN HOOP, STIRRUP OR TIE

CIRCULAR HOOP

BAR SIZE	BEND DIA.
#5 & SMALLER	$4d_b$
#6 THRU #8	$6d_b$

D = BEND DIA.
d_b = BAR DIA.

BEND DIAMETERS

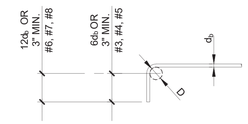

90° STD HOOK

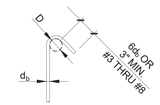

135° STD HOOK

STANDARD HOOK LENGTHS

MIN. BEND DIAMETERS AND STANDARD HOOK LENGTHS FOR STIRRUPS, TIES, HOOPS AND CROSS TIES

BAR SIZE	BEND DIA.
#3 THRU #8	$6d_b$
#9 THRU #11	$8d_b$
#14 THRU #18	$10d_b$

D = BEND DIA.
d_b = BAR DIA.

BEND DIAMETERS

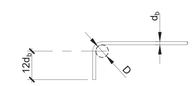

90° STD HOOK

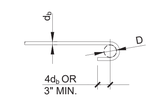

180° STD HOOK

STANDARD HOOK LENGTHS

MIN. BEND DIAMETERS AND STANDARD HOOK LENGTHS FOR BARS OTHER THAN STIRRUPS, TIES, HOOPS AND CROSS TIES

LEGENDS FOR REINF. BENDS (NOT TO SCALE)

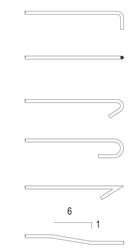

INDICATES 90° BEND IN PLANE OF DRAWING

INDICATES 90° BEND PERPENDICULAR TO PLANE OF DRAWING

INDICATES 135° BEND IN PLANE OF DRAWING

INDICATES 180° BEND IN PLANE OF DRAWING

INDICATES 135° OR 180° BEND PERPENDICULAR TO PLANE OF DRAWING

INDICATES OFFSET IN PLANE OF DRAWING

TYP. REINFORCING BAR BENDS — C5

NOT TO SCALE

NOTES:

1. PROVIDE NON-CORROSIVE METAL SLEEVES WITH INNER DIAMETER 1" GREATER THAN THE OUTER DIAMETER OF THE PIPE.
2. IF PIPE IS IN PLACE PRIOR TO POURING CONCRETE, WRAP PIPE WITH 1" STYROFOAM INSULATION BEFORE POURING CONCRETE IN LIEU OF SLEEVE.

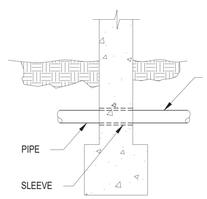

PIPE THRU STEM WALL — A

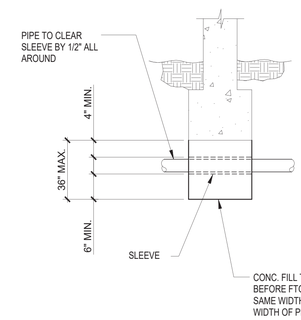

PIPE PERPENDICULAR TO AND BELOW FOOTING — B

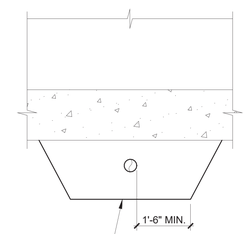

PIPE PARALLEL TO FOOTING — C

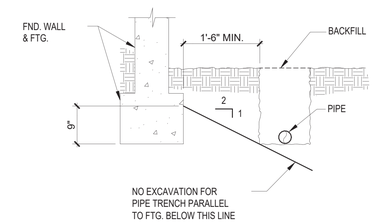

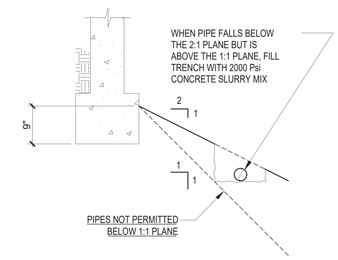

TYP. PIPE SLEEVE AT FOOTINGS — B5

NOT TO SCALE

CONTRACTOR NOTE:
BARS MAY BE DRILLED AND EPOXIED INTO SLAB.

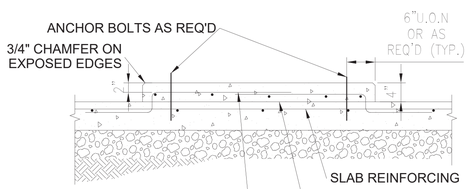

NOTE:
PAD DIMENSIONS, ANCHOR BOLT SIZES AND LOCATIONS, AND OTHER EMBEDDED ITEMS WILL CONFORM TO EQUIPMENT MANUFACTURER'S REQUIREMENTS.

TYP. INTERIOR CONC. EQUIP. PAD — A2

NOT TO SCALE

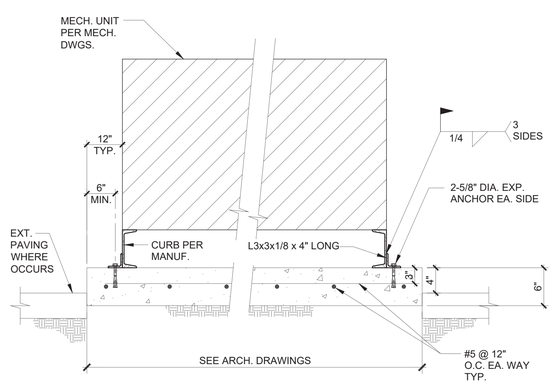

FOR EQUIP. 5000 lbs & SMALLER — A

TYP. EXTERIOR MECHANICAL PAD — A3

NOT TO SCALE

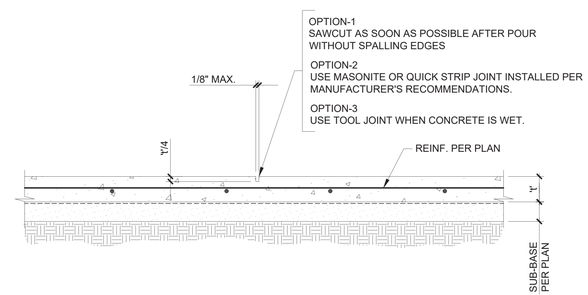

SAWED JOINT (CONTROL JOINT) — A

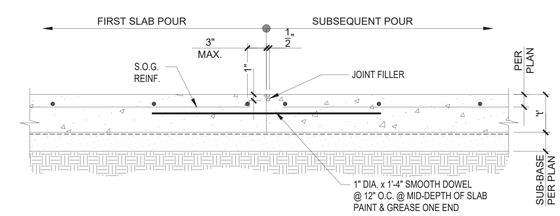

POUR JOINT (CONSTRUCTION JOINT) @ SLAB ON GRADE TO BE PLACED AS REQUIRED — B

TYP. SLAB ON GRADE JOINTS — A5

NOT TO SCALE

SYM	DESCRIPTION	DATE	APPR

NAVFAC

NORTH CAROLINA PROFESSIONAL SEAL 032586 08 MAY 2026 ENGINEER LUCAS G. A. GELO

SEAL

kaydos-daniels engineers, plc
718 w lane st
raleigh nc 27603
nc firm license #P-0279
T 919 828 4966
F 919 828 4967
www.kaydos-daniels.com

A/E INFO

APPROVED
DAVID W. HON, PE
FOR COMMANDER NAVFAC 5/13/2026

ACTIVITY

SATISFACTORY TO

DES	LGG	DRW	HON	CHK	LGG
PM/DM	SGL/MDM				
BRANCH MANAGER	CWJ				
CHIEF ENG/ARCH	JWJ				
FIRE PROTECTION	HPN				

DEPARTMENT OF THE NAVY
NAVAL FACILITIES ENGINEERING SYSTEMS COMMAND ~ MIDATLANTIC
NAVAL FACILITIES ENGINEERING COMMAND
NAVAL STATION - NORFOLK, VA
CAMP LEJEUNE, NC
IPT MARINE
MARINE CORPS BASE

P-1550 SOF MARINE RAIDER COMPANY / TEAM FACILITIES

GENERAL CONSTRUCTION DETAILS

SCALE: AS INDICATED
EPROJECT NO.: 1701820
CONSTR. CONTR. NO.
NAVFAC DRAWING NO. 12903754
SHEET 12 OF 121
A3
CO STG
S-501

FINAL SUBMITTAL

DRAWFORM REVISION: 25 AUGUST 2020

C:\Users\henry.KAYDOS-DANIELS\Documents\P1550 Structure 2023_A3_honewell.rvt
5/6/2026 3:39:02 PM
File Path:
Date:

MASONRY LINTEL SCHEDULE (NON-LOAD BEARING)				
WALL TYPE	MASONRY OPENING, M.O.	TYPE	SIZE	REMARKS
8" CMU	M.O. ≤ 6'-0"		8" X 8" W/ (2) # 5	
	6'-0" < M.O. ≤ 12'-0"		8" X 16" W/ (2) # 6	
4" BRICK OR 4" CMU	M.O. ≤ 12'-0"		L8 X 4 X 7/16 (LLH)	NOTE 4

MASONRY LINTEL DETAIL NOTES

1. PROVIDE LINTELS AS SHOWN UNLESS NOTED OTHERWISE ON PLANS, SECTIONS, OR DETAILS FOR ALL OPENINGS WIDER THAN 1'-0".
2. SEE ARCHITECTURAL DRAWINGS FOR LOCATIONS OF REQUIRED LINTELS.
3. BEAR MASONRY LINTELS MINIMUM 8" EACH END.
4. CMU OR METAL STUD BACK-UP WALL.
5. ALL STRUCTURAL STEEL LINTELS TO BE GALVANIZED.

NON-LOAD BEARING MASONRY LINTELS

NOTES:

1. FOR LIGHTWEIGHT CONCRETE, MULTIPLY THE DEVELOPMENT LENGTH BY 1.3
2. FOR BAR BEND DIMENSIONS SEE TYPICAL BAR BEND DETAIL

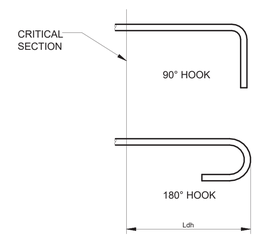

DEV. LENGTH (L_{dh}) OF STANDARD HOOKS FOR GRADE 60 BAR STD. HOOKS IN TENSION		
BAR SIZE NO.	f' (NORMAL WEIGHT CONCRETE), psi	
	3000	4000
#3	9"	8"
#4	11"	10"
#5	14"	12"
#6	17"	15"
#7	20"	17"
#8	22"	19"
#9	25"	22"
#10	28"	25"
#11	31"	27"

DEV. LENGTHS FOR STANDARD HOOKS

NOT TO SCALE

B4

NOTES:

1. DEVELOPMENT/SPLICE LENGTH LISTED IN TABLES ABOVE ARE FOR GRADE 60, UNCOATED, BOTTOM REINFORCEMENT IN NORMAL WEIGHT CONCRETE. MINIMUM DEVELOPMENT/SPLICE LENGTH IS 12".
2. FOR TOP BARS, MULTIPLY DEVELOPMENT/SPLICE LENGTH BY 1.3. TOP BAR IS DEFINED AS HORIZONTAL REINFORCEMENT PLACED SUCH THAT MORE THAN 12" OF FRESH CONCRETE IS CAST BELOW DEVELOPMENT LENGTH OR SPLICE.
3. ALL SPLICES SHALL BE STAGGERED PER FIGURE 1 BELOW EXCEPT FOOTING AND SLAB ON GRADE.

DEVELOPMENT LENGTH FOR DEFORMED BARS (L_d)			
	f'_c psi	#6 AND SMALLER BARS AND DEFORMED WIRES	#7 AND LARGER BARS
CLEAR SPACING OF BARS BEING DEVELOPED OR SPLICED NOT LESS THAN d_b , CLEAR COVER NOT LESS THAN d_b , AND BEAM STIRRUPS OR COLUMN TIES THROUGHOUT L_d NOT LESS THAN THE CODE MINIMUM OR CLEAR SPACING OF BARS BEING DEVELOPED OR SPLICED NOT LESS THAN $2d_b$ AND CLEAR COVER NOT LESS THAN d_b	3000	44 d_b	55 d_b
	4000	38 d_b	47 d_b
	-	-	-
	-	-	-
	-	-	-
OTHER CASES	3000	66 d_b	82 d_b
	4000	57 d_b	71 d_b

SPLICE LENGTH FOR DEFORMED BARS (Lsb)			
	f'_c psi	#6 AND SMALLER BARS AND DEFORMED WIRES	#7 AND LARGER BARS
CLEAR SPACING OF BARS BEING DEVELOPED OR SPLICED NOT LESS THAN d_b , CLEAR COVER NOT LESS THAN d_b , AND BEAM STIRRUPS OR COLUMN TIES THROUGHOUT L_d NOT LESS THAN THE CODE MINIMUM OR CLEAR SPACING OF BARS BEING DEVELOPED OR SPLICED NOT LESS THAN $2d_b$ AND CLEAR COVER NOT LESS THAN d_b	3000	58 d_b	72 d_b
	4000	50 d_b	62 d_b
	-	-	-
	-	-	-
	-	-	-
OTHER CASES	3000	86 d_b	107 d_b
	4000	75 d_b	93 d_b

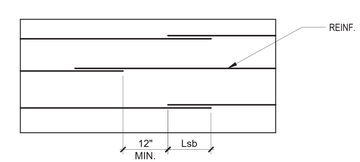

FIGURE-1

TENSION DEVELOPMENT LENGTH & SPLICES

NOT TO SCALE

A5

A3

CO STG

FINAL SUBMITTAL

DRAWFORM REVISION: 25 AUGUST 2020

SYM	DESCRIPTION	DATE	APPR

SEAL

NORTH CAROLINA PROFESSIONAL SEAL 032586 08 MAY 2026 ENGINEER LUCAS G. A. GELO

k-d kaydos-daniels engineers, plc

718 w lane st
raleigh nc 27603
nc firm license #P-0279

T 919 828 4966
F 919 828 4967
www.kaydos-daniels.com

A/E INFO

APPROVED
Jaime E. Donahue, P.E.

FOR COMMANDER NAVFAC 5/13/2026

ACTIVITY

SATISFACTORY TO

DES	LGG	DRW	HON	CHK	LGG

PM/DM	SGL/MDM
BRANCH MANAGER	CWJ
CHIEF ENG/ARCH	JWJ
FIRE PROTECTION	HPN

DEPARTMENT OF THE NAVY
NAVAL FACILITIES ENGINEERING SYSTEMS COMMAND ~ MIDATLANTIC
NAVAL FACILITIES ENGINEERING COMMAND
NAVAL STATION - NORFOLK, VA.
1ST MARINE DIVISION
MARINE CORPS BASE
CAMP LEJEUNE, NC

P-1550 SOF MARINE RAIDER COMPANY / TEAM FACILITIES

GENERAL CONSTRUCTION DETAILS

SCALE: AS INDICATED

EPROJECT NO.: 1701820

CONSTR. CONTR. NO.

NAVFAC DRAWING NO.
12903755

SHEET 13 OF 121

S-502

C:\Users\henry.KAYDOS-DANIELS\Documents\P1550 Structure 2023_A3_honewell.rvt
5/6/2026 3:39:02 PM

File Path:
Date:

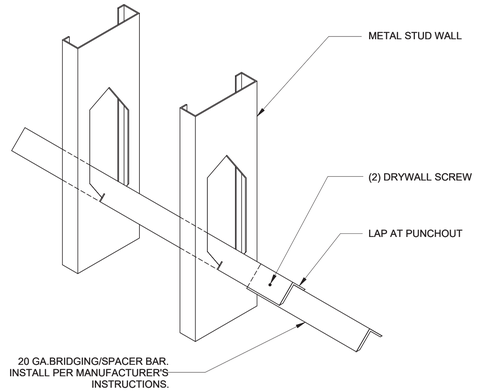

STUD BRIDGING

NOT TO SCALE

C2

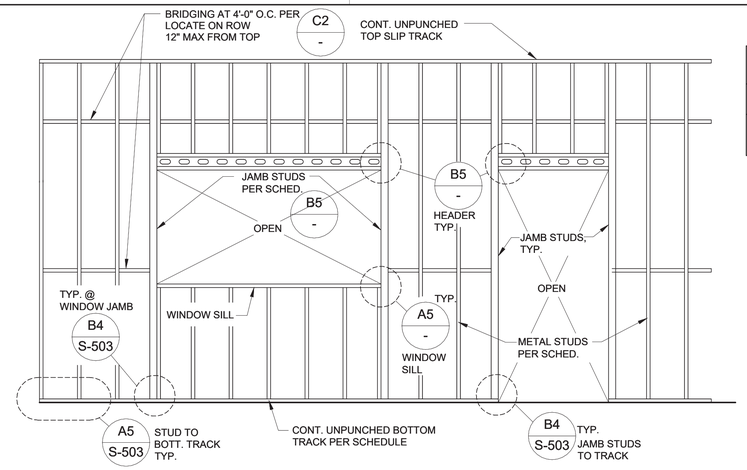

NON-BEARING EXTERIOR METAL STUD WALL ELEVATION AND SCHEDULE

NOT TO SCALE

C5

EXTERIOR NON-BEARING METAL STUD WALL SCHEDULE WITH 40.0 PSF LATERAL LOADING				
MARK	STUD TYPE	SPACING	T & B TRACK	REMARKS
TYP.	600S162-43 (50 KSI)	16" O.C.	600T150-43 (50KSI)	

NOTES:

1. ALL METALS IDENTIFIED SHALL BE PROVIDED BY SSMA APPROVED SUPPLIER PER I.C.B.O REPORT ER-4943P. REFER TO THE REPORT FOR ALL REQUIREMENTS AND INFORMATION NOT LISTED OR SHOWN HERE.
2. WEAK AXIS TORSIONAL BRIDGING (WEB BRACINNG IS REQUIRED AT 4'-0" O.C. SEE C2/S503
3. CONTINOUS SUPPORT FOR EACH FLANGE (BOTH SIDES) USING MIN. 1/2" THICK GYPSUM WALL BOARD WITH MIN. #6 SCREW ATTACHED AT 12" O.C. DIRECTLY STUD FLANGE IS REQUIRED.
4. IN LIEU OF PROVIDING CONTINOUS SUPPORT FOR EACH FLANGE, USING GYP. BOARD ON ONE SIDE AND STRAP BRACING ON THE OTHER IS ALLOWED SEE B2/S503
5. MAX. ALLOWABLE DEFLECTION IS L/240 FOR NON-BRITTLE FINISHES AND L/360 FOR BRITTLE FINISHED. WHERE METAL STUD WALL IS USED TO PROVIDE LATERAL BRACING FOR BRICK OR STONE VENEER THE DEFLECTION SHALL BE LIMITED TO 0.60

NOTE:
CONTINUOUS STRAPPING IS REQUIRED ON THE SIDE OF STUD WALL WHERE SHEATHING DOES NOT OCCUR.

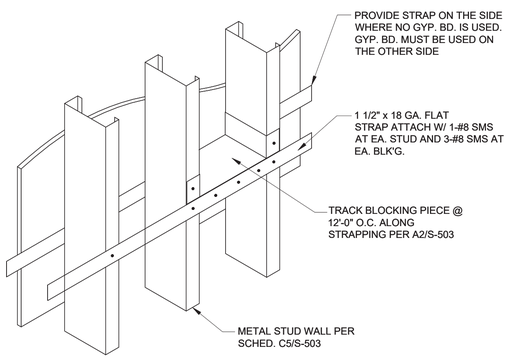

FLAT STRAP LATERAL BRACING

NOT TO SCALE

B2

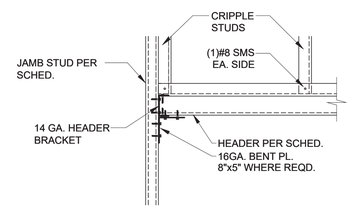

ELEVATION

TYP. HEADER ATTACHMENT TO JAMB STUDS

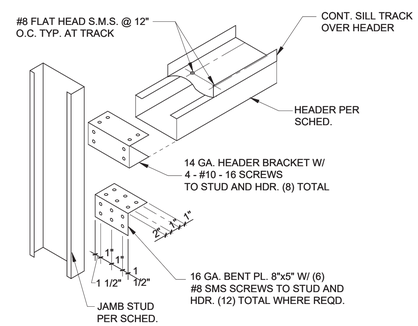

6" EXTERIOR NON-BEARING WALL HEADER SCHEDULE						
MARK	OPENING SIZE	HEADER	TRACKS	NO. OF SCREWS @ EA. END	PROFILE	REQ'D. JAMB STUD
HD-1	0'-0" TO 3'-6"	6" 18GA	(1) 600T150-43	14 GA. HEADER BRACKET W/ 4- #10-16 SCREWS		6" 16GA
HD-2	3'-7" TO 6'-0"	6" 18GA	(2) 600T150-43	14 GA. HEADER BRACKET W/ 4- #10-16 SCREWS AND 16 GA. BENT PL. W/ (6) #8 SMS SCREWS		6" 16GA
HD-3	6'-1" TO 8'-7"	6" 14GA	(2) 600T150-43	14 GA. HEADER BRACKET W/ 4- #10-16 SCREWS AND 16 GA. BENT PL. W/ (6) #8 SMS SCREWS		6" 12GA

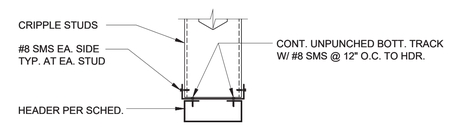

HEADER SECTION

TYPICAL EXTERIOR NON-BEARING WALL HEADER

NOT TO SCALE

B5

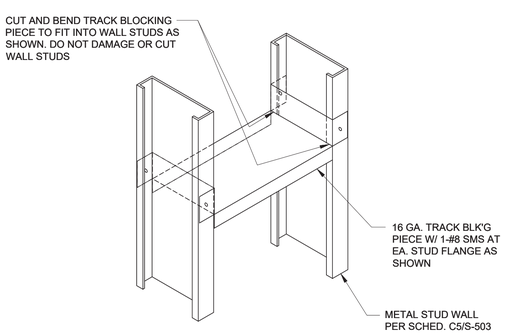

TYPICAL BLOCKING

NOT TO SCALE

A2

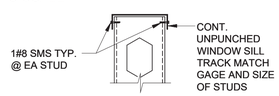

TYP. SILL CONN.

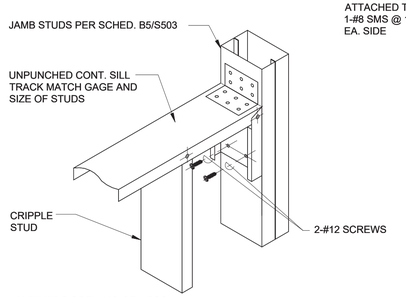

3'-6" WIDE OPENING OR LESS — A

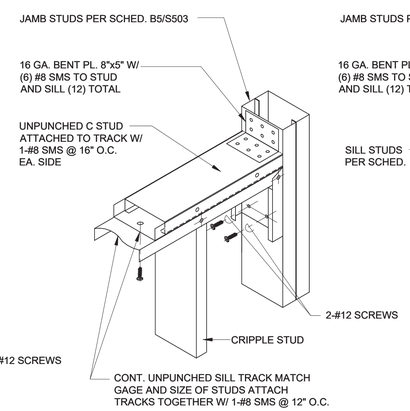

3'-7" TO 6'-0" OPENING — B

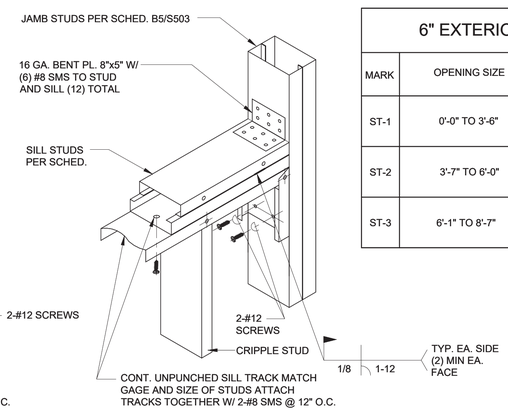

6'-1" TO 8'-7" OPENING — C

6" EXTERIOR NON-BEARING WALL SILL TRACK SCHEDULE					
MARK	OPENING SIZE	SILL TRACK	REQ'D NO. OF SCREWS AT EA. LEG OF CLIP ANGLE	PROFILE	DETAIL
ST-1	0'-0" TO 3'-6"	(1) 600T200-54	8"x5" 16 GA. BENT PL. W/ 6-#8 SMS SCREWS		A -
ST-2	3'-7" TO 6'-0"	(2) 600T200-54 (1) 600S200-54	8"x5" 16 GA. BENT PL. W/ 6-#8 SMS SCREWS		B -
ST-3	6'-1" TO 8'-7"	(2) 600S200-54 (1) 600T200-54	8"x5" 16 GA. BENT PL. W/ 6-#8 SMS SCREWS		C -

SILL TO JAMB STUD CONNECTION

NOT TO SCALE

A5

SYM	DESCRIPTION	DATE	APPR

NAVFAC

SEAL

kaydos-daniels engineers, pllc
718 w lane st, raleigh nc 27603, nc firm license #P-0279
T 919 828 4966, F 919 828 4967, www.kaydos-daniels.com

A/E INFO

APPROVED
FOR COMMANDER NAVFAC 5/13/2026

ACTIVITY

SATISFACTORY TO

DES	LGG	DRW	HON	CHK	LGG
PM/DM	SGL/MDM				
BRANCH MANAGER	CWJ				
CHIEF ENG/ARCH	JWJ				
FIRE PROTECTION	HPN				

DEPARTMENT OF THE NAVY
NAVAL FACILITIES ENGINEERING SYSTEMS COMMAND ~ MIDATLANTIC
NAVAL FACILITIES ENGINEERING COMMAND
NAVAL STATION - NORFOLK, VA.
CAMP LEJEUNE, NC
DPT. MARINE CORPS BASE
MARINE CORPS BASE
P-1550 SOF MARINE RAIDER COMPANY / TEAM FACILITIES
GENERAL CONSTRUCTION DETAILS

SCALE: AS INDICATED
EPROJECT NO.: 1701820
CONSTR. CONTR. NO.
NAVFAC DRAWING NO. 12903756
SHEET 14 OF 121
A3
CO STG
S-503

FINAL SUBMITTAL

DRAWFORM REVISION: 25 AUGUST 2020

C:\Users\henry.KAYDOS-DANIELS\Documents\P1550 Structure 2023_A3_honewell.rvt
5/6/2026 3:39:03 PM
File Path:
Date:

NOTE:
SEE MECHANICAL
DWGS. FOR LOCATION

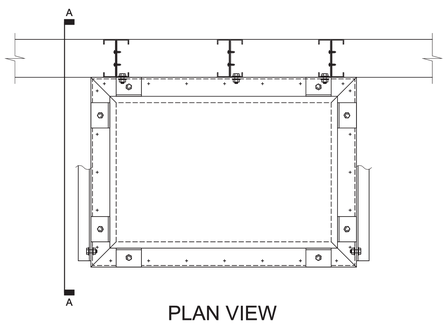

PLAN VIEW

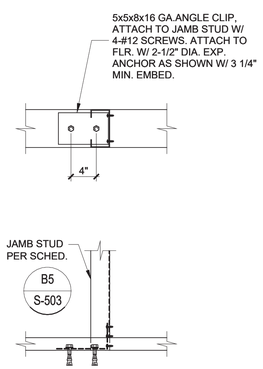

TYPICAL JAMB STUD ANCHORAGE (B4)

NOT TO SCALE

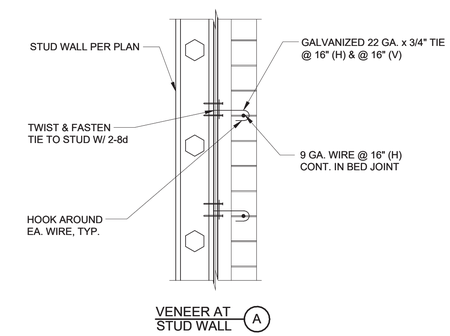

VENEER AT STUD WALL (A)

BRICK VENEER ANCHORAGE (B5)

NOT TO SCALE

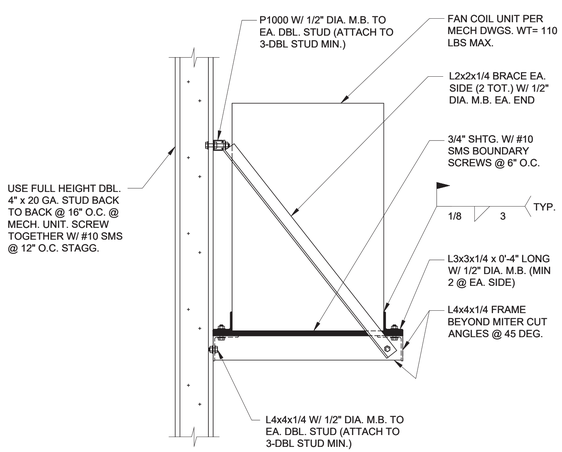

SECTION A-A

FAN COIL UNIT PLATFORM (A2)

NOT TO SCALE

BOTTOM TRACK FASTENER SCHEDULE	
EXTERIOR WALLS	1/2" DIA. EXP. ANCHOR @ 4'-0" MAX. 3 1/4" MIN. EMBEDMENT 1/2" DIA. CAST IN PLACE ANCHORS W/ 7" EMBEDMENT MAY BE USED AT CONTRACTOR'S OPTION
INTERIOR PARTITIONS TYPICALLY	0.157" DIA. P.A.F. W/ 1" EMBED. @ 32" O.C. OR 3/8" DIA. EXP. ANCHOR @ 48" O.C. 2 1/4" MIN. EMBEDMENT
INTERIOR PARTITIONS ADJACENT TO DEPRESSIONS OR ON CURBS	3/8" DIA. EXP. ANCHOR @ 48" O.C. 2" MIN. EMBEDMENT

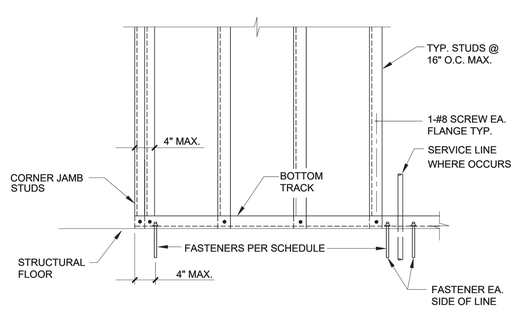

ELEVATION

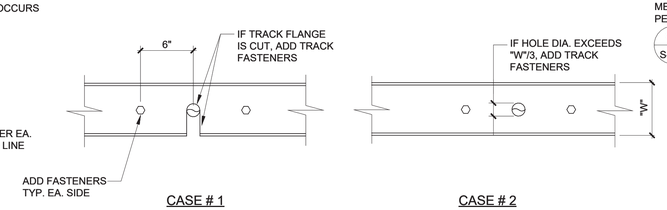

CASE # 1 CASE # 2

PLAN

TYPICAL BOTTOM TRACK ANCHORAGE SCHED (USE FOR METAL BUILDING) (A5)

NOT TO SCALE

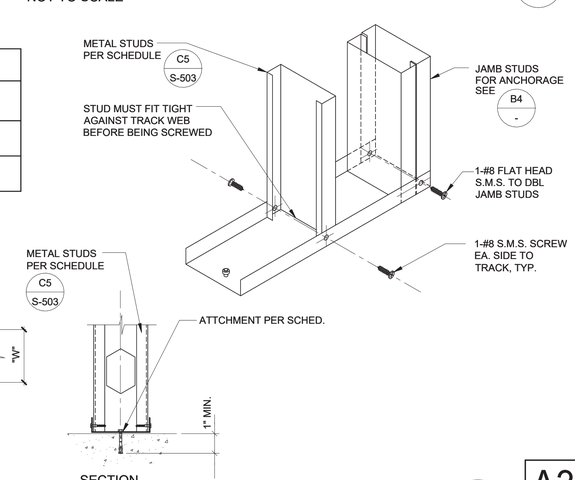

SECTION

SYM	DESCRIPTION	DATE	APPR

NAVFAC

NORTH CAROLINA PROFESSIONAL ENGINEER SEAL 032586 08 MAY 2026 LUCAS G. A. GELO

SEAL

kaydos-daniels engineers, pllc
718 w lane st
raleigh nc 27603
nc firm license #P-0279
T 919 828 4966
F 919 828 4967
www.kaydos-daniels.com
A/E INFO

APPROVED
James E. Drahos, P.E.
FOR COMMANDER NAVFAC 5/13/2026
ACTIVITY

SATISFACTORY TO

DES	LGG	DRW	HON	CHK	LGG
PM/DM	SGL/MDM				
BRANCH MANAGER	CWJ				
CHIEF ENG/ARCH	JWJ				
FIRE PROTECTION	HPN				

DEPARTMENT OF THE NAVY
NAVAL FACILITIES ENGINEERING SYSTEMS COMMAND ~ MIDATLANTIC
1ST MARINE DIVISION
MARINE CORPS BASE
NAVAL FACILITIES ENGINEERING COMMAND
NAVAL STATION - NORFOLK, VA.
CAMP LEJEUNE, NC

P-1550 SOF MARINE RAIDER COMPANY / TEAM FACILITIES

GENERAL CONSTRUCTION DETAILS

SCALE: AS INDICATED
EPROJECT NO.: 1701820
CONSTR. CONTR. NO.

NAVFAC DRAWING NO.
12903757
SHEET 15 OF 121
S-504

A3
CO STG

FINAL SUBMITTAL

DRAWFORM REVISION: 25 AUGUST 2020

C:\Users\henry.KAYDOS-DANIELS\Documents\P1550 Structure 2023_A3_honewell.rvt
5/6/2026 3:39:03 PM

File
Path:
Date:

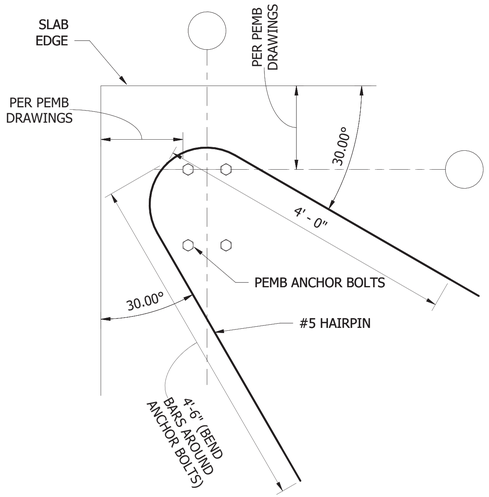

C1 DETAIL
SCALE: 1" = 1'-0"

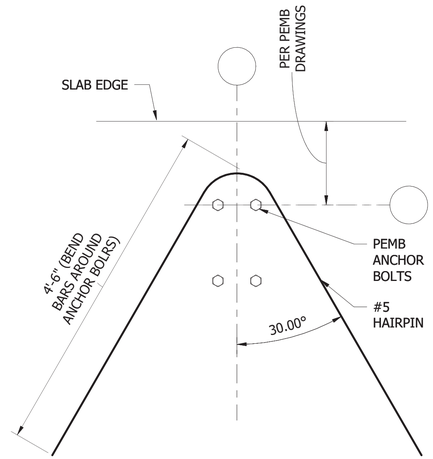

C2 DETAIL
SCALE: 1" = 1'-0"

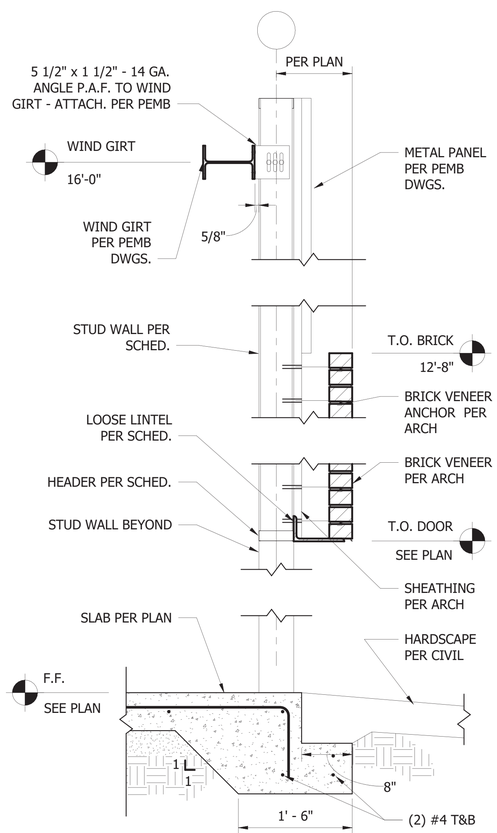

A1 DETAIL
SCALE: 1" = 1'-0"

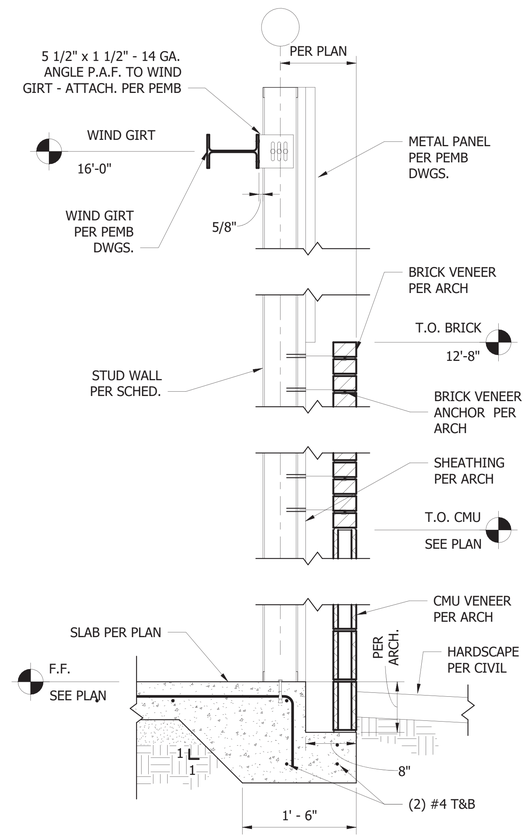

A2 DETAIL
SCALE: 1" = 1'-0"

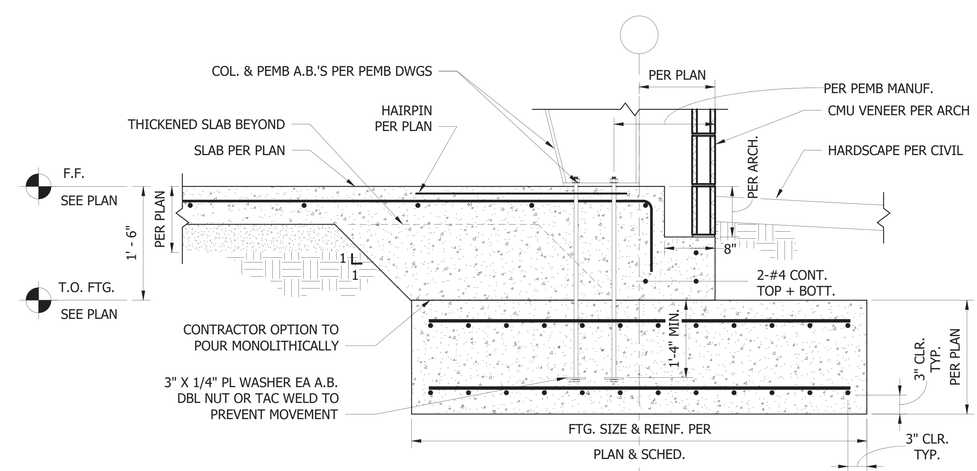

A3 DETAIL
SCALE: 1" = 1'-0"

SYM	DESCRIPTION	DATE	APPR

NAVFAC

NORTH CAROLINA PROFESSIONAL ENGINEER SEAL 032586 08 MAY 2026 LUCAS G. A. GELO

SEAL

kaydos-daniels engineers, plc
718 w lane st
raleigh nc 27603
nc firm license #P-0279
T 919 828 4966
F 919 828 4967
www.kaydos-daniels.com

A/E INFO

APPROVED
JOHN E. HOWE, CAPT, CEC, USN
FOR COMMANDER NAVFAC 5/13/2026

ACTIVITY

SATISFACTORY TO

DES	LGG	DRW	HON	CHK	LGG
PM/DM	SGL/MDM				
BRANCH MANAGER	CWJ				
CHIEF ENG/ARCH	JWJ				
FIRE PROTECTION	HPN				

DEPARTMENT OF THE NAVY
NAVAL FACILITIES ENGINEERING SYSTEMS COMMAND ~ MIDLANTIC
1TT MARINE
MARINE CORPS BASE

NAVAL FACILITIES ENGINEERING COMMAND
NAVAL STATION - NORFOLK, VA.
CAMP LEJEUNE, NC

P-1550 SOF MARINE RAIDER COMPANY / TEAM FACILITIES

DETAILS

SCALE: AS INDICATED
EPROJECT NO.: 1701820
CONSTR. CONTR. NO.

NAVFAC DRAWING NO.
12903758
SHEET 16 OF 121

A3
CO STG
S-511

FINAL SUBMITTAL

DRAWFORM REVISION: 25 AUGUST 2020

C:\Users\henry.KAYDOS-DANIELS\Documents\P1550 Structure 2023_A3_honewell.rvt
5/6/2026 3:39:04 PM

File Path:
Date:

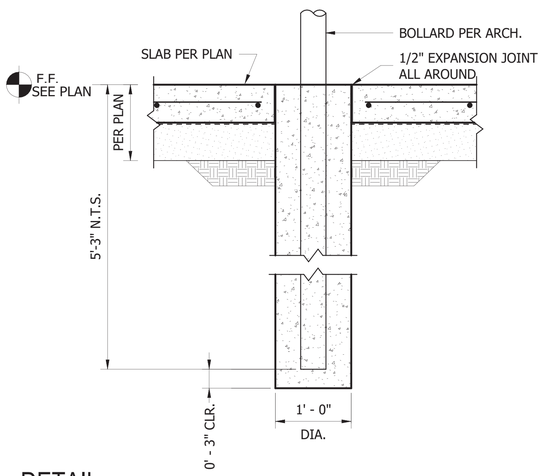

B1 DETAIL
SCALE: 1" = 1'-0"

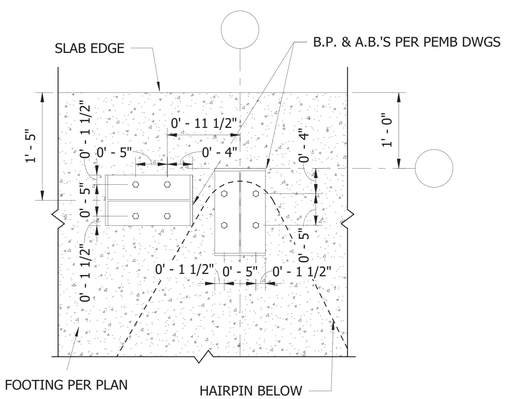

B2 DETAIL
SCALE: 1" = 1'-0"

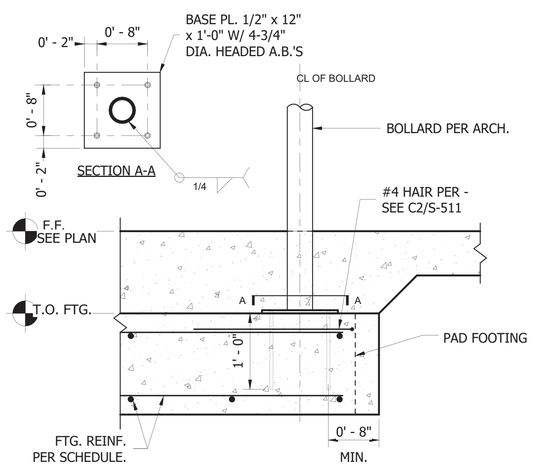

A1 DETAIL
SCALE: 1" = 1'-0"

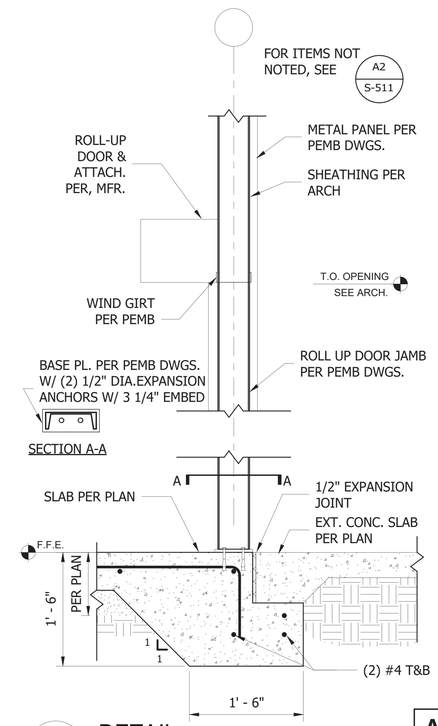

A5 DETAIL
SCALE: 1" = 1'-0"

SYM	DESCRIPTION	DATE	APPR

NAVFAC

NORTH CAROLINA PROFESSIONAL ENGINEER SEAL 032586 08 MAY 2026 LUCAS G. A. GELO

SEAL

kaydos-daniels engineers, plc
718 w lane st
raleigh nc 27603
nc firm license #P-0279
T 919 828 4966
F 919 828 4967
www.kaydos-daniels.com

A/E INFO

APPROVED
FOR COMMANDER NAVFAC 5/13/2026
ACTIVITY

SATISFACTORY TO

DES	LGG	DRW	HON	CHK	LGG
PM/DM	SGL/MDM				
BRANCH MANAGER	CWJ				
CHIEF ENG/ARCH	JWJ				
FIRE PROTECTION	HPN				

DEPARTMENT OF THE NAVY
NAVAL FACILITIES ENGINEERING SYSTEMS COMMAND ~ MIDATLANTIC
NAVAL FACILITIES ENGINEERING COMMAND
NAVAL STATION - NORFOLK, VA.
1ST MARINE DIVISION
MARINE CORPS BASE
CAMP LEJEUNE, NC

P-1550 SOF MARINE RAIDER
COMPANY / TEAM FACILITIES

DETAILS

SCALE: AS INDICATED
EPROJECT NO.: 1701820
CONSTR. CONTR. NO.

NAVFAC DRAWING NO.
12903759
SHEET 17 OF 121
S-512

A3
CO STG

FINAL SUBMITTAL

DRAWFORM REVISION: 25 AUGUST 2020

C:\Users\henry.KAYDOS-DANIELS\Documents\P1550 Structure 2023_A3_honewell.rvt
5/6/2026 3:39:04 PM

File Path:
Date:

SYMBOL LEGEND

DRAWING TAG
- XX — DETAIL/SECTION/ELEVATION TITLE — LOCATION COORDINATE
- DETAIL TITLE
- SCALE: X" = 1'-0" — SCALE

NORTH ARROW
- N — PROJECT NORTH
- TRUE NORTH

EXTERIOR ELEVATION TAG
- 1 / A-101 — LOCATION COORDINATE
- SHEET IDENTIFICATION

INTERIOR ELEVATION TAG
- XX / XX / A-101 / XX / XX — SHEET IDENTIFICATION
- LOCATION COORDINATE TYPICAL

SECTION TAG
- 1 / A-101 — LOCATION COORDINATE
- SHEET IDENTIFICATION

BUILDING SECTION TAG
- 1 / A-101 — LOCATION COORDINATE TYPICAL
- 1 / A-101 — SHEET IDENTIFICATION TYPICAL

DETAIL TAG
- 1 / A-101 — LOCATION COORDINATE
- SHEET IDENTIFICATION

COLUMN GRID
- 0 — COLUMN GRID NUMBER IDENTIFICATION
- X — COLUMN GRID LETTER IDENTIFICATION

DEMOLITION KEYNOTE TAG
- 1 — KEYNOTE NUMBER

CONSTRUCTION KEYNOTE TAG
- 1 — KEYNOTE NUMBER

ELEVATION BENCHMARK
- 0'- 0" — ELEVATION DIMENSION
- ELEV — ELEVATION DESCRIPTION

WALL TYPE TAG
- A — WALL TYPE IDENTIFIER

WINDOW TAG
- 00 — WINDOW TYPE IDENTIFIER

DOOR TAG
- 101A — DOOR NUMBER

ROOM NAME TAG
- Room Name — ROOM NAME
- 101 — ROOM NUMBER

DIMENSIONS
- FACE OF ELEMENT BEING DIMENSIONED (WALL, FRAME, ETC.)
- CENTERLINE OF ELEMENT BEING DIMENSIONED (WALL, FRAME, ETC.)

ABBREVIATIONS

ACAIR	CONDITIONING	FE	FIRE EXTINGUISHER	SD	SMOKE DETECTOR
AB	ANCHOR BOLT	FEC	FIRE EXTINGUISHER CABINET	SECT	BUILDING SECTION
ADA	AMERICANS WITH DISABILITIES ACT	FFE	FINISHED FLOOR ELEVATION	SHT	SHEET
ABA	ARCHITECTURAL BARRIERS ACT	FG	FINISHED GRADE	SIM	SIMILAR
AFF	ABOVE FINISH FLOOR	FIN	FINISH	SQ	SQUARE
AHJ	AUTHORITY HAVING JURISDICTION	FIXT	FIXTURE	SS	STAINLESS STEEL
AHU	AIR HANDLING UNIT	FLR	FLOOR	STD	STANDARD
ALUM	ALUMINUM	FHB	FREEZE-PROOF HOSE BIBB	T&B	TOP AND BOTTOM
ALT	ALTERNATE	FT	FEET	T&G	TONGUE AND GROOVE
ATC	ACOUSTICAL TILE CEILING	GA	GAGE	TLT	TOILET
AUX	AUXILIARY	GALV	GALVANIZED	TOS	TOP OF STEEL
BD	BOARD	GPM	GALLONS PER MINUTE	TYP	TYPICAL
BLDG	BUILDING	GWB	GYPSUM WALLBOARD	UH	UNIT HEATER
BL	BUILDING LINE	GYP	GYPSUM	UNO	UNLESS NOTED OTHERWISE
BRG	BEARING	HB	HOSE BIBB	VAV	VARIABLE AIR VOLUME
CFM	CUBIC FEET PER MINUTE	HM	HOLLOW METAL	VCT	VINYL COMPOSITION TILE
CI	CURB INLET / CAST IRON	ID	INSIDE DIAMETER	W/	WITH
CJ	CONTROL JOINT	IN	INCH	WD	WOOD
CL	CENTER LINE	INSUL	INSULATION	WH	WATER HEATER
CLG	CEILING	INT	INTERIOR		
CLR	CLEAR	JT	JOINT		
CM	CENTIMETER	LAV	LAVATORY		
COL	COLUMN	LF	LINEAR FEET		
CONC	CONCRETE	LL	LIVE LOAD		
CPT	CARPET	LVT	LUXURY VINYL TILE		
CY	CUBIC YARD	MAX	MAXIMUM		
DF	DRINKING FOUNTAIN	MECH	MECHANICAL		
DIA	DIAMETER	MFR	MANUFACTURER		
DIAG	DIAGONAL	MIN	MINIMUM		
DL	DEAD LOAD	MO	MASONRY OPENING		
DN	DOWN	NEC	NATIONAL ELECTRICAL CODE		
DS	DOWNSPOUT	NIC	NOT IN CONTRACT		
DWG	DRAWING	NO	NUMBER		
EA	EACH / EXHAUST AIR	NTS	NOT TO SCALE		
EJ	EXPANSION JOINT	OC	ON CENTER		
EJ/CJ	EXPANSION JOINT & CONTROL JOINT	OPG	OPENING		
ELEV	ELEVATION, ELEVATOR	PWD	PLYWOOD		
ELEC	ELECTRIC(AL)	PR	PAIR		
EQ	EQUAL	PSF	POUNDS PER SQUARE FOOT		
EQUP	EQUIPMENT	PSI	POUNDS PER SQUARE INCH		
EW	EACH WAY	QT	QUARRY TILE		
EX	EXHAUST	RB	RESILIENT BASE		
EXTG	EXISTING	RD	ROOF DRAIN		
EXT	EXTERIOR	REQ	REQUIRED		
FA	FIRE ALARM	REV READ	REVERSE READ		
FACP	FIRE ALARM CONTROL PANEL	RM	ROOM		
FAAP	FIRE ALARM ANNUNCIATOR PANEL	RO	ROUGH OPENING		
FCU	FAN COIL UNIT	ROW	RIGHT OF WAY		
FD	FLOOR DRAIN				

SYM	DESCRIPTION	DATE	APPR

NAVFAC

DARDEN J. EURE III — REGISTERED ARCHITECT — 8840 — NORTH CAROLINA — NEW BERN NC

08 MAY 2026 SEAL

mbf architects pa
317-C Pollock Street | New Bern, NC 28560
252.637.6373 | mbfarchitects.com
A/E INFO

APPROVED
CHIEF ENGINEER OR OFFICER
FOR COMMANDER NAVFAC 5/13/2026
ACTIVITY

SATISFACTORY TO

DES	REL	DRW	ESS	CHK	DJE,III
PM/DM					SGL/MDM
BRANCH MANAGER					DJD
CHIEF ENG/ARCH					JWJ
FIRE PROTECTION					HPN

DEPARTMENT OF THE NAVY
NAVAL FACILITIES ENGINEERING SYSTEMS COMMAND
MIDLANT DC CORE
MARINE CORPS BASE
NAVAL FACILITIES ENGINEERING SYSTEMS COMMAND ~ MIDATLANTIC
NAVAL STATION - NORFOLK, VA
CAMP LEJEUNE, NC
P-1550 SOF MARINE RAIDER BATTALION / COMPANY / TEAM FACILITIES
SYMBOL LEGEND AND ABBREVIATIONS

SCALE:	AS INDICATED
EPROJECT NO.:	1701820
CONSTR. CONTR. NO.	

MBF ARCHITECTS P.A. — REGISTERED ARCHITECTURAL CORPORATION — CERT. NO. 50679 — NORTH CAROLINA — NEW BERN N.C.

A3
CO STG

NAVFAC DRAWING NO.
12903760
SHEET 18 OF 122
A-001

FINAL SUBMITTAL

DRAWFORM REVISION: 25 AUGUST 2020

S:\projects\2021\2122 MIDLANT CL P-1550 SOF Marine Battalion CompanyTeam Facilities\2122 Design\2122 Dwgs\2122 ARCH 2023_A3.rvt
5/9/2026 1:03:20 PM
File
Print

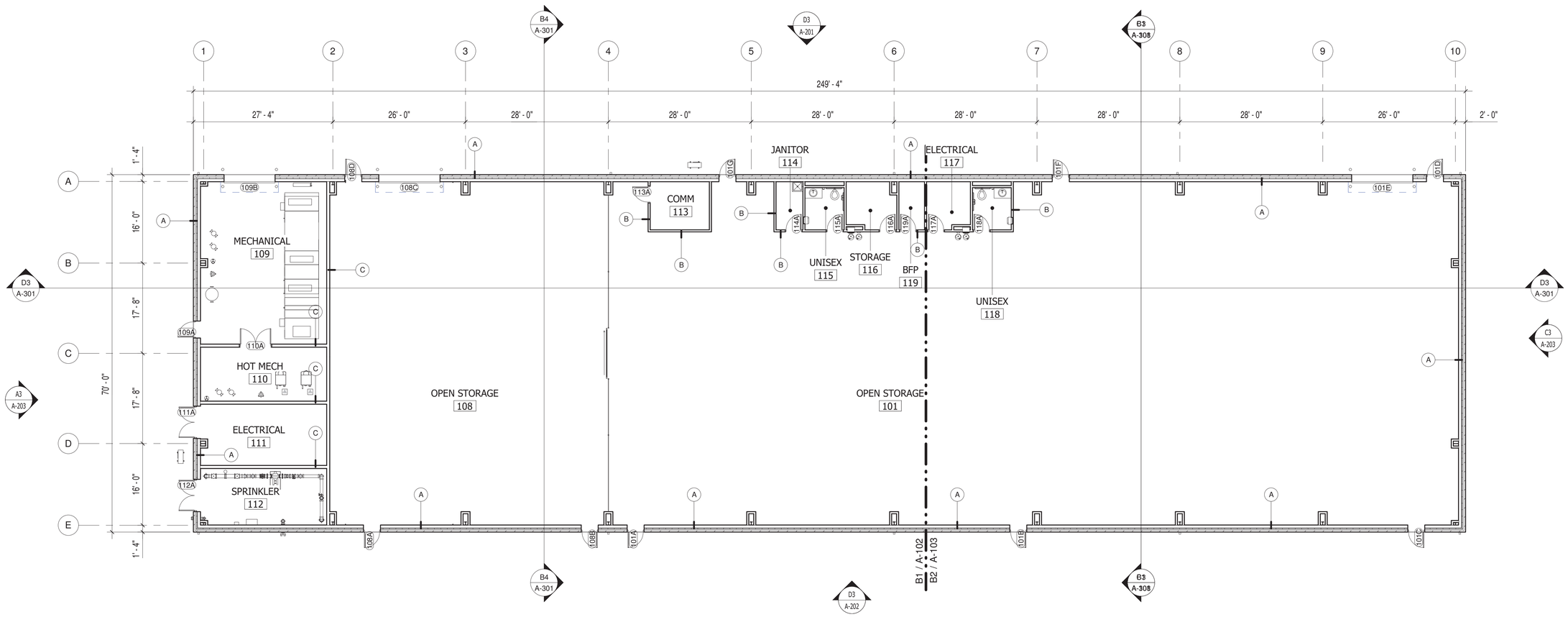

B3 FLOOR PLAN - STORAGE BUILDING

SCALE: 3/32" = 1'-0"

SQUARE FOOTAGE TABULATION	
CONDITIONED AREA	17,453 SF
COVERED EXTERIOR AREA (/2)	122 SF / 2 = 61 SF
GROSS AREA TOTAL	17,514 SF

GENERAL CONSTRUCTION NOTES

1. REFERENCE SHEET A-001 FOR SYMBOL LEGEND
2. REFERENCE SHEET A-501 FOR WALL TYPES
3. REFERENCE SHEET A-601 FOR DOOR AND FRAME SCHEDULE
4. REFERENCE SHEET A-60X FOR WINDOW SCHEDULE
5. REFERENCE INTERIOR DESIGN DRAWINGS FOR FINISH SCHEDULE
6. REFERENCE INTERIORS DRAWINGS FOR CASEWORK DIMENSIONS AND DETAILS
7. REFERENCE THE LIFE SAFETY DRAWINGS FOR LOCATIONS OF RATED WALLS AND SMOKE PARTITIONS
8. REFERENCE SHEET A-104 FOR AIR AND MOISTURE BARRIER PLAN AND DETAILS
9. DIMENSIONS ARE TAKEN FROM FACE OF METAL STUD AND FACE OF CMU
10. PROVIDE TREATED WOOD BLOCKING TO SUPPORT WALL MOUNTED AND RECESSED FIXTURES, ACCESSORIES, FLAT PANEL DISPLAY MOUNTS, ETC. FOLLOW MANUFACTURERS RECOMMENDATIONS
11. SLOPE SETTING BED FLOORS 1/8" MINIMUM TO ALL FLOOR DRAINS
12. PROVIDE FULL HEIGHT STAINLESS STEEL CORNER GUARDS AT EXPOSED CORNERS OF GYPSUM PARTITIONS
13. PROVIDE FIRE RATED PLYWOOD BACKBOARD AT COMM ROOMS
14. PROVIDE CONCRETE SPLASH BLOCKS AT ALL DOWNSPOUT LOCATIONS WHERE NOT CONNECTED TO STORM DRAIN PIPING

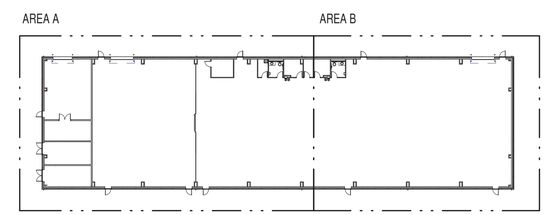

KEY PLAN

1" = 40'

GRAPHIC SCALE: 1/16"=1'-0"

16' 0 8' 16' 32'

GRAPHIC SCALE: 1"=40'

40' 0 40' 80'

MBF ARCHITECTS P.A. REGISTERED ARCHITECTURAL CORPORATION CERT. NO. 50679 NORTH CAROLINA NEW BERN, N.C.

A3
CO STG

APPR	DATE	DESCRIPTION	SYM

NAVFAC

DARDEN J. EURE, III REGISTERED ARCHITECT 8840 NORTH CAROLINA NEW BERN NC

08 MAY 2026 SEAL

mbf architects pa
317-C Pollock Street | New Bern, NC 28560
252.637.6373 | mbfarchitects.com
A/E INFO

APPROVED
FOR COMMANDER NAVFAC 5/13/2026
ACTIVITY

SATISFACTORY TO

DES	REL	DRW	ESS	CHK	DJE,III
PM/DM					SGL/MDM
BRANCH MANAGER					DJD
CHIEF ENG/ARCH					JWJ
FIRE PROTECTION					HPN

DEPARTMENT OF THE NAVY
NAVAL FACILITIES ENGINEERING SYSTEMS COMMAND
MIDLANT DC CORE
MARINE CORPS BASE

NAVAL FACILITIES ENGINEERING SYSTEMS COMMAND ~ MIDATLANTIC
NAVAL STATION - NORFOLK, VA.
CAMP LEJEUNE, NC

P-1550 SOF MARINE RAIDER
BATTALION / COMPANY / TEAM FACILITIES

COMPREHENSIVE FLOOR PLAN

SCALE:	AS INDICATED
EPROJECT NO.:	1701820
CONSTR. CONTR. NO.	
NAVFAC DRAWING NO.	12903761
SHEET	19 OF 122

A-101

FINAL SUBMITTAL

DRAWFORM REVISION: 25 AUGUST 2020

S:\projects\2021\2122 MIDLANT CL P-1550 SOF Marine Battalion Company\Team Facilities\2122 Design\2122 Dwgs\2122 ARCH 2023_A3.rvt
5/9/2026 1:03:22 PM
File
Print

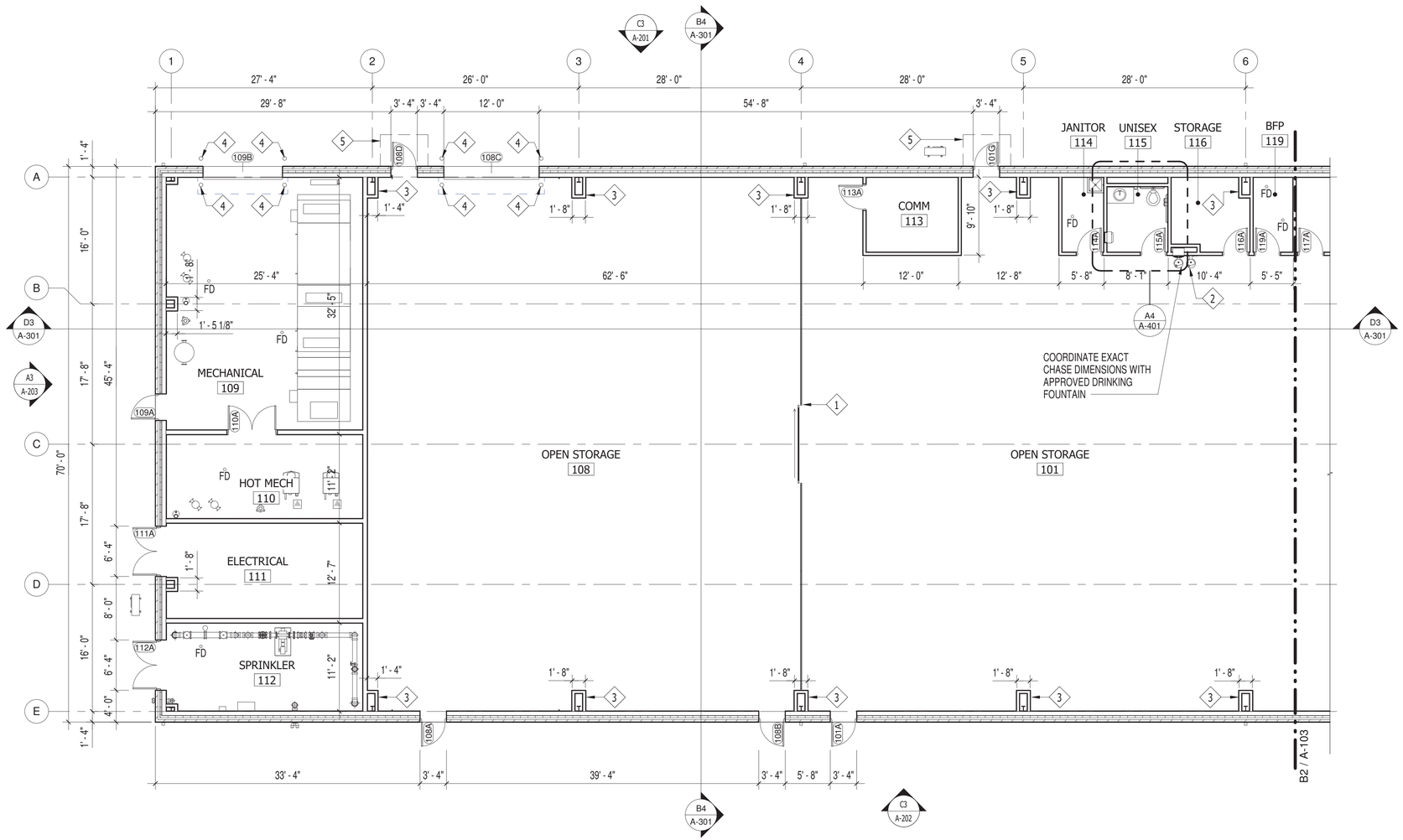

B1 FLOOR PLAN - AREA A

SCALE: 1/8" = 1'-0"

CONSTRUCTION KEYNOTES

1. WIRE MESH PARTITION. EXTEND TO THE UNDERSIDE OF THE STRUCTURE ABOVE
2. ACCESSIBLE ELECTRIC WATER COOLER
3. COLUMN ENCLOSURE. SEE DETAIL
4. BOLLARD
5. METAL BUILDING CANOPY ABOVE

GENERAL CONSTRUCTION NOTES

1. REFERENCE SHEET A-001 FOR SYMBOL LEGEND
2. REFERENCE SHEET A-501 FOR WALL TYPES
3. REFERENCE SHEET A-601 FOR DOOR AND FRAME SCHEDULE
4. REFERENCE SHEET A-60X FOR WINDOW SCHEDULE
5. REFERENCE INTERIOR DESIGN DRAWINGS FOR FINISH SCHEDULE
6. REFERENCE INTERIORS DRAWINGS FOR CASEWORK DIMENSIONS AND DETAILS
7. REFERENCE THE LIFE SAFETY DRAWINGS FOR LOCATIONS OF RATED WALLS AND SMOKE PARTITIONS
8. REFERENCE SHEET A-104 FOR AIR AND MOISTURE BARRIER PLAN AND DETAILS
9. DIMENSIONS ARE TAKEN FROM FACE OF METAL STUD AND FACE OF CMU
10. PROVIDE TREATED WOOD BLOCKING TO SUPPORT WALL MOUNTED AND RECESSED FIXTURES, ACCESSORIES, FLAT PANEL DISPLAY MOUNTS, ETC. FOLLOW MANUFACTURERS RECOMMENDATIONS
11. SLOPE SETTING BED FLOORS 1/8" MINIMUM TO ALL FLOOR DRAINS
12. PROVIDE FULL HEIGHT STAINLESS STEEL CORNER GUARDS AT EXPOSED CORNERS OF GYPSUM PARTITIONS
13. PROVIDE FIRE RATED PLYWOOD BACKBOARD AT COMM ROOMS
14. PROVIDE CONCRETE SPLASH BLOCKS AT ALL DOWNSPOUT LOCATIONS WHERE NOT CONNECTED TO STORM DRAIN PIPING

KEY PLAN 1" = 40'

GRAPHIC SCALE: 1/8"=1'-0"

GRAPHIC SCALE: 1"=40'

SYM	DESCRIPTION	DATE	APPR

NAVFAC

DARDEN J. EURE III REGISTERED ARCHITECT 8840 NORTH CAROLINA NEW BERN NC

08 MAY 2026 SEAL

mbf architects pa

317-C Pollock Street | New Bern, NC 28560
252.637.6373 | mbfarchitects.com

A/E INFO

APPROVED

FOR COMMANDER NAVFAC 5/13/2026

ACTIVITY

SATISFACTORY TO

DES	REL	DRW	ESS	CHK	DJE,III
PM/DM					SGL/MDM
BRANCH MANAGER					DJD
CHIEF ENG/ARCH					JWJ
FIRE PROTECTION					HPN

DEPARTMENT OF THE NAVY
NAVAL FACILITIES ENGINEERING SYSTEMS COMMAND
MIDLANT DC CORE
MARINE CORPS BASE

NAVAL FACILITIES ENGINEERING SYSTEMS COMMAND ~ MIDATLANTIC
NAVAL STATION - NORFOLK, VA
CAMP LEJEUNE, NC

P-1550 SOF MARINE RAIDER BATTALION / COMPANY / TEAM FACILITIES

FLOOR PLAN - AREA A

SCALE: AS INDICATED

EPROJECT NO.: 1701820

CONSTR. CONTR. NO.

NAVFAC DRAWING NO. 12903762

SHEET 20 OF 122

A3 CO STG

A-102

FINAL SUBMITTAL

DRAWFORM REVISION: 25 AUGUST 2020

MBF ARCHITECTS P.A. REGISTERED ARCHITECTURAL CORPORATION CERT. NO. 50679 NORTH CAROLINA NEW BERN N.C.

S:\projects\2021\2122 MIDLANT CL P-1550 SOF Marine Battalion Company Team Facilities\2122 Design\2122 Dwgs\2122 ARCH 2023_A3.rvt

File
Print 5/9/2026 1:03:24 PM

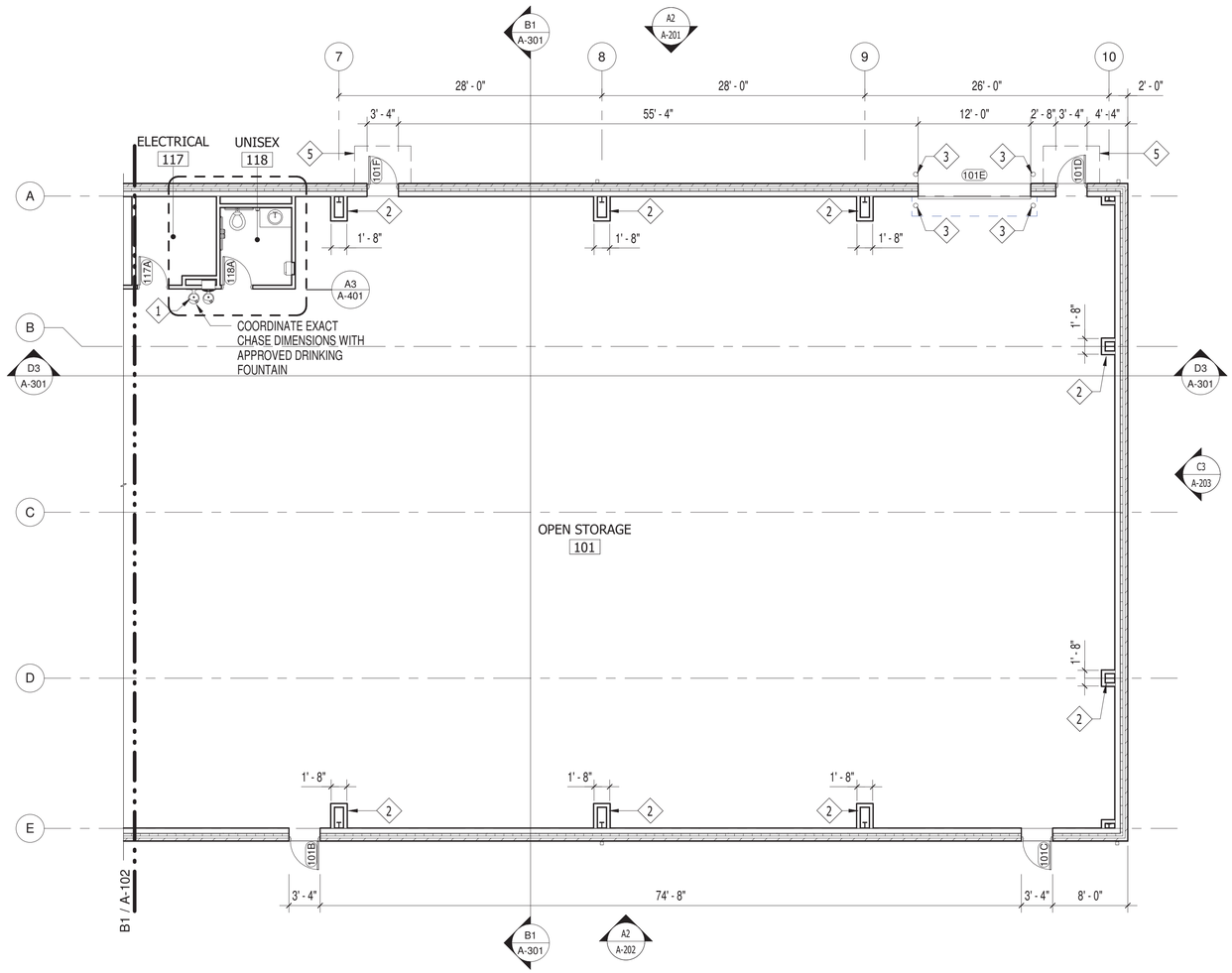

B2 FLOOR PLAN - AREA B

SCALE: 1/8" = 1'-0"

CONSTRUCTION KEYNOTES

1. ACCESSIBLE ELECTRIC WATER COOLER
2. COLUMN ENCLOSURE. SEE DETAIL
3. BOLLARD

GENERAL CONSTRUCTION NOTES

1. REFERENCE SHEET A-001 FOR SYMBOL LEGEND
2. REFERENCE SHEET A-501 FOR WALL TYPES
3. REFERENCE SHEET A-601 FOR DOOR AND FRAME SCHEDULE
4. REFERENCE SHEET A-60X FOR WINDOW SCHEDULE
5. REFERENCE INTERIOR DESIGN DRAWINGS FOR FINISH SCHEDULE
6. REFERENCE INTERIORS DRAWINGS FOR CASEWORK DIMENSIONS AND DETAILS
7. REFERENCE THE LIFE SAFETY DRAWINGS FOR LOCATIONS OF RATED WALLS AND SMOKE PARTITIONS
8. REFERENCE SHEET A-104 FOR AIR AND MOISTURE BARRIER PLAN AND DETAILS
9. DIMENSIONS ARE TAKEN FROM FACE OF METAL STUD AND FACE OF CMU
10. PROVIDE TREATED WOOD BLOCKING TO SUPPORT WALL MOUNTED AND RECESSED FIXTURES, ACCESSORIES, FLAT PANEL DISPLAY MOUNTS, ETC. FOLLOW MANUFACTURERS RECOMMENDATIONS
11. SLOPE SETTING BED FLOORS 1/8" MINIMUM TO ALL FLOOR DRAINS
12. PROVIDE FULL HEIGHT STAINLESS STEEL CORNER GUARDS AT EXPOSED CORNERS OF GYPSUM PARTITIONS
13. PROVIDE FIRE RATED PLYWOOD BACKBOARD AT COMM ROOMS
14. PROVIDE CONCRETE SPLASH BLOCKS AT ALL DOWNSPOUT LOCATIONS WHERE NOT CONNECTED TO STORM DRAIN PIPING

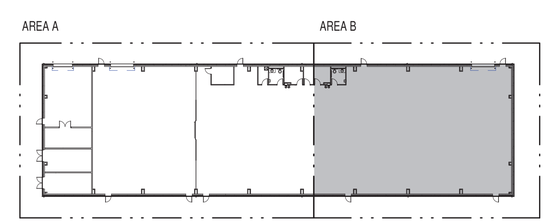

KEY PLAN 1" = 40'

GRAPHIC SCALE: 1/8"=1'-0" 8' 0 4' 8' 16'

GRAPHIC SCALE: 1"=40' 40' 0 40' 80'

MBF ARCHITECTS P.A. REGISTERED ARCHITECTURAL CORPORATION CERT. NO. 50679 NORTH CAROLINA NEW BERN N.C.

SYM	DESCRIPTION	DATE	APPR

NAVFAC

DARDEN J. EURE, III REGISTERED ARCHITECT 8640 NORTH CAROLINA NEW BERN NC

08 MAY 2026 SEAL

mbf architects pa
317-C Pollock Street | New Bern, NC 28560
252.637.6373 | mbfarchitects.com
A/E INFO

APPROVED
SIGNATURE OF CO OR OIC
FOR COMMANDER NAVFAC 5/13/2026
ACTIVITY

SATISFACTORY TO

DES	REL	DRW	ESS	CHK	DJE,III
PM/DM					SGL/MDM
BRANCH MANAGER					DJD
CHIEF ENG/ARCH					JWJ
FIRE PROTECTION					HPN

NAVAL FACILITIES ENGINEERING SYSTEMS COMMAND
NAVAL FACILITIES ENGINEERING SYSTEMS COMMAND ~ MIDATLANTIC
NAVAL STATION - NORFOLK, VA
CAMP LEJEUNE, NC
P-1550 SOF MARINE RAIDER BATTALION / COMPANY / TEAM FACILITIES
FLOOR PLAN - AREA B

DEPARTMENT OF THE NAVY
NAVAL FACILITIES ENGINEERING SYSTEMS COMMAND ~ MIDATLANTIC
MIDLANT DC CORE
MARINE CORPS BASE

SCALE:	AS INDICATED
EPROJECT NO.:	1701820
CONSTR. CONTR. NO.	
NAVFAC DRAWING NO.	12903763
SHEET	21 OF 122

A3
CO STG
A-103

FINAL SUBMITTAL

DRAWFORM REVISION: 25 AUGUST 2020

S:\projects\2021\2122 MIDLANT CL P-1550 SOF Marine Battalion CompanyTeam Facilities\2122 Design\2122 Dwgs\2122 ARCH 2023_A3.rvt
5/9/2026 1:03:25 PM
File
Print

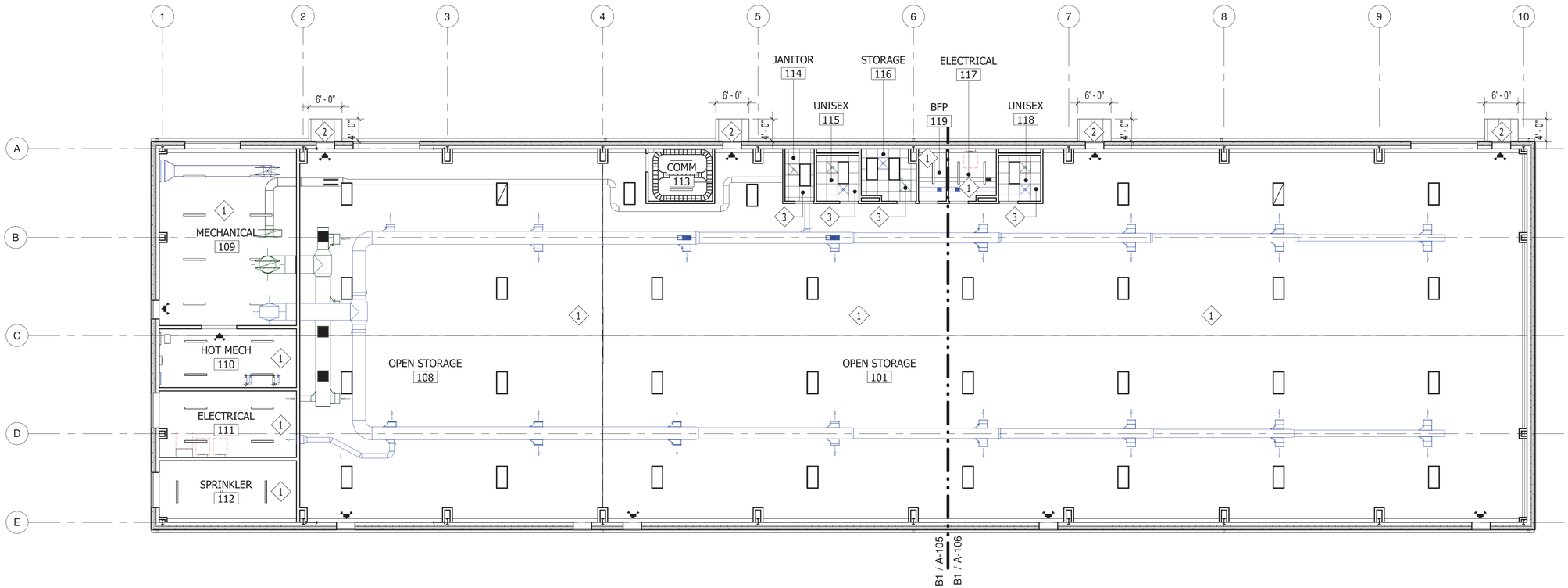

B1 COMPREHENSIVE REFLECTED CEILING PLAN

SCALE: 3/32" = 1'-0"

GENERAL CONSTRUCTION NOTES

1. REFERENCE SHEET A-001 FOR SYMBOL LEGEND
2. CEILING HEIGHT ELEVATIONS ARE NOTED ABOVE FINISHED FLOOR
3. ALL LIGHT FIXTURES, MECHANICAL EQUIPMENT AND FIRE SPRINKLERS ARE SHOWN FOR REFERENCE ONLY. REFER TO ELECTRICAL. MECHANICAL AND FIRE PROTECTION DRAWINGS FOR SIZES, LOCATIONS AND MOUNTING DETAILS
4. LIGHTING/EQUIPMENT/CEILING MOUNTED DEVICES SHALL BE LOCATED AT THE CENTER OR CENTERLINE OF ACOUSTICAL CEILING TILES OR OPEN BAYS - TYPICAL UNLESS OTHERWISE NOTED
5. PROVIDE CEILING MOUNTED ILLUMINATED EXIT SIGNS IN ROOMS WITH ACOUSTICAL CEILING TILE OR GYPSUM BOARD CEILING 12'-0" AFF OR LOWER. PROVIDE WALL MOUNTED ILLUMINATED EXIT SIGNS IN OPEN TO STRUCTURE ROOMS 12'-0" MINIMUM CLEAR OR LOWER. COORDINATE EXIT SIGN LOCATIONS WITH ARCHITECT IN AREAS THAT ARE OPEN TO STRUCTURE WITH A MINIMUM CLEARANCE HIGHER THAN 12'-0"

REFLECTED CEILING PLAN LEGEND

- 2' X 4' LIGHT FIXTURE
- 4' UTILITY FIXTURE
- RETURN GRILLE
- EXHAUST FAN GRILLE
- CEILING MOUNTED EMERGENCY WALLPACK

CONSTRUCTION KEYNOTES

1. OPEN TO UNDERSIDE OF STRUCTURE ABOVE
2. METAL BUILDING SYSTEM DOOR CANOPY WITH FLUSH METAL SOFFIT. REFERENCE ELEVATIONS AND SECTIONS FOR ADDITIONAL INFORMATION
3. ACOUSTIC TILE CEILING AT 9'-0" ABOVE FINISHED FLOOR
4. WIRE MESH PARTITION. EXTEND TO THE UNDERSIDE OF THE STRUCTURE ABOVE. SEE DETAIL A5/A-504. PROVIDE BLOCK-OUTS FOR MECHANICAL DUCT, FIRE PROTECTION PIPING AND SIMILAR PENETRATIONS.

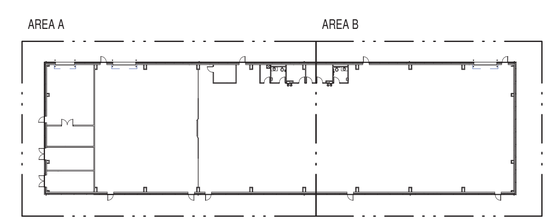

KEY PLAN

1" = 40'

GRAPHIC SCALE: 3/32"=1'-0"

8' 0 8' 16' 24'

GRAPHIC SCALE: 1"=40'

40' 0 40' 80'

MBF ARCHITECTS P.A. REGISTERED ARCHITECTURAL CORPORATION CERT. NO. 50679 NORTH CAROLINA NEW BERN N.C.

A3

CO STG

FINAL SUBMITTAL

SYM	DESCRIPTION	DATE	APPR

NAVFAC

DARDEN J. EURE III REGISTERED ARCHITECT 8640 NORTH CAROLINA NEW BERN NC

08 MAY 2026 SEAL

mbf architects pa

317-C Pollock Street | New Bern, NC 28560
252.637.6373 | mbfarchitects.com

A/E INFO

APPROVED

FOR COMMANDER NAVFAC 5/15/2026

ACTIVITY

SATISFACTORY TO

DES	REL	DRW	ESS	CHK	DJE,III
PM/DM					SGL/MDM
BRANCH MANAGER					DJD
CHIEF ENG/ARCH					JWJ
FIRE PROTECTION					HPN

DEPARTMENT OF THE NAVY
NAVAL FACILITIES ENGINEERING SYSTEMS COMMAND ~ MIDATLANTIC
MIDLANT DC CORE
MARINE CORPS BASE

NAVAL FACILITIES ENGINEERING SYSTEMS COMMAND
NAVAL STATION - NORFOLK, VA
CAMP LEJEUNE, NC

P-1550 SOF MARINE RAIDER
BATTALION / COMPANY / TEAM FACILITIES

COMPREHENSIVE REFLECTED CEILING PLAN

SCALE:	AS INDICATED
EPROJECT NO.:	1701820
CONSTR. CONTR. NO.	
NAVFAC DRAWING NO.	12903764
SHEET	22 OF 122

A-104

DRAWFORM REVISION: 25 AUGUST 2020

S:\projects\2021\2122 MIDLANT CL P-1550 SOF Marine Battalion CompanyTeam Facilities\2122 Design\2122 Dwgs\2122 ARCH 2023_A3.rvt
5/9/2026 1:03:26 PM
File
Print

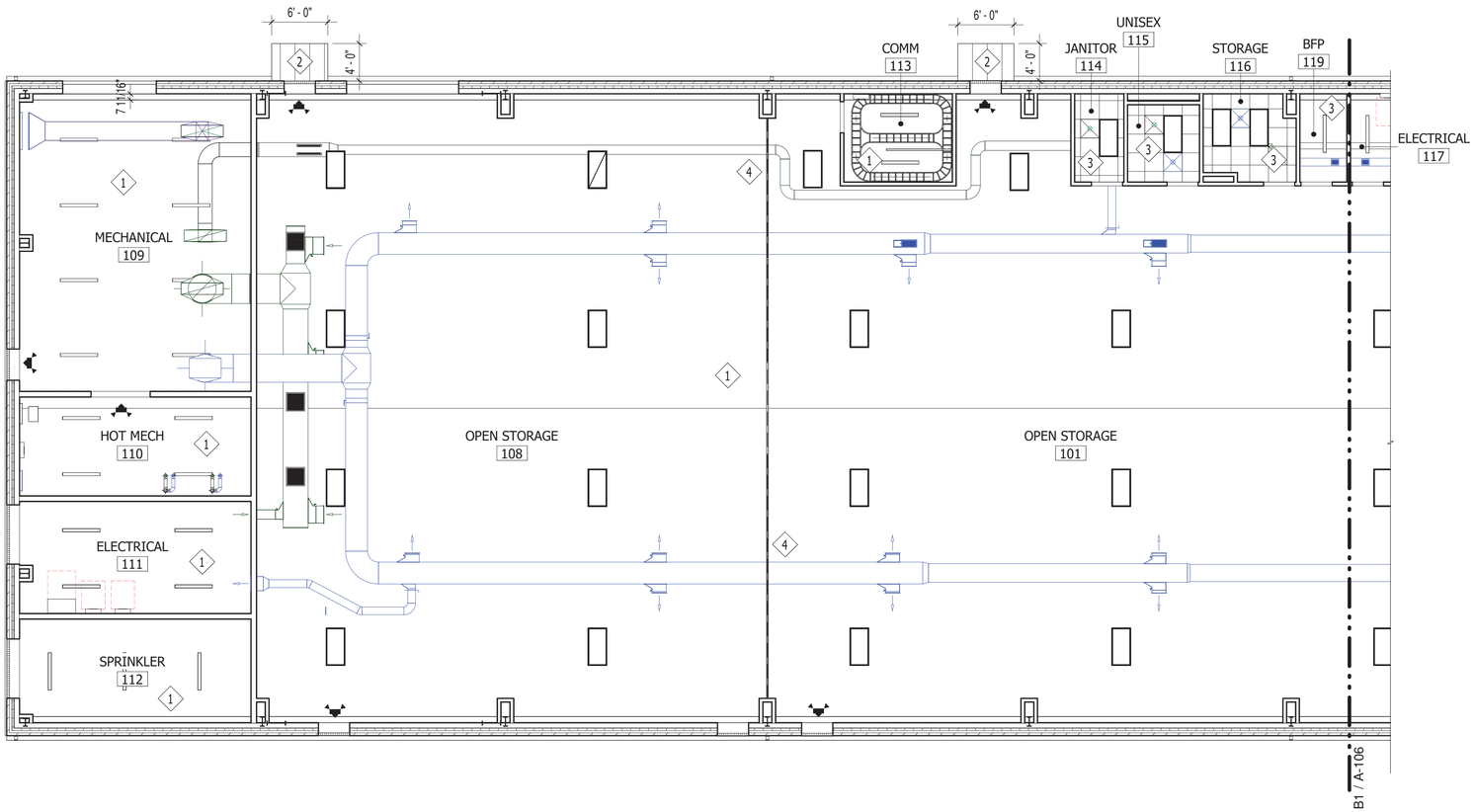

B1 REFLECTED CEILING PLAN - AREA A

SCALE: 1/8" = 1'-0"

CONSTRUCTION KEYNOTES

1. OPEN TO UNDERSIDE OF STRUCTURE ABOVE
2. METAL BUILDING SYSTEM DOOR CANOPY WITH FLUSH METAL SOFFIT. REFERENCE ELEVATIONS AND SECTIONS FOR ADDITIONAL INFORMATION
3. ACOUSTIC TILE CEILING AT 9'-0" ABOVE FINISHED FLOOR
4. WIRE MESH PARTITION. EXTEND TO THE UNDERSIDE OF THE STRUCTURE ABOVE. SEE DETAIL A5/A-504. PROVIDE BLOCK-OUTS FOR MECHANICAL DUCT, FIRE PROTECTION PIPING AND SIMILAR PENETRATIONS.

GENERAL CONSTRUCTION NOTES

1. REFERENCE SHEET A-001 FOR SYMBOL LEGEND
2. CEILING HEIGHT ELEVATIONS ARE NOTED ABOVE FINISHED FLOOR
3. ALL LIGHT FIXTURES, MECHANICAL EQUIPMENT AND FIRE SPRINKLERS ARE SHOWN FOR REFERENCE ONLY. REFER TO ELECTRICAL. MECHANICAL AND FIRE PROTECTION DRAWINGS FOR SIZES, LOCATIONS AND MOUNTING DETAILS
4. LIGHTING/EQUIPMENT/CEILING MOUNTED DEVICES SHALL BE LOCATED AT THE CENTER OR CENTERLINE OF ACOUSTICAL CEILING TILES OR OPEN BAYS - TYPICAL UNLESS OTHERWISE NOTED
5. PROVIDE CEILING MOUNTED ILLUMINATED EXIT SIGNS IN ROOMS WITH ACOUSTICAL CEILING TILE OR GYPSUM BOARD CEILING 12'-0" AFF OR LOWER. PROVIDE WALL MOUNTED ILLUMINATED EXIT SIGNS IN OPEN TO STRUCTURE ROOMS 12'-0" MINIMUM CLEAR OR LOWER. COORDINATE EXIT SIGN LOCATIONS WITH ARCHITECT IN AREAS THAT ARE OPEN TO STRUCTURE WITH A MINIMUM CLEARANCE HIGHER THAN 12'-0"

REFLECTED CEILING PLAN LEGEND

- 2' X 4' LIGHT FIXTURE
- 4' UTILITY FIXTURE
- RETURN GRILLE
- EXHAUST FAN GRILLE
- CEILING MOUNTED EMERGENCY WALLPACK

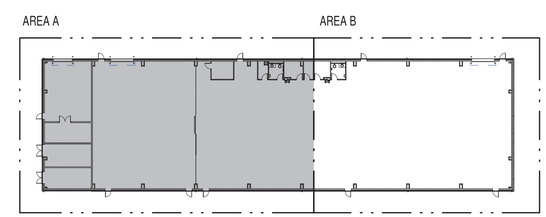

KEY PLAN

1" = 40'

GRAPHIC SCALE: 1/8"=1'-0"

8' 0 4' 8' 16'

GRAPHIC SCALE: 1"=40'

40' 0 40' 80'

MBF ARCHITECTS P.A. REGISTERED ARCHITECTURAL CORPORATION CERT. NO. 50679 NORTH CAROLINA NEW BERN, NC

SYM	DESCRIPTION	DATE	APPR

NAVFAC

DARDEN J. EURE III REGISTERED ARCHITECT 8840 NORTH CAROLINA NEW BERN NC

08 MAY 2026 SEAL

mbf architects pa
317-C Pollock Street | New Bern, NC 28560
252.637.6373 | mbfarchitects.com
A/E INFO

APPROVED
Name of Director, A-E
FOR COMMANDER NAVFAC 5/13/2026
ACTIVITY

SATISFACTORY TO

DES	REL	DRW	ESS	CHK	DJE,III
PM/DM					SGL/MDM
BRANCH MANAGER					DJD
CHIEF ENG/ARCH					JWJ
FIRE PROTECTION					HPN

DEPARTMENT OF THE NAVY
NAVAL FACILITIES ENGINEERING SYSTEMS COMMAND
MIDLANT DX CORE
MARINE CORPS BASE

NAVAL FACILITIES ENGINEERING SYSTEMS COMMAND ~ MIDATLANTIC
NAVAL STATION - NORFOLK, VA.
CAMP LEJEUNE, NC

P-1550 SOF MARINE RAIDER BATTALION / COMPANY / TEAM FACILITIES

REFLECTED CEILING PLAN - AREA A

SCALE:	AS INDICATED
EPROJECT NO.:	1701820
CONSTR. CONTR. NO.	
NAVFAC DRAWING NO.	12903765
SHEET	23 OF 122

A3
CO STG

A-105

FINAL SUBMITTAL

DRAWFORM REVISION: 25 AUGUST 2020

S:\projects\2021\2122 MIDLANT CL P-1550 SOF Marine Battalion CompanyTeam Facilities\2122 Design\2122 Dwgs\2122 ARCH 2023_A3.rvt
5/9/2026 1:03:27 PM
File
Print

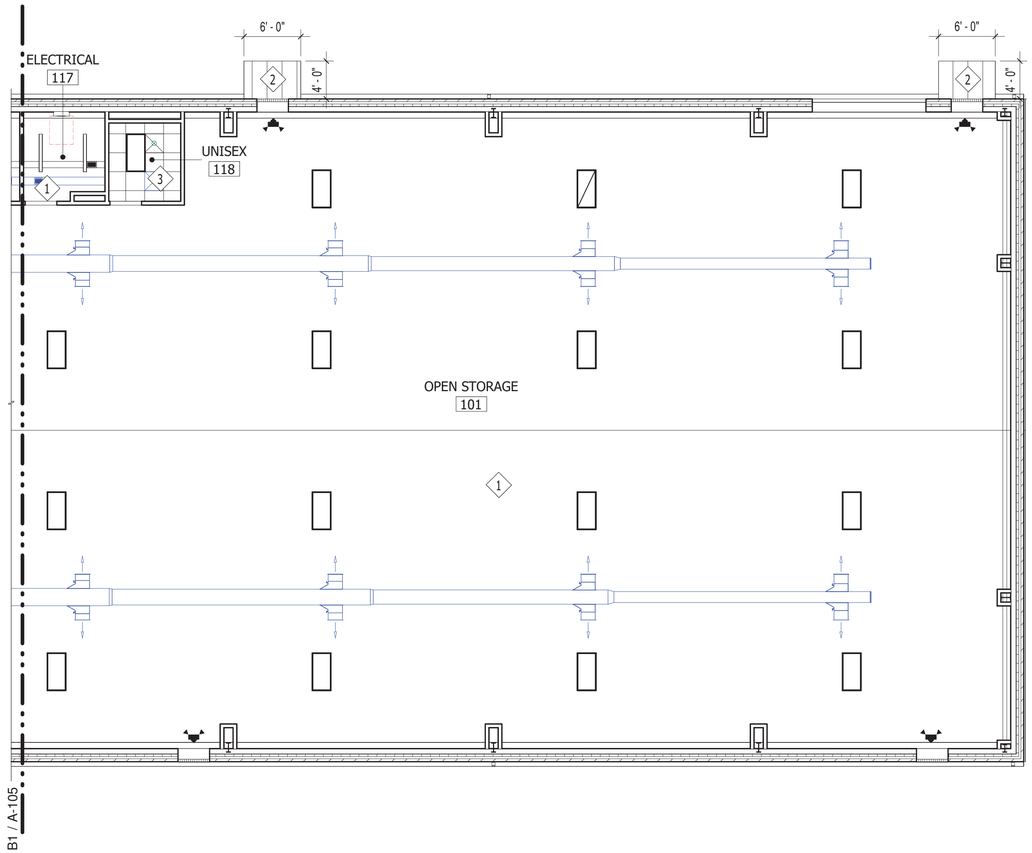

B1 REFLECTED CEILING PLAN - AREA B

SCALE: 1/8" = 1'-0"

CONSTRUCTION KEYNOTES

1. OPEN TO UNDERSIDE OF STRUCTURE ABOVE
2. METAL BUILDING SYSTEM DOOR CANOPY WITH FLUSH METAL SOFFIT. REFERENCE ELEVATIONS AND SECTIONS FOR ADDITIONAL INFORMATION
3. ACOUSTIC TILE CEILING AT 9'-0" ABOVE FINISHED FLOOR

GENERAL CONSTRUCTION NOTES

1. REFERENCE SHEET A-001 FOR SYMBOL LEGEND
2. CEILING HEIGHT ELEVATIONS ARE NOTED ABOVE FINISHED FLOOR
3. ALL LIGHT FIXTURES, MECHANICAL EQUIPMENT AND FIRE SPRINKLERS ARE SHOWN FOR REFERENCE ONLY. REFER TO ELECTRICAL, MECHANICAL AND FIRE PROTECTION DRAWINGS FOR SIZES, LOCATIONS AND MOUNTING DETAILS
4. LIGHTING/EQUIPMENT/CEILING MOUNTED DEVICES SHALL BE LOCATED AT THE CENTER OR CENTERLINE OF ACOUSTICAL CEILING TILES OR OPEN BAYS - TYPICAL UNLESS OTHERWISE NOTED
5. PROVIDE CEILING MOUNTED ILLUMINATED EXIT SIGNS IN ROOMS WITH ACOUSTICAL CEILING TILE OR GYPSUM BOARD CEILING 12'-0" AFF OR LOWER. PROVIDE WALL MOUNTED ILLUMINATED EXIT SIGNS IN OPEN TO STRUCTURE ROOMS 12'-0" MINIMUM CLEAR OR LOWER. COORDINATE EXIT SIGN LOCATIONS WITH ARCHITECT IN AREAS THAT ARE OPEN TO STRUCTURE WITH A MINIMUM CLEARANCE HIGHER THAN 12'-0"

REFLECTED CEILING PLAN LEGEND

- 2' X 4' LIGHT FIXTURE
- 4' UTILITY FIXTURE
- RETURN GRILLE
- EXHAUST FAN GRILLE
- CEILING MOUNTED EMERGENCY WALLPACK

KEY PLAN

1" = 40'

GRAPHIC SCALE: 1/8"=1'-0"
8' 0 4' 8' 16'

GRAPHIC SCALE: 1"=40'
40' 0 40' 80'

MBF ARCHITECTS P.A. REGISTERED ARCHITECTURAL CORPORATION CERT. NO. 50679 NORTH CAROLINA NEW BERN N.C.

SYM	DESCRIPTION	DATE	APPR

NAVFAC

DARDEN J. EURE, III REGISTERED ARCHITECT 8840 NORTH CAROLINA NEW BERN NC

08 MAY 2026 SEAL

mbf architects pa
317-C Pollock Street | New Bern, NC 28560
252.637.6373 | mbfarchitects.com
A/E INFO

APPROVED
DIGITALLY SIGNED BY
FOR COMMANDER NAVFAC 5/13/2026
ACTIVITY

SATISFACTORY TO

DES REL	DRW ESS	CHK DJE,III
PM/DM		SGL/MDM
BRANCH MANAGER		DJD
CHIEF ENG/ARCH		JWJ
FIRE PROTECTION		HPN

DEPARTMENT OF THE NAVY
NAVAL FACILITIES ENGINEERING SYSTEMS COMMAND
MIDLANT DC CORE
MARINE CORPS BASE
NAVAL FACILITIES ENGINEERING SYSTEMS COMMAND ~ MIDATLANTIC
NAVAL STATION - NORFOLK, VA
CAMP LEJEUNE, NC

P-1550 SOF MARINE RAIDER BATTALION / COMPANY / TEAM FACILITIES

REFLECTED CEILING PLAN - AREA B

SCALE: AS INDICATED
EPROJECT NO.: 1701820
CONSTR. CONTR. NO.
NAVFAC DRAWING NO. 12903766
SHEET 24 OF 122

A3
CO STG
A-106

FINAL SUBMITTAL
DRAWFORM REVISION: 25 AUGUST 2020

File S:\projects\2021\2122 MIDLANT CL P-1550 SOF Marine Battalion Company\Team Facilities\2122 Design\2122 Dwgs\2122 ARCH 2023_A3.rvt
Print 5/9/2026 1:03:28 PM

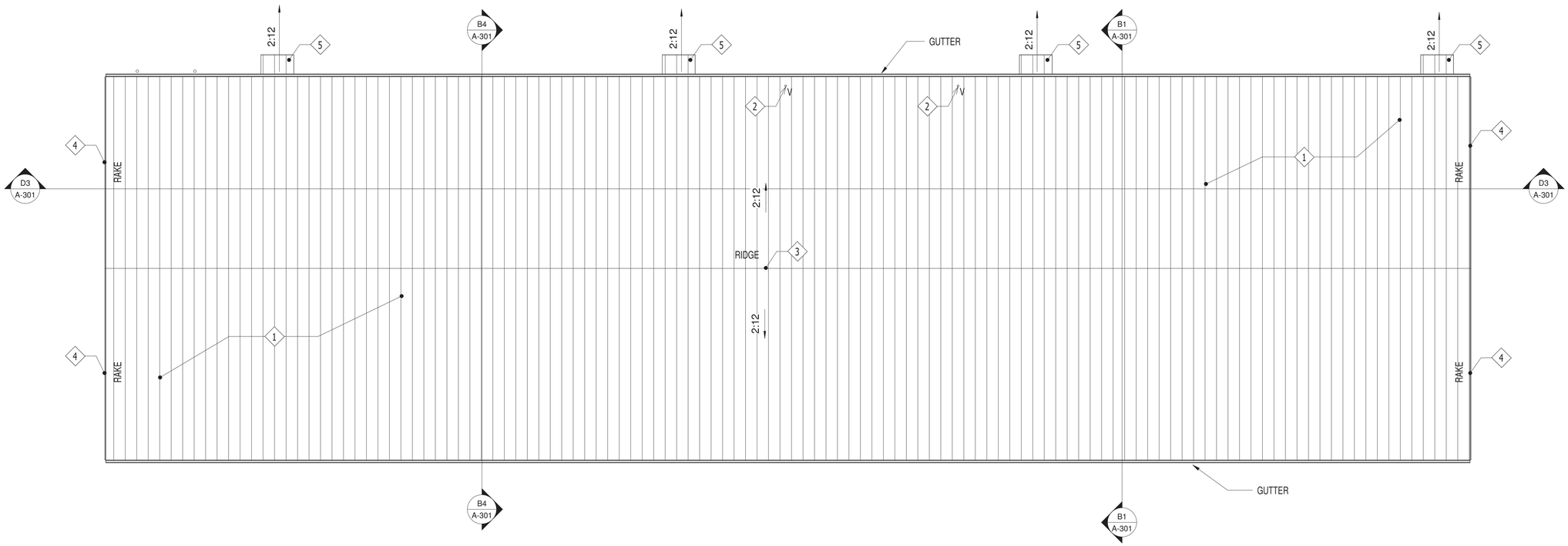

B3 ROOF PLAN

SCALE: 3/32" = 1'-0"

N

GENERAL CONSTRUCTION NOTES

1. REFERENCE SHEET A-001 FOR SYMBOL LEGEND
2. REFERENCE SHEET A-506 FOR ROOFING SYSTEM DETAILS
3. REFERENCE SHEET A-108 FOR AIR AND MOISTURE BARRIER PLAN AND DETAILS
4. ALL PENETRATIONS SHALL BE AT THE CENTER OF A ROOF PAN. STANDING SEAMS SHALL NOT BE DAMAGED OR DISTURBED
5. MECHANICAL CURB PENETRATIONS SHALL BE CENTERED ON A SEAM IF GREATER THAN 1'-0" IN WIDTH

CONSTRUCTION KEYNOTES

1. METAL BUILDING SYSTEM STRUCTURAL STANDING SEAM MEAL ROOF
2. PLUMBING VENT THROUGH ROOF. SEE DETAIL A4/A-506
3. METAL BUILDING SYSTEM RIDGE. SEE DETAIL C1/A-506
4. METAL BUILDING SYSTEM RAKE TRIM. SEE DETAIL C3/A-506
5. METAL BUILDING SYSTEM DOOR CANOPY. SEE DETAIL A1/A-504

GRAPHIC SCALE: 1/8"=1'-0"
8' 0 4' 8' 16'

GRAPHIC SCALE: 1"=40'
40' 0 40' 80'

MBF ARCHITECTS P.A. REGISTERED ARCHITECTURAL CORPORATION CERT. NO. 50679 NORTH CAROLINA NEW BERN N.C.

SYM	DESCRIPTION	DATE	APPR

NAVFAC

DARDEN J. EURE III REGISTERED ARCHITECT 8040 NORTH CAROLINA NEW BERN NC

08 MAY 2026 SEAL

mbf architects pa
317-C Pollock Street | New Bern, NC 28560
252.637.6373 | mbfarchitects.com
A/E INFO

APPROVED
CHIEF ENGINEER, NAVFAC
FOR COMMANDER NAVFAC 5/13/2026
ACTIVITY

SATISFACTORY TO

DES	REL	DRW	ESS	CHK	DJE,III
PM/DM					SGL/MDM
BRANCH MANAGER					DJD
CHIEF ENG/ARCH					JWJ
FIRE PROTECTION					HPN

DEPARTMENT OF THE NAVY
NAVAL FACILITIES ENGINEERING SYSTEMS COMMAND
MIDLANT DC CORE
MARINE CORPS BASE
NAVAL FACILITIES ENGINEERING SYSTEMS COMMAND ~ MIDATLANTIC
NAVAL STATION - NORFOLK, VA
CAMP LEJEUNE, NC

P-1550 SOF MARINE RAIDER BATTALION / COMPANY / TEAM FACILITIES

COMPREHENSIVE ROOF PLAN

SCALE: AS INDICATED
EPROJECT NO.: 1701820
CONSTR. CONTR. NO.

A3
CO STG

NAVFAC DRAWING NO.
12903767
SHEET 25 OF 122
A-107

FINAL SUBMITTAL
DRAWFORM REVISION: 25 AUGUST 2020

S:\projects\2021\2122 MIDLANT CL P-1550 SOF Marine Battalion CompanyTeam Facilities\2122 Design\2122 Dwgs\2122 ARCH 2023_A3.rvt
5/9/2026 1:03:29 PM
File
Print

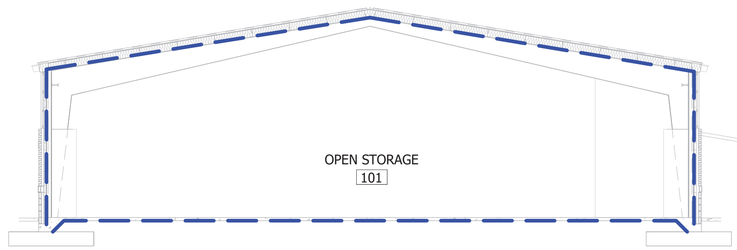

C3 BUILDING SECTION - AIR AND MOISTURE BARRIER

SCALE: 1/8" = 1'-0"

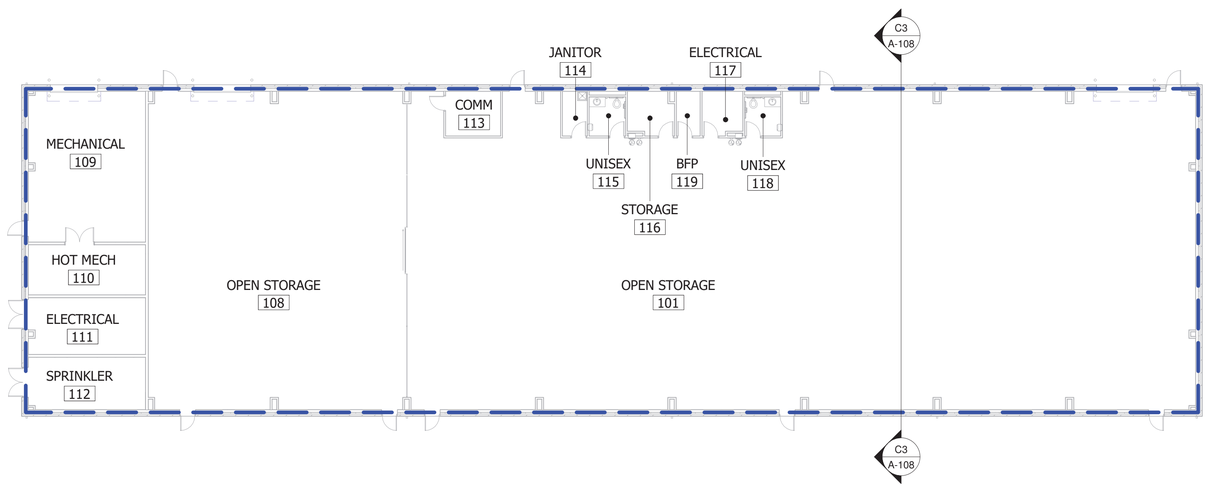

A3 FLOOR PLAN - AIR AND MOISTURE BARRIER

SCALE: 1/16" = 1'-0"

AIR AND MOISTURE BARRIER LEGEND

AIR AND MOISTURE BARRIER TESTING BOUNDARY

AIR AND MOISTURE BARRIER NOTES

1. SEE SYMBOL LEGEND ON SHEET A-001
2. THE AIR AND MOISTURE BARRIER MUST BE CONTINUOUS AND UNBROKEN ON SIX SIDES OF THE BUILDING ENVELOPE AS ILLUSTRATED
3. PROVIDE AIR AND MOISTURE BARRIER SEALANT AT TRANSITIONS BETWEEN DISSIMILAR MATERIALS
4. DO NOT INSTALL AIR AND MOISTURE BARRIER WHERE THE MASONRY FOUNDATION WALL BEARS ON THE CONCRETE FOOTING
5. PROVIDE BACKER ROD AND AIR AND MOISTURE BARRIER SEALANT AT JOINTS AND GAPS 1/2" OR LESS IN WIDTH
6. PROVIDE CLOSED CELL FOAM AT THE PERIMETER OF DOOR AND WINDOWS FRAMES, AND SIMILAR DETAILS
7. PROVIDE CLOSED CELL FOAM AT ALL JOINTS AND GAPS GREATER THAN 1/2"

AIR BARRIER TEST DATA

FLOOR AREA (HEATED):	±16,934 SF
EXTERIOR WALL SURFACE AREA:	±9,478 SF
ROOF AREA:	±17,791 SF
TOTAL SURFACE AREA:	±44,203 SF

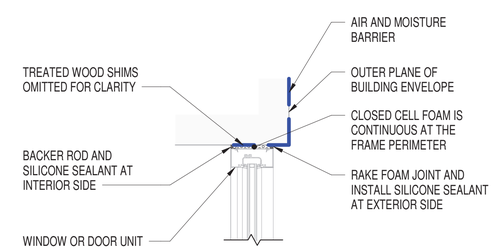

NOTES:
1. INTEGRATE OPENINGS INTO THE AIR & MOISTURE BARRIER SYSTEM
2. COORDINATE ENVELOPE MATERIALS AND COMPONENTS TO ENSURE COMPARABILITY
3. INSULATION AND VENEER MATERIALS OMITTED FOR CLARITY

A5 WALL OPENING SEAL DETAIL

SCALE: 1 1/2" = 1'-0"

GRAPHIC SCALE: 1/16"=1'-0"
16' 0 8' 16' 32'

GRAPHIC SCALE: 1/8"=1'-0"
8' 0 4' 8' 16'

MBF ARCHITECTS P.A. REGISTERED ARCHITECTURAL CORPORATION CERT. NO. 50679 NORTH CAROLINA NEW BERN N.C.

SYM	DESCRIPTION	DATE	APPR

NAVFAC

DARDEN J. EURE III REGISTERED ARCHITECT 8640 NORTH CAROLINA NEW BERN NC

08 MAY 2026 SEAL

mbf architects pa
317-C Pollock Street | New Bern, NC 28560
252.637.6373 | mbfarchitects.com
A/E INFO

APPROVED
FOR COMMANDER NAVFAC 5/15/2026
ACTIVITY

SATISFACTORY TO

DES	REL	DRW	ESS	CHK	DJE,III
PM/DM					SGL/MDM
BRANCH MANAGER					DJD
CHIEF ENG/ARCH					JWJ
FIRE PROTECTION					HPN

DEPARTMENT OF THE NAVY
NAVAL FACILITIES ENGINEERING SYSTEMS COMMAND
MIDLANT DC CORE
MARINE CORPS BASE
NAVAL FACILITIES ENGINEERING SYSTEMS COMMAND ~ MIDATLANTIC
NAVAL STATION - NORFOLK, VA
CAMP LEJEUNE, NC
P-1550 SOF MARINE RAIDER BATTALION / COMPANY / TEAM FACILITIES
AIR AND MOISTURE BARRIER PLAN, DETAILS AND NOTES

SCALE: AS INDICATED
EPROJECT NO.: 1701820
CONSTR. CONTR. NO.
NAVFAC DRAWING NO. 12903768
SHEET 26 OF 122

A3
CO STG
A-108

FINAL SUBMITTAL
DRAWFORM REVISION: 25 AUGUST 2020

S:\projects\2021\2122 MIDLANT CL P-1550 SOF Marine Battalion CompanyTeam Facilities\2122 Design\2122 Dwgs\2122 ARCH 2023_A3.rvt
5/9/2026 1:03:30 PM
File
Print

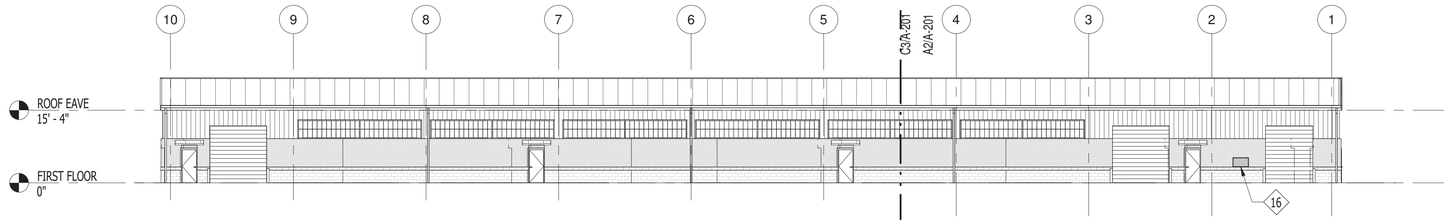

D3 COMPREHENSIVE NORTH ELEVATION

SCALE: 1/16" = 1'-0"

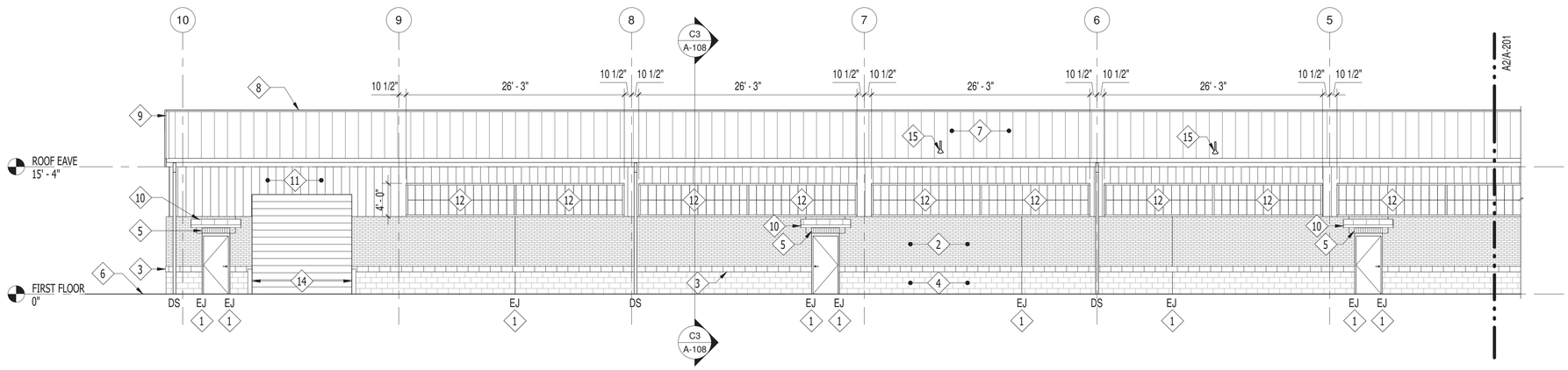

C3 PARTIAL NORTH ELEVATION

SCALE: 1/8" = 1'-0"

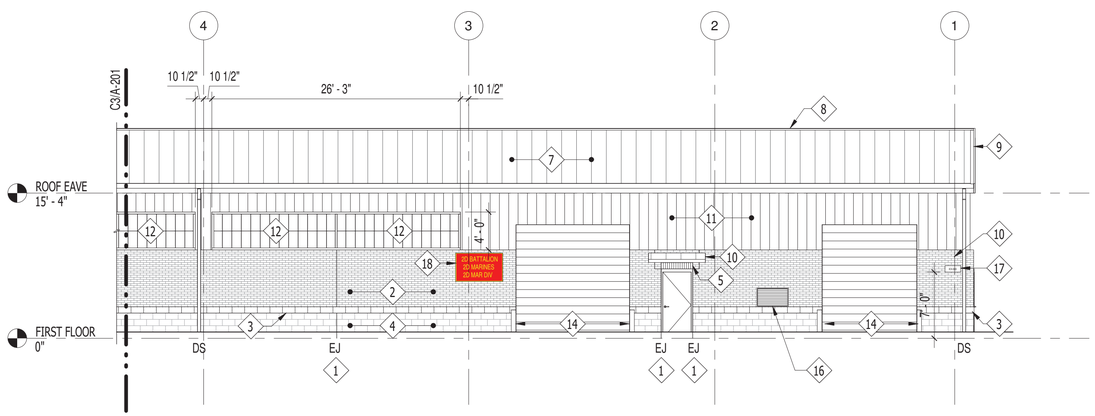

A2 PARTIAL NORTH ELEVATION

SCALE: 1/8" = 1'-0"

GENERAL CONSTRUCTION NOTES

1. REFERENCE SHEET A-001 FOR SYMBOL LEGEND

CONSTRUCTION KEYNOTES

1. BRICK EXPANSION JOINTS (EJ). EXTEND HORIZONTALLY TO THE END OF THE STEEL LINTEL AT THE HEAD DOORS AND WINDOWS, THEN CONTINUE VERTICALLY
2. BRICK MASONRY. RUNNING BOND TYPICAL
3. SPLIT FACE CMU WATER TABLE
4. SPLIT FACE CMU BASE COURSES
5. BRICK SOLDIER COURSE AT DOOR HEADS, TYPICAL
6. FINISHED GRADE. REFERENCE CIVIL DRAWINGS
7. METAL BUILDING SYSTEM STRUCTURAL STANDING SEAM METAL ROOFING
8. METAL BUILDING SYSTEM RIDGE
9. METAL BUILDING SYSTEM RAKE TRIM
10. METAL BUILDING SYSTEM DOOR CANOPY
11. VERTICAL METAL WALL PANELS
12. TRANSLUCENT WALL PANEL SYSTEM
13. LED WALL PACK. SEE ELECTRICAL DRAWINGS
14. BOLLARD
15. PLUMBING VENT THROUGH ROOF
16. ALUMINUM LOUVER
17. BUILDING IDENTIFICATION SIGNAGE
18. UNIT SIGNAGE

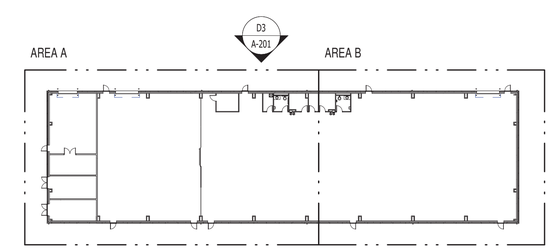

KEY PLAN

1" = 40'

GRAPHIC SCALE: 1/16"=1'-0"
16' 0 8' 16' 32'

GRAPHIC SCALE: 1/8"=1'-0"
8' 0 4' 8' 16'

GRAPHIC SCALE: 1"=40'
40' 0 40' 80'

MBF ARCHITECTS P.A. REGISTERED ARCHITECTURAL CORPORATION CERT. NO. 50679 NORTH CAROLINA NEW BERN N.C.

SYM	DESCRIPTION	DATE	APPR

NAVFAC

DARDEN J. EURE III REGISTERED ARCHITECT 8840 NORTH CAROLINA NEW BERN NC

08 MAY 2026 SEAL

mbf architects pa
317-C Pollock Street | New Bern, NC 28560
252.637.6373 | mbfarchitects.com
A/E INFO

APPROVED
FOR COMMANDER NAVFAC 5/13/2026
ACTIVITY

SATISFACTORY TO

DES	REL	DRW	ESS	CHK	DJE,III
PM/DM					SGL/MDM
BRANCH MANAGER					DJD
CHIEF ENG/ARCH					JWJ
FIRE PROTECTION					HPN

DEPARTMENT OF THE NAVY
NAVAL FACILITIES ENGINEERING SYSTEMS COMMAND
MIDLANT DC CORE
MARINE CORPS BASE

NAVAL FACILITIES ENGINEERING SYSTEMS COMMAND ~ MIDATLANTIC
NAVAL STATION - NORFOLK, VA
CAMP LEJEUNE, NC

P-1550 SOF MARINE RAIDER BATTALION / COMPANY / TEAM FACILITIES

EXTERIOR ELEVATIONS

SCALE: AS INDICATED
EPROJECT NO.: 1701820
CONSTR. CONTR. NO.

NAVFAC DRAWING NO. 12903769
SHEET 27 OF 122

A3
CO STG
A-201

FINAL SUBMITTAL

DRAWFORM REVISION: 25 AUGUST 2020

S:\projects\2021\2122 MIDLANT CL P-1550 SOF Marine Battalion CompanyTeam Facilities\2122 Design\2122 Dwgs\2122 ARCH 2023_A3.rvt
5/9/2026 1:03:32 PM
File
Print

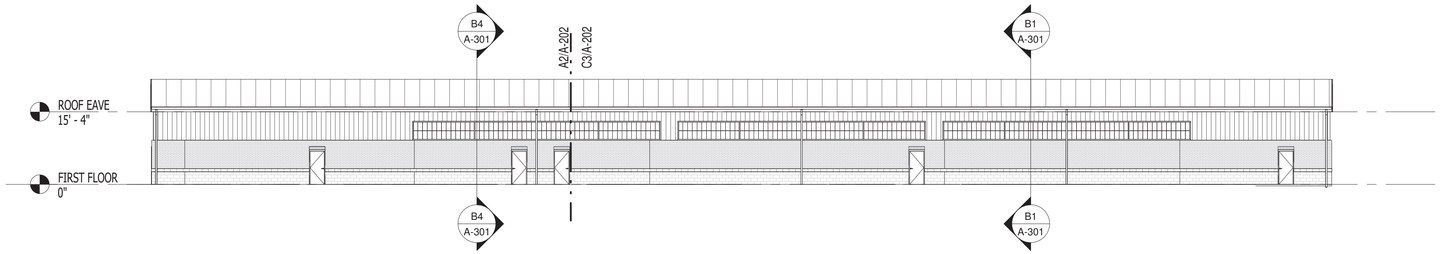

D3 COMPREHENSIVE SOUTH ELEVATION

SCALE: 1/16" = 1'-0"

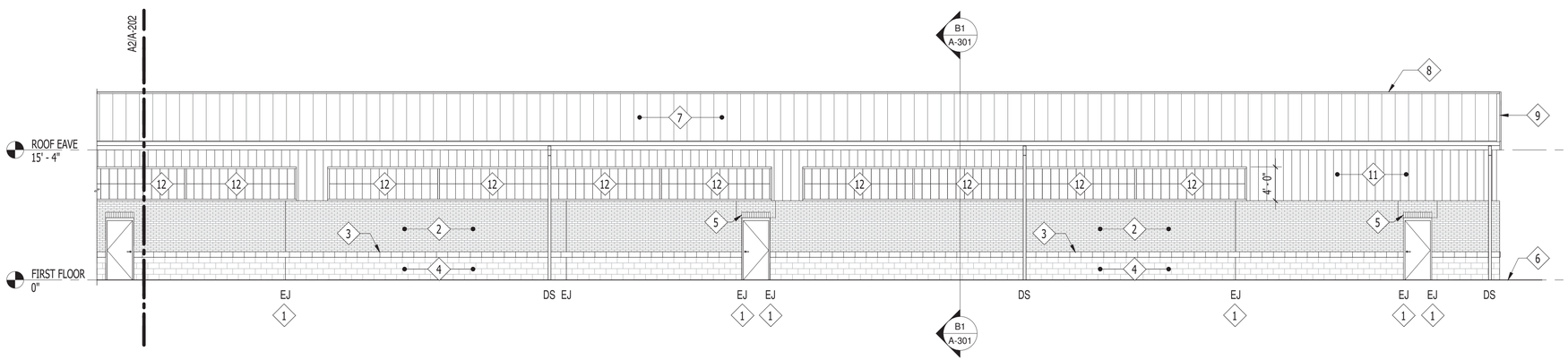

C3 PARTIAL SOUTH ELEVATION

SCALE: 1/8" = 1'-0"

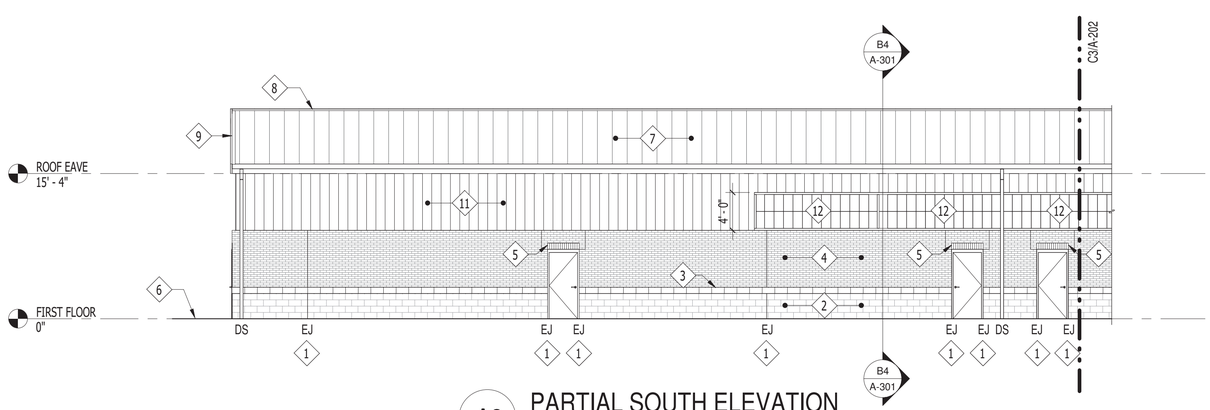

A2 PARTIAL SOUTH ELEVATION

SCALE: 1/8" = 1'-0"

GENERAL CONSTRUCTION NOTES

1. REFERENCE SHEET A-001 FOR SYMBOL LEGEND

CONSTRUCTION KEYNOTES

1. BRICK EXPANSION JOINTS (EJ). EXTEND HORIZONTALLY TO THE END OF THE STEEL LINTEL AT THE HEAD DOORS AND WINDOWS, THEN CONTINUE VERTICALLY
2. BRICK MASONRY. RUNNING BOND TYPICAL
3. SPLIT FACE CMU WATER TABLE
4. SPLIT FACE CMU BASE COURSES
5. BRICK SOLDIER COURSE AT DOOR HEADS, TYPICAL
6. FINISHED GRADE. REFERENCE CIVIL DRAWINGS
7. METAL BUILDING SYSTEM STRUCTURAL STANDING SEAM METAL ROOFING
8. METAL BUILDING SYSTEM RIDGE
9. METAL BUILDING SYSTEM RAKE TRIM
10. METAL BUILDING SYSTEM DOOR CANOPY
11. VERTICAL METAL WALL PANELS
12. TRANSLUCENT WALL PANEL SYSTEM
13. LED WALL PACK. SEE ELECTRICAL DRAWINGS
14. BOLLARD
15. PLUMBING VENT THROUGH ROOF
16. ALUMINUM LOUVER
17. BUILDING IDENTIFICATION SIGNAGE
18. UNIT SIGNAGE

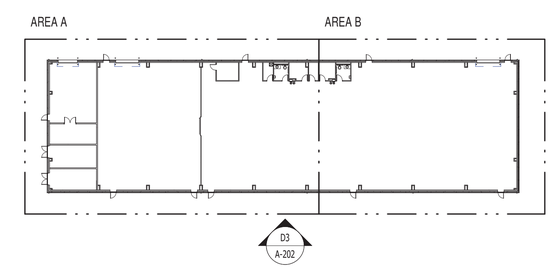

KEY PLAN

1" = 40'

GRAPHIC SCALE: 1/16"=1'-0"
16' 0 8' 16' 32'

GRAPHIC SCALE: 1/8"=1'-0"
8' 0 4' 8' 16'

GRAPHIC SCALE: 1"=40'
40' 0 40' 80'

MBF ARCHITECTS P.A. REGISTERED ARCHITECTURAL CORPORATION CERT. NO. 50679 NORTH CAROLINA NEW BERN N.C.

SYM	DESCRIPTION	DATE	APPR

NAVFAC

DARDEN J. EURE, III REGISTERED ARCHITECT 8040 NORTH CAROLINA NEW BERN NC

08 MAY 2026 SEAL

mbf architects pa
317-C Pollock Street | New Bern, NC 28560
252.637.6373 | mbfarchitects.com
A/E INFO

APPROVED
FOR COMMANDER NAVFAC 5/13/2026
ACTIVITY

SATISFACTORY TO

DES	REL	DRW	ESS	CHK	DJE,III
PM/DM					SGL/MDM
BRANCH MANAGER					DJD
CHIEF ENG/ARCH					JWJ
FIRE PROTECTION					HPN

DEPARTMENT OF THE NAVY
NAVAL FACILITIES ENGINEERING SYSTEMS COMMAND
MIDLANT DC CORE
MARINE CORPS BASE

NAVAL FACILITIES ENGINEERING SYSTEMS COMMAND ~ MIDATLANTIC
NAVAL STATION - NORFOLK, VA
CAMP LEJEUNE, NC

P-1550 SOF MARINE RAIDER BATTALION / COMPANY / TEAM FACILITIES

EXTERIOR ELEVATIONS

SCALE: AS INDICATED
EPROJECT NO.: 1701820
CONSTR. CONTR. NO.

NAVFAC DRAWING NO. 12903770
SHEET 28 OF 122

A3
CO STG

A-202

FINAL SUBMITTAL

DRAWFORM REVISION: 25 AUGUST 2020

S:\projects\2021\2122 MIDLANT CL P-1550 SOF Marine Battalion Company\Team Facilities\2122 Design\2122 Dwgs\2122 ARCH 2023_A3.rvt
5/9/2026 1:03:33 PM
File
Print

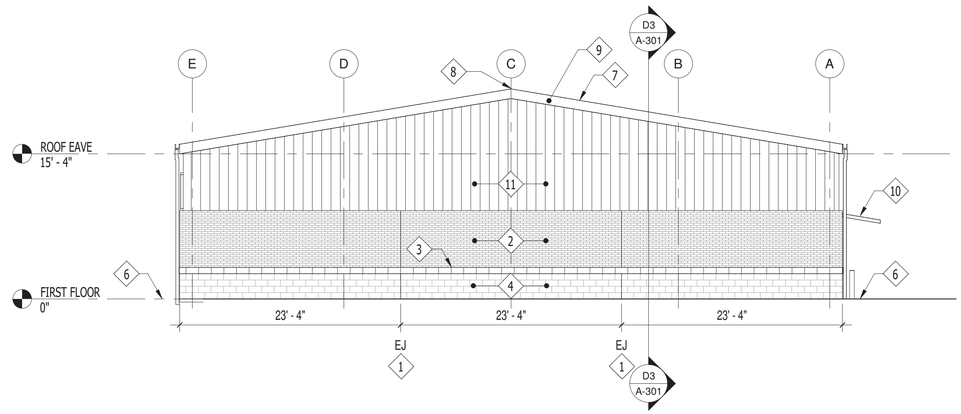

C3 EAST ELEVATION

SCALE: 1/8" = 1'-0"

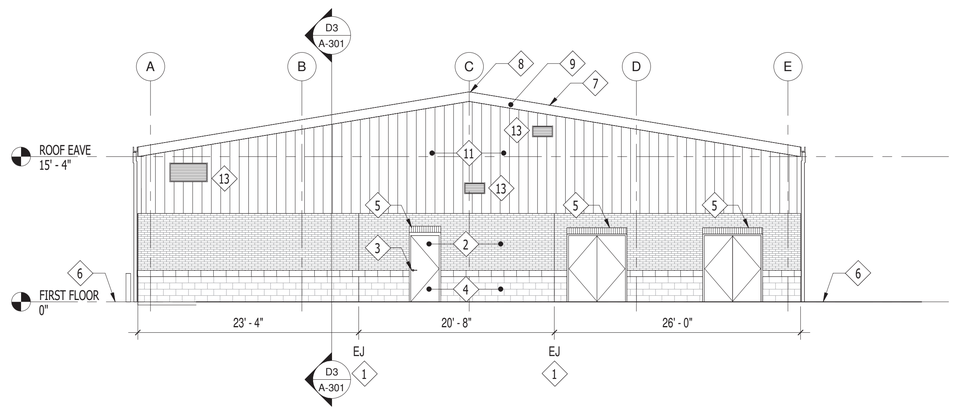

A3 WEST ELEVATION

SCALE: 1/8" = 1'-0"

GENERAL CONSTRUCTION NOTES

1. REFERENCE SHEET A-001 FOR SYMBOL LEGEND

CONSTRUCTION KEYNOTES

1. BRICK EXPANSION JOINTS (EJ). EXTEND HORIZONTALLY TO THE END OF THE STEEL LINTEL AT THE HEAD DOORS AND WINDOWS, THEN CONTINUE VERTICALLY
2. BRICK MASONRY. RUNNING BOND TYPICAL
3. SPLIT FACE CMU WATER TABLE
4. SPLIT FACE CMU BASE COURSES
5. BRICK SOLDIER COURSE AT DOOR HEADS, TYPICAL
6. FINISHED GRADE. REFERENCE CIVIL DRAWINGS
7. METAL BUILDING SYSTEM STRUCTURAL STANDING SEAM METAL ROOFING
8. METAL BUILDING SYSTEM RIDGE
9. METAL BUILDING SYSTEM RAKE TRIM
10. METAL BUILDING SYSTEM DOOR CANOPY
11. VERTICAL METAL WALL PANELS
12. LED WALL PACK. SEE ELECTRICAL DRAWINGS
13. ALUMINUM LOUVER

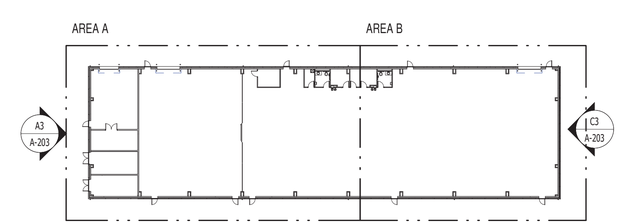

KEY PLAN

1" = 40'

GRAPHIC SCALE: 1/8"=1'-0"

8' 0 4' 8' 16'

GRAPHIC SCALE: 1"=40'

40' 0 40' 80'

MBF ARCHITECTS P.A. REGISTERED ARCHITECTURAL CORPORATION CERT. NO. 50679 NORTH CAROLINA NEW BERN N.C.

SYM	DESCRIPTION	DATE	APPR

NAVFAC

DARDEN J. EURE, III REGISTERED ARCHITECT 8840 NORTH CAROLINA NEW BERN NC

08 MAY 2026 SEAL

mbf architects pa

317-C Pollock Street | New Bern, NC 28560
252.637.6373 | mbfarchitects.com

A/E INFO

APPROVED

FOR COMMANDER NAVFAC 5/13/2026

ACTIVITY

SATISFACTORY TO

DES	REL	DRW	ESS	CHK	DJE,III

PM/DM	SGL/MDM
BRANCH MANAGER	DJD
CHIEF ENG/ARCH	JWJ
FIRE PROTECTION	HPN

DEPARTMENT OF THE NAVY
NAVAL FACILITIES ENGINEERING SYSTEMS COMMAND
MIDLANT DC CORE
MARINE CORPS BASE

NAVAL FACILITIES ENGINEERING SYSTEMS COMMAND ~ MIDATLANTIC
NAVAL STATION - NORFOLK, VA
CAMP LEJEUNE, NC

P-1550 SOF MARINE RAIDER BATTALION / COMPANY / TEAM FACILITIES

EXTERIOR ELEVATIONS

SCALE:	AS INDICATED
EPROJECT NO.:	1701820
CONSTR. CONTR. NO.	
NAVFAC DRAWING NO.	12903771
SHEET	29 OF 122

A3
CO STG

A-203

FINAL SUBMITTAL

DRAWFORM REVISION: 25 AUGUST 2020

S:\projects\2021\2122 MIDLANT CL P-1550 SOF Marine Battalion CompanyTeam Facilities\2122 Design\2122 Dwgs\2122 ARCH 2023_A3.rvt
5/9/2026 1:03:34 PM

File
Print

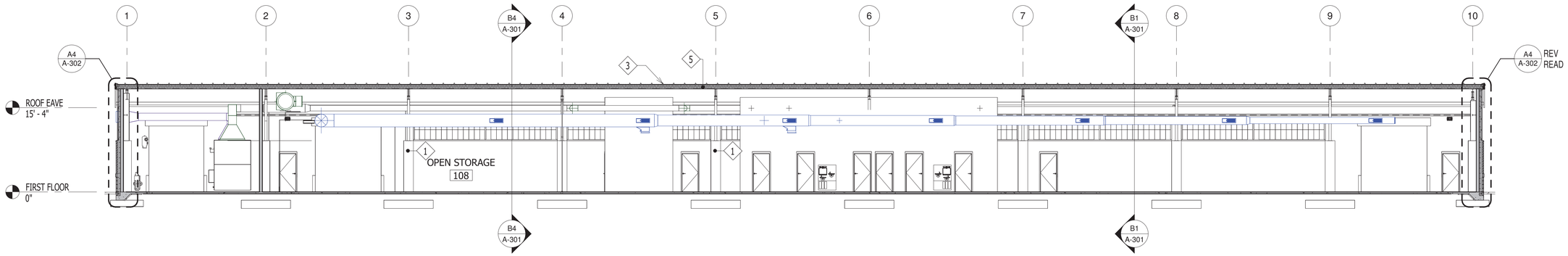

D3 LONGITUDINAL BUILDING SECTION LOOKING NORTH

SCALE: 1" = 10'-0"

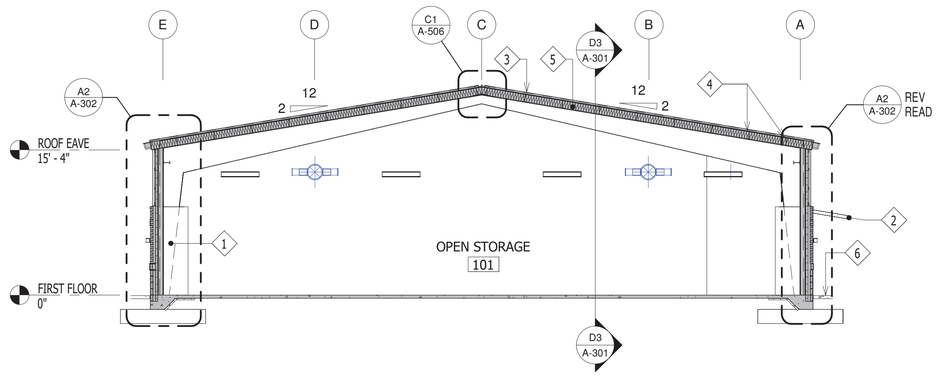

B1 TRANSVERSE BUILDING SECTION LOOKING WEST

SCALE: 1/8" = 1'-0"

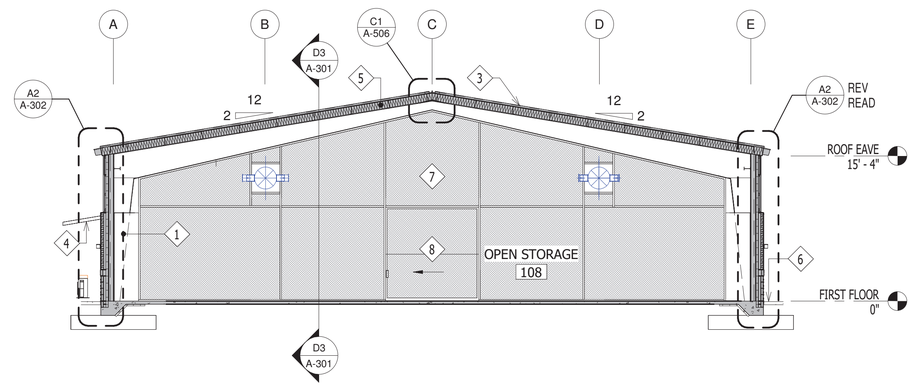

B4 TRANSVERSE BUILDING SECTION LOOKING EAST

SCALE: 1/8" = 1'-0"

GENERAL CONSTRUCTION NOTES

1. REFERENCE SHEET A-001 FOR SYMBOL LEGEND
2. REFERENCE SHEET A-501 FOR WALL TYPES
3. REFERENCE THE LIFE SAFETY DRAWINGS FOR LOCATIONS OF RATED WALLS AND SMOKE PARTITIONS
4. REFERENCE INTERIOR DESIGN DRAWINGS FOR FINISH SCHEDULE
5. REFERENCE SHEET A-108 FOR AIR AND MOISTURE BARRIER PLAN AND DETAILS
6. DIMENSIONS ORIGINATE FROM FACE OF STEEL STUDS AND FACE OF CONCRETE MASONRY UNITS
7. PROVIDE TREATED WOOD BLOCKING TO SUPPORT WALL MOUNTED AND RECESSED FIXTURES, ACCESSORIES, FLAT PANEL DISPLAY MOUNTS, AND ETCETERA. FOLLOW MANUFACTURERS RECOMMENDATIONS.
8. SLOPE SETTING BED FLOORS 1/8" MINIMUM TO ALL FLOOR DRAINS. SEE STRUCTURAL DRAWINGS FOR DEPRESSED SLAB LOCATIONS
9. PROVIDE FULL HEIGHT RESILIENT CORNER GUARDS AT EXPOSED CORNERS OF GYPSUM PARTITIONS, EXCEPT PROVIDE STAINLESS STEEL CORNER GUARDS AT CORRIDORS, WAREHOUSE AND STORAGE AREAS
10. REFERENCE SHEET A-601 FOR DOOR AND FRAME SCHEDULE
11. REFERENCE SHEET A-604 FOR WINDOW SCHEDULE
12. PROVIDE CONCRETE SPLASH BLOCK AT ALL DOWNSPOUT LOCATIONS WHERE NOT CONNECTED TO STORM DRAIN PIPING.

CONSTRUCTION KEYNOTES

1. COLUMN ENCLOSURE BEYOND. SEE DETAIL A3/A-504
2. METAL BUILDING CANOPY BEYOND
3. METAL BUILDING SYSTEM STANDING SEAM ROOF PANELS
4. METAL BUILDING SYSTEM ROOF PURLINS
5. METAL BUILDING INSULATION SYSTEM
6. CONCRETE SPLASH BLOCK
7. WIRE MESH PARTITION. EXTEND TO THE UNDERSIDE OF THE STRUCTURE ABOVE. SEE DETAIL A5/A-504. PROVIDE BLOCK-OUTS FOR MECHANICAL DUCT, FIRE PROTECTION PIPING AND SIMILAR PENETRATIONS.
8. 10'-0" W x 10'-0" H WIRE MESH SLIDING GATE LOCATED AT CENTER SPAN

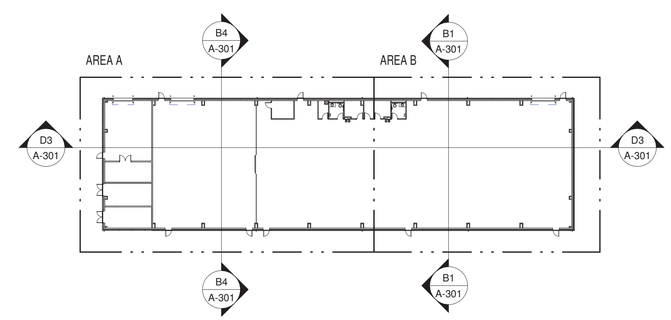

KEY PLAN

1" = 40'

GRAPHIC SCALE: 1/8"=1'-0"
8' 0 4' 8' 16'

GRAPHIC SCALE: 1"=10'
10' 0 10' 20'

GRAPHIC SCALE: 1"=40'
40' 0 40' 80'

MBF ARCHITECTS P.A. REGISTERED ARCHITECTURAL COMPANY CERT. NO. 50679 NORTH CAROLINA NEW BERN, N.C.

SYM	DESCRIPTION	DATE	APPR

NAVFAC

DARDEN J. EURE III REGISTERED ARCHITECT 8640 NORTH CAROLINA NEW BERN NC
08 MAY 2026 SEAL

mbf architects pa
317-C Pollock Street | New Bern, NC 28560
252.637.6373 | mbfarchitects.com
A/E INFO

APPROVED
FOR COMMANDER NAVFAC 5/13/2026
ACTIVITY

SATISFACTORY TO
DES REL DRW ESS CHK DJE,III
PM/DM SGL/MDM
BRANCH MANAGER DJD
CHIEF ENG/ARCH JWJ
FIRE PROTECTION HPN

DEPARTMENT OF THE NAVY
NAVAL FACILITIES ENGINEERING SYSTEMS COMMAND
MIDLANT DC CORE
MARINE CORPS BASE
NAVAL FACILITIES ENGINEERING SYSTEMS COMMAND ~ MIDATLANTIC
NAVAL STATION - NORFOLK, VA
CAMP LEJEUNE, NC
P-1550 SOF MARINE RAIDER
BATTALION / COMPANY / TEAM FACILITIES
BUILDING SECTIONS

SCALE: AS INDICATED
EPROJECT NO.: 1701820
CONSTR. CONTR. NO.
NAVFAC DRAWING NO. 12903772
SHEET 30 OF 122
A3
CO STG
A-301
FINAL SUBMITTAL
DRAWFORM REVISION: 25 AUGUST 2020

S:\projects\2021\2122 MIDLANT CL P-1550 SOF Marine Battalion CompanyTeam Facilities\2122 Design\2122 Dwgs\2122 ARCH 2023_A3.rvt
File
5/9/2026 1:03:38 PM
Print

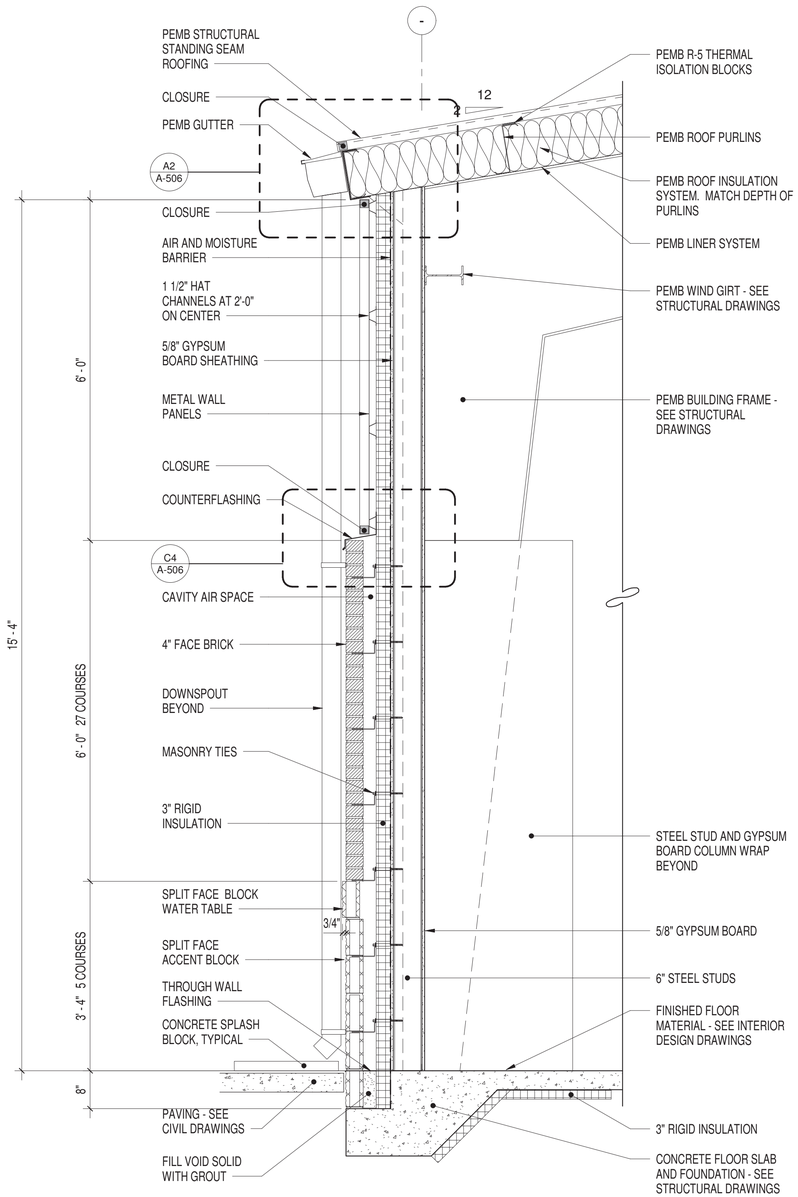

A2 WALL SECTION - EAVE

SCALE: 3/4" = 1'-0"

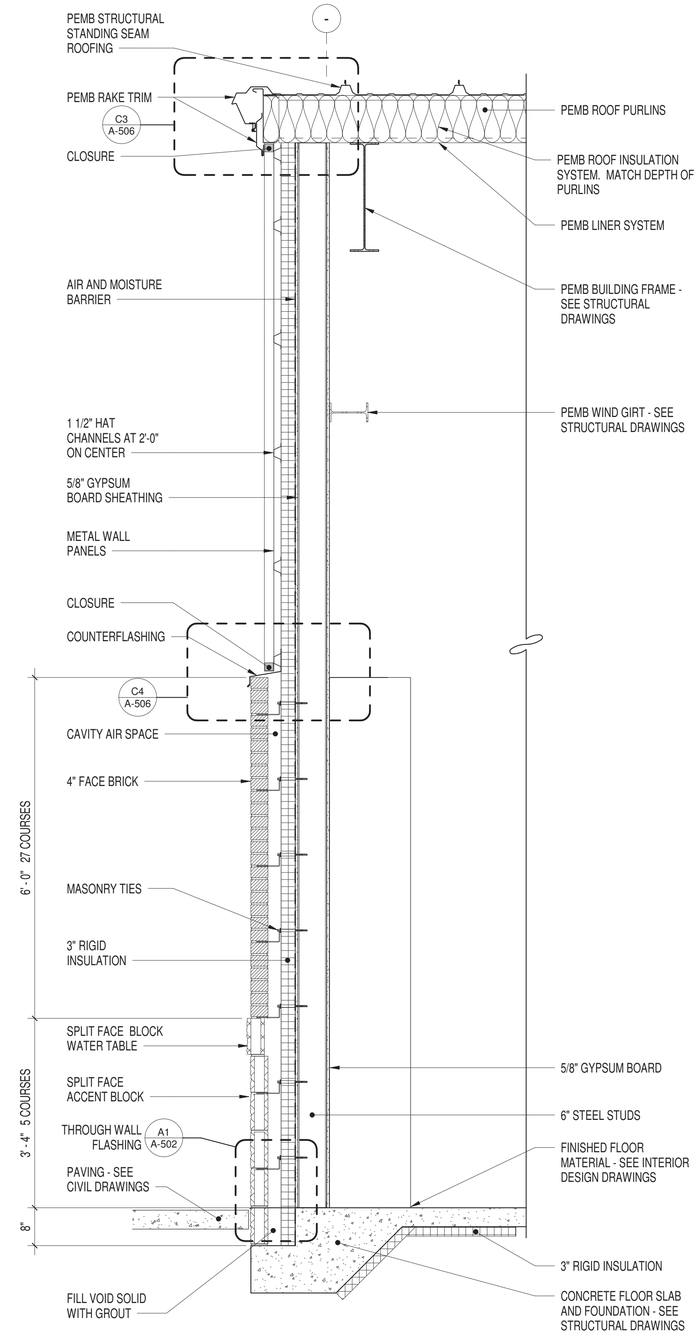

A4 WALL SECTION - RAKE

SCALE: 3/4" = 1'-0"

GRAPHIC SCALE: 3/4"=1'-0"

1' 0 1' 2' 3'

MBF ARCHITECTS, P.A. REGISTERED ARCHITECTURAL CORPORATION CERT. NO. 50679 NORTH CAROLINA NEW BERN N.C.

SYM	DESCRIPTION	DATE	APPR

NAVFAC

DARDEN J. EURE, III REGISTERED ARCHITECT 8840 NORTH CAROLINA NEW BERN NC

08 MAY 2026 SEAL

mbf architects pa

317-C Pollock Street | New Bern, NC 28560
252.637.6373 | mbfarchitects.com

A/E INFO

APPROVED
JOHN E. CHAMBLISS, R.A.

FOR COMMANDER NAVFAC 5/13/2026

ACTIVITY

SATISFACTORY TO

DES	REL	DRW	ESS	CHK	DJE,III
PM/DM					SGL/MDM
BRANCH MANAGER					DJD
CHIEF ENG/ARCH					JWJ
FIRE PROTECTION					HPN

DEPARTMENT OF THE NAVY
NAVAL FACILITIES ENGINEERING SYSTEMS COMMAND
NAVAL FACILITIES ENGINEERING SYSTEMS COMMAND ~ MIDATLANTIC
MIDLANT DC CORE
MARINE CORPS BASE
NAVAL STATION - NORFOLK, VA.
CAMP LEJEUNE, NC

P-1550 SOF MARINE RAIDER BATTALION / COMPANY / TEAM FACILITIES

WALL SECTIONS

SCALE: AS INDICATED

EPROJECT NO.: 1701820

CONSTR. CONTR. NO.

NAVFAC DRAWING NO. 12903773

SHEET 31 OF 122

A3

CO STG

A-302

FINAL SUBMITTAL

DRAWFORM REVISION: 25 AUGUST 2020

S:\projects\2021\2122 MIDLANT CL P-1550 SOF Marine Battalion Company Team Facilities\2122 Design\2122 Dwgs\2122 ARCH 2023_A3.rvt

File
Print 5/9/2026 1:03:38 PM

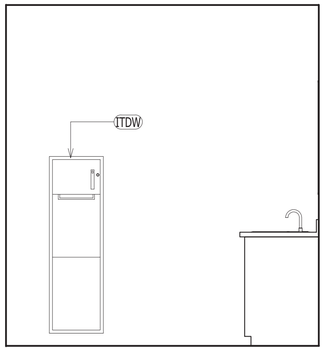

C1 INTERIOR ELEVATION AT 115
SCALE: 1/2" = 1'-0"

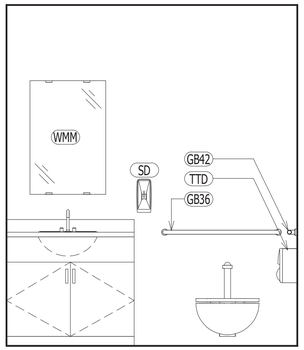

C2 INTERIOR ELEVATION AT 115
SCALE: 1/2" = 1'-0"

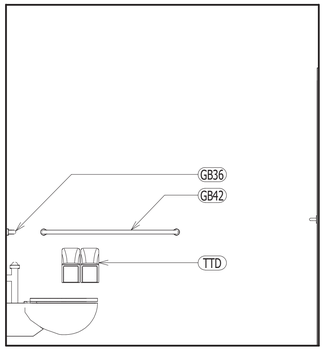

B1 INTERIOR ELEVATION AT 115
SCALE: 1/2" = 1'-0"

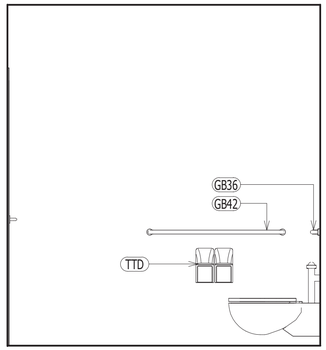

B2 INTERIOR ELEVATION AT 118
SCALE: 1/2" = 1'-0"

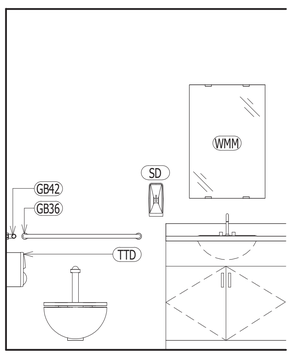

A1 INTERIOR ELEVATION AT 118
SCALE: 1/2" = 1'-0"

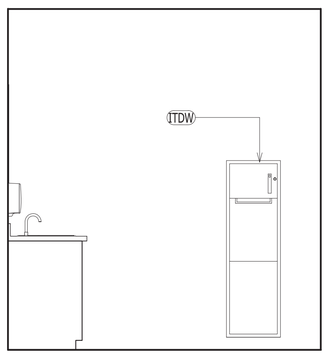

A2 INTERIOR ELEVATION AT 118
SCALE: 1/2" = 1'-0"

TOILET ACCESSORIES LEGEND

NOTES: ACCESSORIES SPECIFIED APPEAR ON DESIGNATED PLANS, HOWEVER NOT ALL ACCESSORIES SHOWN HERE MAY BE SPECIFIED. COORDINATE WITH PLAN DESIGNATIONS. REFERENCE THE SPECIFICATIONS FOR DETAILED PRODUCT INFORMATION INCLUDING ACCEPTABLE MANUFACTURERS, FINISHES, ETC.

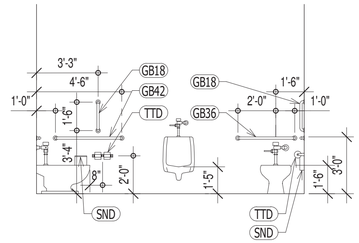

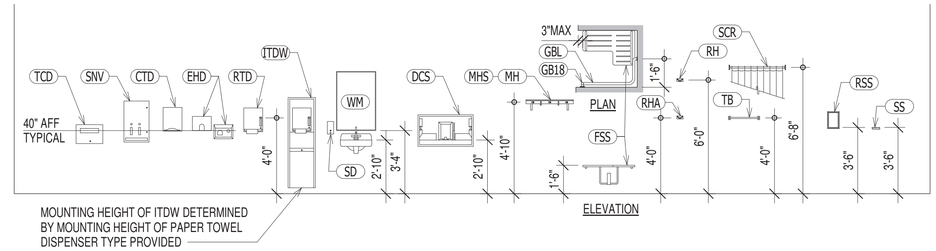

MARK	DESCRIPTION	MARK	DESCRIPTION	MARK	DESCRIPTION	MARK	DESCRIPTION
TTD	TOILET TISSUE DISPENSER	TCD	TOILET SEAT COVER DISPENSER	SD	SOAP DISPENSER - WALL MOUNTED	MHS	SHELF / MOP AND BROOM HOLDER
GB42	GRAB BAR: 42"	FSS	FOLDING SHOWER SEAT	SDC	SOAP DISPENSER - COUNTERTOP MOUNTED	MH	MOP HOOK
GB36	GRAB BAR: 36"	PTD	PAPER TOWEL DISPENSER	WM	WALL MIRROR: 18" x 36"	TB	TOWEL BAR: 18"
GB18	GRAB BAR: 18"	ITDW	INTEGRAL TOWEL DISPENSER & WASTE RECEPTACLE	WM1	WALL MIRROR (CUSTOM): SEE ELEVATION	SCR	SHOWER CURTAIN ROD
GBL	GRAB BAR: L-SHAPED 24" x 18"	CTD	PAPER TOWEL DISPENSER: "C" FOLD TYPE	RSS	RECESSED SOLID SURFACE SHOWER SHELF	RH	ROBE HOOK
SND	SANITARY NAPKIN DISPOSAL	RTD	PAPER TOWEL DISPENSER: ROLL TYPE	SS	SOLID SURFACE SHOWER SHELF	RHA	ROBE HOOK - ACCESSIBLE MOUNTING HEIGHT
SNV	SANITARY NAPKIN VENDOR	EHD	ELECTRIC HAND DRYER	DCS	DIAPER CHANGING STATION		

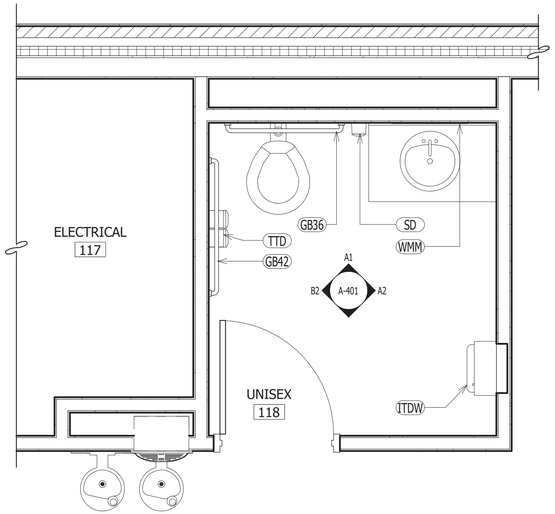

A3 ENLARGED TOILET 118 FLOOR PLAN
SCALE: 1/2" = 1'-0"

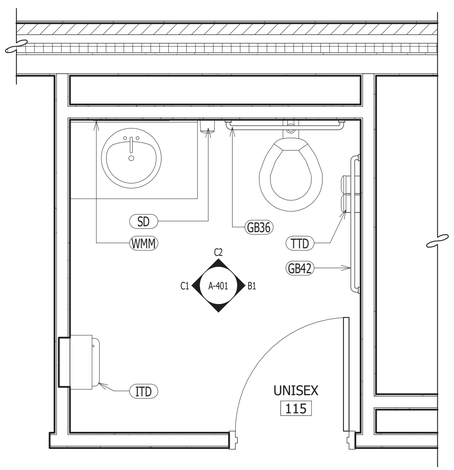

A4 ENLARGED TOILET 115 FLOOR PLAN
SCALE: 1/2" = 1'-0"

GRAPHIC SCALE: 1/2"=1'-0"
2' 0 1' 2' 4'

MBF ARCHITECTS P.A. REGISTERED ARCHITECTURE CORPORATION CERT. NO. 50679 NORTH CAROLINA NEW BERN NC

SYM	DESCRIPTION	DATE	APPR

NAVFAC

DARDEN J. EURE III REGISTERED ARCHITECT 8840 NORTH CAROLINA NEW BERN NC
08 MAY 2026 SEAL

mbf architects pa
317-C Pollock Street | New Bern, NC 28560
252.637.6373 | mbfarchitects.com
A/E INFO

APPROVED
James Gregory Hill, P.E.
FOR COMMANDER NAVFAC 5/13/2026
ACTIVITY

SATISFACTORY TO

DES	REL	DRW	ESS	CHK	DJE,III
PM/DM	SGL/MDM				
BRANCH MANAGER	DJD				
CHIEF ENG/ARCH	JWJ				
FIRE PROTECTION	HPN				

DEPARTMENT OF THE NAVY
NAVAL FACILITIES ENGINEERING SYSTEMS COMMAND
NAVAL FACILITIES ENGINEERING SYSTEMS COMMAND ~ MIDATLANTIC
MIDLANT DC CORE
NAVAL STATION - NORFOLK, VA
MARINE CORPS BASE
CAMP LEJEUNE, NC
P-1550 SOF MARINE RAIDER
BATTALION / COMPANY / TEAM FACILITIES
ENLARGED TOILET PLANS AND ELEVATIONS

SCALE: AS INDICATED
EPROJECT NO.: 1701820
CONSTR. CONTR. NO.
NAVFAC DRAWING NO. 12903774
SHEET 32 OF 122
A3
CO STG
A-401

FINAL SUBMITTAL
DRAWFORM REVISION: 25 AUGUST 2020

S:\projects\2021\2122 MIDLANT CL P-1550 SOF Marine Battalion Company\Team Facilities\2122 Design\2122 Dwgs\2122 ARCH 2023_A3.rvt
File
Print
5/9/2026 1:03:40 PM

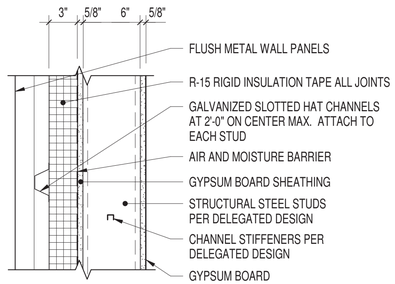

WALL - UPPER

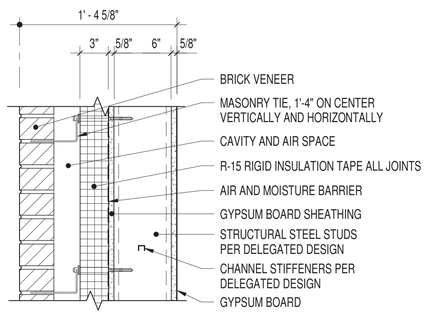

WALL - MID

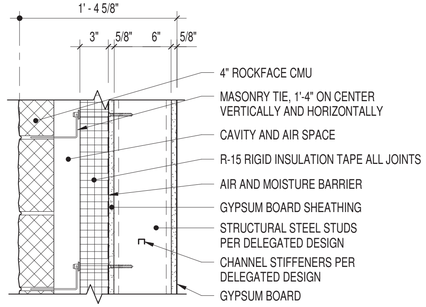

WALL - BASE

NOTES:
1. REFERENCE THE BUILDING SECTIONS FOR HEIGHT OF TRANSITION BETWEEN LOWER AND UPPER WALL CONSTRUCTION

A 6" METAL STUD EXTERIOR WALL

SCALE: 1 1/2" = 1'-0"

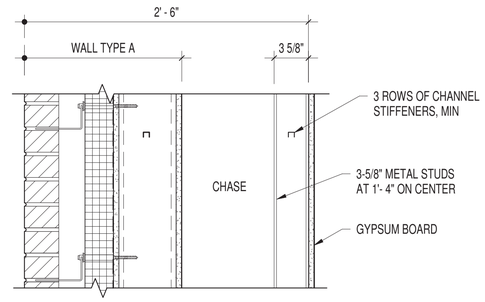

NOTES:
1. PROVIDE 5/8" CEMENTITIOUS BACKER BOARD IN LIEU OF 5/8" GYPSUM BOARD AT WALLS TO RECEIVE PORCELAIN WALL TILE.

1 EXTERIOR WALL WITH CHASE

SCALE: 1 1/2" = 1'-0"

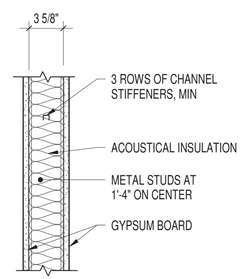

NOTES:
1. UTILIZE UL ASSEMBLY U 419 1/2 HOUR AND 1 HOUR RATED WALL LOCATIONS

B 3 5/8" INTERIOR PARTITION

SCALE: 1 1/2" = 1'-0"

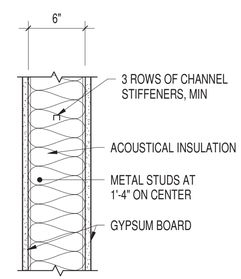

NOTES:
1. UTILIZE UL ASSEMBLY U 419 1/2 HOUR AND 1 HOUR RATED WALL LOCATIONS

C 6" INTERIOR PARTITION

SCALE: 1 1/2" = 1'-0"

WALL TYPE NOTES:

1. WALL TYPES AS INDICATED ON FLOOR PLANS
2. GYPSUM BOARD IS TO BE 5/8",TYPE X, MOISTURE RESISTANT, HIGH IMPACT UNLESS SPECIFICALLY NOTED OTHERWISE
3. PROVIDE 5/8" CEMENTITIOUS BACKER BOARD WHERE CERAMIC TILE IS SCHEDULED ON WALLS
4. SMOKE PARTITIONS AND RATED WALLS MUST BE PROPERLY SEALED TO THE UNDERSIDE OF THE DECK ABOVE. PROVIDE SCHEDULE 40 SLEEVES AT PIPE PENETRATIONS IN RATED PARTITIONS AND SEAL ANNULAR SPACE WITH RATED SEALANT. REFERENCE MECHANICAL DRAWINGS FOR MECHANICAL DUCT DAMPER LOCATIONS. REFERENCE THE LIFE SAFETY DRAWINGS FOR RATED WALL AND SMOKE PARTITION LOCATIONS
5. WALL FRAMING MUST BE EXTENDED TO THE UNDERSIDE OF THE DECK ABOVE AT ALL LOCATIONS FOR BRACING. EXTEND GYPSUM BOARD TO FULL HEIGHT OF WALLS
6. WALLS, INCLUDING GYPSUM BOARD WHERE SCHEDULED, AT MECHANICAL ROOMS, ELECTRICAL ROOMS, EQUIPMENT ROOMS, JANITOR CLOSETS, TOILETS AND CORRIDORS MUST BE EXTENDED TO THE UNDERSIDE OF THE DECK ABOVE UNLESS NOTED OTHERWISE. INSTALL AIR BARRIER SEALANT PERIMETER OF WALL

GRAPHIC SCALE: 1 1/2"=1'-0"
1' 6" 3" 0 1'

MBF ARCHITECTS P.A. REGISTERED ARCHITECTURAL CORPORATION CERT. NO. 50679 NORTH CAROLINA NEW BERN NC

A3
CO STG

FINAL SUBMITTAL

SYM	DESCRIPTION	DATE	APPR

NAVFAC

DARDEN J. EURE, III REGISTERED ARCHITECT 8840 NORTH CAROLINA NEW BERN NC
08 MAY 2026 SEAL

mbf architects pa
317-C Pollock Street | New Bern, NC 28560
252.637.6373 | mbfarchitects.com
A/E INFO

APPROVED
Name & Position, P.E.
FOR COMMANDER NAVFAC 5/13/2026
ACTIVITY

SATISFACTORY TO

DES	REL	DRW	ESS	CHK	DJE,III
PM/DM					SGL/MDM
BRANCH MANAGER					DJD
CHIEF ENG/ARCH					JWJ
FIRE PROTECTION					HPN

DEPARTMENT OF THE NAVY
NAVAL FACILITIES ENGINEERING SYSTEMS COMMAND
MIDLANT DC CORE
MARINE CORPS BASE
NAVAL FACILITIES ENGINEERING SYSTEMS COMMAND - MIDATLANTIC
NAVAL STATION - NORFOLK, VA
CAMP LEJEUNE, NC

P-1550 SOF MARINE RAIDER BATTALION / COMPANY / TEAM FACILITIES

WALL TYPE DETAILS

SCALE: AS INDICATED
EPROJECT NO.: 1701820
CONSTR. CONTR. NO.
NAVFAC DRAWING NO. 12903775
SHEET 33 OF 122
A-501

DRAWFORM REVISION: 25 AUGUST 2020

S:\projects\2021\2122 MIDLANT CL P-1550 SOF Marine Battalion Company\Team Facilities\2122 Design\2122 Dwgs\2122 ARCH 2023_A3.rvt
File
Print
5/9/2026 1:03:40 PM

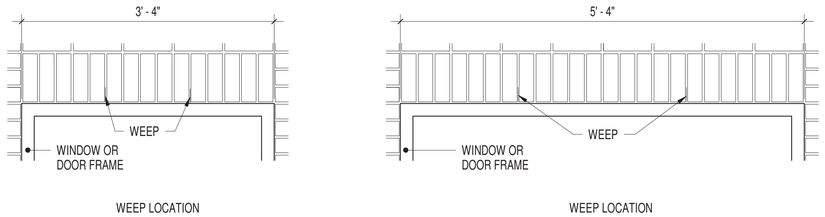

D2 HEAD JOINT COURSING DETAIL

SCALE: 1" = 1'-0"

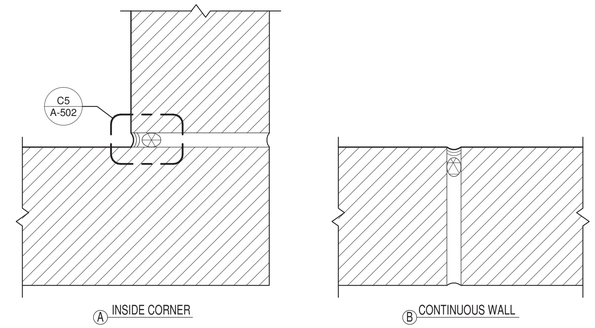

C3 CONTROL JOINTS DETAILS

SCALE: 6" = 1'-0"

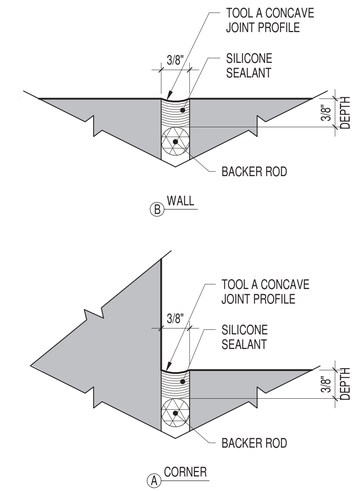

C5 SEALANT POCKET DETAILS

SCALE: 1" = 1"

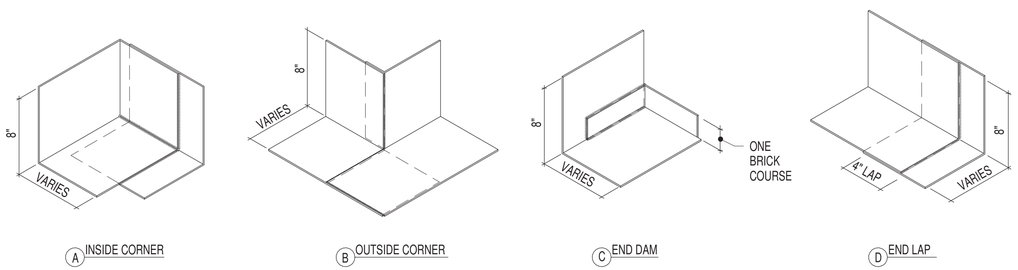

NOTES:
1. COPPER FABRIC FLASHING CORNERS ARE TO BE SIMILAR AND SEALED WITH THE RECOMMENDED ADHESIVE OF THE MANUFACTURER
2. COPPER FABRIC FLASHING JOINTS SHALL OVERLAP 6" AND BE SEALED WITH RECOMMENDED ADHESIVE OF THE MANUFACTURER
3. EXTEND FLASHING 8" BEYOND OPENINGS
4. PROVIDE A TOOLED BEAD OF SYSTEM SEALANT AT MEMBRANE LAPS AND SPLICES

B1 SELF ADHERING FLASHING DETAIL

SCALE: 1 1/2" = 1'-0"

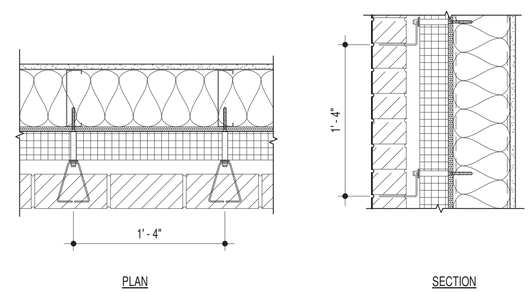

B3 VENEER ANCHOR DETAIL MTL STD WALL

SCALE: 1 1/2" = 1'-0"

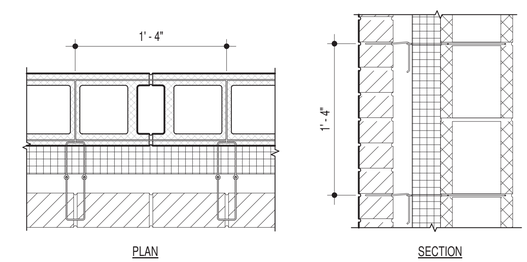

B5 VENEER ANCHOR DETAIL CMU WALL

SCALE: 1 1/2" = 1'-0"

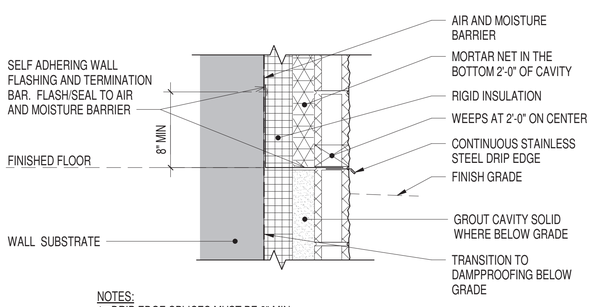

NOTES:
1. DRIP EDGE SPLICES MUST BE 3" MIN
2. PEEL & STICK WALL FLASHING CONFIGURATION MAY VARY SLIGHTLY AS ILLUSTRATED IN WALL SECTIONS AND DETAILS
3. VENEER WALL TIES AND JOINT REINFORCEMENT OMITTED FOR CLARITY
4. 4. TRANSITION TO COMPATIBLE DAMPPROOFING BELOW GRADE. PROVIDE CONTINUOUS SYSTEM TRANSITION TO AIR AND MOISTURE BARRIER

A1 THROUGH WALL FLASHING DETAIL

SCALE: 1 1/2" = 1'-0"

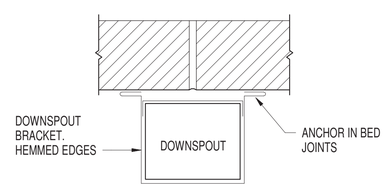

A3 DOWNSPOUT STRAP DETAIL

SCALE: 3" = 1'-0"

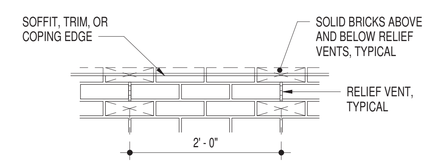

NOTES:
1. ALIGN RELIEF VENTS WITH WEEP HOLES IN WALL BELOW

A4 HEAD JOINT RELIEF VENT DETAIL

SCALE: 1" = 1'-0"

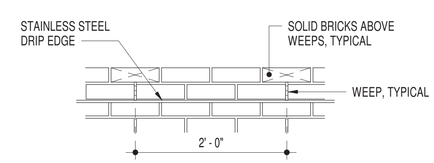

NOTES:
1. CENTER DRIP EDGE LAPS BETWEEN WEEPS

A5 WEEP VENT DETAIL

SCALE: 1" = 1'-0"

GRAPHIC SCALE: 1"=1'-0" (1' 0 1' 2')
GRAPHIC SCALE: 1 1/2"=1'-0" (1' 6" 3" 0 1')
GRAPHIC SCALE: 3"=1'-0" (0 3" 6" 1")
GRAPHIC SCALE: 6"=1'-0" (0 3" 6")
GRAPHIC SCALE: 1"=1" (0 1" 2")

MBF ARCHITECTS P.A. REGISTERED ARCHITECTURAL CORPORATION NORTH CAROLINA CERT. NO. 50679 NEW BERN NC

A3
CO STG

FINAL SUBMITTAL

SYM	DESCRIPTION	DATE	APPR

NAVFAC

DARDEN J. EURE, III REGISTERED ARCHITECT 8640 NORTH CAROLINA NEW BERN NC
08 MAY 2026 SEAL

mbf architects pa
317-C Pollock Street | New Bern, NC 28560
252.637.6373 | mbfarchitects.com
A/E INFO

APPROVED
FOR COMMANDER NAVFAC 5/19/2026
ACTIVITY

SATISFACTORY TO
DES REL DRW ESS CHK DJE,III
PM/DM SGL/MDM
BRANCH MANAGER DJD
CHIEF ENG/ARCH JWJ
FIRE PROTECTION HPN

DEPARTMENT OF THE NAVY
NAVAL FACILITIES ENGINEERING SYSTEMS COMMAND
MIDLANT DC CORE
MARINE CORPS BASE
NAVAL FACILITIES ENGINEERING SYSTEMS COMMAND ~ MIDATLANTIC
NAVAL STATION - NORFOLK, VA.
CAMP LEJEUNE, NC

P-1550 SOF MARINE RAIDER BATTALION / COMPANY / TEAM FACILITIES

MASONRY DETAILS

SCALE: AS INDICATED
EPROJECT NO.: 1701820
CONSTR. CONTR. NO.
NAVFAC DRAWING NO. 12903776
SHEET 34 OF 122
A-502

DRAWFORM REVISION: 25 AUGUST 2020

S:\projects\2021\2122 MIDLANT CL P-1550 SOF Marine Battalion CompanyTeam Facilities\2122 Design\2122 Dwgs\2122 ARCH 2023_A3.rvt
5/9/2026 1:03:41 PM
File
Print

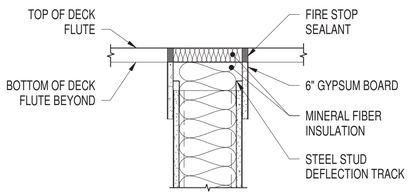

NOTES:
1. DEFLECTION TRACK SHALL MAINTAIN WALL RATING
2. MAXIMUM DEFLECTION OF 1/2" AT ELEVATED SLABS
3. MAXIMUM DEFLECTION OF 1/2" AT ROOF DECKING
4. DETAIL IS SIMILAR AT SLOPED ROOF DECKING

C1 1 HOUR RATED DEFLECTION TRACK DETAIL

SCALE: 1 1/2" = 1'-0"

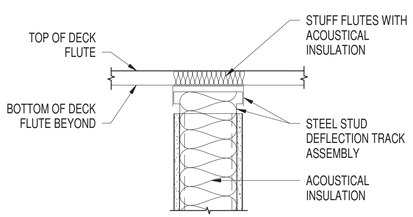

NOTES:
1. MAXIMUM DEFLECTION OF 1/2" AT ELEVATED SLABS
2. MAXIMUM DEFLECTION OF 1/2" AT ROOF DECKING
3. DETAIL IS SIMILAR AT SLOPED ROOF DECKING

A1 PARTITION DEFLECTION TRACK DETAIL

SCALE: 1 1/2" = 1'-0"

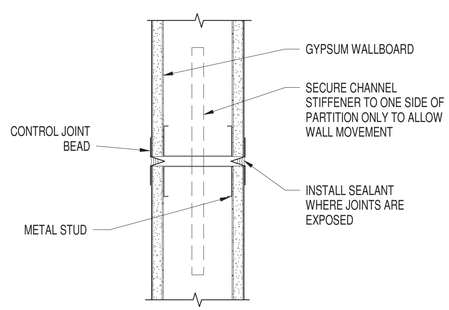

NOTES:
1. PROVIDE CONTROL JOINTS FOR EVERY 30'-0" OF CONTINUOUS WALL
2. ALIGN WITH THE CORNER OF DOOR FRAMES WHERE POSSIBLE
3. ACOUSTICAL INSULATION IS OMITTED FOR CLARITY

A3 GYPSUM BOARD CONTROL JOINT DETAIL

SCALE: 3" = 1'-0"

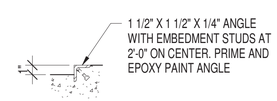

NOTES:
1. SLOPE DEPRESSION TOWARDS THE EXTERIOR AT 1/8" PER FOOT TO SHED WATER

A4 DEPRESSED SLAB DETAIL

SCALE: 1 1/2" = 1'-0"

GRAPHIC SCALE: 3/4"=1'-0"
1' 0 1' 2' 3'

GRAPHIC SCALE: 1 1/2"=1'-0"
1' 6" 3" 0 1'

MBF ARCHITECTS P.A. REGISTERED ARCHITECTURAL CORPORATION CERT. NO. 50679 NORTH CAROLINA NEW BERN NC

SYM	DESCRIPTION	DATE	APPR

NAVFAC

DARDEN J. EURE, III REGISTERED ARCHITECT 8840 NORTH CAROLINA NEW BERN NC

08 MAY 2026 SEAL

mbf architects pa
317-C Pollock Street | New Bern, NC 28560
252.637.6373 | mbfarchitects.com
A/E INFO

APPROVED
JOHN E. DONOHUE, R.A.
FOR COMMANDER NAVFAC 5/13/2026
ACTIVITY

SATISFACTORY TO

DES	REL	DRW	ESS	CHK	DJE,III

PM/DM	SGL/MDM
BRANCH MANAGER	DJD
CHIEF ENG/ARCH	JWJ
FIRE PROTECTION	HPN

DEPARTMENT OF THE NAVY
NAVAL FACILITIES ENGINEERING SYSTEMS COMMAND
MIDLANT DC CORE
NAVAL FACILITIES ENGINEERING SYSTEMS COMMAND ~ MIDATLANTIC
NAVAL STATION - NORFOLK, VA.
MARINE CORPS BASE
CAMP LEJEUNE, NC
P-1550 SOF MARINE RAIDER BATTALION / COMPANY / TEAM FACILITIES
MISCELLANEOUS DETAILS

SCALE:	AS INDICATED
EPROJECT NO.:	1701820
CONSTR. CONTR. NO.	
NAVFAC DRAWING NO.	12903777
SHEET	35 OF 122

A3
CO STG
A-503

FINAL SUBMITTAL
DRAWFORM REVISION: 25 AUGUST 2020

S:\projects\2021\2122 MIDLANT CL P-1550 SOF Marine Battalion Company Team Facilities\2122 Design\2122 Dwgs\2122 ARCH 2023_A3.rvt
5/9/2026 1:03:41 PM
File
Print

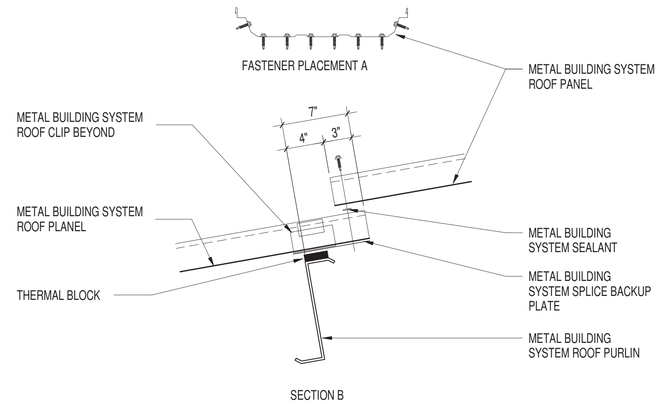

NOTES:
1. ROOF INSULATION OMITTED FOR CLARITY

C3 ROOF PANEL SPLICE

SCALE: 1 1/2" = 1'-0"

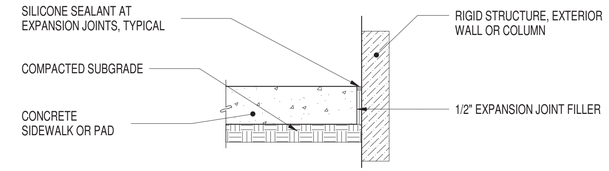

D5 EXPANISION JOINT DETAIL

SCALE: 1 1/2" = 1'-0"

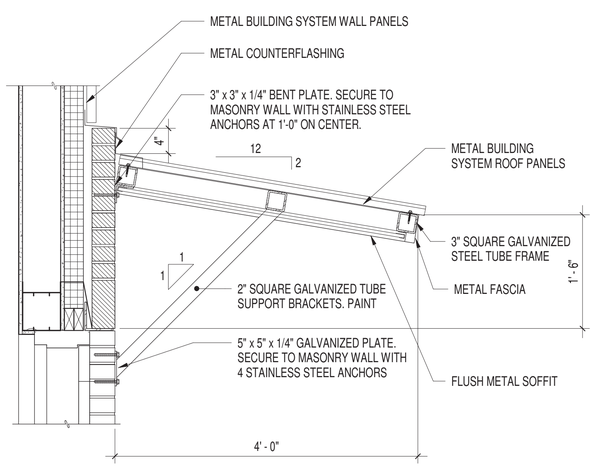

NOTES:
1. CANOPY DESIGN MUST BE INCLUDED IN THE PEB DELEGATED DESIGN
2. PROVIDE PEB FRAMING AND COMPONENTS TO SUPPORT CANOPY

A1 METAL BUILDING CANOPY DETAIL

SCALE: 1" = 1'-0"

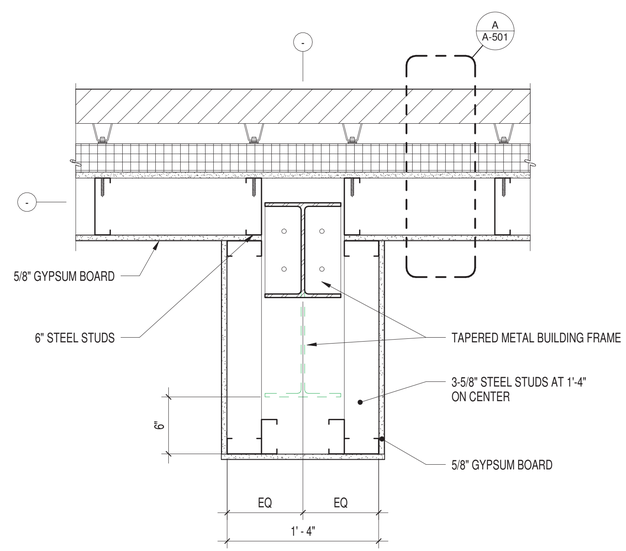

A3 TYPICAL INTERIOR COLUMN ENCLOSURE

SCALE: 1 1/2" = 1'-0"

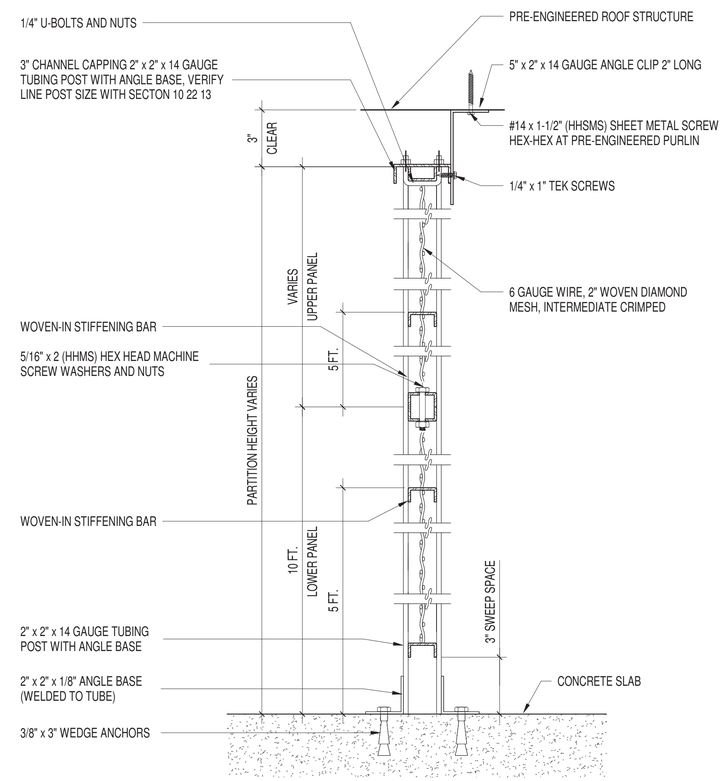

NOTES:
1. PROVIDE BLOCK-OUTS FOR MECHANICAL DUCT, FIRE PROTECTION PIPING AND SIMILAR PENETRATIONS

A5 PARTITION WIRE MESH

SCALE: 3" = 1'-0"

GRAPHIC SCALE: 1"=1'-0"
1' 0 1' 2'

GRAPHIC SCALE: 1 1/2"=1'-0"
1' 6" 3" 0 1'

GRAPHIC SCALE: 3"=1'-0"
0 3" 6" 1'

MBF ARCHITECTS P.A. REGISTERED ARCHITECTURAL CORPORATION CERT. NO. 50679 NORTH CAROLINA NEW BERN, NC

SYM	DESCRIPTION	DATE	APPR

NAVFAC

DARDEN J. EURE, III REGISTERED ARCHITECT 8040 NORTH CAROLINA NEW BERN, NC
08 MAY 2026 SEAL

mbf architects pa
317-C Pollock Street | New Bern, NC 28560
252.637.6373 | mbfarchitects.com
A/E INFO

APPROVED
FOR COMMANDER NAVFAC 5/19/2026
ACTIVITY

SATISFACTORY TO

DES	REL	DRW	ESS	CHK	DJE,III
PM/DM					SGL/MDM
BRANCH MANAGER					DJD
CHIEF ENG/ARCH					JWJ
FIRE PROTECTION					HPN

DEPARTMENT OF THE NAVY
NAVAL FACILITIES ENGINEERING SYSTEMS COMMAND
MIDLANT DC CORE
MARINE CORPS BASE
NAVAL FACILITIES ENGINEERING SYSTEMS COMMAND ~ MIDATLANTIC
NAVAL STATION - NORFOLK, VA
CAMP LEJEUNE, NC
P-1550 SOF MARINE RAIDER BATTALION / COMPANY / TEAM FACILITIES
MISCELLANEOUS DETAILS

SCALE:	AS INDICATED
EPROJECT NO.:	1701820
CONSTR. CONTR. NO.	
NAVFAC DRAWING NO.	12903778
SHEET	36 OF 122

A3
CO STG
A-504

FINAL SUBMITTAL
DRAWFORM REVISION: 25 AUGUST 2020

S:\projects\2021\2122 MIDLANT CL P-1550 SOF Marine Battalion Company Team Facilities\2122 Design\2122 Dwgs\2122 ARCH 2023_A3.rvt
5/9/2026 1:03:42 PM
File
Print

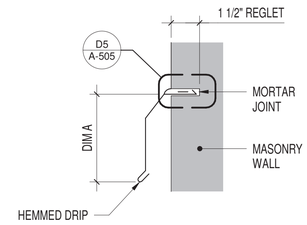

NOTES:
1. INSTALL INTEGRAL CLOSURE AT EXPOSED ENDS
2. FIELD VERIFY A BREAK PROFILE THAT IS SUITABLE FOR ALL JOB CONDITIONS PRIOR TO FABRICATION
3. DIM A = 5"

D3 COUNTERFLASHING DETAIL

SCALE: 3" = 1'-0"

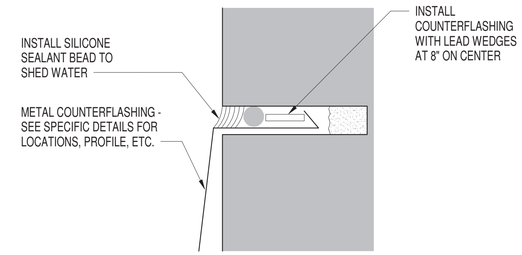

D5 TYPICAL REGLET DETAIL

SCALE: FULL SCALE

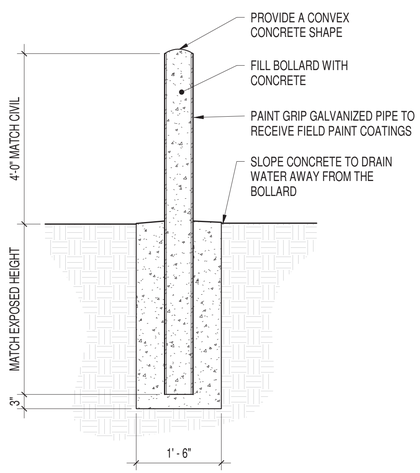

NOTES:
1. BOLLARD SHALL BE 8" IN DIAMETER

A1 YARD BOLLARD DETAIL

SCALE: 3/4" = 1'-0"

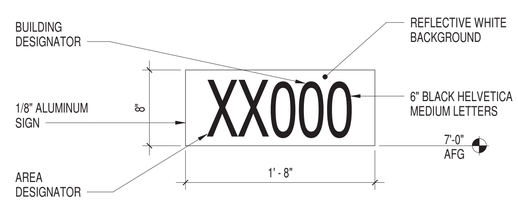

NOTES:
1. REFERENCE THE SIGN POLICY FOR MARINE CORPS BASE CAMP LEJEUNE, BASE ORDER 11014.3, DATED 28 AUGUST 2003
2. ADHERE SIGN TO EXTERIOR WALL WITH SILICONE ADHESIVE
3. FINAL TYPE AND LOCATION WILL BE PROVIDED BY THE ROICC

A3 BUILDING IDENTIFICATION SIGN

SCALE: 1 1/2" = 1'-0"

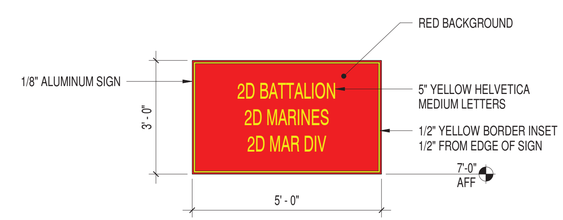

NOTES:
1. REFERENCE THE SIGN POLICY FOR MARINE CORPS BASE CAMP LEJEUNE, BASE ORDER 11014.3, DATED 28 AUGUST 2003
2. AFFIX UNIT SIGN TO EXTERIOR WALL WITH A MINIMUM OF THREE (3) EXPANSION ANCHORS PER SIDE
3. ANCHORS MUST BE SET INTO MORTAR JOINTS. DO NOT DAMAGE BRICK
4. FINAL TYPE AND LOCATION WILL BE PROVIDED BY THE ROICC

A4 UNIT SIGNAGE

SCALE: 1/2" = 1'-0"

GRAPHIC SCALE: 3/4"=1'-0" (1' 0 1' 2' 3')

GRAPHIC SCALE: 1"=1'-0" (1' 0 1' 2')

GRAPHIC SCALE: 1 1/2"=1'-0" (1' 6" 3" 0 1')

GRAPHIC SCALE: 3"=1'-0" (0 3" 6" 1')

MBF ARCHITECTS P.A. REGISTERED ARCHITECTURAL CORPORATION CERT. NO. 50679 NORTH CAROLINA NEW BERN N.C.

SYM	DESCRIPTION	DATE	APPR		

NAVFAC

DARDEN J. EURE III REGISTERED ARCHITECT 8840 NORTH CAROLINA NEW BERN NC

08 MAY 2026 SEAL

mbf architects pa
317-C Pollock Street | New Bern, NC 28560
252.637.6373 | mbfarchitects.com
A/E INFO

APPROVED
FOR COMMANDER NAVFAC 5/13/2026
ACTIVITY

SATISFACTORY TO

DES	REL	DRW	ESS	CHK	DJE,III
PM/DM					SGL/MDM
BRANCH MANAGER					DJD
CHIEF ENG/ARCH					JWJ
FIRE PROTECTION					HPN

DEPARTMENT OF THE NAVY
NAVAL FACILITIES ENGINEERING SYSTEMS COMMAND
MIDLANT DC CORE
MARINE CORPS BASE
NAVAL FACILITIES ENGINEERING SYSTEMS COMMAND ~ MIDATLANTIC
NAVAL STATION - NORFOLK, VA
CAMP LEJEUNE, NC
P-1550 SOF MARINE RAIDER BATTALION / COMPANY / TEAM FACILITIES
MISCELLANEOUS DETAILS

SCALE: AS INDICATED
EPROJECT NO.: 1701820
CONSTR. CONTR. NO.
NAVFAC DRAWING NO. 12903779
SHEET 37 OF 122
A3
CO STG
A-505
FINAL SUBMITTAL
DRAWFORM REVISION: 25 AUGUST 2020

S:\projects\2021\2122 MIDLANT CL P-1550 SOF Marine Battalion CompanyTeam Facilities\2122 Design\2122 Dwgs\2122 ARCH 2023_A3.rvt
File
Print 5/9/2026 1:03:42 PM

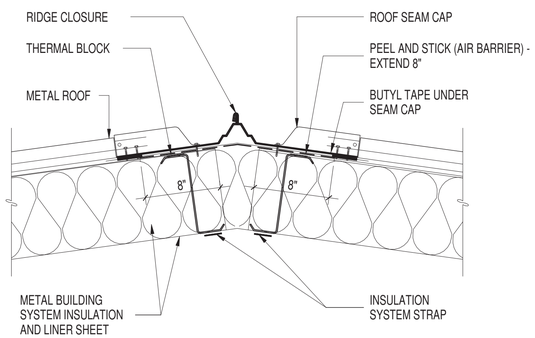

C1 ROOF RIDGE DETAIL

SCALE: 1 1/2" = 1'-0"

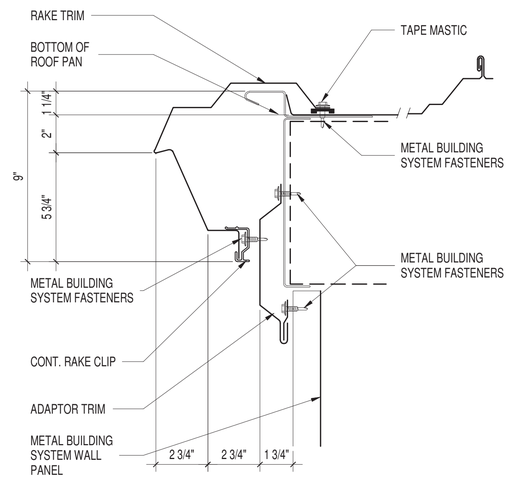

C3 RAKE DETAIL

SCALE: 3" = 1'-0"

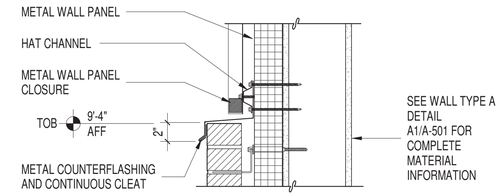

NOTES:
1. PREDRILL FASTENERS IN BRICK MASONRY
2. FASTEN CLEAT AT 2'-0" ON CENTER
3. COUNTERFLASHING LAP JOINTS MUST PROVIDE 4" MINIMUM OVERLAP. PROVIDE CONCEALED SEALANT AT LAPS

C4 COUNTERFLASHING DETAIL

SCALE: 1 1/2" = 1'-0"

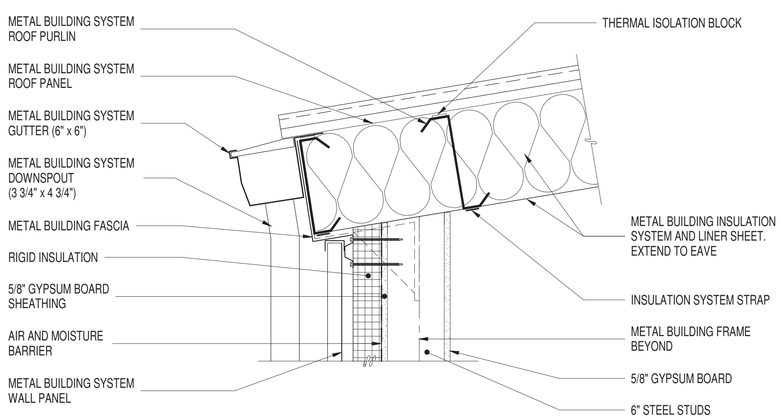

A2 TYPICAL EAVE DETAIL

SCALE: 1 1/2" = 1'-0"

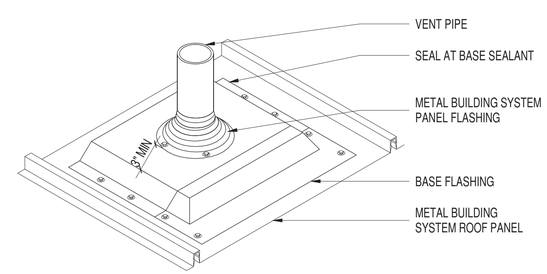

NOTE:
1. PENETRATIONS SHOULD BE CENTERED IN PANELS
2. ATTACH ROOF JACK TO STANDING SEAM ROOF PANEL ONLY

A4 PIPE FLASHING

SCALE: 3" = 1'-0"

GRAPHIC SCALE: 1 1/2"=1'-0"
1' 6" 3" 0 1'

GRAPHIC SCALE: 3"=1'-0"
0 3" 6" 1"

MBF ARCHITECTS P.A. REGISTERED ARCHITECTURAL CORPORATION CERT. NO. 50679 NORTH CAROLINA NEW BERN N.C.

SYM	DESCRIPTION	DATE	APPR

NAVFAC

DARDEN J. EURE III REGISTERED ARCHITECT 8640 NORTH CAROLINA NEW BERN NC
08 MAY 2026 SEAL

mbf architects pa
317-C Pollock Street | New Bern, NC 28560
252.637.6373 | mbfarchitects.com
A/E INFO

APPROVED
FOR COMMANDER NAVFAC 5/15/2026
ACTIVITY

SATISFACTORY TO

DES	REL	DRW	ESS	CHK	DJE,III
PM/DM					SGL/MDM
BRANCH MANAGER					DJD
CHIEF ENG/ARCH					JWJ
FIRE PROTECTION					HPN

DEPARTMENT OF THE NAVY
NAVAL FACILITIES ENGINEERING SYSTEMS COMMAND
MIDLANT DC CORE
MARINE CORPS BASE
NAVAL FACILITIES ENGINEERING SYSTEMS COMMAND ~ MIDATLANTIC
NAVAL STATION - NORFOLK, VA
CAMP LEJEUNE, NC
P-1550 SOF MARINE RAIDER BATTALION / COMPANY / TEAM FACILITIES
ROOF DETAILS

SCALE:	AS INDICATED
EPROJECT NO.:	1701820
CONSTR. CONTR. NO.	
NAVFAC DRAWING NO.	12903780
SHEET	38 OF 122

A3
CO STG
A-506

FINAL SUBMITTAL
DRAWFORM REVISION: 25 AUGUST 2020

S:\projects\2021\2122 MIDLANT CL P-1550 SOF Marine Battalion CompanyTeam Facilities\2122 Design\2122 Dwgs\2122 ARCH 2023_A3.rvt
File 5/9/2026 1:03:43 PM
Print

DOOR AND FRAME SCHEDULE

MARK	DOOR TYPE	DOOR WIDTH	DOOR HT.	DOOR THK.	DOOR MATERIAL	GLAZING	FRAME TYPE	FRAME MATERIAL	HEAD	JAMB	SILL	FIRE RATING	STC	ACCESS CONTROL	IDS	REMARKS
101A	F	3' - 0"	7' - 0"	1 3/4"	STEEL		B	STEEL	A5A/A-603	A5B/A-603	A5C/A-603				YES	
101B	F	3' - 0"	7' - 0"	1 3/4"	STEEL		B	STEEL	A5A/A-603	A5B/A-603	A5C/A-603				YES	
101C	F	3' - 0"	7' - 0"	1 3/4"	STEEL		B	STEEL	A5A/A-603	A5B/A-603	A5C/A-603				YES	
101D	F	3' - 0"	7' - 0"	1 3/4"	STEEL		B	STEEL	A5A/A-603	A5B/A-603	A5C/A-603			YES	YES	IN CARD READER
101E	OHD	12' - 0"	12' - 0"	3"	STEEL		MANUF		A2A/A-604	A2B & C/A-604					YES	
101F	F	3' - 0"	7' - 0"	1 3/4"	STEEL		B	STEEL	A5A/A-603	A5B/A-603	A5C/A-603				YES	
101G	F	3' - 0"	7' - 0"	1 3/4"	STEEL		B	STEEL	A5A/A-603	A5B/A-603	A5C/A-603				YES	
108A	F	3' - 0"	7' - 0"	1 3/4"	STEEL		B	STEEL	A5A/A-603	A5B/A-603	A5C/A-603				YES	
108B	F	3' - 0"	7' - 0"	1 3/4"	STEEL		B	STEEL	A5A/A-603	A5B/A-603	A5C/A-603				YES	
108C	OHD	12' - 0"	12' - 0"	3"	STEEL		MANUF		A2A/A-604	A2B & C/A-604					YES	
108D	F	3' - 0"	7' - 0"	1 3/4"	STEEL		B	STEEL	A5A/A-603	A5B/A-603	A5C/A-603			YES	YES	IN CARD READER
109A	F	3' - 0"	7' - 0"	1 3/4"	STEEL		B	STEEL	A5A/A-603	A5B/A-603	A5C/A-603					
109B	OHD	10' - 0"	12' - 0"	3"	STEEL		MANUF		A2A/A-604	A2B & C/A-604						
110A	F	6' - 0"	7' - 0"	1 3/4"	STEEL		C	STEEL	D5A/A-603	D5B/A-603						
111A	F	6' - 0"	7' - 0"	1 3/4"	STEEL		D	STEEL	A5A/A-603	A5B/A-603	A5C/A-603					
112A	F	6' - 0"	7' - 0"	1 3/4"	STEEL		D	STEEL	A5A/A-603	A5B/A-603	A5C/A-603					
113A	F	3' - 0"	7' - 0"	1 3/4"	WOOD		A	STEEL	D5A/A-603	D5B/A-603						
114A	F	3' - 0"	7' - 0"	1 3/4"	WOOD		A	STEEL	D5A/A-603	D5B/A-603						
115A	F	3' - 0"	7' - 0"	1 3/4"	WOOD		A	STEEL	D5A/A-603	D5B/A-603						
116A	F	3' - 0"	7' - 0"	1 3/4"	WOOD		A	STEEL	D5A/A-603	D5B/A-603						
117A	F	3' - 0"	7' - 0"	1 3/4"	WOOD		A	STEEL	D5A/A-603	D5B/A-603						
118A	F	3' - 0"	7' - 0"	1 3/4"	WOOD		A	STEEL	D5A/A-603	D5B/A-603						
119A	F	3' - 0"	7' - 0"	1 3/4"	WOOD		A	STEEL	D5A/A-603	D5B/A-603						

DOOR AND FRAME SCHEDULE NOTES:
1. STEEL FRAMES ARE LEVEL 3 UNLESS NOTED OTHERWISE

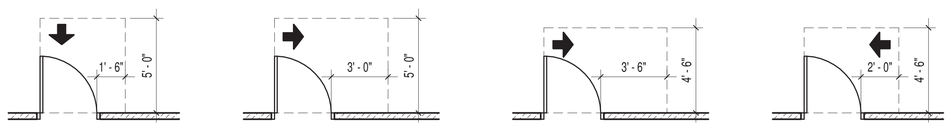

FRONT APPROACH - PULL SIDE | HINGE APPROACH - PULL SIDE | HINGE APPROACH - PULL SIDE | LATCH APPROACH - PULL SIDE

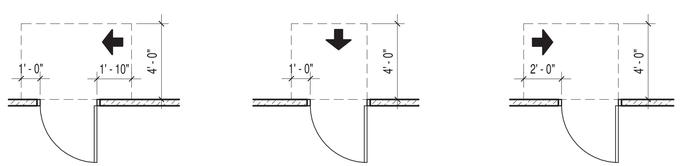

HINGE APPROACH - PUSH SIDE | FRONT APPROACH - PUSH SIDE | HINGE APPROACH - PUSH SIDE

NOTES:
1. REFERENCE SECTION 404.2.3.2, ANSI A117.1

B2 MANEUVERING CLEARANCE AT DOORS

SCALE: 1/4" = 1'-0"

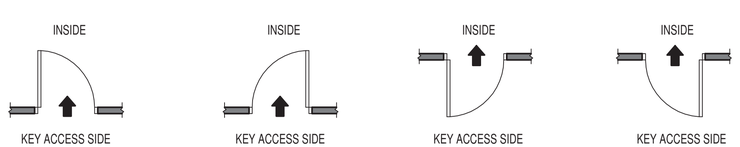

LEFT HAND | RIGHT HAND | LEFT HAND REVERSE | RIGHT HAND REVERSE

A2 DOOR SWING AND HANDING DETAIL

SCALE: 1/4" = 1'-0"

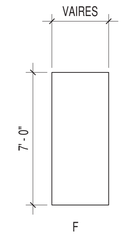

D4 DOOR DIMENSIONS

SCALE: 1/4" = 1'-0"

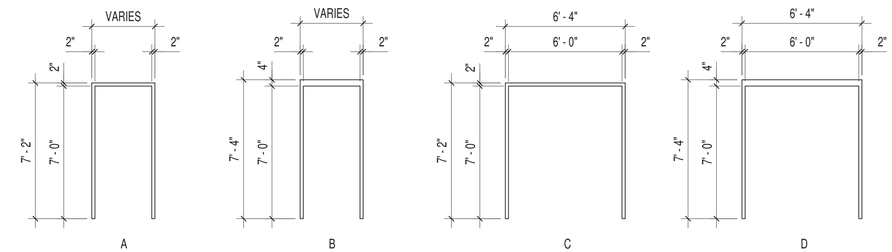

C4 STEEL FRAME DIMENSIONS

SCALE: 1/4" = 1'-0"

GRAPHIC SCALE: 1/4"=1'-0"
4' 0 2' 4' 8'

MBF ARCHITECTS P.A. REGISTERED ARCHITECTURAL CORPORATION CERT. NO. 50679 NORTH CAROLINA NEW BERN N.C.

SYM	DESCRIPTION	DATE	APPR

NAVFAC

DARDEN J. EURE III REGISTERED ARCHITECT 8640 NORTH CAROLINA NEW BERN NC
08 MAY 2026 SEAL

mbf architects pa
317-C Pollock Street | New Bern, NC 28560
252.637.6373 | mbfarchitects.com
A/E INFO

APPROVED
FOR COMMANDER NAVFAC 5/13/2026
ACTIVITY

SATISFACTORY TO
DES REL DRW ESS CHK DJE,III
PM/DM SGL/MDM
BRANCH MANAGER DJD
CHIEF ENG/ARCH JWJ
FIRE PROTECTION HPN

DEPARTMENT OF THE NAVY
NAVAL FACILITIES ENGINEERING SYSTEMS COMMAND
MIDLANT DC CORE
MARINE CORPS BASE
NAVAL FACILITIES ENGINEERING SYSTEMS COMMAND ~ MIDATLANTIC
NAVAL STATION - NORFOLK, VA
CAMP LEJEUNE, NC
P-1550 SOF MARINE RAIDER BATTALION / COMPANY / TEAM FACILITIES
DOOR AND FRAME SCHEDULE

SCALE: AS INDICATED
EPROJECT NO.: 1701820
CONSTR. CONTR. NO.
NAVFAC DRAWING NO. 12903781
SHEET 39 OF 122
A3
CO STG
A-601
FINAL SUBMITTAL
DRAWFORM REVISION: 25 AUGUST 2020

S:\projects\2021\2122 MIDLANT CL P-1550 SOF Marine Battalion CompanyTeam Facilities\2122 Design\2122 Dwgs\2122 ARCH 2023_A3.rvt
5/9/2026 1:03:43 PM
File
Print

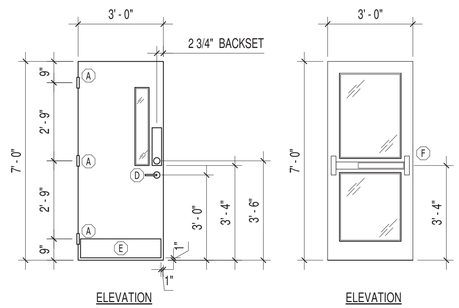

MARK	DESCRIPTION
A	4 1/2"x4 1/2" BUTT HINGE
B	NOT USED
C	NOT USED
D	TRIM, 2 3/4" BACKSET
E	KICK OR MOP PLATE, 2'-10"x8" OR 2'-10"x4"
F	PANIC BAR EXIT DEVICE

SCHEDULE

NOTES:
1. REFERENCE THE TECHNICAL SPECIFICATIONS FOR CLEARANCE DIMENSIONS AND DOOR BEVELING

D1 HARDWARE MOUNTING DIMENSIONS
SCALE: 3/8" = 1'-0"

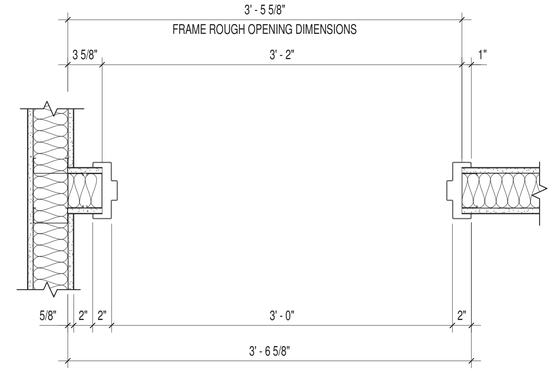

NOTES:
1. TYPICAL DOOR LAYOUT UNLESS SPECIFICALLY DIMENSIONED OR ILLUSTRATED OTHERWISE

D3 TYPICAL DOOR FRAMING DETAIL
SCALE: 1 1/2" = 1'-0"

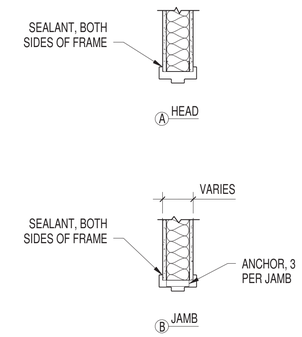

D5 INTERIOR STEEL FRAME DETAILS
SCALE: 1" = 1'-0"

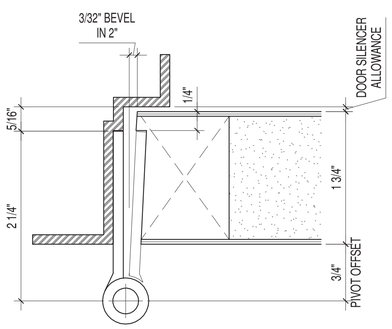

NOTES:
1. STEEL DOOR DETAILS ARE SIMILAR

A1 HINGE DETAIL
SCALE: 1" = 1"

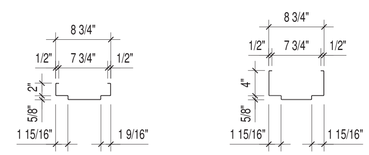

NOTES:
1. FRAME JAMB DIMENSIONS FOR EXTERIOR WALLS

EXTERIOR

NOTES:
1. FRAME HEAD DIMENSIONS FOR EXTERIOR WALLS

EXTERIOR

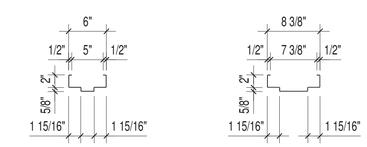

NOTES:
1. FRAME DIMENSIONS FOR INTERIOR 3 5/8" PARTITION WALLS

INTERIOR

NOTES:
1. FRAME DIMENSIONS FOR INTERIOR 6" PARTITION WALLS

INTERIOR

NOTES:
1. TAP AND DRILL, PRIME AND FINISH PAINT GLASS STOPS PRIOR TO INSTALLING GLAZING
2. TYPICALLY, GLAZING STOPS ARE LOCATED ON THE SAME SIDE OF THE FRAME AS THE DOOR. IN CORRIDORS, SPECIFICALLY TAG IN SWINGING DOOR FRAMES SO THAT GLAZING STOPS ARE ACCESSIBLE FROM THE CORRIDOR SIDE

A2 STEEL FRAME SECTIONS
SCALE: 1" = 1'-0"

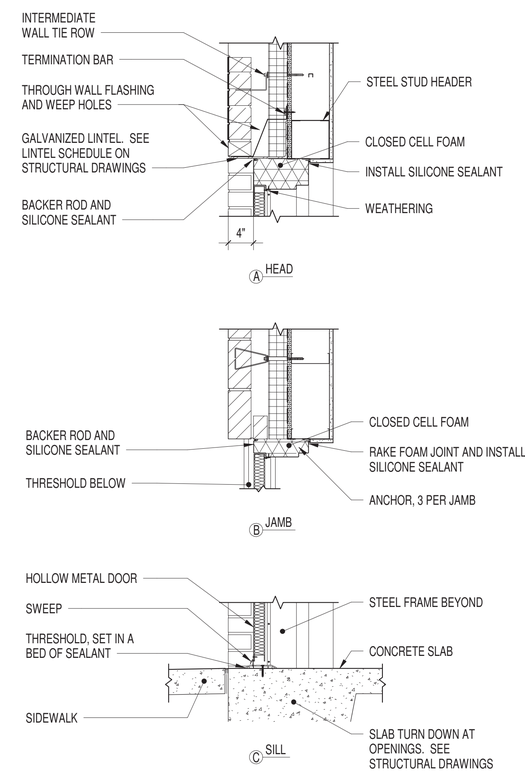

A5 EXTERIOR DOOR DETAILS AT STEEL STUD WALLS
SCALE: 1" = 1'-0"

GRAPHIC SCALE: 3/8"=1'-0" (3' 0 2' 6')
GRAPHIC SCALE: 1"=1'-0" (1' 0 1' 2')
GRAPHIC SCALE: 1 1/2"=1'-0" (1' 6" 3" 0 1')
GRAPHIC SCALE: 1"=1" (0 1" 2")

MBF ARCHITECTS P.A. REGISTERED ARCHITECTURAL CORPORATION CERT. NO. 50679 NORTH CAROLINA NEW BERN, N.C.

APPR	
DATE	
DESCRIPTION	
SYM	

NAVFAC

DARDEN J. EURE, III REGISTERED ARCHITECT 8840 NORTH CAROLINA NEW BERN, NC
08 MAY 2026 SEAL

mbf architects pa
317-C Pollock Street | New Bern, NC 28560
252.637.6373 | mbfarchitects.com
A/E INFO

APPROVED
FOR COMMANDER NAVFAC 5/13/2026
ACTIVITY

SATISFACTORY TO
DES REL DRW ESS CHK DJE,III
PM/DM SGL/MDM
BRANCH MANAGER DJD
CHIEF ENG/ARCH JWJ
FIRE PROTECTION HPN

DEPARTMENT OF THE NAVY
NAVAL FACILITIES ENGINEERING SYSTEMS COMMAND
MIDLANT DC CORE
MARINE CORPS BASE
NAVAL FACILITIES ENGINEERING SYSTEMS COMMAND ~ MIDATLANTIC
NAVAL STATION - NORFOLK, VA.
CAMP LEJEUNE, NC
P-1550 SOF MARINE RAIDER BATTALION / COMPANY / TEAM FACILITIES
DOOR AND FRAME DETAILS

SCALE: AS INDICATED
EPROJECT NO.: 1701820
CONSTR. CONTR. NO.
NAVFAC DRAWING NO. 12903782
SHEET 40 OF 122
A3
CO STG
A-602
FINAL SUBMITTAL
DRAWFORM REVISION: 25 AUGUST 2020

S:\projects\2021\2122 MIDLANT CL P-1550 SOF Marine Battalion Company Team Facilities\2122 Design\2122 Dwgs\2122 ARCH 2023_A3.rvt
File
Print 5/9/2026 1:03:44 PM

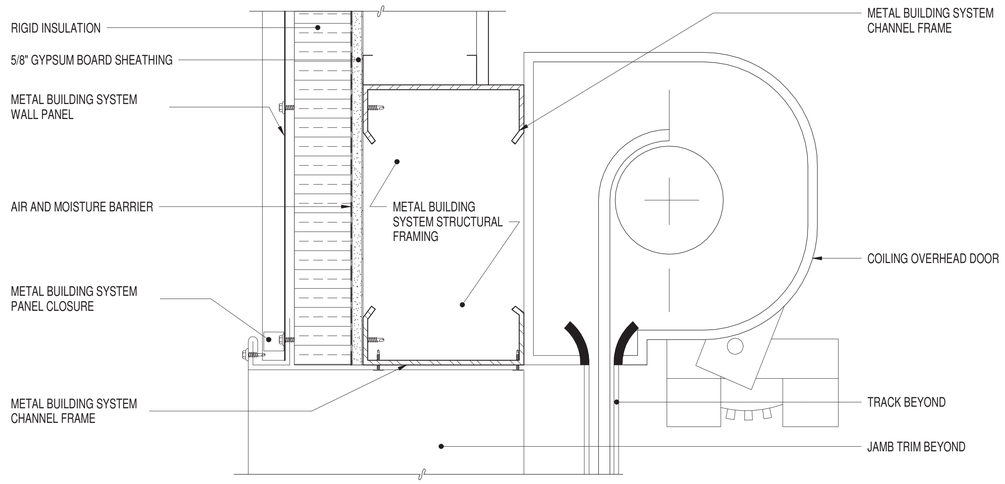

HEAD A

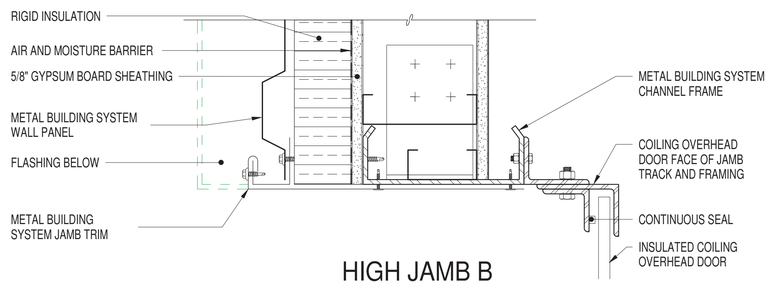

HIGH JAMB B

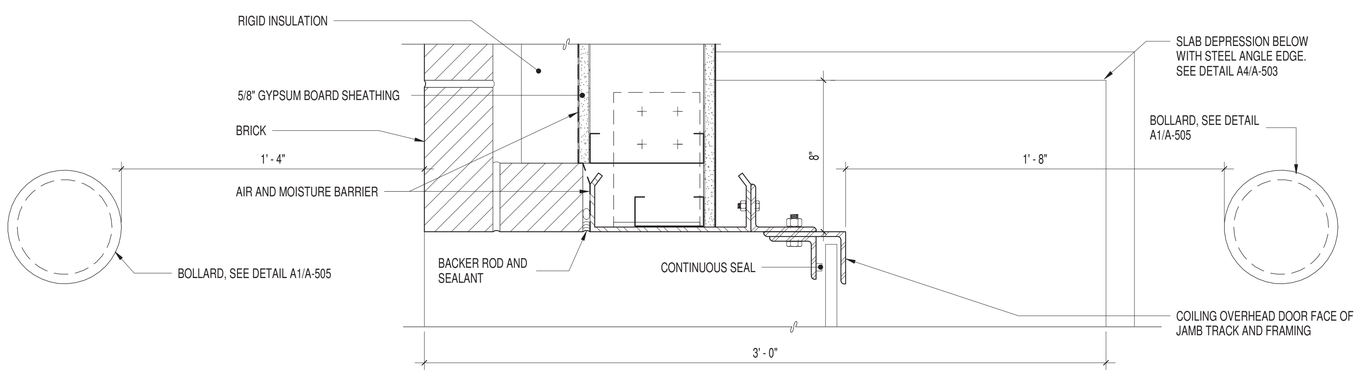

LOW JAMB C

A2 TYPICAL OVERHEAD DOOR DETAIL

SCALE: 3" = 1'-0"

GRAPHIC SCALE: 3"=1'-0"
0 3" 6" 1'

MBF ARCHITECTS, P.A. REGISTERED ARCHITECTURAL CORPORATION CERT. NO. 50679 NORTH CAROLINA NEW BERN N.C.

SYM	DESCRIPTION	DATE	APPR

NAVFAC

DARDEN J. EURE, III REGISTERED ARCHITECT 8640 NORTH CAROLINA NEW BERN NC
08 MAY 2026 SEAL

mbf architects pa
317-C Pollock Street | New Bern, NC 28560
252.637.6373 | mbfarchitects.com
A/E INFO

APPROVED
FOR COMMANDER NAVFAC 5/13/2026
ACTIVITY
SATISFACTORY TO

DES	REL	DRW	ESS	CHK	DJE,III
PM/DM					SGL/MDM
BRANCH MANAGER					DJD
CHIEF ENG/ARCH					JWJ
FIRE PROTECTION					HPN

DEPARTMENT OF THE NAVY
NAVAL FACILITIES ENGINEERING SYSTEMS COMMAND
MIDLANT DC CORE
MARINE CORPS BASE
NAVAL FACILITIES ENGINEERING SYSTEMS COMMAND ~ MIDATLANTIC
NAVAL STATION - NORFOLK, VA
CAMP LEJEUNE, NC
P-1550 SOF MARINE RAIDER BATTALION / COMPANY / TEAM FACILITIES
DOOR AND FRAME DETAILS

SCALE: AS INDICATED
EPROJECT NO.: 1701820
CONSTR. CONTR. NO.
NAVFAC DRAWING NO. 12903783
SHEET 41 OF 122
A3
CO STG
A-603
FINAL SUBMITTAL
DRAWFORM REVISION: 25 AUGUST 2020

S:\projects\2021\2122 MIDLANT CL P-1550 SOF Marine Battalion CompanyTeam Facilities\2122 Design\2122 Dwgs\2122 ARCH 2023_A3.rvt
File
Print
5/9/2026 1:03:44 PM

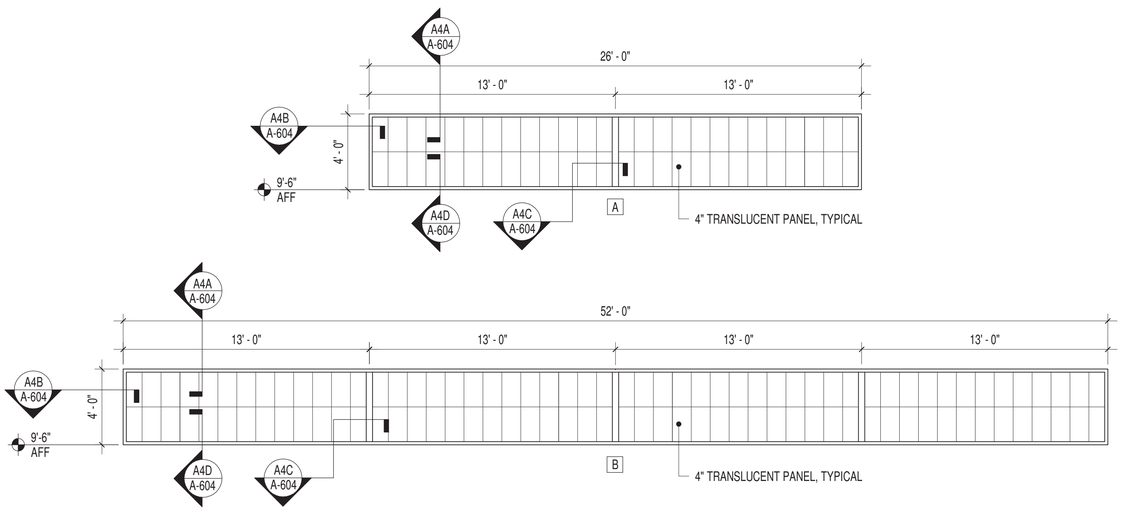

B2 WINDOW SCHEDULE

SCALE: 1/4" = 1'-0"

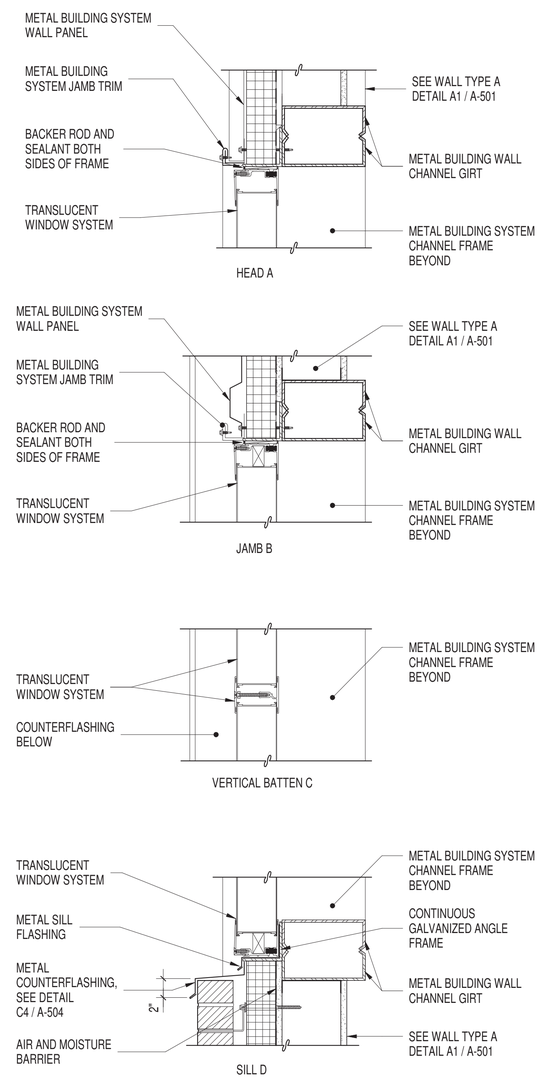

A3 TRANSLUCENT WINDOW DETAILS

SCALE: 1 1/2" = 1'-0"

Description	Color
Facade	
Building body Screen walls	red flashed wire cut standard gray mortar
Base foundation	gray split face standard gray mortar
Metal Panel	sandstone BM: OC-48 PANTONE: 400 FED STD: 17875
Painted Surfaces and Factory Finishes	
Exterior stairs Utilities/equipment Appurtenances	slate gray BM: 2133-40 PANTONE: 444 FED STD: 36173
Gutters/downspouts Fascia/soffit/frieze	slate gray BM: 2133-40 PANTONE: 444 FED STD: 36173
Handrails	slate gray BM: 2133-40 PANTONE: 444 FED STD: 36173
Entry accents Doors Window/door trim	slate gray BM: 2133-40 PANTONE: 444 FED STD: 36173
Roof Cladding	
Metal roof	slate gray BM: 2133-40 PANTONE: 444 FED STD: 36173

NOTES:

1. REFERENCE MCB CAMP LEJEUNE, BASE EXTERIOR ARCHITECTURAL PLAN (BEAP) 2010, SECTION 4.12.3 MARSOC

   HTTP://WWW.LEJEUNE.MARINES.MIL/PORTALS/27/DOCUMENTS/IDD/BEAP/BEAP_CONTENTS.HTML#_TOC276453692

2. FINAL COLOR SELECTIONS MUST BE APPROVED AT THE CONTRACTING OFFICER

A5 EXTERIOR FINISHES SCHEDULE

SCALE: NOT TO SCALE

GRAPHIC SCALE: 1/4"=1'-0"

4' 0 2' 4' 8'

GRAPHIC SCALE: 1 1/2"=1'-0"

1' 6" 3" 0 1'

MBF ARCHITECTS, P.A. REGISTERED ARCHITECTURAL CORPORATION CERT. NO. 50679 NORTH CAROLINA NEW BERN N.C.

SYM	DESCRIPTION	DATE	APPR

NAVFAC

DARDEN J. EURE, III REGISTERED ARCHITECT 8040 NORTH CAROLINA NEW BERN NC

08 MAY 2026 SEAL

mbf architects pa
317-C Pollock Street | New Bern, NC 28560
252.637.6373 | mbfarchitects.com
A/E INFO

APPROVED
James E. Donohue, P.E.
FOR COMMANDER NAVFAC 5/13/2026
ACTIVITY

SATISFACTORY TO
DES REL DRW ESS CHK DJE,III
PM/DM SGL/MDM
BRANCH MANAGER DJD
CHIEF ENG/ARCH JWJ
FIRE PROTECTION HPN

DEPARTMENT OF THE NAVY
NAVAL FACILITIES ENGINEERING SYSTEMS COMMAND
MIDLANT DC CORE
MARINE CORPS BASE
NAVAL FACILITIES ENGINEERING SYSTEMS COMMAND ~ MIDATLANTIC
NAVAL STATION - NORFOLK, VA
CAMP LEJEUNE, NC
P-1550 SOF MARINE RAIDER BATTALION / COMPANY / TEAM FACILITIES
WINDOW SCHEDULE AND DETAILS

SCALE: AS INDICATED
EPROJECT NO.: 1701820
CONSTR. CONTR. NO.

NAVFAC DRAWING NO. 12903784
SHEET 42 OF 122

A3
CO STG
A-604

FINAL SUBMITTAL
DRAWFORM REVISION: 25 AUGUST 2020

S:\projects\2021\2122 MIDLANT CL P-1550 SOF Marine Battalion Company Team Facilities\2122 Design\2122 Dwgs\2122 ARCH 2023_A3.rvt
5/9/2026 1:03:44 PM
File
Print

FURNITURE SCHEDULE

NO.	ITEM	QTY
A2	WALL CLOCK	3
A19	SMALL ENTRY MAT	9
E12	JANITOR CART WASTE	1
E27	AUTOMATED EXTERNAL DEFIBRILLATOR	1
S3	STORAGE CABINET - 42"W	1

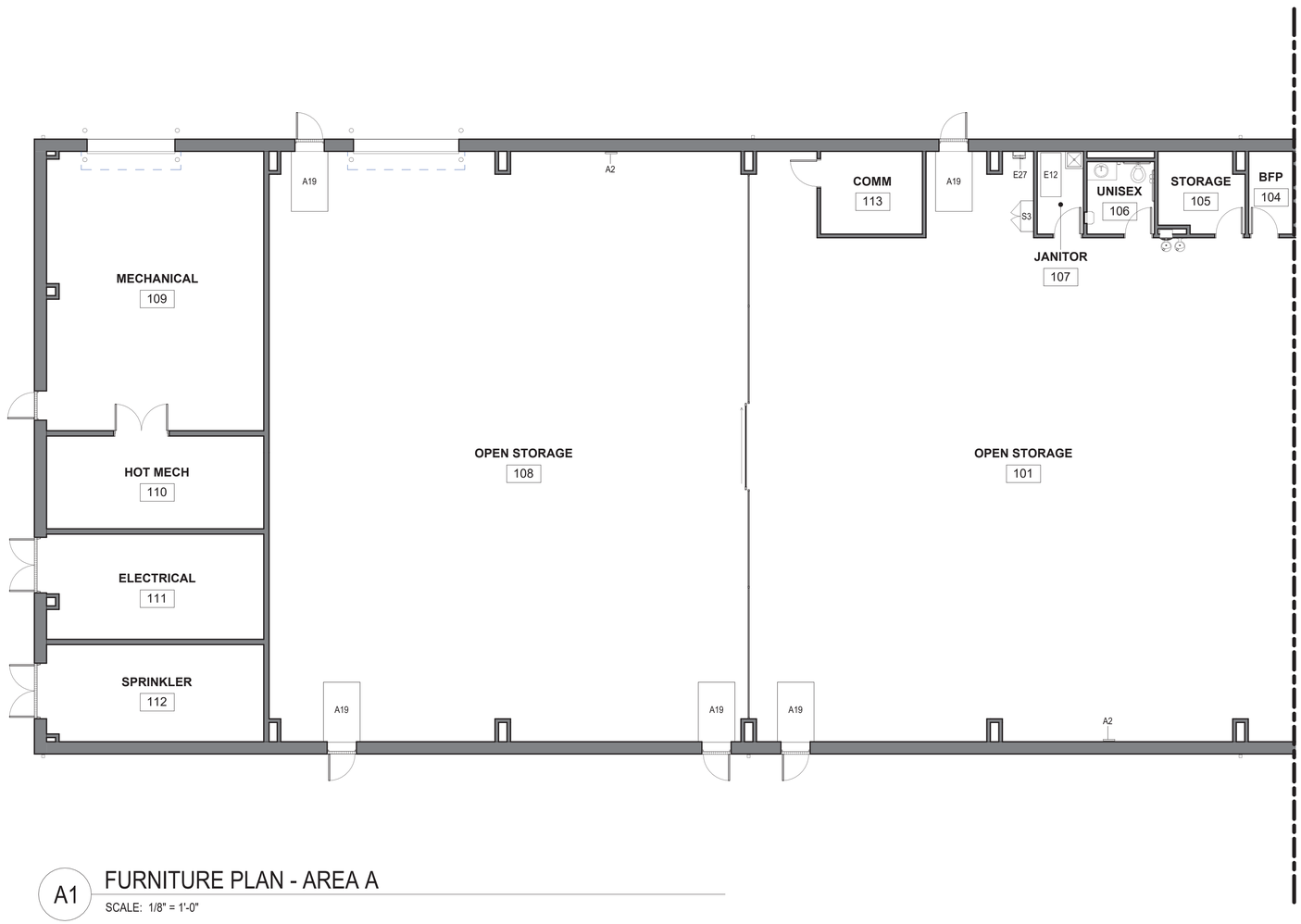

A1 FURNITURE PLAN - AREA A

SCALE: 1/8" = 1'-0"

FURNITURE NOTES

A. QUANTITIES ON FURNITURE SCHEDULE ARE TOTALS FOR ENTIRE PROJECT AND NOT INDICATIVE OF EACH SHEET.

B. REFER TO ARCHITECTURAL FLOOR PLANS FOR BUILDING LAYOUT, DIMENSIONS, AND COORDINATION TO BUILDING SYSTEMS AND STRUCTURE.

C. REFER TO ELECTRICAL DRAWINGS FOR COORDINATION OF LIGHTING, POWER, DATA, COMMUNICATIONS, AND LOCATIONS OF OTHER WALL AND FLOOR MOUNTED ELECTRICAL DEVICES AND EQUIPMENT FOR COORDINATION TO FURNITURE LAYOUTS. CONTRACTOR MUST IDENTIFY ANY CONFLICTS WITH FURNITURE LAYOUTS.

D. CONTRACTOR IS RESPONSIBLE FOR ENSURING TO PROVIDE POWER, DATA AND/OR A/V OUTLETS FOR ALL ITEMS OF FURNISHINGS AND EQUIPMENT INCLUDING FF&E, GOVERNMENT FURNISHED, CONTRACTOR INSTALLED (GFCI), AND GOVERNMENT FURNISHED, GOVERNMENT INSTALLED (GFGI), REQUIRING CABLING AND CONNECTIONS.

E. FF&E CONTRACTOR TO FIELD VERIFY ALL MEASUREMENTS AND SITE CONDITIONS TO ENSURE PROPER FIT OF ALL FF&E. FURNISHINGS MUST NOT OVERLAP OR OBSTRUCT DOOR FRAMES, WALL SWITCHES, THERMOSTATS, OR OTHER WALL MOUNTED ITEMS.

F. MODIFICATIONS TO FURNISHINGS LAYOUTS REQUIRED TO MEET BUILDING CONDITIONS AT THE TIME OF INSTALLATION MUST BE THE RESPONSIBILITY OF THE FF&E CONTRACTOR. ALL MODIFICATIONS MUST BE APPROVED IN WRITING BY A GOVERNMENT APPROVED REPRESENTATIVE PRIOR TO INSTALLATION OF THE FURNISHINGS.

G. INSTALL WALL CLOCKS AT 8'-0" AFF TO CENTER OF CLOCK UNLESS NOTED OTHERWISE.

H. FF&E ITEMS ARE NOT INCLUDED ON THE CONSTRUCTION CONTRACT AND MAY BE FUNDED SEPARATELY THROUGH A CONTRACT MODIFICATION.

KEY PLAN

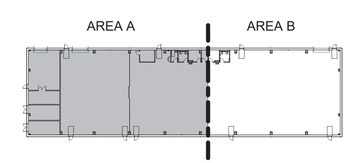

GRAPHIC SCALE:

1/8" = 1'-0" 0' 4' 8' 16'

SYM	DESCRIPTION	DATE	APPR.

NAVFAC

COMMONWEALTH OF VIRGINIA
JAMIE D. KISSEL
Cert. No. 001152
08 MAY 2026
CERTIFIED INTERIOR DESIGNER
SEAL

within
INTERIOR DESIGN
1008 GRANBY STREET
NORFOLK, VA 23510
757.224.0489
A/E INFO

APPROVED
FOR COMMANDER NAVFAC 5/15/2026
ACTIVITY
SATISFACTORY TO

DES JDK	DRW APG	CHK JDK

PM/DM SGL/MDM
BRANCH MANAGER DJD
CHIEF ENG/ARCH JWJ
FIRE PROTECTION HPN

DEPARTMENT OF THE NAVY
NAVAL FACILITIES ENGINEERING SYSTEMS COMMAND
MIDLANT DC CORE
MARINE CORPS BASE
NAVAL FACILITIES ENGINEERING SYSTEMS COMMAND ~ MIDATLANTIC
NAVAL STATION - NORFOLK, VA
CAMP LEJEUNE, NC
P-1550 SOF MARINE RAIDER
BATTALION / COMPANY / TEAM FACILITIES
FURNITURE PLAN - AREA A

SCALE: As indicated
EPROJECT NO.:
STA. PROJ. NO.
NAVFAC DRAWING NO. 12903784
SHEET 43 OF 122
A3
CO STG
I-101

FINAL DESIGN SUBMITTAL
DRAWFORM REVISION: 25 AUGUST 2020

File Path: W:\2206 P1550 SOF Marine Battalion Facilities\Revit\BLDG - A3\2122 WID A3_R23.rvt
Print Date: 5/8/2026 4:55:45 PM

FURNITURE SCHEDULE

NO.	ITEM	QTY
A2	WALL CLOCK	3
A19	SMALL ENTRY MAT	9
E12	JANITOR CART WASTE	1
E27	AUTOMATED EXTERNAL DEFIBRILLATOR	1
S3	STORAGE CABINET - 42"W	1

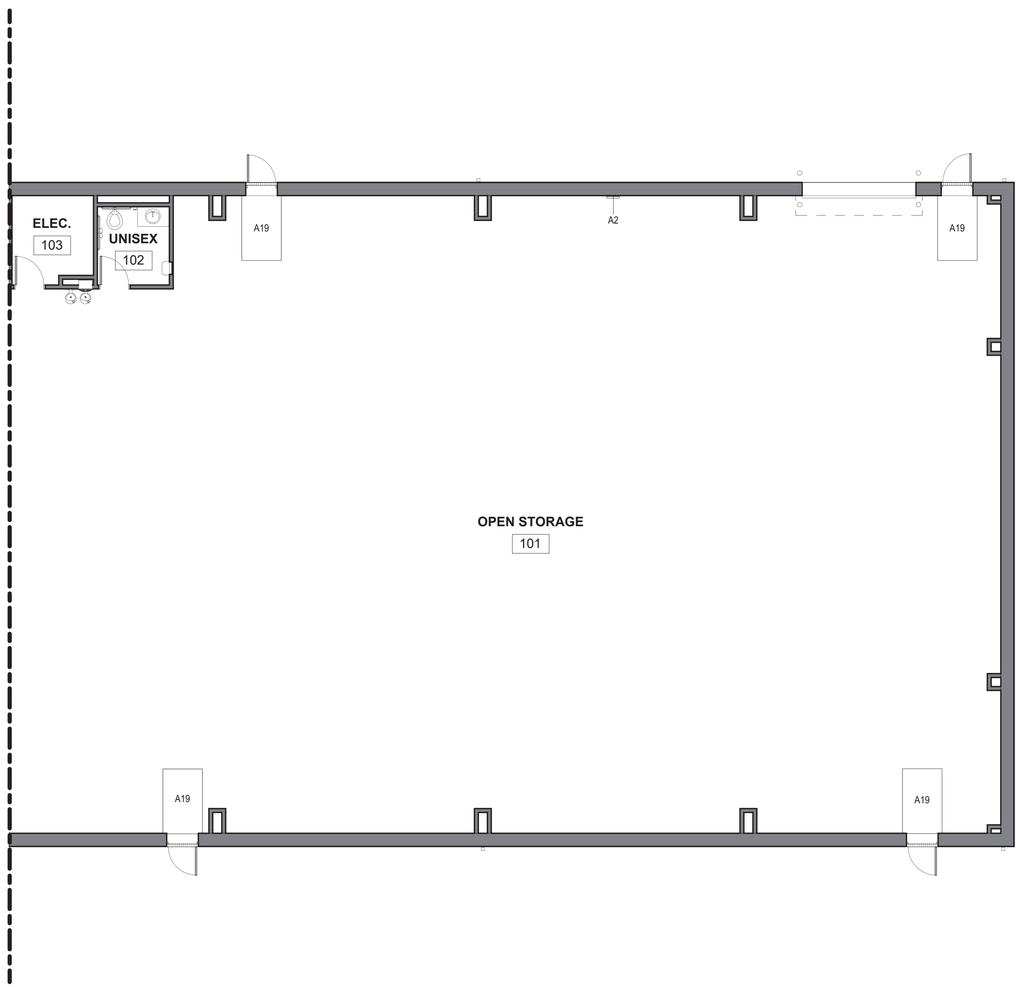

A1 FURNITURE PLAN - AREA B

SCALE: 1/8" = 1'-0"

FURNITURE NOTES

A. QUANTITIES ON FURNITURE SCHEDULE ARE TOTALS FOR ENTIRE PROJECT AND NOT INDICATIVE OF EACH SHEET.

B. REFER TO ARCHITECTURAL FLOOR PLANS FOR BUILDING LAYOUT, DIMENSIONS, AND COORDINATION TO BUILDING SYSTEMS AND STRUCTURE.

C. REFER TO ELECTRICAL DRAWINGS FOR COORDINATION OF LIGHTING, POWER, DATA, COMMUNICATIONS, AND LOCATIONS OF OTHER WALL AND FLOOR MOUNTED ELECTRICAL DEVICES AND EQUIPMENT FOR COORDINATION TO FURNITURE LAYOUTS. CONTRACTOR MUST IDENTIFY ANY CONFLICTS WITH FURNITURE LAYOUTS.

D. CONTRACTOR IS RESPONSIBLE FOR ENSURING TO PROVIDE POWER, DATA AND/OR A/V OUTLETS FOR ALL ITEMS OF FURNISHINGS AND EQUIPMENT INCLUDING FF&E, GOVERNMENT FURNISHED, CONTRACTOR INSTALLED (GFCI), AND GOVERNMENT FURNISHED, GOVERNMENT INSTALLED (GFGI), REQUIRING CABLING AND CONNECTIONS.

E. FF&E CONTRACTOR TO FIELD VERIFY ALL MEASUREMENTS AND SITE CONDITIONS TO ENSURE PROPER FIT OF ALL FF&E. FURNISHINGS MUST NOT OVERLAP OR OBSTRUCT DOOR FRAMES, WALL SWITCHES, THERMOSTATS, OR OTHER WALL MOUNTED ITEMS.

F. MODIFICATIONS TO FURNISHINGS LAYOUTS REQUIRED TO MEET BUILDING CONDITIONS AT THE TIME OF INSTALLATION MUST BE THE RESPONSIBILITY OF THE FF&E CONTRACTOR. ALL MODIFICATIONS MUST BE APPROVED IN WRITING BY A GOVERNMENT APPROVED REPRESENTATIVE PRIOR TO INSTALLATION OF THE FURNISHINGS.

G. INSTALL WALL CLOCKS AT 8'-0" AFF TO CENTER OF CLOCK UNLESS NOTED OTHERWISE.

H. FF&E ITEMS ARE NOT INCLUDED ON THE CONSTRUCTION CONTRACT AND MAY BE FUNDED SEPARATELY THROUGH A CONTRACT MODIFICATION.

KEY PLAN

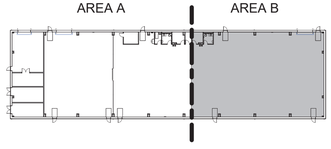

GRAPHIC SCALE:

1/8" = 1'-0" 0' 4' 8' 16'

SYM	DESCRIPTION	DATE	APPR.

NAVFAC

COMMONWEALTH OF VIRGINIA
JAMIE D. KISSEL
Cert. No. 001152
08 MAY 2026
CERTIFIED INTERIOR DESIGNER
SEAL

within
INTERIOR DESIGN
1008 GRANBY STREET
NORFOLK, VA 23510
757.224.0489
A/E INFO

APPROVED
James E. Crowder, P.E.
FOR COMMANDER NAVFAC 5/13/2026
ACTIVITY
SATISFACTORY TO

DES	JDK	DRW	APG	CHK	JDK
PM/DM					SGL/MDM
BRANCH MANAGER					DJD
CHIEF ENG/ARCH					JWJ
FIRE PROTECTION					HPN

DEPARTMENT OF THE NAVY
NAVAL FACILITIES ENGINEERING SYSTEMS COMMAND
NAVAL FACILITIES ENGINEERING SYSTEMS COMMAND ~ MIDATLANTIC
NAVAL STATION - NORFOLK, VA
MIDLANT DC CORE
MARINE CORPS BASE
CAMP LEJEUNE, NC
P-1550 SOF MARINE RAIDER
BATTALION / COMPANY / TEAM FACILITIES
FURNITURE PLAN - AREA B

SCALE: As indicated
EPROJECT NO.:
STA. PROJ. NO.
NAVFAC DRAWING NO. 12903785
SHEET 44 OF 122
A3
CO STG
I-102

FINAL DESIGN SUBMITTAL
DRAWFORM REVISION: 25 AUGUST 2020

File Path: W:\2206 P1550 SOF Marine Battalion Facilities\Revit\BLDG - A3\2122 WID A3_R23.rvt
Print Date: 5/8/2026 4:55:45 PM

FLOOR FINISH LEGEND

RES-1

SC-1

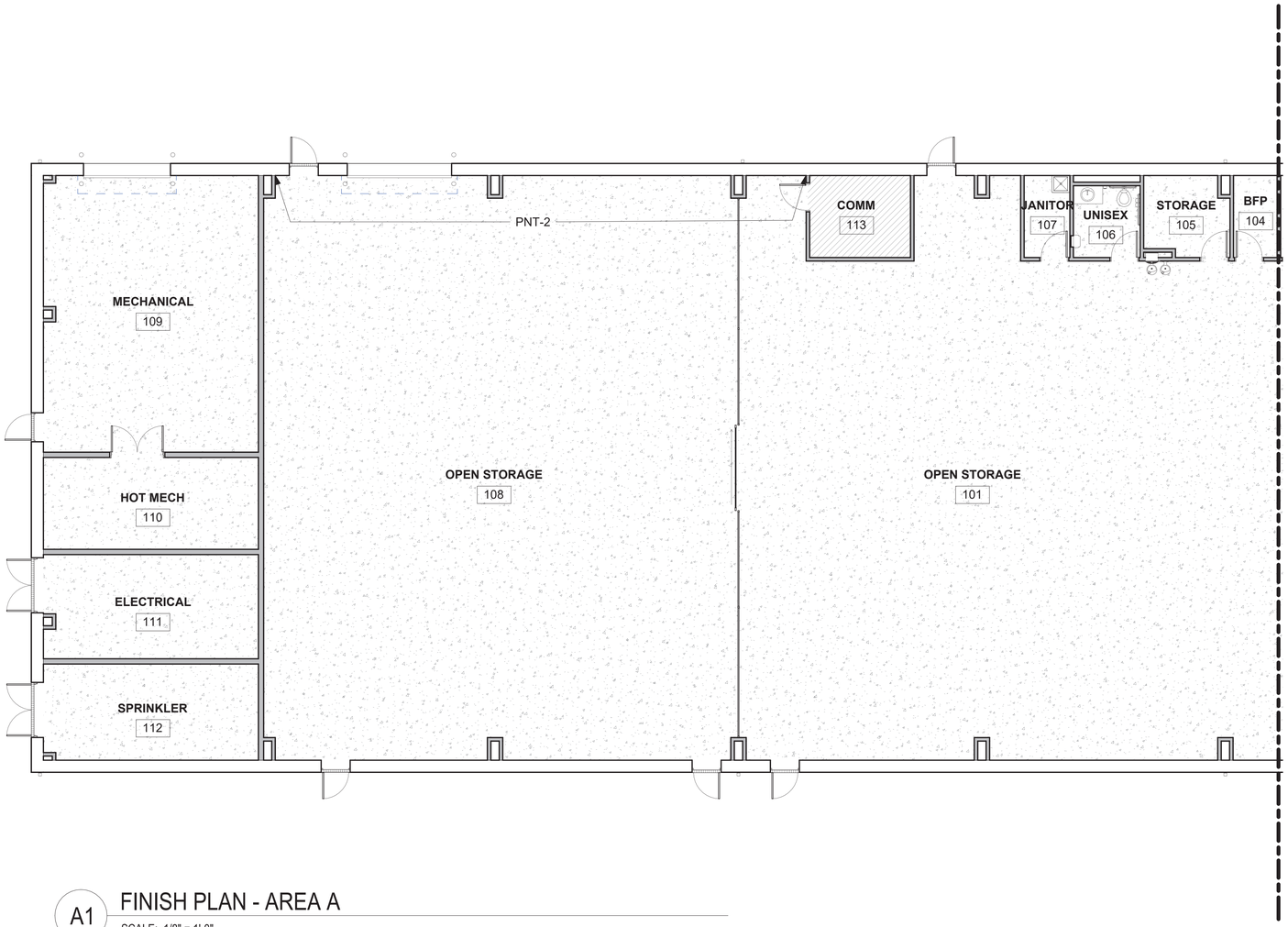

A1 FINISH PLAN - AREA A

SCALE: 1/8" = 1'-0"

GENERAL FINISH NOTES

A. FINISHES INDICATED ARE THE APPROVED BASIS OF DESIGN TO CONVEY COLOR, PATTERN, TEXTURE AND SALIENT CHARACTERISTICS ONLY. THE LISTING OF MANUFACTURER INFORMATION IS NOT INTENDED TO LIMIT THE SELECTION OF PRODUCTS PROVIDED BY OTHER MANUFACTURERS. PRODUCTS MEETING THESE CRITERIA WILL BE CONSIDERED AND MUST BE REVIEWED BY THE INTERIOR DESIGNER OF RECORD (IDOR) AND THE NAVFAC INTERIOR DESIGNER AND APPROVED BY THE CONTRACTING OFFICER.

B. FINISH ITEMS ARE NOT TO BE SUBSTITUTED DUE TO ORDERING LEAD TIMES. IT IS THE CONTRACTOR'S RESPONSIBILITY TO ORDER ALL MATERIALS IN TIME TO AVOID DELAYS.

C. COORDINATE THERMOSTAT LOCATIONS WITH MECHANICAL DRAWINGS AND CONSTRUCTION MANAGER. INSTALL THERMOSTATS NEAR A CORNER OF THE ROOM OR BY LIGHT SWITCHES.

D. SPRAY PAINT ELECTRICAL PANELS, ACCESS PANELS, AND EXPANSION JOINTS TO MATCH THE ADJACENT WALL COLOR. PANELS PAINTED BY BRUSH ARE NOT ACCEPTABLE

E. ALL FLOORING TRANSITIONS MUST MEET ABA GUIDELINES. FLOORING TRANSITIONS OCCURRING UNDER DOORS MUST BE CENTERED UNDER DOOR.

F. ALL WALL AND CEILING FINISHES IN VERTICAL EXIT WAYS, EXIT LOBBIES, AND EXIT CORRIDORS MUST MEET MINIMUM CLASS A RATING.

G. ROOMS IDENTIFIED TO RECEIVE TILE ON WALLS MUST INCLUDE METAL TRANSITIONS ON ALL OUTSIDE AND INSIDE CORNERS.

H. INSTALL CORNER GUARDS (CG-1) ON ALL OUTSIDE CORNERS. INSTALL END CAPS ON ALL OPEN EDED WALLS. CORNER GUARDS AND END CAPS MUST BE FULL HEIGHT AND SHOULD NOT BE USED ON CMU WALLS, TILED WALLS, OR MANUFACTURED STONE WALLS.

I. ALL AREAS TO RECEIVE RESILIENT BASE (RB-1) WITH THE EXCEPTION OF AREAS RECEIVING WALL TILE.

J. ALL WALLS TO BE PAINTED (PNT-1) UNLESS OTHERWISE INDICATED. ALL HOLLOW METAL DOORS AND DOOR FRAMES TO BE PAINTED (PNT-6). ALL GWB CEILINGS TO BE PAINTED (PNT-7).

K. ALL BASE CABINETS, WALL CABINETS, APRONS AND SHROUDS WILL BE PLASTIC LAMINATE (PLAM-1).

L. ALL COUNTERTOP AND BACK/SIDE SPLASHES TO BE SOLID SURFACE (SS-1). BACK/SIDE SPLASHES ARE ONLY TO BE APPLIED AT WALLS WITHOUT TILE.

M. FLOOR TILE (T-1 & T-4) & TO RECEIVE GROUT FINISH (GR-1). WALL TILE (T-2 & T-3) TO RECEIVE GROUT FINISH (GR-2).

FLOOR FINISH NOTES

A. HATCH PATTERN DOES NOT INDICATE DIRECTION OR METHOD OF FLOORING INSTALLATION.

B. REFER TO SHEET I-601 FOR FINISH LEGEND.

KEY PLAN

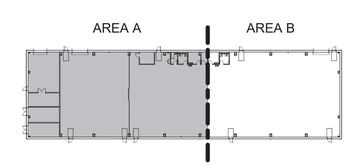

GRAPHIC SCALE:

1/8" = 1'-0" 0' 4' 8' 16'

SYM	DESCRIPTION	DATE	APPR.

NAVFAC

COMMONWEALTH OF VIRGINIA
JAMIE D. KISSEL
Cert. No. 001152
08 MAY 2026
CERTIFIED INTERIOR DESIGNER
SEAL

within
INTERIOR DESIGN
1008 GRANBY STREET
NORFOLK, VA 23510
757.224.0489
A/E INFO

APPROVED
FOR COMMANDER NAVFAC 5/15/2026
ACTIVITY

SATISFACTORY TO

DES JDK	DRW APG	CHK JDK

PM/DM SGL/MDM
BRANCH MANAGER DJD
CHIEF ENG/ARCH JWJ
FIRE PROTECTION HPN

DEPARTMENT OF THE NAVY
NAVAL FACILITIES ENGINEERING SYSTEMS COMMAND
MIDLANT DC CORE
MARINE CORPS BASE
NAVAL FACILITIES ENGINEERING SYSTEMS COMMAND ~ MIDATLANTIC
NAVAL STATION - NORFOLK, VA
CAMP LEJEUNE, NC
P-1550 SOF MARINE RAIDER
BATTALION / COMPANY / TEAM FACILITIES
FINISH PLAN - AREA A

SCALE: As indicated
EPROJECT NO.:
STA. PROJ. NO.
NAVFAC DRAWING NO. 12903786
SHEET 45 OF 122

A3
CO STG

I-111

FINAL DESIGN SUBMITTAL
DRAWFORM REVISION: 25 AUGUST 2020

File Path: W:\2206 P1550 SOF Marine Battalion Facilities\Revit\BLDG - A3\2122 WID A3_R23.rvt
Print Date: 5/8/2026 4:55:46 PM

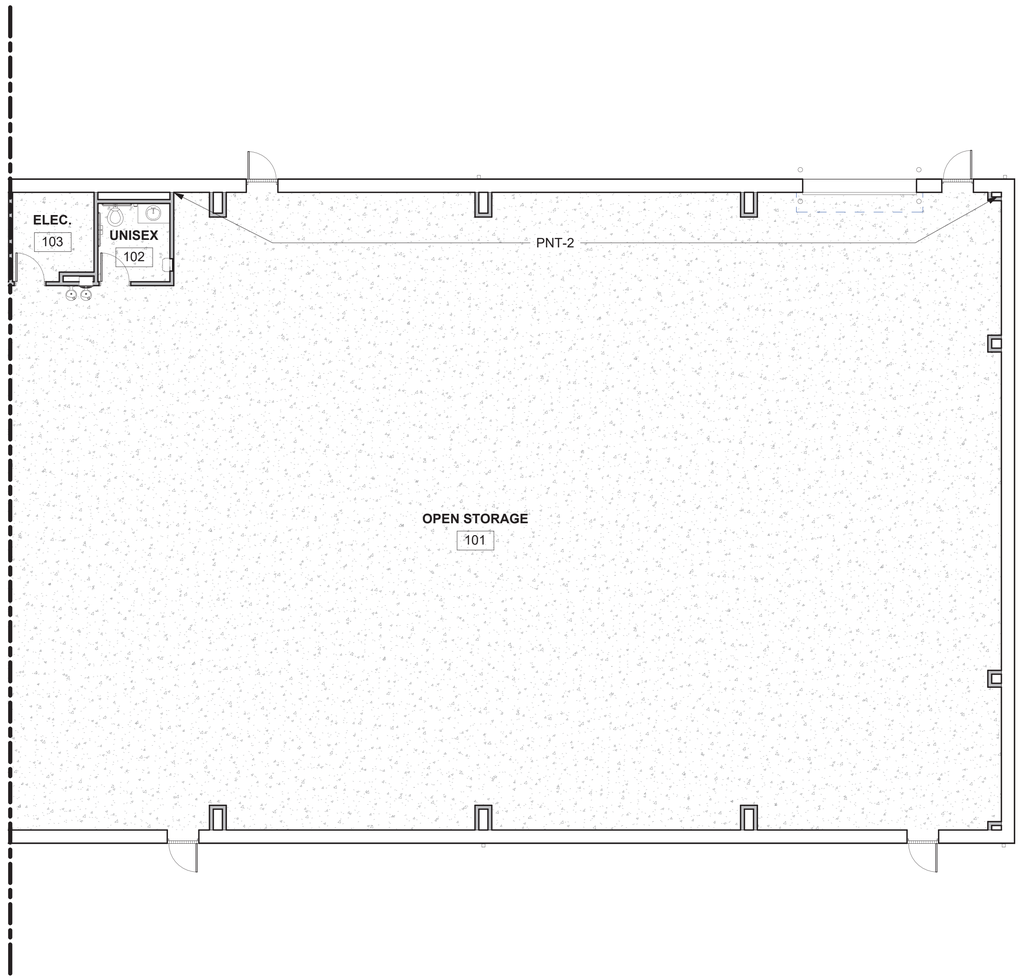

A1 FINISH PLAN - AREA B

SCALE: 1/8" = 1'-0"

FLOOR FINISH LEGEND

SC-1

GENERAL FINISH NOTES

A. FINISHES INDICATED ARE THE APPROVED BASIS OF DESIGN TO CONVEY COLOR, PATTERN, TEXTURE AND SALIENT CHARACTERISTICS ONLY. THE LISTING OF MANUFACTURER INFORMATION IS NOT INTENDED TO LIMIT THE SELECTION OF PRODUCTS PROVIDED BY OTHER MANUFACTURERS. PRODUCTS MEETING THESE CRITERIA WILL BE CONSIDERED AND MUST BE REVIEWED BY THE INTERIOR DESIGNER OF RECORD (IDOR) AND THE NAVFAC INTERIOR DESIGNER AND APPROVED BY THE CONTRACTING OFFICER.

B. FINISH ITEMS ARE NOT TO BE SUBSTITUTED DUE TO ORDERING LEAD TIMES. IT IS THE CONTRACTOR'S RESPONSIBILITY TO ORDER ALL MATERIALS IN TIME TO AVOID DELAYS.

C. COORDINATE THERMOSTAT LOCATIONS WITH MECHANICAL DRAWINGS AND CONSTRUCTION MANAGER. INSTALL THERMOSTATS NEAR A CORNER OF THE ROOM OR BY LIGHT SWITCHES.

D. SPRAY PAINT ELECTRICAL PANELS, ACCESS PANELS, AND EXPANSION JOINTS TO MATCH THE ADJACENT WALL COLOR. PANELS PAINTED BY BRUSH ARE NOT ACCEPTABLE

E. ALL FLOORING TRANSITIONS MUST MEET ABA GUIDELINES. FLOORING TRANSITIONS OCCURRING UNDER DOORS MUST BE CENTERED UNDER DOOR.

F. ALL WALL AND CEILING FINISHES IN VERTICAL EXIT WAYS, EXIT LOBBIES, AND EXIT CORRIDORS MUST MEET MINIMUM CLASS A RATING.

G. ROOMS IDENTIFIED TO RECEIVE TILE ON WALLS MUST INCLUDE METAL TRANSITIONS ON ALL OUTSIDE AND INSIDE CORNERS.

H. INSTALL CORNER GUARDS (CG-1) ON ALL OUTSIDE CORNERS. INSTALL END CAPS ON ALL OPEN EDED WALLS. CORNER GUARDS AND END CAPS MUST BE FULL HEIGHT AND SHOULD NOT BE USED ON CMU WALLS, TILED WALLS, OR MANUFACTURED STONE WALLS.

I. ALL AREAS TO RECEIVE RESILIENT BASE (RB-1) WITH THE EXCEPTION OF AREAS RECEIVING WALL TILE.

J. ALL WALLS TO BE PAINTED (PNT-1) UNLESS OTHERWISE INDICATED. ALL HOLLOW METAL DOORS AND DOOR FRAMES TO BE PAINTED (PNT-6). ALL GWB CEILINGS TO BE PAINTED (PNT-7).

K. ALL BASE CABINETS, WALL CABINETS, APRONS AND SHROUDS WILL BE PLASTIC LAMINATE (PLAM-1).

L. ALL COUNTERTOP AND BACK/SIDE SPLASHES TO BE SOLID SURFACE (SS-1). BACK/SIDE SPLASHES ARE ONLY TO BE APPLIED AT WALLS WITHOUT TILE.

M. FLOOR TILE (T-1 & T-4) & TO RECEIVE GROUT FINISH (GR-1). WALL TILE (T-2 & T-3) TO RECEIVE GROUT FINISH (GR-2).

FLOOR FINISH NOTES

A. HATCH PATTERN DOES NOT INDICATE DIRECTION OR METHOD OF FLOORING INSTALLATION.

B. REFER TO SHEET I-601 FOR FINISH LEGEND.

KEY PLAN

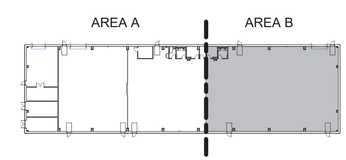

GRAPHIC SCALE:

1/8" = 1'-0" 0' 4' 8' 16'

SYM	DESCRIPTION	DATE	APPR.

NAVFAC

COMMONWEALTH OF VIRGINIA
JAMIE D. KISSEL
Cert. No. 001152
08 MAY 2026
CERTIFIED INTERIOR DESIGNER
SEAL

within
INTERIOR DESIGN
1008 GRANBY STREET
NORFOLK, VA 23510
757.224.0489
A/E INFO

APPROVED
FOR COMMANDER NAVFAC 5/13/2026
ACTIVITY

SATISFACTORY TO

DES JDK	DRW APG	CHK JDK

PM/DM SGL/MDM
BRANCH MANAGER DJD
CHIEF ENG/ARCH JWJ
FIRE PROTECTION HPN

DEPARTMENT OF THE NAVY
NAVAL FACILITIES ENGINEERING SYSTEMS COMMAND
MIDLANTIC CONE
MARINE CORPS BASE
NAVAL FACILITIES ENGINEERING SYSTEMS COMMAND – MIDATLANTIC
NAVAL STATION - NORFOLK, VA
CAMP LEJEUNE, NC
P-1550 SOF MARINE RAIDER
BATTALION / COMPANY / TEAM FACILITIES
FINISH PLAN - AREA B

SCALE: As indicated
EPROJECT NO.:
STA. PROJ. NO.
NAVFAC DRAWING NO. 12903787
SHEET 46 OF 122
I-112

A3
CO STG

FINAL DESIGN SUBMITTAL
DRAWFORM REVISION: 25 AUGUST 2020

File Path: W:\2206 P1550 SOF Marine Battalion Facilities\Revit\BLDG - A3\2122 WID A3_R23.rvt
Print Date: 5/8/2026 4:55:46 PM

INTERIOR SIGNAGE

TYPE	DESCRIPTION	QTY
S1	ROOM IDENTIFICATION SIGN	1
S2	PERMANENT ROOM IDENTIFICATION SIGN	3
S6	UNISEX ADA RESTROOM IDENTIFICATION SIGN	2
S9	EXTERIOR ROOM IDENTIFICATION SIGN	12
S10	LIVE LOAD SIGN	1
S11	PALLET RACK SIGN	13

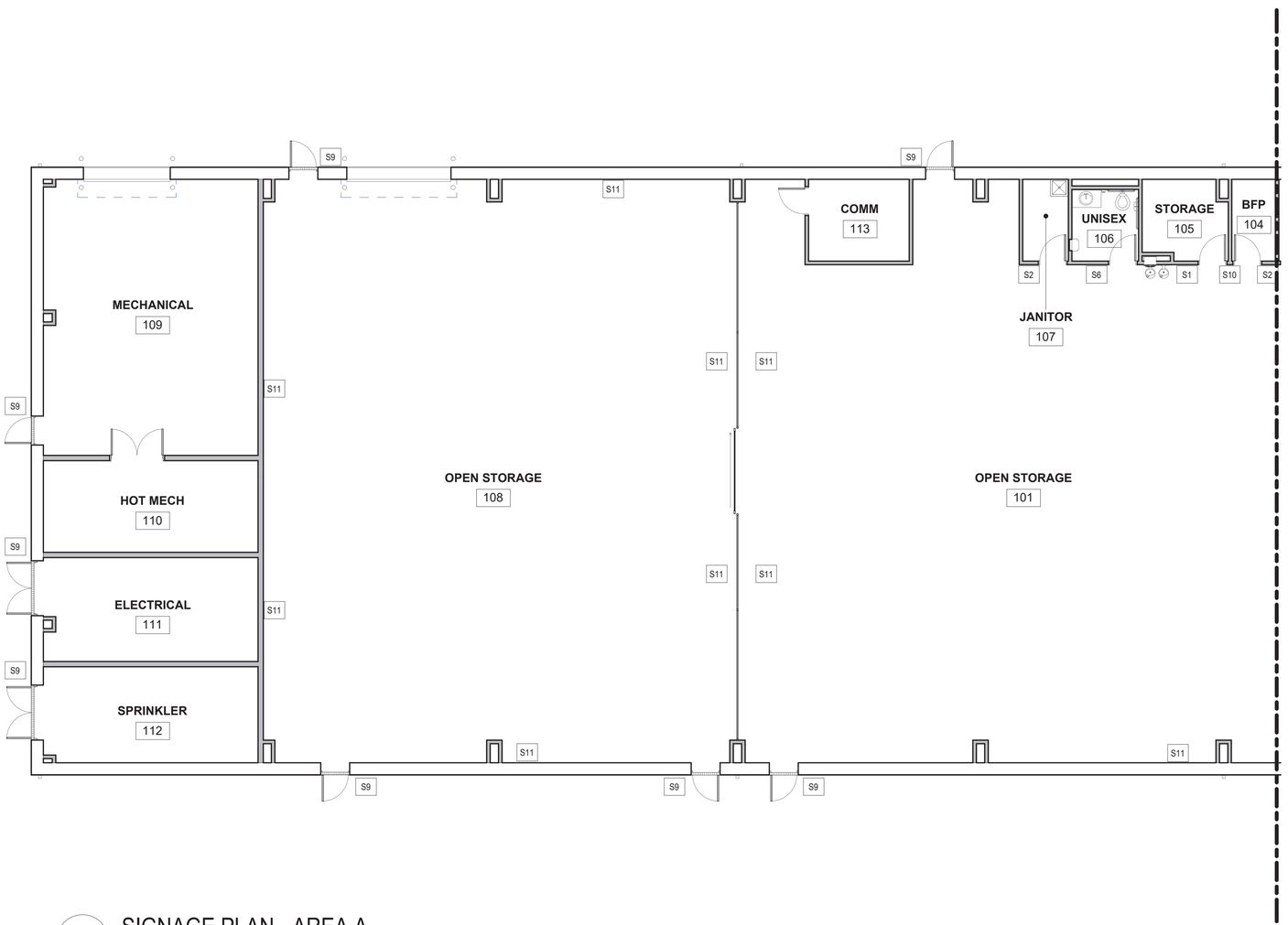

A1 SIGNAGE PLAN - AREA A

SCALE: 1/8" = 1'-0"

GENERAL FINISH NOTES

A. FINISHES INDICATED ARE THE APPROVED BASIS OF DESIGN TO CONVEY COLOR, PATTERN, TEXTURE AND SALIENT CHARACTERISTICS ONLY. THE LISTING OF MANUFACTURER INFORMATION IS NOT INTENDED TO LIMIT THE SELECTION OF PRODUCTS PROVIDED BY OTHER MANUFACTURERS. PRODUCTS MEETING THESE CRITERIA WILL BE CONSIDERED AND MUST BE REVIEWED BY THE INTERIOR DESIGNER OF RECORD (IDOR) AND THE NAVFAC INTERIOR DESIGNER AND APPROVED BY THE CONTRACTING OFFICER.

B. FINISH ITEMS ARE NOT TO BE SUBSTITUTED DUE TO ORDERING LEAD TIMES. IT IS THE CONTRACTOR'S RESPONSIBILITY TO ORDER ALL MATERIALS IN TIME TO AVOID DELAYS.

C. COORDINATE THERMOSTAT LOCATIONS WITH MECHANICAL DRAWINGS AND CONSTRUCTION MANAGER. INSTALL THERMOSTATS NEAR A CORNER OF THE ROOM OR BY LIGHT SWITCHES.

D. SPRAY PAINT ELECTRICAL PANELS, ACCESS PANELS, AND EXPANSION JOINTS TO MATCH THE ADJACENT WALL COLOR. PANELS PAINTED BY BRUSH ARE NOT ACCEPTABLE

E. ALL FLOORING TRANSITIONS MUST MEET ABA GUIDELINES. FLOORING TRANSITIONS OCCURRING UNDER DOORS MUST BE CENTERED UNDER DOOR.

F. ALL WALL AND CEILING FINISHES IN VERTICAL EXIT WAYS, EXIT LOBBIES, AND EXIT CORRIDORS MUST MEET MINIMUM CLASS A RATING.

G. ROOMS IDENTIFIED TO RECEIVE TILE ON WALLS MUST INCLUDE METAL TRANSITIONS ON ALL OUTSIDE AND INSIDE CORNERS.

H. INSTALL CORNER GUARDS (CG-1) ON ALL OUTSIDE CORNERS. INSTALL END CAPS ON ALL OPEN EDED WALLS. CORNER GUARDS AND END CAPS MUST BE FULL HEIGHT AND SHOULD NOT BE USED ON CMU WALLS, TILED WALLS, OR MANUFACTURED STONE WALLS.

I. ALL AREAS TO RECEIVE RESILIENT BASE (RB-1) WITH THE EXCEPTION OF AREAS RECEIVING WALL TILE.

J. ALL WALLS TO BE PAINTED (PNT-1) UNLESS OTHERWISE INDICATED. ALL HOLLOW METAL DOORS AND DOOR FRAMES TO BE PAINTED (PNT-6). ALL GWB CEILINGS TO BE PAINTED (PNT-7).

K. ALL BASE CABINETS, WALL CABINETS, APRONS AND SHROUDS WILL BE PLASTIC LAMINATE (PLAM-1).

L. ALL COUNTERTOP AND BACK/SIDE SPLASHES TO BE SOLID SURFACE (SS-1). BACK/SIDE SPLASHES ARE ONLY TO BE APPLIED AT WALLS WITHOUT TILE.

M. FLOOR TILE (T-1 & T-4) & TO RECEIVE GROUT FINISH (GR-1). WALL TILE (T-2 & T-3) TO RECEIVE GROUT FINISH (GR-2).

SIGNAGE NOTES

A. ALL SIGNAGE MUST BE IN COMPLIANCE WITH UFGS 10 14 00.20.

B. ALL SIGN TYPES, TEXT WORDING AND ROOM NUMBERS TO BE VERIFIED WITH END USER.

C. REFER TO SHEET I-501 FOR SIGNAGE DETAILS.

D. REFER TO SHEET I-601 FINISH LEGEND FOR SIGNAGE FINISHES.

KEY PLAN

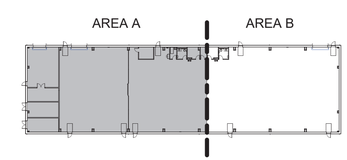

GRAPHIC SCALE:

1/8" = 1'-0" 0' 4' 8' 16'

SYM	DESCRIPTION	DATE	APPR.

NAVFAC

COMMONWEALTH OF VIRGINIA
JAMIE D. KISSEL
Cert. No. 001152
08 MAY 2026
CERTIFIED INTERIOR DESIGNER
SEAL

within
INTERIOR DESIGN
1008 GRANBY STREET
NORFOLK, VA 23510
757.224.0489
A/E INFO

APPROVED
FOR COMMANDER NAVFAC 5/13/2026
ACTIVITY

SATISFACTORY TO

DES JDK	DRW APG	CHK JDK	
PM/DM			SGL/MDM
BRANCH MANAGER			DJD
CHIEF ENG/ARCH			JWJ
FIRE PROTECTION			HPN

DEPARTMENT OF THE NAVY
NAVAL FACILITIES ENGINEERING SYSTEMS COMMAND
MIDLANT DC CORE
MARINE CORPS BASE

NAVAL FACILITIES ENGINEERING SYSTEMS COMMAND – MIDATLANTIC
NAVAL STATION - NORFOLK, VA
CAMP LEJEUNE, NC

P-1550 SOF MARINE RAIDER
BATTALION / COMPANY / TEAM FACILITIES

SIGNAGE PLAN - AREA A

SCALE: As indicated
EPROJECT NO.:
STA. PROJ. NO.
NAVFAC DRAWING NO. 12903788
SHEET 47 OF 122

A3
CO STG

I-121

FINAL DESIGN SUBMITTAL
DRAWFORM REVISION: 25 AUGUST 2020

File Path: W:\2206 P1550 SOF Marine Battalion Facilities\Revit\BLDG - A3\2122 WID A3_R23.rvt
Print Date: 5/8/2026 4:55:47 PM

INTERIOR SIGNAGE

TYPE	DESCRIPTION	QTY
S1	ROOM IDENTIFICATION SIGN	1
S2	PERMANENT ROOM IDENTIFICATION SIGN	3
S6	UNISEX ADA RESTROOM IDENTIFICATION SIGN	2
S9	EXTERIOR ROOM IDENTIFICATION SIGN	12
S10	LIVE LOAD SIGN	1
S11	PALLET RACK SIGN	13

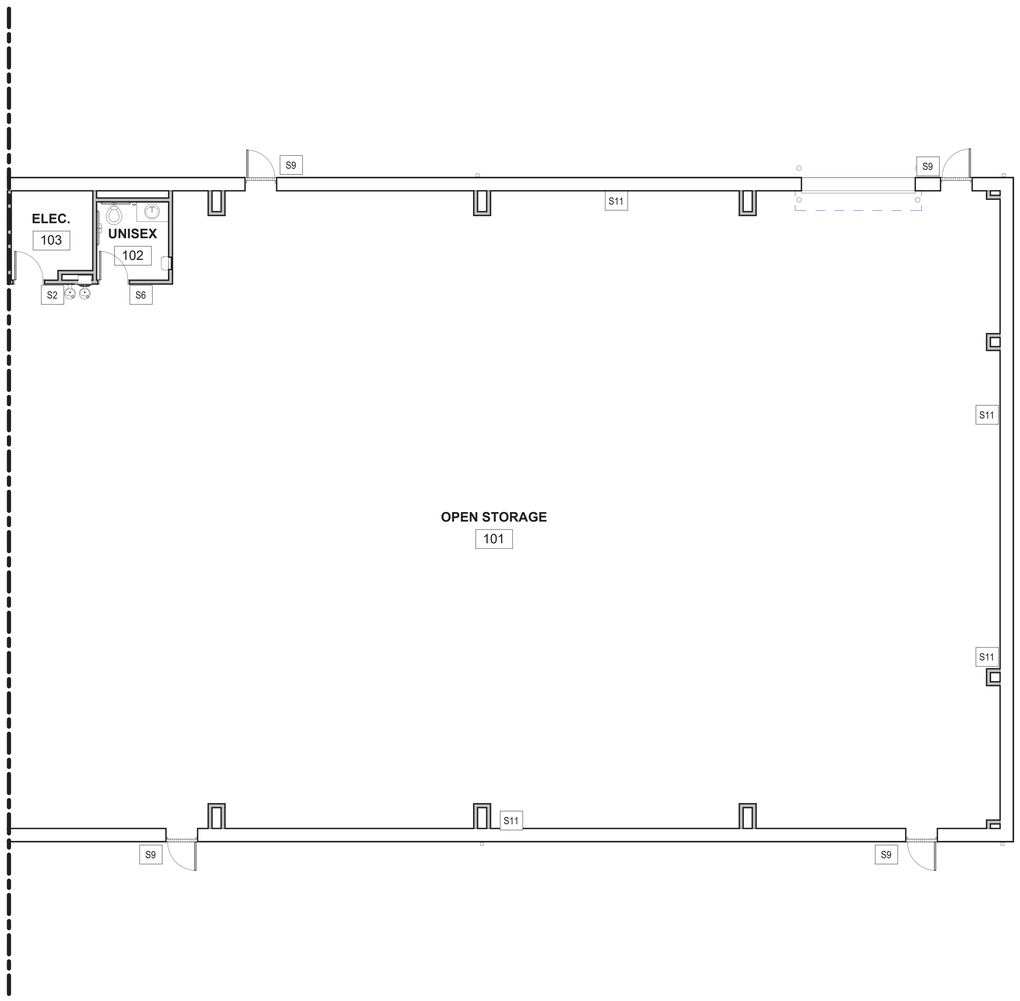

A1 SIGNAGE PLAN - AREA B

SCALE: 1/8" = 1'-0"

GENERAL FINISH NOTES

A. FINISHES INDICATED ARE THE APPROVED BASIS OF DESIGN TO CONVEY COLOR, PATTERN, TEXTURE AND SALIENT CHARACTERISTICS ONLY. THE LISTING OF MANUFACTURER INFORMATION IS NOT INTENDED TO LIMIT THE SELECTION OF PRODUCTS PROVIDED BY OTHER MANUFACTURERS. PRODUCTS MEETING THESE CRITERIA WILL BE CONSIDERED AND MUST BE REVIEWED BY THE INTERIOR DESIGNER OF RECORD (IDOR) AND THE NAVFAC INTERIOR DESIGNER AND APPROVED BY THE CONTRACTING OFFICER.

B. FINISH ITEMS ARE NOT TO BE SUBSTITUTED DUE TO ORDERING LEAD TIMES. IT IS THE CONTRACTOR'S RESPONSIBILITY TO ORDER ALL MATERIALS IN TIME TO AVOID DELAYS.

C. COORDINATE THERMOSTAT LOCATIONS WITH MECHANICAL DRAWINGS AND CONSTRUCTION MANAGER. INSTALL THERMOSTATS NEAR A CORNER OF THE ROOM OR BY LIGHT SWITCHES.

D. SPRAY PAINT ELECTRICAL PANELS, ACCESS PANELS, AND EXPANSION JOINTS TO MATCH THE ADJACENT WALL COLOR. PANELS PAINTED BY BRUSH ARE NOT ACCEPTABLE

E. ALL FLOORING TRANSITIONS MUST MEET ABA GUIDELINES. FLOORING TRANSITIONS OCCURRING UNDER DOORS MUST BE CENTERED UNDER DOOR.

F. ALL WALL AND CEILING FINISHES IN VERTICAL EXIT WAYS, EXIT LOBBIES, AND EXIT CORRIDORS MUST MEET MINIMUM CLASS A RATING.

G. ROOMS IDENTIFIED TO RECEIVE TILE ON WALLS MUST INCLUDE METAL TRANSITIONS ON ALL OUTSIDE AND INSIDE CORNERS.

H. INSTALL CORNER GUARDS (CG-1) ON ALL OUTSIDE CORNERS. INSTALL END CAPS ON ALL OPEN EDED WALLS. CORNER GUARDS AND END CAPS MUST BE FULL HEIGHT AND SHOULD NOT BE USED ON CMU WALLS, TILED WALLS, OR MANUFACTURED STONE WALLS.

I. ALL AREAS TO RECEIVE RESILIENT BASE (RB-1) WITH THE EXCEPTION OF AREAS RECEIVING WALL TILE.

J. ALL WALLS TO BE PAINTED (PNT-1) UNLESS OTHERWISE INDICATED. ALL HOLLOW METAL DOORS AND DOOR FRAMES TO BE PAINTED (PNT-6). ALL GWB CEILINGS TO BE PAINTED (PNT-7).

K. ALL BASE CABINETS, WALL CABINETS, APRONS AND SHROUDS WILL BE PLASTIC LAMINATE (PLAM-1).

L. ALL COUNTERTOP AND BACK/SIDE SPLASHES TO BE SOLID SURFACE (SS-1). BACK/SIDE SPLASHES ARE ONLY TO BE APPLIED AT WALLS WITHOUT TILE.

M. FLOOR TILE (T-1 & T-4) & TO RECEIVE GROUT FINISH (GR-1). WALL TILE (T-2 & T-3) TO RECEIVE GROUT FINISH (GR-2).

SIGNAGE NOTES

A. ALL SIGNAGE MUST BE IN COMPLIANCE WITH UFGS 10 14 00.20.

B. ALL SIGN TYPES, TEXT WORDING AND ROOM NUMBERS TO BE VERIFIED WITH END USER.

C. REFER TO SHEET I-501 FOR SIGNAGE DETAILS.

D. REFER TO SHEET I-601 FINISH LEGEND FOR SIGNAGE FINISHES.

KEY PLAN

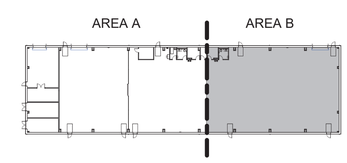

GRAPHIC SCALE:

1/8" = 1'-0" 0' 4' 8' 16'

SYM	DESCRIPTION	DATE	APPR.

NAVFAC

COMMONWEALTH OF VIRGINIA
JAMIE D. KISSEL
Cert. No. 001152
08 MAY 2026
CERTIFIED INTERIOR DESIGNER
SEAL

within
INTERIOR DESIGN
1008 GRANBY STREET
NORFOLK, VA 23510
757.224.0489
A/E INFO

APPROVED
Jaime D. Donohue, P.E.
FOR COMMANDER NAVFAC 5/13/2026
ACTIVITY
SATISFACTORY TO

DES JDK	DRW APG	CHK JDK

PM/DM SGL/MDM
BRANCH MANAGER DJD
CHIEF ENG/ARCH JWJ
FIRE PROTECTION HPN

DEPARTMENT OF THE NAVY
NAVAL FACILITIES ENGINEERING SYSTEMS COMMAND
MIDLANT DC CORE
MARINE CORPS BASE
NAVAL FACILITIES ENGINEERING SYSTEMS COMMAND ~ MIDATLANTIC
NAVAL STATION - NORFOLK, VA.
CAMP LEJEUNE, NC
P-1550 SOF MARINE RAIDER
BATTALION / COMPANY / TEAM FACILITIES
SIGNAGE PLAN - AREA B

SCALE As indicated
EPROJECT NO.:
STA. PROJ. NO.:
NAVFAC DRAWING NO. 12903789
SHEET 48 OF 122
A3
CO STG
I-122

FINAL DESIGN SUBMITTAL
DRAWFORM REVISION: 25 AUGUST 2020

File Path: W:\2206 P1550 SOF Marine Battalion Facilities\Revit\BLDG - A3\2122 WID A3_R23.rvt
Print Date: 5/8/2026 4:55:48 PM

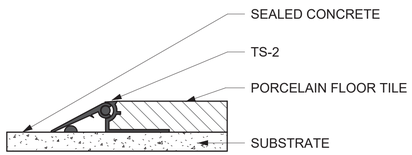

C1 CONCRETE TO TILE DETAIL

SCALE: 12" = 1'-0"

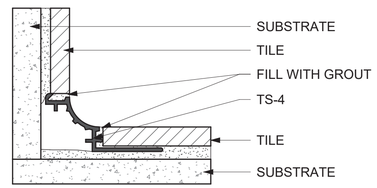

C2 INSIDE CORNER TILE DETAIL

SCALE: 12" = 1'-0"

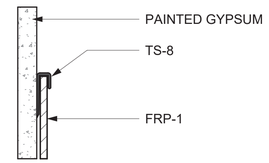

C4 FRP PANEL TO GWB

SCALE: 12" = 1'-0"

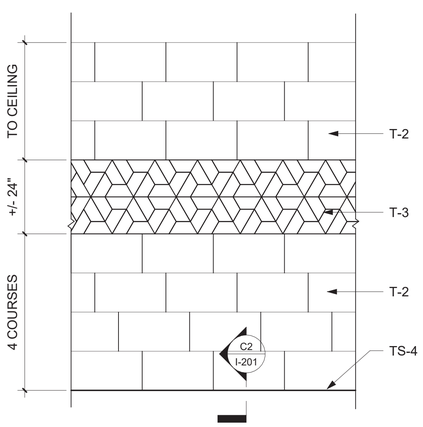

A1 TYP. RESTROOM TILE ELEVATION

SCALE: 1/2" = 1'-0"

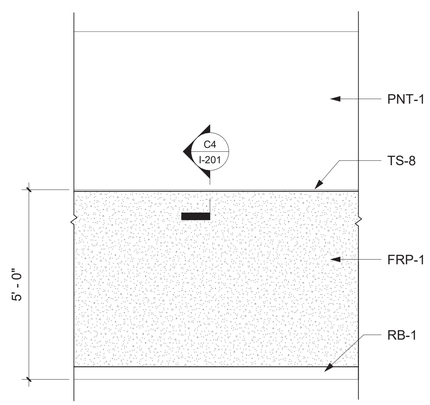

A2 TYP. JANITOR WALL ELEVATION

SCALE: 1/2" = 1'-0"

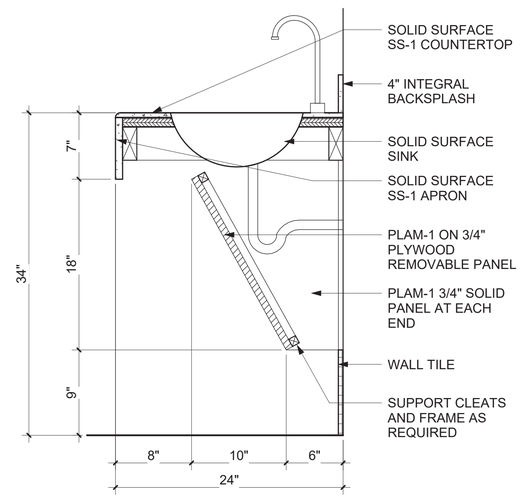

A3 SECTION - RESTROOM LAVATORY

SCALE: 1 1/2" = 1'-0"

GENERAL FINISH NOTES

A. FINISHES INDICATED ARE THE APPROVED BASIS OF DESIGN TO CONVEY COLOR, PATTERN, TEXTURE AND SALIENT CHARACTERISTICS ONLY. THE LISTING OF MANUFACTURER INFORMATION IS NOT INTENDED TO LIMIT THE SELECTION OF PRODUCTS PROVIDED BY OTHER MANUFACTURERS. PRODUCTS MEETING THESE CRITERIA WILL BE CONSIDERED AND MUST BE REVIEWED BY THE INTERIOR DESIGNER OF RECORD (IDOR) AND THE NAVFAC INTERIOR DESIGNER AND APPROVED BY THE CONTRACTING OFFICER.

B. FINISH ITEMS ARE NOT TO BE SUBSTITUTED DUE TO ORDERING LEAD TIMES. IT IS THE CONTRACTOR'S RESPONSIBILITY TO ORDER ALL MATERIALS IN TIME TO AVOID DELAYS.

C. COORDINATE THERMOSTAT LOCATIONS WITH MECHANICAL DRAWINGS AND CONSTRUCTION MANAGER. INSTALL THERMOSTATS NEAR A CORNER OF THE ROOM OR BY LIGHT SWITCHES.

D. SPRAY PAINT ELECTRICAL PANELS, ACCESS PANELS, AND EXPANSION JOINTS TO MATCH THE ADJACENT WALL COLOR. PANELS PAINTED BY BRUSH ARE NOT ACCEPTABLE

E. ALL FLOORING TRANSITIONS MUST MEET ABA GUIDELINES. FLOORING TRANSITIONS OCCURRING UNDER DOORS MUST BE CENTERED UNDER DOOR.

F. ALL WALL AND CEILING FINISHES IN VERTICAL EXIT WAYS, EXIT LOBBIES, AND EXIT CORRIDORS MUST MEET MINIMUM CLASS A RATING.

G. ROOMS IDENTIFIED TO RECEIVE TILE ON WALLS MUST INCLUDE METAL TRANSITIONS ON ALL OUTSIDE AND INSIDE CORNERS.

H. INSTALL CORNER GUARDS (CG-1) ON ALL OUTSIDE CORNERS. INSTALL END CAPS ON ALL OPEN EDED WALLS. CORNER GUARDS AND END CAPS MUST BE FULL HEIGHT AND SHOULD NOT BE USED ON CMU WALLS, TILED WALLS, OR MANUFACTURED STONE WALLS.

I. ALL AREAS TO RECEIVE RESILIENT BASE (RB-1) WITH THE EXCEPTION OF AREAS RECEIVING WALL TILE.

J. ALL WALLS TO BE PAINTED (PNT-1) UNLESS OTHERWISE INDICATED. ALL HOLLOW METAL DOORS AND DOOR FRAMES TO BE PAINTED (PNT-6). ALL GWB CEILINGS TO BE PAINTED (PNT-7).

K. ALL BASE CABINETS, WALL CABINETS, APRONS AND SHROUDS WILL BE PLASTIC LAMINATE (PLAM-1).

L. ALL COUNTERTOP AND BACK/SIDE SPLASHES TO BE SOLID SURFACE (SS-1). BACK/SIDE SPLASHES ARE ONLY TO BE APPLIED AT WALLS WITHOUT TILE.

M. FLOOR TILE (T-1 & T-4) & TO RECEIVE GROUT FINISH (GR-1). WALL TILE (T-2 & T-3) TO RECEIVE GROUT FINISH (GR-2).

GRAPHIC SCALE:

1/2" = 1'-0" 0' 1' 2' 4'

12" = 1'-0" 0" 1/2" 1" 3"

A3

SYM	DESCRIPTION	DATE	APPR.

NAVFAC

COMMONWEALTH OF VIRGINIA
JAMIE D. KISSEL
Cert. No. 001152
08 MAY 2026
CERTIFIED INTERIOR DESIGNER
SEAL

within
INTERIOR DESIGN
1008 GRANBY STREET
NORFOLK, VA 23510
757.224.0489

A/E INFO

APPROVED
Jaime D. Kissel, A.A.
FOR COMMANDER NAVFAC 5/13/2026

ACTIVITY

SATISFACTORY TO

DES	JDK	DRW	APG	CHK	JDK

PM/DM SGL/MDM
BRANCH MANAGER DJD
CHIEF ENG/ARCH JWJ
FIRE PROTECTION HPN

DEPARTMENT OF THE NAVY
NAVAL FACILITIES ENGINEERING SYSTEMS COMMAND
MIDLANT DC CORE
MARINE CORPS BASE
NAVAL FACILITIES ENGINEERING SYSTEMS COMMAND ~ MIDATLANTIC
NAVAL STATION - NORFOLK, VA.
CAMP LEJEUNE, NC
P-1550 SOF MARINE RAIDER
BATTALION / COMPANY / TEAM FACILITIES
ELEVATIONS & DETAILS

SCALE: As indicated
EPROJECT NO.:
STA. PROJ. NO.
NAVFAC DRAWING NO. 12903790
SHEET 49 OF 122

A3
CO STG

I-201

FINAL DESIGN SUBMITTAL DRAWFORM REVISION: 25 AUGUST 2020

File Path: W:\2206 P1550 SOF Marine Battalion Facilities\Revit\BLDG - A3\2122 WID A3_R23.rvt
Print Date: 5/8/2026 4:55:48 PM

INTERIOR SIGNAGE

TYPE	DESCRIPTION	QTY
S1	ROOM IDENTIFICATION SIGN	1
S2	PERMANENT ROOM IDENTIFICATION SIGN	3
S6	UNISEX ADA RESTROOM IDENTIFICATION SIGN	2
S9	EXTERIOR ROOM IDENTIFICATION SIGN	12
S10	LIVE LOAD SIGN	1
S11	PALLET RACK SIGN	13

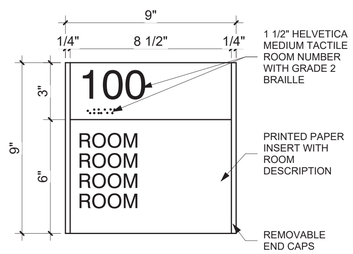

S1

ROOM IDENTIFICATION SIGN

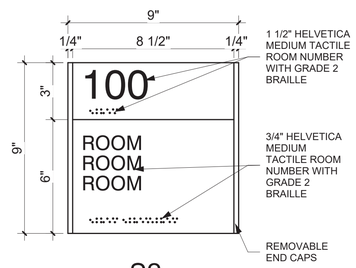

S2

PERMANENT ROOM IDENTIFICATION SIGN

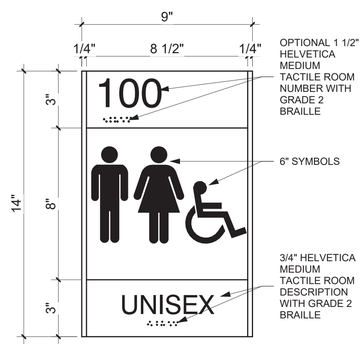

S6

UNISEX RESTROOM IDENTIFICATION SIGN

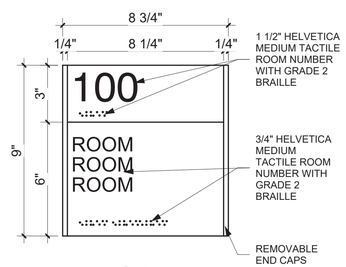

S9

EXTERIOR ROOM IDENTIFICATION SIGN

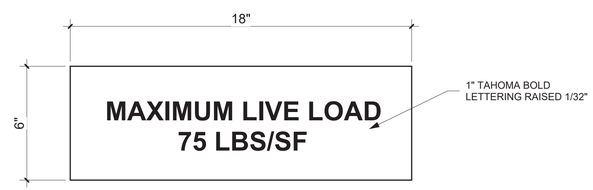

S10

LIVE LOAD SIGN

S11

PALLET RACK SIGN

A1 SIGNAGE TYPICALS

SCALE: 3" = 1'-0"

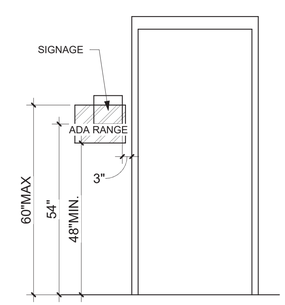

A3 TYPICAL SIGNAGE LOCATION

SCALE: 1/2" = 1'-0"

GENERAL FINISH NOTES

A. FINISHES INDICATED ARE THE APPROVED BASIS OF DESIGN TO CONVEY COLOR, PATTERN, TEXTURE AND SALIENT CHARACTERISTICS ONLY. THE LISTING OF MANUFACTURER INFORMATION IS NOT INTENDED TO LIMIT THE SELECTION OF PRODUCTS PROVIDED BY OTHER MANUFACTURERS. PRODUCTS MEETING THESE CRITERIA WILL BE CONSIDERED AND MUST BE REVIEWED BY THE INTERIOR DESIGNER OF RECORD (IDOR) AND THE NAVFAC INTERIOR DESIGNER AND APPROVED BY THE CONTRACTING OFFICER.

B. FINISH ITEMS ARE NOT TO BE SUBSTITUTED DUE TO ORDERING LEAD TIMES. IT IS THE CONTRACTOR'S RESPONSIBILITY TO ORDER ALL MATERIALS IN TIME TO AVOID DELAYS.

C. COORDINATE THERMOSTAT LOCATIONS WITH MECHANICAL DRAWINGS AND CONSTRUCTION MANAGER. INSTALL THERMOSTATS NEAR A CORNER OF THE ROOM OR BY LIGHT SWITCHES.

D. SPRAY PAINT ELECTRICAL PANELS, ACCESS PANELS, AND EXPANSION JOINTS TO MATCH THE ADJACENT WALL COLOR. PANELS PAINTED BY BRUSH ARE NOT ACCEPTABLE

E. ALL FLOORING TRANSITIONS MUST MEET ABA GUIDELINES. FLOORING TRANSITIONS OCCURRING UNDER DOORS MUST BE CENTERED UNDER DOOR.

F. ALL WALL AND CEILING FINISHES IN VERTICAL EXIT WAYS, EXIT LOBBIES, AND EXIT CORRIDORS MUST MEET MINIMUM CLASS A RATING.

G. ROOMS IDENTIFIED TO RECEIVE TILE ON WALLS MUST INCLUDE METAL TRANSITIONS ON ALL OUTSIDE AND INSIDE CORNERS.

H. INSTALL CORNER GUARDS (CG-1) ON ALL OUTSIDE CORNERS. INSTALL END CAPS ON ALL OPEN EDED WALLS. CORNER GUARDS AND END CAPS MUST BE FULL HEIGHT AND SHOULD NOT BE USED ON CMU WALLS, TILED WALLS, OR MANUFACTURED STONE WALLS.

I. ALL AREAS TO RECEIVE RESILIENT BASE (RB-1) WITH THE EXCEPTION OF AREAS RECEIVING WALL TILE.

J. ALL WALLS TO BE PAINTED (PNT-1) UNLESS OTHERWISE INDICATED. ALL HOLLOW METAL DOORS AND DOOR FRAMES TO BE PAINTED (PNT-6). ALL GWB CEILINGS TO BE PAINTED (PNT-7).

K. ALL BASE CABINETS, WALL CABINETS, APRONS AND SHROUDS WILL BE PLASTIC LAMINATE (PLAM-1).

L. ALL COUNTERTOP AND BACK/SIDE SPLASHES TO BE SOLID SURFACE (SS-1). BACK/SIDE SPLASHES ARE ONLY TO BE APPLIED AT WALLS WITHOUT TILE.

M. FLOOR TILE (T-1 & T-4) & TO RECEIVE GROUT FINISH (GR-1). WALL TILE (T-2 & T-3) TO RECEIVE GROUT FINISH (GR-2).

SIGNAGE NOTES

A. ALL SIGNAGE MUST BE IN COMPLIANCE WITH UFGS 10 14 00.20.

B. ALL SIGN TYPES, TEXT WORDING AND ROOM NUMBERS TO BE VERIFIED WITH END USER.

C. REFER TO SHEET I-501 FOR SIGNAGE DETAILS.

D. REFER TO SHEET I-601 FINISH LEGEND FOR SIGNAGE FINISHES.

GRAPHIC SCALE:

1/2" = 1'-0" 0' 1' 2' 4'

3" = 1'-0" 0' 3" 6" 9"

SYM	DESCRIPTION	DATE	APPR.

NAVFAC

COMMONWEALTH OF VIRGINIA
JAMIE D. KISSEL
Cert. No. 001152
08 MAY 2026
CERTIFIED INTERIOR DESIGNER
SEAL

within
INTERIOR DESIGN
1008 GRANBY STREET
NORFOLK, VA 23510
757 224 0489

A/E INFO

APPROVED
FOR COMMANDER NAVFAC 5/13/2026
ACTIVITY

SATISFACTORY TO

DES JDK	DRW APG	CHK JDK
PM/DM		SGL/MDM
BRANCH MANAGER		DJD
CHIEF ENG/ARCH		JWJ
FIRE PROTECTION		HPN

DEPARTMENT OF THE NAVY
NAVAL FACILITIES ENGINEERING SYSTEMS COMMAND
MIDLANT DC CORE
NAVAL FACILITIES ENGINEERING SYSTEMS COMMAND ~ MIDATLANTIC
NAVAL STATION - NORFOLK, VA
MARINE CORPS BASE
CAMP LEJEUNE, NC
P-1550 SOF MARINE RAIDER
BATTALION / COMPANY / TEAM FACILITIES
SIGNAGE DETAILS

SCALE: As indicated
EPROJECT NO.:
STA. PROJ. NO.
NAVFAC DRAWING NO. 12903791
SHEET 50 OF 122

A3
CO STG

I-501

FINAL DESIGN SUBMITTAL
DRAWFORM REVISION: 25 AUGUST 2020

File Path: W:\2206 P1550 SOF Marine Battalion Facilities\Revit\BLDG - A3\2122 WID A3_R23.rvt
Print Date: 5/8/2026 4:55:49 PM

ROOM FINISH SCHEDULE

ROOM NO.	ROOM NAME	FLOOR FINISH	BASE FINISH	WALL FINISH	CEILING FINISH	NOTES
101	OPEN STORAGE	SC-1	RB-1	PNT-1	PNT-6	
102	UNISEX	SC-1	-	T-2, T-3	ACT-1	1, 2
103	ELEC.	SC-1	RB-1	PNT-1	PNT-6	
104	BFP	SC-1	RB-1	PNT-1	PNT-6	
105	STORAGE	SC-1	RB-1	PNT-1	ACT-1	
106	UNISEX	SC-1	-	T-2, T-3	ACT-1	1, 2
107	JANITOR	SC-1	RB-1	FRP-1, PNT-1	ACT-1	1,3
108	OPEN STORAGE	SC-1	RB-1	PNT-1	PNT-6	
109	MECHANICAL	SC-1	RB-1	PNT-1	PNT-6	
110	HOT MECH	SC-1	RB-1	PNT-1	PNT-6	
111	ELECTRICAL	SC-1	RB-1	PNT-1	PNT-6	
112	SPRINKLER	SC-1	RB-1	PNT-1	PNT-6	
113	COMM	RES-1	RES-1	PNT-1	PNT-6	

FINISH LEGEND

NO.	NAME	LOCATION	MANUFACTURER	MODEL	COLOR	SIZE
ACG-1	ACOUSTICAL CEILING GRID	PAIRED WITH ACT-1	ARMSTRONG	INTERLUDE XL HRC	WHITE	9/16"
ACT-1	ACOUSTICAL CEILING TILE	NON-GWB OR EXPOSED CEILINGS	ARMSTRONG	FINE FISSURED TEGULAR	WHITE	24"X24"
CG-1	CORNER GUARD	OUTSIDE CORNERS	INPRO	TYPE 430	STAINLESS STEEL	-
FRP-1	FIBERGLASS REINFORCED PLASTIC	JANITORS CLOSET WALLS	MARLITE	PEBBLED FRP	P440N BISCUIT	-
GR-1	GROUT	FLOOR TILE (T-1)	CUSTOM	540	TRUFFLE	-
GR-2	GROUT	WALL TILE (T-2 & T-3)	CUSTOM	541	WALNUT	-
PLAM-1	PLASTIC LAMINATE	CASEWORK	FORMICA	8682-58	WOOLEN CLOTH	-
PNT-1	PAINT	PRIMARY WALLS	SHERWIN WILLIAMS	SW 6077	EVERYDAY WHITE	-
PNT-2	ACCENT PAINT	OPEN OFFICE	BENJAMIN MOORE	1302	SWEET ROSY BROWN	-
PNT-5	PAINT	DOOR FRAMES	SHERWIN WILLIAMS	SW 7674	PEPPERCORN	-
PNT-6	PAINT	GWB & EXPOSED CEILINGS	SHERWIN WILLIAMS	SW 7757	HIGH REFLECTIVE WHITE	-
RB-1	RUBBER BASE	PRIMARY BASE	ROPPE	CONTOURS SIMPLICITY #00 PV4000	123 CHARCOAL	4"H
RES-1	RESINOUS EPOXY FLOORING	COMM	STONHARD	STONCLAD ESD	PEWTER	-
S-1	SIGNAGE FINISH	FONT	2/90 SIGNS	ESSENTIALS COLLECTION	708 SOFT WHITE	-
S-2	SIGNAGE FINISH	BACKGROUND	2/90 SIGNS	ESSENTIALS COLLECTION	704 BLACK	-
S-3	SIGNAGE FINISH	END CAPS	2/90 SIGNS	ESSENTIALS COLLECTION	101 SATIN	-
SC-1	SEALED CONCRETE	SHOP & UTILITY SPACES	SCOFIELD	SELECT SEAL PLUS	CLEAR	-
SS-1	SOLID SURFACE	COUNTERTOPS	CORIAN	SOLID SURFACE COLLECTION	PTZ PEPPERED TERRAZZO	1/2" THICKNESS
T-2	WALL TILE	RESTROOMS	GARDEN STATE TILE	TRANQUIL	TAUPE BLEND	12"X24"
T-3	ACCENT WALL TILE	RESTROOMS	FLORIDA TILE	EMOTIVE	MISCHIEVOUS RED	3"X12"
TS-2	TRANSITION STRIP	FLOOR TILE TO CONCRETE	SCHLUTER	RENO-V	SATIN ANODIZED	-
TS-4	TRANSITION STRIP	INSIDE CORNER TILE TRANSITION	SCHLUTER	DILEX-AHK	SATIN ANODIZED	-
TS-8	TRANSITION STRIP	FRP TO GWB	MARLITE	EDGE M370	WHITE PVC TRIM	-

ACRONYM LEGEND

CFCI	CONTRACTOR FURNISHED CONTRACTOR INSTALLED
FF&E	FURNITURE FIXTURES & EQUIPMENT
GFGI	GOVERNMENT FURNISHED GOVERNMENT INSTALLED
HPL	HIGH PRESSURE LAMINATE
SID	STRUCTURAL INTERIOR DESIGN
U.O.N.	UNLESS OTHERWISE NOTED
V.I.F.	VERIFY IN FIELD

GENERAL FINISH NOTES

A. FINISHES INDICATED ARE THE APPROVED BASIS OF DESIGN TO CONVEY COLOR, PATTERN, TEXTURE AND SALIENT CHARACTERISTICS ONLY. THE LISTING OF MANUFACTURER INFORMATION IS NOT INTENDED TO LIMIT THE SELECTION OF PRODUCTS PROVIDED BY OTHER MANUFACTURERS. PRODUCTS MEETING THESE CRITERIA WILL BE CONSIDERED AND MUST BE REVIEWED BY THE INTERIOR DESIGNER OF RECORD (IDOR) AND THE NAVFAC INTERIOR DESIGNER AND APPROVED BY THE CONTRACTING OFFICER.

B. FINISH ITEMS ARE NOT TO BE SUBSTITUTED DUE TO ORDERING LEAD TIMES. IT IS THE CONTRACTOR'S RESPONSIBILITY TO ORDER ALL MATERIALS IN TIME TO AVOID DELAYS.

C. COORDINATE THERMOSTAT LOCATIONS WITH MECHANICAL DRAWINGS AND CONSTRUCTION MANAGER. INSTALL THERMOSTATS NEAR A CORNER OF THE ROOM OR BY LIGHT SWITCHES.

D. SPRAY PAINT ELECTRICAL PANELS, ACCESS PANELS, AND EXPANSION JOINTS TO MATCH THE ADJACENT WALL COLOR. PANELS PAINTED BY BRUSH ARE NOT ACCEPTABLE

E. ALL FLOORING TRANSITIONS MUST MEET ABA GUIDELINES. FLOORING TRANSITIONS OCCURRING UNDER DOORS MUST BE CENTERED UNDER DOOR.

F. ALL WALL AND CEILING FINISHES IN VERTICAL EXIT WAYS, EXIT LOBBIES, AND EXIT CORRIDORS MUST MEET MINIMUM CLASS A RATING.

G. ROOMS IDENTIFIED TO RECEIVE TILE ON WALLS MUST INCLUDE METAL TRANSITIONS ON ALL OUTSIDE AND INSIDE CORNERS.

H. INSTALL CORNER GUARDS (CG-1) ON ALL OUTSIDE CORNERS. INSTALL END CAPS ON ALL OPEN EDED WALLS. CORNER GUARDS AND END CAPS MUST BE FULL HEIGHT AND SHOULD NOT BE USED ON CMU WALLS, TILED WALLS, OR MANUFACTURED STONE WALLS.

I. ALL AREAS TO RECEIVE RESILIENT BASE (RB-1) WITH THE EXCEPTION OF AREAS RECEIVING WALL TILE.

J. ALL WALLS TO BE PAINTED (PNT-1) UNLESS OTHERWISE INDICATED. ALL HOLLOW METAL DOORS AND DOOR FRAMES TO BE PAINTED (PNT-6). ALL GWB CEILINGS TO BE PAINTED (PNT-7).

K. ALL BASE CABINETS, WALL CABINETS, APRONS AND SHROUDS WILL BE PLASTIC LAMINATE (PLAM-1).

L. ALL COUNTERTOP AND BACK/SIDE SPLASHES TO BE SOLID SURFACE (SS-1). BACK/SIDE SPLASHES ARE ONLY TO BE APPLIED AT WALLS WITHOUT TILE.

M. FLOOR TILE (T-1 & T-4) & TO RECEIVE GROUT FINISH (GR-1). WALL TILE (T-2 & T-3) TO RECEIVE GROUT FINISH (GR-2).

FINISH SCHEDULE KEY NOTES

1. FLOOR TILE INSTALLATION TO BE 1/3 OFFSET.
2. SEE A1/I-201 FOR TYPICAL RESTROOM WALL TILE ELEVATION.
3. SEE A2/I-201 FOR TYPICAL JANITOR WALL ELEVATION.

SYM	DESCRIPTION	DATE	APPR.

NAVFAC

COMMONWEALTH OF VIRGINIA
JAMIE D. KISSEL
Cert. No. 001152
08 MAY 2026
CERTIFIED INTERIOR DESIGNER
SEAL

within
INTERIOR DESIGN
1008 GRANBY STREET
NORFOLK, VA 23510
757.224.0489
A/E INFO

APPROVED
FOR COMMANDER NAVFAC 5/13/2026
ACTIVITY
SATISFACTORY TO

DES JDK	DRW APG	CHK JDK
PM/DM		SGL/MDM
BRANCH MANAGER		DJD
CHIEF ENG/ARCH		JWJ
FIRE PROTECTION		HPN

DEPARTMENT OF THE NAVY
NAVAL FACILITIES ENGINEERING SYSTEMS COMMAND ~ MIDATLANTIC
MIDLANT DC CORE
MARINE CORPS BASE
NAVAL FACILITIES ENGINEERING SYSTEMS COMMAND
NAVAL STATION - NORFOLK, VA.
CAMP LEJEUNE, NC
P-1550 SOF MARINE RAIDER
BATTALION / COMPANY / TEAM FACILITIES
SCHEDULES & LEGENDS

SCALE: 1/8" = 1'-0"
EPROJECT NO.:
STA. PROJ. NO.
NAVFAC DRAWING NO. 12903792
SHEET 51 OF 122
A3
CO STG
I-601
FINAL DESIGN SUBMITTAL
DRAWFORM REVISION: 25 AUGUST 2020

File Path: W:\2206 P1550 SOF Marine Battalion Facilities\Revit\BLDG - A3\2122 WID A3_R23.rvt
Print Date: 5/8/2026 4:55:49 PM

FIRE ALARM GENERAL NOTES:

1. GENERAL SCOPE - INSTALL A COMBINED FIRE ALARM AND MASS NOTIFICATION SYSTEM FOR THE COMPANY STORAGE BUILDING.

2. APPLICABLE CODES:

UFC 3-520-01	INTERIOR ELECTRICAL SYSTEMS, 12 APRIL 2021
UFC 3-600-01	FIRE PROTECTION ENGINEERING FOR FACILITIES, 6 MAY 2021
UFC 4-021-01	DESIGN AND O&M: MASS NOTIFICATION SYSTEMS, JANUARY 2010
NFPA 70	NATIONAL ELECTRICAL CODE (NEC), 2023
NFPA 72	NATIONAL FIRE ALARM AND SIGNALING CODE, 2022

3. DEVICES MUST BE UL LISTED.

4. SIGNALING LINE CIRCUITS, NOTIFICATION APPLIANCE CIRCUITS, AND INITIATING DEVICE CIRCUITS MUST BE CLASS B.

5. CONDUIT AND BACK BOXES MUST BE CONCEALED TO THE MAXIMUM EXTENT POSSIBLE. JUNCTION BOXES AND COVERS MUST BE PAINTED RED IN UNFINISHED AREAS. IN FINISHED AREAS, CONDUIT AND JUNCTION BOXES MUST BE PAINTED TO MATCH THE ROOM FINISH. FIRE ALARM CONDUITS IN FINISHED AREAS MUST BE MARKED WITH 3/4-IN RED BANDS EVERY 10-FT AND AT EACH SIDE OF A FLOOR, WALL, OR CEILING PENETRATION. JUNCTION BOXES MUST HAVE A PERMANENT, MACHINE PRINTED LABEL READING "FIRE ALARM CIRCUIT" ON THE INSIDE COVER.

6. SYSTEM POWER AND GROUND CIRCUITS MUST BE TYPE "THHN" SOLID COPPER SIZED ACCORDING TO THE MANUFACTURER'S RECOMMENDATIONS AND THE APPLICABLE CODES AND BE INSTALLED IN EMT TYPE CONDUIT.

7. WIRING, CABLES, BOXES, TROUGHS AND OTHER RELATED EQUIPMENT MUST BE INSTALLED IN STRICT COMPLIANCE WITH THE NATIONAL ELECTRICAL CODE (NEC).

8. MANUAL FIRE ALARM STATION MUST BE DOUBLE-ACTION TYPE AND SEMI-FLUSH MOUNTED IN FINISHED SPACES.

9. WALL-MOUNTED VISIBLE AND COMBINATION AUDIBLE/VISIBLE ALARM NOTIFICATION APPLIANCES MUST BE MOUNTED SUCH THAT THE ENTIRE LENS IS BETWEEN 80-IN AND 96-IN ABOVE THE FINISHED FLOOR. WHERE LOW CEILING HEIGHTS DO NOT PERMIT DEVICES AT A MINIMUM OF 80-IN, DEVICES MUST BE MOUNTED WITHIN 6-IN OF THE CEILING.

10. VISIBLE DEVICES AND VISIBLE/AUDIBLE DEVICES MUST UTILIZE A CLEAR STROBE AND BE MARKED "ALERT" FOR FIRE ALARM USE. SEE MASS NOTIFICATION GENERAL NOTES FOR ADDITIONAL REQUIREMENTS.

11. NOTIFICATION APPLIANCE LOCATIONS MUST BE COORDINATED WITH AISLES CREATED BY CAGES AND CAGE WALLS.

12. SOUND PRESSURE LEVEL FROM AUDIBLE ALARM APPLIANCES MUST NOT EXCEED 110 DBA IN ANY OCCUPIED AREA.

13. AREAS MUST BE INTELLIGIBLE WITH A COMMON INTELLIGIBILITY SCALE (CIS) RATING GREATER THAN 0.7. A SPEECH TRANSMISSION INDEX (STI) RATING OF 0.5 IS CONSIDERED EQUIVALENT TO A CIS RATING OF 0.7. CIS RATINGS LESS THAN 0.7 IS PERMITTED IN AREAS WITH EXCESSIVE HARD SURFACES PROVIDED A CIS RATING GREATER THAN 0.7 IS ACHIEVED WITHIN A 33-FT TRAVEL DISTANCE. NORMALLY UNOCCUPIED AREAS ARE PERMITTED TO HAVE A CIS SCORE LESS THAN 0.7 PROVIDED ACCEPTABLE CIS SCORE CAN BE REACHED WITHIN 50-FT TRAVEL DISTANCE.

14. 25% SPARE CAPACITY MUST BE PROVIDED ON POWER SUPPLIES, AMPLIFIERS, AND INDIVIDUAL CIRCUITS.

15. SECONDARY POWER SUPPLY MUST BE VIA BATTERIES CAPABLE OF OPERATING THE FIRE ALARM SYSTEM ON STANDBY FOR 48 HOURS FOLLOWED BY 15 MINUTES IN ALARM OR OPERATING THE MASS NOTIFICATION SYSTEM IN ALARM FOR 60 MINUTES, WHICH EVER IS GREATER. CHARGING AND METERING MUST BE PROVIDED IN ACCORDANCE WITH NFPA 72.

16. THE FIRE ALARM SYSTEM MUST MONITOR THE SPRINKLER SYSTEM FLOW AND TAMPER SWITCHES.

17. DEDICATED BATTERY CABINETS MUST BE MOUNTED NO MORE THAN 3-FT FROM THE FINISHED FLOOR.

18. LABEL FIRE ALARM APPLIANCES AND DEVICE WITH THE ASSIGNED ADDRESS. FOR DEVICES LOCATED ABOVE A CEILING, PROVIDE A LEGIBLE TYPED LABEL ON THE CEILING RID TO IDENTIFY ITS PURPOSE AND LOCATION.

19. PROVIDE DOCUMENT CABINET ADJACENT TO FMCP. CABINET MUST BE STEEL, LOCKING, WITH A HINGE-MOUNTED DOOR KEYED THE SAME AS THE FMCP. LABEL THE EXTERIOR OF THE CABINET "SYSTEMS RECORD DOCUMENTS".

20. DRAWINGS ARE CONCEPTUAL IN NATURE. THEY DO NOT SHOW THE EXACT LOCATIONS OF COMPONENTS OR ALL SYSTEM COMPONENTS. CONTRACTOR MUST PROVIDE ADDITIONAL COMPONENTS FOR A PROPERLY INSTALLED AND FUNCTIONAL SYSTEM IN ACCORDANCE WITH APPLICABLE CODES.

MASS NOTIFICATION GENERAL NOTES:

1. MASS NOTIFICATION TO BE PROVIDED VIA COMBINED FIRE ALARM AND MASS NOTIFICATION SYSTEM. THE SYSTEM MUST BE DESIGNED UNDER THE SUPERVISION OF A NICET LEVEL IV FIRE ALARM TECHNICIAN AND REVIEWED BY THE QUALIFIED FIRE PROTECTION ENGINEER.

2. A CLEAR STROBE MUST BE UTILIZED FOR FIRE ALARM AND MASS NOTIFICATION. STROBES MUST BE MARKED "ALERT." STROBE LOCATIONS SHOWN ON DRAWING INDICATE APPROXIMATE LOCATION OF REQUIRED VISUAL NOTIFICATION FOR THE FIRE ALARM/MASS NOTIFICATION SYSTEM.

3. SPEAKERS MUST BE PROVIDED OUTSIDE OF THE BUILDING NEAR THE FACILITY ENTRANCES. THESE DEVICES MUST BE MULTI-TAP WITH NO MORE THAN A 15-W MAXIMUM SETTING AND ARE INTENDED TO SERVE AREAS COMMONLY USED BY BUILDING OCCUPANTS FOR AREAS AT A DISTANCE UP TO 16-FT FROM THE BUILDING.

4. EXTERIOR SPEAKERS MUST BE PROVIDED ON A DEDICATED CIRCUIT. PROVIDE AN EXTERIOR SPEAKER BYPASS SWITCH AT THE FMCP AND LOC.

FIRE ALARM LEGEND

FMCP	FIRE ALARM MASS NOTIFICATION CONTROL PANEL
TRN	MASS NOTIFICATION TRANSCEIVER (PROVIDED BY OTHERS)
NAC	NOTIFICATION CIRCUIT POWER BOOSTER, EXTENDER PANEL
AMP	AMPLIFIER
ANN	REMOTE ANNUNCIATOR PANEL
LOC	LOCAL OPERATING CONSOLE
CD	CEILING MOUNTED COMBINATION SPEAKER/CLEAR STROBE (SUPERSCRIPT INDICATES CANDELA RATING)
CD	WALL MOUNTED COMBINATION SPEAKER/CLEAR STROBE (SUPERSCRIPT INDICATES CANDELA RATING)
	WALL MOUNTED SPEAKER
	SPRINKLER BELL
MM	MONITOR MODULE
CM	CONTROL MODULE
RM	RELAY MODULE
P	MANUAL PULL STATION
SS	SURGE SUPPRESSOR
	TAMPER SWITCH
	WATER FLOW SWITCH
	AREA SMOKE DETECTOR
	DUCT SMOKE DETECTOR
	CARBON MONOXIDE DETECTOR
RTS	KEYED TEST/RESET SWITCH FOR DUCT SMOKE DETECTOR
WP	WEATHERPROOF

JENSEN HUGHES

SYM	DESCRIPTION	DATE	APPR

NAVFAC

COMMONWEALTH OF VIRGINIA
AARON P FREID
Lic. No. 044409
05.08.2026
PROFESSIONAL ENGINEER
SEAL

mbf architects pa
317-C Pollock Street | New Bern, NC 28560
252.637.6373 | mbfarchitects.com
A/E INFO

APPROVED
FOR COMMANDER NAVFAC 5/13/2026
ACTIVITY
SATISFACTORY TO

DES	APF	DRW AHE	CHK AJW
PM/DM			SGL/MDM
BRANCH MANAGER			HPN
CHIEF ENG/ARCH			JWJ
FIRE PROTECTION			HPN

DEPARTMENT OF THE NAVY
NAVAL FACILITIES ENGINEERING SYSTEMS COMMAND
NAVAL FACILITIES ENGINEERING SYSTEMS COMMAND – MIDATLANTIC
MIDLANT DC CORE
NAVAL STATION - NORFOLK, VA
MARINE CORPS BASE
CAMP LEJEUNE, NC

P-1550 SOF MARINE RAIDER
BATTALION / COMPANY / TEAM FACILITIES

FIRE ALARM NOTES AND LEGEND - COMPANY STORAGE BUILDING

SCALE: AS INDICATED
EPROJECT NO.: 1701820
CONSTR. CONTR. NO.
NAVFAC DRAWING NO. 12903794
SHEET 52 OF 122
A3
CO STG
FA001
FINAL SUBMITTAL
DRAWFORM REVISION: 25 AUGUST 2020

Y:\Shared\FPS\Legacy\VirginiaBeach_2022 Projects\22015 1AJW22015 MBFA - MCAS New River P-1550 SOF Marine Battalion Co Facilities\DWG - Revit 2023\Central Models\BLDG P1550-1701820-A3-F.rvt
File Print 5/6/2026 2:14:25 PM

KEYNOTES X (THIS SHEET ONLY)

1. PROVIDE CONTROL MODULE FOR ACTIVATION OF EGRESS LIGHTING. COORDINATE LOCATION WITH ELECTRICAL CONTRACTOR.
2. PROVIDE CONTROL MODULE FOR DEACTIVATION OF ACCESS CONTROL SYSTEM. COORDINATE LOCATION WITH BASE COMMUNICATION OFFICE.
3. PROVIDE DUCT SMOKE DETECTOR ON SUPPLY SIDE OF AHU-1. COORDINATE LOCATION WITH MECHANICAL CONTRACTOR.
4. PROVIDE MONITOR MODULES TO SUPERVISE THE FIRE PUMP CONTROLLER. SUPERVISE THE FOLLOWING POINTS: FIRE PUMP RUNNING; FIRE PUMP LOSS OF POWER; FIRE PUMP PHASE REVERSAL; AND FIRE PUMP ROOM LOW TEMPERATURE. COORDINATE LOCATION WITH SPRINKLER CONTRACTOR.

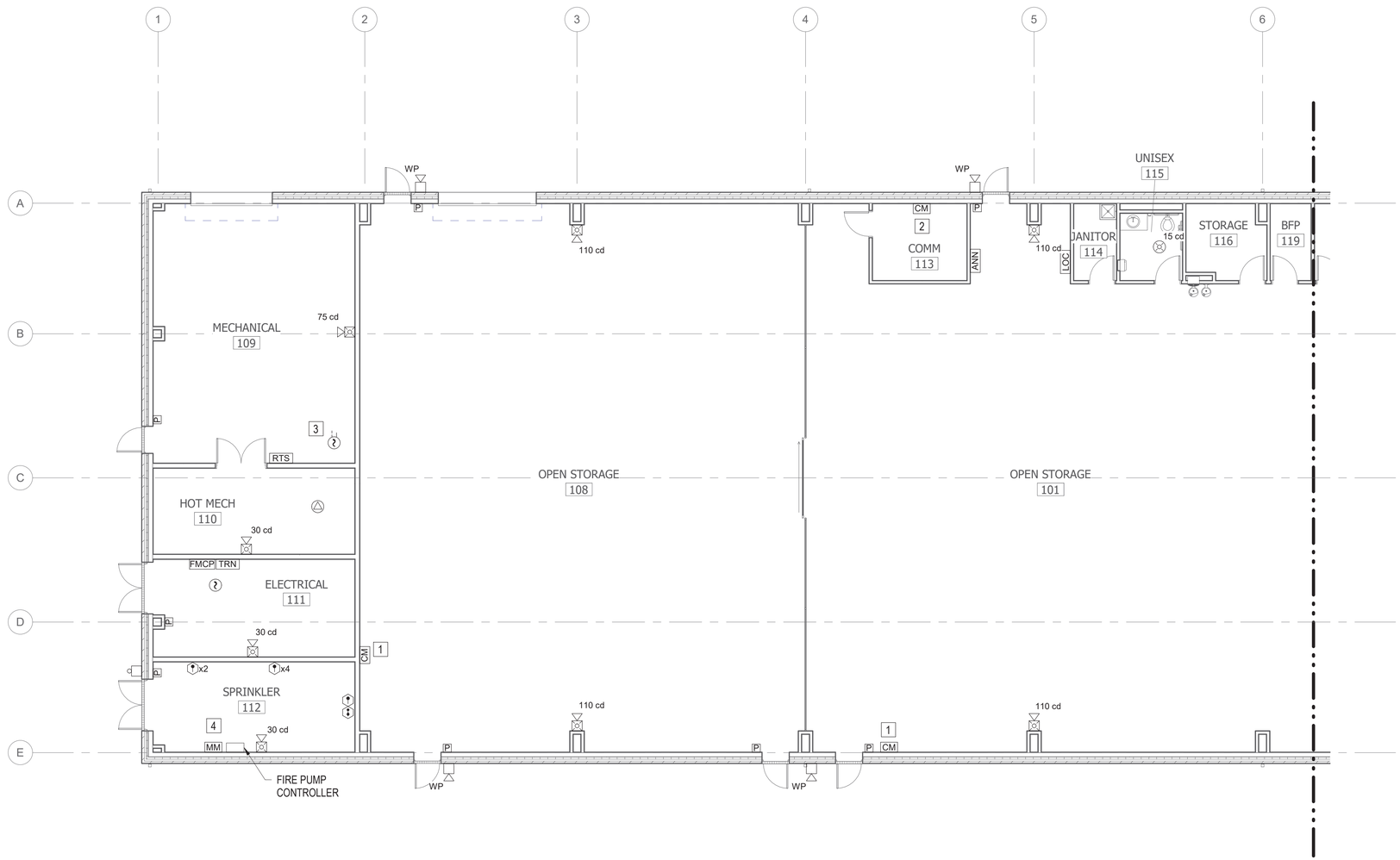

A1 FIRE ALARM FLOOR PLAN - COMPANY STORAGE BULDING AREA A

SCALE: 1/8" = 1'-0"

A4 KEYPLAN

SCALE: 1" = 40'-0"

GRAPHIC SCALE: 1/8"=1'-0"

GRAPHIC SCALE: 1"=40'

JENSEN HUGHES

SYM	DESCRIPTION	DATE	APPR

NAVFAC

COMMONWEALTH OF VIRGINIA
AARON P FREID
Lic. No. 044409
05.08.2026
PROFESSIONAL ENGINEER
SEAL

mbf architects pa
317-C Pollock Street | New Bern, NC 28560
252.637.6373 | mbfarchitects.com
A/E INFO

APPROVED
FOR COMMANDER NAVFAC 5/13/2026
ACTIVITY
SATISFACTORY TO
DES APF DRW AHE CHK AJW
PM/DM SGL/MDM
BRANCH MANAGER HPN
CHIEF ENG/ARCH JWJ
FIRE PROTECTION HPN

DEPARTMENT OF THE NAVY
NAVAL FACILITIES ENGINEERING SYSTEMS COMMAND ~ MIDATLANTIC
MIDLANT DC CORE
MARINE CORPS BASE
NAVAL FACILITIES ENGINEERING SYSTEMS COMMAND
NAVAL STATION - NORFOLK, VA
CAMP LEJEUNE, NC
P-1550 SOF MARINE RAIDER
BATTALION / COMPANY / TEAM FACILITIES
FIRE ALARM FLOOR PLAN - COMPANY STORAGE BUILDING
AREA A

SCALE: AS INDICATED
EPROJECT NO.: 1701820
CONSTR. CONTR. NO.
NAVFAC DRAWING NO. 12903795
SHEET 53 OF 122
A3
CO STG
FA101
FINAL SUBMITTAL
DRAWFORM REVISION: 25 AUGUST 2020

Y:\Shared\FPS\Legacy\VirginiaBeach_2022 Projects\22015 1AJW22015 MBFA - MCAS New River P-1550 SOF Marine Battalion Co Facilities\DWG - Revit 2023\Central Models\BLDG P1550-1701820-A3-F.rvt
File
Print
5/6/2026 2:14:27 PM

KEYNOTES X (THIS SHEET ONLY)

1. PROVIDE CONTROL MODULE FOR ACTIVATION OF EGRESS LIGHTING. COORDINATE LOCATION WITH ELECTRICAL CONTRACTOR.

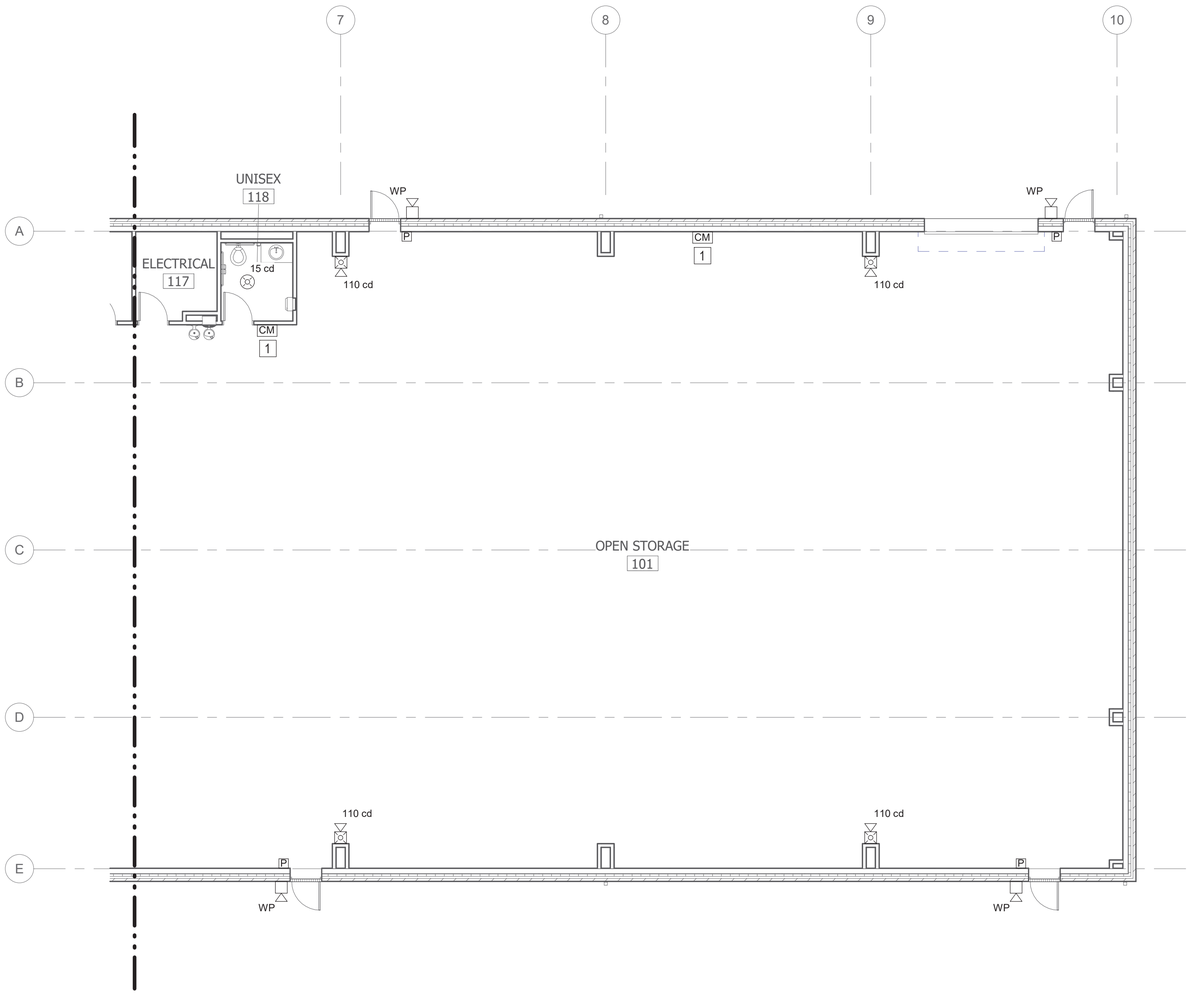

A2 FIRE ALARM FLOOR PLAN - COMPANY STORAGE BUILDING AREA B

SCALE: 1/8" = 1'-0"

A4 KEYPLAN

SCALE: 1" = 40'-0"

GRAPHIC SCALE: 1/8"=1'-0"

8' 0 4' 8' 16'

GRAPHIC SCALE: 1"=40'

40' 0 40' 80'

JENSEN HUGHES

SYM	DESCRIPTION	DATE	APPR

NAVFAC

COMMONWEALTH OF VIRGINIA
AARON P FREID
Lic. No. 044409
05.08.2026
PROFESSIONAL ENGINEER
SEAL

mbf architects pa
317-C Pollock Street | New Bern, NC 28560
252.637.6373 | mbfarchitects.com
A/E INFO

APPROVED
FOR COMMANDER NAVFAC 5/15/2026
ACTIVITY

SATISFACTORY TO

DES	APF	DRW	AHE	CHK	AJW
PM/DM	SGL/MDM				
BRANCH MANAGER	HPN				
CHIEF ENG/ARCH	JWJ				
FIRE PROTECTION	HPN				

DEPARTMENT OF THE NAVY
NAVAL FACILITIES ENGINEERING SYSTEMS COMMAND
MID-LANT DC CORE
MARINE CORPS BASE
NAVAL FACILITIES ENGINEERING SYSTEMS COMMAND ~ MIDATLANTIC
NAVAL STATION - NORFOLK, VA
CAMP LEJEUNE, NC
P-1550 SOF MARINE RAIDER
BATTALION / COMPANY / TEAM FACILITIES
FIRE ALARM FLOOR PLAN - COMPANY STORAGE BUILDING
AREA B

SCALE: AS INDICATED
EPROJECT NO.: 1701820
CONSTR. CONTR. NO.
NAVFAC DRAWING NO. 12903796
SHEET 54 OF 122
FA102

A3
CO STG
FINAL SUBMITTAL

DRAWFORM REVISION: 25 AUGUST 2020

File Y:\Shared\FPS\Legacy\VirginiaBeach_2022 Projects\22015 1AJW22015 MBFA - MCAS New River P-1550 SOF Marine Battalion Co Facilities\DWG - Revit 2023\Central Models\BLDG P1550-1701820-A3-F.rvt
Print 5/6/2026 2:14:29 PM

ALL STROBES AND SPEAKER/STROBES MUST BE INSTALLED WHERE INDICATED ON THE FIRE PROTECTION PLANS. THE ELECTRICAL CONTRACTOR MUST PROVIDE THE NECESSARY MOUNTING HARDWARE TO ACHIEVE THIS PURPOSE.

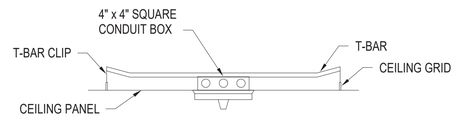

C2 TYPICAL SPEAKER/STROBE MOUNTING DETAIL

SCALE: NOT TO SCALE

DO NOT INSTALL WITHIN 3' OF ANY HVAC SUPPLY/RETURN DIFFUSER OR TIP OF CEILING FAN BLADE.

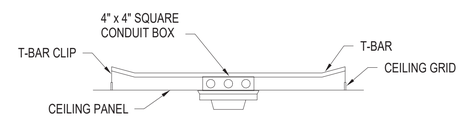

C3 TYPICAL SMOKE DETECTOR MOUNTING DETAIL

SCALE: NOT TO SCALE

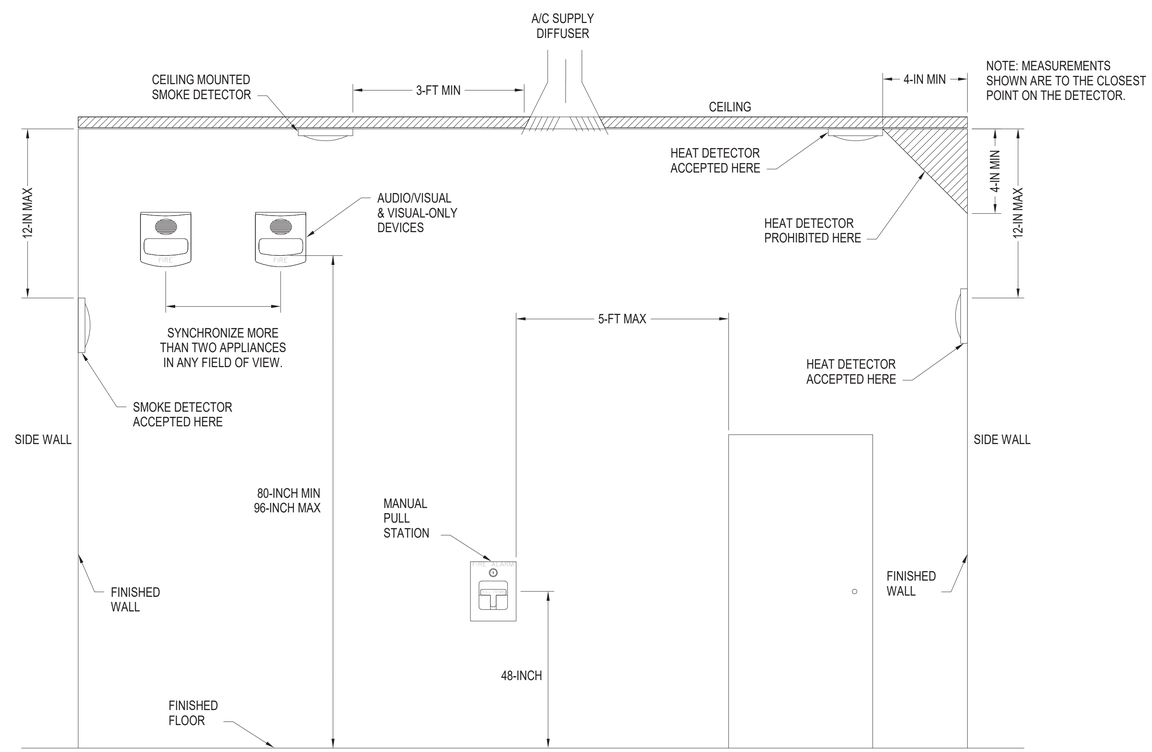

A2 TYPICAL DEVICE MOUNTING HEIGHTS

SCALE: NOT TO SCALE

JENSEN HUGHES

SYM.	DESCRIPTION	DATE	APPR.

NAVFAC

COMMONWEALTH OF VIRGINIA
AARON P FREID
Lic. No. 044409
05.08.2026
PROFESSIONAL ENGINEER
SEAL

mbf architects pa
317-C Pollock Street | New Bern, NC 28560
252.637.6373 | mbfarchitects.com
A/E INFO

APPROVED
FOR COMMANDER NAVFAC 5/13/2026
ACTIVITY

SATISFACTORY TO

DES	APF	DRW	AHE	CHK	AJW
PM/DM					SGL/MDM
BRANCH MANAGER					HPN
CHIEF ENG/ARCH					JWJ
FIRE PROTECTION					HPN

DEPARTMENT OF THE NAVY
NAVAL FACILITIES ENGINEERING SYSTEMS COMMAND
MIDLANT DC CORE
MARINE CORPS BASE
NAVAL FACILITIES ENGINEERING SYSTEMS COMMAND ~ MIDATLANTIC
NAVAL STATION - NORFOLK, VA
CAMP LEJEUNE, NC
P-1550 SOF MARINE RAIDER BATTALION / COMPANY / TEAM FACILITIES
FIRE ALARM DETAILS

SCALE: AS INDICATED
EPROJECT NO.: 1701820
CONSTR. CONTR. NO.

A3
CO STG
NAVFAC DRAWING NO. 12903797
SHEET 55 OF 122
FA501

FINAL SUBMITTAL
DRAWFORM REVISION: 25 AUGUST 2020

Y:\Shared\FPS\Legacy\VirginiaBeach_2022 Projects\22015 1AJW22015 MBFA - MCAS New River P-1550 SOF Marine Battalion Co Facilities\DWG - Revit 2023\Central Models\BLDG P1550-1701820-A3-F.rvt
File
Print
5/6/2026 2:14:30 PM

FIRE ALARM VOICE EVACUATION MESSAGES

SCENARIO	RECORDED VOICE	ALERT TONE	RECORDED MESSAGE
FIRE ALARM	FEMALE	TEMPORAL THREE - 520 HZ	MAY I HAVE YOUR ATTENTION PLEASE. MAY I HAVE YOUR ATTENTION PLEASE. A FIRE HAS BEEN REPORTED IN THE BUILDING. PLEASE LEAVE THE BUILDING BY THE NEAREST EXIT OR EXIT STAIR.
CARBON MONOXIDE	FEMALE	TEMPORAL FOUR - 520 HZ	MAY I HAVE YOUR ATTENTION PLEASE. MAY I HAVE YOUR ATTENTION PLEASE. HIGH LEVELS OF CARBON MONOXIDE HAVE BEEN DETECTED IN THE BUILDING. PLEASE LEAVE THE BUILDING BY THE NEAREST EXIT OR EXIT STAIR.

C1 FIRE ALARM VOICE EVACUATION MESSAGES

SCALE: NOT TO SCALE

FIRE ALARM INPUT	ACTIVATE VISUAL "ALERT" STROBES	ACTIVATE AUDIO CIRCUITS AND BROADCAST FIRE ALARM MESSAGE	ACTIVATE AUDIO CIRCUITS AND BROADCAST CARBON MONOXIDE MESSAGE	ACTIVATE AUDIO CIRCUITS AND BROADCAST MASS NOTIFICATION MESSAGE	ACTIVATE EGRESS LIGHTING	DEACTIVATE ACCESS CONTROL	ACTIVATE SPRINKLER ALARM BELL	SHUT DOWN ASSOCIATED AIR HANDLER	ALARM CONDITION AT FMCP	SUPERVISORY CONDITION AT FMCP	TROUBLE CONDITION AT FMCP	TRANSMIT SIGNAL TO SUPERVISING STATION
MANUAL PULL STATION	●	●			●				●			●
AUTOMATIC SPRINKLER FLOW SWITCH	●	●			●	●	●		●			●
AUTOMATIC SPRINKLER SYSTEM TAMPER SWITCH										●		●
AREA SMOKE DETECTOR ACTIVATION	●	●			●	●			●			●
DUCT SMOKE DETECTOR ACTIVATION								●		●		●
CARBON MONOXIDE DETECTOR ACTIVATION	●		●		●	●			●			●
FIRE PUMP RUNNING										●		●
FIRE PUMP LOSS OF POWER										●		●
FIRE PUMP PHASE REVERSAL										●		●
FIRE PUMP ROOM LOW TEMPERATURE										●		●
FMCP CIRCUIT FAULT (OPEN, GROUND, SHORT)											●	●
OTHER TROUBLE CONDITION											●	●
MASS NOTIFICATION INPUT												
FMCP EMERGENCY LIVE PAGING [1,2]	●			●								

1 EMERGENCY MASS NOTIFICATION MESSAGES (LIVE) MUST TEMPORARILY OVERRIDE FIRE ALARM AUDIBLE EVACUATION.

2 STROBES MUST CONTINUE TO OPERATE FOR AT LEAST 15-SECONDS AFTER THE END OF THE MESSAGE.

A1 FIRE ALARM/MASS NOTIFICATION SYSTEM SEQUENCE OF OPERATIONS

SCALE: NOT TO SCALE

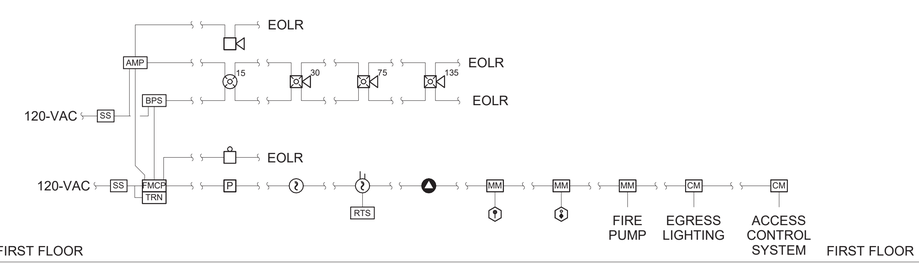

A3 FIRE ALARM/MASS NOTIFICATION SYSTEM RISER DIAGRAM

SCALE: NOT TO SCALE

JENSEN HUGHES

SYM	DESCRIPTION	DATE	APPR

NAVFAC

COMMONWEALTH OF VIRGINIA
AARON P FREID
Lic. No. 044409
05.08.2026
PROFESSIONAL ENGINEER
SEAL

mbf architects pa
317-C Pollock Street | New Bern, NC 28560
252.637.6373 | mbfarchitects.com
A/E INFO

APPROVED
FOR COMMANDER NAVFAC 5/13/2026
ACTIVITY

SATISFACTORY TO
DES APF DRW AHE CHK AJW
PM/DM SGL/MDM
BRANCH MANAGER HPN
CHIEF ENG/ARCH JWJ
FIRE PROTECTION HPN

DEPARTMENT OF THE NAVY
NAVAL FACILITIES ENGINEERING SYSTEMS COMMAND ~ MIDATLANTIC
MIDLANT DC CORE
MARINE CORPS BASE
NAVAL FACILITIES ENGINEERING SYSTEMS COMMAND
NAVAL STATION - NORFOLK, VA
CAMP LEJEUNE, NC
P-1550 SOF MARINE RAIDER BATTALION / COMPANY / TEAM FACILITIES
FIRE ALARM DETAILS

SCALE: AS INDICATED
EPROJECT NO.: 1701820
CONSTR. CONTR. NO.

A3
CO STG
NAVFAC DRAWING NO. 12903798
SHEET 56 OF 122
FA502

FINAL SUBMITTAL
DRAWFORM REVISION: 25 AUGUST 2020

Y:\Shared\FPS\Legacy\VirginiaBeach_2022 Projects\22015 1AJW22015 MBFA - MCAS New River P-1550 SOF Marine Battalion Co Facilities\DWG - Revit 2023\Central Models\BLDG P1550-1701820-A3-F.rvt
File
Print
5/6/2026 2:14:31 PM

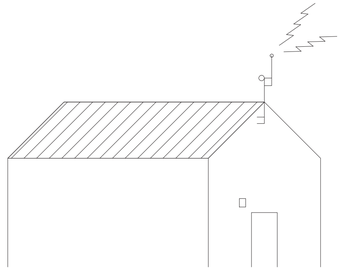

PROVIDE 8"X8"X8" PULL BOX ABOVE/ADJACENT TO THE MNS EQUIPMENT AREA. PROVIDE 1.50" RMC FROM MNS ENCLOSURE TO THE PULL BOX AND 1.50" RMC FROM THE PULL BOX TO A POINT 4 FEET ABOVE THE APEX OF THE ROOFLINE. GROUND THE RMC MAST TO THE BUILDING GROUND. PROVIDE THE RMC IN THE MOST DIRECT VERTICAL ROUTE POSSIBLE, IF SHARP BENDS ARE REQUIRED THEN UTILIZE ADDITIONAL PULL BOXES APPROPRIATELY. TERMINATE THE TOP OF THE EXTERIOR RMC WITH A U.L. LISTED WEATHER HEAD. GROUND THE RMC TO THE ROOF GROUNDING GRID OR THE BUILDING GROUND SYSTEM. INSTALL A PULLSTRING IN THE RMC AND CLEARLY LABEL THE MNS MOUNTING AREA AND ASSOCIATED CONDUIT FOR "BASE MNS" USE. DIRECTIONAL ANTENNAE MAY BE MOUNTED ON FACILITIES BELOW ROOFLINE IF PLACEMENT OF ANTENNA LOCATION IS PRE-APPROVED BY NIWC OR PHYSICAL SECURITY PERSONNEL DURING THE DESIGN STAGES. REFER ANY QUESTIONS TO PMO PHYSICAL SECURITY OFFICE OR NIWC MNS SME. (843) 718-4759.

TYPICAL BASE-WIDE MNS-NEW CONSTRUCTION REQUIREMENTS

* MNS MOUNTING AREA, ENCLOSURE, CONDUIT ROUTING, CONDUIT CONNECTIONS AND GENERAL ORIENTATION WILL VARY BASED ON BUILDING AND FACP DESIGN

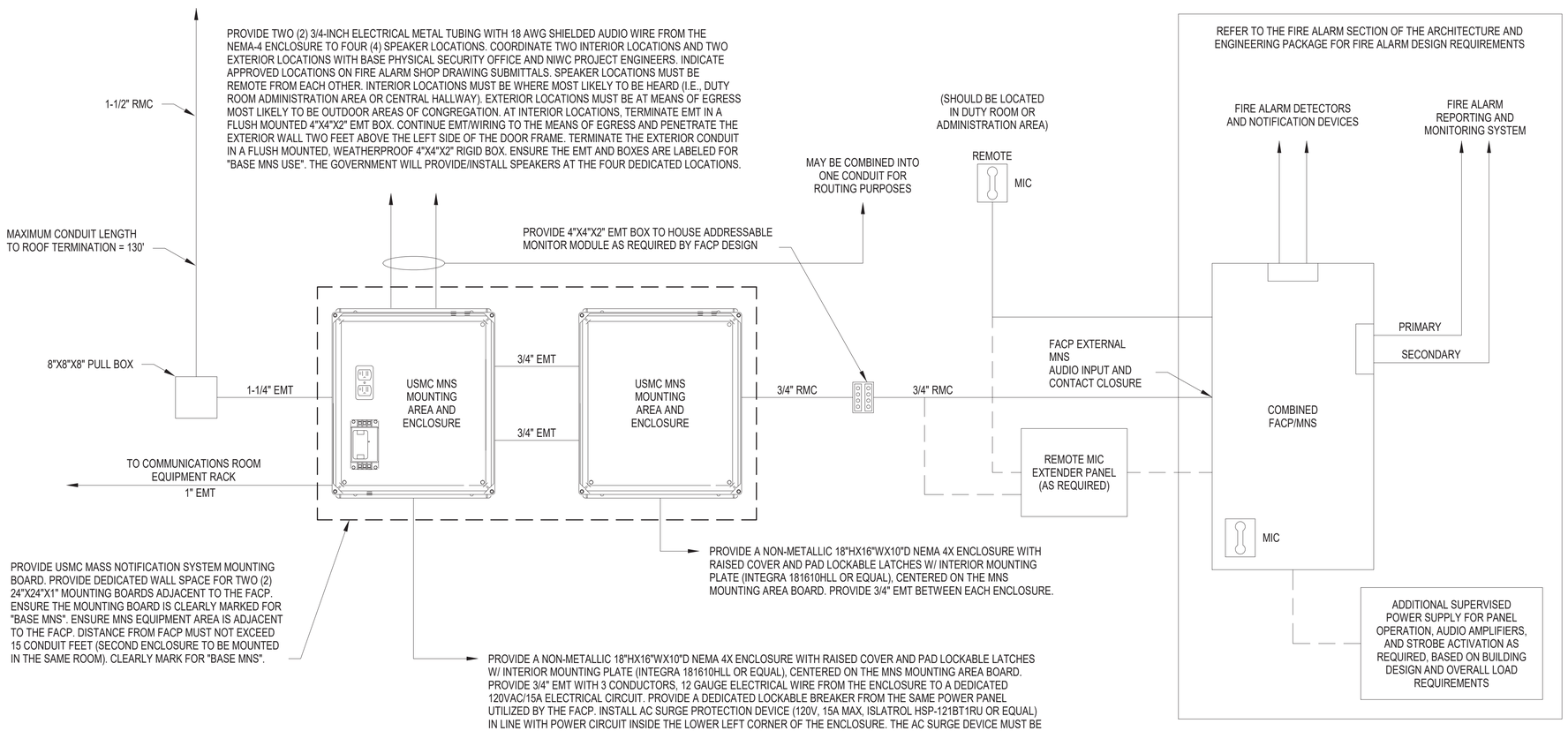

* BASE PHYSICAL SECURITY OFFICE AND NIWC ATLANTIC MCESS PROGRAM OFFICE ARE THE POINTS OF CONTACT FOR THE MASS NOTIFICATION SYSTEM REQUIREMENTS. NIWC ATLANTIC CONTRACTORS WILL INSTALL THE USMC MNS EQUIPMENT IN THE INFRASTRUCTURE PROVIDED BY THE MILCON AS PER THIS DIAGRAM.

ALARM PRIORITY

1. LOCAL MICROPHONE
2. MASS NOTIFICATION SYSTEM
3. FIRE ALARM

MNS AND MONITORING NOTES:

1. THE FIRE ALARM AND DETECTION SYSTEM IS TO BE FULLY COMPLIANT WITH THE CURRENT EDITION OF NFPA 72 FOR AN EMERGENCY VOICE ALARM COMMUNICATION SYSTEM. THE SYSTEM MUST INTEGRATE WITH THE INSTALLATION BASE-WIDE MASS NOTIFICATION SYSTEM (SIRCOM SMART ALERT [SISA] AND LEGACY WAVES).
2. THE FACP MUST BE CAPABLE OF ACCEPTING AN AUXILLARY LINE LEVEL AUDIO INPUT OF 1 VOLT PK-PK OR .707 VRMS.
3. FACP MUST BE CONFIGURED TO ACCEPT DRY CONTACT INPUT FROM THE USMC MNS INTERFACE TO ALERT THE FIRE ALARM PANEL THAT A MNS MESSAGE IS FORTHCOMING. THE FIRE ALARM PANEL MUST BE CONFIGURED SO THAT WHILE THIS INPUT IS ACTIVE (CONTACT CLOSED) THE FIRE ALARM PANEL MUST ROUTE AUDIO PROVIDED BY THE MNS INTERFACE DIRECTLY TO ALL CONNECTED FIRE ALARM SPEAKERS. THE SYSTEM MUST BE PROGRAMMED SO THIS EXTERNAL AUDIO INPUT WILL RECEIVE PRIORITY AND OVERRIDE ALL FIRE ALARM NOTIFICATION SO LONG AS THE INPUT IS ACTIVE. WHEN THE INPUT GOES INACTIVE (CONTACT OPEN) THE EXTERNAL AUDIO ROUTING WILL CEASE AND THE FIRE ALARM PANEL MUST AUTOMATICALLY RETURN TO THE PRIOR NOTIFICATION PROGRAM THAT WAS ACTIVE BEFORE THE MNS MESSAGE. FACP LOCAL MIC HAS PRIORITY OVER ALL ANNOUNCEMENTS. A FACP SUPERVISORY ALARM IS NOT REQUIRED WHEN THE MNS IS ACTIVATED.
4. UTILIZE COMBINATION SPEAKER/STROBE NOTIFICATION DEVICES WHENEVER POSSIBLE. ALL NOTIFICATION DEVICES MUST BE LABELED "ALERT." FIRE MARKINGS ARE NOT USED SINCE THIS IS A COMBINATION FIRE AND VOICE EVACUATION SYSTEM. ALL STROBES UTILIZED MUST BE WHITE/CLEAR (THE USE OF DISPLAY SIGNS ARE NOT AUTHORIZED FOR INSTALLATION/USE AT EGRESS POINTS OF FACILITY).
5. THE FIRE SYSTEM CONTRACTOR IS RESPONSIBLE FOR PROVIDING SPEAKERS FOR EACH FACILITY TO MEET ALL MASS NOTIFICATION SYSTEM INTELLIGIBILITY REQUIREMENTS IN ACCORDANCE WITH UFC 4-021-01 AND 3-600-01. ALL SPEAKERS/STROBES MUST BE LABELED "ALERT". ALL STROBES UTILIZED MUST BE WHITE.
6. PROVIDE GROUNDING FOR THE ANTENNA MAST PER NEC.
7. PROVIDE 1 EMT FROM USMC MNS MOUNTING AREA TO COMMUNICATIONS ROOM. CONDUIT MUST INCLUDE PULLSTRING.
8. PROVIDE A SINGLE REMOTE MICROPHONE PANEL LOCATED IN THE DUTY ROOM OR MAIN ADMINISTRATIVE OFFICE AS REQUIRED BY BUILDING SIZE AND DESIGN. IF A REMOTE MICROPHONE IS UTILIZED THEN A REMOTE MICROPHONE EXTENDER PANEL MAY BE REQUIRED TO ALLOW FOR AN ADDITIONAL MNS AUXILLARY AUDIO INPUT TO THE FACP. THIS IS DEPENDANT ON FACP MODEL.
9. ALL KNOWN BUILDING STRUCTURAL FIRE BARRIER PENETRATIONS MUST BE SEALED WITH FIRE CAULK. IF UNCONFIRMED THEN SEAL STRUCTURAL PENETRATIONS WITH FIRE CAULK. DRESS AND SECURE ALL WIRE, CABLES, AND EQUIPMENT IN A NEAT AND PROFESSIONAL MANNER. ENSURE THE ENCLOSURE AND INSTALLATION AREA IS CLEAN AND FREE OF ANY DEBRIS. CONNECT ALL NEWLY INSTALLED EQUIPMENT/MATERIALS AND TEST FOR PROPER OPERATION. CONDUCT LOCAL/REMOTE DIAGNOSTICS AND LOCAL/REMOTE AUDIO ACTIVATION. INSTALLED COMPONENTS MUST BE PERFORMANCE TESTED BY PHYSICAL SECURITY, NIWC MCESS, BASE FIRE DEPARTMENT, ROICC, AND CONTRACTOR PERSONNEL.
10. REFER QUESTIONS TO NIWC ATLANTIC MNS SME'S, BASE PHYSICAL SECURITY PERSONNEL, MCO 5530.14B-PHYSICAL SECURITY PROGRAM GUIDE, AND UFC 04-021-01 MASS NOTIFICATION SYSTEMS FOR ADDITIONAL MARINE CORPS SPECIFIC GUIDANCE.
11. R.K. BIFF BROWN (843) 218-6292 / (843) 718-4759 ROBERT.K.BROWN1.CTR@US.NAVY.MIL

A1 FIRE ALARM/MASS NOTIFICATION SYSTEM BASE-WIDE INTERFACE

SCALE: NOT TO SCALE

JENSEN HUGHES

SYM	DESCRIPTION	DATE	APPR

NAVFAC

COMMONWEALTH OF VIRGINIA
AARON P FREID
Lic. No. 044409
05.08.2026
PROFESSIONAL ENGINEER
SEAL

mbf architects pa
317-C Pollock Street | New Bern, NC 28560
252.637.6373 | mbfarchitects.com
A/E INFO

APPROVED
FOR COMMANDER NAVFAC 5/13/2026
ACTIVITY

SATISFACTORY TO
DES APF DRW AHE CHK AJW
PM/DM SGL/MDM
BRANCH MANAGER HPN
CHIEF ENG/ARCH JWJ
FIRE PROTECTION HPN

DEPARTMENT OF THE NAVY
NAVAL FACILITIES ENGINEERING SYSTEMS COMMAND
NAVAL FACILITIES ENGINEERING SYSTEMS COMMAND – MIDATLANTIC
MIDLANT DC CORE
NAVAL STATION - NORFOLK, VA
MARINE CORPS BASE
CAMP LEJEUNE, NC
P-1550 SOF MARINE RAIDER BATTALION / COMPANY / TEAM FACILITIES
FIRE ALARM DETAILS

SCALE: AS INDICATED
EPROJECT NO.: 1701820
CONSTR. CONTR. NO.
NAVFAC DRAWING NO. 12903799
SHEET 57 OF 122

A3
CO STG
FA503

FINAL SUBMITTAL
DRAWFORM REVISION: 25 AUGUST 2020

Y:\Shared\FPS\Legacy\VirginiaBeach_2022 Projects\22015 1AJW22015 MBFA - MCAS New River P-1550 SOF Marine Battalion Co Facilities\DWG - Revit 2023\Central Models\BLDG P1550-1701820-A3-F.rvt
File
Print
5/6/2026 2:14:32 PM

FIRE SUPPRESSION GENERAL NOTES:

1. GENERAL SCOPE - PROVIDE WET-PIPE SPRINKLER SYSTEMS THROUGHOUT THE COMPANY STORAGE BUILDING.
2. APPLICABLE CODES:

UFC 3-600-01	FIRE PROTECTION ENGINEERING FOR FACILITIES, 6 MAY 2021
UFC 4-440-01	WAREHOUSES AND STORAGE FACILITIES, 1 APRIL 2019
NFPA 13	INSTALLATION OF SPRINKLER SYSTEMS, 2022
NFPA 24	INSTALLATION OF PRIVATE FIRE SERVICE MAINS AND THEIR APPURTENANCES, 2022

3. THE SYSTEM MUST BE DESIGNED UNDER THE SUPERVISION OF A NICET LEVEL III WATER-BASED SYSTEMS LAYOUT TECHNICIAN AND REVIEWED BY THE QUALIFIED FIRE PROTECTION ENGINEER.
4. SPRINKLER PIPE MUST BE UL LISTED BLACK STEEL, MINIMUM SCHEDULE 40 FOR PIPE DIAMETERS 2-IN AND SMALLER AND A MINIMUM SCHEDULE 10 FOR PIPE DIAMETERS LARGER THAN 2-IN.
5. SPRINKLERS PROVIDED IN FINISHED AREAS MUST BE ORDINARY TEMPERATURE RECESSED.
6. SPRINKLERS PROVIDED IN AREAS WITH EXPOSED CEILINGS MUST BE ORDINARY TEMPERATURE UPRIGHT.
7. SPRINKLERS MUST BE QUICK-RESPONSE.
8. AREAS ARE LIGHT HAZARD UNLESS OTHERWISE INDICATED ON CONTRACT DRAWINGS.
9. PROVIDE A MINIMUM OF SIX SPARE SPRINKLERS WITH AT LEAST TWO SPARE SPRINKLERS OF EACH TYPE AND TEMPERATURE CLASSIFICATION. PROVIDE SPARE SPRINKLER CABINET, WRENCHES, AND POSTED LIST OF ITEMS WITHIN THE CABINET. PROVIDE WITHIN 4-FT OF THE FIRE SPRINKLER RISER.
10. SPRINKLER COVERAGE MUST BE HYDRAULICALLY DESIGNED.
11. SPRINKLER SYSTEM PIPING SUPPORTED FROM THE BUILDING STRUCTURE MUST NOT EXCEED A DIAMETER OF 6-IN.
12. PIPE PENETRATIONS THROUGH FIRE RATED BARRIERS MUST BE PROVIDED WITH UL LISTED FIRESTOP SYSTEMS. SEE SPECIFICATION SECTION 07 84 00 FOR ADDITIONAL REQUIREMENTS.
13. UL CLASSIFICATIONS AND MATERIAL PRODUCT DATA SHEETS FOR FIRESTOPPING SYSTEMS MUST BE SUBMITTED AND APPROVED BEFORE FIRESTOPPING IS PROVIDED. SEE SPECIFICATION SECTION 07 84 00 FOR ADDITIONAL REQUIREMENTS.
14. THESE DRAWINGS DEMONSTRATE THE CONFIGURATION OF MAJOR SYSTEM COMPONENTS. THEY ARE DIAGRAMMATIC IN NATURE AND ARE NOT INTENDED TO SHOW EXACT LOCATIONS. PIPE LENGTHS AND ELEVATIONS INDICATED ON THE DRAWINGS (IF SHOWN) ARE APPROXIMATE. COORDINATE FINAL INSTALLATION WITH ACTUAL FIELD CONDITIONS AND OTHER CONSTRUCTION TRADES. DESIGN THE SPRINKLER SYSTEM TO PROVIDE COMPLETE PROTECTION THROUGHOUT IN ACCORDANCE WITH NFPA 13.

FIRE SUPPRESSION LEGEND

- SPRINKLER PIPE
- OS&Y VALVE
- SUPERVISED CONTROL VALVE
- WATERFLOW SWITCH
- SPRINKLER VALVE TAMPER SWITCH
- SPRINKLER WATER FLOW SWITCH
- (xx) HAZARD CLASSIFICATION

SPRINKLER HAZARD LEGEND

ALL AREAS ARE LIGHT HAZARD UNLESS NOTED OTHERWISE. A MINIMUM DENSITY OF 0.10 GPM/SF WITH A DESIGN AREA OF 1,500 SF AND A HOSE ALLOWANCE OF 250 GPM MUST BE USED. SPRINKLER LAYOUT MUST COMPLY WITH NFPA 13 LIGHT HAZARD SPACING. SPRINKLERS MUST HAVE A MINIMUM K-FACTOR OF 5.6.

(OH) ORDINARY HAZARD. A MINIMUM DENSITY OF 0.20-GPM/SF WITH A DESIGN AREA OF 2,500-SF AND A HOSE ALLOWANCE OF 250 GPM MUST BE USED. SPRINKLER LAYOUT MUST COMPLY WITH NFPA 13 ORDINARY HAZARD SPACING. SPRINKLERS MUST HAVE A MINIMUM K-FACTOR OF 8.0.

(ST) PALLETIZED, SOLID PILE, BIN BOX OR SHELF STORAGE OF CLASS IV COMMODITIES WITH A STORAGE HEIGHT OF 13-FT PROTECTED WITH HIGH TEMPERATURE SPRINKLERS. A MINIMUM DENSITY OF 0.21-GPM/SF WITH A DESIGN AREA OF 2,000-SF AND A HOSE ALLOWANCE OF 500 GPM MUST BE USED (NFPA 13 21.2.2.2.1 & TABLE 21.2.2.2.1). SPRINKLER LAYOUT MUST COMPLY WITH NFPA 13 ORDINARY HAZARD SPACING. SPRINKLERS MUST HAVE A MINIMUM K-FACTOR OF 8.0.

NOTE: NFPA 13 DESIGN AREA REDUCTION FOR QUICK RESPONSE SPRINKLERS IS NOT PERMITTED.

JENSEN HUGHES

SYM	DESCRIPTION	DATE	APPR

NAVFAC

COMMONWEALTH OF VIRGINIA
AARON P FREID
Lic. No. 044409
05.08.2026
PROFESSIONAL ENGINEER
SEAL

mbf architects pa
317-C Pollock Street | New Bern, NC 28560
252.637.6373 | mbfarchitects.com
A/E INFO

APPROVED
FOR COMMANDER NAVFAC 5/13/2026
ACTIVITY
SATISFACTORY TO

DES APF	DRW AHE	CHK AJW	
PM/DM			SGL/MDM
BRANCH MANAGER			HPN
CHIEF ENG/ARCH			JWJ
FIRE PROTECTION			HPN

DEPARTMENT OF THE NAVY
NAVAL FACILITIES ENGINEERING SYSTEMS COMMAND
NAVAL FACILITIES ENGINEERING SYSTEMS COMMAND – MIDATLANTIC
MIDLANT DC CORE
NAVAL STATION - NORFOLK, VA
MARINE CORPS BASE
CAMP LEJEUNE, NC

P-1550 SOF MARINE RAIDER
BATTALION / COMPANY / TEAM FACILITIES

FIRE SUPPRESSION NOTES AND LEGEND - COMPANY STORAGE BUILDING

SCALE: AS INDICATED
EPROJECT NO.: 1701820
CONSTR. CONTR. NO.
NAVFAC DRAWING NO. 12903800
SHEET 58 OF 122
A3
CO STG
FX001
FINAL SUBMITTAL
DRAWFORM REVISION: 25 AUGUST 2020

File Y:\Shared\FPS\Legacy\VirginiaBeach_2022 Projects\22015 1AJW22015 MBFA - MCAS New River P-1550 SOF Marine Battalion Co Facilities\DWG - Revit 2023\Central Models\BLDG P1550-1701820-A3-F.rvt
Print 5/6/2026 2:14:32 PM

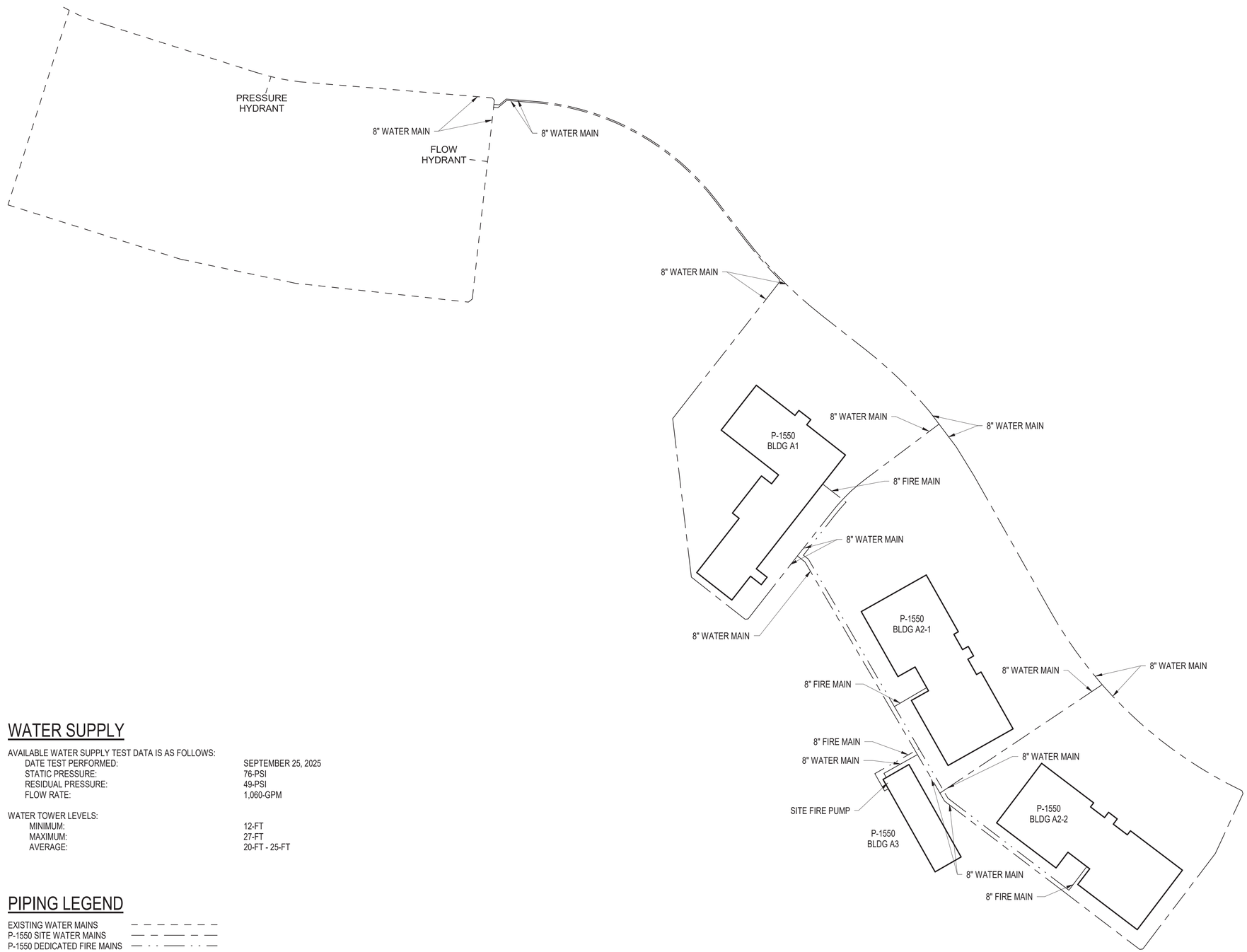

WATER SUPPLY

AVAILABLE WATER SUPPLY TEST DATA IS AS FOLLOWS:

DATE TEST PERFORMED:	SEPTEMBER 25, 2025
STATIC PRESSURE:	76-PSI
RESIDUAL PRESSURE:	49-PSI
FLOW RATE:	1,060-GPM

WATER TOWER LEVELS:

MINIMUM:	12-FT
MAXIMUM:	27-FT
AVERAGE:	20-FT - 25-FT

PIPING LEGEND

EXISTING WATER MAINS
P-1550 SITE WATER MAINS
P-1550 DEDICATED FIRE MAINS

JENSEN HUGHES

A1 HYDRANT FLOW TEST SITE MAP
SCALE: 1" = 125'-0"

N

0 125' 250'

SYM	DESCRIPTION	DATE	APPR

NAVFAC

COMMONWEALTH OF VIRGINIA
AARON P FREID
Lic. No. 044409
05.08.2026
PROFESSIONAL ENGINEER
SEAL

mbf architects pa
317-C Pollock Street | New Bern, NC 28560
252.637.6373 | mbfarchitects.com
A/E INFO

APPROVED
FOR COMMANDER NAVFAC 5/13/2026
ACTIVITY

SATISFACTORY TO

DES APF	DRW AHE	CHK AJW

PM/DM	SGL/MDM
BRANCH MANAGER	HPN
CHIEF ENG/ARCH	JWJ
FIRE PROTECTION	HPN

DEPARTMENT OF THE NAVY
NAVAL FACILITIES ENGINEERING SYSTEMS COMMAND
MIDLANT DC CORE
MARINE CORPS BASE
NAVAL FACILITIES ENGINEERING SYSTEMS COMMAND ~ MIDATLANTIC
NAVAL STATION - NORFOLK, VA
CAMP LEJEUNE, NC
P-1550 SOF MARINE RAIDER
BATTALION / COMPANY / TEAM FACILITIES
FIRE SUPPRESSION SITE MAP

SCALE: AS INDICATED
EPROJECT NO.: 1701820
CONSTR. CONTR. NO.

A3
CO STG
NAVFAC DRAWING NO.
12903801
SHEET 59 OF 122
FX002

FINAL SUBMITTAL
DRAWFORM REVISION: 25 AUGUST 2020

Y:\Shared\FPS\Legacy\VirginiaBeach_2022 Projects\22015 1AJW22015 MBFA - MCAS New River P-1550 SOF Marine Battalion Co Facilities\DWG - Revit 2023\Central Models\BLDG P1550-1701820-A3-F.rvt
File
Print
5/6/2026 2:14:33 PM

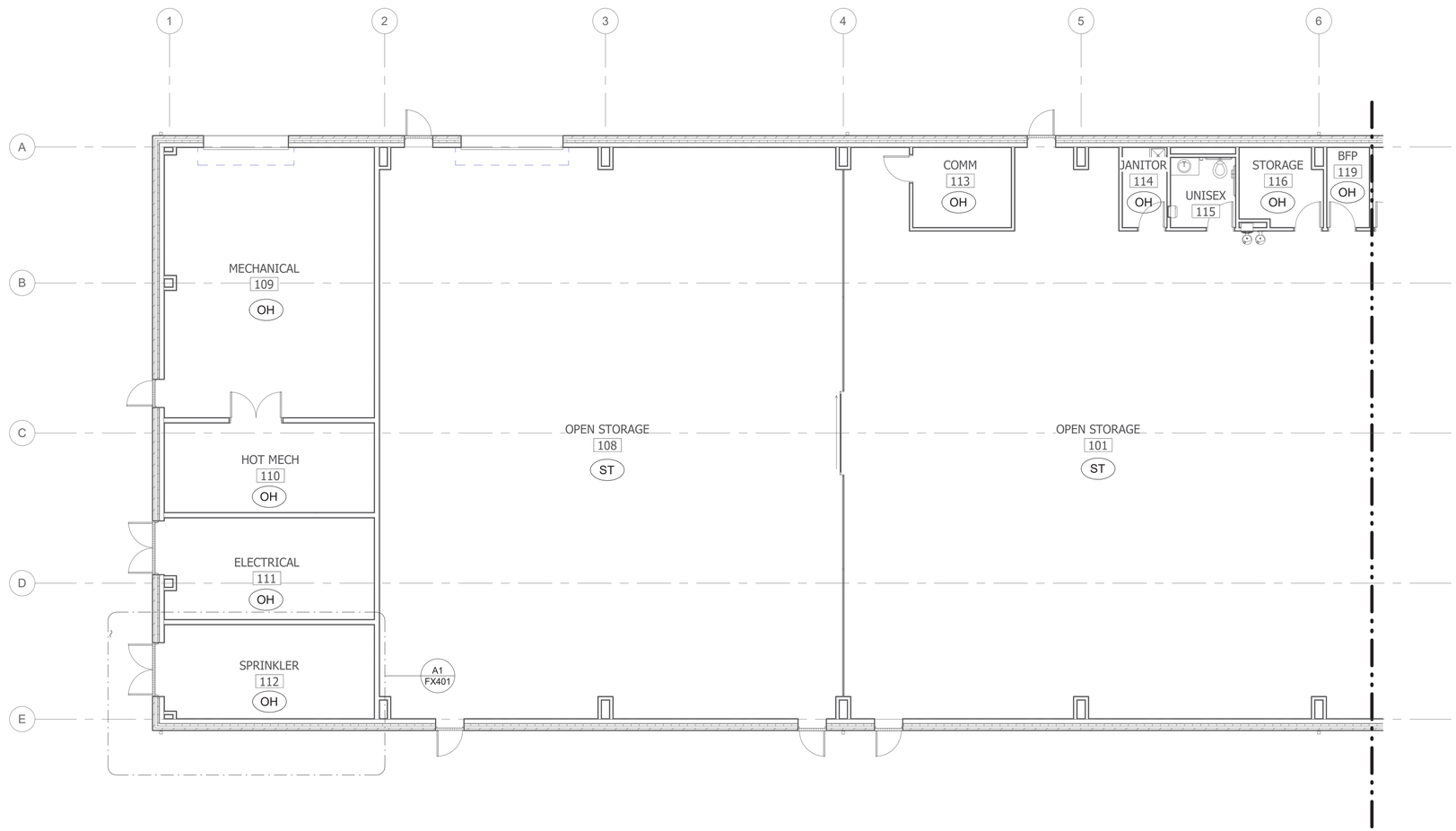

A1 FIRE SPRINKLER FLOOR PLAN - COMPANY STORAGE BUILDING AREA A

SCALE: 1/8" = 1'-0"

A4 KEYPLAN

SCALE: 1" = 40'-0"

GRAPHIC SCALE: 1/8"=1'-0"

8' 0 4' 8' 16'

GRAPHIC SCALE: 1"=40'

40' 0 40' 80'

JENSEN HUGHES

SYM	DESCRIPTION	DATE	APPR

NAVFAC

COMMONWEALTH OF VIRGINIA
AARON P FREID
Lic. No. 044409
05.08.2026
PROFESSIONAL ENGINEER
SEAL

mbf architects pa
317-C Pollock Street | New Bern, NC 28560
252.637.6373 | mbfarchitects.com
A/E INFO

APPROVED
FOR COMMANDER NAVFAC 5/13/2026
ACTIVITY

SATISFACTORY TO

DES APF	DRW AHE	CHK AJW

PM/DM	SGL/MDM
BRANCH MANAGER	HPN
CHIEF ENG/ARCH	JWJ
FIRE PROTECTION	HPN

DEPARTMENT OF THE NAVY
NAVAL FACILITIES ENGINEERING SYSTEMS COMMAND
MIDLANT DC CORE
MARINE CORPS BASE
NAVAL FACILITIES ENGINEERING SYSTEMS COMMAND ~ MIDATLANTIC
NAVAL STATION - NORFOLK, VA
CAMP LEJEUNE, NC

P-1550 SOF MARINE RAIDER
BATTALION / COMPANY / TEAM FACILITIES

FIRE SUPPRESSION FLOOR PLAN - COMPANY STORAGE
BUILDING AREA A

SCALE:	AS INDICATED
EPROJECT NO.:	1701820
CONSTR. CONTR. NO.	

A3
CO STG

NAVFAC DRAWING NO.
12903802
SHEET 60 OF 122
FX101

FINAL SUBMITTAL

DRAWFORM REVISION: 25 AUGUST 2020

File Y:\Shared\FPS\Legacy\VirginiaBeach_2022 Projects\22015 1AJW22015 MBFA - MCAS New River P-1550 SOF Marine Battalion Co Facilities\DWG - Revit 2023\Central Models\BLDG P1550-1701820-A3-F.rvt
Print 5/6/2026 2:14:35 PM

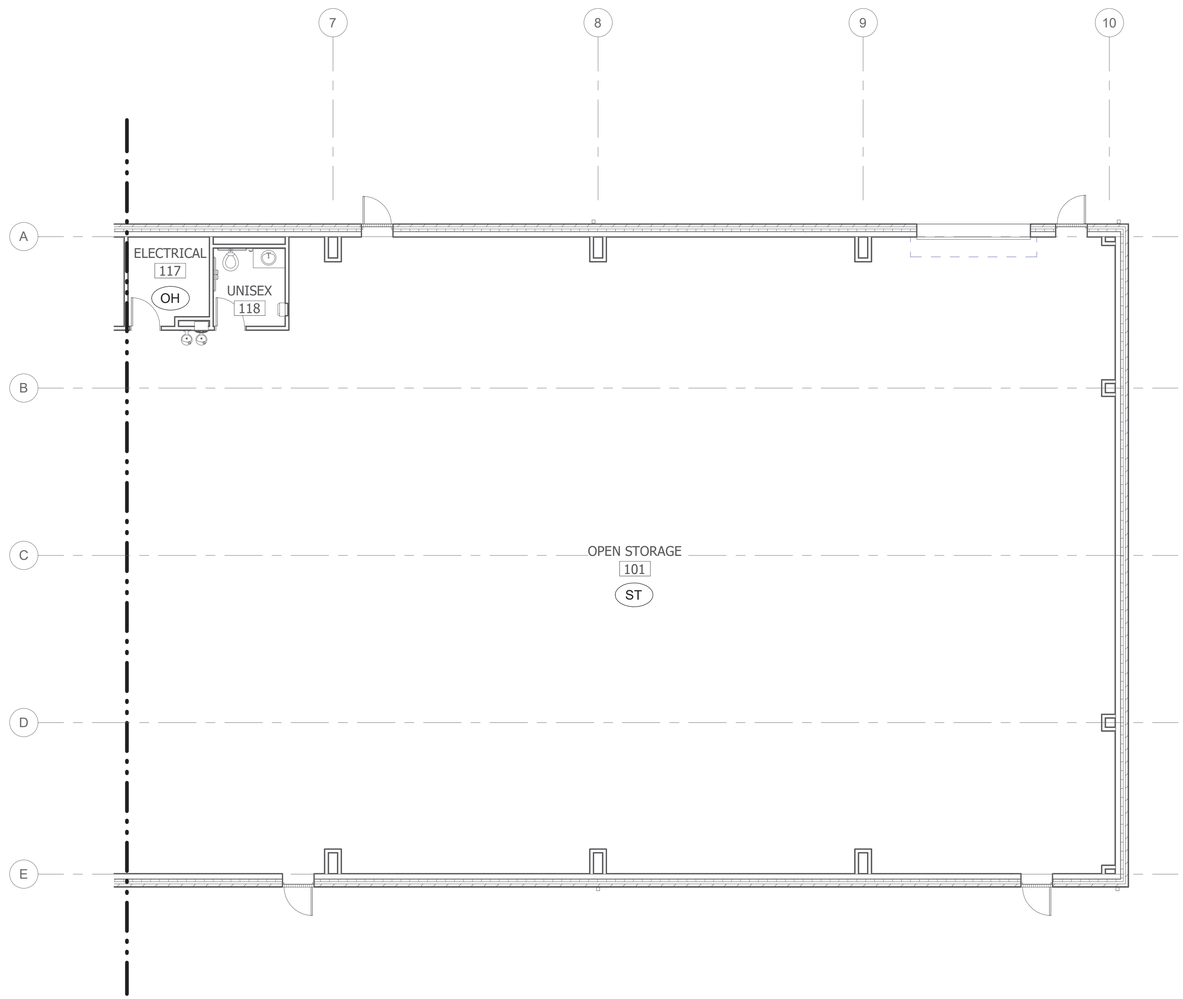

A2 FIRE SPRINKLER FLOOR PLAN - COMPANY STORAGE BUILDING AREA B

SCALE: 1/8" = 1'-0"

A4 KEYPLAN

SCALE: 1" = 40'-0"

GRAPHIC SCALE: 1/8"=1'-0"

8' 0 4' 8' 16'

GRAPHIC SCALE: 1"=40'

40' 0 40' 80'

JENSEN HUGHES

SYM	DESCRIPTION	DATE	APPR

NAVFAC

COMMONWEALTH OF VIRGINIA
AARON P FREID
Lic. No. 044409
05.08.2026
PROFESSIONAL ENGINEER
SEAL

mbf architects pa
317-C Pollock Street | New Bern, NC 28560
252.637.6373 | mbfarchitects.com
A/E INFO

APPROVED
FOR COMMANDER NAVFAC 5/13/2026
ACTIVITY
SATISFACTORY TO

DES APF	DRW AHE	CHK AJW	
PM/DM			SGL/MDM
BRANCH MANAGER			HPN
CHIEF ENG/ARCH			JWJ
FIRE PROTECTION			HPN

DEPARTMENT OF THE NAVY
NAVAL FACILITIES ENGINEERING SYSTEMS COMMAND
MIDLANT DC CORE
MARINE CORPS BASE
NAVAL FACILITIES ENGINEERING SYSTEMS COMMAND ~ MIDATLANTIC
NAVAL STATION - NORFOLK, VA
CAMP LEJEUNE, NC

P-1550 SOF MARINE RAIDER
BATTALION / COMPANY / TEAM FACILITIES

FIRE SUPPRESSION FLOOR PLAN - COMPANY STORAGE
BUILDING AREA B

SCALE: AS INDICATED
EPROJECT NO.: 1701820
CONSTR. CONTR. NO.
NAVFAC DRAWING NO. 12903803
SHEET 61 OF 122

A3
CO STG

FX102

FINAL SUBMITTAL

DRAWFORM REVISION: 25 AUGUST 2020

File Y:\Shared\FPS\Legacy\VirginiaBeach_2022 Projects\22015 1AJW22015 MBFA - MCAS New River P-1550 SOF Marine Battalion Co Facilities\DWG - Revit 2023\Central Models\BLDG P1550-1701820-A3-F.rvt
Print 5/6/2026 2:14:37 PM

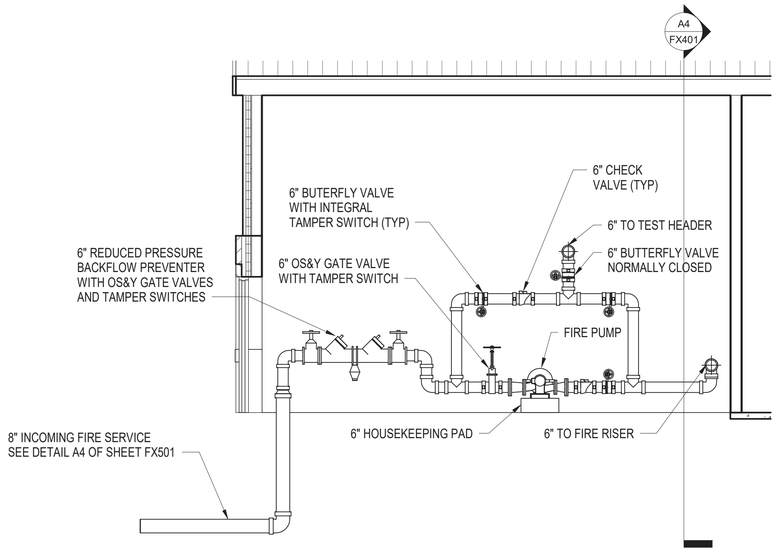

C1 FIRE PUMP SECTION

SCALE: 1/4" = 1'-0"

FIRE PUMP/JOCKEY PUMP SCHEDULE

DESCRIPTION	FLOW RATE	PRESSURE BOOST	START PRESSURE	STOP PRESSURE	HORSEPOWER
FIRE PUMP	750-GPM	40-PSI	123-PSI	108-PSI	25-HP
JOCKEY PUMP	10-GPM	50-PSI	123-PSI	113-PSI	1-HP

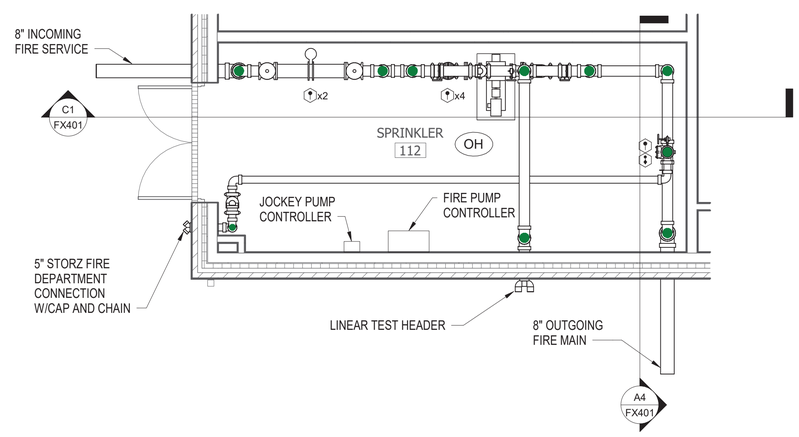

A1 FIRE SUPPRESSION ENLARGED FIRE PUMP ROOM - COMPANY STORAGE BUILDING

SCALE: 1/4" = 1'-0"

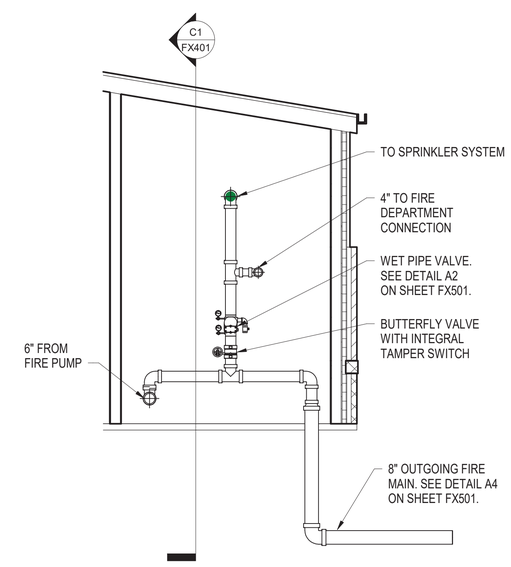

A4 FIRE RISER SECTION

SCALE: 1/4" = 1'-0"

GRAPHIC SCALE: 1/4"=1'-0"

4' 0 2' 4' 8'

JENSEN HUGHES

SYM	DESCRIPTION	DATE	APPR

NAVFAC

COMMONWEALTH OF VIRGINIA
AARON P FREID
Lic. No. 044409
05.08.2026
PROFESSIONAL ENGINEER
SEAL

mbf architects pa
317-C Pollock Street | New Bern, NC 28560
252.637.6373 | mbfarchitects.com
A/E INFO

APPROVED
FOR COMMANDER NAVFAC 5/13/2026
ACTIVITY

SATISFACTORY TO

DES	APF	DRW AHE	CHK AJW
PM/DM			SGL/MDM
BRANCH MANAGER			HPN
CHIEF ENG/ARCH			JWJ
FIRE PROTECTION			HPN

DEPARTMENT OF THE NAVY
NAVAL FACILITIES ENGINEERING SYSTEMS COMMAND
NAVAL FACILITIES ENGINEERING SYSTEMS COMMAND – MIDATLANTIC
MIDLANT DC CORE
NAVAL STATION - NORFOLK, VA
MARINE CORPS BASE
CAMP LEJEUNE, NC

P-1550 SOF MARINE RAIDER
BATTALION / COMPANY / TEAM FACILITIES

FIRE SUPPRESSION ENLARGED FIRE PUMP ROOM - COMPANY STORAGE BUILDING

SCALE: AS INDICATED
EPROJECT NO.: 1701820
CONSTR. CONTR. NO.
NAVFAC DRAWING NO. 12903804
SHEET 62 OF 122

A3
CO STG

FX401

FINAL SUBMITTAL
DRAWFORM REVISION: 25 AUGUST 2020

Y:\Shared\FPS\Legacy\VirginiaBeach_2022 Projects\22015 1AJW22015 MBFA - MCAS New River P-1550 SOF Marine Battalion Co Facilities\DWG - Revit 2023\Central Models\BLDG P1550-1701820-A3-F.rvt
File
Print
5/6/2026 2:14:39 PM

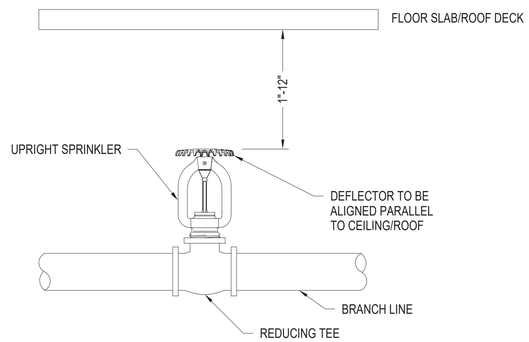

C2 TYPCIAL UPRIGHT SPRINKLER DETAIL

SCALE: NOT TO SCALE

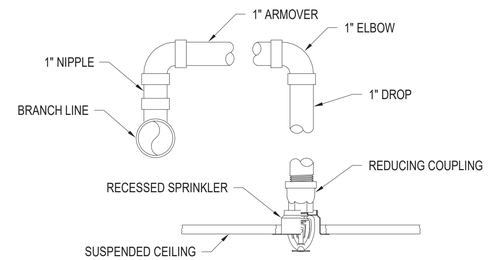

C4 TYPICAL RECESSED SPRINKLER DETAIL

SCALE: NOT TO SCAE

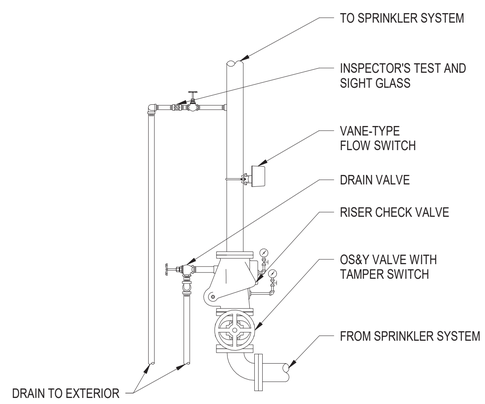

A2 WET PIPE VALVE DETAIL

SCALE: 1/8" = 1'-0"

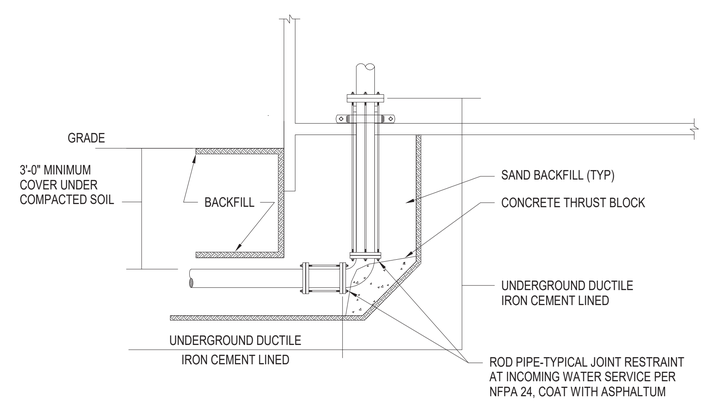

A4 INCOMING/OUTGOING FIRE MAIN DETAIL

SCALE: NOT TO SCALE

JENSEN HUGHES

SYM	DESCRIPTION	DATE	APPR

NAVFAC

COMMONWEALTH OF VIRGINIA
AARON P FREID
Lic. No. 044409
05.08.2026
PROFESSIONAL ENGINEER
SEAL

mbf architects pa
317-C Pollock Street | New Bern, NC 28560
252.637.6373 | mbfarchitects.com
A/E INFO

APPROVED
Michael B. Donahue, P.E.
FOR COMMANDER NAVFAC 5/13/2026
ACTIVITY

SATISFACTORY TO

DES APF	DRW AHE	CHK AJW	
PM/DM			SGL/MDM
BRANCH MANAGER			HPN
CHIEF ENG/ARCH			JWJ
FIRE PROTECTION			HPN

DEPARTMENT OF THE NAVY
NAVAL FACILITIES ENGINEERING SYSTEMS COMMAND
NAVAL FACILITIES ENGINEERING SYSTEMS COMMAND – MIDATLANTIC
MIDLANT DC CORE
NAVAL STATION - NORFOLK, VA
MARINE CORPS BASE
CAMP LEJEUNE, NC
P-1550 SOF MARINE RAIDER BATTALION / COMPANY / TEAM FACILITIES
FIRE SUPPRESSION DETAILS

SCALE: AS INDICATED
EPROJECT NO.: 1701820
CONSTR. CONTR. NO.
NAVFAC DRAWING NO. 12903805
SHEET 63 OF 122

A3
CO STG
FX501

FINAL SUBMITTAL
DRAWFORM REVISION: 25 AUGUST 2020

File Y:\Shared\FPS\Legacy\VirginiaBeach_2022 Projects\22015 1AJW22015 MBFA - MCAS New River P-1550 SOF Marine Battalion Co Facilities\DWG - Revit 2023\Central Models\BLDG P1550-1701820-A3-F.rvt
Print 5/6/2026 2:14:40 PM

WATER CALCULATIONS - BUILDING 'A3'

PRESSURE AVAILABLE

STATIC PRESSURE IN MAIN	=	78	PSI
PRESSURE LOSS THRU BACKFLOW	=	12	PSI
PRESSURE LOSS THRU METER	=	2	PSI
REMAINING PRESSURE AVAILABLE	=	64	PSI
MINIMUM PRESSURE REQUIRED AT LAST FIXTURE	=	35	PSI
STATIC HEAD LOSS (20 FEET x .43)	=	8.66	PSI
AVAILABLE STATIC PRESSURE	=	20.3	PSI
TOTAL DEVELOPED LENGTH (TDL)	=	125	FEET
TOTAL EQUIVALENT LENGTH (TDLx1.25)	=	156	FEET

(20.3 PSI x 100)/ 156 FT = 13 PSI ALLOWABLE LOSS/ 100 FT

PIPE SIZING CHART BASED ON 2 PSI/100 FT LOSS.

NOTE:

WATER PIPE SIZES ARE BASED ON A MINIMUM WORKING PRESSURE OF 78 PSIG AT A FLOW RATE OF 40 GPM AT THE LOCATION WHERE THE MAIN SERVICE ENTERS THE BUILDING. PRESSURE AT SITE BASED ON A SITE PRESSURE OF 78 PSIG BASED ON FIRE PROTECTION HYDRAULIC FLOW DATA.

PLUMBING LEGEND AND ABBREVIATIONS

	SANITARY SEWER PIPING (W)
	VENT PIPING (V)
	COLD WATER PIPING (CW)
	HOT WATER PIPING (HW)
	HOT WATER RETURN PIPING (HWR)
CON	CONDENSATE PIPING (CON)
	TEE TURNS UP
	ELL TURNS UP
	ELL TURNS DOWN
	TEE FROM BELOW
	CHECK VALVE
	BALL VALVE
	GATE VALVE IN HORIZONTAL POSITION
	CLEANOUT IN GROUND (GCO)
	CLEANOUT IN FLOOR OR SLAB (FCO)
	CLEANOUT IN WALL (WCO)
	SHOCK ABSORBER (SA)
P - #	PLUMBING FIXTURE - NO.
A.F.F.	ABOVE FINISH FLOOR
A.S.L	ABOVE SEA LEVEL
FD - X	FLOOR DRAIN - TYPE (SEE SCHEDULE)
H.B.	HOSE BIBB
P.C.	PLUMBING CONTRACTOR
V.T.R.	VENT THROUGH ROOF
CV	COMMON VENT
BOCV	BEGINNING OF CIRCUIT VENT
EOCV	END OF CIRCUIT VENT
RPZ	REDUCED PRESSURE ZONE
HD	HUB DRAIN
WH	WALL HYDRANT

PLUMBING SUMMARY

SYSTEM & MATERIAL	FIXTURE UNITS	MAIN SIZE
WASTE AND VENT SYSTEM		
PVC DWV SCHEDULE 40 IPS SOLID WALL	26.5	4"
DOMESTIC WATER SYSTEM		
BELOW SLAB: TYPE "K" SOFT COPPER WITH NO JOINTS BELOW SLAB ABOVE SLAB: TYPE "L" ANNEALED COPPER WITH 95/5 SOLDER JOINTS.	26.25	2" 63.5 GPM

PROJECT NOTES

1. COORDINATE WITH THE ARCHITECTURAL DRAWINGS FOR EXACT LOCATION OF PLUMBING FIXTURES AND DRAINS.
2. HOSE BIBBS SHALL BE PROTECTED WITH AN APPROVED NON-REMOVABLE TYPE BACKFLOW PROTECTION DEVICE. HOSE BIBBS SHALL BE MOUNTED AT 18" ABOVE FINISH FLOOR UNLESS OTHERWISE NOTED.
3. COORDINATE AND VERIFY SIZES, LOCATIONS, DEPTHS AND PIPING PRESSURES OF ALL BUILDING UTILITIES WITH CIVIL.
4. COORDINATE AND SCHEDULE TIMING FOR UTILITY SERVICE CONNECTION.
5. ALL LINES BELOW SLAB OR GRADE TO BE LOCATED AWAY FROM ALL LOAD BEARING FOOTINGS.
6. ALL VENTS THRU ROOF SHALL BE A MINIMUM OF 18" VERTICAL AND TEN FEET HORIZONTAL AWAY FROM ALL AIR CONDITIONING FRESH AIR INTAKES AND PROVIDED WITH VANDAL PROOF HOODS.
7. COORDINATE ALL EQUIPMENT LOCATIONS, PIPE PENETRATIONS AND EQUIPMENT PAD LOCATIONS WITH STRUCTURAL DRAWINGS PRIOR TO WORK.
8. COORDINATE INSTALLATION OF ALL EQUIPMENT AND PIPING WITH OTHER TRADES PRIOR TO INSTALLATION. ENSURE THAT ALL CONTROL DEVICES, SHUT-OFF VALVES, ETC. ARE ACCESSIBLE FOR MAINTENANCE. WHERE ACCESS PANELS ARE REQUIRED IN FINISHED SPACES, OTHER THAN THAT SHOWN, CONTRACTOR SHALL PROVIDE AND COORDINATE EXACT LOCATION OF PANELS WITH ARCHITECT PRIOR TO INSTALLATION.
9. PERFORM ALL WORK IN ACCORDANCE WITH UFC 3-420-01 PLUMBING SYSTEMS.
10. THE CONTRACTOR IS RESPONSIBLE TO PROVIDE ALL MATERIALS NECESSARY TO COMPLETE SCOPE OF WORK UNLESS OTHERWISE SPECIFIED.
11. INSTALLATION OF PLUMBING PIPING SHALL BE COORDINATED WITH OTHER TRADES TO AVOID CONFLICTS.
12. CONTRACTOR SHALL NOT ORDER EQUIPMENT OR BEGIN FABRICATION OF PARTS PRIOR TO SHOP DRAWING APPROVAL.
13. TEST, BALANCE, STERILIZE AND FLUSH PIPING SYSTEMS. CLEAN ALL EQUIPMENT AND FIXTURES AT THE COMPLETION OF THE PROJECT. KEEP PREMISES CLEAN DURING CONSTRUCTION.
14. PROVIDE ACCESS DOORS/PANELS AT LOCATION OF VALVES AND OTHER COMPONENTS WHERE LOCATED ABOVE HARD CEILINGS OR INSIDE WALLS.
15. ALL SLOPES AND INVERT ELEVATIONS SHALL BE VERIFIED BEFORE ANY PIPING IS INSTALLED IN ORDER TO INSURE THAT PROPER SLOPES ARE MAINTAINED.
16. ALL WATER LINES SHALL HAVE SHUT-OFF VALVES AT CONNECTIONS OF FIXTURES AND EQUIPMENT. PROVIDE DRAIN VALVES AT PIPING LOW POINTS.
17. PIPE PENETRATIONS THROUGH FIRE OR SMOKE PARTITIONS, WALLS, AND/OR FLOORS SHALL BE MADE FIRE AND SMOKE TIGHT. MAINTAIN FIRE RATING OF FLOOR AND WALL ASSEMBLIES IN ACCORDANCE WITH UL SYSTEMS. INSTALL PIPE PENETRATION ASSEMBLIES IN ACCORDANCE WITH UL LISTED MANUFACTURER'S RECOMMENDATIONS. PENETRATIONS SHALL BE IN ACCORDANCE WITH IAW UL THROUGH-WALL DIRECTORY.
18. FIELD VERIFY CONDITIONS BEFORE STARTING CONSTRUCTION AND NOTIFY THE ARCHITECT/ENGINEER OF DISCREPANCIES WITH THE CONSTRUCTION DOCUMENTS AND/OR POTENTIAL PROBLEMS OBSERVED BEFORE COMMENCING WORK IN AFFECTED AREAS.
19. PROVIDE ALL NECESSARY HANGERS FOR SUPPORT OF HORIZONTAL AND VERTICAL PIPING IN ACCORDANCE WITH GOOD PRACTICE AND MANUFACTURER'S RECOMMENDATIONS. PROVIDE SLEEVES AND ESCUTCHEONS FOR ALL PIPING PASSING THROUGH WALLS AND FLOORS.
20. IN GENERAL, ALL PIPING SHALL BE RUN CONCEALED IN SUSPENDED CEILING AND PIPE SPACES PROVIDED UNLESS NOTED OR INDICATED OTHERWISE.
21. DEAD ENDS SHALL BE PROHIBITED IN THE INSTALLATION OF ANY PART OF THE DRAINAGE SYSTEM (EXCEPT FUTURE PROVISIONS).

SYM	DESCRIPTION	DATE	APPR

NAVFAC

NORTH CAROLINA PROFESSIONAL SEAL 033773 ENGINEER DANNY R. CRUSH
6/3/26
SEAL

CRENSHAW CONSULTING Engineers
NC LICENSE #C-1164 www.crenshawconsulting.com 3916 Bush Street, Suite 200 Raleigh, North Carolina 27609 919-871-9370 Fax 871-5620

A/E INFO

APPROVED
DANNY R. CRUSH, P.E.
FOR COMMANDER NAVFAC 5/13/2026
ACTIVITY

SATISFACTORY TO

DES	PRC	DRW	DJG	CHK	DLB
PM/DM					SGL/MDM
BRANCH MANAGER					ALG
CHIEF ENG/ARCH					JWJ
FIRE PROTECTION					HPN

DEPARTMENT OF THE NAVY
NAVAL FACILITIES ENGINEERING SYSTEMS COMMAND
NAVAL FACILITIES ENGINEERING SYSTEMS COMMAND ~ MIDATLANTIC
NAVAL STATION - NORFOLK, VA
MIDLANT DC CORE
MARINE CORPS BASE
CAMP LEJEUNE, NC
P-1550 SOF MARINE RAIDER BATTALION / COMPANY / TEAM FACILITIES
PLUMBING COVER SHEET

SCALE: AS INDICATED
EPROJECT NO.: 1701820
CONSTR. CONTR. NO.

A3
CO STG

NAVFAC DRAWING NO. 12903806
SHEET 64 OF 122
P-001

FINAL SUBMITTAL
DRAWFORM REVISION: 25 AUGUST 2020

File Path: M:\Camp Lejeune\MARSOC SOF Marine Bn HQ_Team (P-1550)\A3 STORAGE
Print Date: 5/6/2026 4:58:51 PM

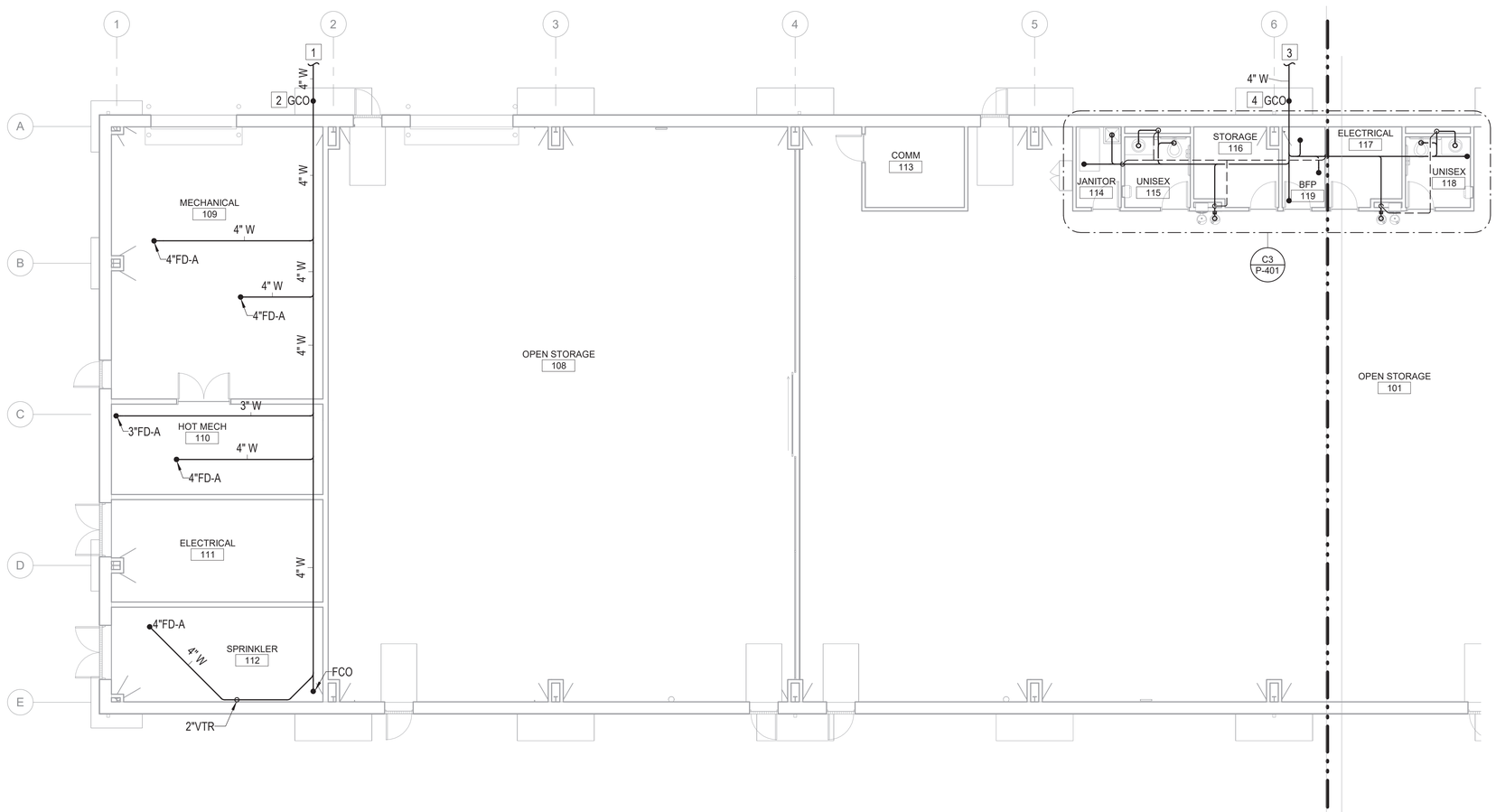

A2 FIRST FLOOR PLAN - AREA A - WASTE AND VENT
1/8" = 1'-0"

#	PLAN NOTES - P-101
1	4"W TO SITE UTILITY. SEE CIVIL SHEET CU106 FOR CONTINUATION OF SANITARY SEWER PIPING.
2	INVERT ELEVATION AT THIS LOCATION IS 24.00' ASL.
3	4"W TO SITE UTILITY. SEE CIVIL SHEET CU108 FOR CONTINUATION OF SANITARY SEWER PIPING.
4	INVERT ELEVATION AT THIS LOCATION IS 24.25' ASL.

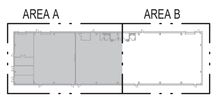

A5 KEY PLAN
1" = 100'-0"

GRAPHIC SCALE: 1/8"=1'-0"
8' 0 4' 8' 16'

GRAPHIC SCALE: 1"=100'
100' 0 50' 100' 150' 200'

SYM	DESCRIPTION	DATE	APPR

NAVFAC

NOTH CAROLINA PROFESSIONAL SEAL 033773 ENGINEER DAVID L. BRUSH
6/1/26
SEAL

CRENSHAW CONSULTING Engineers
NC LICENSE #C-1164 3918 Bush Street, Suite 200 Raleigh, North Carolina 27609 919-871-1070 Fax 871-5620

A/E INFO

APPROVED
Jason E. Donahue, R.A.
FOR COMMANDER NAVFAC 5/15/2026
ACTIVITY

SATISFACTORY TO

DES	PRC	DRW	DJG	CHK	DLB

PM/DM	SGL/MDM
BRANCH MANAGER	ALG
CHIEF ENG/ARCH	JWJ
FIRE PROTECTION	HPN

DEPARTMENT OF THE NAVY
NAVAL FACILITIES ENGINEERING SYSTEMS COMMAND
NAVAL FACILITIES ENGINEERING SYSTEMS COMMAND ~ MIDATLANTIC
MIDLANT DC CORE
NAVAL STATION - NORFOLK, VA
MARINE CORPS BASE
CAMP LEJEUNE, NC

P-1550 SOF MARINE RAIDER
BATTALION / COMPANY / TEAM FACILITIES

FIRST FLOOR PLAN - AREA A - WASTE AND VENT

SCALE: AS INDICATED
EPROJECT NO.: 1701820
CONSTR. CONTR. NO.

NAVFAC DRAWING NO.
12903807
SHEET 65 OF 122

A3
CO STG
P-101

FINAL SUBMITTAL
DRAWFORM REVISION: 25 AUGUST 2020

File Path: M:\Camp Lejeune\MARSOC SOF Marine Bn HQ_Team (P-1550)\A3 STORAGE
Print Date: 5/6/2026 4:58:52 PM

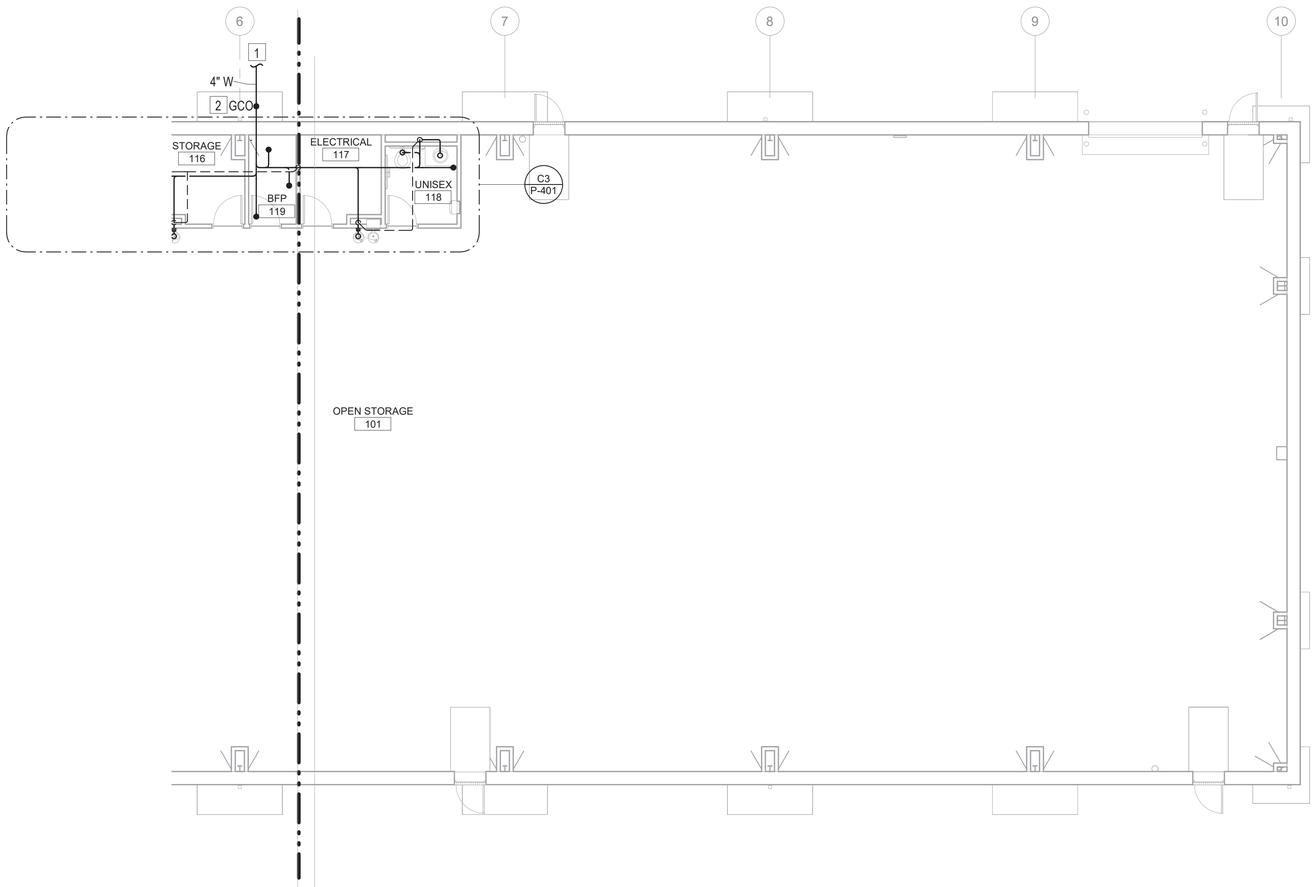

A2 FIRST FLOOR PLAN - AREA B - WASTE AND VENT
1/8" = 1'-0"

#	PLAN NOTES - P-102
1	4"W TO SITE UTILITY. SEE CIVIL SHEET CU108 FOR CONTINUATION OF SANITARY SEWER PIPING.
2	INVERT ELEVATION AT THIS LOCATION IS 24.25' ASL.

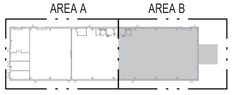

A5 KEY PLAN
1" = 100'-0"

GRAPHIC SCALE: 1/8"=1'-0"
8' 0 4' 8' 16'

GRAPHIC SCALE: 1"=40'
40' 0 40' 80'

SYM	DESCRIPTION	DATE	APPR

NAVFAC

NORTH CAROLINA PROFESSIONAL SEAL 033773 ENGINEER DANNY J. GRUSH
6/1/26
SEAL

CRENSHAW CONSULTING Engineers
www.crenshawconsulting.com
NC LICENSE #C-1164 3916 Bush Street, Suite 200 Raleigh, North Carolina 27609 919-871-9370 Fax 871-5620

A/E INFO

APPROVED
Acting C. Desiree, P.E.
FOR COMMANDER NAVFAC 5/13/2026
ACTIVITY

SATISFACTORY TO

DES	PRC	DRW	DJG	CHK	DLB
PM/DM					SGL/MDM
BRANCH MANAGER					ALG
CHIEF ENG/ARCH					JWJ
FIRE PROTECTION					HPN

DEPARTMENT OF THE NAVY
NAVAL FACILITIES ENGINEERING SYSTEMS COMMAND
MIDLANT DC CORE
NAVAL FACILITIES ENGINEERING SYSTEMS COMMAND ~ MIDATLANTIC
NAVAL STATION - NORFOLK, VA.
MARINE CORPS BASE
CAMP LEJEUNE, NC
P-1550 SOF MARINE RAIDER
BATTALION / COMPANY / TEAM FACILITIES
FIRST FLOOR PLAN - AREA B - WASTE AND VENT

SCALE: AS INDICATED
EPROJECT NO.: 1701820
CONSTR. CONTR. NO.
NAVFAC DRAWING NO. 12903808
SHEET 66 OF 122

A3
CO STG
P-102

FINAL SUBMITTAL
DRAWFORM REVISION: 25 AUGUST 2020

File Path: M:\Camp Lejeune\MARSOC SOF Marine Bn HQ_Team (P-1550)\A3 STORAGE
Print Date: 5/6/2026 4:58:53 PM

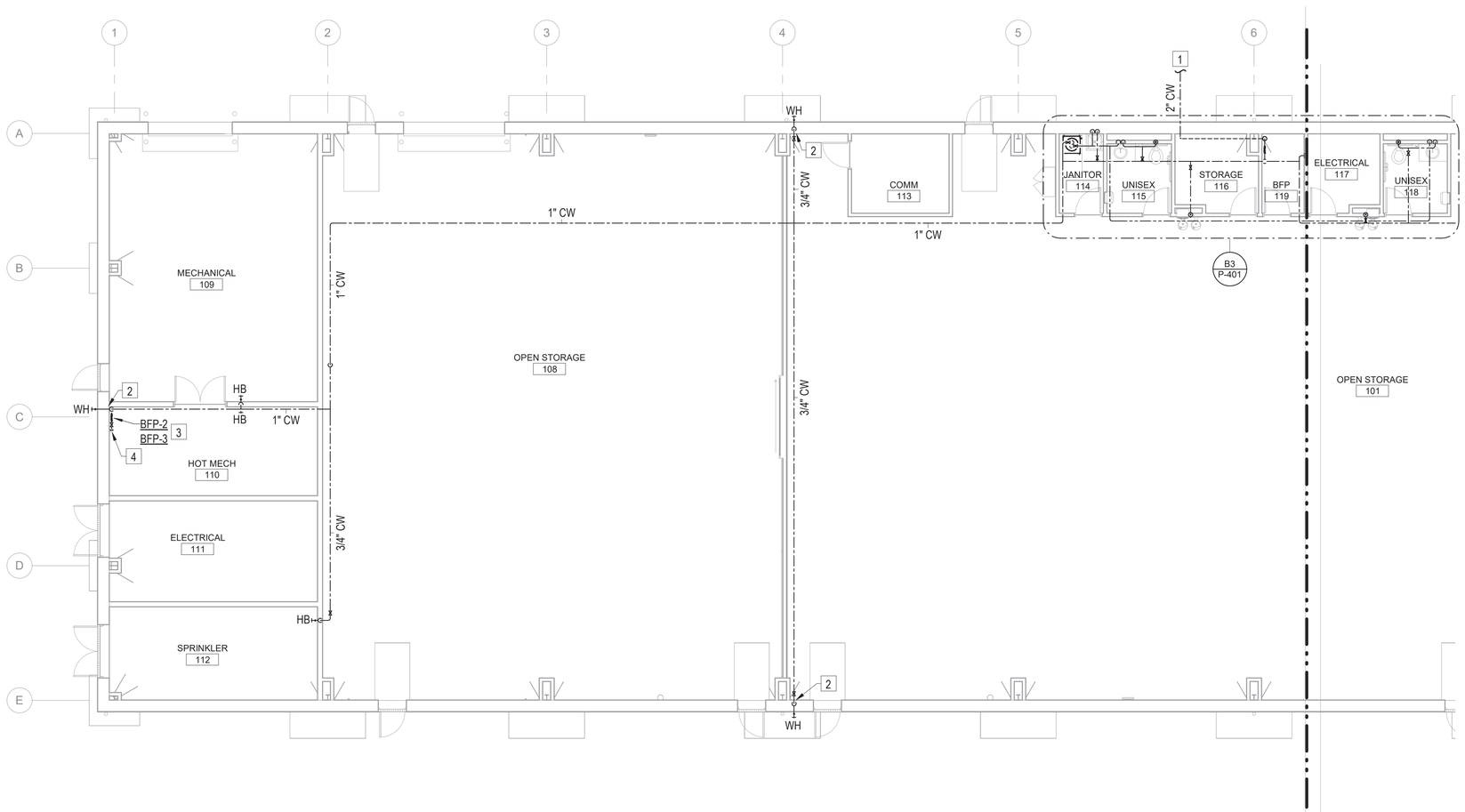

A2 FIRST FLOOR PLAN - AREA A - WATER

1/8" = 1'-0"

#	PLAN NOTES - P-103
1	2"CW TO SITE UTILITY. SEE SITE PLAN FOR CONTINUATION OF DOMESTIC COLD WATER PIPING.
2	DROP 3/4"CW DOWN WALL TO WALL HYDRANT. MOUNT AT 18" AFF.
3	(2) 3/4" RPZ TYPE BACKFLOW PREVENTERS STACKED NEAR WALL FOR HVAC MAKEUP WATER. SEE BACKFLOW PREVENTER DETAIL ON SHEET P-501 FOR MORE INFORMATION.
4	SEE MECHANICAL PLANS FOR CONTINUATION OF HVAC MAKEUP WATER.

A5 KEY PLAN

1" = 100'-0"

GRAPHIC SCALE: 1/8"=1'-0"

8' 0 4' 8' 16'

GRAPHIC SCALE: 1"=40'

40' 0 40' 80'

File Path: M:\Camp Lejeune\MARSOC SOF Marine Bn HQ_Team (P-1550)\A3 STORAGE
Print Date: 5/6/2026 4:58:53 PM

SYM	DESCRIPTION	DATE	APPR

NAVFAC

NORTH CAROLINA PROFESSIONAL SEAL 033773 ENGINEER DAVID L. BRUSH

6/1/26

SEAL

CRENSHAW CONSULTING Engineers

NC LICENSE #C-1164 www.crenshawconsulting.com 3916 Bush Street, Suite 200 Raleigh, North Carolina 27609 919-871-1070 Fax 871-5620

A/E INFO

APPROVED

FOR COMMANDER NAVFAC 5/15/2026

ACTIVITY

SATISFACTORY TO

DES	PRC	DRW	DJG	CHK	DLB

PM/DM	SGL/MDM
BRANCH MANAGER	ALG
CHIEF ENG/ARCH	JWJ
FIRE PROTECTION	HPN

DEPARTMENT OF THE NAVY
NAVAL FACILITIES ENGINEERING SYSTEMS COMMAND
MIDLANT DC CORE
MARINE CORPS BASE

NAVAL FACILITIES ENGINEERING SYSTEMS COMMAND ~ MIDATLANTIC
NAVAL STATION - NORFOLK, VA.
CAMP LEJEUNE, NC

P-1550 SOF MARINE RAIDER BATTALION / COMPANY / TEAM FACILITIES

FIRST FLOOR PLAN - AREA A - WATER

SCALE:	AS INDICATED
EPROJECT NO.:	1701820
CONSTR. CONTR. NO.	
NAVFAC DRAWING NO.	12903809
SHEET	67 OF 122

A3
CO STG

P-103

FINAL SUBMITTAL

DRAWFORM REVISION: 25 AUGUST 2020

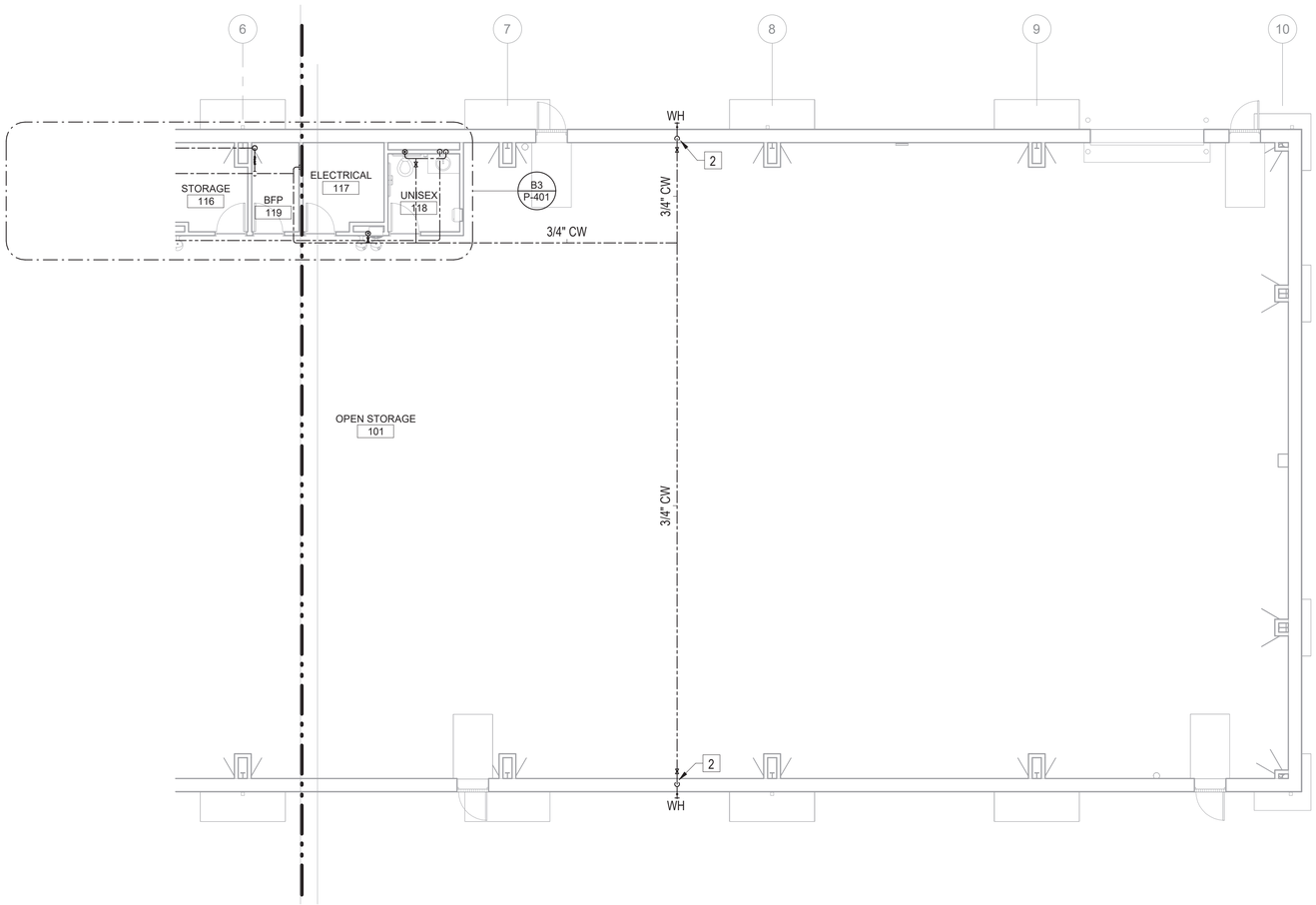

A2 FIRST FLOOR PLAN - AREA B - WATER
1/8" = 1'-0"

#	PLAN NOTES - P-104
1	1-1/2"CW TO SITE UTILITY. SEE CIVIL SHEET CU134 FOR CONTINUATION OF DOMESTIC COLD WATER PIPING.
2	DROP 3/4"CW DOWN WALL TO WALL HYDRANT. MOUNT AT 18" AFF.

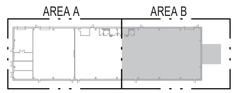

A5 KEY PLAN
1" = 100'-0"

GRAPHIC SCALE: 1/8"=1'-0"
8' 0 4' 8' 16'

GRAPHIC SCALE: 1"=40'
40' 0 40' 80'

SYM	DESCRIPTION	DATE	APPR

NAVFAC

NORTH CAROLINA PROFESSIONAL SEAL 033773 ENGINEER DAVID L. BRUSH
6/1/26
SEAL

CRENSHAW CONSULTING Engineers
NC LICENSE #C-1164
www.crenshawconsulting.com
3916 Bush Street, Suite 200
Raleigh, North Carolina 27609
919-871-9370 Fax 871-5620

A/E INFO

APPROVED
FOR COMMANDER NAVFAC 5/13/2026
ACTIVITY

SATISFACTORY TO

DES	PRC	DRW	DJG	CHK	DLB
PM/DM					SGL/MDM
BRANCH MANAGER					ALG
CHIEF ENG/ARCH					JWJ
FIRE PROTECTION					HPN

DEPARTMENT OF THE NAVY
NAVAL FACILITIES ENGINEERING SYSTEMS COMMAND ~ MIDATLANTIC
MIDLANT DC CORE
MARINE CORPS BASE
NAVAL FACILITIES ENGINEERING SYSTEMS COMMAND ~ MIDATLANTIC
NAVAL STATION - NORFOLK, VA
CAMP LEJEUNE, NC

P-1550 SOF MARINE RAIDER BATTALION / COMPANY / TEAM FACILITIES

FIRST FLOOR PLAN - AREA B - WATER

SCALE: AS INDICATED
EPROJECT NO.: 1701820
CONSTR. CONTR. NO.

A3
CO STG

NAVFAC DRAWING NO.
12903810
SHEET 68 OF 122

P-104

FINAL SUBMITTAL

DRAWFORM REVISION: 25 AUGUST 2020

File Path: M:\Camp Lejeune\MARSOC SOF Marine Bn HQ_Team (P-1550)\A3 STORAGE
Print Date: 5/6/2026 4:58:54 PM

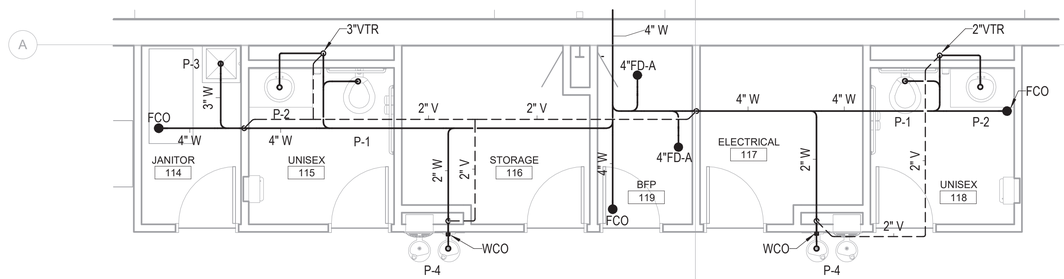

C3 FIRST FLOOR ENLARGED PLAN - WASTE AND VENT

1/4" = 1'-0"

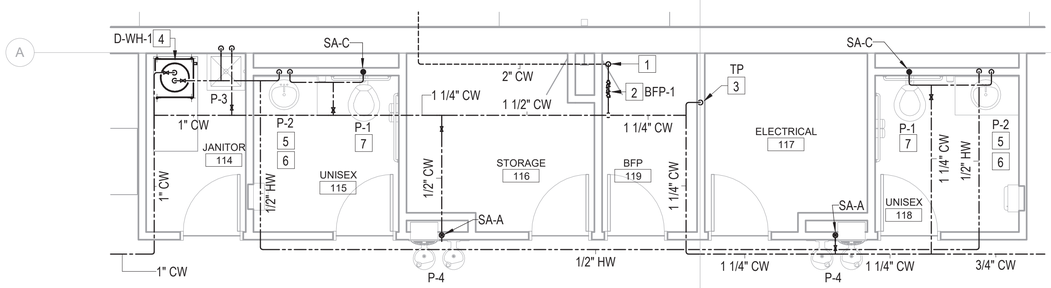

B3 FIRST FLOOR ENLARGED PLAN - WATER

1/4" = 1'-0"

#	PLAN NOTES - P-401
1	TURN 2" DOMESTIC WATER MAIN UP ABOVE SLAB AT THIS LOCATION. PROVIDE MAIN SHUTOFF VALVE IN ACCESSIBLE LOCATION.
2	2" RPZ TYPE BACKFLOW PREVENTER. SEE BACKFLOW PREVENTER DETAIL FOR MORE INFORMATION.
3	DROP 1/2"CW DOWN WALL TO TRAP PRIMER VALVE. ROUTE 1/2"CW BELOW SLAB TO FLOOR DRAIN'S TRAP PRIMER CONNECTIONS.
4	20 GALLON ELECTRIC WATER HEATER (D-WH-1) MOUNT ABOVE IN DRAIN. ROUTE 1" DRAIN LINE OFF OF PAN AND ROUTE TO MOP SINK (INDIRECT). SEE WATER HEATER DETAIL FOR MORE INFORMATION.
5	PROVIDE ASSE 1070 APPROVED THERMOSTATIC MIXING VALVE FOR THIS LAVATORY'S FAUCET.
6	PROVIDE TRANSFORMER FOR THIS SINK'S HARDWIRED FAUCET.
7	PROVIDE TRANSFORMER FOR THIS TOILET'S HARDWIRED FLUSH VALVE.

GRAPHIC SCALE: 1/4"=1'-0"

4' 0 2' 4' 8'

SYM	DESCRIPTION	DATE	APPR

NAVFAC

NORTH CAROLINA PROFESSIONAL SEAL 033773 ENGINEER DAVID L. BRUSH

6/1/26

SEAL

CRENSHAW CONSULTING Engineers

NC LICENSE #C-1164 3916 Bush Street, Suite 200 Raleigh, North Carolina 27609 919-871-9370 Fax 871-5620

A/E INFO

APPROVED

FOR COMMANDER NAVFAC 5/13/2026

ACTIVITY

SATISFACTORY TO

DES	PRC	DRW	DJG	CHK	DLB

PM/DM	SGL/MDM
BRANCH MANAGER	ALG
CHIEF ENG/ARCH	JWJ
FIRE PROTECTION	HPN

DEPARTMENT OF THE NAVY
NAVAL FACILITIES ENGINEERING SYSTEMS COMMAND
MIDLANT DC CORE
MARINE CORPS BASE

NAVAL FACILITIES ENGINEERING SYSTEMS COMMAND ~ MIDATLANTIC
NAVAL STATION - NORFOLK, VA
CAMP LEJEUNE, NC

P-1550 SOF MARINE RAIDER BATTALION / COMPANY / TEAM FACILITIES

ENLARGED PLANS - PLUMBING

SCALE: AS INDICATED

EPROJECT NO.: 1701820

CONSTR. CONTR. NO.

NAVFAC DRAWING NO. 12903811

SHEET 69 OF 122

A3

CO STG

P-401

FINAL SUBMITTAL

DRAWFORM REVISION: 25 AUGUST 2020

File Path: M:\Camp Lejeune\MARSOC SOF Marine Bn HQ_Team (P-1550)\A3 STORAGE
Print Date: 5/6/2026 4:58:55 PM

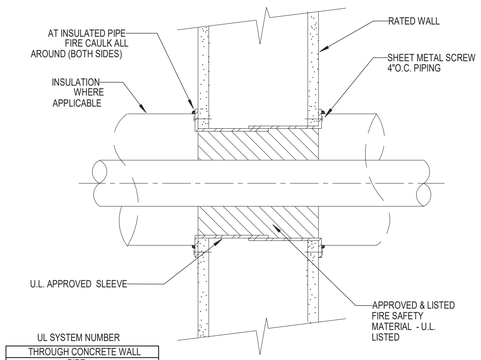

UL SYSTEM NUMBER
THROUGH CONCRETE WALL
PIPE
W-J-1010
THROUGH STUD WALL
PIPE
W-L-5039

C1 PIPE THRU FIRE WALL DETAIL
NTS

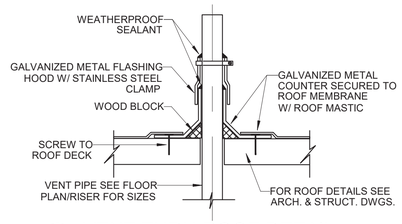

D2 VENT THRU ROOF DETAIL
NTS

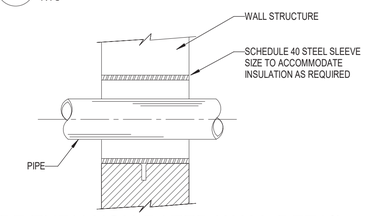

C2 PIPE THRU NON-RATED WALL DETAIL
NTS

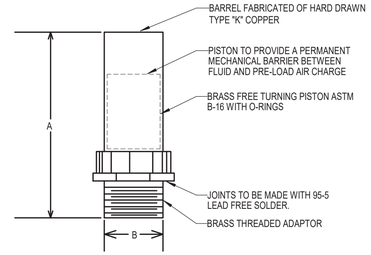

NPT SIZE	P.D.I. SYMBOL	FIXTURE UNIT RATINGS	A SIZE	B SIZE
1/2"	A	1 - 11	5"	1/2"
3/4"	B	12 - 32	5"	3/4"
1"	C	33 - 60	7"	1"
1-1/4"	D	60 - 113	7"	1-1/4"
1-1/2"	E	114 - 154	9"	1-1/2"
2"	F	155 - 330	9"	2"

C3 SHOCK ABSORBER DETAIL
NTS

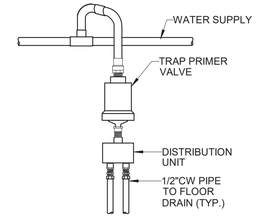

D4 TRAP PRIMER DETAIL
NTS

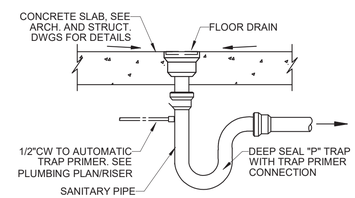

C4 FLOOR DRAIN DETAIL
NTS

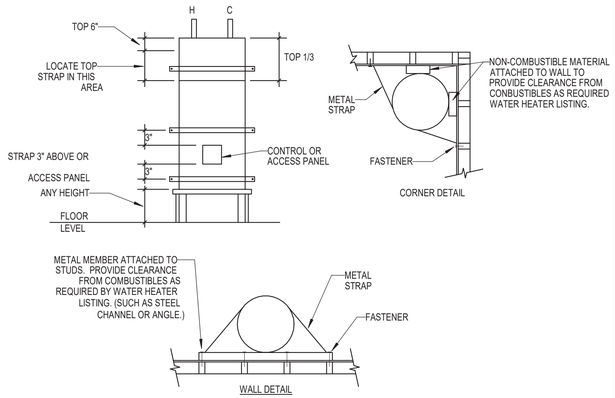

C5 SEISMIC BRACING DETAIL
NTS

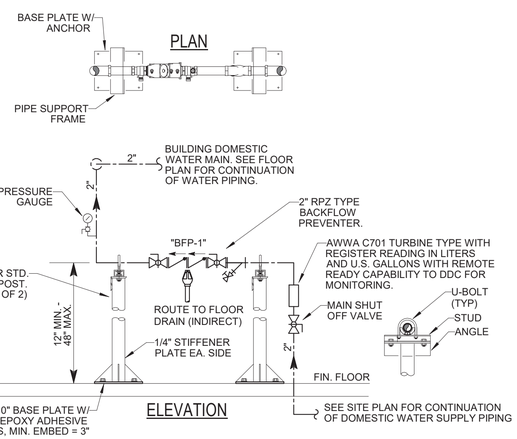

B1 BACKFLOW PREVENTER DETAIL (BFP-1)
NTS

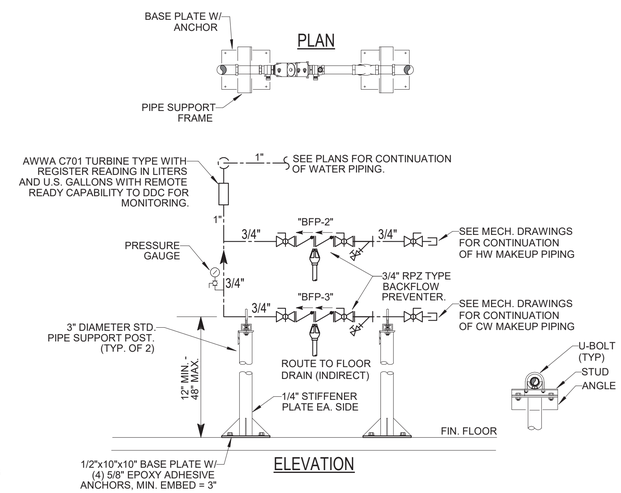

B2 BACKFLOW PREVENTER DETAIL (BFP-2 & BFP-3)
1/8" = 1'-0"

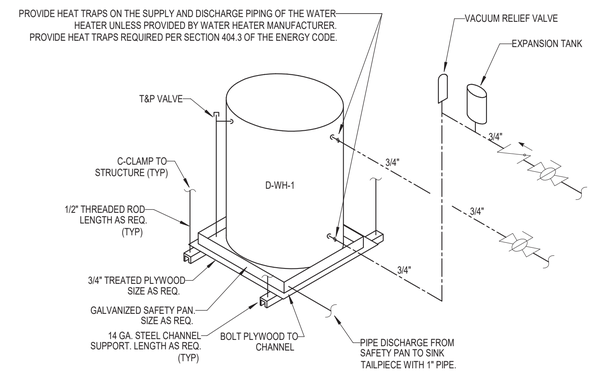

B4 WATER HEATER DETAIL (D-WH-1)
NTS

SYM	DESCRIPTION	DATE	APPR

NAVFAC

SEAL 033773 NORTH CAROLINA PROFESSIONAL ENGINEER DAVID J. BRUSH
6/3/26
SEAL

CRENSHAW CONSULTING Engineers
NC LICENSE #C-1164
3518 Bush Street, Suite 200
Raleigh, North Carolina 27609
919-871-9370 Fax 871-5820

A/E INFO

APPROVED
FOR COMMANDER NAVFAC 5/13/2026
ACTIVITY

SATISFACTORY TO

DES PRC	DRW DJG	CHK DLB	
PM/DM		SGL/MDM	
BRANCH MANAGER		ALG	
CHIEF ENG/ARCH		JWJ	
FIRE PROTECTION		HPN	

DEPARTMENT OF THE NAVY
NAVAL FACILITIES ENGINEERING SYSTEMS COMMAND
MIDLANT DC CORE
MARINE CORPS BASE
NAVAL FACILITIES ENGINEERING SYSTEMS COMMAND ~ MIDATLANTIC
NAVAL STATION - NORFOLK, VA
CAMP LEJEUNE, NC

P-1550 SOF MARINE RAIDER BATTALION / COMPANY / TEAM FACILITIES

PLUMBING DETAILS

SCALE: AS INDICATED
EPROJECT NO.: 1701820
CONSTR. CONTR. NO.

A3
CO STG

NAVFAC DRAWING NO. 12903812
SHEET 70 OF 122
P-501

FINAL SUBMITTAL
DRAWFORM REVISION: 25 AUGUST 2020

File Path: M:\Camp Lejeune\MARSOC SOF Marine Bn HQ_Team (P-1550)\A3 STORAGE
Print Date: 5/6/2026 4:58:55 PM

PLUMBING FIXTURE SCHEDULE

MARK	DESCRIPTION	PIPE SERVICE AND CONN. SIZE			REMARKS
		CW	HW	WASTE	
P-1	WATER CLOSET FLR. MTD. HANDICAPPED	1"	-	4"	SEE SPECIFICATIONS
P-2	LAVATORY INTEGRAL W/ COUNTER HANDICAPPED	1/2"	1/2"	2"	SEE SPECIFICATIONS
P-3	SERVICE SINK	1/2"	1/2"	2"	SEE SPECIFICATIONS
P-4	ELECTRIC WATER COOLER W/ BOTTLE FILLING STATION HANDICAPPED	1/2"	-	2"	SEE SPECIFICATIONS

PLUMBING ACCESSORIES SCHEDULE

MARK	DESCRIPTION	BASIS OF DESIGN FIXTURE SPECIFICATIONS
TP	TRAP PRIMER	PRESSURE DROP ACTIVATED TRAP PRIMER VALVE.
FD-A	FLOOR DRAIN	CAST IRON BODY WITH BOTTOM OUTLET, COMBINATION INVERTIBLE MEMBRANE CLAMP AND ADJUSTABLE COLLAR WITH 7" POLISHED NICKEL BRONZE SQUARE RECESSED STRAINER. PROVIDE DEEP SEAL TRAPS FOR DRAINS.
FCO	FLOOR CLEAN OUT	ADJUSTABLE FLOOR CLEANOUT, COATED CAST IRON BODY WITH GAS AND WATERTIGHT ABS TAPERED THREAD PLUG AND ROUND SCORIATED POLISHED NICKEL BRONZE TOP ADJUSTABLE TO FINISH FLOOR.
GCO	GROUND CLEAN OUT	ADJUSTABLE GROUND CLEANOUT, CAST IRON BODY WITH GAS AND WATERTIGHT ABS TAPERED THREAD PLUG AND ROUND POLISHED NICKEL BRONZE TOP ADJUSTABLE TO FINISHED GRADE.
WCO	WALL CLEAN OUT	WALL CLEANOUT, COATED CAST IRON BODY WITH GAS AND WATERTIGHT ABS TAPERED THREAD PLUG AND ROUND SMOOTH STAINLESS STEEL ACCESS COVER WITH SECURING SCREW.
SA	SHOCK ABSORBER	WATER HAMMER ARRESTOR TO MEET ALL REQUIREMENTS OF ASSE 1010
WH	WALL HYDRANT - KEYED	WALL HYDRANT WITH ANTI-SIPHON VACUUM BREAKER, AND LOOSE TEE KEY OPERATION.

PLUMBING EQUIPMENT SCHEDULE

TAG	TYPE	DESCRIPTION	LOCATION
D-WH-1	DOMESTIC WATER HEATER	20 GALLON ELECTRIC WATER HEATER. 120V / SINGLE PHASE / 2.0 kW INPUT.	ABOVE MOP SINK IN JANITOR 114
BFP-1 (1-1/2")	BACKFLOW PREVENTER RPZ TYPE	THE ASSEMBLY SHALL MEET THE REQUIREMENTS OF ASSE 1013 AND BE PROVIDED TO PREVENT BACKFLOW DUE TO BACKSIPHONAGE AND/OR BACKPRESSURE.	BFP 119
BFP-2 (3/4")	BACKFLOW PREVENTER RPZ TYPE (HW MAKEUP)	THE ASSEMBLY SHALL MEET THE REQUIREMENTS OF ASSE 1013 AND BE PROVIDED TO PREVENT BACKFLOW DUE TO BACKSIPHONAGE AND/OR BACKPRESSURE.	HOT MECH 110
BFP-3 (3/4")	BACKFLOW PREVENTER RPZ TYPE (CW MAKEUP)	THE ASSEMBLY SHALL MEET THE REQUIREMENTS OF ASSE 1013 AND BE PROVIDED TO PREVENT BACKFLOW DUE TO BACKSIPHONAGE AND/OR BACKPRESSURE.	HOT MECH 110
ET-1	EXPANSION TANK	2 GALLON CAPACITY, 1.27 GALLON ACCEPTANCE VOLUME, MAXIMUM WORKING PRESSURE OF 40 PSI AND MAXIMUM TEMPERATURE OF 180° F.	ABOVE MOP SINK IN JANITOR 114

SYM	DESCRIPTION	DATE	APPR

NAVFAC

NORTH CAROLINA PROFESSIONAL SEAL 033773 ENGINEER DAVID L. BRUSH

6/3/20

SEAL

CRENSHAW CONSULTING Engineers
www.crenshawconsulting.com
NC LICENSE #C-1164 3918 Bush Street, Suite 200
Raleigh, North Carolina 27609
919-871-9370 Fax 871-5620

A/E INFO

APPROVED
DIGITALLY SIGNED BY
FOR COMMANDER NAVFAC 5/13/2026
ACTIVITY

SATISFACTORY TO

DES PRC	DRW DJG	CHK DLB	
PM/DM			SGL/MDM
BRANCH MANAGER			ALG
CHIEF ENG/ARCH			JWJ
FIRE PROTECTION			HPN

DEPARTMENT OF THE NAVY
NAVAL FACILITIES ENGINEERING SYSTEMS COMMAND
MIDLANT DC CORE
MARINE CORPS BASE
NAVAL FACILITIES ENGINEERING SYSTEMS COMMAND ~ MIDATLANTIC
NAVAL STATION - NORFOLK, VA.
CAMP LEJEUNE, NC

P-1550 SOF MARINE RAIDER BATTALION / COMPANY / TEAM FACILITIES

PLUMBING SCHEDULES

SCALE: AS INDICATED
EPROJECT NO.: 1701820
CONSTR. CONTR. NO.

NAVFAC DRAWING NO. 12903813
SHEET 71 OF 122
P-601

A3
CO STG

FINAL SUBMITTAL

DRAWFORM REVISION: 25 AUGUST 2020

File Path: M:\Camp Lejeune\MARSOC SOF Marine Bn HQ_Team (P-1550)\A3 STORAGE
Print Date: 5/6/2026 4:58:56 PM

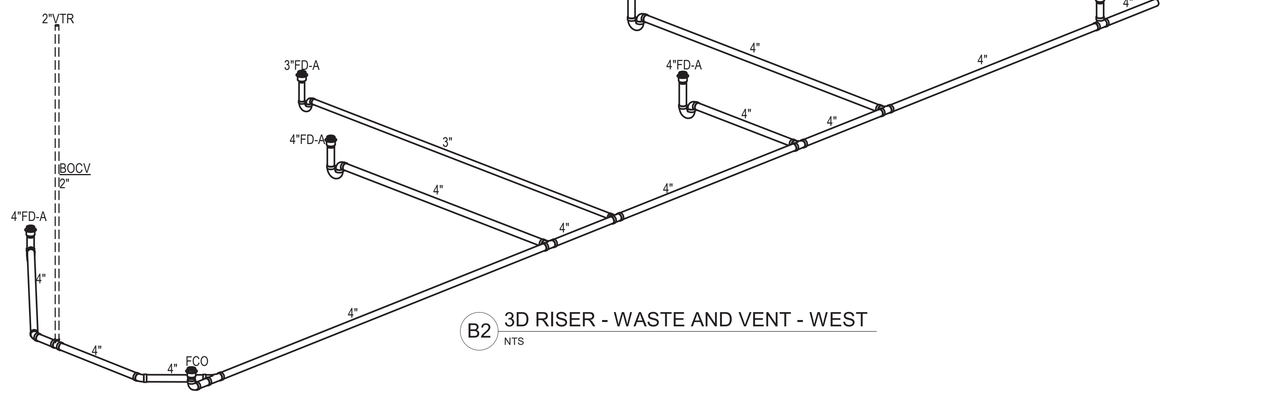

B2 3D RISER - WASTE AND VENT - WEST
NTS

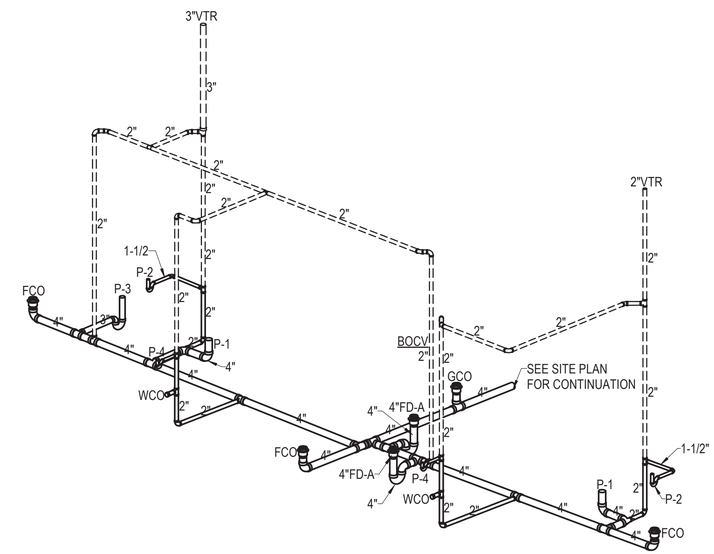

B4 3D RISER - WASTE AND WENT - EAST
NTS

SYM	DESCRIPTION	DATE	APPR

NAVFAC

NOTHING FOLLOWS THIS PROFESSIONAL SEAL 033773 ENGINEER DAVID L. BRUSH
6/3/26
SEAL

CRENSHAW CONSULTING Engineers
NC LICENSE #C-1164
www.crenshawconsulting.com
3516 Bush Street, Suite 200
Raleigh, North Carolina 27609
919-871-9370 Fax 871-5620

A/E INFO

APPROVED
FOR COMMANDER NAVFAC 5/13/2026
ACTIVITY

SATISFACTORY TO

DES	PRC	DRW	DJG	CHK	DLB
PM/DM					SGL/MDM
BRANCH MANAGER					ALG
CHIEF ENG/ARCH					JWJ
FIRE PROTECTION					HPN

DEPARTMENT OF THE NAVY
NAVAL FACILITIES ENGINEERING SYSTEMS COMMAND
MIDLANT DC CORE
MARINE CORPS BASE
NAVAL FACILITIES ENGINEERING SYSTEMS COMMAND ~ MIDATLANTIC
NAVAL STATION - NORFOLK, VA
CAMP LEJEUNE, NC

P-1550 SOF MARINE RAIDER BATTALION / COMPANY / TEAM FACILITIES

RISER DIAGRAM - WASTE AND VENT

SCALE: AS INDICATED
EPROJECT NO.: 1701820
CONSTR. CONTR. NO.

NAVFAC DRAWING NO. 12903814
SHEET 72 OF 122

A3
CO STG

P-701

FINAL SUBMITTAL
DRAWFORM REVISION: 25 AUGUST 2020

File Path: M:\Camp Lejeune\MARSOC SOF Marine Bn HQ_Team (P-1550)\A3 STORAGE
Print Date: 5/6/2026 4:58:56 PM

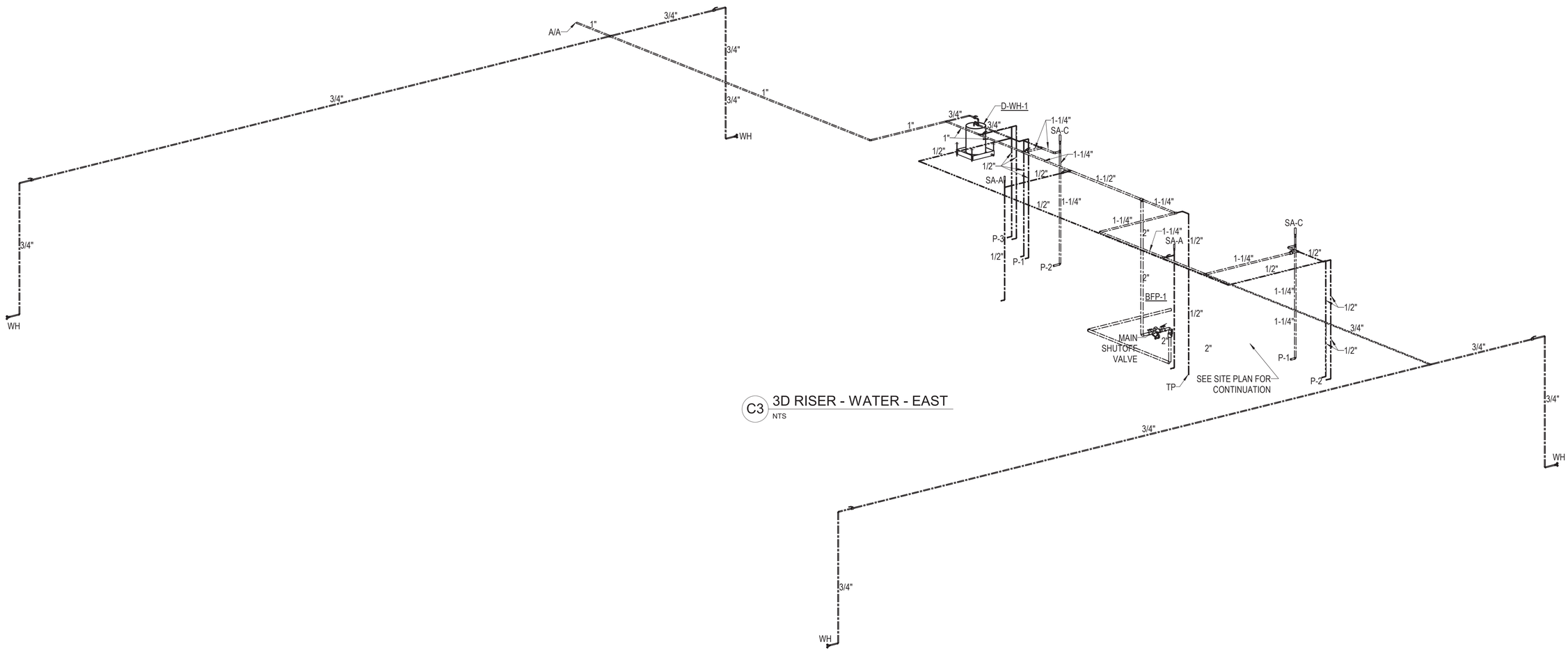

C3 3D RISER - WATER - EAST
NTS

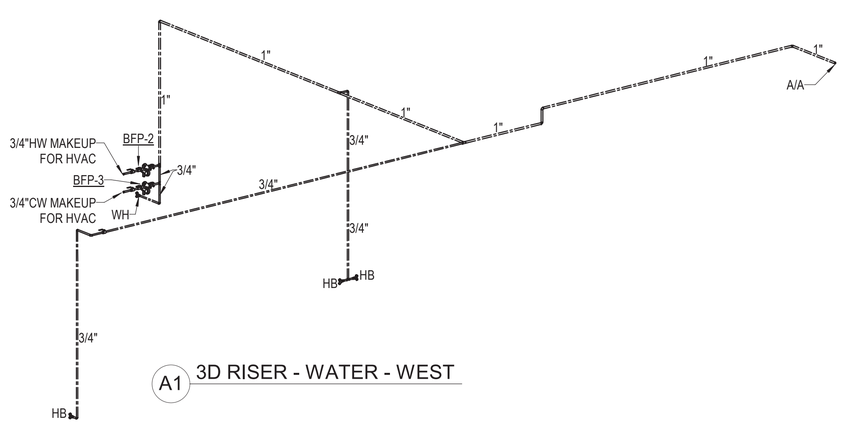

A1 3D RISER - WATER - WEST

SYM	DESCRIPTION	DATE	APPR

NAVFAC

NATIONAL ARCHITECTURAL PROFESSIONAL ENGINEER SEAL 033773 DAVID R. BRUSH
6/3/26
SEAL

CRENSHAW CONSULTING Engineers
NC LICENSE #C-1164
www.crenshawconsulting.com
3916 Bush Street, Suite 200
Raleigh, North Carolina 27609
919-871-9370 Fax 871-5620

A/E INFO

APPROVED
DAVID R. BRUSH
FOR COMMANDER NAVFAC 5/13/2026

ACTIVITY

SATISFACTORY TO

DES	PRC	DRW	DJG	CHK	DLB
PM/DM					SGL/MDM
BRANCH MANAGER					ALG
CHIEF ENG/ARCH					JWJ
FIRE PROTECTION					HPN

DEPARTMENT OF THE NAVY
NAVAL FACILITIES ENGINEERING SYSTEMS COMMAND ~ MIDATLANTIC
MIDLANT DC CORE
MARINE CORPS BASE
NAVAL FACILITIES ENGINEERING SYSTEMS COMMAND
NAVAL STATION - NORFOLK, VA
CAMP LEJEUNE, NC

P-1550 SOF MARINE RAIDER BATTALION / COMPANY / TEAM FACILITIES

RISER DIAGRAM - WATER

SCALE: AS INDICATED
EPROJECT NO.: 1701820
CONSTR. CONTR. NO.

NAVFAC DRAWING NO.
12903815

A3
CO STG

SHEET 73 OF 122

P-702

FINAL SUBMITTAL

DRAWFORM REVISION: 25 AUGUST 2020

File Path: M:\Camp Lejeune\MARSOC SOF Marine Bn HQ_Team (P-1550)\A3 STORAGE
Print Date: 5/6/2026 4:58:56 PM

MECHANICAL NOTES

GENERAL REQUIREMENTS

1. THE CONTRACTOR MUST PROVIDE ALL SPECIFIED AND MISCELLANEOUS MATERIAL AND LABOR AS REQUIRED FOR A COMPLETE AND OPERATING SYSTEM AS DESCRIBED BY THE CONTRACT DOCUMENTS.
2. ALL EQUIPMENT AND MATERIALS MUST BE INSTALLED IN ACCORDANCE WITH ALL APPLICABLE CODES AND RECOMMENDATIONS OF THE MANUFACTURERS. IF THERE IS A CONFLICT IN THE ABOVE REQUIREMENTS, THE MORE STRINGENT MUST BE USED.
3. ALL DUCTWORK AND EQUIPMENT SHOWN ON THESE DRAWINGS IS STRICTLY DIAGRAMMATIC. ALL DUCTWORK SIZES SHOWN ARE FREE AREA SIZES. FIELD VERIFY DIMENSIONS AND CONDITIONS BEFORE COMMENCING WORK. IF A CONFLICT IS IDENTIFIED, REPORT IT TO THE CONTRACTING OFFICER BEFORE PROCEEDING.
4. ALL SHEET-METAL DUCTWORK MUST BE CONSTRUCTED OF GALVANIZED STEEL SHEETS IN ACCORDANCE WITH SMACNA GAGES AND STANDARDS AND SEALED TO SMACNA CLASSIFICATION "A".
5. PRIOR TO CONSTRUCTION, THE CONTRACTOR MUST COORDINATE HIS WORK BETWEEN ALL TRADES. ALL DRAWINGS INDICATE THE GENERAL ARRANGEMENT DESIRED. THE EXACT LOCATIONS AND DETAILS OF CONSTRUCTION MAY BE SUCH THAT VARIANCES ARE REQUIRED. THE DRAWINGS DO NOT SHOW ALL BENDS, OFFSETS, AND FITTINGS THAT MAY BE REQUIRED FOR THE COMPLETE EXECUTION OF THIS CONTRACT. SUCH VARIANCES AND CONTINGENCIES MUST BE ALLOWED FOR IN THE CONTRACTOR'S BID AND MUST BE ACCOMPLISHED WITHOUT ADDITIONAL COST TO THE GOVERNMENT. PRIOR TO ORDERING EQUIPMENT, THE CONTRACTOR MUST PREPARE COORDINATION DRAWINGS SHOWING HOW ALL EQUIPMENT IS TO BE LOCATED IN THE SPACE INDICATED. THIS DRAWING MUST SHOW THE NEW AND EXISTING WORK OF ALL TRADES.
6. DO NOT SCALE THESE DRAWINGS. REFER TO THE ARCHITECTURAL PLANS FOR DIMENSIONS.
7. ALL EQUIPMENT MUST BE LOCATED AND INSTALLED TO PROVIDE MAXIMUM SPACE FOR MAINTENANCE AND SERVICE, PER EQUIPMENT MANUFACTURERS RECOMMENDATIONS.
8. ALL MATERIALS USED MUST BE NEW AND FREE OF DEFECTS. ALL MATERIALS AND EQUIPMENT MUST BEAR THE UL LABEL OR EQUIVALENT WHERE APPLICABLE.
9. COORDINATE EXACT LOCATION OF ALL DIFFUSERS WITH LIGHTS, SPRINKLER HEADS, AND OTHER CEILING MOUNTED DEVICES. SEE THE REFLECTED CEILING PLAN.
10. THE CONTRACTOR MUST, AT THE COMPLETION OF THE WORK, CLEAN, POLISH, AND/OR WASH ALL EXPOSED ITEMS OF MATERIALS, EQUIPMENT, AND FIXTURES IN HIS CONTRACT TO LEAVE SUCH ITEMS BRIGHT AND CLEAN. THE CONTRACTOR MUST KEEP THE PREMISES CLEAR OF DEBRIS FROM HIS WORK DURING CONSTRUCTION AND LEAVE THE AREA AND BUILDING CLEAN AT COMPLETION OF THE CONTRACT.
11. MECHANICAL AND ELECTRICAL EQUIPMENT MUST OPERATE WITHOUT OBJECTIONABLE NOISE OR VIBRATION, AS DETERMINED BY THE CONTRACTING OFFICER. IF SUCH OBJECTIONABLE NOISE OR VIBRATION SHOULD BE PRODUCED AND TRANSMITTED TO OCCUPIED PORTIONS OF THE BUILDING, THE CONTRACTOR MUST MAKE THE NECESSARY CHANGES TO CORRECT THE NOISE OR VIBRATION WITHOUT ADDITIONAL COST TO THE GOVERNMENT.
12. VENTILATION AIR INTAKES MUST BE LOCATED A MINIMUM OF 10 FEET ABOVE THE GROUND AND 10 FEET FROM ALL EXHAUST DISCHARGE AND PLUMBING VENTS.
13. REPLACE ALL FILTERS JUST PRIOR TO ACCEPTANCE BY THE OFFICER IN CHARGE OF CONSTRUCTION.
14. ROUTE REFRIGERANT PIPING ABOVE THE DROP CEILING IN THE MOST DIRECT PATH POSSIBLE. INSULATE PER SPECIFICATIONS. PROVIDE LONG LINE REFRIGERATION KIT AS REQUIRED.
15. PROVIDE AN AUXILIARY DRAIN PAN FOR ANY AIR CONDITIONING EQUIPMENT LOCATED ABOVE A CEILING OR WHERE CONDENSATE OVERFLOW WOULD DAMAGE BUILDING COMPONENTS. THE AUXILIARY DRAIN PAN MUST BE PROVIDED WITH A FLOAT SWITCH THAT STOPS THE FAN UPON ACCUMULATION OF CONDENSATE IN THE PAN. LOCATE ALL EQUIPMENT ABOVE THE CEILING SO THAT ADEQUATE SLOPE IS PROVIDED FOR ALL DRAIN LINES. IF A CONDENSATE PUMP IS SPECIFIED, EXTEND THE AUXILIARY DRAIN PAN UNDER THE CONDENSATE PUMP. CONDENSATE DRAIN LINES MUST BE MADE OF TYPE 'K' COPPER PIPE. INSULATE DRAIN LINES TO PREVENT SWEATING. ROUTE CONDENSATE DRAINS TO NEAREST ROOF/FLOOR DRAIN, OR AS DIRECTED ON PLANS.
16. ALL MECHANICAL CONTROL WIRING MUST BE INSTALLED IN CONDUIT.
17. LOCATE TEMPERATURE/HUMIDITY SENSORS AS INDICATED ON THE PLANS.

ABBREVIATIONS

AFC	ABOVE FINISHED CEILING
AFF	ABOVE FINISHED FLOOR
BAS	BUILDING AUTOMATION SYSTEM
BTUH	BRITISH THERMAL UNIT PER HOUR
CFM	CUBIC FEET PER MINUTE
COND	CONDENSATE
CV	FLOW COEFFICIENT
CHWS	CHILLED WATER SUPPLY
CHWR	CHILLED WATER RETURN
DB	DRY BULB
DP	DEW POINT
EAT	ENTERING AIR TEMPERATURE
EA	EXHAUST AIR
ESP	EXTERNAL STATIC PRESSURE
EWT	ENTERING WATER TEMPERATURE
EX	EXISTING
F	FAHRENHEIT
FD	FLOOR DRAIN
FT	FEET
FLA	FULL LOAD AMPS
FPM	FEET PER MINUTE
GPM	GALLONS PER MINUTE
HP	HORSEPOWER
HSPF	HEATING SEASONAL PERFORMANCE FACTOR
HWS	HOT WATER SUPPLY
HWR	HOT WATER RETURN
HZ	HERTZ
KW	TOTAL POWER INPUT, KILOWATTS
LWT	LEAVING WATER TEMPERATURE
LAT	LEAVING AIR TEMPERATURE
LBS	POUNDS
MBH	MILLIONS BTU PER HOUR
MCA	MINIMUM CIRCUIT AMPS
MOCP	MAXIMUM OVER CURRENT PROTECTION
OA	OUTSIDE AIR
PH	PHASE
PD	PRESSURE DROP
P/T	PRESSURE/TEMPERATURE
PSI	POUNDS PER SQUARE INCH
RA	RETURN AIR
RL	REFRIGERANT LIQUID
RS	REFRIGERANT SUCTION
RPM	REVOLUTIONS PER MINUTE
SA	SUPPLY AIR
SEER	SEASONAL ENERGY EFFICIENCY RATIO
SF	SQUARE FEET
SHR	SENSIBLE HEAT RATIO
SP	STATIC PRESSURE
STM	STEAM
TYP	TYPICAL
WB	WET BULB
WC	WATER COLUMN
WPD	WATER PRESSURE DROP
VFD	VARIABLE FREQUENCY DRIVE

DRAWING LEGEND

	CEILING SUPPLY DIFFUSER
	CEILING RETURN GRILLE
	CEILING EXHAUST GRILLE
WXH	RECTANGULAR DUCT (W = WIDTH, H = HEIGHT)
D"Ø	ROUND DUCT (D = DIAMETER)
	45° EXPANDED THROAT TAKEOFF WITH MANUAL VOLUME DAMPER
	MANUAL VOLUME DAMPER
	RECTANGULAR DUCT TURNS DOWN
	RECTANGULAR DUCT TURNS UP
	ROUND DUCT TURNS DOWN
	ROUND DUCT TURNS UP
E	HVAC SYSTEM EMERGENCY SHUTDOWN SWITCH
SD	DUCT MOUNTED SMOKE DETECTOR
A / 150	DIFFUSER TAG — DIFFUSER TYPE / CFM
	CABLE TRAY

	GATE VALVE
	BALL VALVE
	SWING CHECK VALVE
	BALANCING VALVE
	TWO WAY CONTROL VALVE
	THREE WAY CONTROL VALVE
	STRAINER WITH BLOW OFF VALVE
FS	FLOW SWITCH
TT	TEMPERATURE TRANSMITTER
PT/PS	PRESSURE TRANSMITTER OR PRESSURE SWITCH
TH	THERMOMETER
PI	PRESSURE INDICATOR
	DIRECTION OF FLOW
	UNION - SCREWED OR FLANGED
	CONCENTRIC REDUCER
	NEW PIPING
	UNDERGROUND PIPING
	PIPING ELBOW TURNS DOWN
	PIPING ELBOW TURNS UP
	GAS SHUT-OFF VALVE
	MEDIUM PRESSURE GAS REGULATOR
	GAS SOLENOID VALVE
T	WALL MOUNTED THERMOSTAT WITH HUMIDITY SENSOR

MARKS

AHU	AIR HANDLING UNIT
AS	AIR SEPARATOR
B	BOILER
BT	BUFFER TANK
CH	CHILLER
CHWP	CHWP
DAC	DUCTLESS SPLIT AIR HANDLING UNIT
DCU	DUCTLESS SPLIT CONDENSING UNIT
DH	DEHUMIDIFIER
EF	INLINE EXHAUST FAN
ET	EXPANSION TANK
UH	HOT WATER UNIT HEATER
PHWP	PRIMARY HOT WATER PUMP
SHWP	SECONDARY HOT WATER PUMP
WH	WATER HEATER

SYM	DESCRIPTION	DATE	APPR

NAVFAC

SEAL: 05-08-26

CRENSHAW CONSULTING Engineers
NC LICENSE #C-1582 www.crenshawconsulting.com 3516 Bush Street, Suite 200 Raleigh, North Carolina 27609 919-871-9270 Fax: 871-5620

A/E INFO

APPROVED
Jeffrey D. Donahue, R.A.
FOR COMMANDER NAVFAC 5/13/2026

ACTIVITY

SATISFACTORY TO

DES	MPM	DRW	MAS	CHK	LWM
PM/DM	SLG/MDM				
BRANCH MANAGER	WRB				
CHIEF ENG/ARCH	JWJ				
FIRE PROTECTION	HPN				

DEPARTMENT OF THE NAVY
NAVAL FACILITIES ENGINEERING SYSTEMS COMMAND
MIDLANT DC CORE
MARINE CORPS BASE
NAVAL FACILITIES ENGINEERING SYSTEMS COMMAND ~ MIDATLANTIC
NAVAL STATION - NORFOLK, VA.
CAMP LEJEUNE, NC

P-1550 SOF MARINE RAIDER BATTALION / COMPANY / TEAM FACILITIES

MECHANICAL COVER SHEET

SCALE: AS INDICATED
EPROJECT NO.: 1701820
CONSTR. CONTR. NO.

A3
CO STG

NAVFAC DRAWING NO. 12903816
SHEET 74 OF 122
M-001

FINAL SUBMITTAL

DRAWFORM REVISION: 25 AUGUST 2020

File Path: M:\Camp Lejeune\MARSOC SOF Marine Bn HQ_Team (P-1550)\A3 STORAGE
Print Date: 5/6/2026 5:15:20 PM

GENERAL NOTES:

1. SEE SHEET M-001 FOR GENERAL NOTES, LEGEND & ABBREVIATIONS
2. PLAN DRAWINGS ARE DIAGRAMMATIC IN NATURE AND DO NO ILLUSTRATE ALL SPECIFIC DUCT TAKE-OFF CONFIGURATIONS, TAPS, ETC. PROVIDE FLEXIBLE DUCTWORK RUNOUTS TO ALL SUPPLY AND RETURN GRILLES WITH A MAXIMUM LENGTH OF 5 FEET AND SINGLE BENDS NO GREATER THAN 45 DEGREES. REFER TO PROJECT SPECIFICATIONS AND DUCTWORK DETAILS FOR SPECIFIC REQUIREMENTS.

PLAN NOTES

1. EXPOSED SUPPLY, EXHAUST AND RETURN DUCTWORK FROM AIR HANDLER IN MECHANICAL ROOM. COORDINATE EXACT ROUTING WITH ALL OTHER EQUIPMENT IN STORAGE AREA.
2. INSTALL DUCTLESS SPLIT AIR HANDLER OVER TELECOM ROOM DOOR. COORDINATE EXACT LOCATION OF AIR HANDLING UNIT WITH ALL OTHER EQUIPMENT TO BE INSTALLED WITHIN THE ROOM.ROUTE REFRIGERANT LINES THROUGH MECHANICAL ROOM TO GRADE MOUNTED CONDENSING UNIT. ROUTE CONDENSATE LINES TO EXTERIOR AND TERMINATE ON GRADE.
3. CONDENSING UNIT ON GRADE MOUNTED CONCRETE PAD PER MANUFACTURER'S CLEARANCES.
4. PROVIDE WALL MOUNTED EMERGENCY HVAC SHUTOFF SWITCH. SEE SHEET M-701 FOR MORE INFORMATION.

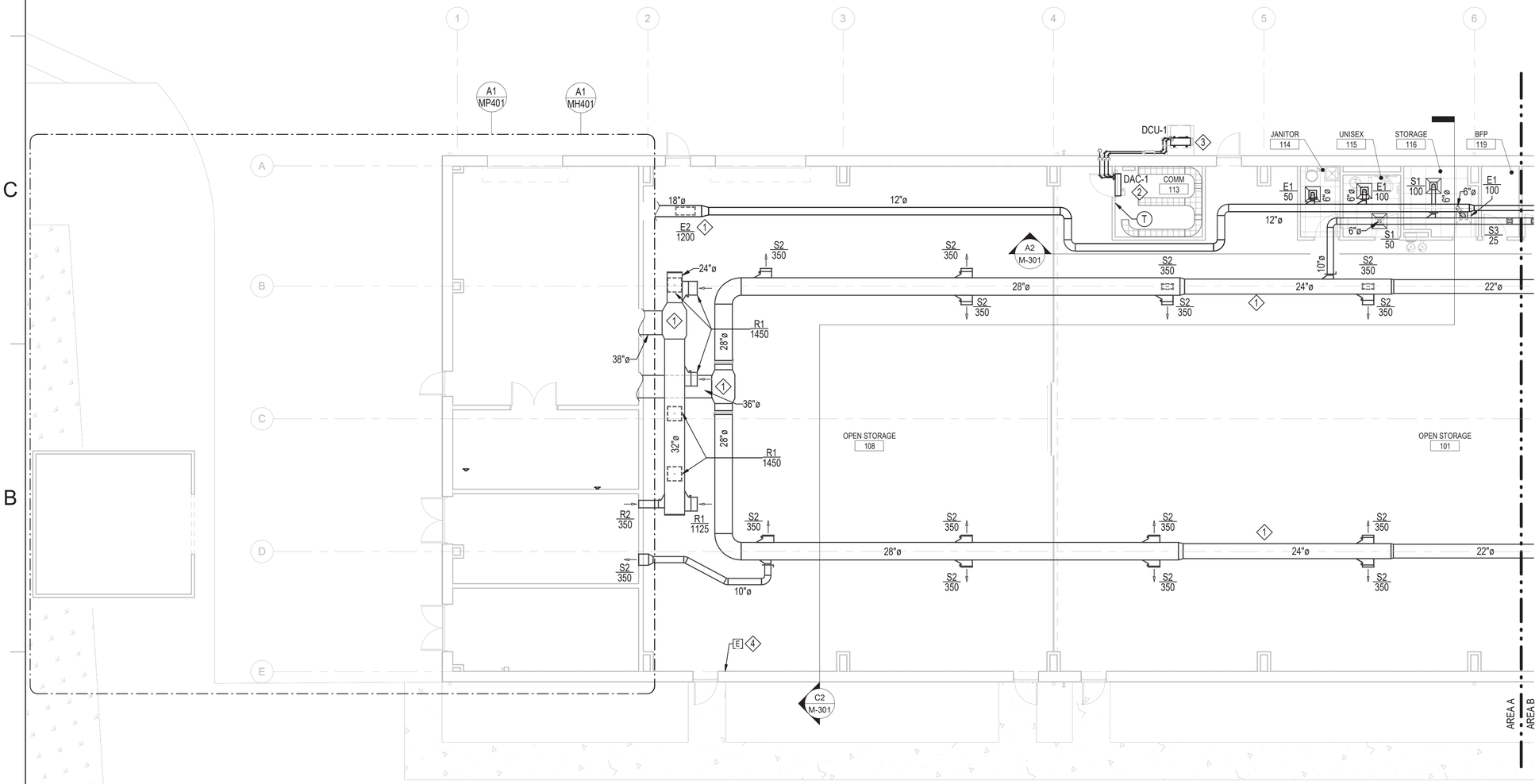

A1 FLOOR PLAN - MECHANICAL - AREA A
1/8" = 1'-0"

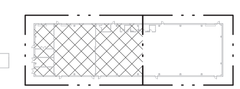

A5 KEY PLAN
1" = 100'-0"

GRAPHIC SCALE: 1/8"=1'-0"
8' 0 4' 8' 16'

SYM	DESCRIPTION	DATE	APPR

NAVFAC

SEAL: 05-08-26

CRENSHAW CONSULTING engineers
NC LICENSE #C-1164 | 5808 Bush Street, Suite 200 Raleigh, North Carolina 27609 | 919-871-9270 Fax 871-5620

A/E INFO

APPROVED
FOR COMMANDER NAVFAC 5/13/2026
ACTIVITY

SATISFACTORY TO

DES MPM	DRW MAS	CHK LWM	
PM/DM			SLG/MDM
BRANCH MANAGER			WRB
CHIEF ENG/ARCH			JWJ
FIRE PROTECTION			HPN

DEPARTMENT OF THE NAVY
NAVAL FACILITIES ENGINEERING SYSTEMS COMMAND
MIDLANT DC CORE
MARINE CORPS BASE
NAVAL FACILITIES ENGINEERING SYSTEMS COMMAND ~ MIDATLANTIC
NAVAL STATION - NORFOLK, VA
CAMP LEJEUNE, NC

P-1550 SOF MARINE RAIDER BATTALION / COMPANY / TEAM FACILITIES

FLOOR PLAN - MECHANICAL - AREA A

SCALE: AS INDICATED
EPROJECT NO.: 1701820
CONSTR. CONTR. NO.

NAVFAC DRAWING NO. 12903817
SHEET 75 OF 122

A3
CO STG
MH101

FINAL SUBMITTAL
DRAWFORM REVISION: 25 AUGUST 2020

File Path: M:\Camp Lejeune\MARSOC SOF Marine Bn HQ_Team (P-1550)\A3 STORAGE
Print Date: 5/6/2026 5:15:25 PM

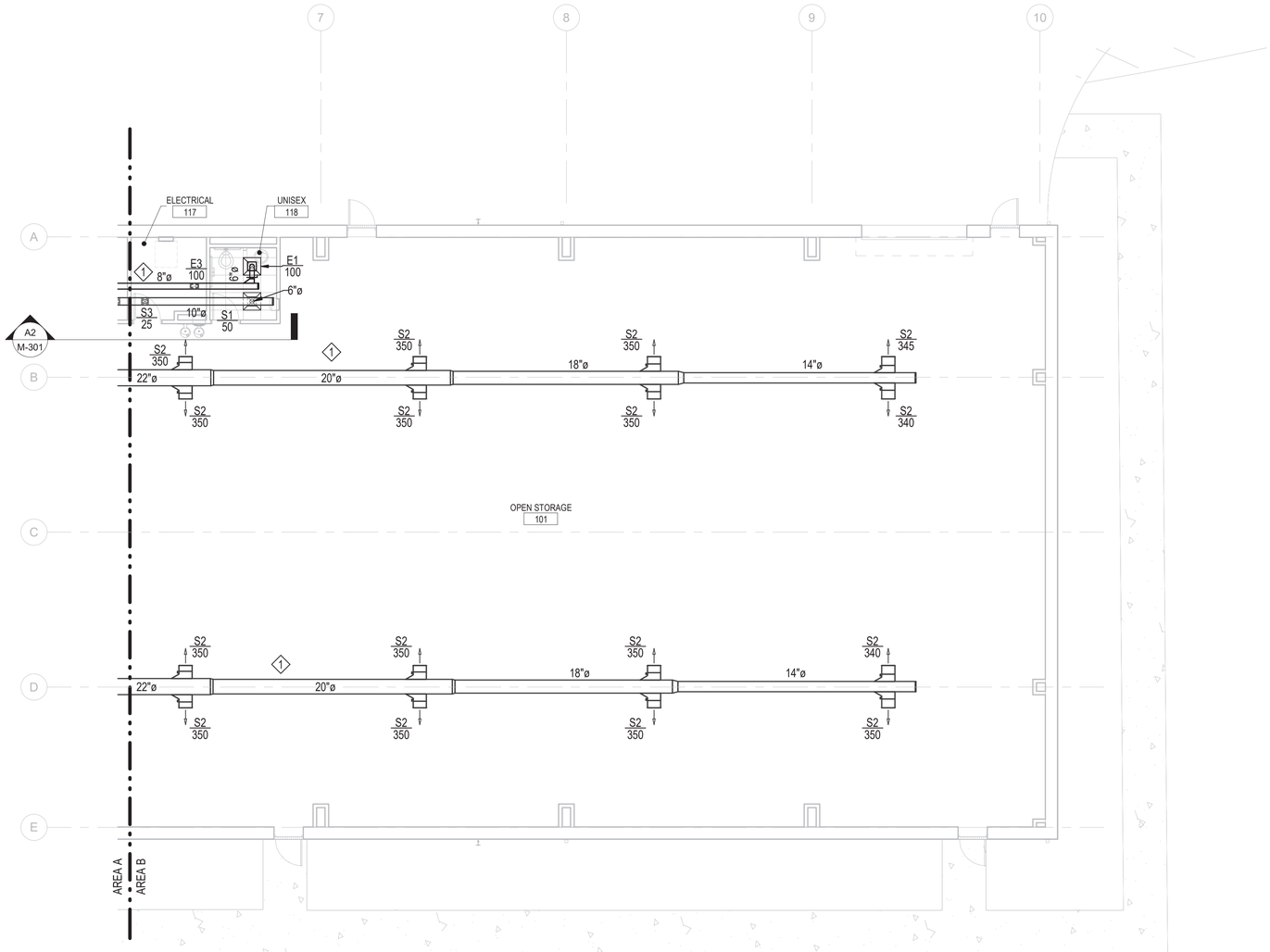

A1 FLOOR PLAN - MECHANICAL - AREA B

1/8" = 1'-0"

GRAPHIC SCALE: 1/8"=1'-0"

8' 0 4' 8' 16'

GENERAL NOTES:

1. SEE SHEET M-001 FOR GENERAL NOTES, LEGEND & ABBREVIATIONS
2. PLAN DRAWINGS ARE DIAGRAMMATIC IN NATURE AND DO NO ILLUSTRATE ALL SPECIFIC DUCT TAKE-OFF CONFIGURATIONS, TAPS, ETC. PROVIDE FLEXIBLE DUCTWORK RUNOUTS TO ALL SUPPLY AND RETURN GRILLES WITH A MAXIMUM LENGTH OF 5 FEET AND SINGLE BENDS NO GREATER THAN 45 DEGREES. REFER TO PROJECT SPECIFICATIONS AND DUCTWORK DETAILS FOR SPECIFIC REQUIREMENTS.

PLAN NOTES

1 EXPOSED SUPPLY, EXHAUST AND RETURN DUCTWORK FROM AIR HANDLER IN MECHANICAL ROOM. COORDINATE EXACT ROUTING WITH ALL OTHER EQUIPMENT IN STORAGE AREA.

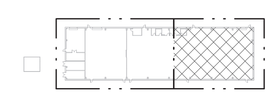

A5 KEY PLAN

1" = 100'-0"

SYM	DESCRIPTION	DATE	APPR

NAVFAC

NORTH CAROLINA PROFESSIONAL SEAL 056500 ENGINEER JAMES E. WRIGHT III

05-08-26

SEAL

CRENSHAW CONSULTING Engineers

NC LICENSE #C-1164 www.crenshawconsulting.com 3836 Bush Street, Suite 200 Raleigh, North Carolina 27609 919-871-9270 Fax: 871-5620

A/E INFO

APPROVED

JOHN E. CRENSHAW, P.E.

FOR COMMANDER NAVFAC 5/13/2026

ACTIVITY

SATISFACTORY TO

DES	MPM	DRW	MAS	CHK	LWM

PM/DM	SLG/MDM
BRANCH MANAGER	WRB
CHIEF ENG/ARCH	JWJ
FIRE PROTECTION	HPN

DEPARTMENT OF THE NAVY
NAVAL FACILITIES ENGINEERING SYSTEMS COMMAND
MIDLANT DC CORE
MARINE CORPS BASE

NAVAL FACILITIES ENGINEERING SYSTEMS COMMAND ~ MIDATLANTIC
NAVAL STATION - NORFOLK, VA
CAMP LEJEUNE, NC

P-1550 SOF MARINE RAIDER BATTALION / COMPANY / TEAM FACILITIES

FLOOR PLAN - MECHANICAL - AREA B

SCALE:	AS INDICATED
EPROJECT NO.:	1701820
CONSTR. CONTR. NO.	
NAVFAC DRAWING NO.	12903818
SHEET	76 OF 122

A3

CO STG

MH102

FINAL SUBMITTAL

DRAWFORM REVISION: 25 AUGUST 2020

File Path: M:\Camp Lejeune\MARSOC SOF Marine Bn HQ_Team (P-1550)\A3 STORAGE
Print Date: 5/6/2026 5:15:29 PM

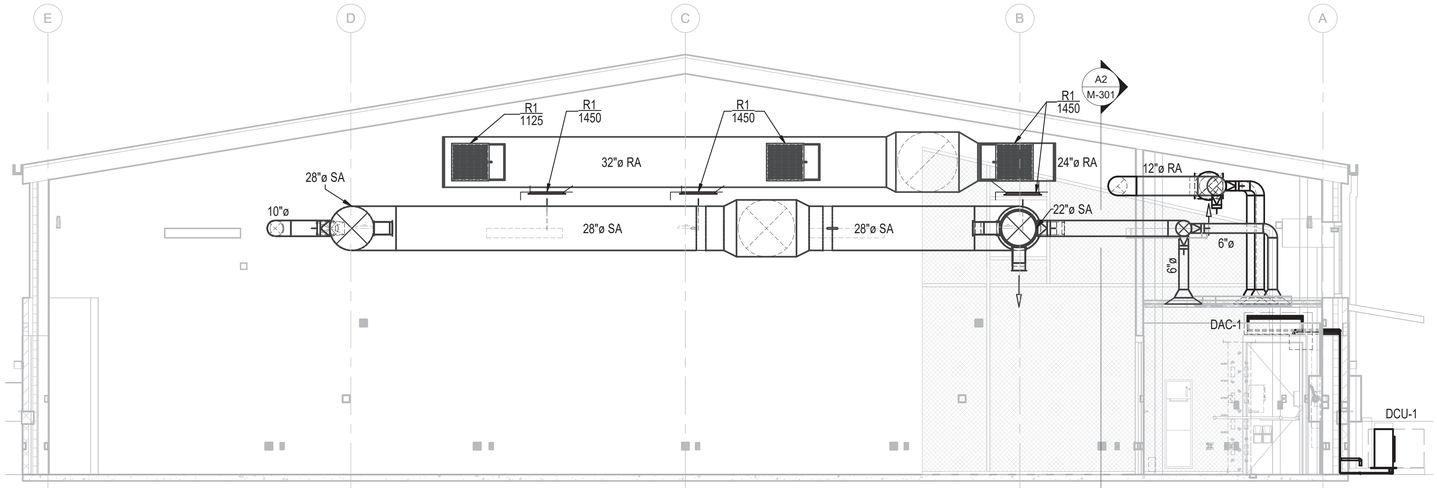

C2 TRANSVERSE BUILDING SECTION VIEW
1/4" = 1'-0"

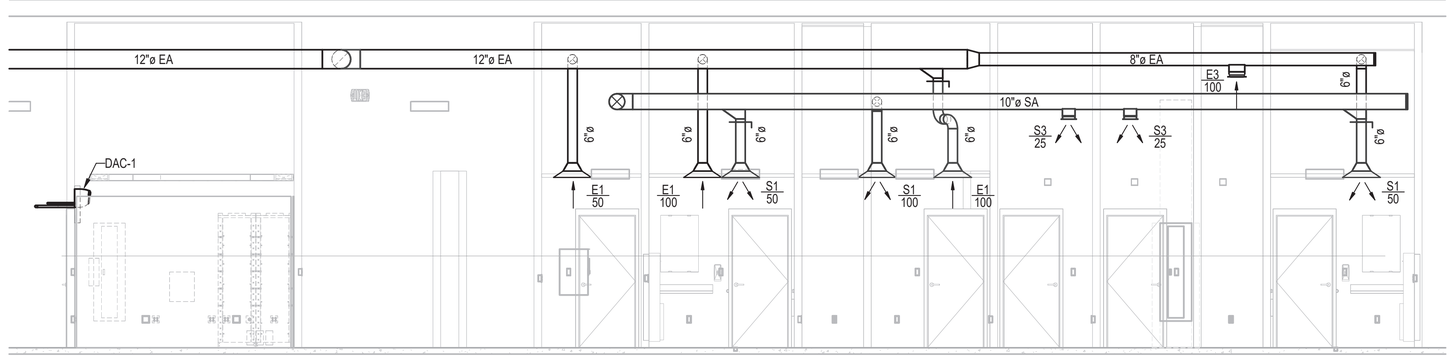

A2 SECTION VIEW AT ROOMS
1/4" = 1'-0"

GRAPHIC SCALE: 1/4"=1'-0"
4' 0 2' 4' 8'

SYM	DESCRIPTION	DATE	APPR

NAVFAC

SEAL
05-08-26

CRENSHAW CONSULTING Engineers
NC LICENSE #C-1562
www.crenshawconsulting.com
3836 Bush Street, Suite 200
Raleigh, North Carolina 27609
919-871-9270 Fax 871-5620

A/E INFO

APPROVED
FOR COMMANDER NAVFAC 5/13/2026
ACTIVITY

SATISFACTORY TO

DES	MPM	DRW	MAS	CHK	LWM
PM/DM	SLG/MDM				
BRANCH MANAGER	WRB				
CHIEF ENG/ARCH	JWJ				
FIRE PROTECTION	HPN				

DEPARTMENT OF THE NAVY
NAVAL FACILITIES ENGINEERING SYSTEMS COMMAND
MIDLANT DC CORE
MARINE CORPS BASE
NAVAL FACILITIES ENGINEERING SYSTEMS COMMAND ~ MIDATLANTIC
NAVAL STATION - NORFOLK, VA.
CAMP LEJEUNE, NC
P-1550 SOF MARINE RAIDER
BATTALION / COMPANY / TEAM FACILITIES
MECHANICAL SECTION VIEWS

SCALE: AS INDICATED
EPROJECT NO.: 1701820
CONSTR. CONTR. NO.
NAVFAC DRAWING NO. 12903819
SHEET 77 OF 122
A3
CO STG
M-301
FINAL SUBMITTAL
DRAWFORM REVISION: 25 AUGUST 2020

File Path: M:\Camp Lejeune\MARSOC SOF Marine Bn HQ_Team (P-1550)\A3 STORAGE
Print Date: 5/6/2026 5:15:34 PM

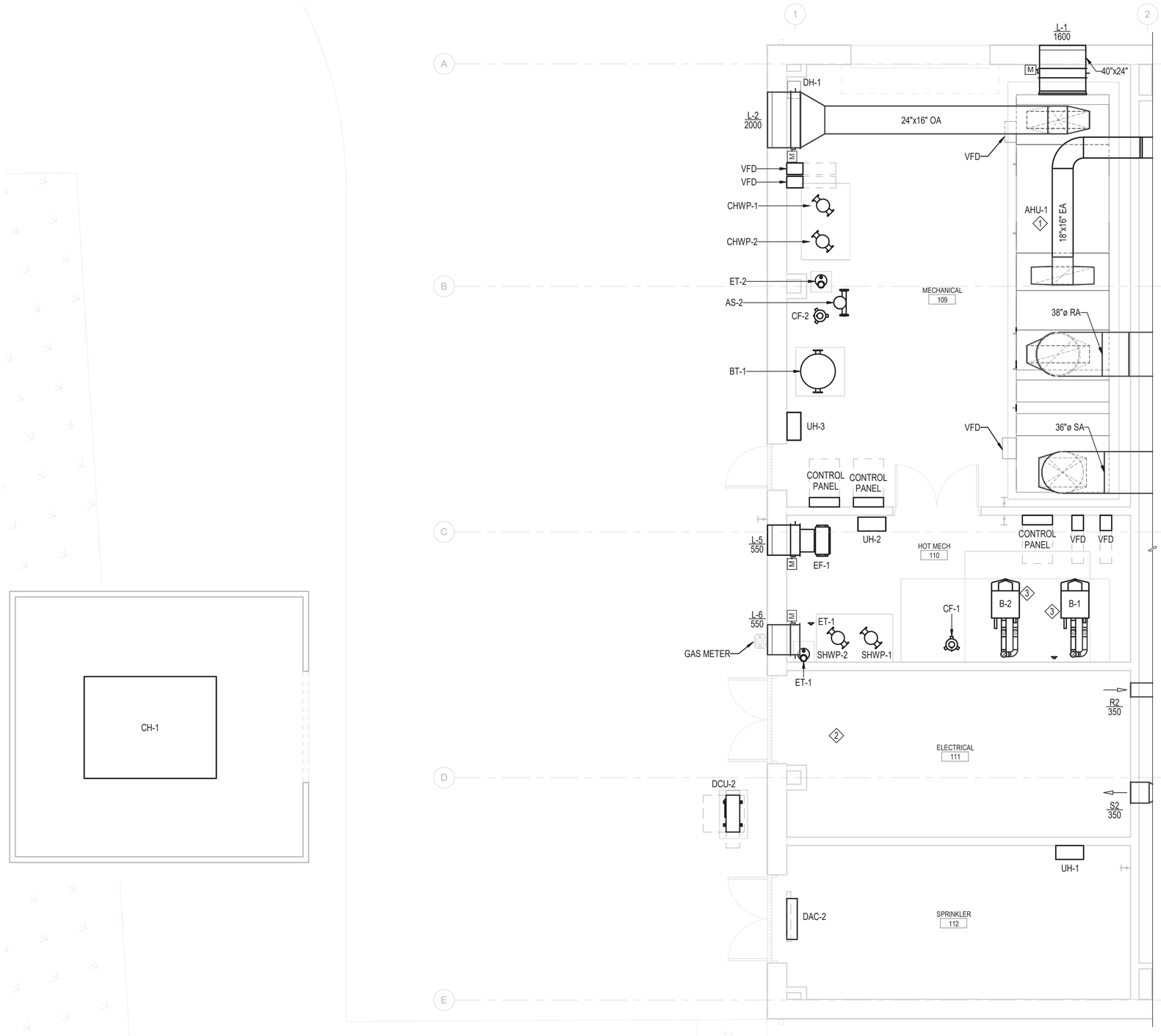

A1 MECHANICAL ROOM AND CHILLER YARD ENLARGED - MECHANICAL

1/4" = 1'-0"

GRAPHIC SCALE: 1/4"=1'-0"

4' 0 2' 4' 8'

GENERAL NOTES:

1. SEE SHEET M-001 FOR GENERAL NOTES, LEGEND & ABBREVIATIONS
2. PLAN DRAWINGS ARE DIAGRAMMATIC IN NATURE AND DO NO ILLUSTRATE ALL SPECIFIC DUCT TAKE-OFF CONFIGURATIONS, TAPS, ETC. PROVIDE FLEXIBLE DUCTWORK RUNOUTS TO ALL SUPPLY AND RETURN GRILLES WITH A MAXIMUM LENGTH OF 5 FEET AND SINGLE BENDS NO GREATER THAN 45 DEGREES. REFER TO PROJECT SPECIFICATIONS AND DUCTWORK DETAILS FOR SPECIFIC REQUIREMENTS.

PLAN NOTES

1. EXPOSED SUPPLY, EXHAUST AND RETURN DUCTWORK FROM AIR HANDLER IN MECHANICAL ROOM. COORDINATE EXACT ROUTING WITH ALL OTHER EQUIPMENT IN STORAGE AREA.
2. INSTALL DUCTLESS SPLIT AIR HANDLER OVER TELECOM ROOM DOOR. COORDINATE EXACT LOCATION OF AIR HANDLING UNIT WITH ALL OTHER EQUIPMENT TO BE INSTALLED WITHIN THE ROOM.ROUTE REFRIGERANT LINES THROUGH MECHANICAL ROOM TO GRADE MOUNTED CONDENSING UNIT. ROUTE CONDENSATE LINES TO EXTERIOR AND TERMINATE ON GRADE.
3. BOILER MOUNTED ON CONCRETE PAD. ROUTE BOILER INTAKE AND EXHAUST FLUE TO ROOF.

SYM	DESCRIPTION	DATE	APPR

NAVFAC

NORTH CAROLINA PROFESSIONAL SEAL 056500 ENGINEER MICHAEL W. MANDIA 05-08-26

SEAL

CRENSHAW CONSULTING Engineers
NC LICENSE #C-1582 www.crenshawconsulting.com 3836 Bush Street, Suite 200 Raleigh, North Carolina 27609 919-871-9270 Fax 871-5620

A/E INFO

APPROVED
DOCUSIGNED BY: S.L. BRUNSON
FOR COMMANDER NAVFAC 5/13/2026

ACTIVITY

SATISFACTORY TO

DES	MPM	DRW	MAS	CHK	LWM
PM/DM	SLG/MDM				
BRANCH MANAGER	WRB				
CHIEF ENG/ARCH	JWJ				
FIRE PROTECTION	HPN				

DEPARTMENT OF THE NAVY
NAVAL FACILITIES ENGINEERING SYSTEMS COMMAND
NAVAL FACILITIES ENGINEERING SYSTEMS COMMAND ~ MIDATLANTIC
MIDLANT DC CORE
NAVAL STATION - NORFOLK, VA
MARINE CORPS BASE
CAMP LEJEUNE, NC

P-1550 SOF MARINE RAIDER
BATTALION / COMPANY / TEAM FACILITIES

MECHANICAL ROOM AND CHILLER YARD ENLARGED - MECHANICAL

SCALE:	AS INDICATED
EPROJECT NO.:	1701820
CONSTR. CONTR. NO.	
NAVFAC DRAWING NO.	12903820
SHEET	78 OF 122

A3
CO STG

MH401

FINAL SUBMITTAL

DRAWFORM REVISION: 25 AUGUST 2020

File Path: M:\Camp Lejeune\MARSOC SOF Marine Bn HQ_Team (P-1550)\A3 STORAGE
Print Date: 5/6/2026 5:15:38 PM

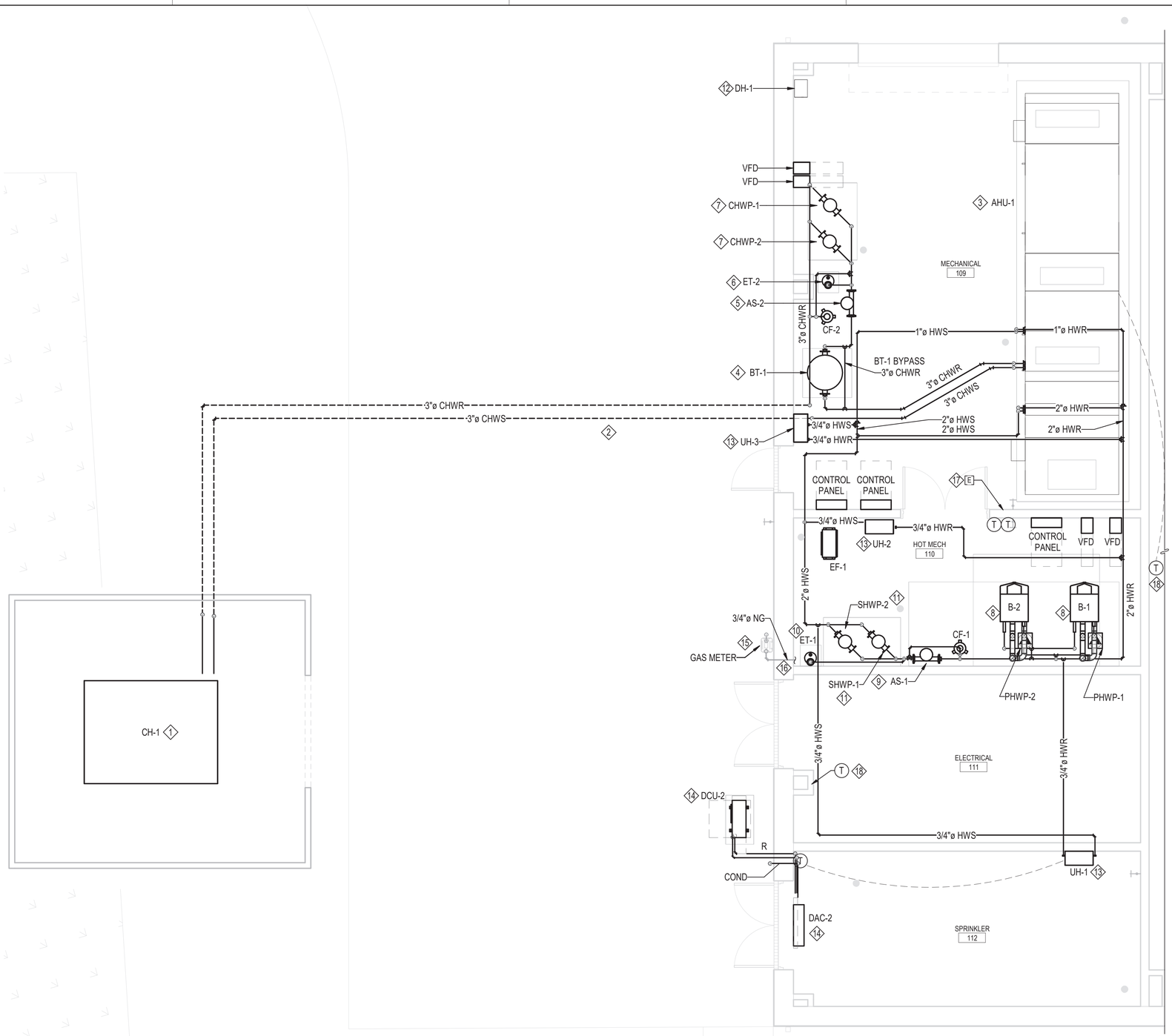

A1 MECHANICAL ROOM AND CHILLER YARD ENLARGED - MECHANICAL PIPING

1/4" = 1'-0"

GRAPHIC SCALE: 1/4"=1'-0"

4' 0 2' 4' 8'

GENERAL NOTES:

1. SEE SHEET M-001 FOR GENERAL NOTES, LEGEND & ABBREVIATIONS
2. PIPING IS TO BE INSTALLED SO THAT ALL VALVES, STRAINERS, UNIONS, TRAPS AND FLANGES REQUIRING ACCESS ARE EASILY ACCESSIBLE. ALL VALVES MUST BE INSTALLED SO THAT THE SYSTEM REMAINS IN SERVICE WHEN EQUIPMENT OR PIPING (ON EQUIPMENT SIDE OF VALVE) IS REMOVED. ALL BALANCING VALVES AND BUTTERFLY VALVES MUST BE PROVIDED WITH POSITION INDICATORS AND MAXIMUM ADJUSTABLE STOPS. ALL VALVES (EXCEPT CONTROL VALVES) AND STRAINERS MUST BE FULL SIZE OF PIPE BEFORE REDUCING SIZE TO MAKE CONNECTIONS TO EQUIPMENT OR CONTROLS.

PLAN NOTES

1. AIR-COOLED CHILLER ON GRADE MOUNTED CONCRETE PAD. PROVIDE MANUFACTURER'S AIRFLOW AND MAINTENANCE CLEARANCES AROUND CHILLER.
2. CHILLED WATER PIPING FROM AIR-COOLED CHILLER TO MECHANICAL ROOM IN BUILDING. PIPING TO BE ROUTED UNDERGROUND FROM CHILLER YARD TO INTERIOR OF BUILDING AS SHOWN. COORDINATE PIPE ROUTING (ABOVE OR BELOW GRADE) WITH DETAIL C4/M-504.
3. FLOOR MOUNTED AIR HANDLER, MOUNTED ON NEW CONCRETE PAD. PROVIDE CLEARANCES AROUND UNIT AS SHOWN. CONNECT CHILLED AND HOT WATER PIPING AS SHOWN.
4. CHILLED WATER BUFFER TANK ON CONCRETE PAD ON FLOOR.
5. CHILLED WATER AIR SEPARATOR.
6. CHILLED WATER EXPANSION TANK
7. INLINE CHILLED WATER PUMP MOUNTED ON CONCRETE PAD ON FLOOR.
8. BOILER MOUNTED ON CONCRETE PAD. PROVIDE WITH INLINE BOILER FEED PUMP ON INLET OF BOILER.
9. HOT WATER AIR SEPARATOR.
10. HOT WATER EXPANSION TANK
11. INLINE HOT WATER PUMP MOUNTED ON CONCRETE PAD ON FLOOR.
12. DEHUMIDIFIER, MOUNTED ON WALL AT 60" ON SHELF. PIPE TO FLOOR DRAIN IN MECHANICAL ROOM. COORDINATE EXACT LOCATION WITH ALL OTHER EQUIPMENT TO PROVIDE PROPER CLEARANCES.
13. HOT WATER UNIT HEATER MOUNTED UP HIGH IN SPACE. COORDINATE EXACT LOCATION WITH ALL OTHER EQUIPMENT AND PIPING TO PROVIDE PROPER CLEARANCES.
14. INSTALL DUCTLESS SPLIT AIR HANDLER OVER ROOM DOOR. COORDINATE EXACT LOCATION OF AIR HANDLING UNIT WITH ALL OTHER EQUIPMENT TO BE INSTALLED WITHIN THE ROOM. ROUTE REFRIGERANT LINES THROUGH MECHANICAL ROOM TO GRADE MOUNTED CONDENSING UNIT. ROUTE CONDENSATE LINES TO EXTERIOR AND TERMINATE ON GRADE.
15. UTILITY COMPANY TO PROVIDE NEW GAS METER WITH 2PSI OUTLET PRESSURE. CONTRACTOR TO PROVIDE A UNION AND LOCKABLE BALL VALVE WHEN CONNECTING TO THE METER. UTILITY COMPANY TO COORDINATE WITH CIVIL REGARDING GASE SERVICE PIPE TO METER.
16. 2 PSI GAS PIPING ROUTED FROM METER TO INTO MECHANICAL BUILDING TO NEW BOILERS. ALL GAS PIPING TO BE PAINTED SAFETY YELLOW. SEE GAS RISER ON SHEET M-507 FOR MORE INFORMATION.
17. PROVIDE WALL MOUNTED EMERGENCY SHUTOFF SWITCH TIED TO GAS SOLENOID SHUTOFF VALVE. SEE SHEET M-701 FOR MORE INFORMATION.
18. WALL MOUNTED THERMOSTAT. MOUNT 48" A.F.F.

SYM	DESCRIPTION	DATE	APPR

NAVFAC

NORTH CAROLINA PROFESSIONAL SEAL 056500 ENGINEER FRANK W. MERANDA 05-08-26

SEAL

CRENSHAW CONSULTING Engineers
NC LICENSE #C-1164 www.crenshawcc.com 3836 Bush Street, Suite 200 Raleigh, North Carolina 27609 919-871-9270 Fax: 871-5620

A/E INFO

APPROVED
CODE 1 YES NO
FOR COMMANDER NAVFAC 5/13/2026
ACTIVITY

SATISFACTORY TO

DES	MPM	DRW	MAS	CHK	LWM
PM/DM	SLG/MDM				
BRANCH MANAGER	WRB				
CHIEF ENG/ARCH	JWJ				
FIRE PROTECTION	HPN				

DEPARTMENT OF THE NAVY
NAVAL FACILITIES ENGINEERING SYSTEMS COMMAND
MIDLANT DC CORE
MARINE CORPS BASE

NAVAL FACILITIES ENGINEERING SYSTEMS COMMAND ~ MIDATLANTIC
NAVAL STATION - NORFOLK, VA
CAMP LEJEUNE, NC

P-1550 SOF MARINE RAIDER BATTALION / COMPANY / TEAM FACILITIES

MECHANICAL ROOM AND CHILLER YARD ENLARGED - MECHANICAL PIPING

SCALE: AS INDICATED
EPROJECT NO.: 1701820
CONSTR. CONTR. NO.

NAVFAC DRAWING NO. 12903821
SHEET 79 OF 122

A3
CO STG

MP401

FINAL SUBMITTAL

DRAWFORM REVISION: 25 AUGUST 2020

File Path: M:\Camp Lejeune\MARSOC SOF Marine Bn HQ_Team (P-1550)\A3 STORAGE
Print Date: 5/6/2026 5:15:42 PM

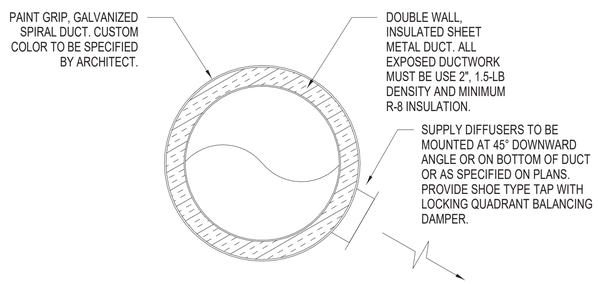

NOTE: ALL DUCT DIMENSIONS SHOWN ON THESE DRAWINGS ARE INSIDE CLEAR.

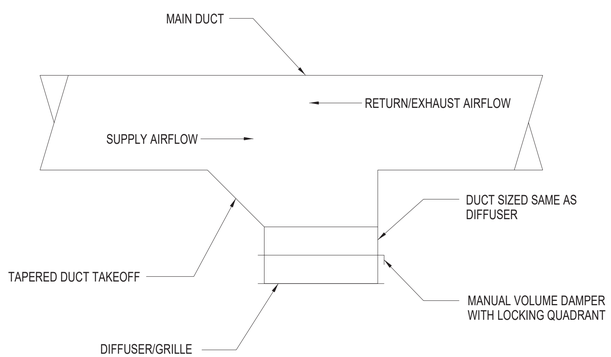

B1 DUCT MOUNTED GRILLE DETAIL
NTS

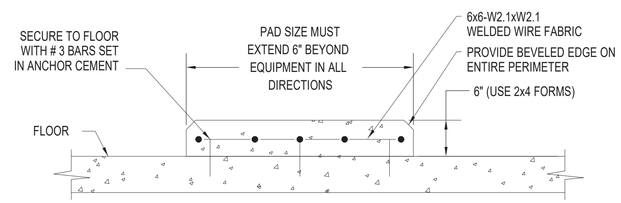

NOTES

1. CONTRACTOR MUST PROVIDE PADS FOR AIR HANDLERS, PUMPS AND OTHER FLOOR MOUNTED EQUIPMENT.

B2 HOUSEKEEPING PAD DETAIL
NTS

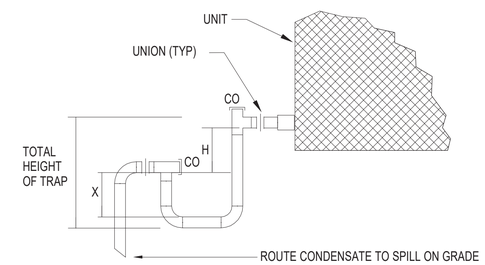

TOTAL HEIGHT OF TRAP = X+H+(1-1/2 x PIPE DIAMETER) (WITHOUT INSULATION)

BLOW THROUGH	DRAW THROUGH
X = MIN. 1" PLUS CASING STATIC PRESSURE	X = 1/2 "H"
H = MIN. 1"	H = MIN. 1" PLUS CASING STATIC PRESSURE

B4 COIL DRAIN PIPING DETAIL
NTS

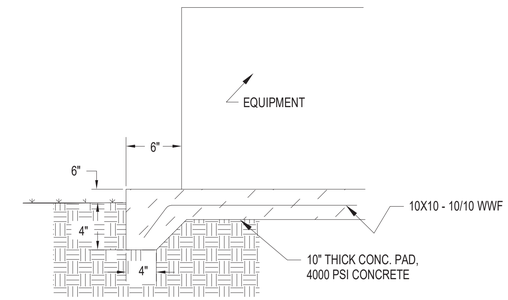

D4 EQUIPMENT SUPPORT PAD DETAIL
NTS

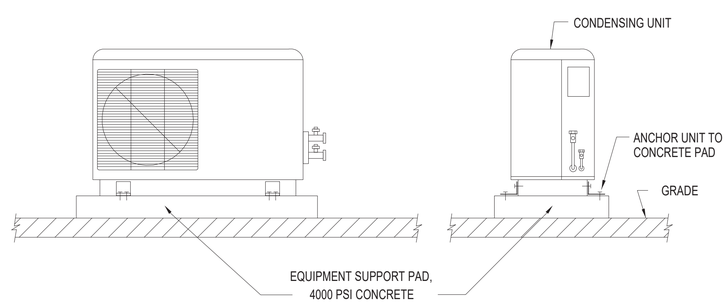

A2 SPLIT SYSTEM CONDENSING UNIT MOUNTING DETAIL
NTS

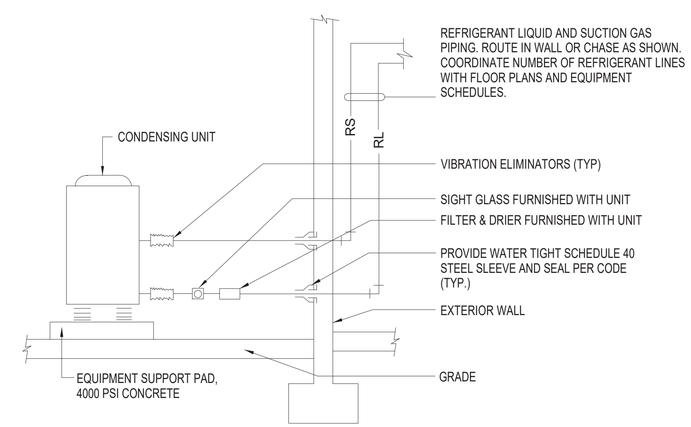

A4 REFRIGERANT PIPING DETAIL
NTS

SYM	DESCRIPTION	DATE	APPR

NAVFAC

NORTH CAROLINA PROFESSIONAL SEAL 056500 ENGINEER JAMES W. MERRITT
05-08-26
SEAL

CRENSHAW CONSULTING Engineers
NC LICENSE #C-1164 www.crenshawconsulting.com 3836 Bush Street, Suite 200 Raleigh, North Carolina 27609 919-871-9270 Fax 871-5620

A/E INFO

APPROVED
FOR COMMANDER NAVFAC 5/13/2026
ACTIVITY

SATISFACTORY TO

DES	MPM	DRW	MAS	CHK	LWM

PM/DM	SLG/MDM
BRANCH MANAGER	WRB
CHIEF ENG/ARCH	JWJ
FIRE PROTECTION	HPN

DEPARTMENT OF THE NAVY
NAVAL FACILITIES ENGINEERING SYSTEMS COMMAND
MIDLANT DC CORE
MARINE CORPS BASE
NAVAL FACILITIES ENGINEERING SYSTEMS COMMAND ~ MIDATLANTIC
NAVAL STATION - NORFOLK, VA.
CAMP LEJEUNE, NC
P-1550 SOF MARINE RAIDER BATTALION / COMPANY / TEAM FACILITIES
MECHANICAL DETAILS

SCALE: AS INDICATED
EPROJECT NO.: 1701820
CONSTR. CONTR. NO.

NAVFAC DRAWING NO. 12903822
SHEET 80 OF 122
A3
CO STG
M-501

FINAL SUBMITTAL
DRAWFORM REVISION: 25 AUGUST 2020

File Path: M:\Camp Lejeune\MARSOC SOF Marine Bn HQ_Team (P-1550)\A3 STORAGE
Print Date: 5/6/2026 5:15:45 PM

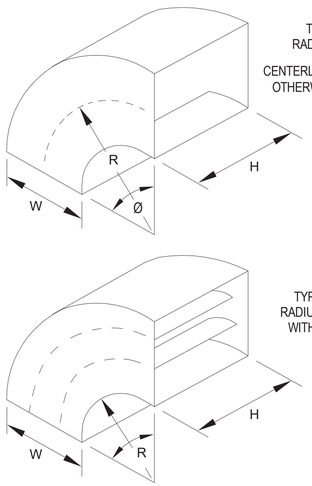

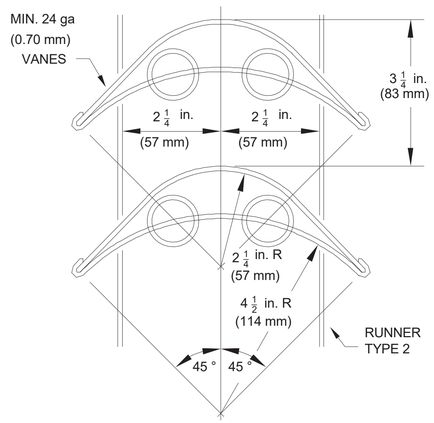

DOUBLE VANE SCHEDULE						
	W	H	R1	R2	SP	GA
LARGE	>18"	>18"	4-1/2"	2-1/4"	3-1/4"	24

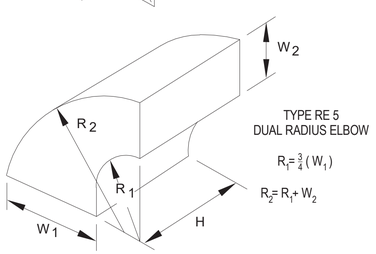

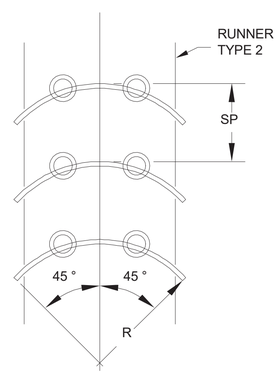

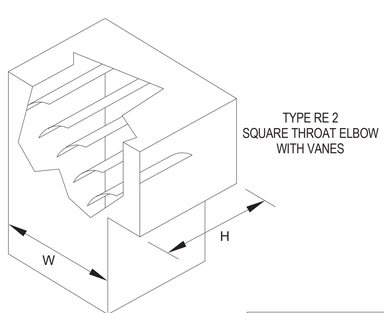

SINGLE VANE SCHEDULE					
	W	H	R	SP	GA
SMALL	<18"	<18"	2"	1-1/2"	24

MAXIMUM UNSUPPORTED VANE LENGTH LARGE DOUBLE VANE 72"

NOTE:

1. PROVIDE RADIUS TYPE ELBOW WITH CENTERLINE RADIUS OF 1.5 TIMES THE WIDTH OR DIAMETER OF THE DUCT WHERE SPACE PERMITS.

A1 DUCT RADIUS AND MITERED 90 ELBOW DETAIL
NTS

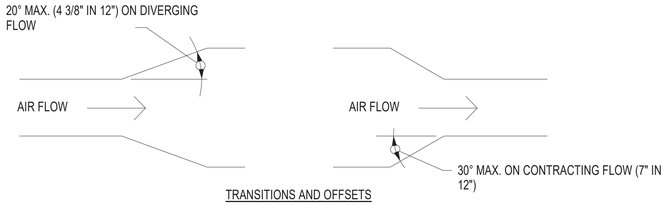

TRANSITIONS AND OFFSETS

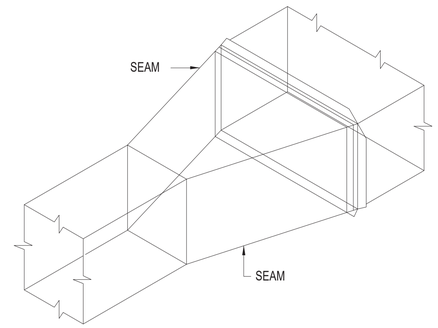

LARGEST DIMENSION GOVERNS CONSTRUCTION

CROSS BREAK OR BEAD FOR DUCT
PAGE 1-36 (SMACNA LOW PRESSURE
STAND. 5th ED.)

C3 DUCT TRANSITION DETAIL
NTS

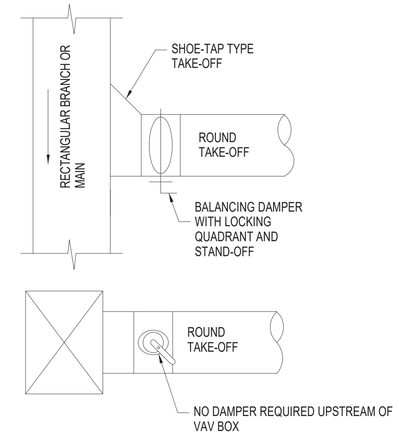

NOTE:

1. USE 90° SHOE TAP TYPE CONNECTIONS.
2. STRAIGHT IN FACTORY BUILT CONNECTIONS ARE PERMITTED FOR:
   A. SINGLE DIFFUSER, GRILLE OR REGISTER RUNOUTS OR FOR EXHAUST OR RETURN AIR APPLICATIONS.
   B. SINGLE DIFFUSER, GRILLE OR REGISTER RUNOUTS ON THE LOW PRESSURE SIDE OF TERMINAL BOXES.
3. STANDOFF REQUIRED FOR DAMPER HANDLE ON ALL INSULATED DUCT.

C4 DUCT TAKE-OFF DETAIL
NTS

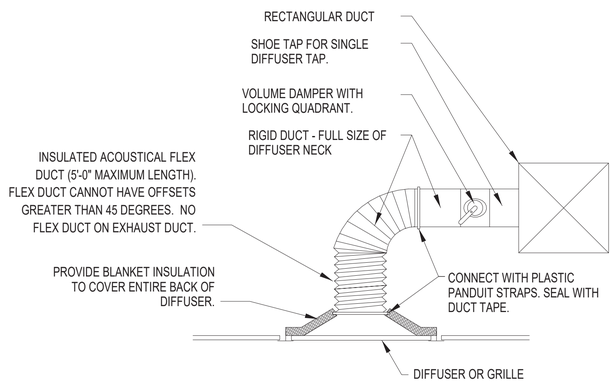

NOTE:

1. PROVIDE VOLUME DAMPERS ON RUN OUTS TO ALL DIFFUSERS AND GRILLES EXCEPT DO NOT INSTALL A VOLUME DAMPER ON A SUPPLY WHEN THERE IS ONLY ONE SUPPLY OUTLET ON TERMINAL BOX.
2. LOCATE DAMPER WHERE ACCESSIBLE.
3. STANDOFF REQUIRED FOR DAMPER HANDLE ON ALL INSULATED DUCT.
4. NO FLEXIBLE DUCT CAN BE USED IN EXHAUST SYSTEM. USE SNAPLOCK TYPE ROUND DUCT FOR ALL GRILLE RUN-OUTS.
5. SUPPLY CAN BE WIRE HELIX NON-METALLIC TYPE FLEXIBLE DUCT. RETURN MUST BE ALUMINUM METALLIC TYPE FLEXIBLE DUCT.
6. DETAIL SIMILAR FOR EXHAUST DUCT, ALL EXHAUST DUCT MUST BE RIGID METAL.

A3 DIFFUSER ASSEMBLY DETAIL
NTS

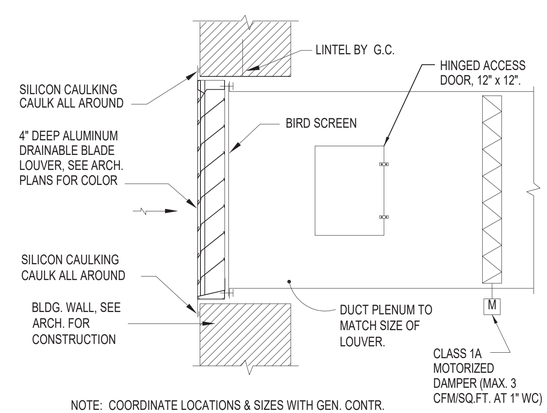

NOTE: COORDINATE LOCATIONS & SIZES WITH GEN. CONTR.

A4 LOUVER DETAIL
NTS

SYM	DESCRIPTION	DATE	APPR

NAVFAC

SEAL: 05-08-26

CRENSHAW CONSULTING Engineers
NC LICENSE #C-1164 — www.crenshawconsulting.com — 3836 Bush Street, Suite 200, Raleigh, North Carolina 27609 — 919-871-9270 Fax: 871-5620

A/E INFO

APPROVED
FOR COMMANDER NAVFAC 5/13/2026
ACTIVITY

SATISFACTORY TO

DES	MPM	DRW	MAS	CHK	LWM

PM/DM	SLG/MDM
BRANCH MANAGER	WRB
CHIEF ENG/ARCH	JWJ
FIRE PROTECTION	HPN

DEPARTMENT OF THE NAVY
NAVAL FACILITIES ENGINEERING SYSTEMS COMMAND
MIDLANT DC CORE
MARINE CORPS BASE
NAVAL FACILITIES ENGINEERING SYSTEMS COMMAND ~ MIDATLANTIC
NAVAL STATION - NORFOLK, VA
CAMP LEJEUNE, NC

P-1550 SOF MARINE RAIDER BATTALION / COMPANY / TEAM FACILITIES

MECHANICAL DETAILS

SCALE:	AS INDICATED
EPROJECT NO.:	1701820
CONSTR. CONTR. NO.	
NAVFAC DRAWING NO.	12903823
SHEET	81 OF 122

A3
CO STG
M-502

FINAL SUBMITTAL
DRAWFORM REVISION: 25 AUGUST 2020

File Path: M:\Camp Lejeune\MARSOC SOF Marine Bn HQ_Team (P-1550)\A3 STORAGE
Print Date: 5/6/2026 5:15:46 PM

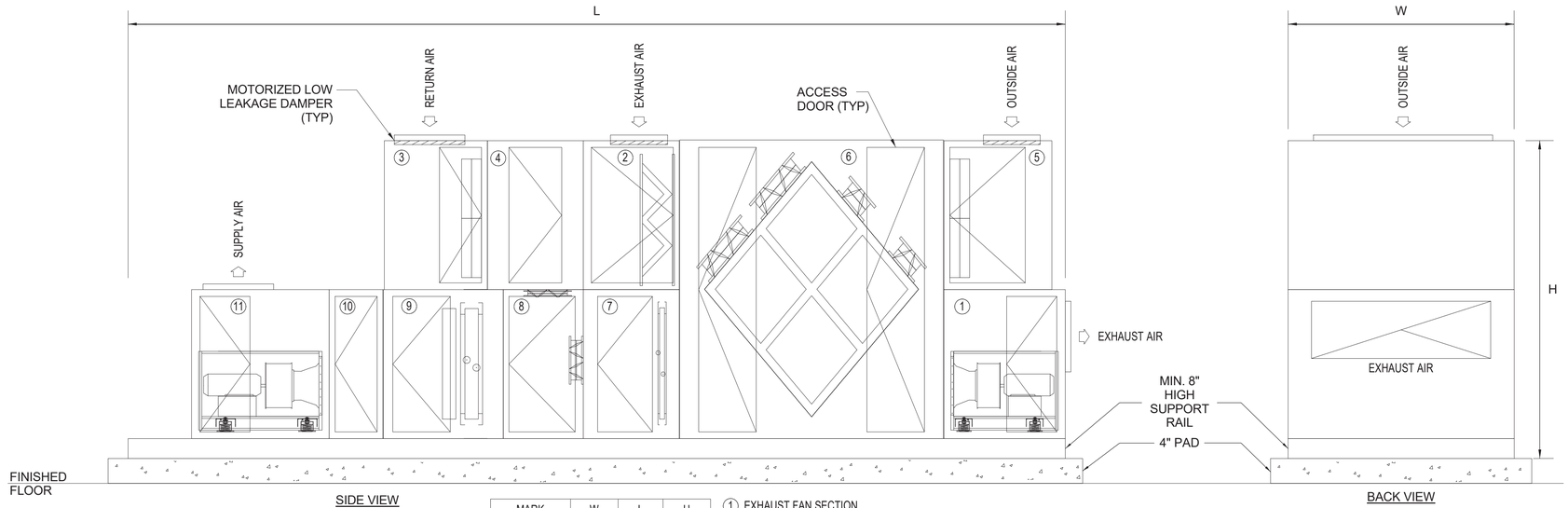

MARK	W	L	H
AHU-1	≈ 80"	≈ 340"	≈ 105"

NOTE:
AHU DIMENSIONS ARE GENERIC IN NATURE AND ARE MEANT TO CONVEY A GENERAL SENSE OF UNIT SIZING, AND NOT LIMIT COMPETITION. COORDINATE ACTUAL PURCHASED EQUIPMENT WITH AVAILABLE SPACE.

1. EXHAUST FAN SECTION
2. EXHAUST AIR INTAKE SECTION WITH MERV-8 FILTER
3. RETURN AIR INTAKE SECTION WITH MERV-8 PREFILTER AND MERV-13 FINAL FILTER
4. ACCESS/TURNING SECTION
5. OUTSIDE AIR INTAKE SECTION WITH MERV-8 PREFILTER AND MERV-13 FINAL FILTER
6. AIR TO AIR PLATE FRAME HEAT EXCHANGER WITH BYPASS
7. HOT WATER PREHEAT COIL SECTION
8. AIR MIXING SECTION WITH HIGH VELOCITY OPPOSED DAMPER AT BOTH INLETS
9. CHILLED WATER COOLING COIL SECTION
10. ACCESS SECTION
11. SUPPLY FAN SECTION

B1 TYPICAL AIR HANDLING UNIT DETAIL
NTS

HEAT TRACE CABLE SIZING CHART	
PIPE SIZE	MIN. WATTS PER FOOT
3/4" - 2-1/2"	4
3" - 4"	5
5" - 10"	7

HEAT TRACE CABLE:
(120V) WITH POWER CONNECTION KIT AND T-STAT SET AT 40°F. HVAC CONTRACTOR TO PROVIDE AND INSTALL HEAT TRACE CABLE AND ALL ACCESSORIES.
INSTALL PER MANUFACTURER'S INSTRUCTIONS.

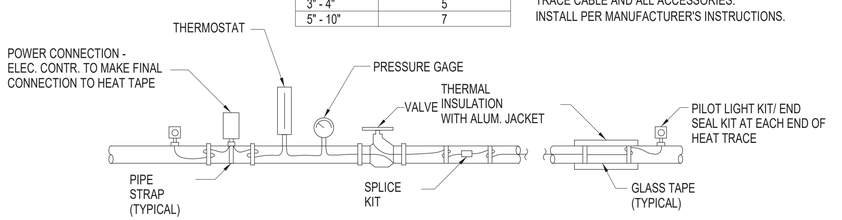

NOTES

1. PROVIDE A TEE KIT WHEN CONNECTING THREE LENGTHS HEAT TRACE CABLE TOGETHER.
2. INSTALL HEAT TRACE CABLE ON ALL DEVICES PER THIS DETAIL AND NOTES. THIS INCLUDES BUT IS NOT LIMITED TO TEES, ELBOWS, AND SUPPORTS EXPOSED ON EXTERIOR.
3. PROVIDE ELECTRICAL HEAT TRACE WARNING LABELS ON ALUMINUM JACKET ON PIPE INSULATION.

A1 HEAT TRACING DETAIL
NTS

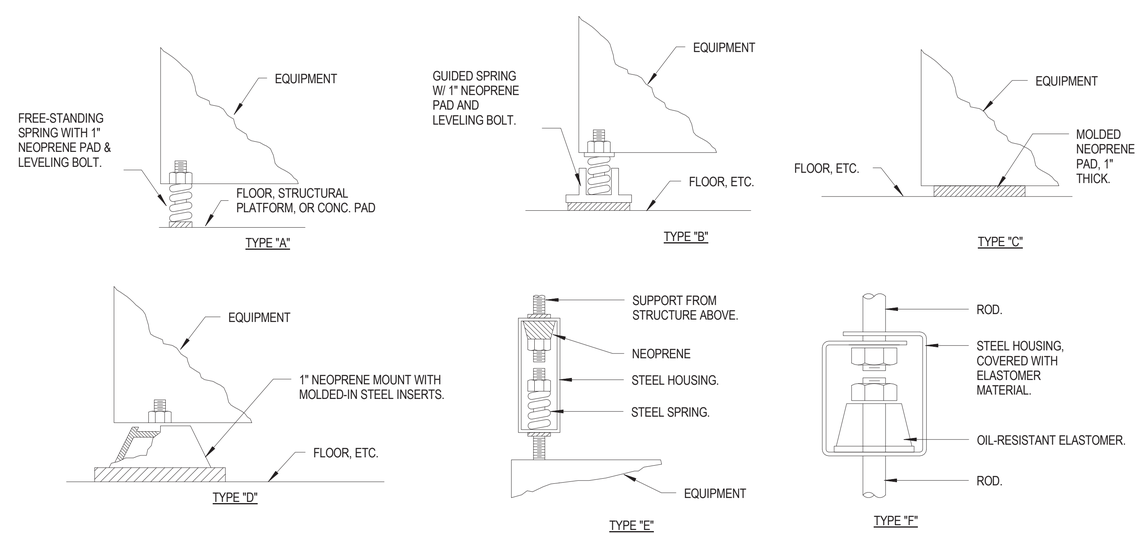

A3 VIBRATION ISOLATION DETAIL
NTS

SYM	DESCRIPTION	DATE	APPR

NAVFAC

SEAL: 05-08-26

CRENSHAW CONSULTING Engineers
NC LICENSE #C-1582 — 3836 Bush Street, Suite 200, Raleigh, North Carolina 27609, 919-871-9270, Fax 871-5620

A/E INFO

APPROVED
FOR COMMANDER NAVFAC 5/13/2026

ACTIVITY

SATISFACTORY TO

DES	MPM	DRW	MAS	CHK	LWM
PM/DM					SLG/MDM
BRANCH MANAGER					WRB
CHIEF ENG/ARCH					JWJ
FIRE PROTECTION					HPN

DEPARTMENT OF THE NAVY
NAVAL FACILITIES ENGINEERING SYSTEMS COMMAND
NAVAL FACILITIES ENGINEERING SYSTEMS COMMAND ~ MIDATLANTIC
MIDLANT DC CORE
NAVAL STATION - NORFOLK, VA
MARINE CORPS BASE
CAMP LEJEUNE, NC

P-1550 SOF MARINE RAIDER BATTALION / COMPANY / TEAM FACILITIES

MECHANICAL DETAILS

SCALE: AS INDICATED
EPROJECT NO.: 1701820
CONSTR. CONTR. NO.

NAVFAC DRAWING NO. 12903824
SHEET 82 OF 122

A3
CO STG

M-503

FINAL SUBMITTAL
DRAWFORM REVISION: 25 AUGUST 2020

File Path: M:\Camp Lejeune\MARSOC SOF Marine Bn HQ_Team (P-1550)\A3 STORAGE
Print Date: 5/6/2026 5:15:47 PM

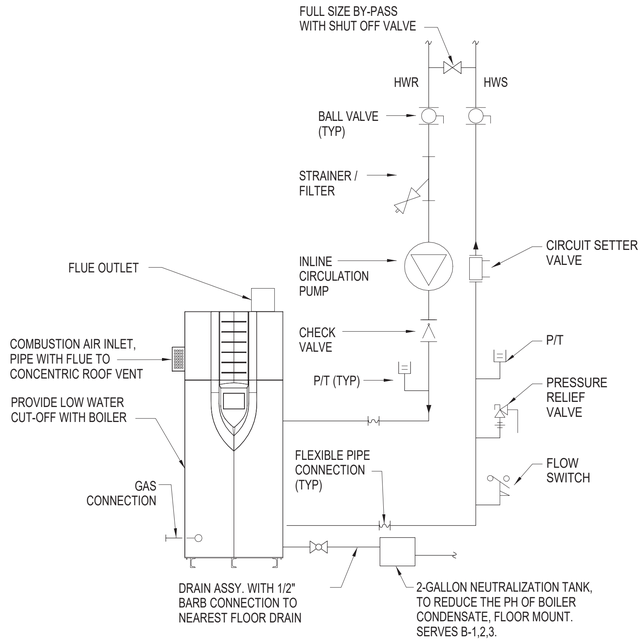

B1 HOT WATER BOILER DETAIL
NTS

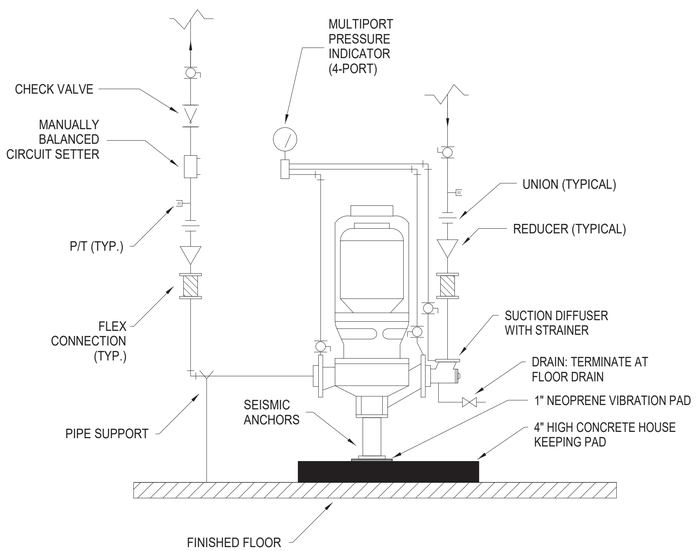

NOTES:
INSTALL ALL FLOW CONTROL BALANCING VALVES WITH A MINIMUM STRAIGHT, UNOBSTRUCTED LENGTH OF PIPE OF 5 DIAMETERS UPSTREAM AND 3 DOWNSTREAM OF THE DEVICES (MORE IF REQUIRED BY SPECIFIC MANUFACTURERS).

A1 INLINE PUMP INSTALLATION DETAIL
NTS

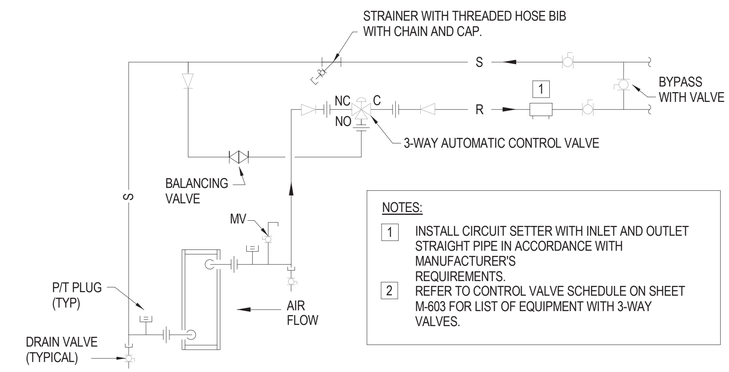

NOTES:
1. INSTALL CIRCUIT SETTER WITH INLET AND OUTLET STRAIGHT PIPE IN ACCORDANCE WITH MANUFACTURER'S REQUIREMENTS.
2. REFER TO CONTROL VALVE SCHEDULE ON SHEET M-603 FOR LIST OF EQUIPMENT WITH 3-WAY VALVES.

C4 HW & CHW COIL 3-WAY VALVE PIPING DETAIL
NTS

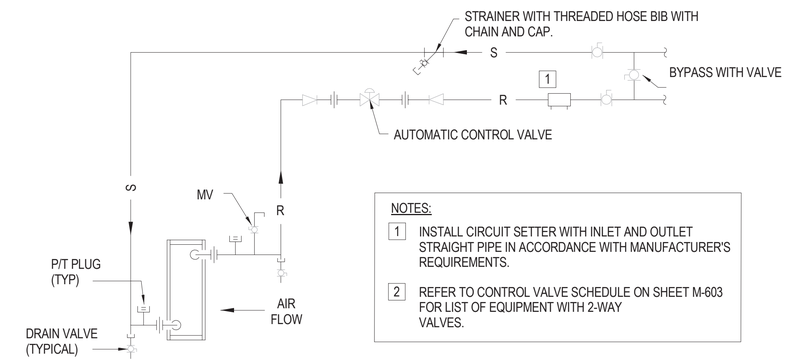

NOTES:
1. INSTALL CIRCUIT SETTER WITH INLET AND OUTLET STRAIGHT PIPE IN ACCORDANCE WITH MANUFACTURER'S REQUIREMENTS.
2. REFER TO CONTROL VALVE SCHEDULE ON SHEET M-603 FOR LIST OF EQUIPMENT WITH 2-WAY VALVES.

B4 HW & CHW COIL 2-WAY VALVE PIPING DETAIL
NTS

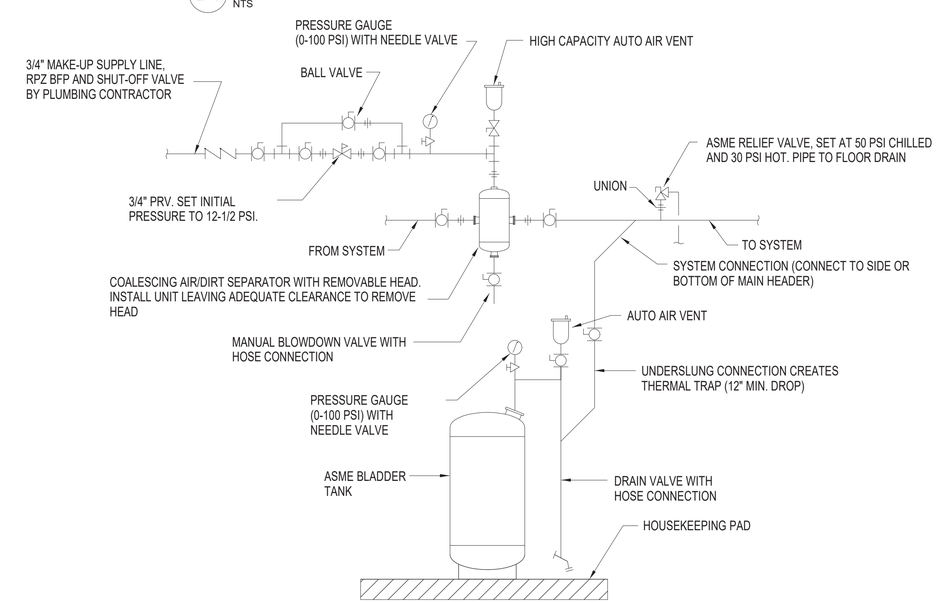

A3 HW & CHW AIR CONTROL PIPING DETAIL
NTS

SYM	DESCRIPTION	DATE	APPR

NAVFAC

NORTH CAROLINA PROFESSIONAL SEAL 056500 ENGINEER MICHAEL W. MERRIAM
05-08-26
SEAL

CRENSHAW CONSULTING Engineers
NC LICENSE #C-1164 www.crenshawconsulting.com 3836 Bush Street, Suite 200 Raleigh, North Carolina 27609 919-871-9270 Fax 871-5620

A/E INFO

APPROVED
FOR COMMANDER NAVFAC 5/13/2026
ACTIVITY

SATISFACTORY TO

DES	MPM	DRW	MAS	CHK	LWM
PM/DM					SLG/MDM
BRANCH MANAGER					WRB
CHIEF ENG/ARCH					JWJ
FIRE PROTECTION					HPN

DEPARTMENT OF THE NAVY
NAVAL FACILITIES ENGINEERING SYSTEMS COMMAND
MIDLANT DC CORE
MARINE CORPS BASE
NAVAL FACILITIES ENGINEERING SYSTEMS COMMAND ~ MIDATLANTIC
NAVAL STATION - NORFOLK, VA
CAMP LEJEUNE, NC
P-1550 SOF MARINE RAIDER BATTALION / COMPANY / TEAM FACILITIES
MECHANICAL DETAILS

SCALE: AS INDICATED
EPROJECT NO.: 1701820
CONSTR. CONTR. NO.

NAVFAC DRAWING NO. 12903825
A3
CO STG
SHEET 83 OF 122
M-504

FINAL SUBMITTAL
DRAWFORM REVISION: 25 AUGUST 2020

File Path: M:\Camp Lejeune\MARSOC SOF Marine Bn HQ_Team (P-1550)\A3 STORAGE
Print Date: 5/6/2026 5:15:48 PM

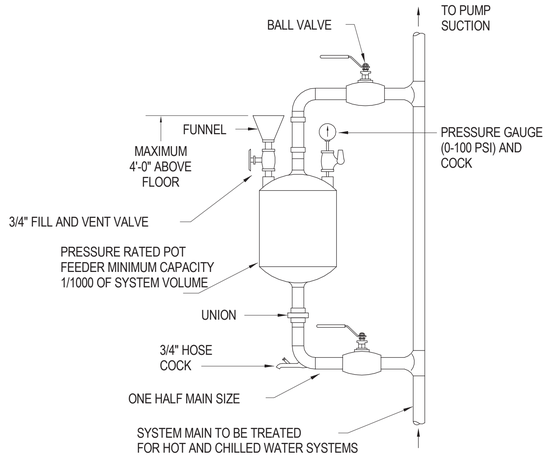

C1 SHOT FEEDER DETAIL
NTS

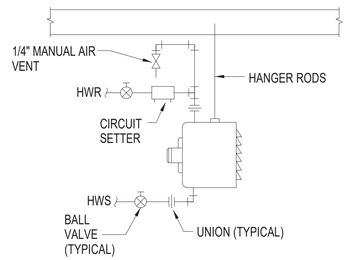

C2 HOT WATER UNIT HEATER DETAIL
NTS

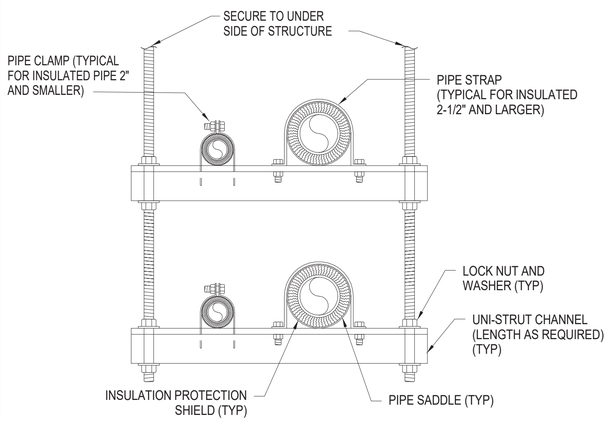

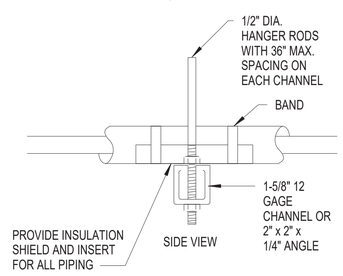

TRAPEZE HANGER FOR UP TO 1000 LBS. UNIFORM LOAD

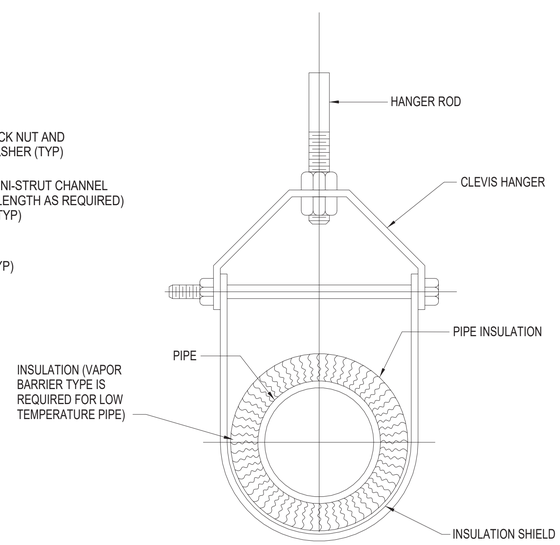

ADJUSTABLE CLEVIS HANGER

A1 TYPICAL PIPE HANGERS
NTS

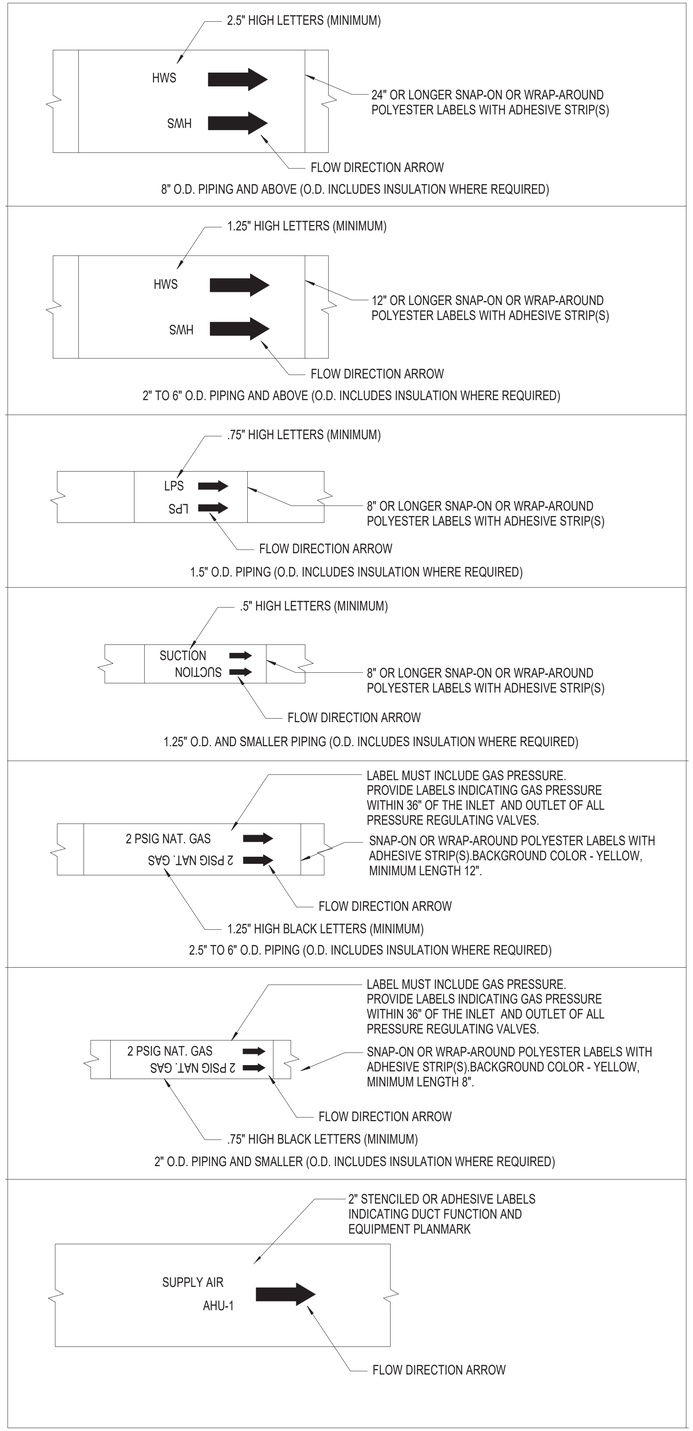

A3 PIPE/DUCT/EQUIPMENT IDENTIFICATION
NTS

LABEL TEXT AND COLOR LEGEND

PIPE SYSTEM DESCRIPTION	LETTER COLOR	BACKGROUND COLOR
HOT WATER SUPPLY	BLACK	YELLOW
HOT WATER RETURN	BLACK	YELLOW
CHILLED WATER SUPPLY	WHITE	GREEN
CHILLED WATER RETURN	WHITE	GREEN
NATURAL OR LP GAS	BLACK	YELLOW
REFRIGERANT SUCTION	WHITE	ORANGE
REFRIGERANT LIQUID	WHITE	ORANGE
MAKE-UP WATER	WHITE	GREEN
CHEMICAL SHOT FEEDER	BLACK	YELLOW

NOTES:

1. STENCIL OR LABEL COLORS MUST CONTRAST WITH THE DUCT SYSTEM COLOR. USE BLACK FOIL FACED DUCT INSULATION.

2. LABEL ALL ACCESSIBLE DUCT SYSTEMS AFTER EXITING A MECHANICAL ROOM OR CHASE AND BEFORE ENTERING A MECHANICAL ROOM OR CHASE.

3. LABEL DUCT SYSTEMS WHERE MULTIPLE DUCT SYSTEMS OCCUR IN A CONCENTRATED AREA OR CROSS PATHS. STENCIL PAINT MUST BE AN ALKYD BASED GLOSS OR SEMI-GLOSS.

4. CLEAN DUCTWORK PRIOR TO STENCILING OR APPLYING ADHESIVE LABELS.

MECHANICAL EQUIPMENT:

1. IN ADDITION TO STANDARD MANUFACTURER'S IDENTIFICATION PLATES, PROVIDE ENGRAVED LAMINATED PHENOLIC IDENTIFICATION PLATES FOR EACH PIECE OF MECHANICAL EQUIPMENT. SEE 23 30 00, SECTION 2.2 FOR MORE INFORMATION.

2. WHERE APPLICABLE, PROVIDE EQUIPMENT LABELING AT CEILING GRIDS BELOW ANY VAV TERMINAL UNITS OR ABOVE CEILING EQUIPMENT TO INDICATE LOCATIONS.

SYM	DESCRIPTION	DATE	APPR

NAVFAC

JOHN CARO SEAL 056500 PROFESSIONAL ENGINEER NICHOLAS J. MERANDA
05-08-26
SEAL

CRENSHAW CONSULTING Engineers
NC LICENSE #C-1562 www.crenshawconsulting.com 3516 Bush Street, Suite 200 Raleigh, North Carolina 27609 919-871-9270 Fax 871-5620

A/E INFO

APPROVED
SIGNATURE ON FILE
FOR COMMANDER NAVFAC 5/13/2026

ACTIVITY

SATISFACTORY TO

DES	MPM	DRW	MAS	CHK	LWM

PM/DM	SLG/MDM
BRANCH MANAGER	WRB
CHIEF ENG/ARCH	JWJ
FIRE PROTECTION	HPN

DEPARTMENT OF THE NAVY
NAVAL FACILITIES ENGINEERING SYSTEMS COMMAND
NAVAL FACILITIES ENGINEERING SYSTEMS COMMAND ~ MIDATLANTIC
MIDLANT DC CORE
NAVAL STATION - NORFOLK, VA
MARINE CORPS BASE
CAMP LEJEUNE, NC

P-1550 SOF MARINE RAIDER BATTALION / COMPANY / TEAM FACILITIES

MECHANICAL DETAILS

SCALE: AS INDICATED
EPROJECT NO.: 1701820
CONSTR. CONTR. NO.

NAVFAC DRAWING NO. 12903826
SHEET 84 OF 122

A3
CO STG
M-505

FINAL SUBMITTAL
DRAWFORM REVISION: 25 AUGUST 2020

File Path: M:\Camp Lejeune\MARSOC SOF Marine Bn HQ_Team (P-1550)\A3 STORAGE
Print Date: 5/6/2026 5:15:49 PM

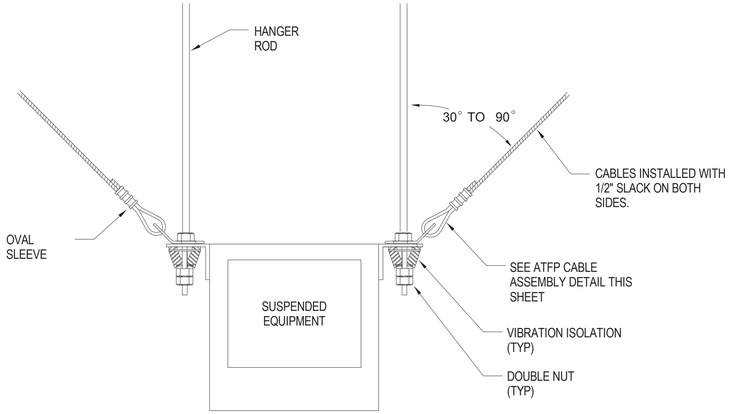

C1 ATFP ELEVATION
NTS

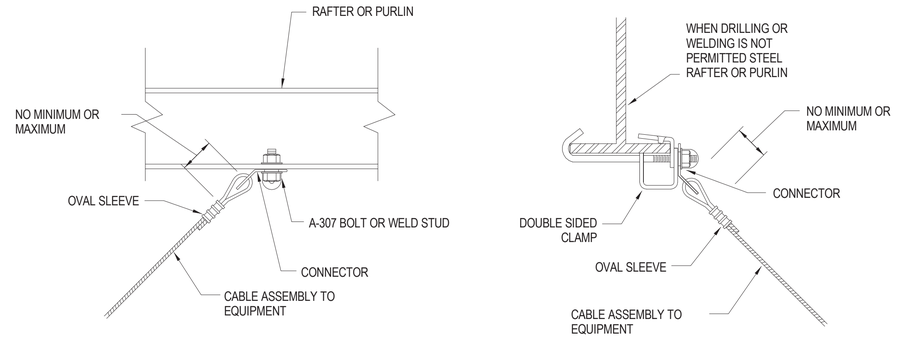

C2 ATFP CABLE BRACING ATTACHMENT TO STRUCTURE DETAIL
NTS

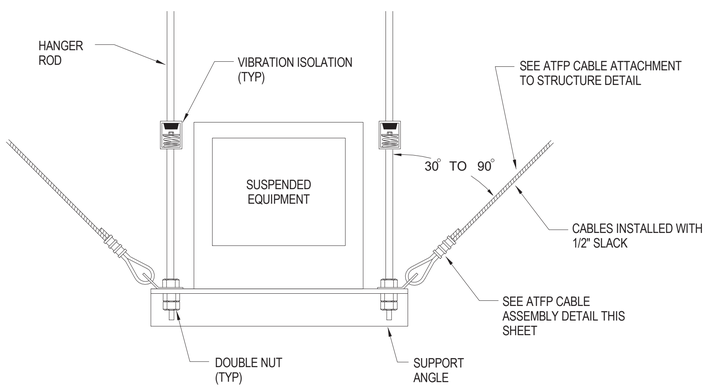

B1 ATFP ELEVATION
NTS

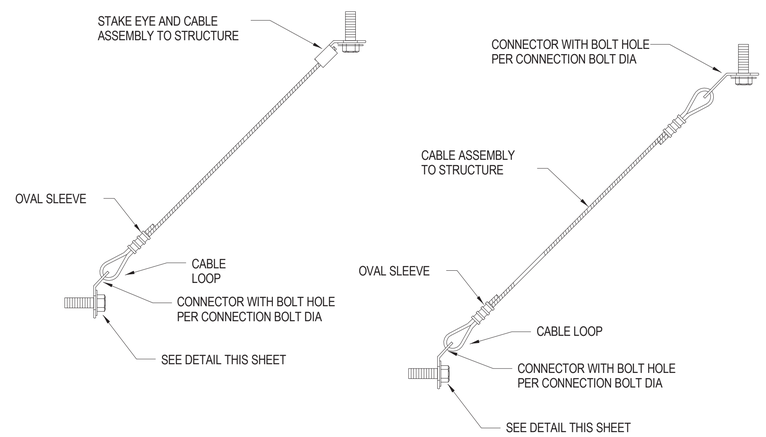

B2 ATFP CABLE BRACING ASSEMBLY DETAILS
NTS

SUSPENDED EQUIPMENT:

1. ALL SUSPENDED EQUIPMENT WEIGHING OVER 31 POUNDS MUST BE INSTALLED TO RESIST FORCES OF 0.5 TIMES THE EQUIPMENT WEIGHT IN ANY DIRECTION AND 1.5 TIMES THE EQUIPMENT WEIGHT IN THE DOWNWARD DIRECTION.
2. THESE DETAILS ARE PROVIDED AS GUIDANCE FOR THE SUPPORT OF SUSPENDED EQUIPMENT WEIGHING OVER 31 POUNDS.
3. EQUIPMENT INSTALLED IN EQUIPMENT ROOMS DOES NOT HAVE TO MEET THE ATFP STANDARDS FOR SUSPENDED EQUIPMENT.
4. CONTRACTOR MUST PROVIDE ON THE CONTRACT DRAWINGS AN ATFP BRACING FOR EQUIPMENT SCHEDULE AS SHOWN BELOW FOR ALL SUSPENDED EQUIPMENT WEIGHING 31 POUNDS AND OVER.

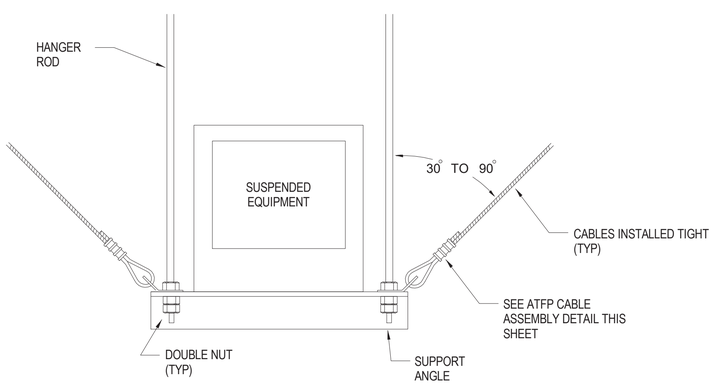

A1 ATFP ELEVATION
NTS

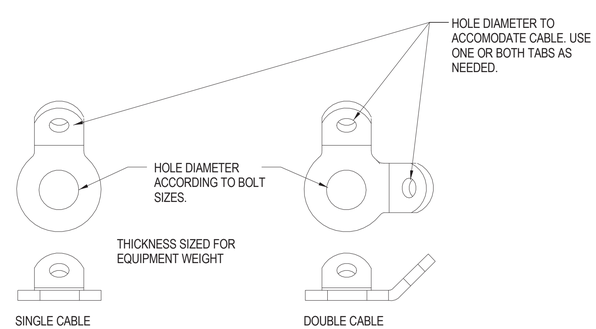

A2 ATFP BRACING CONNECTOR DETAIL
NTS

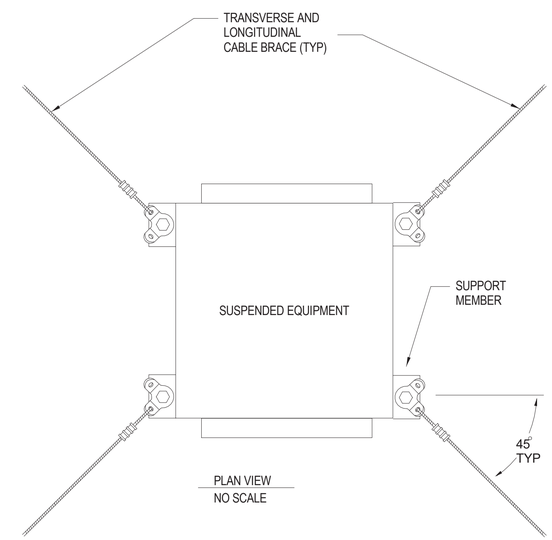

A4 ATFP BRACING DETAILS FOR SUSPENDED EQUIPMENT WITH INTERNAL VIBRATION ISOLATORS OR NO REQUIREMENT FOR VIBRATION ISOLATION
NTS

SYM	DESCRIPTION	DATE	APPR

NAVFAC

SEAL: 05-08-26

CRENSHAW CONSULTING Engineers
NC LICENSE #C-1164 | www.crenshawconsulting.com | 3836 Bush Street, Suite 200, Raleigh, North Carolina 27609 | 919-871-9270 Fax: 871-5620

A/E INFO

APPROVED
FOR COMMANDER NAVFAC 5/13/2026
ACTIVITY

SATISFACTORY TO
DES MPM | DRW MAS | CHK LWM
PM/DM SLG/MDM
BRANCH MANAGER WRB
CHIEF ENG/ARCH JWJ
FIRE PROTECTION HPN

DEPARTMENT OF THE NAVY
NAVAL FACILITIES ENGINEERING SYSTEMS COMMAND ~ MIDATLANTIC
MIDLANT DC CORE
MARINE CORPS BASE
NAVAL FACILITIES ENGINEERING SYSTEMS COMMAND
NAVAL STATION - NORFOLK, VA
CAMP LEJEUNE, NC

P-1550 SOF MARINE RAIDER BATTALION / COMPANY / TEAM FACILITIES

MECHANICAL DETAILS

SCALE: AS INDICATED
EPROJECT NO.: 1701820
CONSTR. CONTR. NO.

NAVFAC DRAWING NO. 12903827
SHEET 85 OF 122
A3
CO STG
M-506

FINAL SUBMITTAL
DRAWFORM REVISION: 25 AUGUST 2020

File Path: M:\Camp Lejeune\MARSOC SOF Marine Bn HQ_Team (P-1550)\A3 STORAGE
Print Date: 5/6/2026 5:15:53 PM

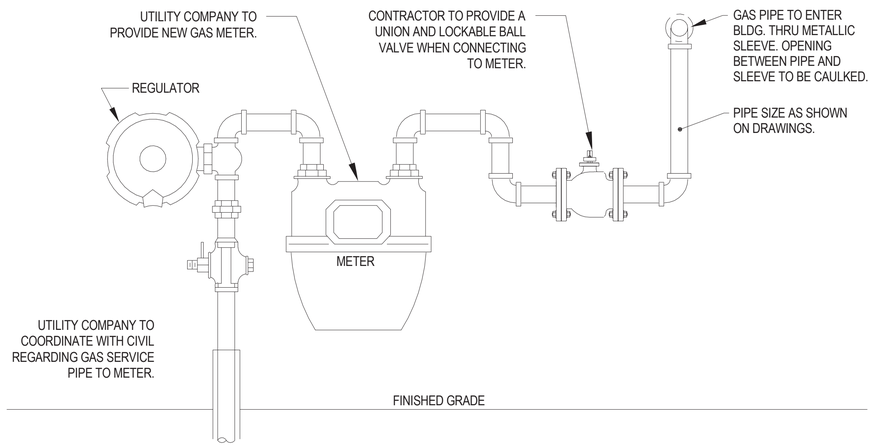

C1 GAS METER CONNECTION DETAIL
NTS

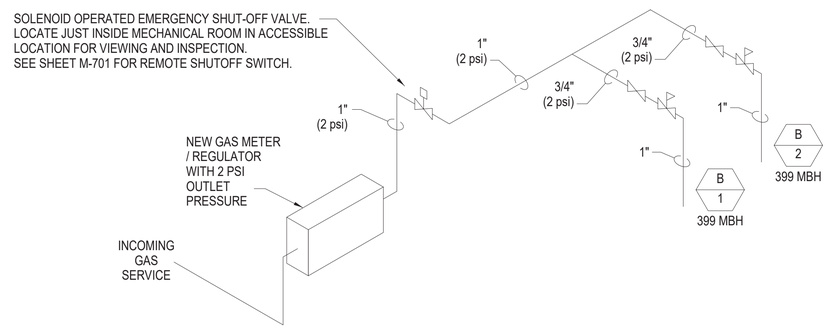

GAS PIPING SIZES UPSTREAM OF MP REGULATORS BASED ON AN INITIAL PRESSURE OF 2 PSI, A PRESSURE DROP OF 3 IN. W.C., 0.6 SPECIFIC GRAVITY GAS AND SCHEDULE 40 PIPE. SIZES BASED ON TABLE 6.2(c) OF 2015 NFPA 54. GAS PIPING SIZES DOWNSTREAM OF MP REGULATORS ARE BASED ON A LOW PRESSURE SYSTEM (< 2 PSI), A PRESSURE DROP OF 0.5" WATER COLUMN, 0.6 SPECIFIC GRAVITY GAS AND SCHEDULE 40 PIPE. SIZES BASED ON TABLE 6.2(b) OF 2015 NFPA 54.

GAS RISER NOTES:

1. PROVIDE MANUAL SHUTOFF VALVE FOR EACH PIECE OF GAS EQUIPMENT.
2. CONTRACTOR MUST VERIFY GAS REQUIREMENTS FOR EACH PIECE OF EQUIPMENT PRIOR TO INSTALLING GAS PIPING. CONFIRM EQUIPMENT WITH OWNER.
3. GAS PIPING MUST BE SCHEDULE 40 ASTM A53 OR A120, T&C. WHERE EXPOSED TO WEATHER, PAINT TO PREVENT CORROSION. INSTALL PER NFPA 54.
4. MECHANICAL CONTRACTOR TO VERIFY METER LOCATION AND MAXIMUM LINE LENGTHS PRIOR TO INSTALLATION. IF CONDITIONS VARY FROM THOSE SHOWN ON THE DRAWINGS, CONTACT ENGINEER FOR LINE SIZING.
5. A LISTED SHUTOFF VALVE MUST BE INSTALLED IMMEDIATELY AHEAD OF EACH MP REGULATOR.
6. MP REGULATORS MUST BE INSTALLED AND VENTED IN ACCORDANCE WITH CHAPTER 5 OF 2015 NFPA 54. USE VENTLESS REGULATORS TO AVOID INSTALLING VENT PIPING.
7. A TEST TEE FITTING MUST BE INSTALLED BETWEEN THE MP REGULATOR AND ITS UPSTREAM SHUTOFF VALVE. A SEPARATE TEST TEE FITTING MUST BE INSTALLED NOT LESS THAN 10 PIPE DIAMETERS DOWN STREAM OF THE MP REGULATOR OUTLET. PROVIDE TEST TEE FITTINGS FOR ANY NEW OR EXISTING MP REGULATORS.
8. THE MECHANICAL CONTRACTOR TO COORDINATE ALL EQUIPMENT AND ALL REGULATORS WITH THE GAS COMPANY.
9. ALL EXTERIOR ABOVE GROUND GAS PIPING, AFTER THE GAS UTILITY METER, MUST BE STEEL. ALL GAS PIPING INSIDE THE BUILDING MUST BE STEEL. ALL EXTERIOR BELOW GROUND GAS PIPING MUST BE PLASTIC. PROVIDE STEEL-TO- PLASTIC PIPING RISERS WHERE EXTERIOR PLASTIC PIPE RISES OUT THE THE GROUND. SEE SPEC SECTION 23 11 20 FOR FURTHER INFO.

A3 GAS RISER DETAIL
NTS

GAS CONNECTED LOAD

MARK	EQUIPMENT	BTUH INPUT	CFH
B-1	CONDENSING BOILER	399,000	377
B-2	CONDENSING BOILER	399,000	377
	TOTAL	798,000	754

MAXIMUM EQUIVALENT LENGTH FROM GAS REGULATOR/METER TO MOST REMOTE REGULATOR = 20'

MAXIMUM EQUIVALENT LENGTH FROM REGULATOR TO MOST REMOTE APPLIANCE = 20'

SYM	DESCRIPTION	DATE	APPR

NAVFAC

NORTH CAROLINA PROFESSIONAL SEAL 056500 ENGINEER JACK W. MERRIMAN
05-08-26
SEAL

CRENSHAW CONSULTING Engineers
NC LICENSE #C-1582 www.crenshawconsulting.com 3836 Bush Street, Suite 200 Raleigh, North Carolina 27609 919-871-9270 Fax 871-5620

A/E INFO

APPROVED
FOR COMMANDER NAVFAC 5/13/2026
ACTIVITY

SATISFACTORY TO

DES	MPM	DRW	MAS	CHK	LWM
PM/DM	SLG/MDM				
BRANCH MANAGER	WRB				
CHIEF ENG/ARCH	JWJ				
FIRE PROTECTION	HPN				

DEPARTMENT OF THE NAVY
NAVAL FACILITIES ENGINEERING SYSTEMS COMMAND
MIDLANT DC CORE
MARINE CORPS BASE
NAVAL FACILITIES ENGINEERING SYSTEMS COMMAND ~ MIDATLANTIC
NAVAL STATION - NORFOLK, VA.
CAMP LEJEUNE, NC
P-1550 SOF MARINE RAIDER BATTALION / COMPANY / TEAM FACILITIES
MECHANICAL DETAILS

SCALE: AS INDICATED
EPROJECT NO.: 1701820
CONSTR. CONTR. NO.

NAVFAC DRAWING NO. 12903828
SHEET 86 OF 122
A3
CO STG
M-507
FINAL SUBMITTAL
DRAWFORM REVISION: 25 AUGUST 2020

File Path: M:\Camp Lejeune\MARSOC SOF Marine Bn HQ_Team (P-1550)\A3 STORAGE
Print Date: 5/6/2026 5:15:57 PM

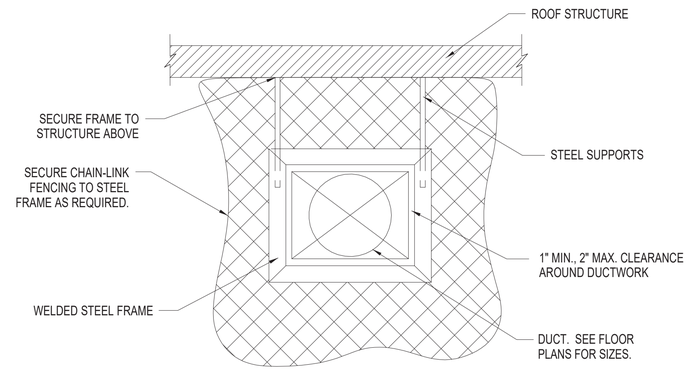

C3 DUCT THROUGH FENCE DETAIL
NTS

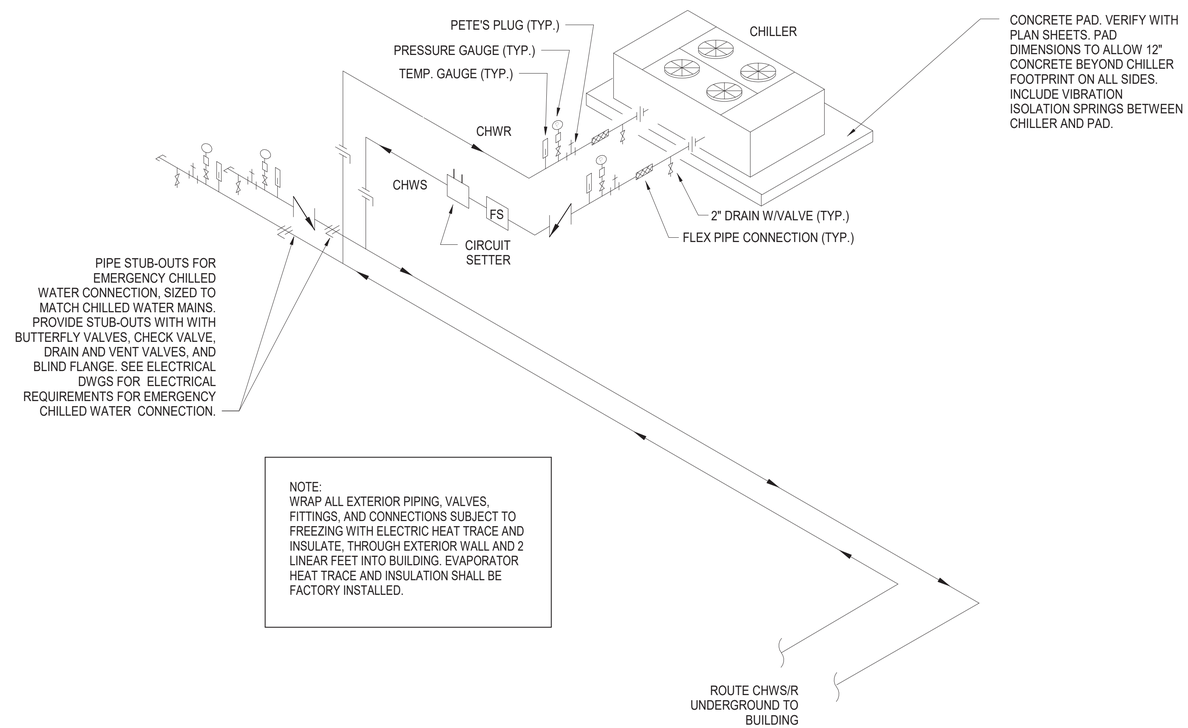

NOTE:
WRAP ALL EXTERIOR PIPING, VALVES, FITTINGS, AND CONNECTIONS SUBJECT TO FREEZING WITH ELECTRIC HEAT TRACE AND INSULATE, THROUGH EXTERIOR WALL AND 2 LINEAR FEET INTO BUILDING. EVAPORATOR HEAT TRACE AND INSULATION SHALL BE FACTORY INSTALLED.

A3 AIR COOLED CHILLER INSTALLATION DETAIL
NTS

SYM	DESCRIPTION	DATE	APPR

NAVFAC

NORTH CAROLINA PROFESSIONAL SEAL 056500 ENGINEER MICHAEL W. MERRIAM
05-08-26
SEAL

CRENSHAW CONSULTING Engineers
NC LICENSE #C-1582
www.crenshawconsulting.com
3516 Bush Street, Suite 200
Raleigh, North Carolina 27609
919-871-9270 Fax 871-5620

A/E INFO

APPROVED
SIGNATURE OF CO
FOR COMMANDER NAVFAC 5/13/2026
ACTIVITY

SATISFACTORY TO
DES MPM | DRW MAS | CHK LWM
PM/DM SLG/MDM
BRANCH MANAGER WRB
CHIEF ENG/ARCH JWJ
FIRE PROTECTION HPN

DEPARTMENT OF THE NAVY
NAVAL FACILITIES ENGINEERING SYSTEMS COMMAND
NAVAL FACILITIES ENGINEERING SYSTEMS COMMAND ~ MIDATLANTIC
MIDLANT DC CORE
NAVAL STATION - NORFOLK, VA
MARINE CORPS BASE
CAMP LEJEUNE, NC
P-1550 SOF MARINE RAIDER BATTALION / COMPANY / TEAM FACILITIES
MECHANICAL DETAILS

SCALE: AS INDICATED
EPROJECT NO.: 1701820
CONSTR. CONTR. NO.

NAVFAC DRAWING NO.
12903829
SHEET 87 OF 122
A3
CO STG
M-508

FINAL SUBMITTAL
DRAWFORM REVISION: 25 AUGUST 2020

File Path: M:\Camp Lejeune\MARSOC SOF Marine Bn HQ_Team (P-1550)\A3 STORAGE
Print Date: 5/6/2026 5:15:58 PM

SEISMIC

BUILDING RISK CATEGORY	II
WIND EXPOSURE CATEGORY	B
SEISMIC DESIGN CATEGORY	B
SEE STRUCTURAL PLANS FOR FURTHER INFORMATION	

DESIGN CONDITIONS

OUTDOOR DESIGN CONDITIONS

SEASON	DB/WB (°F)
SUMMER	91.0 / 77.0 (1% ASHRAE)
WINTER	22.0 (99.6% ASHRAE)

DEHUMIDIFICATION CONDITIONS

MCDB (°F)	W (grains H2O/lbm dry air)
84	140

INDOOR DESIGN CONDITIONS

SPACE TYPE	SEASON	OCCUPIED	UNOCCUPIED	RELATIVE HUMIDITY
ELECTRICAL*	COOLING	80°F (MAX)	-	0-85%
	HEATING	50°F (MIN)	-	0-85%
SPRINKLER	COOLING	80°F (MAX)	-	0-85%
	HEATING	50°F (MIN)	-	0-85%
MECHANICAL	COOLING	80°F (MAX)	-	8% (MIN)
	HEATING	50°F (MIN)	-	8% (MIN)
TELECOM ROOM	COOLING	68°F	-	80% (MAX)
ALL OTHER	COOLING	76°F	82°F	50%
	HEATING	70°F	55°F	30-50%

*EXTERIOR OR PRIMARY ELECTRICAL EQUIPMENT ROOMS ONLY. OTHERWISE FOLLOW UFC 3-410-01.

**PER NFPA 72 10.3.5. FOLLOW THIS OR MANUFACTURER'S REQUIREMENTS, WHICHEVER IS MORE STRINGENT.

DUCT CONSTRUCTION AND LEAKAGE TESTING TABLE

LOCATION	DUCT PRESSURE CLASS INCHES OF WATER				SA (2-3 IN. W.C.) ROUND / OVAL		SA (2-3 IN. W.C.) RECTANGULAR		EA/SA (<= 1 IN. W.C.) ROUND / OVAL		EA/SA (<= 1 IN. W.C.) RECTANGULAR		RA DUCT ROUND / OVAL		RA DUCT RECTANGULAR		OA DUCT ROUND / OVAL		OA DUCT RECTANGULAR		DUCT TEST PRESSURE INCHES OF WATER COLUMN	REMARKS
	SA DUCT	RA DUCT	EA DUCT	OA DUCT	DUCT SEAL CLASS	DUCT LEAK CLASS	DUCT SEAL CLASS	DUCT LEAK CLASS	DUCT SEAL CLASS	DUCT LEAK CLASS	DUCT SEAL CLASS	DUCT LEAK CLASS	DUCT SEAL CLASS	DUCT LEAK CLASS	DUCT SEAL CLASS	DUCT LEAK CLASS	DUCT SEAL CLASS	DUCT LEAK CLASS	DUCT SEAL CLASS	DUCT LEAK CLASS		
AHU-1 - VAV	2	-	-	-	A	8	A	16	-	-	-	-	-	-	-	-	-	-	-	-	2	1,2
	-	-2	-	-	-	-	-	-	-	-	-	-	A	8	A	16	-	-	-	-	2	1,2
	-	-	-1	-	-	-	-	-	A	8	A	16	-	-	-	-	-	-	-	-	1	1,2,3
	-	-	-	1	-	-	-	-	-	-	-	-	-	-	-	-	A	8	A	16	1	1,2

REMARKS:
1. TEST IN ACCORDANCE WITH SPECIFICATION SECTION 23 05 93 TESTING, ADJUSTING, AND BALANCING FOR HVAC, AND WITH THE PROCEDURES IN SMACNA 016 HVAC AIR DUCT LEAKAGE TEST MANUAL.
2. UTILIZE DUCT LEAKE CLASSES INDICATED IN THIS TABLE FOR THE LISTED DUCT PRESSURE CLASSES AND DUCT SEAL CLASS.
3. TESTING MAY BE DONE AT POSITIVE PRESSURE FOR NEGATIVE SYSTEMS.

AHU-1 VENTILATION SCHEDULE AND AIR BALANCE (ASHRAE 62.1 - 2016)

ZONE	Occupancy Category	ZONE FLOOR AREA	ZONE POPULATION	PEOPLE OUTDOOR AIR RATE	AREA OUTDOOR AIR RATE	BREATHING ZONE OUTDOOR AIRFLOW	BREATHING ZONE OUTDOOR AIRFLOW	BREATHING ZONE OUTDOOR AIRFLOW	ZONE AIRE DISTRIBUTION EFFECTIVENESS	ZONE OUTDOOR AIRFLOW	PRIMARY OUTDOOR AIR FRACTION	ZONE VENTILATION EFFICIENCY (APPENDIX A)	SA CFM	RA CFM	EA RATE		EA CFM	TRANSFER AIR CFM	TOTAL Δ CFM
		Az	*Pz*	*Rp*	*Ra*	(Rp * Az)	(Ra * Pz)	*Vbz*	*Ez*	*Voz*	*Zpz*	*Evz*							
		(sq ft)	(people)	(cfm per person)	(cfm per sq ft)	(cfm)	(cfm)	(cfm)		(cfm)									
101 OPEN STORAGE	MULTI-PURPOSE ASSEMBLY	10536	120	5	0.06	600	632	1232	0.8	1540	0.32	0.93	8025					-8025	0
108 OPEN STORAGE	MULTI-PURPOSE ASSEMBLY	3651	20	5	0.06	100	219	319	0.8	399	0.33	0.92	2100	8375			1200	8375	900
111 ELECTRICAL		294	0	0	0	0	0	0	0.8	0	0		350	350				0	0
112 SPRINKLER		273	0	0	0	0	0	0	0.8	0	0		0					0	0
114 JANITOR		50	0	0	0	0	0	0	0.8	0	0		0				50	0	-50
115 UNISEX	RESTROOM	64	0	0	0	0	0	0	0.8	0	0		50		75	UNIT	100	0	-50
116 STORAGE	STORAGE	87	0	5	0.06	0	5	5	0.8	7	0.07		100				100	0	0
119 BFP	STORAGE	48	0	5	0.12	0	6	6	0.8	7	0.29	0.96	25					0	25
117 ELECTRICAL		78	0	0	0	0	0	0	0.8	0	0		25				100	0	-75
118 UNISEX	RESTROOM	63	0	0	0	0	0	0	0.8	0	0		50		75	UNIT	100	0	-50
													10725	8725			1650		700
														8725					

UNCORRECTED OUTDOOR INTAKE (Vou)	1562
MINIMUM (Evz)	0.92
CRITICAL ZONE	108 OPEN STORAGE
VENTILATION EFFICIENCY (Ev)	0.92
OUTDOOR INTAKE REQUIRED (Vot = Vou / Ev)	1698
OUTDOOR AIR PROVIDED	2000

BUILDING AIR BALANCE CALCULATION

AREA	OUTSIDE AIR (CFM)	EXHAUST AIR (CFM)	REMARKS
AHU-1	2000	1600	1

REMARKS
1. OVERALL BUILDING PRESSURIZATION IS POSITIVE.

SYM	DESCRIPTION	DATE	APPR

NAVFAC

SEAL

CRENSHAW CONSULTING ENGINEERS
NC LICENSE #C-1162 www.crenshawconsulting.com 3816 Bush Street, Suite 200 Raleigh, North Carolina 27609 919-871-9270 Fax: 871-5620

A/E INFO

APPROVED
FOR COMMANDER NAVFAC 5/13/2026
ACTIVITY

SATISFACTORY TO
DES MPM DRW MAS CHK LWM
PM/DM SLG/MDM
BRANCH MANAGER WRB
CHIEF ENG/ARCH JWJ
FIRE PROTECTION HPN

DEPARTMENT OF THE NAVY
NAVAL FACILITIES ENGINEERING SYSTEMS COMMAND
MIDLANT DC CORE
MARINE CORPS BASE
NAVAL FACILITIES ENGINEERING SYSTEMS COMMAND ~ MIDATLANTIC
NAVAL STATION - NORFOLK, VA
CAMP LEJEUNE, NC
P-1550 SOF MARINE RAIDER BATTALION / COMPANY / TEAM FACILITIES
MECHANICAL SCHEDULES

SCALE: AS INDICATED
EPROJECT NO.: 1701820
CONSTR. CONTR. NO.
NAVFAC DRAWING NO. 12903830
SHEET 88 OF 122
A3
CO STG
M-601

FINAL SUBMITTAL
DRAWFORM REVISION: 25 AUGUST 2020

File Path: M:\Camp Lejeune\MARSOC SOF Marine Bn HQ_Team (P-1550)\A3 STORAGE
Print Date: 5/6/2026 5:15:59 PM

AIR HANDLING UNIT SCHEDULE

MARK	SUPPLY FAN SA CFM MAX	SUPPLY FAN SA CFM MIN	SUPPLY FAN E.S.P. "WC	SUPPLY FAN T.S.P. "WC	SUPPLY FAN RA CFM MAX	SUPPLY FAN RA CFM MIN	SUPPLY FAN OA CFM MIN	SUPPLY FAN BHP	EXHAUST FAN EA CFM	EXHAUST FAN E.S.P. "WC	EXHAUST FAN T.S.P. "WC	EXHAUST FAN BHP	PREHEAT HEATING COIL SECTION (HOT WATER) CAP. MBH	PREHEAT OA EAT (DB) °F	PREHEAT OA LAT (DB) °F	PREHEAT EWT/LWT °F	PREHEAT WATER PD FT. MAX	PREHEAT GPM 4.8	COOLING COIL SECTION (CHILLED WATER) CAPACITY TOTAL	CAPACITY SENS.	OA EAT (DB) °F	OA EAT (WB) °F	RA EAT (DB) °F	RA EAT (WB) °F	MA EAT (DB) °F	MA EAT (WB) °F	EAH	CC LA LAT (DB) °F	CC LA LAT (WB) °F	LAH	WATER TEMP. (°F) EWT	WATER TEMP. (°F) LWT	WATER PD FT. MAX	AIR VEL. FPM, MAX	MIN. NUM. OF ROWS	GPM	REHEAT HEATING COIL SECTION (HW) CAP. MBH	REHEAT EAT/LAT °F	REHEAT EWT/LWT °F	REHEAT WATER PD FT. MAX	REHEAT GPM	ELECTRICAL SUPPLY MCA/MOP	ELECTRICAL EXHAUST MCA/MOP	ELECTRICAL MARINE LIGHTS MCA/MOP	ELECTRICAL V/PH	UNIT WEIGHT (LBS)	VIBRATION ISOLATION TYPE	REMARKS
AHU-1	10725	5350	1.25	4.92	8725	3350	2000	3 @ 6.03	1600	1.00	1.99	4.02	71.3	22.0	55.0	140 / 110	5.00	4.8	400.1	277.0	91.0	77.0	76.0	63.4	78.8	66.3	30.9	55.0	54.0	22.6	44.0	54.0	5.00	500	6	80.0	463.3	55.0 / 95.0	140 / 110	5.0	30.89	44.5 / 50.0	11.6 / 20.0	3.3 / 15.0	208/3	6900	D	1-13
																			417.0	261.8	84.0	78.6	76.0	63.4	77.5	66.6	31.3	55.0	54.0	22.6	44.0	54.0	5.00	500	6	83.4											
													71.3					**4.8**	**417.0**																	**83.4**	**463.3**				**30.9**						

REMARKS:

1. PROVIDE WITH 2" MERV 8 FILTERS ON THE EXHAUST AND 2" MERV 8 PREFILTERS & 2" MERV 13 FINAL FILTERS ON THE RETURN AND OUTSIDE AIR INTAKE. SCHEDULED TOTAL STATIC PRESSURE (TSP) INCLUDES FILTER LOADING AT MID-LIFE OPERATION.
2. PROVIDE PREMIUM EFFICIENCY MOTORS FOR SUPPLY AND EXHAUST FANS, COMPATIBLE WITH VARIABLE AIR VOLUME (VAV) OPERATION.
3. PROVIDE WITH CLASS 1A LOW LEAKAGE DAMPERS ON THE EXHAUST DISCHARGE AND OUTSIDE AIR INTAKE UNIT CONNECTIONS. DAMPERS MUST BE HARDWIRED TO ATFP SWITCH.
4. PROVIDE UNIT WITH VERTICAL SUPPLY DISCHARGE, EXHAUST INLET, RETURN INLET AND OUTSIDE AIR INLET DUCT CONNECTION AND HORIZONTAL EXHAUST DISCHARGE DUCT CONNECTIONS. UNIT MUST HAVE 2" DOUBLE WALL CONSTRUCTION.
5. CONTRACTOR MUST VERIFY THAT UNIT CAN BE INSTALLED IN LOCATION SHOWN ON DRAWINGS PRIOR TO SUBMITTING FOR APPROVAL.
6. PROVIDE 6000 HR SALT SPRAY PROTECTIVE COATING FOR ALL COIL SECTIONS.
7. UNIT MUST HAVE CROSSFLOW FIXED PLATE TOTAL ENTHALPY HEAT EXCHANGER.
8. PROVIDE UNIT WITH SEPARATE POWER CONNECTIONS FOR THE SUPPLY FAN, THE EXHAUST FAN AND THE MARINE LIGHTS. PROVIDE MARINE LIGHTS FOR ALL SECTIONS FAN AND ACCESS SECTIONS.
9. COIL CAPACITIES MUST BE DESIGNED AROUND HEAT EXCHANGER FAILURE. UNIT MUST MEET CAPACITY AND PERFORMANCE REQUIREMENTS AT BOTH OUTDOOR AMBIENT CONDITIONS SCHEDULED.
10. MAXIUMUM ALLOWABLE DISCHARGE OR RADIATED NOISE CRITERIA (NC) = 30.
11. EQUIPMENT SUPPORTS TO HAVE VIBRATION ISOLATION. SEE VIBRATION ISOLATION DETAIL FOR MORE INFORMATION.
12. AIR HANDLER DESIGNED WITH A FOULING FACTOR OF 0.00025 FT^2-HR-°F/BTU FOR ALL COILS.
13. REFER TO CONTROL VALVE SCHEDULE FOR MORE INFORMATION.

TOTAL ENERGY HEAT EXCHANGER

MARK	SUMMER OA DB	SUMMER OA WB	SUMMER EA DB	SUMMER EA %RH	SUMMER SA DB	SUMMER SA WB	WINTER OA DB	WINTER OA WB	WINTER EA DB	WINTER EA %RH	WINTER SA DB	WINTER SA WB	HX EFF. SUMMER/ WINTER %
AHU-1	84.0	78.6	76.0	50.0	80.0	71.6	22.0	19.1	70.0	35.0	46.0	39.0	50.0%
HX EFFECTIVENESS VALUES SHOWN ARE MINIMUM PERFORMANCE REQUIREMENTS.													

LOUVER SCHEDULE

MARK	SERVES	FLOW	SIZE WxH (in.)	FREE AREA REQUIRED (s.f.)	MAX AIR VELOCITY (fpm)	CFM	MAX AIR PD	REMARKS
L-1	AHU-1	EXHAUST	40X24	1.78	900	1600	0.15	1,2,3,4
L-2	AHU-1	INTAKE	48X24	2.86	700	2000	0.15	1,2,3,4
L-3	EF-1	EXHAUST	26X14	0.61	900	550	0.15	1,2,3,4
L-4	EF-1	INTAKE	26X14	0.79	700	550	0.15	1,2,3,4

REMARKS :

1. PROVIDE FULL SIZE PLENUM BEHIND LOUVER AND PAINT INSIDE OF PLENUM FLAT BLACK
2. PROVIDE ALL ALUMINUM LOUVER WITH CLEAR ANODIZED FINISH AND DRAINABLE BLADES.
3. PROVIDE WITH ALUMINUM BIRDSCREEN.
4. MAXIMUM ALLOWABLE DISCHARGE OR RADIATED NOISE CRITERIA (NC) = 30.

AIR DISTRIBUTION SCHEDULE

MARK	DESCRIPTION	THROW	CEILING MODULE SIZE	NECK SIZE	MINIMUM CFM	MAXIMUM CFM	MAX. NC	REMARKS
S1	SQUARE PLAQUE FACE DIFFUSER	4 WAY	24x24	6"ø	50 CFM	100 CFM	30	1,2,3,4
S2	LOUVERED GRILLE, 3/4" SPACING, DOUBLE DEFLECTION	2 WAY	N/A	18x8	250 CFM	400 CFM	30	2,3
S3	LOUVERED GRILLE, 3/4" SPACING, DOUBLE DEFLECTION	2 WAY	N/A	8X4	25 CFM	25 CFM	30	2,3
S4	LOUVERED GRILLE, 3/4" SPACING, DOUBLE DEFLECTION	2 WAY	N/A	8X4	25 CFM	25 CFM	30	2,3
E1	PERFORATED EXHAUST DIFFUSER	NA	24x24	8"ø	100 CFM	100 CFM	30	1,2,3,4
E2	LOUVERED GRILLE, 3/4" SPACING	NA	N/A	30x12	1200 CFM	1200 CFM	30	2,3
E3	LOUVERED GRILLE, 3/4" SPACING	NA	N/A	10X4	100 CFM	100 CFM	30	2,3
R1	LOUVERED GRILLE, 3/4" SPACING	NA	N/A	22x22	1150 CFM	1450 CFM	30	2,3
R2	LOUVERED GRILLE, 3/4" SPACING	NA	N/A	12X12	350 CFM	350 CFM	30	2,3

REMARKS

1. VERIFY ALL CEILING TYPES WITH ARCHITECTURAL PLANS TO DETERMINE MOUNTING DETAILS AND ACCESSORIES REQUIRED. COORDINATE COLOR WITH ARCHITECT.
2. PROVIDE WITH SQUARE TO ROUND TRANSITION AS NECESSARY.
3. ALL AIR DISTRIBUTION MUST BE 100% ALUMINUM CONSTRUCTION.
4. PROVIDE BLANKET INSULATION ON THE BACK OF ALL DIFFUSERS.

FAN SCHEDULE

MARK	AREA SERVED	TYPE	CFM	ESP (IN. H20)	MOTOR SIZE	RPM	DRIVE	SONES	VOLT/PH	WEIGHT (LBS)	VIBRATION ISOLATION TYPE	REMARKS
EF-1	HOT MECH 110	INLINE	550	0.125	368 W	1035	DIRECT	27	120/1	40	E	1,2,3,4,5,6

REMARKS:

1. PROVIDE FAN WITH BACKDRAFT DAMPER AND HANGING ISOLATOR KIT. SUPPORT FAN FROM STRUCTURE.
2. PROVIDE FAN WITH ELECTRONIC SPEED CONTROLLER.
3. PROVIDE WITH EQUIPMENT RAILS AND VIBRATION ISOLATION.
4. FAN TO BE CONTROLLED BY WALL MOUNTED, LINE VOLTAGE THERMOSTAT PROVIDED BY MECHANICAL CONTRACTOR.
5. REFER TO CONTROLS DETAILS AND SCHEMATICS FOR SEQUENCING OF FAN.
6. MAXIMUM ALLOWABLE DISCHARGE OR RADIATED NOISE CRITERIA (NC) = 30.

DUCTLESS SPLIT SYSTEM AIR HANDLING UNIT SCHEDULE

MARK	SERVES	TYPE	NOMINAL TONS	SOUND LVL, dB	MCA	REFRIG. TYPE	WEIGHT (LBS)	REMARKS
DAC-1	COMM 113	HP	1	45	1.0	R-32	35	1,2,3,4,5
DAC-2	ELEC 111	HP	1	45	1.0	R-32	35	1,2,3,4,5

REMARKS:

1. PROVIDE UNIT WITH WIRED WALL MOUNTED THERMOSTAT, AND CLEANABLE TYPE FILTERS.
2. PROVIDE UNIT WITH WALL MOUNTED CONDENSATE PUMP, WIRED TO MOTOR RATED SWITCH.
3. AHU IS POWERED FROM CONDENSING UNIT.
4. DUCTLESS SPLIT SYSTEM MUST BE CAPABLE OF HANDLING 100 FEET OF REFRIGERANT LINE BETWEEN AC AND CU.
5. PROVIDE CONDENSATE PUMP FOR USE WITH UNIT.

ASHRAE STANDARD 15 REFRIGERANT COMPLIANCE CALCULATION

CONDENSING UNIT	REFRIGERANT NUMBER	RCL (lb/1000 ft³)	LFL (lb/1000 ft³)	CF	FOCC	ROOM	ROOM AREA ft2	ROOM HEIGHT ft	WITHOUT AIR CIRCULATION (SECTION 7.6.1.2) Mdef (TABLE 7.1) (lb)	FLFL	EFFECTIVE DISPERSAL VOLUME CHARGE (EDVC) (sect 7.6.1.2) (lb)	SYSTEM CHARGE (Ms) (lb)	RELEASABLE CHARGE (Mrel) (lb)	RELEASABLE CHARGE ≤ EDVC?	REMARKS
DAC-1	R-454B	3.2	22.0	0.5	1.0	113 COMM	109.0	12.0	9.40	0.9	8.5	4.30	4.30	YES	1,2
	R-32	4.8	19.1	0.5	1.0				9.40	1.0	9.4			YES	1,2
DAC-2	R-454B	3.2	22.0	0.5	1.0	112 SPRINKLER	273.0	16.0	17.20	0.9	15.5	4.30	4.30	YES	1,2
	R-32	4.8	19.1	0.5	1.0				17.20	1.0	17.2			YES	1,2

REMARKS:

1. ASHRAE 34-2024, TABLE 4-1 & 4-2: REFRIGERANT IS CLASSIFIED AS NEITHER TOXIC OR HIGHLY TOXIC, WITH A REFRIGERANT CONCENTRATION LIMIT (RCL), LOWER FLAMMABILITY LIMIT (LFL) PER SCHEDULED VALUES.
2. EFFECTIVE DISPERSAL VOLUME CHARGE (EDVC) IS CALCULATED PER ASHRAE 15-2024, SECTION 7.6 (R-454B & R-32). Mdef VALUE INTERPOLATED USING VALUES FROM TABLE 7-1.

DUCTLESS SPLIT SYSTEM CONDENSING UNIT SCHEDULE

MARK	SERVES	NOMINAL TONS	TYPE	SEER	VOLT/PH	MCA	MOCP	SOUND LVL, dB	WEIGHT (LBS)	REMARKS
DCU-1	COMM 113	1	HP	21.4	208/1	16	27	47	100	1,2
DCU-2	SPRINKLER 112	1	HP	21.4	208/1	16	27	47	100	1,2

REMARKS:

1. PROVIDE ALL ACCESSORIES REQUIRED FOR LOW AMBIENT OPERATION TO 0ºF. PROVIDE COIL GUARDS AND 6,000 SALT-HOUR SEACOAST CONSTRUCTION. COATINGS MUST NOT REDUCE UNIT PERFORMANCE BELOW SCHEDULED QUANTITIES.
2. DUCTLESS SPLIT SYSTEM MUST BE CAPABLE OF HANDLING 100 FEET OF REFRIGERANT LINE BETWEEN AC AND CU.

SYM	DESCRIPTION	DATE	APPR

NAVFAC

NORTH CAROLINA PROFESSIONAL SEAL 056500 ENGINEER WILLIAM J. MERRIGAN 05-08-26 SEAL

CRENSHAW CONSULTING Engineers
NC LICENSE #C-1164 www.crenshawconsulting.com 3918 Bush Street, Suite 200 Raleigh, North Carolina 27609 919-871-9370 Fax 871-5620

A/E INFO

APPROVED Within Jr. Division, P.E.s
FOR COMMANDER NAVFAC 5/13/2026
ACTIVITY
SATISFACTORY TO
DES MPM DRW MAS CHK LWM
PM/DM SLG/MDM
BRANCH MANAGER WRB
CHIEF ENG/ARCH JWJ
FIRE PROTECTION HPN

DEPARTMENT OF THE NAVY
NAVAL FACILITIES ENGINEERING SYSTEMS COMMAND
MIDLANT DC CORE
NAVAL FACILITIES ENGINEERING SYSTEMS COMMAND ~ MIDATLANTIC
NAVAL STATION - NORFOLK, VA.
MARINE CORPS BASE
CAMP LEJEUNE, NC
P-1550 SOF MARINE RAIDER BATTALION / COMPANY / TEAM FACILITIES
MECHANICAL SCHEDULES

SCALE: AS INDICATED
EPROJECT NO.: 1701820
CONSTR. CONTR. NO.
NAVFAC DRAWING NO. 12903831
SHEET 89 OF 122
A3
CO STG
M-602
FINAL SUBMITTAL
DRAWFORM REVISION: 25 AUGUST 2020

File Path: M:\Camp Lejeune\MARSOC SOF Marine Bn HQ_Team (P-1550)\A3 STORAGE
Print Date: 5/8/2026 10:48:09 AM

CHEMICAL SHOT FEEDER SCHEDULE

MARK	TANK VOLUME (GAL)	SERVICE	WEIGHT (LB)		REMARKS
			EMPTY	FULL	
CF-1	2	HOT WATER	25	45	1
CF-2	2	CHILLED WATER	25	45	1

REMARKS:
1. PROVIDE 200 PSIG PRESSURE RATED POT FEEDER.

CONTROL VALVE SCHEDULE

EQUIPMENT	SERVICE	FLOW RATE	NOMINAL SIZE	MIN. CV	MAX. PD (psi)	CONFIGURATION	ACTION
AHU-1 - PREHEAT	HW	4.8	1"	2.0	3.0	3-WAY	MOD
AHU-1 - REHEAT	HW	30.9	2"	2.0	3.0	3-WAY	MOD
AHU-1 - COOLING	CHW	83.4	3"	2.0	3.0	3-WAY	MOD
UH-1	HW	1.2	3/4"	2.0	3.0	3-WAY	MOD
UH-2	HW	1.2	3/4"	2.0	3.0	3-WAY	MOD
UH-3	HW	1.2	3/4"	2.0	3.0	3-WAY	MOD

DEHUMIDIFIER SCHEDULE

MARK	SERVICE	CONDENSATE REMOVAL (PTS/DAY)	BUCKET CAPACITY (PTS)	REFRIGERANT	WATTS	MCA	MOCP	VOLT/ø	WEIGHT (LBS)	REMARKS
DH-1	MECH ROOM 109	70	17.5	R-410A	745	7.2	15	120/1	55	1,2,3

REMARKS:
1. PROVIDE WITH REMOVABLE (CLEANABLE) FILTER.
2. PROVIDE WITH HARD-WIRE ELECTRICAL CONNECTION (NO PIGTAIL WITH PLUG). PROVIDE WITH EXTERNAL DRAIN CONNECTION, HARD PIPED TO HUB DRAIN.
3. PROVIDE WITH ANGLE IRON WALL MOUNTING BRACKET. WHEELS MUST BE REMOVED FROM HUMDIFIER PRIOR TO INSTALLATION ON WALL BRACKET. SECURE UNIT TO BRACKET.

HOT WATER UNIT HEATER SCHEDULE

MARK	LOCATION	TYPE	AIRFLOW (CFM)	MBH	EWT °F	LWT °F	GPM	PD (FT)	FAN (HP)	VOLT/PH	VIBRATION ISOLATION TYPE	NOTE
UH-1,2,3	MECH. 109, SPRINKLER 112, HOT MECH 110	HORIZONTAL	435	13.3	140	110	1.2	0.4	1/12	115/1	E	1,2,3

NOTES:
1. PROVIDE WITH WALL/CEILING MOUNTING BRACKET.
2. PROVIDE WITH WALL MOUNTED, LINE VOLTAGE THERMOSTAT. E.C. TO INSTALL AND WIRE.

BUFFER TANK SCHEDULE

MARK	SOLUTION VOLUME (GAL)	SERVICE	WEIGHT (lbs)		REMARKS
			EMPTY	FULL	
BT-1	240	CHILLED WATER	610	2000	1,2

REMARKS:
1. TOTAL CHILLED WATER SYSTEM VOLUME INCLUDES PIPES, COILS, FITTINGS, AND BUFFER TANK EQUALS A MINIMUM OF 5 MINUTE LOOP RUN TIME.
2. ASME RATED AT 125 PSI.

AIR COOLED PACKAGE CHILLER

MARK	NOMINAL CAPACITY	REFRIGERATION CAPACITY	E.W.T. (ºF)	L.WT. (ºF)	Δ P (FT)	GPM	FOULING FACTOR ºF FT2 H/BTU	FULL LOAD EER	IPLV EER	VOLT/PH	MCA	MOCP	REFRIGERANT TYPE	WEIGHT (LBS)	VIBRATION ISOLATION TYPE	REMARKS
CH-1	40	39.1	54	44	16	102	0.0001	11.2	16.17	208/3	198	250	R-454B	4000	D	1,2,3,4,5,6,7

REMARKS:
1. PROVIDE MINIMUM 4 SCROLL COMPRESSORS TO ALLOW CHILLER LOADING DOWN TO 20% DURING LOW LOAD CONDITIONS, LOW AMBIENT OPERATION DOWN TO 0ºF, HAIL GUARDS ON COIL AND COMPRESSOR SECTIONS, VIBRATION ISOLATION, FLOW SWITCH, BACNET COMMUNICATIONS CARD FOR FULL INTERGRATION OF ALL POINTS INTO BAS AND SINGLE POINT POWER CONNECTION.
2. SELECT UNIT AT 95ºAMBIENT WITH R-454B OR R-32. CHILLER MUST HAVE TWO INDEPENDENT REFRIGERATION CIRCUITS.
3. PROVIDE FACTORY START-UP, 10 YEAR PARTS, LABOR AND REFRIGERANT WARRANTY.
4. ENTIRE CHILLER MUST HAVE 6000 HR SALTSPRAY PROTECTION PER ASTM B117. COATINGS MUST NOT REDUCE COIL CAPACITIES BELOW SCHEDULED VALUES.
5. SOUND TO STAY WITHIN RECOMMENDED TYPICAL AHRI STANDARD 370 LEVELS FOR OUTDOOR CHILLERS ACROSS THE OCTAVE BAND.
6. PROVIDE CHILLER EVAPORATOR WITH FACTORY PROVIDED HEAT TRACE AND INSULATION. PROVIDE SEPARATE 120V, 20A POWER CONNECTION FOR FACTORY FREEZE PROTECTION.
7. EQUIPMENT SUPPORTS TO HAVE VIBRATION ISOLATION. SEE VIBRATION ISOLATION DETAIL FOR MORE INFORMATION.

BOILER SCHEDULE

MARK	LOCATION	TYPE	GPM	INPUT (MBH)	OUTPUT (MBH)	TURNDOWN	AFUE MIN EFF %	FLUE SIZE (IN)	INTAKE SIZE (IN)	ELECTRICAL			VIBRATION ISOLATION...	WEIGHT (LBS)	REMARKS
										VOLT	PH	FLA/MCA			
B-1	HOT MECH 110	CONDENSING FLOOR MOUNTED	30	399	387	10:1	97.0	4.0	4.0	120	1	3.0/3.8	C	400	1,2,3,4,5,6,7
B-2	HOT MECH 110	CONDENSING FLOOR MOUNTED	30	399	387	10:1	97.0	4.0	4.0	120	1	3.0/3.8	C	400	1,2,3,4,5,6

REMARKS:
1. PROVIDE NATURAL GAS, LOW NOX BOILER, LOW CO MODULATING BOILER.
2. HOT WATER TEMPERATURES: 110ºF EWT/140ºF LWT.
3. PROVIDE NEUTRALIZATION TANK FOR BOILER CONDENSATE, PIPED TO FLOOR DRAIN.
4. PROVIDE BOILER MANAGEMENT PANEL, TO CONTROL ALL INTERNAL BOILER FUNCTIONS. PROVIDE EXTERNAL BACNET CONNECTION, ALARM, ENABLE/DISABLE AND PUMP CONTROL.
5. PROVIDE WITH POLYPROPYLENE (PP) 4" INTAKE AND 4" EXHAUST KITS PER MANUFACTUER'S RECOMMENDATIONS FOR ROOF INSTALLATION.
6. MAXIMUM ALLOWABLE DISCHARGE OR RADIATED NOISE CRITERIA (NC) = 30.
7. PROVIDE SPARE RECIRCULATION PUMP WITH BOILER PURCHASE.

PUMP SCHEDULE

MARK	SERVICE	TYPE	MIN FLOW (GPM)	MAX FLOW (GPM)	HEAD (FT)	HP	VOLT/ø	RPM	VIBRATION ISOLATION TYPE	REMARKS
CHWP-1,2	CHILLED WATER	INLINE	90	90	50	2.0	208/3	1800	D	1,3,4
PHWP-1	PRIMARY HOT WATER SYSTEM (B-1)	INLINE	30	30	20	0.5	120/1	1800	E	2,4
PHWP-2	PRIMARY HOT WATER SYSTEM (B-2)	INLINE	30	30	20	0.5	120/1	1800	E	2,4
SHWP-1,2	HOT WATER SYSTEM	INLINE	15	42	35	1.0	208/3	1800	D	1,3,4

REMARKS:
1. PROVIDE WITH VFD AND BACNET MS/TP COMMUNICATIONS CARD. CHWP-1,2 VFD PROVIDED FOR SOFT-START AND BALANCING PURPOSES ONLY.
2. PROVIDE WITH BACNET MS/TP CARD.
3. PROVIDE PUMPS EQUALLY SIZED FOR PRIMARY/STANDBY OPERATION FOR N+1 REDUNDANCY, WITH LEAD/LAG CONTROLS.
4. EQUIPMENT SUPPORTS TO HAVE VIBRATION ISOLATION. SEE VIBRATION ISOLATION DETAIL FOR MORE INFORMATION.

AIR SEPARATOR TANK SCHEDULE

MARK	SIZE	SERVICE	MAX PD (FT. WG)	REMARKS
AS-1	2"	HOT WATER	3	1,2
AS-2	3"	CHILLED WATER	3	1,2

REMARKS:
1. PROVIDE WITH REMOVABLE HEAD.
2. SEPARATOR MUST BE COALESCING AIR/DIRT TYPE.

EXPANSION TANK SCHEDULE

MARK	FLUID	PIPING MATERIAL	SYSTEM VOLUME (GAL)	MIN. OPERATING TEMP. (F)	MAX. DESIGN TEMP. (F)	MAX. SYSTEM HEIGHT (FT.)	PRECHARGE PRESS. (PSI)	ASME PRESSURE RATING (PSI)	TANK VOLUME (GAL)	ACCEPTANCE VOLUME (GAL)	SERVICE	WEIGHT (LB)		REMARKS
												EMPTY	FULL	
ET-1	WATER	COPPER	80	50	140	6.5	12	125	10	10	HOT WATER	40	124	1
ET-2	WATER	COPPER	600	44	90	6.5	12	150	10	10	CHILLED WATER	40	124	1

REMARKS:
1. PROVIDE PRE-CHARGED FULL ACCEPTANCE BLADDER TANK AS WELL AS SIGHT GLASS, ANCHOR CLIPS, AND STAINLESS STEEL CONNECTOR.

SYM	DESCRIPTION	DATE	APPR

NAVFAC

SEAL

CRENSHAW CONSULTING Engineers
NC LICENSE #C-1582 www.crenshawconsulting.com 3836 Bush Street, Suite 200 Raleigh, North Carolina 27609 919-871-9270 Fax 871-5620

A/E INFO

APPROVED
FOR COMMANDER NAVFAC 5/13/2026
ACTIVITY

SATISFACTORY TO
DES MPM DRW MAS CHK LWM
PM/DM SLG/MDM
BRANCH MANAGER WRB
CHIEF ENG/ARCH JWJ
FIRE PROTECTION HPN

DEPARTMENT OF THE NAVY
NAVAL FACILITIES ENGINEERING SYSTEMS COMMAND
MIDLANT DC CORE
MARINE CORPS BASE
NAVAL FACILITIES ENGINEERING SYSTEMS COMMAND ~ MIDATLANTIC
NAVAL STATION - NORFOLK, VA
CAMP LEJEUNE, NC
P-1550 SOF MARINE RAIDER BATTALION / COMPANY / TEAM FACILITIES
MECHANICAL SCHEDULES

SCALE: AS INDICATED
EPROJECT NO.: 1701820
CONSTR. CONTR. NO.
NAVFAC DRAWING NO. 12903832
SHEET 90 OF 122
A3
CO STG
M-603
FINAL SUBMITTAL
DRAWFORM REVISION: 25 AUGUST 2020

File Path: M:\Camp Lejeune\MARSOC SOF Marine Bn HQ_Team (P-1550)\A3 STORAGE
Print Date: 5/6/2026 5:16:04 PM

CONTROLS LEGEND

SYMBOL	DESCRIPTION	SYMBOL	DESCRIPTION
AI	DDC ANALOG INPUT POINT W/ ADJUSTABLE PID GAIN CONTROL	BAS	BUILDING AUTOMATION SYSTEM
		KW	KILOWATTS, ELECTRIC HEATER
AO	DDC ANALOG OUTPUT POINT W/ ADJUSTABLE PID GAIN CONTROL	DDC	DIRECT DIGITAL CONTROL
		ATFP	ANTI-TERRORISM / FORCE PROTECTION
BI	DDC BINARY DIGITAL INPUT POINT W/ INDICATING LIGHT ON DDC PANEL	DP	DIFFERENTIAL PRESSURE
BO	DDC BINARY DIGITAL OUTPUT POINT W/ MANUAL OVERRIDE AND INDICATING LIGHT ON DDC PANEL	SP	STATIC PRESSURE SENSOR
AV	DDC ANALOG VALUE	VFD	VARIABLE FREQUENCY DRIVE
BV	DDC BINARY DIGITAL VALUE	CFM	CUBIC FEET PER MINUTE, AIRFLOW MEASURING STATION
	CURRENT SENSOR	F	FREEZESTAT
M	MOTOR, PROPORTIONAL ELECTRIC	TS	THERMOSTAT / HUMIDISTAT
SD	DUCT SMOKE DETECTOR - COORDINATE WITH ELECTRICAL CONTRACTOR FOR POWER SUPPLY	T	TEMPERATURE SENSOR
	MOTORIZED DAMPER	RH	RELATIVE HUMIDITY SENSOR
	FLOW METER		

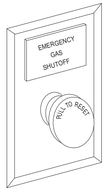

NOTES:

1. EMERGENCY NATURAL GAS SHUTOFF. LOCATE IN MECHANICAL BUILDING NEAR EXIT DOOR.
3. UPON ACTIVATION OF THE EMERGENCY PUSHBUTTON, A SIGNAL MUST BE SENT TO THE FACP. THE NATURAL GAS SOLENOID VALVE MUST HAVE A HARDWIRE INTERLOCK THAT DRIVES THE VALVE TO CLOSED POSITION UPON ALARM OR SHUTDOWN SIGNAL. THE SOLENOID VALVE MUST REMAIN CLOSED UNTIL A MANUAL RESET HAS OCCURRED.
4. SHUTOFF SWITCH SHALL BE MUSHROOM BUTTON, PULL TO RESET, LABELED "EMERGENCY GAS SHUTOFF".

B1 EMERGENCY GAS SHUTDOWN SWITCH
NTS

PROVIDE WITH CLEAR COVER

NOTES:

1. EMERGENCY AIR DISTRIBUTION SHUTDOWN, PROVIDE A MINIMUM OF ONE SHUTOFF SWITCH PER FLOOR. LOCATE THE SWITCH (OR SWITCHES) AS SHOWN ON PLANS.
2. UPON ACTIVATION OF EMERGENCY PUSHBUTTON(S), ALL AIR HANDLING UNITS AND EXHAUST FANS MUST BE DISABLED AND REMAIN OFF UNTIL MANUAL RESET HAS OCCURRED.
3. UPON ACTIVATION OF THE EMERGENCY PUSHBUTTON(S), ALL OUTSIDE AND EXHAUST AIR DAMPERS MUST FULLY CLOSE.
4. PROVIDE HARDWIRED INTERLOCK BETWEEN SWITCH (OR SWITCHES) AND HVAC EQUIPMENT TO SHUT DOWN ASSOCIATED SUPPLY AND EXHAUST FAN MOTORS AND DRIVE OUTSIDE AIR AND EXHAUST AIR DAMPERS TO THE CLOSED POSITION UPON ALARM OR SHUTDOWN SIGNAL. INTERLOCK MUST BE INDEPENDENT OF THE BAS AND FAIL SAFE.
5. MAINTAINED MUSHROOM BUTTON WITH CLEAR HINGED COVER, PULL TO RESET, LABELED "EMERGENCY HVAC SHUTDOWN".

A1 EMERGENCY HVAC SHUTDOWN SWITCH
NTS

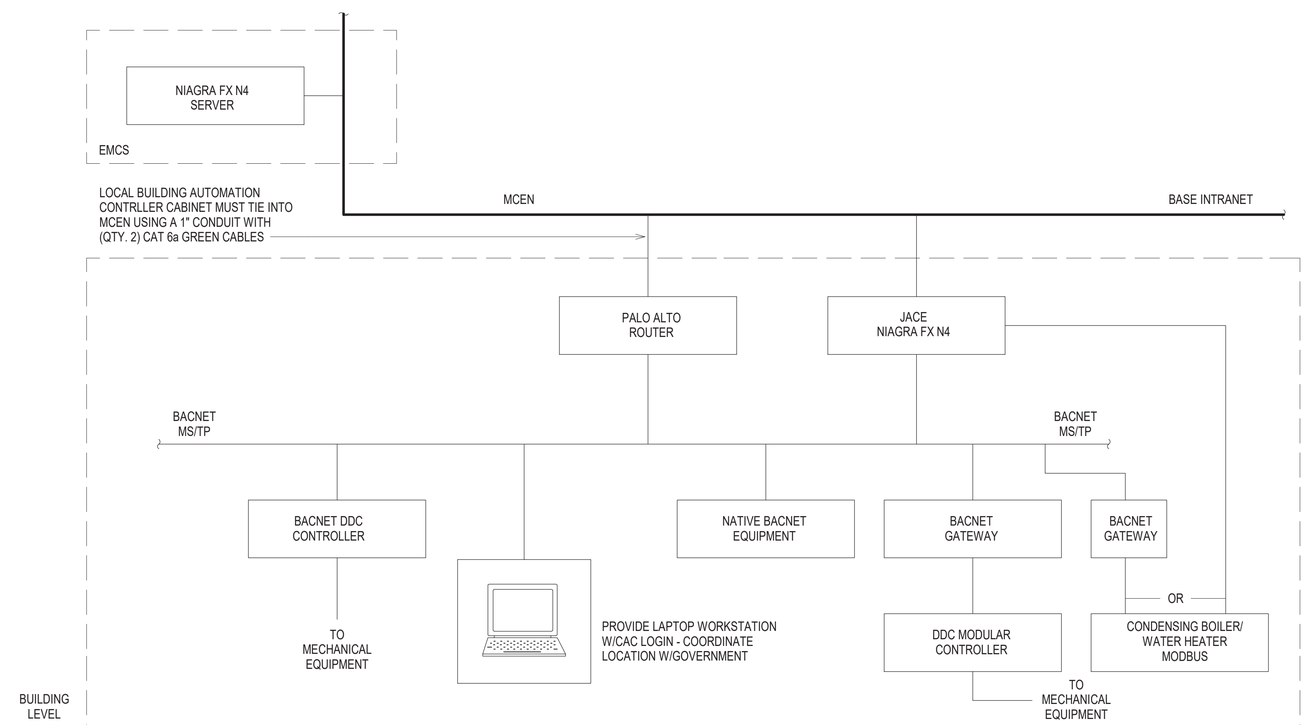

A2 DDC SYSTEM ARCHITECTURE
NTS

SYM	DESCRIPTION	DATE	APPR

NAVFAC

SEAL

CRENSHAW CONSULTING Engineers
NC LICENSE #C-1162 www.crenshawcc.com
3836 Bush Street, Suite 200
Raleigh, North Carolina 27609
919-871-9270 Fax 871-5620

A/E INFO

APPROVED
James E. Donahue, R.A.
FOR COMMANDER NAVFAC 5/13/2026
ACTIVITY

SATISFACTORY TO

DES	MPM	DRW	MAS	CHK	LWM

PM/DM SLG/MDM
BRANCH MANAGER WRB
CHIEF ENG/ARCH JWJ
FIRE PROTECTION HPN

DEPARTMENT OF THE NAVY
NAVAL FACILITIES ENGINEERING SYSTEMS COMMAND
NAVAL FACILITIES ENGINEERING SYSTEMS COMMAND - MIDATLANTIC
NAVAL STATION - NORFOLK, VA.
MIDLANT DC CORE
MARINE CORPS BASE
CAMP LEJEUNE, NC
P-1550 SOF MARINE RAIDER
BATTALION / COMPANY / TEAM FACILITIES
MECHANICAL CONTROLS

SCALE: AS INDICATED
EPROJECT NO.: 1701820
CONSTR. CONTR. NO.

A3
CO STG
NAVFAC DRAWING NO.
12903833
SHEET 91 OF 122
M-701

FINAL SUBMITTAL
DRAWFORM REVISION: 25 AUGUST 2020

File Path: M:\Camp Lejeune\MARSOC SOF Marine Bn HQ_Team (P-1550)\A3 STORAGE
Print Date: 5/6/2026 5:16:08 PM

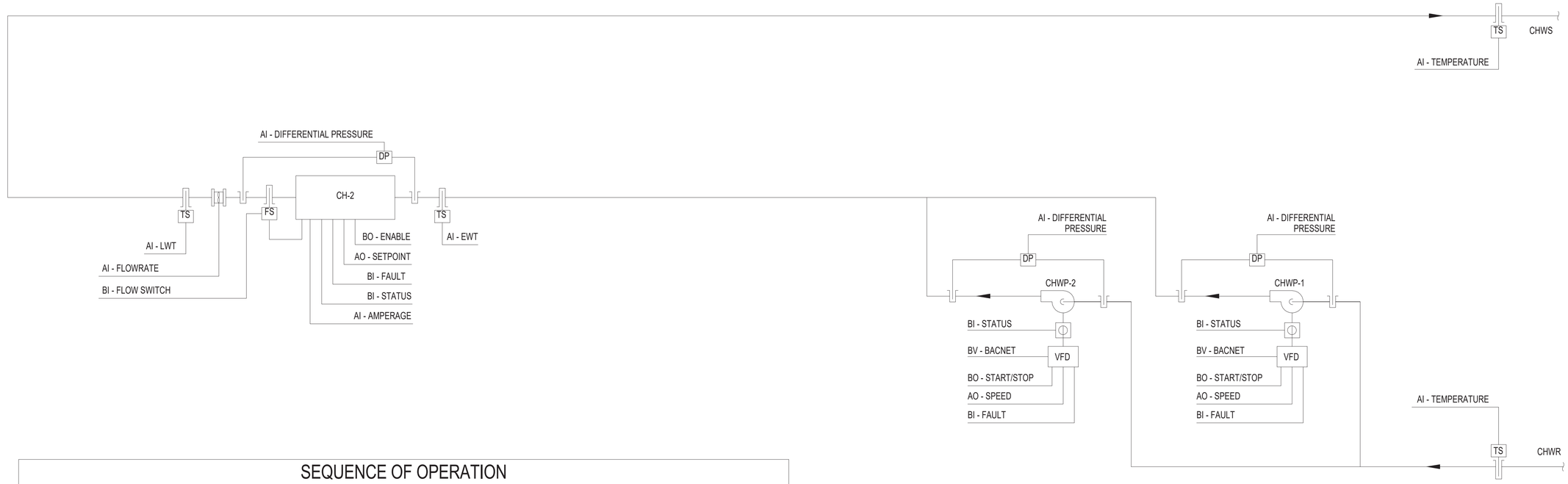

SEQUENCE OF OPERATION

CHILLED WATER SYSTEM (CHWS) (CH-1, CHWP-1,2) (SEE CHILLED WATER SYSTEM DIAGRAM):

GENERAL: THE CHILLED WATER SYSTEM CONSISTS OF ONE (1) AIR-COOLED CHILLER AND TWO (2) CHILLED WATER PUMPS (INLINE), EACH CAPABLE OF HANDLING FULL LOAD OF CHILLER. THE CHILLED WATER SYSTEM MUST BE ENABLED TO OPERATE WHEN ANY AIR HANDLING UNIT CHILLED WATER CONTROL VALVES OPEN IN RESPONSE TO COOLING DEMAND. ALL CHILLED WATER VALVES MUST BE NORMALLY CLOSED. TO PREVENT SHORT CYCLING, THE CHILLER MUST BE RUN FOR AND BE OFF FOR MINIMUM ADJUSTABLE TIMES (USER DEFINABLE), UNLESS SHUTDOWN DUE TO SAFETIES OR OUTSIDE AIR CONDITIONS.

CHILLED WATER PUMPS: THE CHILLED WATER PUMPS ARE ARRANGED FOR FOR CONSTANT FLOW, PRIMARY/STANDBY OPERATION. EACH PUMP WILL BE CAPABLE OF HANDLING 100% OF THE CHILLER LOAD CAPACITY. THE DDC CONTROL PANEL MUST START THE PRIMARY CHILLED WATER PUMP AND ALTERNATE WHICH PUMP IS PRIMARY ON A WEEKLY BASIS (ADJ), TO EQUALIZE PUMP RUNTIME. ON FAILURE OF THE PRIMARY PUMP, THE STANDBY PUMP MUST RUN AND THE PRIMARY PUMP MUST TURN OFF. THE LEAD CHILLER PUMP MUST RUN ANYTIME THE ASSOCIATED CHILLER OPERATION IS CALLED FOR. THE LEAD CHILLER PUMP WILL ALSO RUN FOR FREEZE PROTECTION ANYTIME THE OUTSIDE AIR TEMPERATURE IS BELOW 38°F (ADJ). THE LEAD PUMP MUST START AFTER CHILLER ISOLATION VALVES ARE OPENED AND PRIOR TO CHILLER BEING ENABLED AND STOP AFTER CHILLER HAS BEEN PROVEN OFF FOR 10 MINUTES (ADJ). THE CHILLED WATER PUMPS MUST HAVE A USER ADJUSTABLE DELAY START AND STOP TO ACCOMPLISH THIS SEQUENCE.

PUMP CAPACITY CONTROL:
1. GENERAL: PROVIDE VFD FOR EACH PUMP FOR SOFT START/STOP AND BALANCING PURPOSES ONLY. THE PUMP SPEED MUST BE FIXED DURING NORMAL OPERATION TO MAINTAIN CONSTANT FLOW THROUGH CHILLER.
2. SOFT START/STOP: UPON PUMP START COMMAND, THE ASSOCATED PUMP VFD MUST RAMP MOTOR SPEED FROM 0% TO OPERATING SPEED SETPOINT (ADJ). RAMP TIME TO BE 30 SECONDS (ADJ). SOFT STOP FOLLOWS THE SAME LOGIC, IN REVERSE ORDER.

CHILLERS: THE CHILLER PLANT IS ARRANGED FOR CONSTANT PRIMARY ONLY OPERATION. WHEN THE CHILLER PLANT IS ENABLED, THE LEAD CHILLER MUST BE ENABLED BY A USER ADJUSTABLE DELAY START TIME AFTER ISOLATION VALVES ARE OPENED AND ASSOCIATED PUMP STATUS IS PROVEN ON. THE DELAY TIME MUST ALLOW FOR PROPER CHILLED WATER SYSTEM START-UP, SHUTDOWN AND SEQUENCING. THE CHILLER MUST BE ALLOWED TO RUN ACCORDING TO INTERNAL SAFETIES AND CONTROLS TO ENSURE PROPER CHILLER FUNCTION. THE CHILLER MUST MAINTAIN A CHILLED WATER SUPPLY TEMPERATURE SETPOINT AS DETERMINED BY ITS OWN INTERNAL CONTROLLERS (PROVIDED BY OTHERS). THE BAS MUST SEND A CHILLED WATER SUPPLY TEMPERATURE SETPOINT COMMAND TO THE CHILLER CONTROL PANEL. TEMPERATURE SETPOINT MUST BE 44°F (ADJ) OR SET BY BUILDING COOLING DEMANDS.

SAFETY SHUTDOWN AND ALARMS: ALL ALARMS MUST BE DISPLAYED AND REQUIRE MANUAL RESET AT THE LOCAL DDC PANEL.

1. HIGH/LOW CHILLED WATER SUPPLY TEMPERATURE ALARM: CHW SUPPLY TEMPERATURE SENSOR MUST BE INSTALLED IN A LOCATION TO PROVIDE AN ACCURATE SUPPLY WATER TEMPERATURE. IF THE CHW SUPPLY TEMPERATURE IS GREATER THAN 48°F (ADJ), AN ALARM MUST BE SENT TO THE DDC SYSTEM. IF THE CHW SUPPLY TEMPERATURE IS LESS THAN 38°F (ADJ), AN ALARM MUST BE SENT TO THE DDC SYSTEM.

2. CHILLED WATER PUMPS (CHWP-1,2): IF ANY OF THE FOLLOWING OCCUR, AN ALARM MUST BE SENT TO THE DDC SYSTEM.
   A. CHW PUMP FAILURE: COMMANDED ON, BUT THE STATUS IS OFF.
   B. CHW PUMP RUNNING IN HAND: COMMANDED OFF, BUT THE STATUS IS ON.
   C. CHW PUMP RUNTIME EXCEEDED: STATUS RUNTIME EXCEEDS A USER-DEFINED (ADJ) LIMIT.

3. CHILLER (CH-1): IF ANY OF THE FOLLOWING OCCUR, AN ALARM MUST BE SENT TO THE DDC SYSTEM.
   A. CHILLER FAILURE: COMMANDED ON, BUT THE STATUS IS OFF.
   B. CHILLER RUNNING IN HAND: COMMANDED OFF, BUT THE STATUS IS ON.
   C. CHILLER RUNTIME EXCEEDED: STATUS RUNTIME EXCEEDS A USER-DEFINED (ADJ) LIMIT.

CHILLED WATER SYSTEM POINTS LIST

POINT NAME	HARDWARE				SOFTWARE				FAILURE MODE / ALARM SETPOINT	SHOW ON GRAPHICS
	AI	AO	BI	BO	AV	BV	TREND	ALARM		
CH-1: ENABLE				●			●			●
CH-1: STATUS			●				●			●
CH-1: FAULT			●				●	●		●
CH-1: SETPOINT					●		●			●
CH-1: AMPERAGE	●						●			●
CH-1: FLOW SWITCH			●				●			●
CH-1: PRESSURE DIFFERENTIAL	●						●			●
CH-1: ENTERING WATER TEMPERATURE (EWT)	●						●			●
CH-1: LEAVING WATER TEMPERATURE (LWT)	●						●			●
CHWP-1: START/STOP				●			●			●
CHWP-1: STATUS			●				●	●	PUMP OFF	●
CHWP-1: VFD FAULTS			●				●	●		●
CHWP-1: SPEED SETPOINT					●		●			●
CHWP-1: BACNET						●	●			●
CHWP-1: DIFFERENTIAL PRESSURE	●						●			●
CHWP-2: START/STOP				●			●			●
CHWP-2: STATUS			●				●	●	PUMP OFF	●
CHWP-2: VFD FAULTS			●				●	●		●
CHWP-2: SPEED SETPOINT					●		●			●
CHWP-2: BACNET						●	●			●
CHWP-2: DIFFERENTIAL PRESSURE	●						●			●
CHW SYSTEM FLOWRATE	●						●			●
CHW SYSTEM SUPPLY TEMPERATURE	●						●			●
CHW SYSTEM RETURN TEMPERATURE	●						●			●

A1 CHILLED WATER SYSTEM CONTROLS
NTS

SYM	DESCRIPTION	DATE	APPR

NAVFAC

SEAL
05-08-26

CRENSHAW CONSULTING Engineers
NC LICENSE #C-1582 www.crenshawcc.com 3836 Bush Street, Suite 200 Raleigh, North Carolina 27609 919-871-9270 Fax 871-5620

A/E INFO

APPROVED
FOR COMMANDER NAVFAC 5/15/2026
ACTIVITY

SATISFACTORY TO
DES MPM DRW MAS CHK LWM
PM/DM SLG/MDM
BRANCH MANAGER WRB
CHIEF ENG/ARCH JWJ
FIRE PROTECTION HPN

DEPARTMENT OF THE NAVY
NAVAL FACILITIES ENGINEERING SYSTEMS COMMAND
MIDLANT DC CORE
MARINE CORPS BASE
NAVAL FACILITIES ENGINEERING SYSTEMS COMMAND ~ MIDATLANTIC
NAVAL STATION - NORFOLK, VA.
CAMP LEJEUNE, NC
P-1550 SOF MARINE RAIDER
BATTALION / COMPANY / TEAM FACILITIES
MECHANICAL CONTROLS

SCALE: AS INDICATED
EPROJECT NO.: 1701820
CONSTR. CONTR. NO.

NAVFAC DRAWING NO. 12903834
SHEET 92 OF 122
M-702

A3
CO STG
FINAL SUBMITTAL
DRAWFORM REVISION: 25 AUGUST 2020

File Path: M:\Camp Lejeune\MARSOC SOF Marine Bn HQ_Team (P-1550)\A3 STORAGE
Print Date: 5/6/2026 5:16:09 PM

SEQUENCE OF OPERATION

HEATING HOT WATER (HHW) SYSTEM (BOILERS B-1,2 AND PUMPS SHWP-1, SHWP-2, PHWP-1,2) SEQUENCE OF OPERATION (SEE HEATING HOT WATER SYSTEM DIAGRAM):
THE FOLLOWING CONTROL SEQUENCE IS PROVIDED FOR THE BUILDING VARIABLE PRIMARY-SECONDARY HOT WATER SYSTEM.

GENERAL: THE HHW SYSTEM CONSISTS OF TWO (2) NATURAL GAS, FIRE-TUBE, CONDENSING BOILERS WITH ASSOCIATED CONSTANT SPEED PRIMARY/STANDBY PUMPS, AND TWO (2) 100% REDUNDANT VARIABLE SPEED SECONDARY PUMPS. THE BOILER MASTER MUST CONTROL THE BOILERS AND PRIMARY HHW PUMPS. THE BOILER MASTER MUST INTERFACE WITH THE DDC SYSTEM FOR MONITORING HARDWARE INPUTS, SUPPORT FEATURES, AND STRATEGIES DESCRIBED BELOW. THE BOILER MASTER MUST BE ABLE TO RESET THE HOT WATER LEAVING TEMPERATURE AND IS TO MAINTAIN THE SECONDARY HOT WATER SUPPLY TEMPERATURE. BOILER MANUFACTURER SUPPLY WATER AND OUTDOOR TEMPERATURE SENSORS MUST BE HARDWIRED TO BOILER CONTROL PANEL. THE SECONDARY HHW PUMPS MUST BE CONTROLLED BY THE HHW SYSTEM CONTROLLER.

SCHEDULE: BOILER AND HOT WATER PUMPS MUST BE IN OPERATION YEAR-ROUND AS NEEDED.

THE FOLLOWING SEQUENCE OF OPERATION IS A GUIDELINE FOR SEQUENCING AND CONTROL POINTS REQUIRED FOR OVERALL DESIGN AND DEPENDING UPON BOILER MANUFACTURER, MAY OR MAY NOT BE ALL ENCOMPASSING.

BOILER STAGING: THE BOILER PLANT MUST BE CONFIGURED IN A CASCADE ARRANGEMENT. THE BOILER MASTER MUST PROVIDE INTERNALLY GENERATED STAGING COMMANDS COORDINATED TO MAINTAIN A SUPPLY HOT WATER TEMPERATURE PER THE BOILER TEMPERATURE RESET CURVE. BOILER(S) MUST NOT OPERATE UNTIL SYSTEM FLOW IS PROVEN VIA FLOW SWITCH COMMUNICATION. ALL BOILERS ARE TO BE PROVIDED WITH BACNET COMMUNICATION BOARD AND CONNECTED TO BAS FOR MONITORING PURPOSES ONLY DURING NORMAL OPERATION. IN THE EVENT OF LEAD BOILER FAILURE, THE NEXT BOILER IN CASCADE SEQUENCE MUST BE CONFIGURED TO LEAD BOILER AND CONTROL STAGING OF REMAINING BOILERS.

TEMPERATURE RESET CONTROL: THE PLANT HOT WATER SUPPLY TEMPERATURE SETPOINT MUST BE RESET USING TRIM AND RESPOND LOGIC, BASED ON OUTSIDE AIR TEMPERATURE. AS OUTSIDE AIR TEMPERATURE RISES FROM 30°F (ADJ.) TO 60°F (ADJ.), THE HOT WATER SUPPLY TEMPERATURE SETPOINT SHALL BE RESET LINEARLY FROM 140°F (ADJ.) TO 120°F (ADJ.) . PROVIDE ADDITIONAL RESET OPTIONS BASED ON BUILDING ZONE DEMANDS OR FIXED USER DEFINED SETPOINT.

PRIMARY PUMPS: PROVIDE HOT WATER PUMPS WITH CONSTANT SPEED CONTROLLERS. EACH BOILER MUST BE PROVIDED WITH A PRIMARY PUMP CONTROLLED BY THE BOILERS STAND-ALONE CONTROLLER. BOILER PUMPS MUST BE CONTROLLED TO MAINTAIN A CONSTANT WATER FLOW OF 30 GPM (ADJ.) THROUGH BOILERS.

SECONDARY PUMPS: PROVIDE HOT WATER PUMPS WITH VARIABLE FREQUENCY DRIVE (VFD) CONTROLLERS. VFD CONTROLLERS MUST PROVIDE PUMPS WITH SOFT-START AND VARIABLE SPEED OPERATION. REDUNDANT PUMPS SHWP-1/SHWP-2 MUST OPERATE ON A LEAD/STANDBY SEQUENCE BASED ON A TWO WEEK ROTATION (PUMPS MUST BE SCHEDULED TO ROTATE ON THE 1ST AND 15TH OF EACH MONTH TO PROMOTE EVEN WEAR/USAGE). IN THE "REMOTE" SETTING, THE PUMPS MUST BE CONTROLLED BY THE DDC CONTROLLER. IN THE "KEYPAD" POSITION, THE PUMPS MUST RUN AND PUMP SPEED WILL BE CONTROLLED THROUGH A MANUAL SPEED ADJUSTMENT INTEGRAL TO THE VFD. EACH PUMP MOTOR MUST BE INDIVIDUALLY WIRED TO ITS PRIMARY VFD. THE FOLLOWING VARIABLE SPEED LIMIT MUST BE INCORPORATED: (A) PUMP FLOW CONTROL MUST BE LIMITED TO THE VFD MANUFACTURERS RECOMMENDED OPERATING RANGE. IF THE LEAD PUMP FAILS TO START, THE STANDBY PUMP MUST BECOME THE LEAD PUMP.

SECONDARY PUMP CAPACITY CONTROL:
1. GENERAL: THE PUMP SPEED MUST BE MODULATED TO MAINTAIN THE DIFFERENTIAL PRESSURE SETPOINT.
2. PUMP SPEED CONTROL VIA DIFFERENTIAL PRESSURE CONTROL: THE CONTROLLER MUST MEASURE REMOTE CIRCUIT DIFFERENTIAL PRESSURE AND CALCULATE THE CIRCUIT ROLLING AVERAGE DIFFERENTIAL PRESSURE AND MODULATE THE PUMP VFD SPEED TO MAINTAIN AN OPTIMIZED DIFFERENTIAL PRESSURE SETPOINT.
   A. THE INITIAL DIFFERENTIAL PRESSURE SETPOINT MUST BE 10 PSIG (ADJ. AS FIELD CONDITIONS PERMIT.)
   B. VFD SPEED OUTPUT MUST BE MAPPED FROM MINIMUM SPEED AT 0% TO MAXIMUM PUMP SPEED AT 100%

HHW START-UP: SYSTEM START-UP MUST BE INITIATED BY THE DDC SYSTEM. THE LEAD PUMP MUST SOFT-START AND THE ASSOCIATED VFD CONTROLLER MUST VARY THE PUMP SPEED AS SET BY THE DDC SYSTEM. THE BOILER MASTER MUST START THE BOILERS AS DESCRIBED IN THE BOILER STAGING SECTION.

HHW SHUTDOWN: SYSTEM SHUTDOWN MUST BE INITIATED BY THE DDC SYSTEM OR EMERGENCY GAS SHUTOFF SWITCH. THE BOILERS MUST SHUTDOWN FIRST AND THEN THE LEAD PUMP MUST BE SET TO MINIMUM FLOW AND THEN DE-ENERGIZED.

FREEZE PROTECTION: THE BOILER HHW SYSTEM MUST ALSO RUN WHENEVER THE OUTSIDE AIR TEMPERATURE IS LESS THAN 38°F (ADJ).

SENSORS: SENSORS MUST BE PROVIDED AS REQUIRED BY THIS SEQUENCE OF OPERATION, THE CONTROL DIAGRAM, AND THE ASSOCIATED POINTS LIST.

SAFETY SHUTDOWN AND ALARMS: ALL ALARMS MUST BE DISPLAYED AND REQUIRE MANUAL RESET AT THE LOCAL DDC PANEL.

1. EMERGENCY SHUTDOWN: IF THE EMERGENCY GAS SHUTOFF SIGNAL IS RECEIVED, THE HHW SYSTEM MUST SHUTDOWN USING A SOFTWARE COMMAND AND AN ALARM MUST BE SENT TO THE DDC SYSTEM.
2. HIGH/LOW HHW SUPPLY TEMPERATURE ALARM: HWS TEMPERATURE SENSOR MUST BE INSTALLED AFTER THE BOILERS AND IN A LOCATION TO PROVIDE AN ACCURATE SUPPLY WATER TEMPERATURE. IF THE HWS TEMPERATURE IS NOT WITHIN +/- 10°F OF SETPOINT FOR 5 MINUTES (ADJ.) OR LONGER, AN ALARM MUST BE SENT TO THE DDC SYSTEM. IF THE HWS TEMPERATURE IS GREATER THAN 150°F (ADJ.) FOR 5 MINUTES (ADJ.) OR LONGER, THE BOILERS MUST BE DE-ENERGIZED AND REQUIRE MANUAL RESET.
3. BOILER CIRCULATION PUMPS (PHWP-1,2): IF ANY OF THE FOLLOWING OCCUR, AN ALARM MUST BE SENT TO THE DDC SYSTEM.
   A. CIRCULATION PUMP FAILURE: COMMANDED ON, BUT THE STATUS IS OFF.
   B. CIRCULATION PUMP RUNNING IN HAND: COMMANDED OFF, BUT THE STATUS IS ON.
   C. CIRCULATION PUMP RUNTIME EXCEEDED: STATUS RUNTIME EXCEEDS A USER-DEFINED (ADJ) LIMIT.
5. HOT WATER DISTRIBUTION PUMPS (SHWP-1,2): IF ANY OF THE FOLLOWING OCCUR, AN ALARM MUST BE SENT TO THE DDC SYSTEM.
   A. SECONDARY PUMP FAILURE: COMMANDED ON, BUT THE STATUS IS OFF.
   B. SECONDARY PUMP RUNNING IN HAND: COMMANDED OFF, BUT THE STATUS IS ON.
   C. SECONDARY PUMP RUNTIME EXCEEDED: STATUS RUNTIME EXCEEDS A USER-DEFINED (ADJ) LIMIT.
6. BOILERS (B-1,2): IF ANY OF THE FOLLOWING OCCUR, AN ALARM MUST BE SENT TO THE DDC SYSTEM.
   A. BOILER FAILURE: COMMANDED ON, BUT THE STATUS IS OFF.
   B. BOILER RUNNING IN HAND: COMMANDED OFF, BUT THE STATUS IS ON.
   C. BOILER RUNTIME EXCEEDED: STATUS RUNTIME EXCEEDS A USER-DEFINED (ADJ) LIMIT.
   D. LEAD BOILER FAILURE: THE LEAD BOILER IS IN FAILURE AND FIRST LAG BOILER HAS BEEN DESIGNATED LEAD.

HOT WATER SYSTEM POINTS LIST

POINT NAME	HARDWARE				SOFTWARE				ALARM SETPOINT	SHOW ON GRAPHICS
	AI	AO	BI	BO	AV	BV	TREND	ALARM		
B-1: ENABLE				●			●			●
B-1: STATUS			●				●	●	PUMP OFF	●
B-1: ALARM			●				●	●		●
B-1: HW TEMP RESET	●						●			●
B-1: BOILER SUPPLY TEMP	●						●			●
B-1: FLOW SWITCH			●				●			●
B-2: ENABLE				●			●			●
B-2: STATUS			●				●	●	PUMP OFF	●
B-2: ALARM			●				●	●		●
B-2: HW TEMP RESET	●						●			●
B-2: BOILER SUPPLY TEMP	●						●			●
B-2: FLOW SWITCH			●				●			●
B-1,2 BOILER SUPPLY TEMP SETPOINT					●		●			●
PHWP-1: BOILER PUMP STATUS			●				●	●	PUMP OFF	●
PHWP-2: BOILER PUMP STATUS			●				●	●	PUMP OFF	●
SHWP-1: START/STOP				●			●			●
SHWP-1: STATUS			●				●	●	PUMP OFF	●
SHWP-1: VFD FAULTS			●				●	●		●
SHWP-1: SPEED SETPOINT					●		●			●
SHWP-1: PRESSURE DIFFERENTIAL	●						●			●
SHWP-2: START/STOP				●			●			●
SHWP-2: STATUS			●				●	●	PUMP OFF	●
SHWP-2: VFD FAULTS			●				●	●		●
SHWP-2: SPEED SETPOINT					●		●			●
SHWP-2: PRESSURE DIFFERENTIAL	●						●			●
SECONDARY CIRCUIT FLOWRATE	●						●			●
SECONDARY CIRCUIT FLOWRATE AVG.					●		●			●
SECONDARY CIRCUIT SUPPLY TEMP.	●						●			●
SECONDARY CIRCUIT RETURN TEMP.	●						●			●
PRIMARY COMMON SUPPLY TEMP.	●						●			●
PRIMARY COMMON RETURN TEMP.	●						●			●
SECONDARY CIRCUIT DP	●						●			●
SECONDARY CIRCUIT DP SETPOINT					●		●			●
SECONDARY CIRCUIT DP AVG.					●		●			●
OUTSIDE AIR TEMPERATURE	●						●			●
EMERGENCY GAS SHUTOFF				●			●	●		●

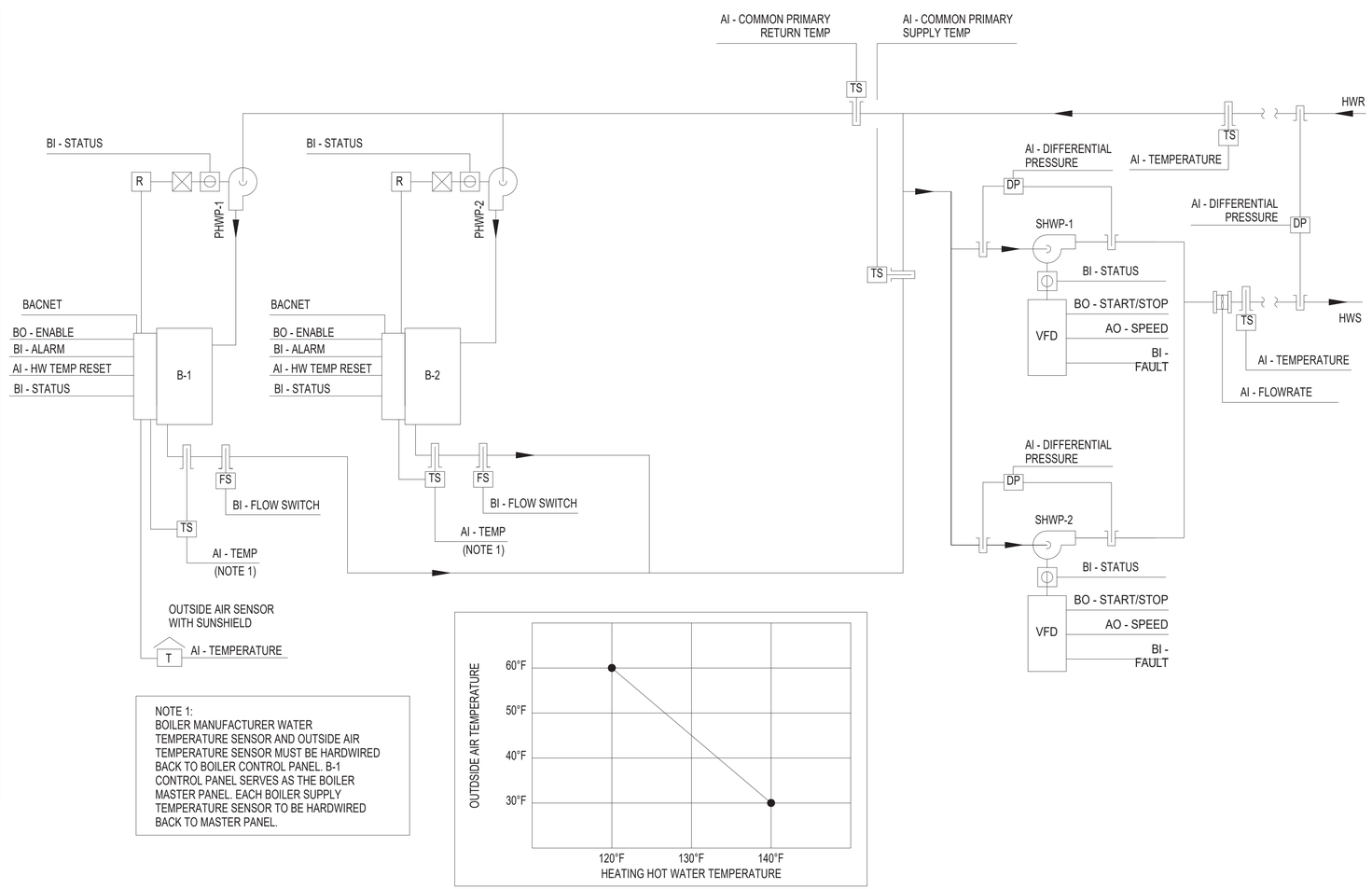

NOTE 1:
BOILER MANUFACTURER WATER TEMPERATURE SENSOR AND OUTSIDE AIR TEMPERATURE SENSOR MUST BE HARDWIRED BACK TO BOILER CONTROL PANEL. B-1 CONTROL PANEL SERVES AS THE BOILER MASTER PANEL. EACH BOILER SUPPLY TEMPERATURE SENSOR TO BE HARDWIRED BACK TO MASTER PANEL.

A2 HOT WATER SYSTEM CONTROLS
NTS

SYM	DESCRIPTION	DATE	APPR

NAVFAC

NORTH CAROLINA PROFESSIONAL SEAL 056500 ENGINEER
05-08-26
SEAL

CRENSHAW CONSULTING Engineers
NC LICENSE #C-1558
3836 Bush Street, Suite 200
Raleigh, North Carolina 27609
919-871-9270 Fax 871-5620

A/E INFO

APPROVED
FOR COMMANDER NAVFAC 5/13/2026
ACTIVITY

SATISFACTORY TO
DES MPM DRW MAS CHK LWM
PM/DM SLG/MDM
BRANCH MANAGER WRB
CHIEF ENG/ARCH JWJ
FIRE PROTECTION HPN

DEPARTMENT OF THE NAVY
NAVAL FACILITIES ENGINEERING SYSTEMS COMMAND
MIDLANT DC CORE
MARINE CORPS BASE
NAVAL FACILITIES ENGINEERING SYSTEMS COMMAND - MIDATLANTIC
NAVAL STATION - NORFOLK, VA
CAMP LEJEUNE, NC
P-1550 SOF MARINE RAIDER BATTALION / COMPANY / TEAM FACILITIES
MECHANICAL CONTROLS

SCALE: AS INDICATED
EPROJECT NO.: 1701820
CONSTR. CONTR. NO.
NAVFAC DRAWING NO. 12903835
SHEET 93 OF 122
A3
CO STG
M-703
FINAL SUBMITTAL
DRAWFORM REVISION: 25 AUGUST 2020

File Path: M:\Camp Lejeune\MARSOC SOF Marine Bn HQ_Team (P-1550)\A3 STORAGE
Print Date: 5/6/2026 5:16:10 PM

NOTES:
1. REFER TO CV SCHEDULE FOR ALL 2-WAY AND 3-WAY CONTROL VALVE REQUIREMENTS.
2. HARDWIRE OUTDOOR AND EXHAUST AIR DAMPER STATUS WITH THE AHU SAFETY CIRCUIT TO PREVENT THE SUPPLY AND EXHAUST FANS FROM RUNNING WHILE THE DAMPERS ARE NOT PROVEN IN THE OPEN POSITION.

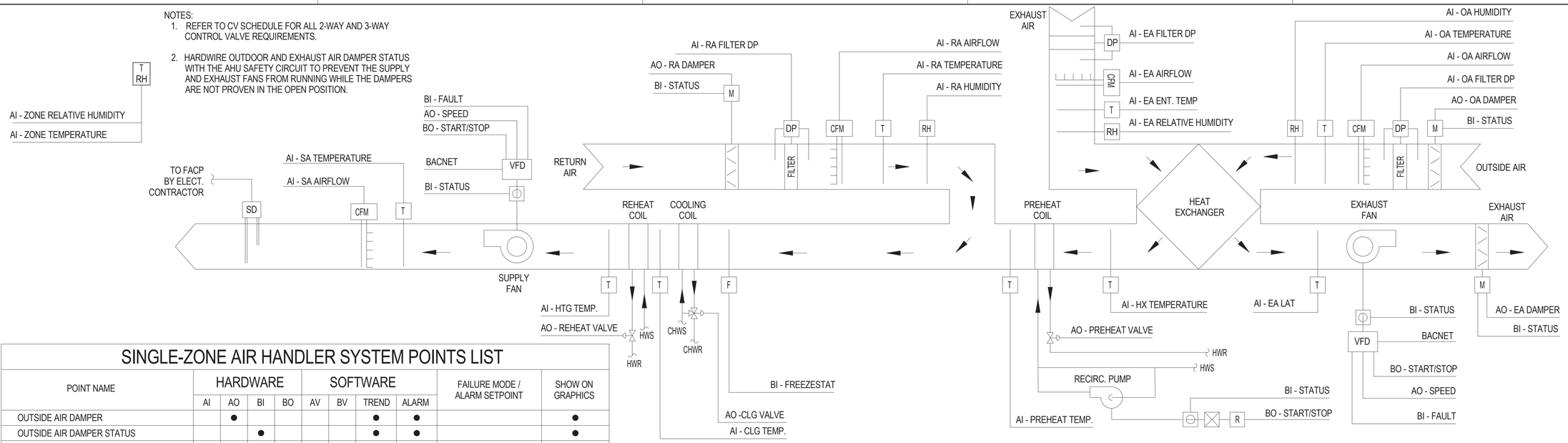

SINGLE-ZONE AIR HANDLER SYSTEM POINTS LIST

POINT NAME	HARDWARE				SOFTWARE				FAILURE MODE / ALARM SETPOINT	SHOW ON GRAPHICS
	AI	AO	BI	BO	AV	BV	TREND	ALARM		
OUTSIDE AIR DAMPER		●					●	●		●
OUTSIDE AIR DAMPER STATUS			●				●	●		●
OUTSIDE AIR AIRFLOW	●						●			●
OUTSIDE AIR TEMPERATURE	●						●			●
OUTSIDE AIR RELATIVE HUMIDITY	●						●			●
HEAT EXCHANGER LEAVING TEMPERATURE	●						●			●
PREHEAT COIL VALVE		●					●			●
PREHEAT COIL LAT	●						●			●
FREEZESTAT			●				●	●	OA DAMPER CLOSE	●
COOLING COIL VALVE		●					●			●
COOLING COIL LAT	●						●			●
REHEAT COIL VALVE		●					●			●
REHEAT COIL LAT	●						●			●
SUPPLY FAN START/STOP				●			●			●
SUPPLY FAN STATUS			●				●	●	FAN OFF	●
SUPPLY FAN VFD FAULTS			●				●	●	FAN OFF	●
SUPPLY FAN SPEED SETPOINT		●					●			●
SUPPLY FAN BACNET						●	●			●
SUPPLY AIR AIRFLOW	●						●			●
SUPPLY AIR TEMPERATURE	●						●			●
RETURN AIR AIRFLOW	●						●			●
RETURN AIR TEMPERATURE	●						●			●
RETURN AIR RELATIVE HUMIDITY	●						●			●
RETURN AIR DAMPER		●					●	●		●
RETURN AIR DAMPER STATUS			●				●	●		●
EXHAUST AIR AIRFLOW	●						●			●
EXHAUST AIR ENTERING TEMPERATURE	●						●			●
EXHAUST AIR RELATIVE HUMIDITY	●						●			●
EXHAUST AIR LEAVING TEMPERATURE	●						●			●
EXHAUST FAN START/STOP				●			●			●
EXHAUST FAN STATUS			●				●	●	FAN OFF	●
EXHAUST FAN VFD FAULTS			●				●	●	FAN OFF	●
EXHAUST FAN SPEED SETPOINT		●					●			●
EXHAUST FAN BACNET						●	●			●
EXHAUST AIR DAMPER		●					●	●		●
EXHAUST AIR DAMPER STATUS			●				●	●		●
DUCT SMOKE DETECTOR			●				●	●		●
ZONE AIR TEMPERATURE	●						●			●
ZONE RELATIVE HUMIDITY	●						●			●
OA FILTER DIFFERENTIAL PRESSURE	●						●	●		●
RA FILTER DIFFERENTIAL PRESSURE	●						●	●		●
EA FILTER DIFFERENTIAL PRESSURE	●						●	●		●
RECIRC PUMP START/STOP				●			●			●
RECIRC PUMP STATUS			●				●	●	PUMP OFF	●

SEQUENCE OF OPERATION

SINGLE-ZONE AIR HANDLER SYSTEM CONTROL (AHU-1)

GENERAL:
1. AHU IS SINGLE ZONE VARIABLE AIR VOLUME UNIT WITH MIXING BOX, CHILLED WATER COOLING COIL AND PREHEAT AND REHEAT HOT WATER HEATING COILS. THE AHU WILL HAVE CONSTANT-VOLUME EXHAUST AIR AND CONSTANT-VOLUME OUTSIDE AIR WHICH UTILIZE A FIXED PLATE & FRAME HEAT EXCHANGER. THE SUPPLY AND EXHAUST FANS WILL BE EQUIPPED WITH A DIRECT DRIVE FAN MOTOR WITH A VFD FOR BOTH FANS.
2. THE OCCUPANCY SCHEDULE AS INDICATED BY THE SEQUENCE OF OPERATIONS MUST BE DEFINED AS 0600 TO 1800 MONDAY THROUGH FRIDAY FOR OCCUPIED HOURS OR AS REQUESTED BY OWNER. UNOCCUPIED HOURS MUST BE 1800 TO 0600 MONDAY THROUGH FRIDAY AND 0000 TO 0000 SATURDAY AND SUNDAY. OCCUPANCY SCHEDULE MUST BE ADJUSTABLE THROUGH THE BAS.

OCCUPIED MODE:
1. THE AIR HANDLING UNIT MUST BE STARTED AND STOPPED BY THE BAS UNDER A TIME OF DAY SCHEDULE. THIS SCHEDULE IS TO BE MODIFIED BY A START STOP OPTIMIZATION PROGRAM DURING PULL DOWN / WARM UP OPERATION. THE FAN MUST START AT THIS OPTIMIZED TIME, OPEN THE APPROPRIATE AHU COIL TO 100% UNTIL ALL ZONES REPORT OCCUPIED SETPOINT HAS BEEN ACHIEVED.
2. UPON STARTUP, THE OUTSIDE AIR AND EXHAUST DAMPERS ARE COMMANDED OPENED AND UPON PROOF OF DAMPERS OPEN POSITION, THE SUPPLY AND EXHAUST FAN WILL BE COMMANDED TO RUN. DURING OPERATION, THE AHU DDC MUST CONTINUOUSLY MONITOR THE EXHAUST AND OUTSIDE AIR FLOW RATE (CFM) AND THE AHU DDC MUST SIGNAL THE OUTSIDE AND RETURN AIR DAMPERS TO MODULATE TO MAINTAIN CONSTANT OUTSIDE AIR FLOW RATES PER THE SCHEDULED RATES. THE AHU DDC MUST SIGNAL THE EXHAUST FAN TO ADJUST SPEED TO MAINTAIN A CONSTANT EXHAUST AIR FLOW. PROVIDE AFMS WITH ALL REQUIRED STRAIGHT DUCT LENGTHS PER INSTALLATION INSTRUCTIONS.
3. SUPPLY FAN CONTROL: THE SUPPLY FAN MUST RUN ANYTIME THE UNIT IS COMMANDED TO RUN. THE AHU DDC MUST SIGNAL THE SUPPLY FAN TO ADJUST SPEED TO MAINTAIN THE SPACE TEMPERATURE SETPOINT.
4. TEMPERATURE CONTROL: THE AHU DDC MUST MONITOR THE SPACE TEMPERATURE AND MODULATE THE PREHEAT, COOLING AND REHEAT COIL VALVE TO MAINTAIN REQUIRED SETPOINT.
   A. COOLING COIL MUST BE ENABLED TO MAINTAIN COOLING SETPOINT OF 55°F (ADJ) AS FOLLOWS:
      - OUTSIDE AIR TEMPERATURE IS GREATER THAN 60°F (ADJ) AND SUPPLY FAN STATUS IS ON.
      - THE COOLING COIL MUST ALSO OPEN TO 100% (ADJ) IF THE FREEZESTAT (38°F) IS ON.
   B. REHEAT COIL MUST BE ENABLED TO MAINTAIN HEATING SETPOINT OF 95°F (ADJ) AS FOLLOWS:
      - OUTSIDE AIR TEMPERATURE IS LESS THAN 60°F (ADJ) AND SUPPLY FAN STATUS IS ON.
   C. PREHEAT COIL MUST BE ENABLED TO MAINTAIN PREHEAT SETPOINT OF 55°F (ADJ) AS FOLLOWS:
      - SUPPLY FAN STATUS IS ON.
      - THE PREHEAT COIL MUST ALSO OPEN TO 100% (ADJ) IF THE HX LEAVING AIR TEMPERATURE IS BELOW 42°F (ADJ) AND PREHEAT PUMP MUST ENGAGE UNTIL TEMPERATURE RISES ABOVE 42°F (ADJ).

DEHUMIDIFICATION MODE:
1. WHEN THE SPACE RELATIVE HUMIDITY RISES ABOVE 55% RH (ADJ.), AS SENSED BY THE RETURN DUCT HUMIDITY SENSOR:
   - THE SUPPLY FAN MUST RAMP DOWN TO PROVIDE SCHEDULED MINIMUM AIRFLOW.
   - THE CHILLED WATER VALVE MUST MODULATE TO MAINTAIN 52°F (ADJ.) COOLING COIL TEMPERATURE SETPOINT.
   - WHEN THE SPACE RELATIVE HUMIDITY FALLS BELOW 45% RH (ADJ.), THE UNIT RETURNS TO NORMAL OPERATION

UNOCCUPIED MODE:
1. IF TEMPERATURE DROPS BELOW THE UNOCCUPIED LOW LIMIT SETPOINT OF 55°F (ADJ) OR RISES ABOVE THE UNOCCUPIED HIGH LIMIT OF 84°F (ADJ), THE UNIT MUST OPERATE.

SYSTEM SHUT-DOWN:
1. THE SHUT DOWN SEQUENCE WHEN THE SYSTEM IS SHUT DOWN BY A SAFETY ALARM OR STOP COMMAND MUST INCLUDE:
   - THE SUPPLY FAN MUST BE POWERED OFF.
   - THE OUTSIDE/EXHAUST AIR DAMPERS MUST CLOSE.
   - RETURN AIR DAMPERS MUST OPEN.
   - THE COOLING AND REHEAT COIL CONTROL VALVE MUST CLOSE.
   - THE PREHEAT COIL CONTROL VALVE MUST BE OPEN.

SAFETY SHUTDOWN AND ALARMS:
ALL ALARMS MUST BE DISPLAYED AND REQUIRE MANUAL RESET AT THE LOCAL DDC PANEL.
1. EMERGENCY / ATFP SHUTDOWN: IF THE HVAC EMERGENCY SHUTDOWN SIGNAL IS RECEIVED, THE HVAC SYSTEM MUST SHUTDOWN WITHIN 30 SECONDS USING A SOFTWARE COMMAND AND AN ALARM MUST BE SENT TO THE DDC SYSTEM. DAMPERS LEADING TO THE OUTSIDE MUST CLOSE WITHIN 30 SECONDS REGARDLESS OF HAND/OFF/AUTO (HOA) POSITION OF EQUIPMENT. THIS MUST BE ACCOMPLISHED BY BOTH A HARDWIRED SHUTDOWN WIRED IN SERIES WITH OTHER SAFETIES AND AN AHU DDC SHUTDOWN REQUIRING A MANUAL RESET.
2. FREEZE PROTECTION: THE UNIT MUST SHUT DOWN AND GENERATE AN ALARM UPON RECEIVING A FREEZESTAT (38°F) STATUS. SYSTEM MUST BE HARDWIRED TO SHUTDOWN UNIT. OUTSIDE DAMPERS MUST CLOSE. RETURN DAMPER AND CHILLED WATER COILS WILL OPEN TO 100%.THE HOT WATER PREHEAT COIL RECIRC PUMP MUST ENGAGE AND RUN TO MAINTAIN DESIGN FLOW THROUGH PREHEAT COILS FOR A USER DEFINED AMOUNT OF TIME (ADJ).
3. HIGH STATIC SHUTDOWN: THE UNIT MUST SHUTDOWN AND GENERATE AN ALARM UPON RECEIVING A HIGH STATIC SHUTDOWN SIGNAL. SYSTEM MUST BE HARDWIRED TO SHUTDOWN UNIT.
4. SUPPLY AIR SMOKE DETECTION: THE UNIT MUST SHUTDOWN AND GENERATE AN ALARM UPON RECEIVING A SUPPLY AIR SMOKE DETECTOR STATUS. SYSTEM MUST BE HARDWIRED TO SHUTDOWN UNIT.
5. SUPPLY/EXHAUST FAN: IF ANY OF THE FOLLOWING OCCUR, AN ALARM MUST BE SENT TO THE DDC SYSTEM.
   A. FAN FAILURE: COMMANDED ON, BUT THE STATUS IS OFF.
   B. FAN IN HAND: COMMANDED OFF, BUT THE STATUS IS ON.
   C. FAN RUNTIME EXCEEDED: STATUS RUNTIME EXCEEDS A USER-DEFINED (ADJ) LIMIT.
6. COOLING COIL VALVE: IF ANY OF THE FOLLOWING OCCUR, AN ALARM MUST BE SENT TO THE DDC SYSTEM.
   F. HIGH SUPPLY AIR TEMP: IF THE SUPPLY AIR TEMPERATURE IS 5°F (ADJ) GREATER THAN SETPOINT.
7. FILTER DIFFERENTIAL PRESSURE: IF ANY OF THE FOLLOWING OCCUR, AN ALARM MUST BE SENT TO THE DDC SYSTEM.
   A. FILTER CHANGE REQUIRED: FILTER DIFFERENTIAL PRESSURE EXCEEDS A USER DEFINED LIMIT (ADJ).
8. RETURN AIR: IF ANY OF THE FOLLOWING OCCUR, AN ALARM MUST BE SENT TO THE DDC SYSTEM.
   A. HIGH RETURN AIR HUMIDITY: IF THE RETURN AIR HUMIDITY IS GREATER THAN 60% (ADJ).
   B. LOW RETURN AIR HUMIDITY: IF THE RETURN AIR HUMIDITY IS LESS THAN 35% (ADJ).
   C. HIGH RETURN AIR TEMPERATURE: IF THE RETURN AIR TEMPERATURE IS GREATER THAN 90°F (ADJ).
   D. LOW RETURN AIR TEMPERATURE: IF THE RETURN AIR TEMPERATURE IS LESS THAN 45°F (ADJ).
9. SUPPLY AIR: IF ANY OF THE FOLLOWING OCCUR, AN ALARM MUST BE SENT TO THE DDC SYSTEM.
   A. HIGH SUPPLY AIR TEMPERATURE: IF THE SUPPLY AIR TEMPERATURE IS GREATER THAN 120°F (ADJ).
   B. LOW SUPPLY AIR TEMPERATURE: IF THE SUPPLY AIR TEMPERATURE IS LESS THAN 45°F (ADJ).
10. OA & EA DAMPER: IF ANY OF THE FOLLOWING OCCUR, AN ALARM MUST BE SENT TO THE DDC SYSTEM.
   A. DAMPER FAILURE: COMMANDED OPEN, BUT THE STATUS IS CLOSED
11. SAFETY SHUTDOWN AND ALARMS: ALL ALARMS IN THE POINTS SCHEDULE SHALL BE SENT TO THE AHU DDC SYSTEM.
12. FIRE ALARM SHUTDOWN: IF THE BUILDING FIRE ALARM CONTROL PANEL SIGNALS AN ALARM, ALL FANS SHALL DE-ENERGIZE AND ALL DAMPERS SHALL CLOSE.

A3 SINGLE ZONE AIR HANDLER CONTROLS
NTS

SYM	DESCRIPTION	DATE	APPR

NAVFAC

SEAL: 05-08-26

CRENSHAW CONSULTING Engineers
NC LICENSE #C-1164 | www.crenshawconsulting.com | 3836 Bush Street, Suite 200 Raleigh, North Carolina 27609 | 919-871-9270 Fax 871-5620

A/E INFO

APPROVED
Jeffrey S. Crenshaw, P.E.
FOR COMMANDER NAVFAC 5/13/2026
ACTIVITY

SATISFACTORY TO

DES	MPM	DRW	MAS	CHK	LWM
PM/DM	SLG/MDM				
BRANCH MANAGER	WRB				
CHIEF ENG/ARCH	JWJ				
FIRE PROTECTION	HPN				

DEPARTMENT OF THE NAVY
NAVAL FACILITIES ENGINEERING SYSTEMS COMMAND
MIDLANT DC CORE
MARINE CORPS BASE
NAVAL FACILITIES ENGINEERING SYSTEMS COMMAND ~ MIDATLANTIC
NAVAL STATION - NORFOLK, VA.
CAMP LEJEUNE, NC
P-1550 SOF MARINE RAIDER BATTALION / COMPANY / TEAM FACILITIES
MECHANICAL CONTROLS

SCALE: AS INDICATED
EPROJECT NO.: 1701820
CONSTR. CONTR. NO.

NAVFAC DRAWING NO. 12903836
SHEET 94 OF 122
A3 CO STG
M-704
FINAL SUBMITTAL
DRAWFORM REVISION: 25 AUGUST 2020

File Path: M:\Camp Lejeune\MARSOC SOF Marine Bn HQ_Team (P-1550)\A3 STORAGE
Print Date: 5/6/2026 5:16:11 PM

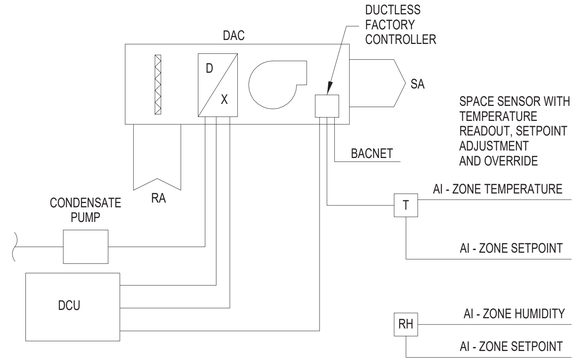

SEQUENCE OF OPERATION

DAC / DCU:

NORMAL MODE:
THE UNIT IS TO OPERATE ON ITS OWN INTERNAL FACTORY CONTROLS AND WILL RUN WITH AUTOMATIC SWITCHOVER BETWEEN HEATING AND COOLING MODES TO TO MAINTAIN ROOM STAT COOLING SETPOINT AS LISTED IN SPACE DESIGN CONDITIONS SCHEDULE.

SETPOINT ADJUST:
THE OCCUPANT MUST BE ABLE TO ADJUST THE UNIT TEMPERATURE HEATING AND COOLING SETPOINTS AT THE UNIT THERMOSTAT.

MONITORING:
THE FACTORY CONTROLLER MUST REPORT THE FOLLOWING TO THE BAS:

- ZONE TEMPERATURE
- ZONE SETPOINT ADJUST
- COOLING ENABLE
- HEATING ENABLE
- ZONE RELATIVE HUMIDITY (DAC-1)

ALARMS ARE TO BE PROVIDED AS FOLLOWS:

- HIGH ZONE TEMP: IF THE ZONE TEMPERATURE IS GREATER THAN THE COOLING SETPOINT BY A USER DEFINED AMOUNT (ADJ).
- LOW ZONE TEMP: IF THE ZONE TEMPERATURE IS LESS THAN THE HEATING SETPOINT BY A USER DEFINABLE AMOUNT (ADJ).
- CONDENSATE ALARM: IF THE CONDENSATE OVERFLOR SENSOR CONNECTED TO CONDENSATE PUMP SIGNALS A FAULT. UPON ALARM, DUCTLESS SPLIT SYSTEM MUST SHUTDOWN.
- HIGH ZONE RH: IF THE ZONE RELATIVE HUMIDITY IS GREATER THAN THE MAXIMUM SETPOINT BY A USER DEFINED AMOUNT (ADJ).
- LOW ZONE RH: IF THE ZONE RELATIVE HUMIDITY IS LESS THAN THE MINIMUM SETPOINT BY A USER DEFINABLE AMOUNT (ADJ).

DAC UNIT POINTS LIST

POINT NAME	HARDWARE				SOFTWARE				ALARM SP	SHOW ON GRAPHICS
	AI	AO	BI	BO	AV	BV	TREND	ALARM		
ZONE HIGH TEMP ALARM								●		
ZONE LOW TEMP ALARM								●		
ZONE SETPOINT ADJUST	●									●
ZONE TEMP	●						●			●
COOLING ENABLE			●							●
HEATING ENABLE			●							●
DUCTLESS SPLIT BACNET						●				●
CONDENSATE ALARM								●	OFF	
ZONE HIGH RH ALARM								●		
ZONE LOW RH ALARM								●		
ZONE RH SETPOINT ADJUST	●									●
ZONE RH	●						●			●

A2 DUCTLESS SPLIT UNIT CONTROL DETAIL
NTS

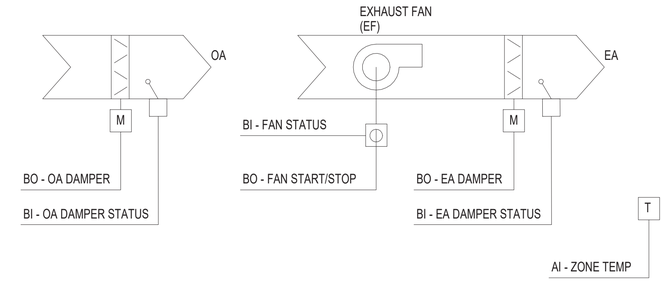

SEQUENCE OF OPERATION

EXHAUST FAN (EF)

A. FAN:
1. THE FAN MUST BE CONTINUOUSLY ENABLED TO MAINTAIN ZONE TEMPERATURE COOLING SETPOINT AS LISTED IN DESIGN CONDITIONS SCHEDULE.
2. ALARMS MUST BE PROVIDED AS FOLLOWS:
   - HIGH ZONE TEMPERATURE: IF THE ZONE TEMPERATURE IS GREATER THAN 15° (ADJ) ABOVE AMBIENT.

B. EXHAUST/ OUTSIDE AIR DAMPERS:
1. BOTH DAMPERS MUST OPEN ANYTIME THE UNIT RUNS AND CLOSE ANYTIME THE UNIT STOPS. THE DAMPERS MUST HAVE A 30 SECOND (ADJ) DELAY TIMER AFTER THE FAN STOPS.

C. ALARMS MUST BE PROVIDED AS FOLLOWS:
- DAMPER FAILURE: COMMANDED OPEN, BUT STATUS IS CLOSED.
- DAMPER IN HAND: COMMANDED CLOSED, BUT THE STATUS IS OPEN.

D. THE CONTROLLER TO MONITOR THE FAN STATUS AND ALARMS PROVIDED AS FOLLOWS:
- FAN FAILURE: COMMANDED ON, BUT THE STATUS IS OFF.
- FAN IN HAND: COMMANDED OFF, BUT THE STATUS IS ON.
- FAN RUNTIME EXCEEDED: FAN STATUS RUNTIME EXCEEDS USER DEFINED LIMIT (ADJ)

HVAC ATFP SHUTDOWN SWITCH: UPON ACTIVATION OF THE HVAC ATFP EMERGENCY SHUTDOWN SWITCH, BOTH FANS WILL SHUT DOWN AND BOTH DAMPERS WILL CLOSE REGARDLESS OF HAND/OFF/AUTO (HOA) POSITION WITHIN 30 SECONDS OF SWITCH ACTIVATION.

EXHAUST FAN (EF) POINTS LIST

POINT NAME	HARDWARE				SOFTWARE				FAILURE MODE	SHOW ON GRAPHICS
	AI	AO	BI	BO	AV	BV	TREND	ALARM		
EXHAUST FAN START/STOP				●			●		OFF	●
EXHAUST FAN STATUS			●				●	●		●
EXHAUST DAMPER				●			●		CLOSED	●
EXHAUST DAMPER STATUS			●				●			●
ZONE TEMP	●						●			●
COOLING SETPOINT					●		●			●
OA INTAKE DAMPER				●			●		CLOSED	●
OA AIR INTAKE DAMPER STATUS			●				●			●
EXHAUST AIR DAMPER FAILURE								●		
EXHAUST AIR DAMPER IN HAND								●		
EXHAUST FAN FAILURE								●		
EXHAUST FAN IN HAND								●		
EXHAUST FAN RUNTIME EXCEEDED								●		

A4 EXHAUST FAN (EF-1) CONTROLS
NTS

SYM	DESCRIPTION	DATE	APPR

NAVFAC

JOHN CARO SEAL 056500 ENGINEER NORTH CAROLINA
05-08-26
SEAL

CRENSHAW CONSULTING Engineers
NC LICENSE #C-1562 www.crenshawconsulting.com 3516 Bush Street, Suite 200 Raleigh, North Carolina 27609 919-871-9270 Fax: 871-5620

A/E INFO

APPROVED
FOR COMMANDER NAVFAC 5/13/2026
ACTIVITY

SATISFACTORY TO

DES	MPM	DRW	MAS	CHK	LWM
PM/DM	SLG/MDM				
BRANCH MANAGER	WRB				
CHIEF ENG/ARCH	JWJ				
FIRE PROTECTION	HPN				

NAVAL FACILITIES ENGINEERING SYSTEMS COMMAND
NAVAL FACILITIES ENGINEERING SYSTEMS COMMAND ~ MIDATLANTIC
NAVAL STATION - NORFOLK, VA
CAMP LEJEUNE, NC
P-1550 SOF MARINE RAIDER BATTALION / COMPANY / TEAM FACILITIES
MECHANICAL CONTROLS
DEPARTMENT OF THE NAVY
MIDLANT DC CORE
MARINE CORPS BASE

SCALE: AS INDICATED
EPROJECT NO.: 1701820
CONSTR. CONTR. NO.

A3
CO STG
NAVFAC DRAWING NO. 12903837
SHEET 95 OF 122
M-705

FINAL SUBMITTAL
DRAWFORM REVISION: 25 AUGUST 2020

File Path: M:\Camp Lejeune\MARSOC SOF Marine Bn HQ_Team (P-1550)\A3 STORAGE
Print Date: 5/6/2026 5:16:12 PM

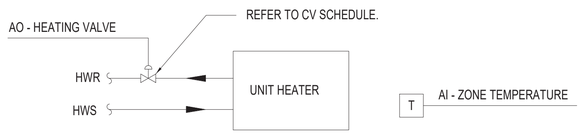

SEQUENCE OF OPERATION

UNIT HEATER UH-1,2,3 CONTROL:

THE UNIT HEATER SHALL BE ENERGIZED TO MAINTAIN THE SPACE TEMPERATURE SET BY THE USER. IT WILL BE CONTROLLED BY A WALL-MOUNTED THERMOSTAT. WHEN THE SPACE TEMPERATURE FALLS BELOW THE SETPOINT THE FAN SHALL START AND THE HOT WATER VALVE SHALL OPEN. WHEN THE TEMPERATURE RISES ABOVE THE SETPOINT THE FAN SHALL STOP AND THE VALVE SHALL CLOSE.

UNIT HEATER POINTS LIST

POINT NAME	HARDWARE				SOFTWARE				ALARM SETPOINT	SHOW ON GRAPHICS
	AI	AO	BI	BO	AV	BV	TREND	ALARM		
ZONE TEMPERATURE SENSOR	●						●	●	SETPOINT + 5 DEG	●
REHEAT COIL VALVE		●					●			●

C1 UNIT HEATER CONTROL DETAIL
NTS

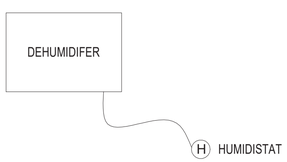

SEQUENCE OF OPERATION

DEHUMIDIFIER (DH-1)

A. THE DEHUMIDIFIER IS TO BE CONTROLLED BY A BUILT-IN HUMIDISTAT WITH AN OPERATING SETPOINT AT 65% (ADJ). WHEN THE HUMIDISTAT SENSES HUMIDITY LEVELS HIGHER THAN THE SETPOINT, THE DEHUMIDIFIER MUST ENGAGE AND OPERATE UNTIL HUMIDITY LEVEL REACHES 60% (ADJ).

DEHUMIDIFIER POINTS LIST

POINT NAME	HARDWARE				SOFTWARE				SHOW ON GRAPHICS
	AI	AO	BI	BO	AV	BV	TREND	ALARM	
ZONE HIGH HUMIDITY ALARM	●							●	
ZONE SETPOINT ADJUST	●								●
ZONE HUMIDITY LEVEL	●								●
ENABLE			●						●

A1 DEHUMIDIFIER CONTROL DETAIL
NTS

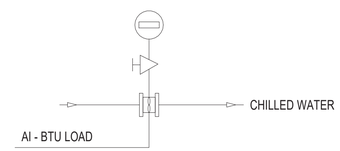

NOTE: NEW BTU METER TO BE LOCATED IN MECHANICAL ROOM AND IS TO REPORT THROUGH THE DDC TO THE EMCS.

BTU METER:
THE CONTROLLER MUST MONITOR THE BTU METER FOR BTU LOAD ON A CONTINUAL BASIS. THESE VALUES MUST BE MADE AVAILABLE TO THE SYSTEM AT ALL TIMES.

ALARM MUST BE GENERATED AS FOLLOWS:
- METER FAILURE: SENSOR READING INDICATES A LOSS OF PULSE OUTPUT FROM THE GAS METER.

PEAK DEMAND HISTORY:
THE CONTROLLER MUST MONITOR AND RECORD THE PEAK (HIGH AND LOW) DEMAND READINGS FROM THE BTU METER. PEAK READINGS MUST BE RECORDED ON A DAILY, MONTH-TO-DATE AND YEAR-TO-DATE BASIS.

USAGE HISTORY:
THE CONTROLLER MUST MONITOR AND RECORD BTU METER READINGS SO AS TO PROVIDE A BTU CONSUMPTION HISTORY. USAGE READINGS MUST BE RECORDED ON A DAILY, MONTH-TO-DATE AND YEAR-TO-DATE BASIS.

BTU METER POINTS LIST

POINT NAME	HARDWARE				SOFTWARE				SHOW ON GRAPHICS
	AI	AO	BI	BO	AV	BV	TREND	ALARM	
BTU LOAD	●								●
DEMAND							●		●
PEAK MONTH-TO-DATE							●		●
PEAK TODAY							●		●
PEAK YEAR-TO-DATE							●		●
USAGE MONTH-TO-DATE							●		●
USAGE TODAY							●		●
USAGE YEAR-TO-DATE							●		●
METER FAILURE								●	

A2 BTU METER CONTROL DETAIL
NTS

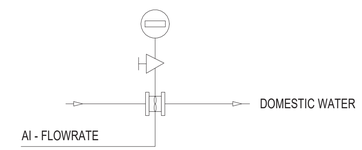

NOTE: NEW WATER METER TO BE LOCATED IN MECHANICAL ROOM AND IS TO REPORT THROUGH THE DDC TO THE EMCS.

WATER METER:
THE CONTROLLER MUST MONITOR THE WATER METER FOR WATER CONSUMPTION ON A CONTINUAL BASIS. THESE VALUES MUST BE MADE AVAILABLE TO THE SYSTEM AT ALL TIMES.

ALARM MUST BE GENERATED AS FOLLOWS:
- METER FAILURE: SENSOR READING INDICATES A LOSS OF PULSE OUTPUT FROM THE GAS METER.

PEAK DEMAND HISTORY:
THE CONTROLLER MUST MONITOR AND RECORD THE PEAK (HIGH AND LOW) DEMAND READINGS FROM THE WATER METER. PEAK READINGS MUST BE RECORDED ON A DAILY, MONTH-TO-DATE AND YEAR-TO-DATE BASIS.

USAGE HISTORY:
THE CONTROLLER MUST MONITOR AND RECORD WATER METER READINGS SO AS TO PROVIDE A WATER CONSUMPTION HISTORY. USAGE READINGS MUST BE RECORDED ON A DAILY, MONTH-TO-DATE AND YEAR-TO-DATE BASIS.

WATER METER POINTS LIST

POINT NAME	HARDWARE				SOFTWARE				SHOW ON GRAPHICS
	AI	AO	BI	BO	AV	BV	TREND	ALARM	
WATER FLOW RATE	●								●
DEMAND							●		●
PEAK MONTH-TO-DATE							●		●
PEAK TODAY							●		●
PEAK YEAR-TO-DATE							●		●
USAGE MONTH-TO-DATE							●		●
USAGE TODAY							●		●
USAGE YEAR-TO-DATE							●		●
METER FAILURE								●	

A4 WATER METER CONTROL DETAIL
NTS

APPR	DATE	DESCRIPTION	SYM

NAVFAC

JOHN CARO SEAL 056500 ENGINEER
05-08-26
SEAL

CRENSHAW CONSULTING Engineers
NC LICENSE #C-1162 www.crenshawconsulting.com 3836 Bush Street, Suite 200 Raleigh, North Carolina 27609 919-871-9270 Fax 871-9620

A/E INFO

APPROVED
FOR COMMANDER NAVFAC 5/13/2026
ACTIVITY

SATISFACTORY TO
DES MPM DRW MAS CHK LWM
PM/DM SLG/MDM
BRANCH MANAGER WRB
CHIEF ENG/ARCH JWJ
FIRE PROTECTION HPN

DEPARTMENT OF THE NAVY
NAVAL FACILITIES ENGINEERING SYSTEMS COMMAND
MIDLANT DC CORE
MARINE CORPS BASE
NAVAL FACILITIES ENGINEERING SYSTEMS COMMAND ~ MIDATLANTIC
NAVAL STATION - NORFOLK, VA.
CAMP LEJEUNE, NC
P-1550 SOF MARINE RAIDER
BATTALION / COMPANY / TEAM FACILITIES
MECHANICAL CONTROLS

SCALE: AS INDICATED
EPROJECT NO.: 1701820
CONSTR. CONTR. NO.

NAVFAC DRAWING NO. 12903838
SHEET 96 OF 122
A3
CO STG
M-706
FINAL SUBMITTAL
DRAWFORM REVISION: 25 AUGUST 2020

File Path: M:\Camp Lejeune\MARSOC SOF Marine Bn HQ_Team (P-1550)\A3 STORAGE
Print Date: 5/6/2026 5:16:13 PM

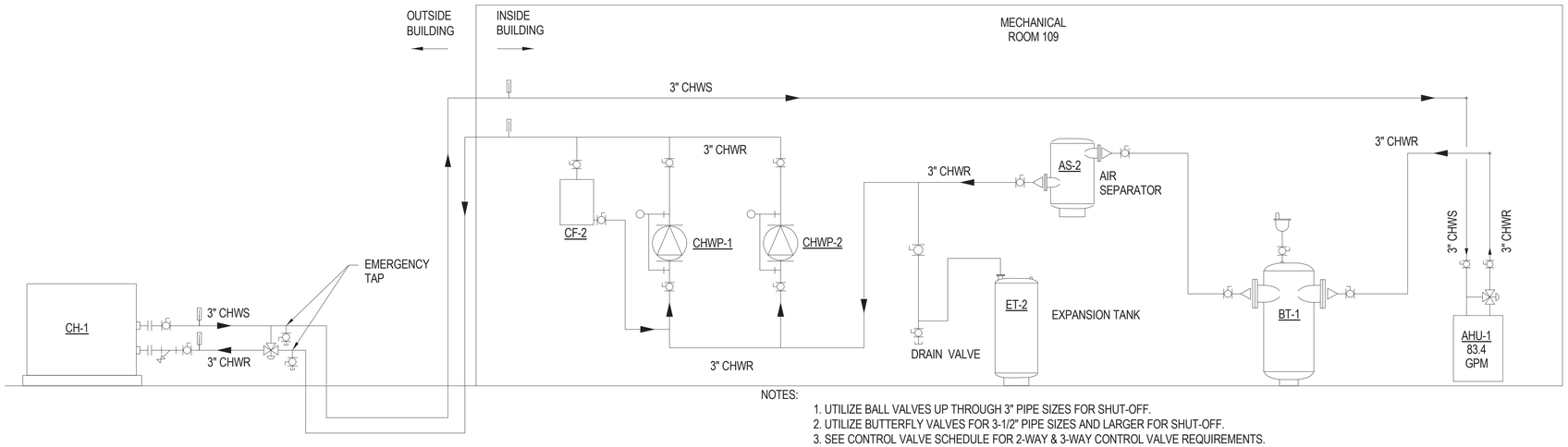

NOTES:

1. UTILIZE BALL VALVES UP THROUGH 3" PIPE SIZES FOR SHUT-OFF.
2. UTILIZE BUTTERFLY VALVES FOR 3-1/2" PIPE SIZES AND LARGER FOR SHUT-OFF.
3. SEE CONTROL VALVE SCHEDULE FOR 2-WAY & 3-WAY CONTROL VALVE REQUIREMENTS.

C1 CHILLED WATER SYSTEM DIAGRAM

NTS

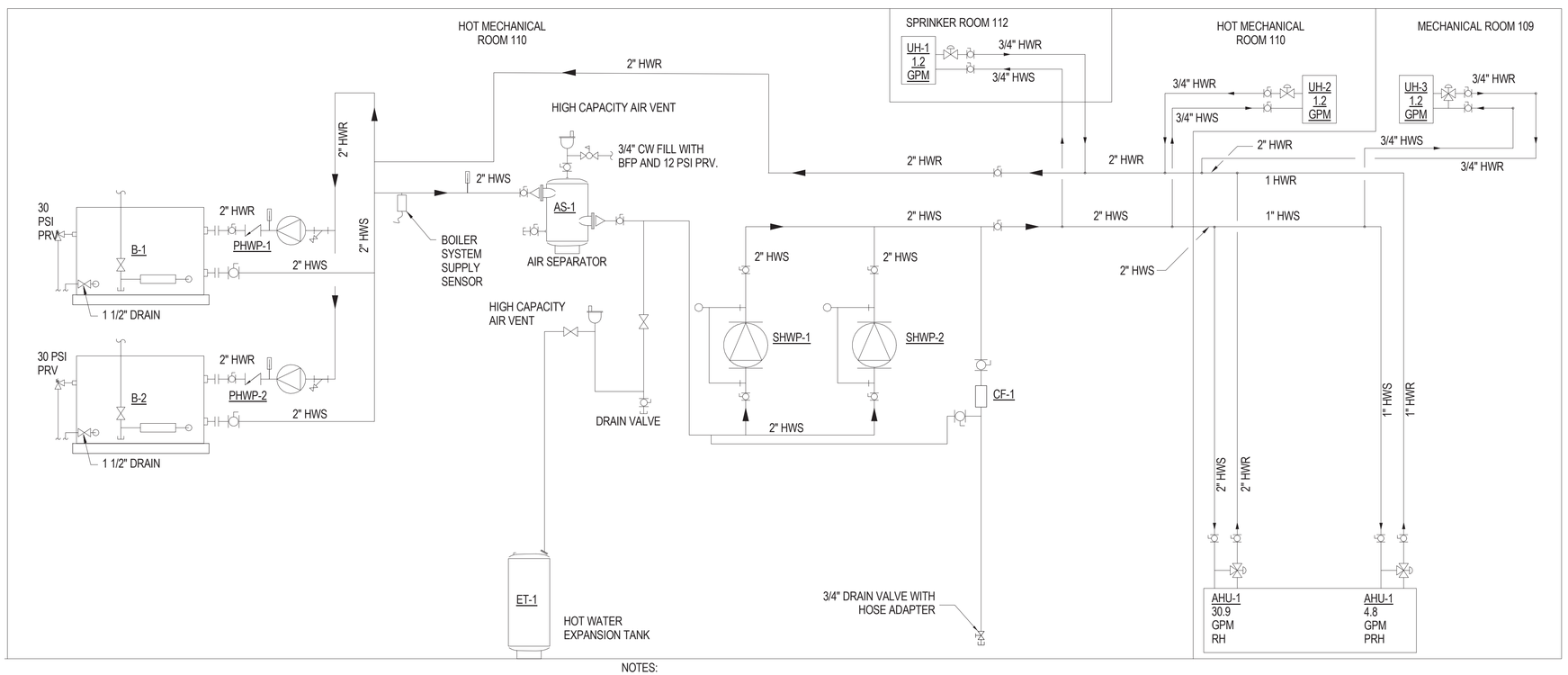

NOTES:

1. UTILIZE BALL VALVES UP THROUGH 2" PIPE SIZES FOR SHUT-OFF.
2. UTILIZE BUTTERFLY VALVES FOR 2-1/2" PIPE SIZES AND LARGER FOR SHUT-OFF.
3. SEE CONTROL VALVE SCHEDULE FOR 2-WAY & 3-WAY CONTROL VALVE REQUIREMENTS.

A1 HOT WATER SYSTEM DIAGRAM

NTS

SYM	DESCRIPTION	DATE	APPR

NAVFAC

SEAL 05-08-26

CRENSHAW CONSULTING Engineers
NC LICENSE #C-1164 www.crenshawconsulting.com 3518 Bush Street, Suite 200 Raleigh, North Carolina 27609 919-871-9270 Fax 871-5620

A/E INFO

APPROVED FOR COMMANDER NAVFAC 5/13/2026

ACTIVITY

SATISFACTORY TO

DES	MPM	DRW	MAS	CHK	LWM
PM/DM	SLG/MDM				
BRANCH MANAGER	WRB				
CHIEF ENG/ARCH	JWJ				
FIRE PROTECTION	HPN				

DEPARTMENT OF THE NAVY
NAVAL FACILITIES ENGINEERING SYSTEMS COMMAND
MIDLANT DC CORE
MARINE CORPS BASE

NAVAL FACILITIES ENGINEERING SYSTEMS COMMAND ~ MIDATLANTIC
NAVAL STATION - NORFOLK, VA
CAMP LEJEUNE, NC

P-1550 SOF MARINE RAIDER BATTALION / COMPANY / TEAM FACILITIES

CHILLED AND HOT WATER SYSTEM DIAGRAMS

SCALE: AS INDICATED
EPROJECT NO.: 1701820
CONSTR. CONTR. NO.

NAVFAC DRAWING NO. 12903839
SHEET 97 OF 122

A3
CO STG

M-801

FINAL SUBMITTAL

DRAWFORM REVISION: 25 AUGUST 2020

File Path: M:\Camp Lejeune\MARSOC SOF Marine Bn HQ_Team (P-1550)\A3 STORAGE
Print Date: 5/6/2026 5:16:13 PM

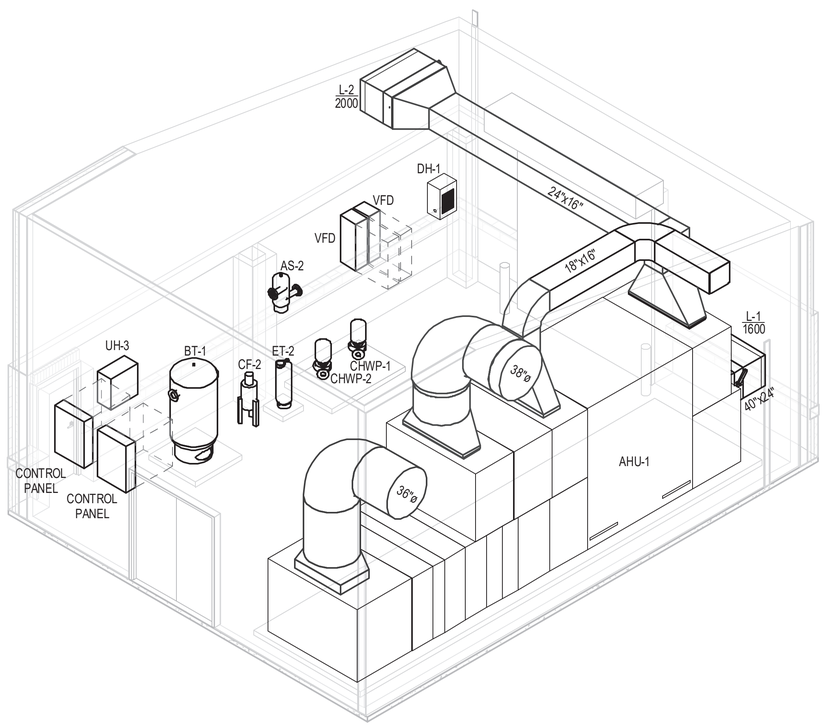

A1 MECHANICAL ROOM 109 - HVAC 3D ISOMETRIC

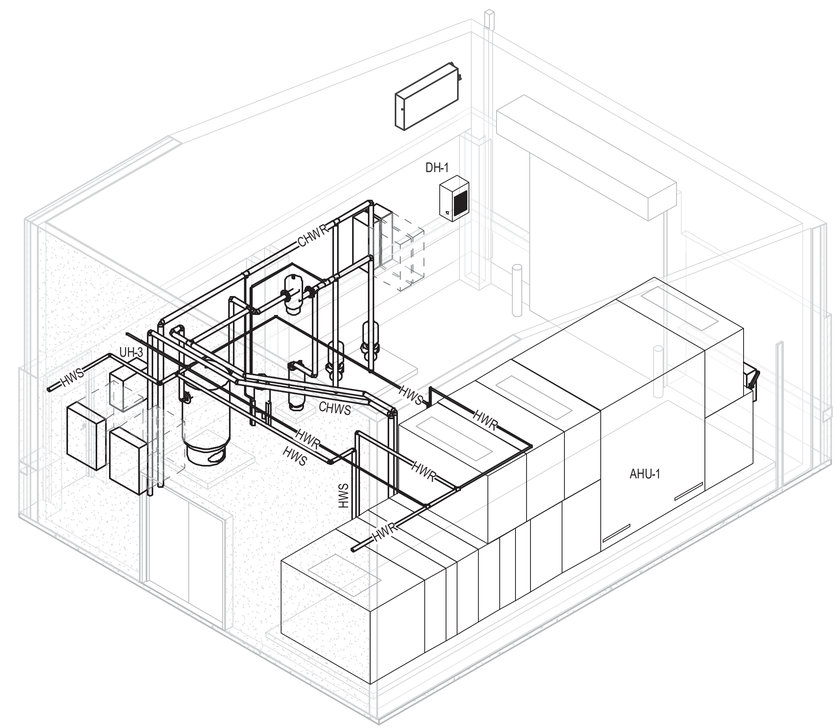

A4 MECHANICAL ROOM 109 - PIPING 3D ISOMETRIC

SYM	DESCRIPTION	DATE	APPR

NAVFAC

NORTH CAROLINA
SEAL
056500
PROFESSIONAL ENGINEER
JOHN J. MCFADDEN
05-08-26
SEAL

CRENSHAW CONSULTING Engineers
www.crenshawconsulting.com
NC LICENSE #C-1555
3516 Bush Street, Suite 300
Raleigh, North Carolina 27609
919-871-1070 Fax: 871-5020

A/E INFO

APPROVED
DONALD W. SCOTT
FOR COMMANDER NAVFAC 5/13/2026
ACTIVITY

SATISFACTORY TO

DES	MPM	DRW	MAS	CHK	LWM
PM/DM					SLG/MDM
BRANCH MANAGER					WRB
CHIEF ENGR/ARCH					JWJ
FIRE PROTECTION					HPN

DEPARTMENT OF THE NAVY
NAVAL FACILITIES ENGINEERING SYSTEMS COMMAND
MIDLANT DC CORE
MARINE CORPS BASE

NAVAL FACILITIES ENGINEERING SYSTEMS COMMAND ~ MIDATLANTIC
NAVAL STATION - NORFOLK, VA
CAMP LEJEUNE, NC

P-1550 SOF MARINE RAIDER
BATTALION / COMPANY / TEAM FACILITIES

MECHANICAL ROOM 109 - 3D ISOMETRIC VIEWS

SCALE: AS INDICATED
EPROJECT NO.: 1701820
CONSTR. CONTR. NO.

A3
CO STG

NAVFAC DRAWING NO.
12903840
SHEET 98 OF 122
M-901

FINAL SUBMITTAL
DRAWFORM REVISION: 25 AUGUST 2020

File Path: M:\Camp Lejeune\MARSOC SOF Marine Bn HQ_Team (P-1550)\A3 STORAGE
Print Date: 5/6/2026 5:16:19 PM

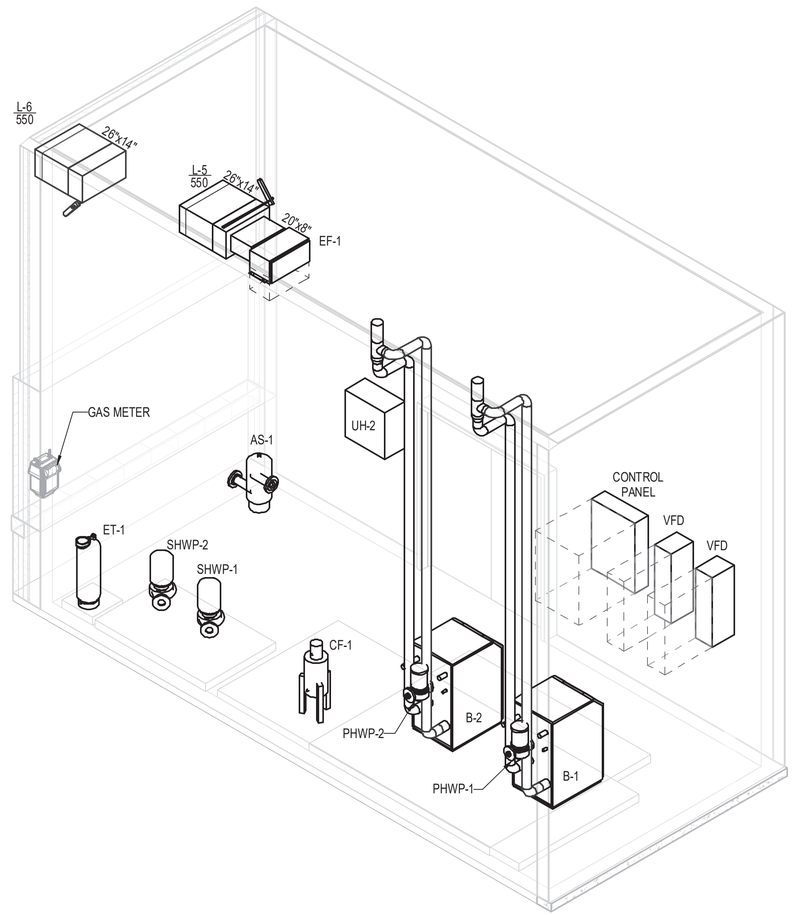

A1 HOT MECHANICAL ROOM 110 - HVAC 3D ISOMETRIC

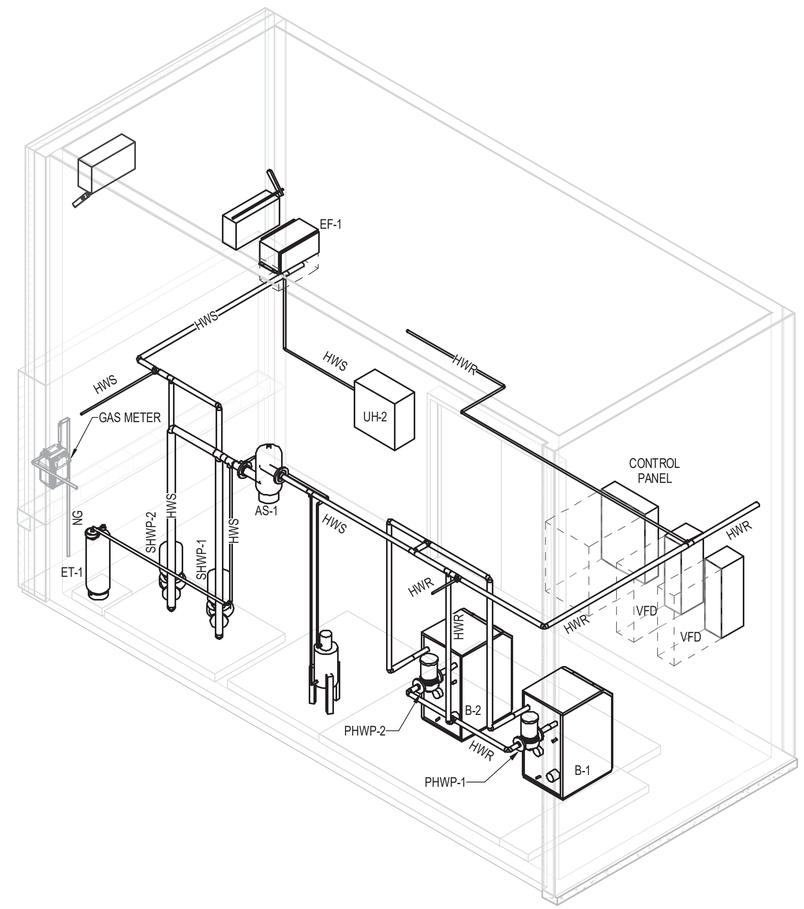

A4 HOT MECHANICAL ROOM 110 - PIPING 3D ISOMETRIC

SYM	DESCRIPTION	DATE	APPR

NAVFAC

NORTH CAROLINA PROFESSIONAL SEAL 056500 ENGINEER
05-08-26
SEAL

CRENSHAW CONSULTING Engineers
NC LICENSE #C-1558
Architecture & Engineering
918 Jones Street, Suite 500
Raleigh, North Carolina 27603
919-571-1070 Fax: 571-5020

A/E INFO

APPROVED
Jeffrey D. Crenshaw, P.E.
FOR COMMANDER NAVFAC 5/13/2026

ACTIVITY

SATISFACTORY TO

DES	MPM	DRW	MAS	CHK	LWM
PM/DM	SLG/MDM				
BRANCH MANAGER	WRB				
CHIEF ENG/ARCH	JWJ				
FIRE PROTECTION	HPN				

DEPARTMENT OF THE NAVY
NAVAL FACILITIES ENGINEERING SYSTEMS COMMAND
NAVAL FACILITIES ENGINEERING SYSTEMS COMMAND ~ MIDATLANTIC
NAVAL STATION - NORFOLK, VA.
MID.ANT.DC.CORE
MARINE CORPS BASE
CAMP LEJEUNE, NC

P-1550 SOF MARINE RAIDER
BATTALION / COMPANY / TEAM FACILITIES

HOT MECHANICAL ROOM 110 - 3D ISOMETRIC VIEWS

SCALE: AS INDICATED
EPROJECT NO.: 1701820
CONSTR. CONTR. NO.:

A3
CO STG

NAVFAC DRAWING NO.
12903841
SHEET 99 OF 122
M-902

FINAL SUBMITTAL
DRAWFORM REVISION: 25 AUGUST 2020

File Path: M:\Camp Lejeune\MARSOC SOF Marine Bn HQ_Team (P-1550)\A3 STORAGE
Print Date: 5/6/2026 5:16:22 PM

ELECTRICAL ABBREVIATIONS

AFF	ABOVE FINISHED FLOOR
A	AMPERES
ARCH	ARCHITECT
C	CONDUIT
EX	EXISTING
EXT	EXTERIOR
FA	FIRE ALARM
FURN	FURNITURE
GFI	GROUND-FAULT CIRCUIT INTERRUPTER
GFCI	GROUND-FAULT CIRCUIT INTERRUPTER
GND	GROUND
IG	ISOLATED GROUND
JB	JUNCTION BOX
MECH	MECHANICAL
NTS	NOT TO SCALE
OC	ON-CENTER
PLMB	PLUMBING
PROV	PROVIDED BY
SFC	SURFACE MOUNTED
TP	TAMPER PROOF
V	VOLTS
W/	WITH
WP	WEATHERPROOF AND RATED FOR EXTERIOR TEMPERATURES

GENERAL NOTES AND REQUIREMENTS

1. WORKMANSHIP MUST CONFORM TO NECA INSTALLATION STANDARDS INCLUDING NECA 1.
2. INSTALLATION MUST COMPLY WITH NATIONAL ELECTRICAL CODE, INTERNATIONAL BUILDING CODE, APPLICABLE UFCS AND ALL REQUIREMENTS OF THE LOCAL INSPECTOR (FURNISH INSPECTION CERTIFICATE). ALL WORK MUST BE BY LICENSED CONTRACTOR.
3. THE CONTRACTOR MUST REFER TO THE ARCHITECTURAL PLANS FOR FLOOR PLAN DIMENSIONS. DO NOT SCALE THESE DRAWINGS. THE LOCATION OF ALL WALL MOUNTED DEVICES, INCLUDING MOUNTING HEIGHTS, MUST BE COORDINATED WITH ARCHITECTURAL DRAWINGS PRIOR TO INSTALLATION. COORDINATE LOCATIONS OF ALL LIGHT FIXTURES WITH THE REFLECTED CEILING PLANS. LIGHT FIXTURES INSTALLED IN MECHANICAL AREAS MUST AVOID MECHANICAL PIPING, EQUIPMENT, DUCTWORK, ETC.
4. THE CONTRACTOR MUST COORDINATE ANY AND ALL WORK WITH OTHER TRADES INVOLVED IN THE PROJECT, PRIOR TO INSTALLATION OF ELEC. EQUIPMENT, SO AS TO AVOID CONFLICTS DURING CONSTRUCTION AND TO ALLOW FOR OPTIMUM MAINTENANCE AND WORKING SPACE.
5. CONDUITS AND CABLES MUST BE CONCEALED WHEREVER POSSIBLE BY EITHER ROUTING ABOVE CEILING, IN INTERSTITIAL SPACES OR RUNNING EXPOSED IN UNFINISHED SPACES AS MUCH AS FEASIBLE. CONDUITS MAY BE RUN EXPOSED IN MECHANICAL AREAS OR OTHER AREAS NOT SUBJECT TO PUBLIC VIEW WHERE APPROVED BY THE OWNER. WHEREVER CONDUITS OR CABLES ARE APPROVED TO BE EXPOSED, CONDUITS AND CABLES MUST BE RUN PARALLEL OR PERPENDICULAR TO STRUCTURAL ELEMENTS AND MUST BE RUN AND BUNDLED IN GROUPS, AND THE INSTALLATION MUST BE NEAT AND ORDERLY. EVEN WHEN EXPOSED, CONDUITS AND CABLES MUST BE ROUTED TO MINIMIZE VIEW FROM PERSONNEL. SEAL ALL PENETRATIONS AIR TIGHT AROUND ALL CONDUITS PASSING THROUGH WALLS OR FLOORS USING APPROPRIATE PENETRATION PROTECTION WHEN PASSING INTO OR THROUGH RATED ASSEMBLIES.
6. ALL LIGHT FIXTURES MUST BE SUPPORTED INDEPENDENTLY OF THE SUSPENDED CEILING SYSTEM.
7. WHERE BRANCH CIRCUIT TOTAL LENGTH IS GREATER THAN FIFTY (50) FEET FROM THE PANELBOARD, SEE VOLTAGE DROP SCHEDULE.
8. ALL MOUNTING HEIGHTS ARE GIVEN TO THE CENTER OF THE DEVICE UNLESS NOTED OTHERWISE.
9. ALL FUSES, DISCONNECT SWITCHES, AND BREAKER SIZES, SHOWN FOR MECHANICAL EQUIPMENT, MUST BE VERIFIED BEFORE THE PURCHASE OR INSTALLATION OF SAID EQUIPMENT, WITH THE EQUIPMENT SUPPLIER AND THE MECHANICAL CONTRACTOR.
10. ALL DISCONNECT SWITCHES ARE TO BE HEAVY DUTY FUSIBLE TYPE. FUSES MUST BE THE APPROPRIATE TYPE FOR THE LOAD SERVED. THE CONTRACTOR MUST COMPARE ALL INSTALLED EQUIPMENT NAMEPLATE INFORMATION WITH THE ELECTRICAL PLANS AND NOTIFY THE ENGINEER IMMEDIATELY WITH ANY DISCREPANCIES. THE CONTRACTOR MUST COORDINATE ALL FUSE SIZES WITH ACTUAL INSTALLED EQUIPMENT NAMEPLATE INFORMATION PRIOR TO PURCHASING OR INSTALLING FUSES. WHERE THE NAMEPLATE INFORMATION DOES NOT INDICATE AN OVERCURRENT PROTECTION SIZE OR MAXIMUM AMPACITY RATING, FUSES MUST BE INSTALLED AS INDICATED ON THE ELECTRICAL PLANS WHERE IN AGREEMENT WITH NAMEPLATE DATA.
11. THE CONTRACTOR MUST PROVIDE ALL NECESSARY DISCONNECTS, SWITCHES, AND RECEPTACLES UNDER THE BID AND MUST INCLUDE ALL NECESSARY CIRCUITS TO AND FINAL CONNECTIONS TO THE EQUIPMENT PROVIDED BY ALL SUPPLIERS, UNLESS NOTED OTHERWISE BY OTHER DISCIPLINES. COORDINATE CLOSELY.
12. ALL ELECTRICAL EQUIPMENT MUST BE INSTALLED SO THAT ALL CODE-REQUIRED AND MANUFACTURER-RECOMMENDED SERVICING CLEARANCES ARE MAINTAINED. INSTALLATIONS MUST FULLY COMPLY WITH NEC 110.26 AND NEC 408.18 FOR CLEARANCE REQUIREMENTS.
13. PROVIDE GROUNDING CONDUCTOR FOR ALL CIRCUITS PER N.E.C. GROUNDING SYSTEMS MUST MEET ALL REQUIREMENTS OF NEC 250.
14. THE CONTRACTOR MUST PATCH ANY WALL, CEILING, OR FLOOR OPENINGS AND PENETRATIONS RESULTING FROM DEMOLITION OR NEW WORK IN EXISTING AREAS. PATCH MUST MEET OR EXCEED THE STRUCTURE'S INTEGRITY AND FIRE RATING. FINISH MUST MATCH STRUCTURE'S FINISH.
15. ALL MULTIWIRE BRANCH CIRCUITS MUST HAVE MULTIPOLE BREAKERS AS REQUIRED BY NEC 210.4(B).
16. ALL CIRCUITS MUST BE TESTED WITH 500 VOLT TESTER PRIOR TO ENERGIZING.
17. ALL WALL OUTLET BOXES, RECEPTACLES, SWITCHES, COVERPLATES, ETC. MUST BE COMMERCIAL SPECIFICATION GRADE, STANDARD OR HEAVY DUTY. SEE BOOK SPECIFICATIONS FOR ADDITIONAL DETAILS. VERIFY COLOR / MATERIALS FOR ALL DEVICES AND COVERPLATES PRIOR TO PURCHASE. PROVIDE LABEL FOR EACH DEVICE IDENTIFYING THE CIRCUIT SERVING THE DEVICE. VERIFY IF LABEL SHOULD BE ON INSIDE OR OUTSIDE FACE OF COVERPLATE WITH OWNER/TENANT.
18. IT IS THE SOLE RESPONSIBILITY OF THE CONTRACTOR TO COORDINATE W/ ALL OTHER TRADES REGARDING VOLTAGES, LOADS, CIRCUIT BREAKERS, ETC. PRIOR TO BEGINNING ANY WORK.
19. AS USED ON THESE DOCUMENTS, THE WORD "PROVIDE" MEANS TO FURNISH AND INSTALL THE ITEM OR EQUIPMENT AND MAKE THE FINAL CONNECTION AS REQUIRED.
20. ALL PANELS MUST BE STANDARD COMMERCIAL GRADE FROM A REPUTABLE NATIONAL MANUFACTURER AS SPECIFIED IN BOOK SPECIFICATIONS OR ON PLANS. PANELS MUST BE RATED AS INDICATED ON PANEL SCHEDULES.
21. CONTRACTOR IS RESPONSIBLE TO COMPLY WITH ALL REQUIREMENTS OF THE INTERNATIONAL BUILDING CODE, ABA, AND UFCS WHICH ARE APPLICABLE TO THIS PROJECT REGARDLESS OF WHETHER ALL DETAILS ARE INDICATED ON PLANS.
22. CONTRACTOR MUST COMPLY WITH ALL APPLICABLE SEISMIC REQUIREMENTS.
23. ELECTRICAL BOXES AND WIRING MUST NOT BE RECESSED INTO OR PENETRATE STRUCTURAL COLUMNS. BOXES/CONDUITS MUST BE SURFACE MOUNTED TO COLUMN AND/OR RECESSED IN STUD WALL WHERE POSSIBLE. COORDINATE WITH ARCHITECT.
24. ALL RECEPTACLES, SWITCHES, AND ELECTRICAL DEVICES REQUIRED TO BE ABA ACCESSIBLE MUST BE MOUNTED PER ANSI 117.1 SECTIONS 308 AND 309.
25. ALL EQUIPMENT CONNECTED TO OR ASSOCIATED WITH THE ELECTRICAL, FIRE ALARM OR TELECOM SYSTEMS OR OTHERWISE INCLUDED IN THE SCOPE OF WORK MUST BE LISTED AND LABELED BY A THIRD PARTY ACCEPTABLE TO THE AUTHORITY HAVING JURISDICTION.
26. CONTRACTOR MUST PROVIDE ROUGH-INS FOR ALL CONTRACTOR PROVIDED EQUIPMENT (INCLUDING SUB-CONTRACTED EQUIPMENT AS APPLICABLE) AND DEVICES LOCATED ON THESE PLANS IN ACCORDANCE WITH NEC, NFPA, AND MANUFACTURER REQUIREMENTS. UNLESS OTHERWISE NOTED, BOX PROVIDED MUST BE SUITABLE FOR AND SIZED FOR THE PURPOSE, WITH A MINIMUM 3/4" CONDUIT TO ACCESSIBLE LOCATION ABOVE CEILING OR CONDUIT SIZED AS APPROPRIATE FOR THE DEVICE IN QUESTION.

LINETYPE LEGEND

————————	NEW DEVICE
– – – – – – – – – –	NEW UNDERGROUND OR UNDERSLAB CONNECTION. NEW CONNECTIONS NOT SPECIFICALLY SHOWN WITH UNDERGROUND LINETYPE ARE NOT NECESSARILY REQUIRED TO BE RUN OVERHEAD UNLESS NOTED AS SUCH.
—·—·—·—·—·—	NEW LIGHTING CIRCUITRY TO INDICATE CONNECTION OF INDIVIDUAL ROOMS OR ZONES TO A COMMON CIRCUIT.

VOLTAGE DROP SCHEDULE

120 VOLT BRANCH CIRCUITS UP TO 8 AMPS (<1.0 KVA)

RUN DISTANCE IN FEET	WIRE SIZE AWG
1' - 120'	#12
121' - 190'	#10
191' - 300'	#8
301' - 470'	#6

120 VOLT BRANCH CIRCUITS 9 AMPS TO 14 AMPS (1-1.7 KVA)

RUN DISTANCE IN FEET	WIRE SIZE AWG
1' - 65'	#12
66' - 110'	#10
111' - 170'	#8
171' - 270'	#6

277 VOLT BRANCH CIRCUITS UP TO 14 AMPS (<3.9 KVA)

RUN DISTANCE IN FEET	WIRE SIZE AWG
1' - 160'	#12
161' - 250'	#10
251' - 390'	#8
391' - 620'	#6

WIRE SIZES INDICATED IN GENERAL NOTES AND CONNECTIONS SCHEDULES ARE MINIMUM WIRE SIZES. CONTRACTOR MUST UPSIZE WIRES BASED ON LOAD AND LENGTH OF RUN AS INDICATED IN SCHEDULE ABOVE.

POWER SYMBOL LEGEND

SYMBOL	TYPICAL HEIGHT	DESCRIPTION
	---	HOMERUN TO PANEL/BRANCH CIRCUIT CONNECTION. SHORT TICKS REPRESENT PHASE CONDUCTORS. LONG TICKS REPRESENT GROUNDED CONDUCTORS. EQUIPMENT GROUNDING CONDUCTOR IS NOT SHOWN BUT ALWAYS REQUIRED. MINIMUM SIZE PER NEC BASED ON CIRCUIT BREAKER, SCHEDULE, AND VOLTAGE DROP TABLE.
	---	CIRCUIT WIRE. CONDUCTORS MUST MATCH THAT OF THE ASSOCIATED HOMERUN.
	---	CIRCUIT WIRE. FUNCTION AS INDICATED ON PLANS.
	18"	NEMA 5-20R DUPLEX RECEPTACLE
	18"	NEMA 5-20R DUPLEX RECEPTACLE, SPLIT-CIRCUIT: BOTTOM RECEPTACLE SWITCHED, TOP UNSWITCHED.
	18"	NEMA 5-20R QUADRAPLEX RECEPTACLE
	18"	POWER RECEPTACLE, NEMA CONFIGURATION AS NOTED RECEPTACLE MODIFIERS: • G: GROUND-FAULT CURRENT INTERRUPTER • A: 3" ABOVE COUNTER OR BACKSPLASH • WP: WEATHERPROOF IN-USE ENCLOSURE • C: FLUSH IN CEILING TILE • U: INTEGRAL USB TYPE A CHARGER • TV: MOUNTED IN A/V/ BACKBOX. COORDINATE EXACT HEIGHT WITH USER. NOTE: MODIFIERS MAY BE COMBINED (E.G. 'AG' IS A COMBINATION OF 'A' AND 'G'.)
J	18"	JUNCTION BOX, WALL-MOUNTED, PURPOSE AS NOTED
J	--	JUNCTION BOX, ABOVE OR ON CEILING, PURPOSE AS NOTED
	---	POWER TRANSFORMER, WITH HOUSEKEEPING PAD
	---	PANELBOARD OR OTHER ELECTRICAL EQUIPMENT
	---	DISCONNECT SWITCH, FUSED
$	44" BOTTOM	TOGGLE SWITCH
		SWITCH MODIFIERS: • M: MOTOR-RATED

HEIGHTS ARE TO THE BOTTOM OF THE DEVICE UNLESS NOTED OTHERWISE.
TOP: HEIGHT TO THE TOP OF THE DEVICE
BOTTOM: HEIGHT TO THE BOTTOM OF THE DEVICE.
HEIGHTS ARE TYPICAL AND MAY BE SUPERCEDED BY PLANS.

ELECTRICAL RISER SYMBOL LEGEND

SYMBOL	DESCRIPTION
P	ELECTRICAL PANEL
480Δ-208Y/120V	DRY TYPE ELECTRICAL TRANSFORMER
	FUSIBLE DISCONNECT. FRAME AND FUSE AS INDICATED.
M	ELECTRICAL METER W/ METER BASE AS APPROPRIATE.
###	CONTACTOR. AMPACITY AND POLES AS NOTED.
SPD	SURGE PROTECTIVE DEVICE.
	GROUNDING ELECTRODE

LIGHTING SYMBOL LEGEND

SYMBOL	TYPICAL HEIGHT	DESCRIPTION
$	44"	TOGGLE SWITCH SWITCH MODIFIERS: • 2: DOUBLE-POLE SWITCH • 3: THREE-WAY • 4: FOUR-WAY • S: OCCUPANCY SENSOR (AUTO ON/AUTO OFF) • V: VACANCY SENSOR (MANUAL ON/AUTO OFF) • L: LOW VOLTAGE SWITCH. PROVIDE COMPATIBLE POWER PACK AS REQUIRED. • D: DIMMING (SUITABLE FOR DIMMING TECHNOLOGY) • T: DIGITAL TIMER, ADJUSTABLE TO 12 HOURS • WP: IN WEATHERPROOF ENCLOSURE • MODIFIERS MAY BE COMBINED. (E.G. "LVD" IS A LOW VOLTAGE, DIMMING SWITCH WITH VACANCY SENSOR.)
S1 S2 S3	---	CEILING/WALL SENSOR. PROVIDE POWER PACKS AND OTHER ACCESSORIES AS REQUIRED BY LIGHTING CONTROL TECHNOLOGY. 'S' TYPE SENSORS MUST BE CONFIGURED FOR AUTO ON/AUTO OFF CONTROL. 'V' TYPE SENSORS MUST BE CONFIGURED FOR MANUAL ON/AUTO OFF CONTROL. CEILING SENSOR TYPES: • S1: LOW-VOLTAGE DUAL TECHNOLOGY MOTION SENSOR FOR CORRIDOR APPLICATIONS. AUTO OFF CONTROL SETTING MUST DIM TO 25%-50%. • S2/V2: LOW-VOLTAGE 360° DUAL TECHNOLOGY MOTION SENSOR FOR STANDARD COVERAGE. • S3/V3: LOW-VOLTAGE 360° DUAL TECHNOLOGY MOTION SENSOR FOR EXTENDED COVERAGE. • S4/V4: LOW-VOLTAGE DUAL TECHNOLOGY MOTION SENSOR, CORNER MOUNTED COVERAGE.
	---	OVERHEAD LIGHTING FIXTURE (VARIOUS SYMBOLS). TAG INDICATES FIXTURE TYPE ACCORDING TO LIGHT FIXTURE SCHEDULE.
	---	DOWNLIGHT OR PENDANT LIGHTING FIXTURE (VARIOUS SYMBOLS). TAG INDICATES FIXTURE TYPE ACCORDING TO LIGHT FIXTURE SCHEDULE.
	AS INDICATED	WALL-MOUNTED LIGHTING FIXTURE (VARIOUS SYMBOLS). TAG INDICATES FIXTURE TYPE ACCORDING TO LIGHT FIXTURE SCHEDULE.
	AS INDICATED	DIRECTIONAL LIGHT SUCH AS FLOOD OR TRACK HEAD. TAG INDICATES FIXTURE TYPE ACCORDING TO LIGHT FIXTURE SCHEDULE.
	AS INDICATED	POLE OR AREA LIGHT (VARIOUS SYMBOLS). TAG INDICATES FIXTURE TYPE ACCORDING TO LIGHT FIXTURE SCHEDULE.
	---	EXIT LIGHT. WALL- OR CEILING- MOUNT AS SUITABLE FOR THE APPLICATION. FACES AND CHEVRONS AS INDICATED. FIXTURE TYPE ACCORDING TO LIGHT FIXTURE SCHEDULE.
	---	COMBINATION EMERGENCY LIGHTING UNIT AND EXIT SIGN. WALL- OR CEILING-MOUNT AS SUITABLE FOR THE APPLICATION. FACES AND CHEVRONS AS INDICATED. FIXTURE TYPE ACCORDING TO LIGHT FIXTURE SCHEDULE.
	---	EMERGENCY LIGHTING UNIT. WALL- OR CEILING-MOUNT AS SUITABLE FOR THE APPLICATION. FIXTURE TYPE ACCORDING TO LIGHT FIXTURE SCHEDULE.
	---	SLASHES OR HALF-SHADING INDICATES THE FIXTURE MUST BE CONNECTED AS A NIGHT LIGHT, AHEAD OF ALL SWITCHING AND OTHER CONTROL DEVICES (24-HOUR OPERATION). TYPICAL OF VARIOUS LIGHT FIXTURE SYMBOLS.
ALCR	---	AUTOMATIC LOAD CONTROL RELAY (UL924 LISTED).

HEIGHTS ARE TO THE BOTTOM OF THE DEVICE UNLESS NOTED OTHERWISE.
TOP: HEIGHT TO THE TOP OF THE DEVICE
BOTTOM: HEIGHT TO THE BOTTOM OF THE DEVICE.
HEIGHTS ARE TYPICAL AND MAY BE SUPERCEDED BY PLANS.

SYM	DESCRIPTION	DATE	APPR

NAVFAC

NORTH CAROLINA PROFESSIONAL ENGINEER JEFFERY A. RITSMAN 34954 5/6/26 SEAL

CRENSHAW CONSULTING ENGINEERS
www.crenshawconsulting.com
NC LICENSE #C-1166 3216 Blue Street, Suite 200 Raleigh, North Carolina 27609 919-871-9270 fax 871-5620

A/E INFO

APPROVED Jeffrey E. Ritsman, P.E.
FOR COMMANDER NAVFAC 5/13/2026
ACTIVITY
SATISFACTORY TO

DES	MKW	DRW	JDC	CHK	JTR
PM/DM	SGL/MDM				
BRANCH MANAGER	WRB				
CHIEF ENG/ARCH	JWJ				
FIRE PROTECTION	HPN				

DEPARTMENT OF THE NAVY
NAVAL FACILITIES ENGINEERING SYSTEMS COMMAND ~ MIDATLANTIC
MIDLANT DC CODE
MARINE CORPS BASE
NAVAL FACILITIES ENGINEERING SYSTEMS COMMAND
NAVAL STATION - NORFOLK, VA.
CAMP LEJEUNE, NC

P-1550 SOF MARINE RAIDER BATTALION / COMPANY / TEAM FACILITIES

ELECTRICAL NOTES AND LEGEND

SCALE:	AS INDICATED
EPROJECT NO.:	1701820
CONSTR. CONTR. NO.	
NAVFAC DRAWING NO.	12903842
SHEET	100 OF 122

A3
CO STG
FINAL SUBMITTAL

E-001

DRAWFORM REVISION: 25 AUGUST 2020

File Path: M:\Camp Lejeune\MARSOC SOF Marine Bn HQ_Team (P-1550)\A3 STORAGE
Print Date: 5/6/2026 2:23:32 PM

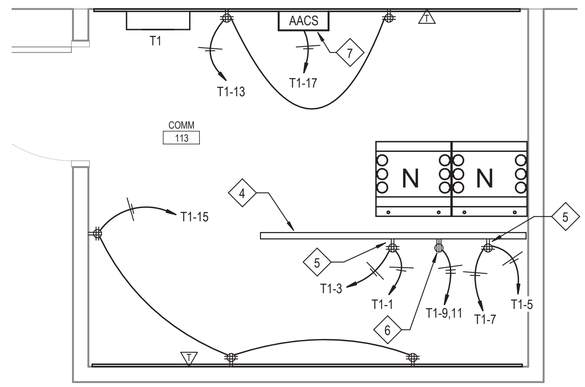

C3 ENLARGED COMM 113 POWER PLAN
1/2" = 1'-0"

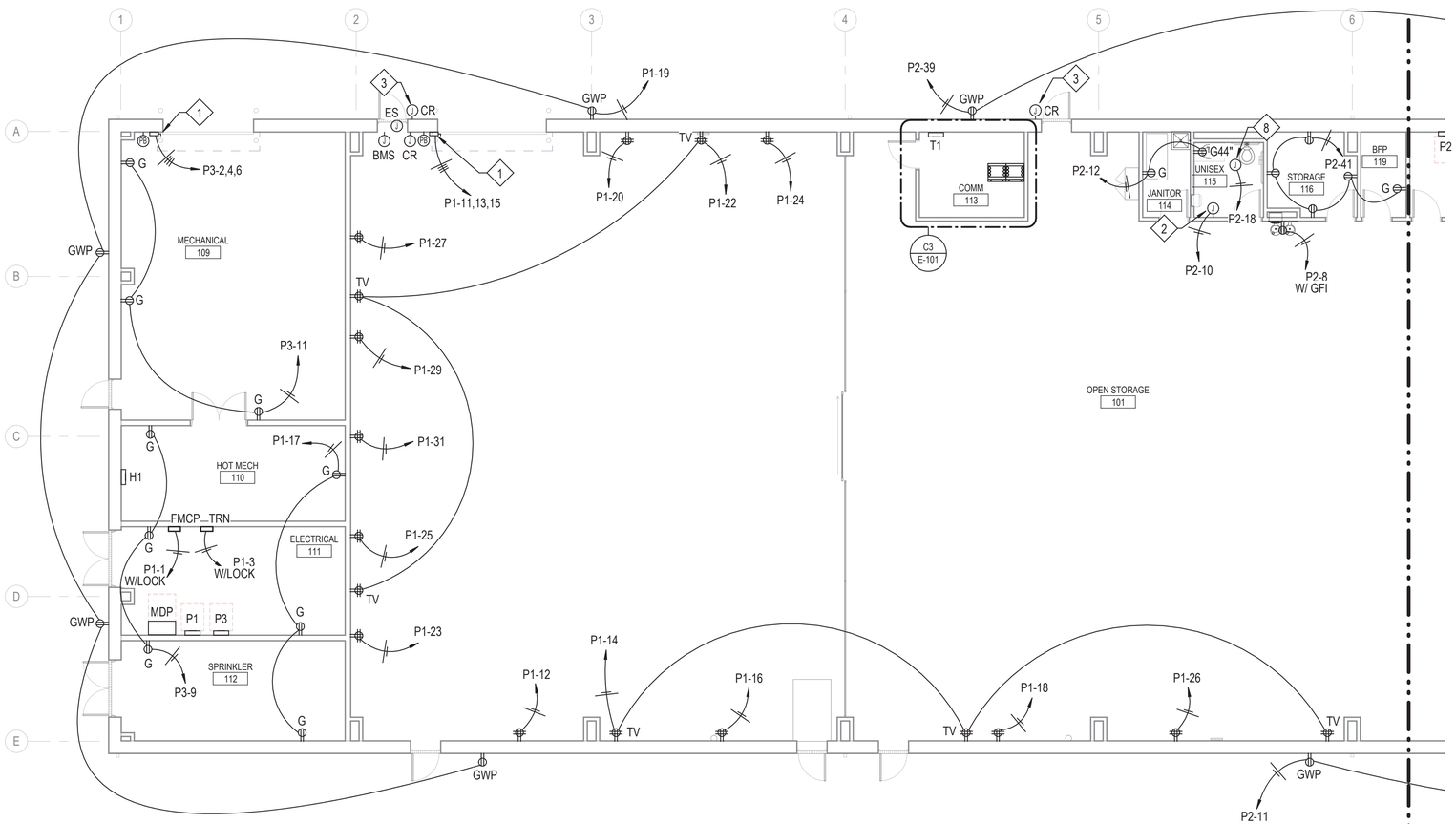

A2 FLOOR PLAN - AREA A POWER
1/8" = 1'-0"

GRAPHIC SCALE: 1/2"=1'-0"
2' 0 1' 2' 4'

GRAPHIC SCALE: 1/8"=1'-0"
8' 0 4' 8' 16'

GRAPHIC SCALE: 1"=60'
60' 0 60' 120'

N

PLAN NOTES

1. CONNECT MOTORIZED ROLL UP DOOR WITH PUSH BUTTON CONTROL. COORDINATE REQUIREMENTS WITH EQUIPMENT SUPPLIER.
2. CONNECT HAND DRYER. COORDINATE REQUIREMENTS WITH EQUIPMENT SUPPLIER.
3. JUNCTION BOX FOR CARD READER. PROVIDE 3/4" CONDUIT BACK TO SECURITY PANEL. SEE NIWC DETAILS FOR MORE INFORMATION.
4. PROVIDE UNISTRUT LOCATED 6" BEHIND AND 6" ABOVE TELECOMM RACKS. MOUNT UNISTRUT SUPPORTS ON 10' CENTERS FROM THE CEILING AND AT EACH WALL.
5. MOUNT QUAD RECEPTACLE ON UNISTRUT ABOVE COMMUNICATIONS RACK.
6. MOUNT L6-30 RECEPTACLE ON UNISTRUT RACK ABOVE COMMUNICATIONS RACK. PROVIDE 2-#10, #10 G, 3/4" C.
7. PROVIDE POWER FOR SECURITY PANEL (GFGI). COORDINATE EXACT LOCATION WITH CONTRACTING OFFICER.
8. JUNCTION BOX ABOVE CEILING FOR HARD-WIRED SENSOR CONTROLS. PROVIDE JUNCTION BOX, WIRING, AND CONDUIT COMPLETE. COORDINATE WITH PLUMBING AND EQUIPMENT SUPPLIER.

POWER NOTES

1. SEE VOLTAGE DROP SCHEDULE FOR WIRE SIZING INFORMATION FOR ALL BRANCH CIRCUITS OVER 65' IN LENGTH.
2. ALL RECEPTACLES WITHIN 6 FEET FROM THE OUTSIDE EDGE OF ANY SINK MUST BE GFI PER NEC 210.8(B)(5).
3. SEE ARCHITECTURAL SHEETS FOR INDICATIONS OF RATED WALLS.
4. PROVIDE LABEL PRINTER TYPE LABELING FOR ALL RECEPTACLES INDICATING SOURCE FEED WITH PANEL AND CIRCUIT NUMBER.
5. PROVIDE MACHINE ENGRAVED PLACARD LABELING ATTACHED WITH RIVETS TO ALL DISCONNECTS, PANELS, MOTOR-DISCONNECT SWITCHES INDICATING EQUIPMENT NAME, VOLTAGE AND PHASE, AMPERAGE, HERTZ AND SOURCE FEED.
6. ALL DISCONNECT SWITCHES MUST BE HEAVY DUTY TYPE.
7. CONTRACTOR MUST LOCATE JUNCTION BOXES, CONDUIT BODIES OR OTHER EQUIPMENT OR FITTINGS ABOVE INACCESSIBLE CEILING SUCH THAT THEY HAVE ACCESS PER NEC REQUIREMENTS.
8. COORDINATE UNDERGROUND CONDUIT FOR OUTSIDE EQUIPMENT WITH CONCRETE SLAB.
9. COORDINATE UNDERGROUND TELECOMM CONDUITS AND COMM ROOM LAYOUT WITH BASE COMMUNICATIONS OFFICE VIA CONTRACTING OFFICER.

SECURITY SYMBOL LEGEND

SYMBOL	DESCRIPTION
CR	CARD READER - PROVIDE JUNCTION BOX AND 3/4" CONDUIT WITH PULL WIRE TO CABLE TRAY ABOVE CEILING OR HOMERUN BACK TO SECURITY PANEL.
ES	ELECTRIC STRIKE - PROVIDE JUNCTION BOX AND 3/4" CONDUIT WITH PULL WIRE TO CABLE TRAY ABOVE CEILING OR HOMERUN BACK TO SECURITY PANEL.
BMS	BALANCED MAGNETIC SWITCH - PROVIDE JUNCTION BOX AND 3/4" CONDUIT WITH PULL WIRE TO CABLE TRAY ABOVE CEILING OR HOMERUN BACK TO SECURITY PANEL.

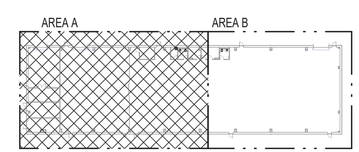

A5 KEYPLAN
1" = 60'-0"

SYM	DESCRIPTION	DATE	APPR

NAVFAC

NORTH CAROLINA PROFESSIONAL ENGINEER SEAL 34954 JEFFERY T. RITSMAN 5/13/26

SEAL

CRENSHAW CONSULTING ENGINEERS
www.crenshawconsulting.com
NC LICENSE #C-1166 1818 Bush Street, Suite 200 Raleigh, North Carolina 27608 919-871-9370 Fax 871-5620

A/E INFO

APPROVED
FOR COMMANDER NAVFAC 5/13/2026

ACTIVITY

SATISFACTORY TO

DES	MKW	DRW	JDC	CHK	JTR
PM/DM					SGL/MDM
BRANCH MANAGER					WRB
CHIEF ENG/ARCH					JWJ
FIRE PROTECTION					HPN

DEPARTMENT OF THE NAVY
NAVAL FACILITIES ENGINEERING SYSTEMS COMMAND
MIDLANT DC CORE
MARINE CORPS BASE

NAVAL FACILITIES ENGINEERING SYSTEMS COMMAND ~ MIDATLANTIC
NAVAL STATION - NORFOLK, VA.
CAMP LEJEUNE, NC

P-1550 SOF MARINE RAIDER BATTALION / COMPANY / TEAM FACILITIES

FLOOR PLAN - AREA A POWER

SCALE: AS INDICATED
EPROJECT NO.: 1701820
CONSTR. CONTR. NO.

NAVFAC DRAWING NO. 12903843
SHEET 101 OF 122

A3
CO STG

E-101

FINAL SUBMITTAL

DRAWFORM REVISION: 25 AUGUST 2020

File Path: M:\Camp Lejeune\MARSOC SOF Marine Bn HQ_Team (P-1550)\A3 STORAGE
Print Date: 5/6/2026 2:23:34 PM

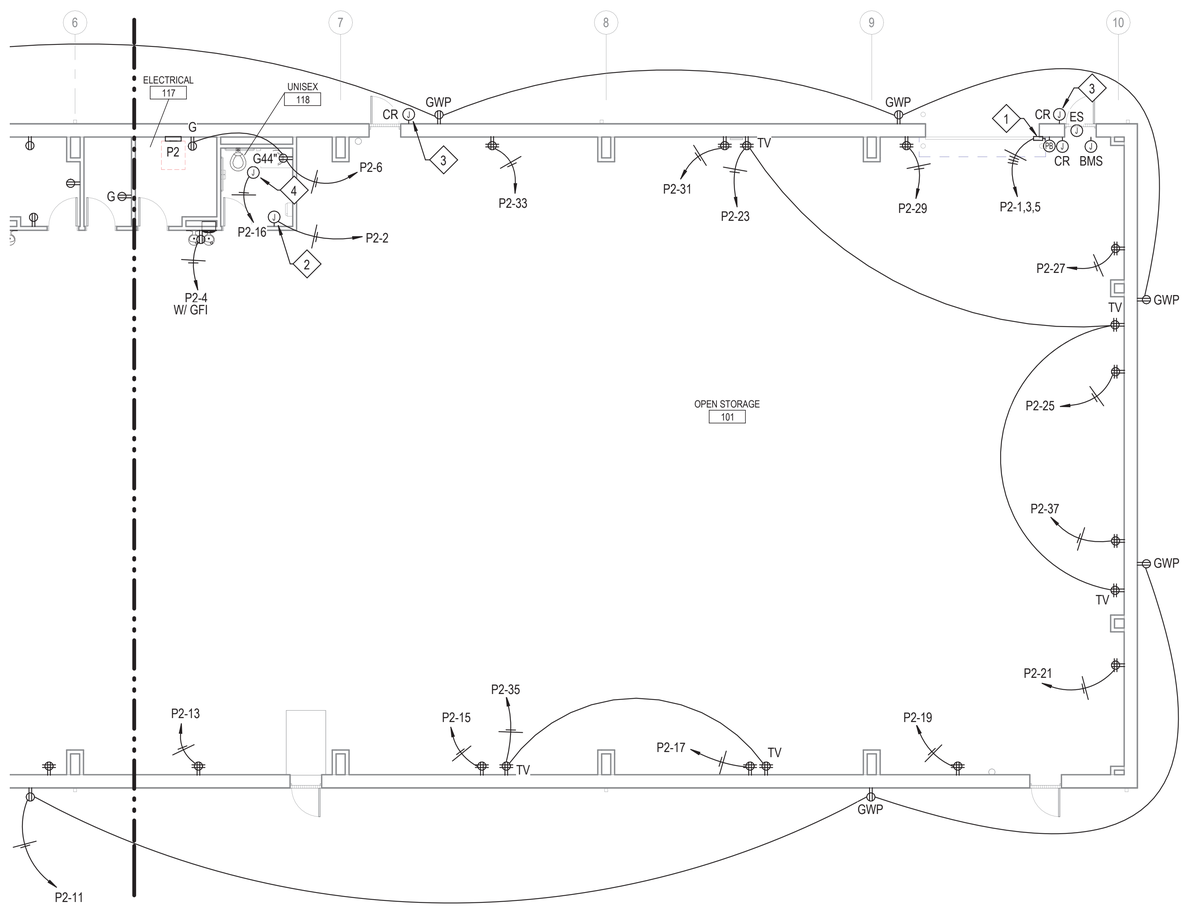

A3 FLOOR PLAN - AREA B POWER

1/8" = 1'-0"

GRAPHIC SCALE: 1/8"=1'-0"

8' 0 4' 8' 16'

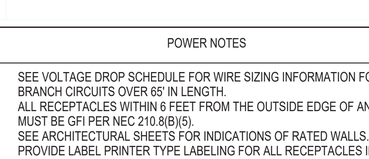

A5 KEYPLAN

1" = 60'-0"

GRAPHIC SCALE: 1"=60'

60' 0 60' 120'

N

PLAN NOTES

1. CONNECT MOTORIZED ROLL UP DOOR WITH PUSH BUTTON CONTROL. COORDINATE REQUIREMENTS WITH EQUIPMENT SUPPLIER.
2. CONNECT HAND DRYER. COORDINATE REQUIREMENTS WITH EQUIPMENT SUPPLIER.
3. JUNCTION BOX FOR CARD READER. PROVIDE 3/4" CONDUIT BACK TO SECURITY PANEL. SEE NIWC DETAILS FOR MORE INFORMATION.
4. JUNCTION BOX ABOVE CEILING FOR HARD-WIRED SENSOR CONTROLS. PROVIDE JUNCTION BOX, WIRING, AND CONDUIT COMPLETE. COORDINATE WITH PLUMBING AND EQUIPMENT SUPPLIER.

POWER NOTES

1. SEE VOLTAGE DROP SCHEDULE FOR WIRE SIZING INFORMATION FOR ALL BRANCH CIRCUITS OVER 65' IN LENGTH.
2. ALL RECEPTACLES WITHIN 6 FEET FROM THE OUTSIDE EDGE OF ANY SINK MUST BE GFI PER NEC 210.8(B)(5).
3. SEE ARCHITECTURAL SHEETS FOR INDICATIONS OF RATED WALLS.
4. PROVIDE LABEL PRINTER TYPE LABELING FOR ALL RECEPTACLES INDICATING SOURCE FEED WITH PANEL AND CIRCUIT NUMBER.
5. PROVIDE MACHINE ENGRAVED PLACARD LABELING ATTACHED WITH RIVETS TO ALL DISCONNECTS, PANELS, MOTOR-DISCONNECT SWITCHES INDICATING EQUIPMENT NAME, VOLTAGE AND PHASE, AMPERAGE, HERTZ AND SOURCE FEED.
6. ALL DISCONNECT SWITCHES MUST BE HEAVY DUTY TYPE.
7. CONTRACTOR MUST LOCATE JUNCTION BOXES, CONDUIT BODIES OR OTHER EQUIPMENT OR FITTINGS ABOVE INACCESSIBLE CEILING SUCH THAT THEY HAVE ACCESS PER NEC REQUIREMENTS.
8. COORDINATE UNDERGROUND CONDUIT FOR OUTSIDE EQUIPMENT WITH CONCRETE SLAB.
9. COORDINATE UNDERGROUND TELECOMM CONDUITS AND COMM ROOM LAYOUT WITH BASE COMMUNICATIONS OFFICE VIA CONTRACTING OFFICER.

SECURITY SYMBOL LEGEND

SYMBOL	DESCRIPTION
CR (2)	CARD READER - PROVIDE JUNCTION BOX AND 3/4" CONDUIT WITH PULL WIRE TO CABLE TRAY ABOVE CEILING OR HOMERUN BACK TO SECURITY PANEL.
ES (1)	ELECTRIC STRIKE - PROVIDE JUNCTION BOX AND 3/4" CONDUIT WITH PULL WIRE TO CABLE TRAY ABOVE CEILING OR HOMERUN BACK TO SECURITY PANEL.
BMS (1)	BALANCED MAGNETIC SWITCH - PROVIDE JUNCTION BOX AND 3/4" CONDUIT WITH PULL WIRE TO CABLE TRAY ABOVE CEILING OR HOMERUN BACK TO SECURITY PANEL.

SYM	DESCRIPTION	DATE	APPR

NAVFAC

NORTH CAROLINA PROFESSIONAL ENGINEER JEFFERY T. RITSMAN 34954 5/13/26

SEAL

CRENSHAW CONSULTING engineers
www.crenshawconsulting.com
NC LICENSE #C-1166 1818 Bush Street, Suite 200 Raleigh, North Carolina 27608 919-871-9270 Fax 871-5620

A/E INFO

APPROVED
Jeffrey T. Ritsman, P.E.
FOR COMMANDER NAVFAC 5/13/2026

ACTIVITY

SATISFACTORY TO

DES	MKW	DRW	JDC
CHK	JTR		
PM/DM	SGL/MDM		
BRANCH MANAGER	WRB		
CHIEF ENG/ARCH	JWJ		
FIRE PROTECTION	HPN		

DEPARTMENT OF THE NAVY
NAVAL FACILITIES ENGINEERING SYSTEMS COMMAND
MIDLANT DC CORE
MARINE CORPS BASE

NAVAL FACILITIES ENGINEERING SYSTEMS COMMAND ~ MIDATLANTIC
NAVAL STATION - NORFOLK, VA.
CAMP LEJEUNE, NC

P-1550 SOF MARINE RAIDER
BATTALION / COMPANY / TEAM FACILITIES

FLOOR PLAN - AREA B POWER

SCALE: AS INDICATED
EPROJECT NO.: 1701820
CONSTR. CONTR. NO.
NAVFAC DRAWING NO. 12903844
SHEET 102 OF 122

A3
CO STG

E-102

FINAL SUBMITTAL

DRAWFORM REVISION: 25 AUGUST 2020

File Path: M:\Camp Lejeune\MARSOC SOF Marine Bn HQ_Team (P-1550)\A3 STORAGE
Print Date: 5/6/2026 2:23:35 PM

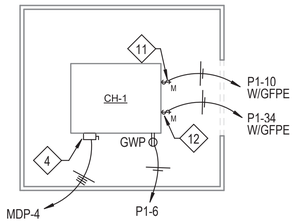

D2 CHILLER YARD PLAN - AREA A EQUIPMENT CONNECTIONS
1/8" = 1'-0"

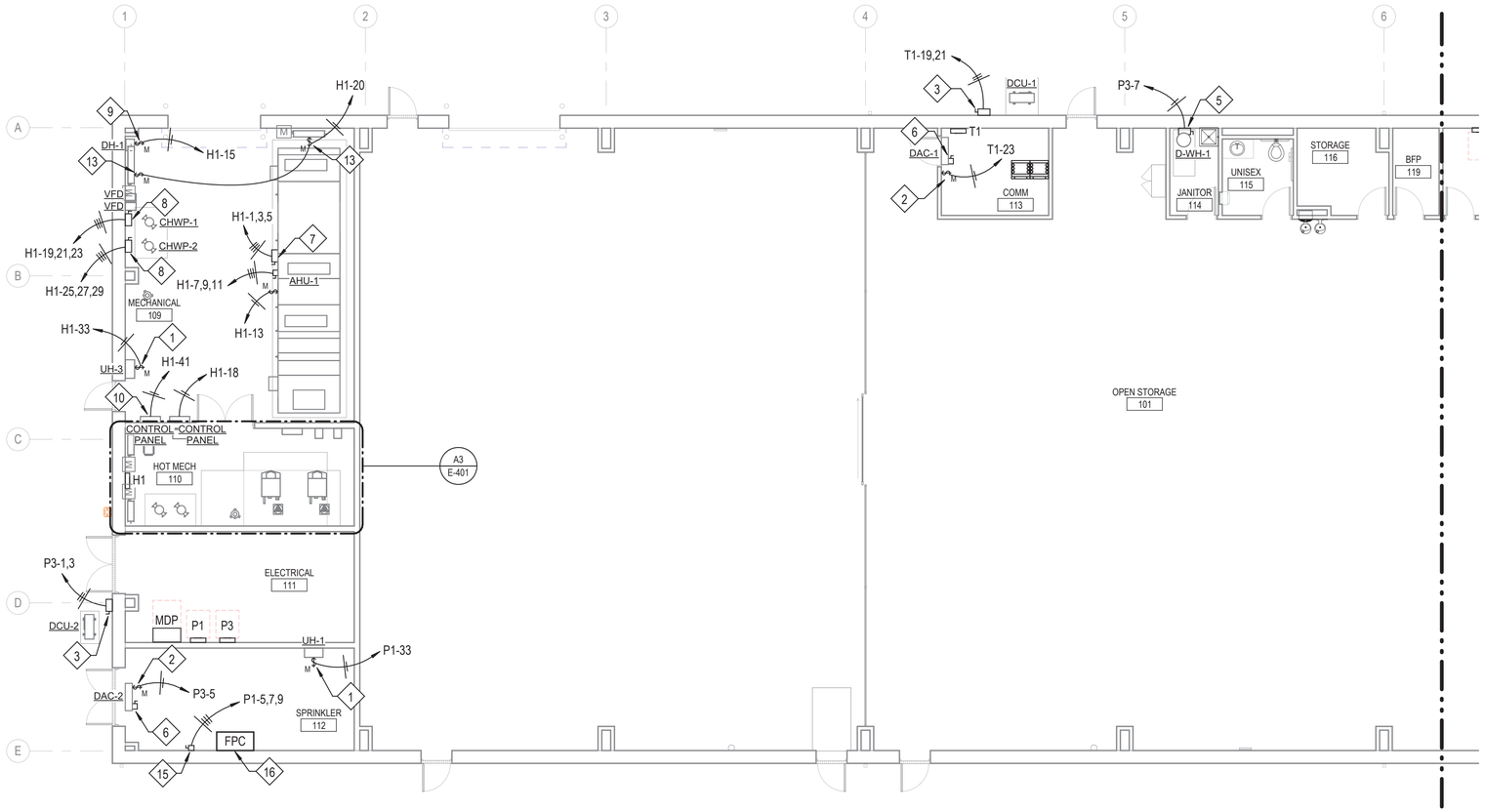

A2 FLOOR PLAN - AREA A EQUIPMENT CONNECTIONS
1/8" = 1'-0"

GRAPHIC SCALE: 1/8"=1'-0"
8' 0 4' 8' 16'

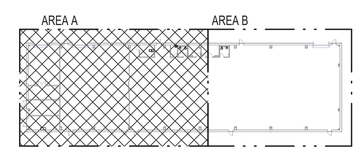

A5 KEYPLAN
1" = 60'-0"

GRAPHIC SCALE: 1"=60'
60' 0 60' 120'

PLAN NOTES

1. CONNECT UNIT HEATER. PROVIDE DISCONNECT, CONDUCTORS AND CONDUITS COMPLETE. COORDINATE WITH MECHANICAL.
2. CONNECT CONDENSATE PUMP. PROVIDE MOTOR SWITCH, CONDUCTORS AND CONDUITS COMPLETE. COORDINATE WITH MECHANICAL.
3. CONNECT CONDENSING UNIT. PROVIDE DISCONNECT, CONDUCTORS AND CONDUITS COMPLETE. RUN UNDERGROUND FROM EQUIPMENT TO BUILDING. COORDINATE WITH MECHANICAL.
4. CONNECT CHILLER. PROVIDE DISCONNECT, CONDUCTORS AND CONDUITS COMPLETE. COORDINATE WITH MECHANICAL.
5. CONNECT ELECTRIC WATER HEATER. PROVIDE DISCONNECT, CONDUCTORS AND CONDUITS COMPLETE. COORDINATE WITH PLUMBING.
6. CONNECT DUCTLESS SPLIT AIR HANDLING UNIT. INDOOR UNIT IS POWERED BY OUTDOOR UNIT. PROVIDE DISCONNECT, WIRING, AND CONDUIT COMPLETE. COORDINATE WITH MECHANICAL.
7. CONNECT AHU SUPPLY FAN AND EXHAUST FAN. CONNECT AHU MARINE LIGHTS. PROVIDE DISCONNECTS, WIRING, AND CONDUIT COMPLETE. COORDINATE WITH MECHANICAL.
8. CONNECT CHILLED WATER PUMP THROUGH VFD. PROVIDE DISCONNECT, CONDUCTORS AND CONDUITS COMPLETE. COORDINATE WITH MECHANICAL.
9. CONNECT DEHUMIDIFIER. PROVIDE DISCONNECT, CONDUCTORS AND CONDUITS COMPLETE. COORDINATE WITH MECHANICAL.
10. CONNECT HVAC CONTROL PANEL. PROVIDE HARD WIRE CONNECTION, CONDUCTORS AND CONDUITS COMPLETE. COORDINATE WITH MECHANICAL.
11. CONNECT CHILLER HEAT TRACE. PROVIDE DISCONNECT, CONDUCTORS AND CONDUITS COMPLETE. CONNECT TO GFPE BREAKER. COORDINATE WITH MECHANICAL.
12. CONNECT CHILLER PIPING HEAT TRACE. PROVIDE DISCONNECT, CONDUCTORS AND CONDUITS COMPLETE. CONNECT TO GFPE BREAKER. COORDINATE WITH MECHANICAL.
13. CONNECT MOTORIZED LOUVER. PROVIDE DISCONNECT, CONDUCTORS AND CONDUITS COMPLETE. COORDINATE WITH MECHANICAL.
14. LOCATION OF CHILLER YARD. SEE DETAIL ABOVE FOR CHILLER YARD PLAN.
15. CONNECT JOCKEY PUMP. PROVIDE DISCONNECT, WIRING, AND CONDUIT COMPLETE. COORDINATE WITH FIRE PROTECTION.
16. CONNECT FIRE PUMP CONTROLLER. SEE ELECTRICAL RISER DIAGRAM. COORDINATE WITH FIRE PROTECTION.

POWER NOTES

1. SEE VOLTAGE DROP SCHEDULE FOR WIRE SIZING INFORMATION FOR ALL BRANCH CIRCUITS OVER 65' IN LENGTH.
2. ALL RECEPTACLES WITHIN 6 FEET FROM THE OUTSIDE EDGE OF ANY SINK MUST BE GFI PER NEC 210.8(B)(5).
3. SEE ARCHITECTURAL SHEETS FOR INDICATIONS OF RATED WALLS.
4. PROVIDE LABEL PRINTER TYPE LABELING FOR ALL RECEPTACLES INDICATING SOURCE FEED WITH PANEL AND CIRCUIT NUMBER.
5. PROVIDE MACHINE ENGRAVED PLACARD LABELING ATTACHED WITH RIVETS TO ALL DISCONNECTS, PANELS, MOTOR-DISCONNECT SWITCHES INDICATING EQUIPMENT NAME, VOLTAGE AND PHASE, AMPERAGE, HERTZ AND SOURCE FEED.
6. ALL DISCONNECT SWITCHES MUST BE HEAVY DUTY TYPE.
7. CONTRACTOR MUST LOCATE JUNCTION BOXES, CONDUIT BODIES OR OTHER EQUIPMENT OR FITTINGS ABOVE INACCESSIBLE CEILING SUCH THAT THEY HAVE ACCESS PER NEC REQUIREMENTS.
8. COORDINATE UNDERGROUND CONDUIT FOR OUTSIDE EQUIPMENT WITH CONCRETE SLAB.
9. COORDINATE UNDERGROUND TELECOMM CONDUITS AND COMM ROOM LAYOUT WITH BASE COMMUNICATIONS OFFICE VIA CONTRACTING OFFICER.

SYM	DESCRIPTION	DATE	APPR.

NAVFAC

NORTH CAROLINA PROFESSIONAL ENGINEER SEAL 34954 JEFFERY T. RITSMAN 5/13/26

CRENSHAW CONSULTING Engineers
NC LICENSE #C-1166 www.crenshawconsulting.com 3210 Blue Street, Suite 200 Raleigh, North Carolina 27609 919-871-9370 Fax 871-5620

A/E INFO

APPROVED
FOR COMMANDER NAVFAC 5/13/2026
ACTIVITY

SATISFACTORY TO

DES	MKW	DRW JDC	CHK JTR
PM/DM			SGL/MDM
BRANCH MANAGER			WRB
CHIEF ENG/ARCH			JWJ
FIRE PROTECTION			HPN

DEPARTMENT OF THE NAVY
NAVAL FACILITIES ENGINEERING SYSTEMS COMMAND
MIDLANT DC CORE
MARINE CORPS BASE
NAVAL FACILITIES ENGINEERING SYSTEMS COMMAND ~ MIDATLANTIC
NAVAL STATION - NORFOLK, VA
CAMP LEJEUNE, NC

P-1550 SOF MARINE RAIDER BATTALION / COMPANY / TEAM FACILITIES

FLOOR PLAN - AREA A EQUIPMENT CONNECTIONS

SCALE: AS INDICATED
EPROJECT NO.: 1701820
CONSTR. CONTR. NO.

NAVFAC DRAWING NO. 12903845
SHEET 103 OF 122

A3
CO STG
E-103

FINAL SUBMITTAL
DRAWFORM REVISION: 25 AUGUST 2020

File Path: M:\Camp Lejeune\MARSOC SOF Marine Bn HQ_Team (P-1550)\A3 STORAGE
Print Date: 5/6/2026 2:23:37 PM

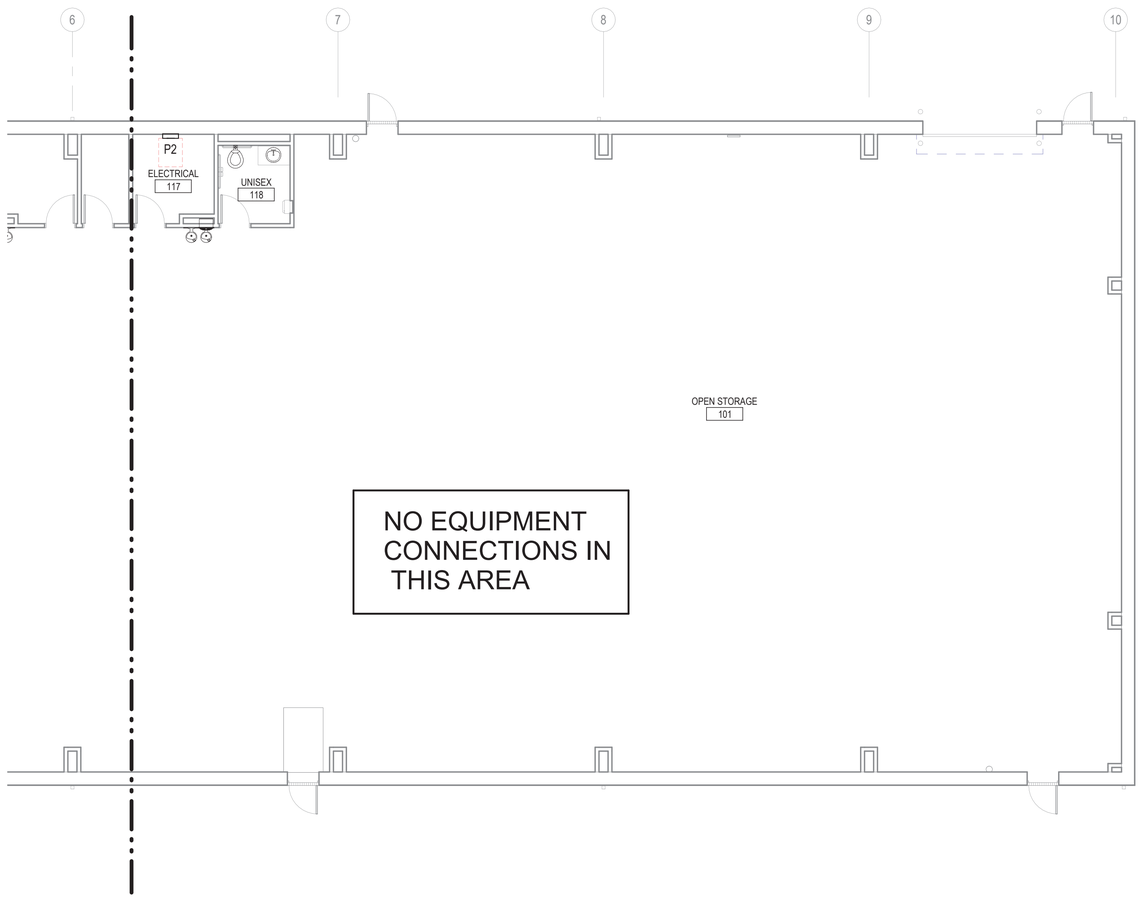

A3 FLOOR PLAN - AREA B EQUIPMENT CONNECTIONS
1/8" = 1'-0"

GRAPHIC SCALE: 1/8"=1'-0"
8' 0 4' 8' 16'

GRAPHIC SCALE: 1"=60'
60' 0 60' 120'

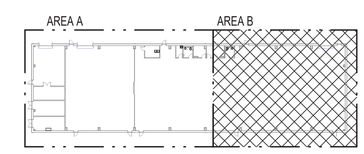

A5 KEYPLAN
1" = 60'-0"

PLAN NOTES

POWER NOTES

1. SEE VOLTAGE DROP SCHEDULE FOR WIRE SIZING INFORMATION FOR ALL BRANCH CIRCUITS OVER 65' IN LENGTH.
2. ALL RECEPTACLES WITHIN 6 FEET FROM THE OUTSIDE EDGE OF ANY SINK MUST BE GFI PER NEC 210.8(B)(5).
3. SEE ARCHITECTURAL SHEETS FOR INDICATIONS OF RATED WALLS.
4. PROVIDE LABEL PRINTER TYPE LABELING FOR ALL RECEPTACLES INDICATING SOURCE FEED WITH PANEL AND CIRCUIT NUMBER.
5. PROVIDE MACHINE ENGRAVED PLACARD LABELING ATTACHED WITH RIVETS TO ALL DISCONNECTS, PANELS, MOTOR-DISCONNECT SWITCHES INDICATING EQUIPMENT NAME, VOLTAGE AND PHASE, AMPERAGE, HERTZ AND SOURCE FEED.
6. ALL DISCONNECT SWITCHES MUST BE HEAVY DUTY TYPE.
7. CONTRACTOR MUST LOCATE JUNCTION BOXES, CONDUIT BODIES OR OTHER EQUIPMENT OR FITTINGS ABOVE INACCESSIBLE CEILING SUCH THAT THEY HAVE ACCESS PER NEC REQUIREMENTS.
8. COORDINATE UNDERGROUND CONDUIT FOR OUTSIDE EQUIPMENT WITH CONCRETE SLAB.
9. COORDINATE UNDERGROUND TELECOMM CONDUITS AND COMM ROOM LAYOUT WITH BASE COMMUNICATIONS OFFICE VIA CONTRACTING OFFICER.

SYM	DESCRIPTION	DATE	APPR

NAVFAC

NORTH CAROLINA PROFESSIONAL ENGINEER SEAL 34954 JEFFERY T. RITSMAN 5/13/26

SEAL

CRENSHAW CONSULTING Engineers
NC LICENSE #C-1166
www.crenshawconsulting.com
1810 Stuart Street, Suite 200
Raleigh, North Carolina 27608
919-871-1670 Fax 871-5620

A/E INFO

APPROVED
DocuSigned by:
FOR COMMANDER NAVFAC 5/13/2026

ACTIVITY

SATISFACTORY TO

DES	MKW	DRW	JDC	CHK	JTR

PM/DM	SGL/MDM
BRANCH MANAGER	WRB
CHIEF ENG/ARCH	JWJ
FIRE PROTECTION	HPN

DEPARTMENT OF THE NAVY
NAVAL FACILITIES ENGINEERING SYSTEMS COMMAND
MIDLANT DC CORE
MARINE CORPS BASE

NAVAL FACILITIES ENGINEERING SYSTEMS COMMAND ~ MIDATLANTIC
NAVAL STATION - NORFOLK, VA.
CAMP LEJEUNE, NC

P-1550 SOF MARINE RAIDER
BATTALION / COMPANY / TEAM FACILITIES

FLOOR PLAN - AREA B EQUIPMENT CONNECTIONS

SCALE:	AS INDICATED
EPROJECT NO.:	1701820
CONSTR. CONTR. NO.	
NAVFAC DRAWING NO.	12903846
SHEET	104 OF 122

A3
CO STG

E-104

FINAL SUBMITTAL

DRAWFORM REVISION: 25 AUGUST 2020

File Path: M:\Camp Lejeune\MARSOC SOF Marine Bn HQ_Team (P-1550)\A3 STORAGE
Print Date: 5/6/2026 2:23:38 PM

PLAN NOTES

1. LOW VOLTAGE CEILING MOUNTED MOTION SENSOR. CONNECT TO ALL LIGHTS IN THIS AREA AS REQUIRED. SEE MOTION SENSOR DETAIL. TYPICAL.
2. CONNECT ALL EMERGENCY LIGHTS AND EXIT SIGNS SHOWN IN THIS AREA TO CIRCUIT #P1-2 ON LOCKED BREAKER.
3. CONNECT BATTERY IN LIGHT FIXTURE AHEAD OF CONTACTOR SO THAT EMERGENCY BALLAST COMES ON ONLY IN THE EVENT OF POWER LOSS. FIXTURE IS NORMALLY CONTROLLED BY EXTERIOR LIGHTING CONTACTOR.
4. CONNECT ALCR AHEAD OF LIGHTING CONTROLS TO LIGHT FIXTURES IN THIS AREA. COORDINATE WITH FIRE ALARM FOR CONNECTION TO FA SYSTEM. ACTIVATION OF FA SYSTEM MUST OVERRIDE LIGHTING CONTROLS FOR EGRESS ILLUMINATION. ALCR MUST BE UL924 LISTED.

LIGHTING NOTES

1. SEE VOLTAGE DROP SCHEDULE FOR WIRE SIZING INFORMATION FOR ALL BRANCH CIRCUITS OVER 65' IN LENGTH.
2. SEE ARCHITECTURAL SHEETS FOR INDICATIONS OF RATED WALLS.
3. PROVIDE LABEL PRINTER TYPE LABELING FOR ALL SWITCHES INDICATING SOURCE FEED WITH PANEL AND CIRCUIT NUMBER.
4. SEE SHEET E-504 FOR LIGHTING FIXTURE DETAILS. SEE SHEET E-601 FOR LIGHT FIXTURE SCHEDULE.

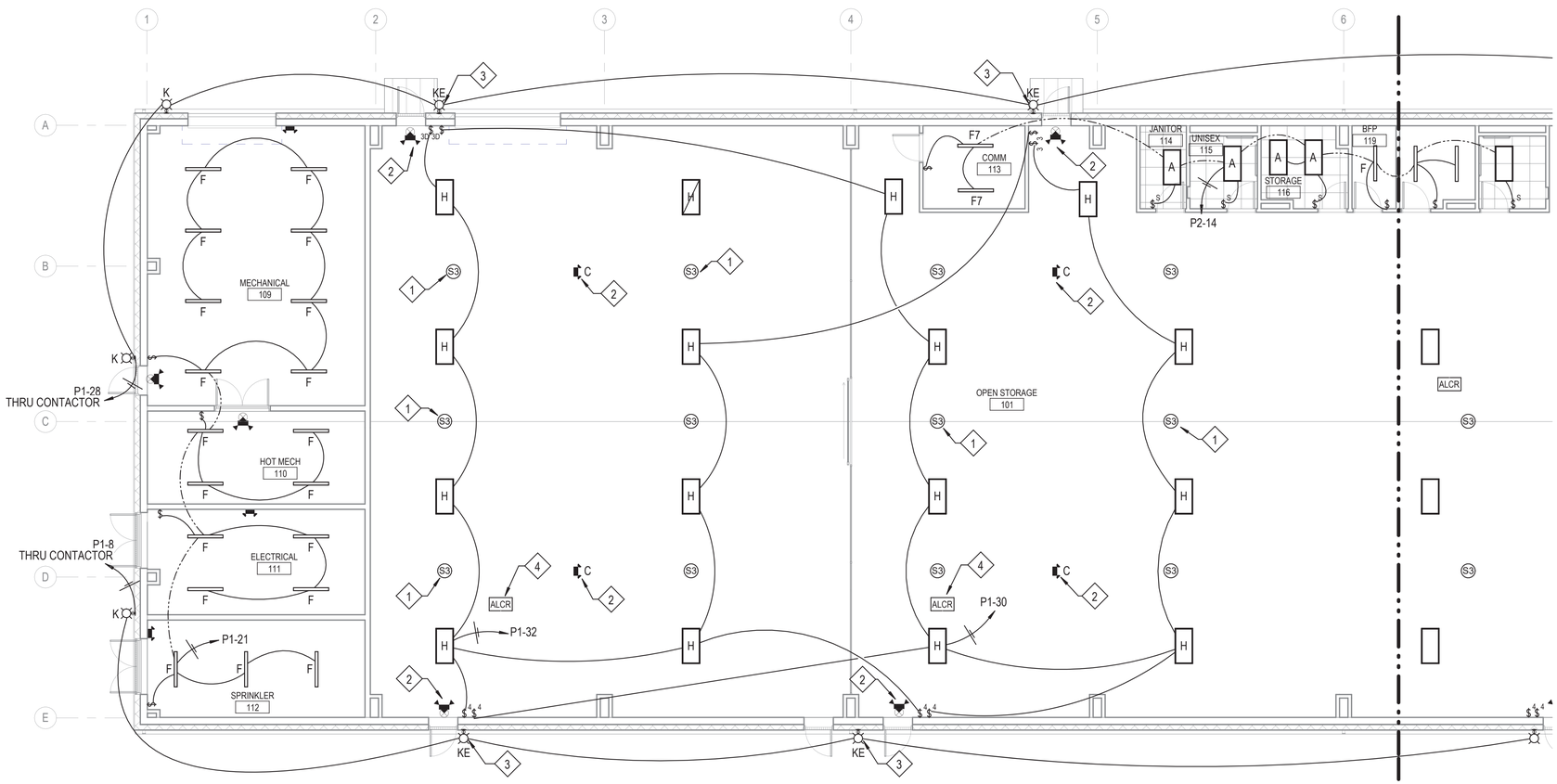

A3 FLOOR PLAN - AREA A LIGHTING
1/8" = 1'-0"

GRAPHIC SCALE: 1/8"=1'-0"
8' 0 4' 8' 16'

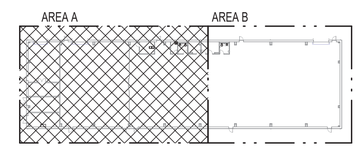

A5 KEYPLAN
1" = 60'-0"

GRAPHIC SCALE: 1"=60'
60' 0 60' 120'

N

SYM	DESCRIPTION	DATE	APPR

NAVFAC

NORTH CAROLINA PROFESSIONAL ENGINEER SEAL 34954 JEFFERY T. RITSMAN 5/13/26

CRENSHAW CONSULTING Engineers
NC LICENSE #C-1166
www.crenshawconsulting.com
3210 Blue Street, Suite 200
Raleigh, North Carolina 27609
919-871-1070 Fax 871-5620

A/E INFO

APPROVED
John E. Detwiler, R.A.
FOR COMMANDER NAVFAC 5/13/2026
ACTIVITY

SATISFACTORY TO

DES	MKW	DRW	JDC	CHK	JTR
PM/DM	SGL/MDM				
BRANCH MANAGER	WRB				
CHIEF ENG/ARCH	JWJ				
FIRE PROTECTION	HPN				

DEPARTMENT OF THE NAVY
NAVAL FACILITIES ENGINEERING SYSTEMS COMMAND
MIDLANT DC CORE
MARINE CORPS BASE
NAVAL FACILITIES ENGINEERING SYSTEMS COMMAND ~ MIDATLANTIC
NAVAL STATION - NORFOLK, VA.
CAMP LEJEUNE, NC

P-1550 SOF MARINE RAIDER
BATTALION / COMPANY / TEAM FACILITIES

FLOOR PLAN - AREA A LIGHTING

SCALE: AS INDICATED
EPROJECT NO.: 1701820
CONSTR. CONTR. NO.

NAVFAC DRAWING NO.
12903847
SHEET 105 OF 122

A3
CO STG
E-105

FINAL SUBMITTAL
DRAWFORM REVISION: 25 AUGUST 2020

File Path: M:\Camp Lejeune\MARSOC SOF Marine Bn HQ_Team (P-1550)\A3 STORAGE
Print Date: 5/6/2026 2:23:40 PM

PLAN NOTES

1. LOW VOLTAGE CEILING MOUNTED MOTION SENSOR. CONNECT TO ALL LIGHTS IN THIS AREA AS REQUIRED. SEE MOTION SENSOR DETAIL. TYPICAL.
2. CONNECT ALL EMERGENCY LIGHTS AND EXIT SIGNS SHOWN IN THIS AREA TO CIRCUIT #P1-4 ON LOCKED BREAKER.
3. CONNECT BATTERY IN LIGHT FIXTURE AHEAD OF CONTACTOR SO THAT EMERGENCY BALLAST COMES ON ONLY IN THE EVENT OF POWER LOSS. FIXTURE IS NORMALLY CONTROLLED BY EXTERIOR LIGHTING CONTACTOR.
4. CONNECT ALCR AHEAD OF LIGHTING CONTROLS TO LIGHT FIXTURES IN THIS AREA. COORDINATE WITH FIRE ALARM FOR CONNECTION TO FA SYSTEM. ACTIVATION OF FA SYSTEM MUST OVERRIDE LIGHTING CONTROLS FOR EGRESS ILLUMINATION. ALCR MUST BE UL924 LISTED.

LIGHTING NOTES

1. SEE VOLTAGE DROP SCHEDULE FOR WIRE SIZING INFORMATION FOR ALL BRANCH CIRCUITS OVER 65' IN LENGTH.
2. SEE ARCHITECTURAL SHEETS FOR INDICATIONS OF RATED WALLS.
3. PROVIDE LABEL PRINTER TYPE LABELING FOR ALL SWITCHES INDICATING SOURCE FEED WITH PANEL AND CIRCUIT NUMBER.
4. SEE SHEET E-504 FOR LIGHTING FIXTURE DETAILS. SEE SHEET E-601 FOR LIGHT FIXTURE SCHEDULE.

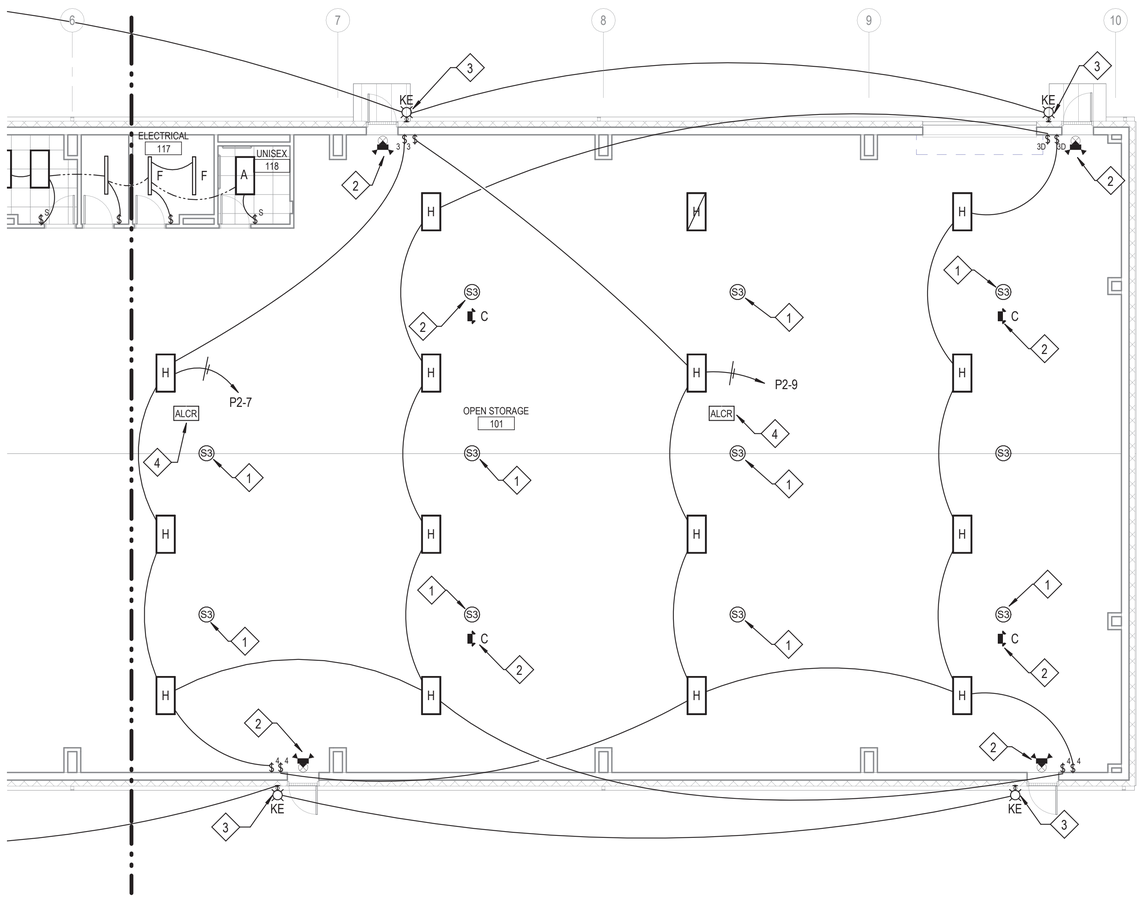

A3 FLOOR PLAN - AREA B LIGHTING
1/8" = 1'-0"

GRAPHIC SCALE: 1/8"=1'-0"
8' 0 4' 8' 16'

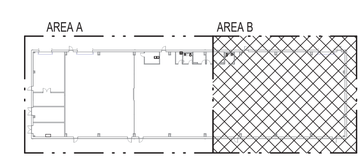

A5 KEYPLAN
1" = 60'-0"

GRAPHIC SCALE: 1"=60'
60' 0 60' 120'

N

SYM	DESCRIPTION	DATE	APPR

NAVFAC

NORTH CAROLINA PROFESSIONAL ENGINEER SEAL 34954 JEFFERY T. RITSMAN 5/6/26

CRENSHAW CONSULTING Engineers
www.crenshawconsulting.com
NC LICENSE #C-1556
3516 Bush Street, Suite 200
Raleigh, North Carolina 27609
919-871-9370 Fax 871-5620

A/E INFO

APPROVED
FOR COMMANDER NAVFAC 5/13/2026
ACTIVITY

SATISFACTORY TO

DES MKW	DRW JDC	CHK JTR	
PM/DM	SGL/MDM		
BRANCH MANAGER	WRB		
CHIEF ENG/ARCH	JWJ		
FIRE PROTECTION	HPN		

DEPARTMENT OF THE NAVY
NAVAL FACILITIES ENGINEERING SYSTEMS COMMAND
MIDLANT DC CORE
MARINE CORPS BASE

NAVAL FACILITIES ENGINEERING SYSTEMS COMMAND ~ MIDATLANTIC
NAVAL STATION - NORFOLK, VA
CAMP LEJEUNE, NC

P-1550 SOF MARINE RAIDER BATTALION / COMPANY / TEAM FACILITIES

FLOOR PLAN - AREA B LIGHTING

SCALE: AS INDICATED
EPROJECT NO.: 1701820
CONSTR. CONTR. NO.

NAVFAC DRAWING NO. 12903848
SHEET 106 OF 122

A3
CO STG

E-106

FINAL SUBMITTAL

DRAWFORM REVISION: 25 AUGUST 2020

File Path: M:\Camp Lejeune\MARSOC SOF Marine Bn HQ_Team (P-1550)\A3 STORAGE
Print Date: 5/6/2026 2:23:41 PM

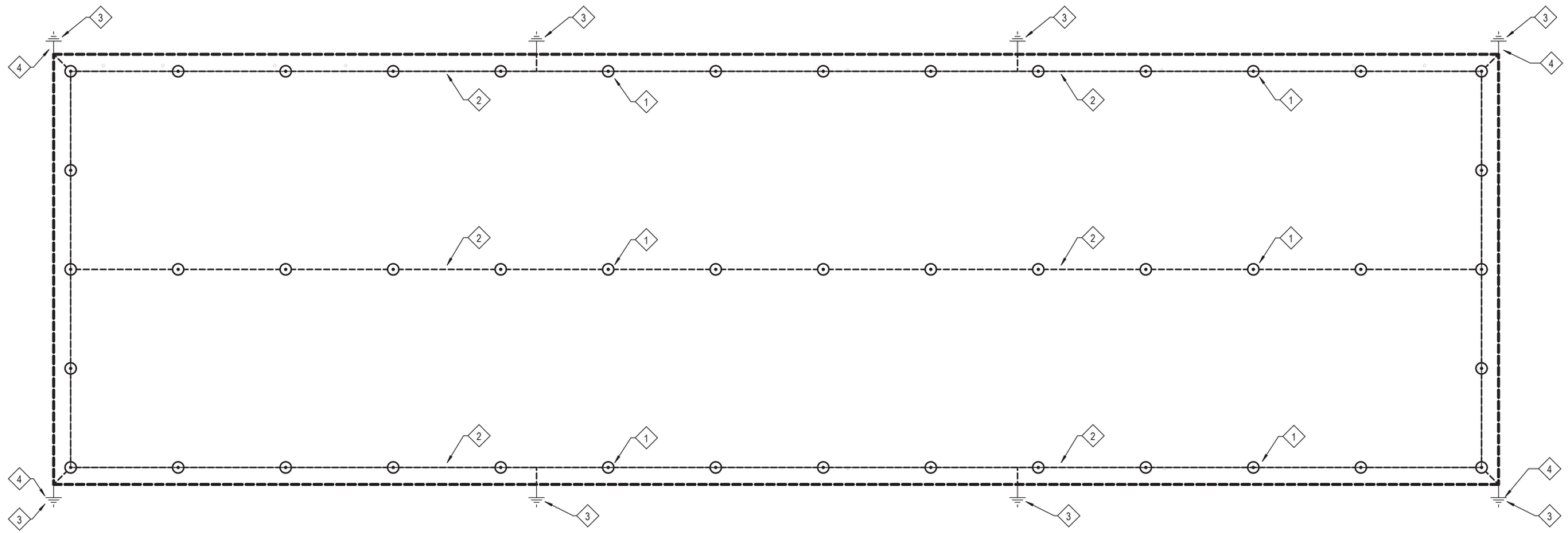

C2 ROOF PLAN - LIGHTNING PROTECTION
3/32" = 1'-0"

GRAPHIC SCALE: 3/32"=1'-0"
8' 0 8' 16' 24'
N

COMPATIBLE MATERIALS NOTE:

THE MATERIALS SECTION OF U.L. 96A (SECTION 5) REQUIRES THAT METALS MUST BE USED IN COMBINATIONS THAT ARE GALVANICALLY COMPATIBLE. THEREFORE, ALUMINUM COMPONENTS MUST NOT BE INSTALLED IN DIRECT CONTACT WITH BARE COPPER ROOFING MATERIALS/SURFACES, AND COPPER COMPONENTS MUST NOT BE INSTALLED IN DIRECT CONTACT WITH BARE ALUMINUM ROOFING MATERIALS/SURFACES. METALS ACCEPTABLE FOR USE WITH COPPER AND ALUMINUM ARE AS FOLLOWS:

METALS ACCEPTABLE FOR USE WITH COPPER:
NICKEL, BRASS, TIN, LEAD, STAINLESS STEEL, AND MONEL.

METALS ACCEPTABLE FOR USE WITH ALUMINUM:
MAGNESIUM, ZINC, GALVANIZED STEEL, STAINLESS STEEL, LEAD, AND WROUGHT IRON.

PAINT IS NOT CONSIDERED ACCEPTABLE BETWEEN GALVANICALLY INCOMPATIBLE ROOFING, FLASHING, AND OTHER MATERIALS OR SURFACES.

GENERAL NOTES:

1. SEE SHEET E-001 FOR ELECTRICAL GENERAL NOTES AND LEGEND.
2. JOB CONDITIONS MAY NECESSITATE SLIGHT VARIATION IN LOCATION OF DOWN LEADS AND AIR TERMINALS.
3. INSTALLATION MUST BE IN ACCORDANCE WITH U.L. REQUIREMENTS AND RECEIVE THE U.L. LIGHTNING PROTECTION INSPECTION CERTIFICATE.
4. BOND ALL BODIES OF CONDUCTANCE AND BODIES OF INDUCTANCE LOCATED WITHIN 6 FEET OF MAIN CONDUCTOR AS REQUIRED.
5. CONDUCTOR MUST BE FASTENED A MAXIMUM OF 3 FEET ON CENTER.
6. ALL CONDUCTOR BENDS MUST BE A MINIMUM OF 90 DEGREES WITH A MINIMUM 8 INCH RADIUS.
7. INSTALLATION TO BE PERFORMED IN A NEAT AND ORDERLY MANNER, AND MUST BE DONE AS INCONSPICUOUSLY AS POSSIBLE.
8. VERIFY ELECTRICAL GROUND, WATER LINE, AND OTHER UNDERGROUND PIPING IS COMMON WITH THE LIGHTNING PROTECTION GROUNDING.
9. A SURGE PROTECTIVE DEVICE OR UNIT MUST BE PROVIDED ON EACH ELECTRICAL AND TELECOMMUNICATIONS SERVICE ENTRANCE, ALONG WITH EACH RADIO AND TELEVISION LEAD-IN BY THE ELECTRICAL CONTRACTOR OR RESPECTIVE SYSTEM INSTALLER.
10. ALL MATERIALS MUST BE U.L. LISTED.
11. INSTALLATION IS BASED UPON ALL ROOF-MOUNTED LIGHTNING PROTECTION COMPONENTS BEING MECHANICALLY FASTENED TO ROOF SURFACE. ANY VARIANCE OR SPECIAL PROVISIONS MUST BE RESPONSIBILITY OF THE ROOFING OR GENERAL CONTRACTOR.
12. ALUMINUM MATERIALS MUST BE USED ON ALUMINUM SURFACES.
13. THE LIGHTNING PROTECTION SYSTEM IS DESIGNED AND DETAILED PER THE CURRENT NFPA 780 AND U.L. 96A CODES.

PLAN NOTES

1 CLASS I AIR TERMINAL, 15 INCHES IN HEIGHT/LENGTH. USE 3/8 INCH DIAMETER FOR COPPER OR 1/2 INCH DIAMETER FOR ALUMINUM. AIR TERMINAL MATERIAL MUST MATCH AND BE COMPATIBLE WITH MATERIAL USED FOR CONDUCTORS. TYPICAL.

2 CLASS I CONDUCTORS MUST BE #17 AWG, 29 STRAND COPPER OR #14 AWG, 14 STRAND ALUMINUM. TYPICAL.

3 DOWN LEAD CONDUCTOR TO GROUND LOOP. PROVIDE PVC SCHEDULE 40 TO PROTECT CONDUCTOR FROM PHYSICAL DAMAGE. CONNECT DOWN LEAD CONDUCTOR TO #1/0 AWG COPPER GROUND LOOP AND USE 3/4 INCH BY 10 FOOT COPPERCLAD GROUND ROD BY EXOTHERMIC CONNECTION. SEE GROUNDING DETAIL.

4 PROVIDE TEST WELL AT DOWNLEAD GROUND ROD LOCATION FOR FUTURE TESTING AND MAINTENANCE.

SYM	DESCRIPTION	DATE	APPR

NAVFAC

NORTH CAROLINA PROFESSIONAL ENGINEER SEAL 34954 JEFFERY T. BRISSMAN 5/13/26

SEAL

CRENSHAW CONSULTING Engineers
www.crenshawconsulting.com
NC LICENSE #C-1166 3700 Glenwood Avenue, Suite 300 Raleigh, North Carolina 27608 919-571-1070 Fax 571-5620

A/E INFO

APPROVED
SIGNATURE OF CO
FOR COMMANDER NAVFAC 5/13/2026
ACTIVITY

SATISFACTORY TO

DES	MKW	DRW	JDC	CHK	JTR
PM/DM					SGL/MDM
BRANCH MANAGER					WRB
CHIEF ENG/ARCH					JWJ
FIRE PROTECTION					HPN

DEPARTMENT OF THE NAVY
NAVAL FACILITIES ENGINEERING SYSTEMS COMMAND
MIDLANT DC CORE
MARINE CORPS BASE

NAVAL FACILITIES ENGINEERING SYSTEMS COMMAND ~ MIDATLANTIC
NAVAL STATION - NORFOLK, VA.
CAMP LEJEUNE, NC

P-1550 SOF MARINE RAIDER BATTALION / COMPANY / TEAM FACILITIES

ROOF PLAN - LIGHTNING PROTECTION

SCALE: AS INDICATED
EPROJECT NO.: 1701820
CONSTR. CONTR. NO.

NAVFAC DRAWING NO.
12903849
SHEET 107 OF 122

A3
CO STG

E-107

FINAL SUBMITTAL

DRAWFORM REVISION: 25 AUGUST 2020

File Path: M:\Camp Lejeune\MARSOC SOF Marine Bn HQ_Team (P-1550)\A3 STORAGE
Print Date: 5/6/2026 2:23:42 PM

PLAN NOTES

1. CONNECT UNIT HEATER. PROVIDE DISCONNECT, CONDUCTORS AND CONDUITS COMPLETE. COORDINATE WITH MECHANICAL.
2. CONNECT HOT WATER PUMP THROUGH VFD. PROVIDE DISCONNECT, CONDUCTORS AND CONDUITS COMPLETE. COORDINATE WITH MECHANICAL.
3. CONNECT BOILER. PROVIDE DISCONNECT, CONDUCTORS AND CONDUITS COMPLETE. COORDINATE WITH MECHANICAL.
4. CONNECT EXHAUST FAN. PROVIDE MOTOR SWITCH, CONDUCTORS AND CONDUITS COMPLETE. COORDINATE WITH MECHANICAL.
5. CONNECT HOT WATER PUMP. PROVIDE DISCONNECT, CONDUCTORS AND CONDUITS COMPLETE. COORDINATE WITH MECHANICAL.
6. CONNECT HVAC CONTROL PANEL. PROVIDE HARD WIRE CONNECTION, CONDUCTORS AND CONDUITS COMPLETE. COORDINATE WITH MECHANICAL.
7. CONNECT MOTORIZED LOUVER. PROVIDE DISCONNECT, CONDUCTORS AND CONDUITS COMPLETE. COORDINATE WITH MECHANICAL.

POWER NOTES

1. SEE VOLTAGE DROP SCHEDULE FOR WIRE SIZING INFORMATION FOR ALL BRANCH CIRCUITS OVER 65' IN LENGTH.
2. ALL RECEPTACLES WITHIN 6 FEET FROM THE OUTSIDE EDGE OF ANY SINK MUST BE GFI PER NEC 210.8(B)(5).
3. SEE ARCHITECTURAL SHEETS FOR INDICATIONS OF RATED WALLS.
4. PROVIDE LABEL PRINTER TYPE LABELING FOR ALL RECEPTACLES INDICATING SOURCE FEED WITH PANEL AND CIRCUIT NUMBER.
5. PROVIDE MACHINE ENGRAVED PLACARD LABELING ATTACHED WITH RIVETS TO ALL DISCONNECTS, PANELS, MOTOR-DISCONNECT SWITCHES INDICATING EQUIPMENT NAME, VOLTAGE AND PHASE, AMPERAGE, HERTZ AND SOURCE FEED.
6. ALL DISCONNECT SWITCHES MUST BE HEAVY DUTY TYPE.
7. CONTRACTOR MUST LOCATE JUNCTION BOXES, CONDUIT BODIES OR OTHER EQUIPMENT OR FITTINGS ABOVE INACCESSIBLE CEILING SUCH THAT THEY HAVE ACCESS PER NEC REQUIREMENTS.
8. COORDINATE UNDERGROUND CONDUIT FOR OUTSIDE EQUIPMENT WITH CONCRETE SLAB.
9. COORDINATE UNDERGROUND TELECOMM CONDUITS AND COMM ROOM LAYOUT WITH BASE COMMUNICATIONS OFFICE VIA CONTRACTING OFFICER.

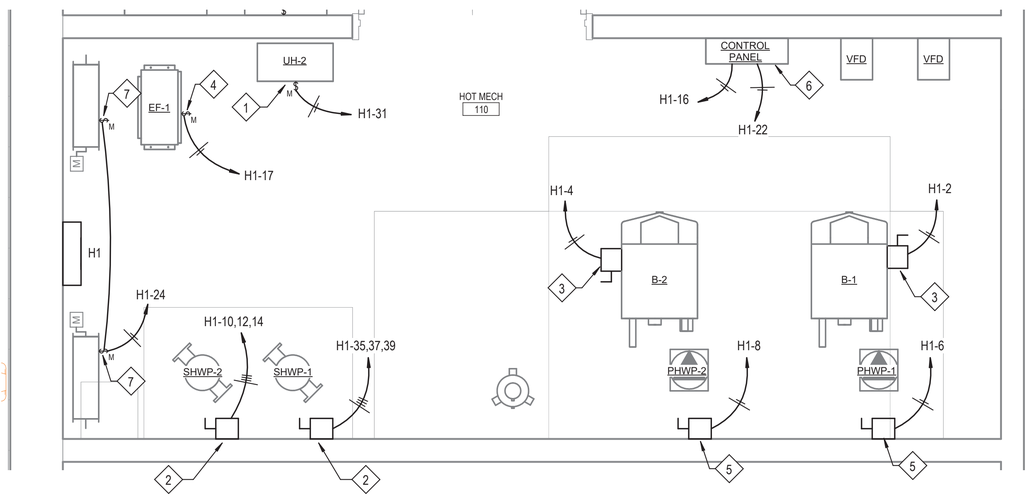

A3 ENLARGED FLOOR PLAN - MECHANICAL ROOMS
1/2" = 1'-0"

GRAPHIC SCALE: 1/2"=1'-0"
2' 0 1' 2' 4'

SYM	DESCRIPTION	DATE	APPR

NAVFAC

NORTH CAROLINA PROFESSIONAL ENGINEER SEAL 34954 JEFFERY T. RITSMAN 5/13/26

SEAL

CRENSHAW CONSULTING Engineers
www.crenshawconsulting.com
NC LICENSE #C-1556 1818 Bush Street, Suite 200 Raleigh, North Carolina 27608 919-871-1070 Fax 871-5620

A/E INFO

APPROVED
Jeffrey T. Ritsman, P.E.
FOR COMMANDER NAVFAC 5/13/2026

ACTIVITY

SATISFACTORY TO

DES	MKW	DRW	JDC	CHK	JTR
PM/DM	SGL/MDM				
BRANCH MANAGER	WRB				
CHIEF ENG/ARCH	JWJ				
FIRE PROTECTION	HPN				

DEPARTMENT OF THE NAVY
NAVAL FACILITIES ENGINEERING SYSTEMS COMMAND
MIDLANT DC CODE
NAVAL FACILITIES ENGINEERING SYSTEMS COMMAND ~ MIDATLANTIC
MARINE CORPS BASE
NAVAL STATION - NORFOLK, VA.
CAMP LEJEUNE, NC

P-1550 SOF MARINE RAIDER
BATTALION / COMPANY / TEAM FACILITIES

ENLARGED FLOOR PLANS

SCALE: AS INDICATED
EPROJECT NO.: 1701820
CONSTR. CONTR. NO.
NAVFAC DRAWING NO. 12903850
SHEET 108 OF 122

A3
CO STG

E-401

FINAL SUBMITTAL
DRAWFORM REVISION: 25 AUGUST 2020

File Path: M:\Camp Lejeune\MARSOC SOF Marine Bn HQ_Team (P-1550)\A3 STORAGE
Print Date: 5/6/2026 2:23:43 PM

NOTE:
THIS DETAIL IS INTENDED AS AN AID ONLY, THE CONTRACTOR IS RESPONSIBLE FOR COMPLYING WITH ALL PROVISIONS AND REQUIREMENTS OF NEC 250 SECTION III INCLUDING THOSE NOT SPECIFICALLY REFERENCED HERE.

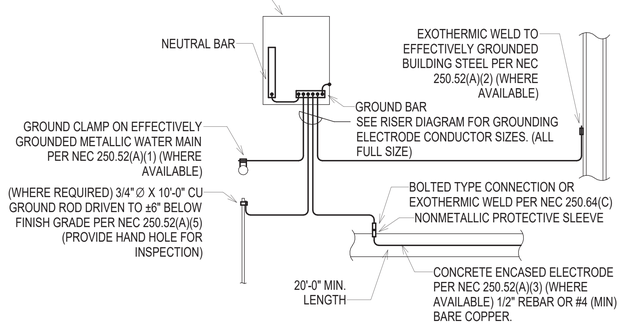

C1 SERVICE GROUND DETAIL
NTS

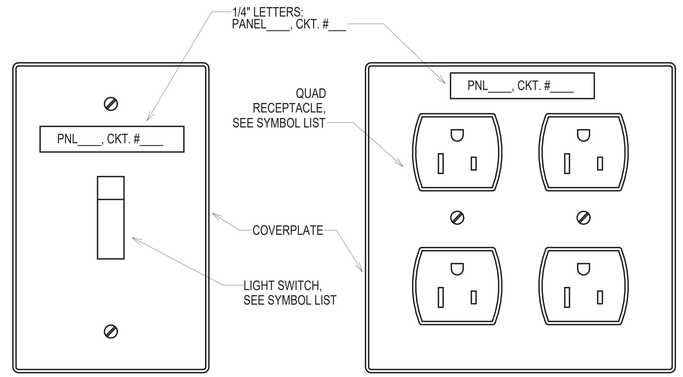

C2 COVERPLATE LABELING DETAIL
NTS

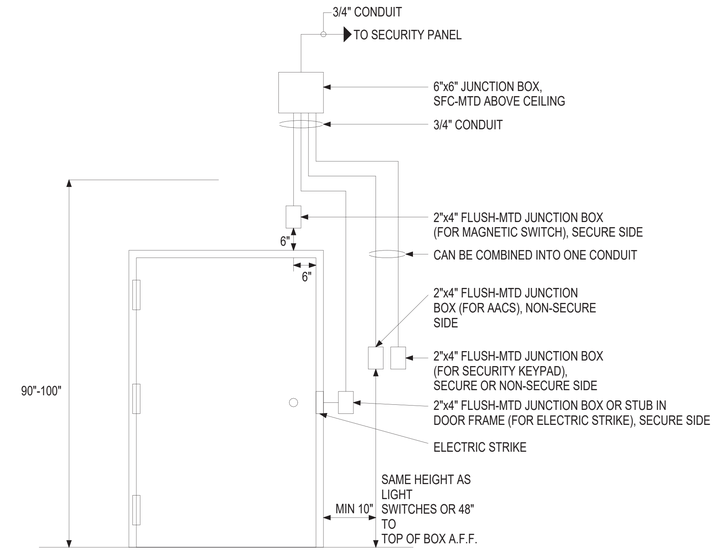

SINGLE DOOR W/ STRIKE, AACS, MAGNETIC SWITCH, SECURITY KEYPAD,
(INDIVIDUAL ITEMS CAN BE DELETED TO ACCOMMODATE SPECIFIC REQUIREMENTS)

C4 NIWC AACS/IDS DOOR DETAIL 1
NTS

TABLE A - WORKING CLEARANCES			
VOLTAGE TO GROUND NOMINAL	MINIMUM CLEAR DISTANCE (FEET)		
	CONDITION: 1	2	3
0-150	3	3	3
151-800	3	3-1/2	4

WHERE THE "CONDITIONS" ARE AS FOLLOWS:

1. EXPOSED LIVE PARTS ON ONE SIDE AND NO LIVE OR EXPOSED GROUNDED PARTS ON THE OTHER SIDE OF THE WORKING SPACE, OR EXPOSED LIVE PARTS ON BOTH SIDES EFFECTIVELY GUARDED BY SUITABLE WOOD OR OTHER INSULATING MATERIALS.
   INSULATED WIRE OR INSULATED BUSBARS OPERATING AT NOT OVER 300V MUST NOT BE CONSIDERED LIVE PARTS.
2. EXPOSED LIVE PARTS ON ONE SIDE AND GROUNDED PARTS ON THE OTHER SIDE.
3. EXPOSED LIVE PARTS ON BOTH SIDES OF THE WORK SPACE (NOT GUARDED AS PROVIDED IN CONDITION 1) WITH THE OPERATOR BETWEEN.

NOTE:

THIS FIGURE ILLUSTRATES THE WORKING SPACE IN FRONT OF THE ELECTRICAL EQUIPMENT REQUIRED BY SECTION 110.26 OF THE NATIONAL ELECTRICAL CODE.

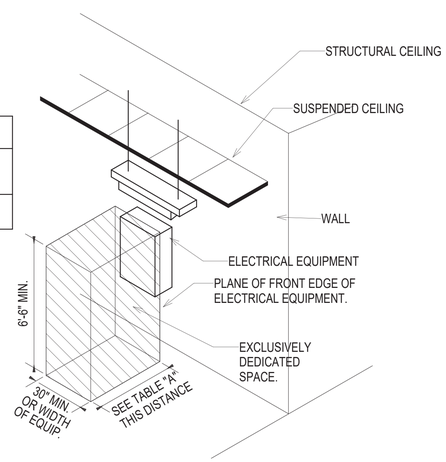

A1 NEC 110.26 WORKING CLEARANCE DETAIL
NTS

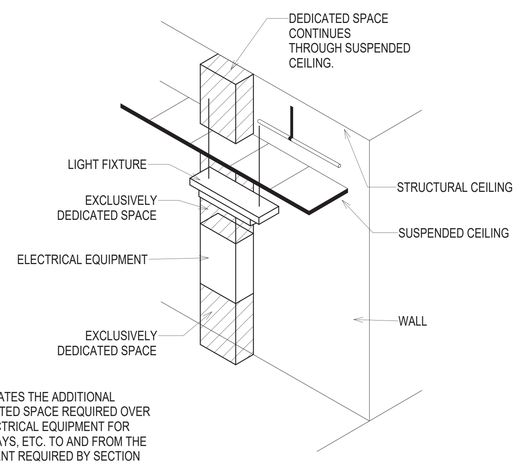

NOTE:
THIS FIGURE ILLUSTRATES THE ADDITIONAL EXCLUSIVELY DEDICATED SPACE REQUIRED OVER AND UNDER THE ELECTRICAL EQUIPMENT FOR THE CABLES, RACEWAYS, ETC. TO AND FROM THE ELECTRICAL EQUIPMENT REQUIRED BY SECTION 110.26 (F) OF THE NATIONAL ELECTRICAL CODE.

A2 NEC 110.26(F) DEDICATED SPACE DETAIL
NTS

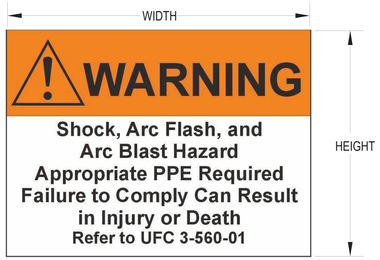

NOTES:

1. PROVIDE SELF-ADHESIVE VINYL LABEL TO AFFIX TO ELECTRICAL EQUIPMENT TO WARN OF ARC FLASH HAZARDS.
2. THE LABEL FORMAT AND TEXT MUST BE IN ACCORDANCE WITH THE FIGURE.
3. THE LABEL MUST BE LOCATED ON THE EQUIPMENT TO BE CLEARLY VISIBLE TO QUALIFIED PERSONS BEFORE EXAMINATION, ADJUSTMENT, SERVICING, OR MAINTENANCE OF THE EQUIPMENT.
4. THE SIZE OF THE LABEL MUST BE MINIMUM:

EQUIPMENT TYPE	HEIGHT	WIDTH
INDOOR	2"	3"
OUTDOOR	3"	4.5"

5. A DOWNLOADABLE WINDOWS METAFILE IS AVAILABLE ON THE WHOLE BUILDING DESIGN GUIDE WEBSITE (WWW.WDBG.ORG) FOR USE IN A LABEL MAKING MACHINE.

A. THE FILE IS LOCATED ON THE "NAVFAC CADD DETAILS" PAGE. TO NAVIGATE TO THIS LOCATION, FOLLOW: HOME > DOCUMENTS & REFERENCES > CCB > CADD LIBRARY > NAVFAC CADD RESOURCES > NAVFAC CADD DETAILS.

B. ALTERNATIVELY, TYPE IN THE FOLLOWING ADDRESS IN INTERNET EXPLORER:
HTTP://WWW.WBDG.ORG/CCB/BROWSE_CAT.PHP?C=232

GENERAL ARC FLASH WARNING LABEL

SKETCH DATE	APRIL 2015	STYLE	AF-1

SYM	DESCRIPTION	DATE	APPR

NAVFAC

NORTH CAROLINA PROFESSIONAL ENGINEER SEAL 34954 JEFFERY T. RITSCHMAN 5/13/26

CRENSHAW CONSULTING Engineers
www.crenshawconsulting.com
NC LICENSE #C-1166 5010 Bush Street, Suite 200 Raleigh, North Carolina 27609 919-871-1070 Fax 871-5620

A/E INFO

APPROVED
John J. Chelius, P.E.
FOR COMMANDER NAVFAC 5/13/2026

ACTIVITY

SATISFACTORY TO

DES	MKW	DRW	JDC	CHK	JTR
PM/DM	SGL/MDM				
BRANCH MANAGER	WRB				
CHIEF ENG/ARCH	JWJ				
FIRE PROTECTION	HPN				

DEPARTMENT OF THE NAVY
NAVAL FACILITIES ENGINEERING SYSTEMS COMMAND
NAVAL FACILITIES ENGINEERING SYSTEMS COMMAND ~ MIDATLANTIC
NAVAL STATION - NORFOLK, VA.
MIDLANT DC CODE
MARINE CORPS BASE
CAMP LEJEUNE, NC
P-1550 SOF MARINE RAIDER
BATTALION / COMPANY / TEAM FACILITIES
ELECTRICAL DETAILS

SCALE: AS INDICATED
EPROJECT NO.: 1701820
CONSTR. CONTR. NO.

NAVFAC DRAWING NO. 12903851
SHEET 109 OF 122

A3
CO STG
E-501

FINAL SUBMITTAL
DRAWFORM REVISION: 25 AUGUST 2020

File Path: M:\Camp Lejeune\MARSOC SOF Marine Bn HQ_Team (P-1550)\A3 STORAGE
Print Date: 5/6/2026 2:23:44 PM

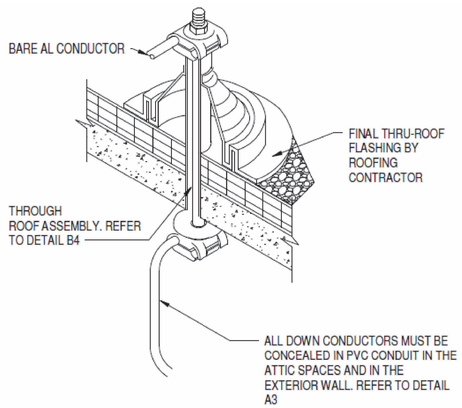

C1 THRU ROOF DETAIL A
NTS

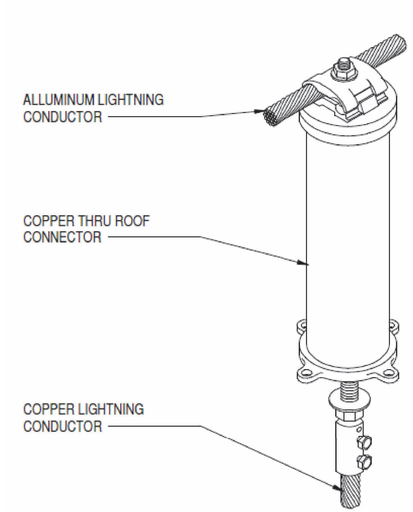

C2 THRU ROOF ASSEMBLY
NTS

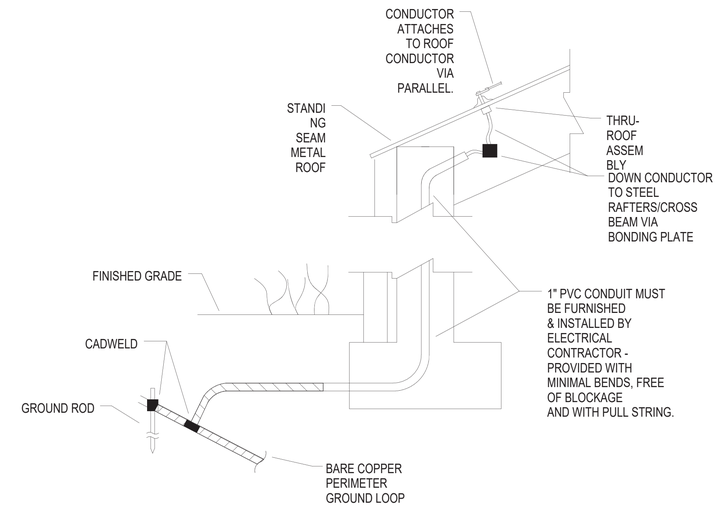

C4 LIGHTNING PROTECTION GROUNDING DETAIL
NTS

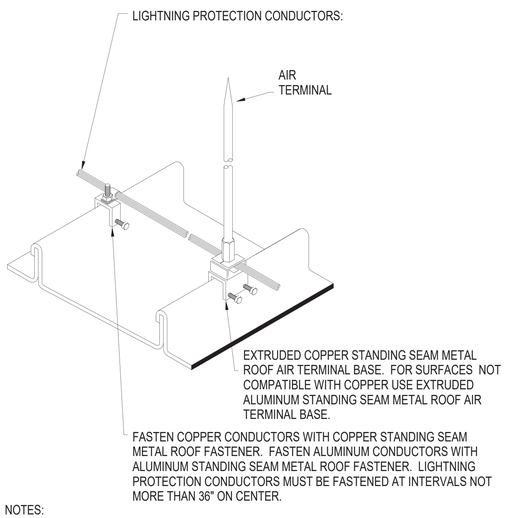

NOTES:
AIR TERMINAL SPACING MUST CONFORM TO NFPA 780 & UL 96A REQUIREMENTS.
MATERIAL COMPATIBILITY MUST CONFORM TO NFPA 780 & 96A REQUIREMENTS.
MATERIAL CLASS MUST CONFORM TO NFPA 780 & UL 96A REQUIREMENTS.
AIR TERMINALS MUST BE UL LISTED & CAL-OSHA APPROVED.

AIR TERMINAL DETAIL

NTS

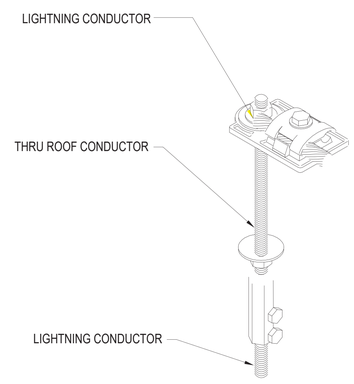

THRU WALL ASSEMBLY DETAIL

NTS LRODTWL1

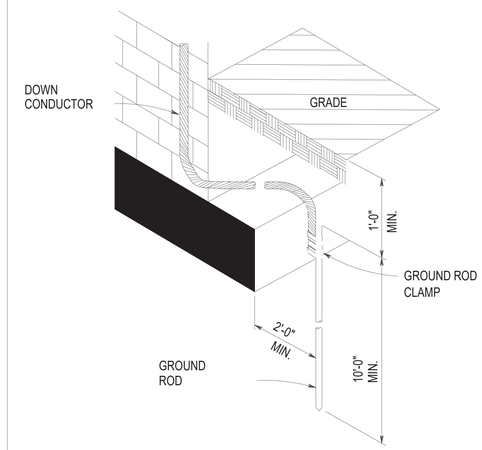

GROUNDING DETAIL

NTS BLDGSG

SYM	DESCRIPTION	DATE	APPR

NAVFAC

SEAL

CRENSHAW CONSULTING Engineers
NC LICENSE #C-1166 www.crenshawconsulting.com 5700 Bush Street, Suite 200 Raleigh, North Carolina 27609 919-871-1070 Fax 871-5620

A/E INFO

APPROVED
FOR COMMANDER NAVFAC 5/13/2026
ACTIVITY

SATISFACTORY TO

DES	MKW	DRW	JDC	CHK	JTR
PM/DM	SGL/MDM				
BRANCH MANAGER	WRB				
CHIEF ENG/ARCH	JWJ				
FIRE PROTECTION	HPN				

DEPARTMENT OF THE NAVY
NAVAL FACILITIES ENGINEERING SYSTEMS COMMAND
MIDLANT DC CORE
MARINE CORPS BASE
NAVAL FACILITIES ENGINEERING SYSTEMS COMMAND ~ MIDATLANTIC
NAVAL STATION - NORFOLK, VA.
CAMP LEJEUNE, NC

P-1550 SOF MARINE RAIDER BATTALION / COMPANY / TEAM FACILITIES

ELECTRICAL DETAILS

SCALE: AS INDICATED
EPROJECT NO.: 1701820
CONSTR. CONTR. NO.

NAVFAC DRAWING NO. 12903852
SHEET 110 OF 122

A3
CO STG

E-502

FINAL SUBMITTAL
DRAWFORM REVISION: 25 AUGUST 2020

File Path: M:\Camp Lejeune\MARSOC SOF Marine Bn HQ_Team (P-1550)\A3 STORAGE
Print Date: 5/6/2026 2:23:45 PM

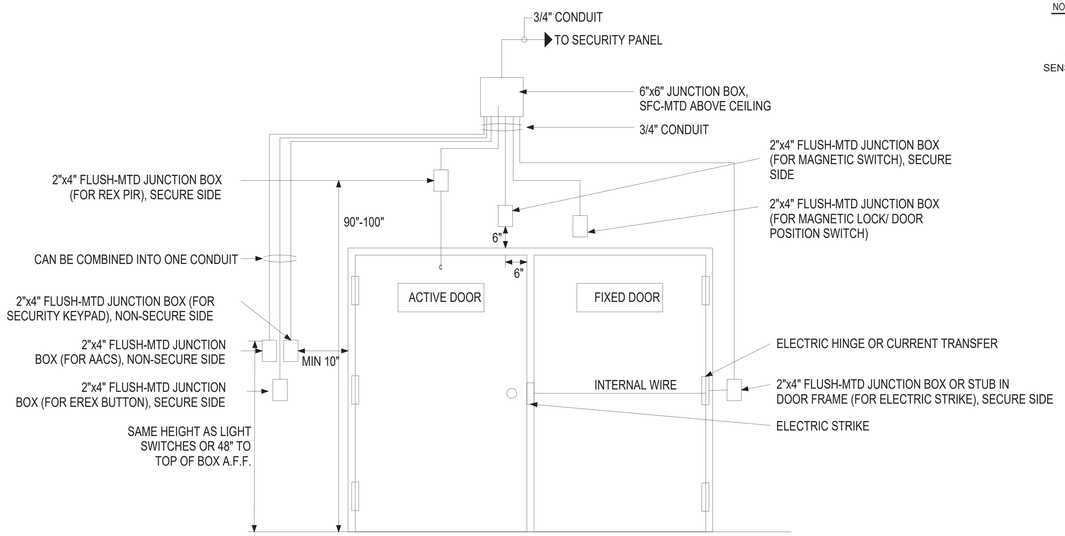

DOUBLE DOOR W/ STRIKE, AACS, MAGNETIC SWITCH, SECURITY KEYPAD, AND PIR-REX
(INDIVIDUAL ITEMS CAN BE DELETED TO ACCOMMODATE SPECIFIC REQUIREMENTS)

C1 NIWC AACS/IDS DOOR DETAIL 3

NTS

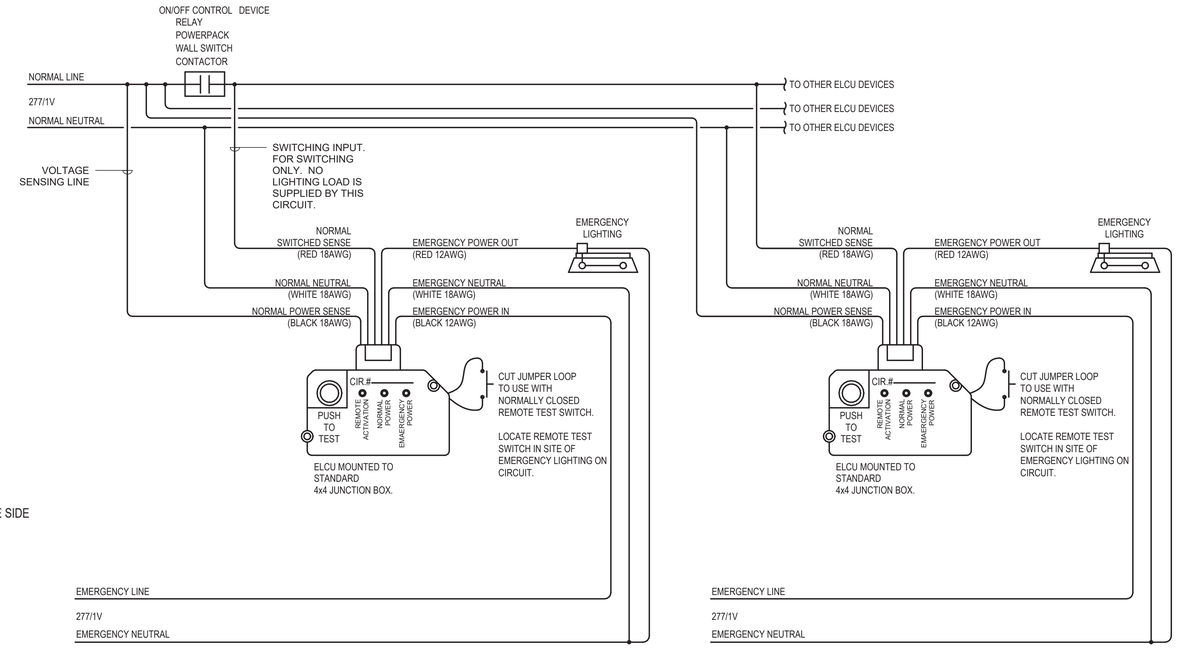

EMERGENCY LIGHTING CONTROL UNIT
WATTSTOPPER #ELCU-200

C3 EMERGENCY LIGHTING CONTROL UNIT WIRING DIAGRAM

NTS

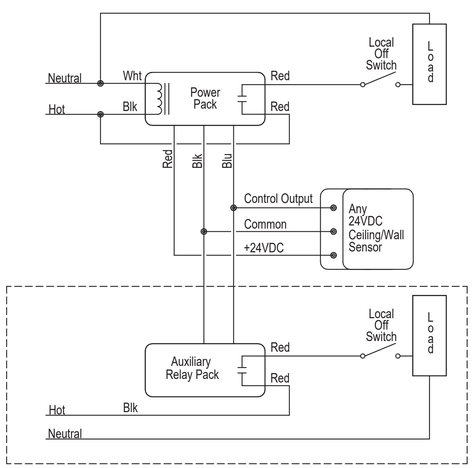

OPTIONAL IF TWO SWITCHES USE SAME MOTION SENSOR

A1 LOW VOLTAGE MOTION SENSOR WIRING DIAGRAM

NTS

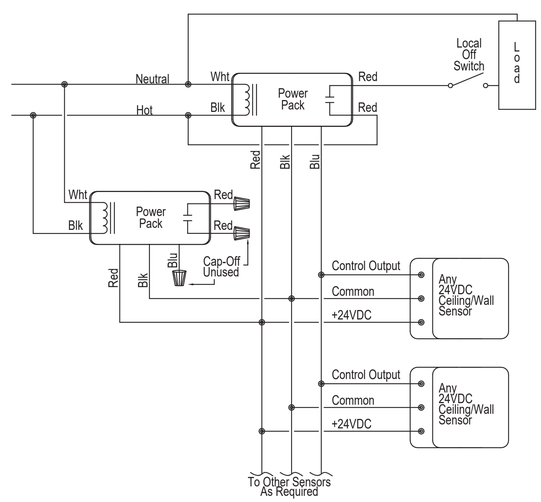

A2 LOW VOLTAGE MOTION SENSOR W/ MULTIPLE POWER PACKS WIRING DIAGRAM

NTS

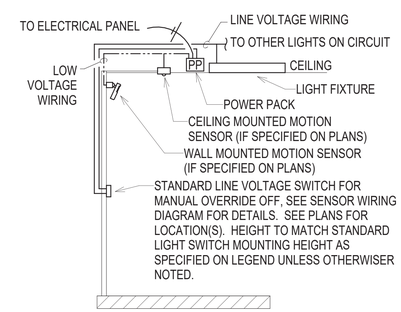

NOTES

1. THERE MUST BE A MAXIMUM OF 2 MOTION SENSORS PER POWER PACK.
2. CEILING MOUNTED MOTION SENSORS MUST BE MOUNTED AT LEAST 6' FROM A DIFFUSER.
3. MOTION SENSORS AND MOTION SENSOR SWITCHES MUST BE SET FOR 30 MINUTE TIME DELAY. CONTRACTOR MUST ADJUST SENSITIVITY ON SENSOR AS REQUIRED TO MEET ROOM CONDITIONS AND SIZE.
4. CONTRACTOR MUST PROVIDE THE PROPER QUANTITY OF POWER PACKS FOR THE DESIGN. IN ROOMS THAT UTILIZE 277 AND 120 VOLT LIGHTING, A MINIMUM OF 2 POWER PACKS WILL BE REQUIRED (1 FOR EACH VOLTAGE).
5. DUAL TECHNOLOGY SENSORS MUST BE PROGRAMMED SUCH THAT BOTH TECHNOLOGIES ARE NEEDED TO TURN ON THE LIGHTS INITIALLY, BUT ONLY ONE TECHNOLOGY IS REQUIRED TO KEEP THE LIGHTS ON.

A4 TYPICAL MOTION SENSOR W/ LINE VOLTAGE SWITCH DETAIL

NTS

SYM	DESCRIPTION	DATE	APPR

NAVFAC

NORTH CAROLINA PROFESSIONAL ENGINEER SEAL 34954 JEFFERY T. BITSKAMAN 5/13/26

CRENSHAW CONSULTING Engineers
NC LICENSE #C-1166 www.crenshawconsulting.com 3700 Glenwood Avenue, Suite 300 Raleigh, North Carolina 27609 919-871-1070 Fax 871-5620

A/E INFO

APPROVED
Jeffrey T. Bitskaman, P.E.
FOR COMMANDER NAVFAC 5/13/2026
ACTIVITY
SATISFACTORY TO
DES MKW | DRW JDC | CHK JTR
PM/DM SGL/MDM
BRANCH MANAGER WRB
CHIEF ENG/ARCH JWJ
FIRE PROTECTION HPN

DEPARTMENT OF THE NAVY
NAVAL FACILITIES ENGINEERING SYSTEMS COMMAND
NAVAL FACILITIES ENGINEERING SYSTEMS COMMAND ~ MIDATLANTIC
NAVAL STATION - NORFOLK, VA.
MIDLANT DC CORE
MARINE CORPS BASE
CAMP LEJEUNE, NC

P-1550 SOF MARINE RAIDER BATTALION / COMPANY / TEAM FACILITIES

ELECTRICAL DETAILS

SCALE: AS INDICATED
EPROJECT NO.: 1701820
CONSTR. CONTR. NO.
NAVFAC DRAWING NO. 12903853
SHEET 111 OF 122

A3
CO STG
E-503

FINAL SUBMITTAL
DRAWFORM REVISION: 25 AUGUST 2020

File Path: M:\Camp Lejeune\MARSOC SOF Marine Bn HQ_Team (P-1550)\A3 STORAGE
Print Date: 5/6/2026 2:23:46 PM

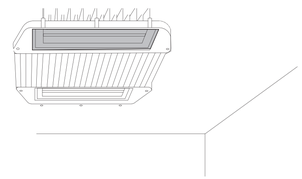

NOTE: THIS SKETCH IS A NON-PROPRIETARY GRAPHIC REPRESENTATION OF A LUMINAIRE THAT MAY MEET THE SPECIFICATION REQUIREMENTS. IT IS NOT INTENDED TO INDICATE A CERTAIN MANUFACTURER OR PREFERENCE.

LUMINAIRE REQUIREMENTS:

1. HOUSING - HEAVY GAUGE COLD ROLLED STEEL OR CAST ALUMINUM HOUSING.
2. OPTICS - POLYCARBONATE DIFFUSE LENS.
3. LIGHT SOURCE - SOLID STATE LEDS, 3500K CCT UON, MINIMUM 80 CRI UON, AND MINIMUM EFFICACY OF 140 LUMENS/WATT UON. INITIAL LUMEN OUTPUT AS INDICATED IN LUMINAIRE SCHEDULE.
4. DRIVER - REPLACEABLE, INTEGRAL, HIGH-EFFICIENCY DIMMABLE DRIVER WITH MINIMUM 0.9 PF, OPERATING VOLTAGE OF 120-277V, THERMAL MANAGEMENT, AND < 20% THD. ON/OFF CONTROL AND FULLY DIMMABLE DOWN TO 10% MINIMUM OR AS INDICATED IN LUMINAIRE SCHEDULE.
5. CERTIFICATION - UL LISTED FOR DAMP OR WET LOCATION, ROHS COMPLIANT, DLC QUALIFIED. COMPLIES WITH IES LM79, LM80 AND TM21 TESTING STANDARDS.
6. MOUNTING - PENDANT, STEM, OR SURFACE MOUNTED WITH STAINLESS STEEL MOUNTING HARDWARE.
7. OPTIONS - INTEGRAL OCCUPANCY SENSOR, EMERGENCY BATTERY BACK-UP, VARIOUS OPTICAL DISTRIBUTIONS.

LED INDUSTRIAL HIGH-BAY

REVISED: NOVEMBER 2020 | LIGHTING PLATE: NL-24

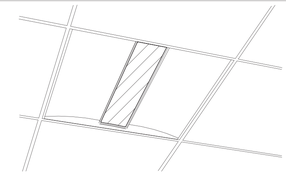

NOTE: THIS SKETCH IS A NON-PROPRIETARY GRAPHIC REPRESENTATION OF A LUMINAIRE THAT MAY MEET THE SPECIFICATION REQUIREMENTS. IT IS NOT INTENDED TO INDICATE A CERTAIN MANUFACTURER OR PREFERENCE.

LUMINAIRE REQUIREMENTS:

1. HOUSING - HEAVY GAUGE COLD ROLLED STEEL OR DIE CAST ALUMINUM. SIZE SHOWN AS INDICATED IN LUMINAIRE SCHEDULE.
2. OPTICS - FROSTED ACRYLIC OR POLYCARBONATE LENS WITH DIE FORMED COLD ROLLED SHEET STEEL REFLECTORS.
3. LIGHT SOURCE - SOLID STATE LEDS, 3500K CCT UON, MINIMUM 80 CRI UON, AND MINIMUM EFFICACY OF 100 LUMENS/WATT UON. INITIAL LUMEN OUTPUT AS INDICATED IN LUMINAIRE SCHEDULE.
4. DRIVER - REPLACEABLE, INTEGRAL, HIGH-EFFICIENCY DIMMABLE DRIVER WITH MINIMUM 0.9 PF, OPERATING VOLTAGE OF 120-277V, THERMAL MANAGEMENT, AND < 20% THD. ON/OFF CONTROL AND FULLY DIMMABLE DOWN TO 10% MINIMUM OR AS INDICATED IN LUMINAIRE SCHEDULE.
5. CERTIFICATION - UL LISTED FOR DRY OR DAMP LOCATION, ROHS COMPLIANT. DLC QUALIFIED. COMPLIES WITH IES LM79, LM80 AND TM21 TESTING STANDARDS.
6. MOUNTING - RECESSED IN HARD OR ACOUSTICAL TILE CEILING.
7. OPTIONS - EMERGENCY BATTERY BACK-UP, INTEGRAL OCCUPANCY/VACANCY SENSOR, VARIOUS SIZE AND OUTPUT OPTIONS, SURFACE-MOUNTING KIT.

DIRECT/INDIRECT LED LUMINAIRE

REVISED: NOVEMBER 2020 | LIGHTING PLATE: NL-1

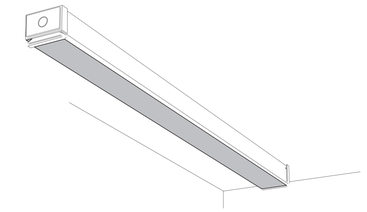

NOTE: THIS SKETCH IS A NON-PROPRIETARY GRAPHIC REPRESENTATION OF A LUMINAIRE THAT MAY MEET THE SPECIFICATION REQUIREMENTS. IT IS NOT INTENDED TO INDICATE A CERTAIN MANUFACTURER OR PREFERENCE.

LUMINAIRE REQUIREMENTS:

1. HOUSING - EXTRUDED ALUMINUM OR WELDED STEEL HOUSING WITH SNAP-ON END CAPS. SIZE AS INDICATED IN LUMINAIRE SCHEDULE.
2. OPTICS - DIFFUSE ACRYLIC LENS.
3. LIGHT SOURCE - SOLID STATE LEDS, 3500K CCT UON, MINIMUM 80 CRI UON, AND MINIMUM EFFICACY OF 90 LUMENS/WATT UON. INITIAL LUMEN OUTPUT AS INDICATED IN LUMINAIRE SCHEDULE.
4. DRIVER - REPLACEABLE, INTEGRAL, HIGH-EFFICIENCY DIMMABLE DRIVER WITH MINIMUM 0.9 PF, OPERATING VOLTAGE OF 120-277V, THERMAL MANAGEMENT, AND < 20% THD. ON/OFF CONTROL AND FULLY DIMMABLE DOWN TO 10% MINIMUM OR AS INDICATED IN LUMINAIRE SCHEDULE.
5. CERTIFICATION - UL LISTED FOR DAMP OR WET LOCATION, ROHS COMPLIANT. DLC QUALIFIED. COMPLIES WITH IES LM79, LM80 AND TM21 TESTING STANDARDS.
6. MOUNTING - PENDANT, STEM, OR SURFACE MOUNTED WITH STAINLESS STEEL MOUNTING HARDWARE.
7. OPTIONS - INTEGRAL OCCUPANCY SENSOR, EMERGENCY BATTERY BACK-UP, VARIOUS PROFILE DIMENSIONS AND RUN LENGTHS, AND VARIOUS CLEAR OR FROSTED POLYCARBONATE LENSES.

LED INDUSTRIAL LIGHT

REVISED: NOVEMBER 2020 | LIGHTING PLATE: NL-23

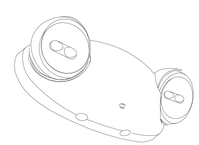

NOTE: THIS SKETCH IS A NON-PROPRIETARY GRAPHIC REPRESENTATION OF A LUMINAIRE THAT MAY MEET THE SPECIFICATION REQUIREMENTS. IT IS NOT INTENDED TO INDICATE A CERTAIN MANUFACTURER OR PREFERENCE.

LUMINAIRE REQUIREMENTS:

1. HOUSING - HIGH-IMPACT, UV-STABILIZED, INJECTION-MOLDED THERMOPLASTIC HOUSING.
2. LIGHT SOURCE - SOLID STATE LEDS.
3. DRIVER - INTEGRAL, HIGH-EFFICIENCY DRIVER WITH MINIMUM 0.9 PF, OPERATING VOLTAGE OF 120-277V, THERMAL MANAGEMENT, AND < 20% THD. ON/OFF CONTROL AND BATTERY BACKUP INTEGRAL TO UNIT.
4. CERTIFICATION - NFPA 101. UL LISTED FOR DAMP OR WET LOCATION, ROHS COMPLIANT. COMPLIES WITH IES LM79, LM80 AND TM21 TESTING STANDARDS.
5. MOUNTING - WALL SURFACE MOUNTED.
6. OPTIONS - WHITE OR BLACK FINISH.

LED EMERGENCY LIGHTING UNIT (ELU)

REVISED: NOVEMBER 2020 | LIGHTING PLATE: NL-26

NOTE: THIS SKETCH IS A NON-PROPRIETARY GRAPHIC REPRESENTATION OF A LUMINAIRE THAT MAY MEET THE SPECIFICATION REQUIREMENTS. IT IS NOT INTENDED TO INDICATE A CERTAIN MANUFACTURER OR PREFERENCE.

LUMINAIRE REQUIREMENTS:

1. HOUSING - DIE-CAST ALUMINUM OR HIGH-IMPACT, UV-STABILIZED, INJECTION-MOLDED THERMOPLASTIC.
2. LIGHT SOURCE - SOLID STATE LEDS.
3. DRIVER - INTEGRAL, HIGH-EFFICIENCY DRIVER WITH MINIMUM 0.9 PF, OPERATING VOLTAGE OF 120/277V, THERMAL MANAGEMENT, AND < 20% THD.
4. CERTIFICATION - NFPA 101, UL LISTED FOR DAMP OR WET LOCATION, AND ROHS COMPLIANT.
5. MOUNTING - SURFACE MOUNTED ON CEILING AND/OR WALL.
6. OPTIONS - RED OR GREEN LETTERING, ONE- OR TWO-SIDED. ELU REMOTE HEAD CAPABILITIES. BATTERY BACKUP.

EXIT SIGN

REVISED: NOVEMBER 2020 | LIGHTING PLATE: NL-28

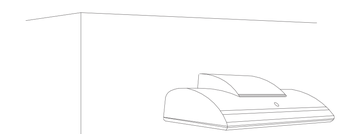

NOTE: THIS SKETCH IS A NON-PROPRIETARY GRAPHIC REPRESENTATION OF A LUMINAIRE THAT MAY MEET THE SPECIFICATION REQUIREMENTS. IT IS NOT INTENDED TO INDICATE A CERTAIN MANUFACTURER OR PREFERENCE.

LUMINAIRE REQUIREMENTS:

1. HOUSING - DIE-CAST OR EXTRUDED ALUMINUM WITH INTEGRAL PASSIVE COOLING MECHANISM. HEAT SINK INCORPORATED DIRECTLY INTO HOUSING OR DRIVER COMPARTMENT.
2. OPTICS - PRECISION MOLDED ACRYLIC LENS WITH TYPE II, III, OR IV DISTRIBUTIONS. BUG UPLIGHT RATING OF U0, WITH GLARE RATING AS DETERMINED BY LIGHTING ZONE INSTALLED.
3. LIGHT SOURCE - SOLID STATE LEDS, 3000K CCT UON, MINIMUM 70 CRI UON, AND MINIMUM EFFICACY OF 80 LUMENS/WATT UON. INITIAL LUMEN OUTPUT AS INDICATED IN LUMINAIRE SCHEDULE.
4. DRIVER - REPLACEABLE, INTEGRAL, HIGH-EFFICIENCY DIMMABLE DRIVER WITH MINIMUM 0.9 PF, OPERATING VOLTAGE OF 120-277V, THERMAL MANAGEMENT, AND < 20% THD. ON-OFF CONTROL AND FULLY DIMMABLE DOWN TO 10% MINIMUM OR AS INDICATED IN LUMINAIRE SCHEDULE.
5. CERTIFICATION - UL LISTED FOR WET LOCATION, ROHS COMPLIANT. COMPLIES WITH IES LM79, LM80 AND TM21 TESTING STANDARDS.
6. MOUNTING - SURFACE MOUNTED WITH STAINLESS STEEL MOUNTING HARDWARE.
7. OPTIONS - VARIOUS LIGHT DISTRIBUTIONS. INTEGRAL MOTION SENSOR, PHOTOCELL, BATTERY BACK-UP.

LED WALL PACK

REVISED: NOVEMBER 2020 | LUMINAIRE PLATE: XL-10

SYM	DESCRIPTION	DATE	APPR

NAVFAC

NORTH CAROLINA PROFESSIONAL ENGINEER SEAL 34954 JEFFERY T. RITSMAN 5/6/2026

SEAL

CRENSHAW CONSULTING Engineers
www.crenshaw-consulting.com
NC LICENSE #C-1166 3210 Blue Street, Suite 200 Raleigh, North Carolina 27609 919-871-1070 Fax 871-5620

A/E INFO

APPROVED
FOR COMMANDER NAVFAC 5/13/2026
ACTIVITY

SATISFACTORY TO

DES	MKW	DRW	JDC	CHK	JTR
PM/DM	SGL/MDM				
BRANCH MANAGER	WRB				
CHIEF ENG/ARCH	JWJ				
FIRE PROTECTION	HPN				

DEPARTMENT OF THE NAVY
NAVAL FACILITIES ENGINEERING SYSTEMS COMMAND
MIDLANT DC CORE
MARINE CORPS BASE

NAVAL FACILITIES ENGINEERING SYSTEMS COMMAND ~ MIDATLANTIC
NAVAL STATION - NORFOLK, VA
CAMP LEJEUNE, NC

P-1550 SOF MARINE RAIDER BATTALION / COMPANY / TEAM FACILITIES

ELECTRICAL DETAILS

SCALE: AS INDICATED
EPROJECT NO.: 1701820
CONSTR. CONTR. NO.

NAVFAC DRAWING NO. 12903854
SHEET 112 OF 122

E-504

A3
CO STG

FINAL SUBMITTAL

DRAWFORM REVISION: 25 AUGUST 2020

File Path: M:\Camp Lejeune\MARSOC SOF Marine Bn HQ_Team (P-1550)\A3 STORAGE
Print Date: 5/6/2026 2:23:47 PM

LIGHT FIXTURE SCHEDULE

TYPE	DESCRIPTION	LIGHTING PLATE	VOLTAGE	LIGHT SOURCE	LUMENS	CCT	DIMMING LEVEL	LOAD	NOTES
A	2'X4' LED VOLUMETRIC RECESSED	NL-1	120 V	LED	4,000 LUMENS	3,500 K	-	32 VA	
F	4' LED STRIP	NL-23	120 V	LED	4,000 LUMENS	3,500 K	-	35 VA	
F7	4' LED STRIP	NL-23	120 V	LED	7,000 LUMENS	3,500 K	-	35 VA	
H	2'X4' LED HIGHBAY	NL-24	120 V	LED	18,000 LUMENS	3,500 K	-	115 VA	
K	EXTERIOR WALLPACK	XL-10	120 V	LED	6,000 LUMENS	4,000 K	-	48 VA	WET LISTED
KE	EXTERIOR WALLPACK W/EM BATTERY	XL-10	120 V	LED	6,000 LUMENS	4,000 K	-	48 VA	WET LISTED. PROVIDE WITH ZERO DEGREE BATTERY.
EMERGENCY									
	WALL MOUNTED EMERGENCY LIGHT	NL-26	120 V	LED	500 LUMENS			6 VA	--
C	CEILING MOUNTED EMERGENCY LIGHT	NL-26	120 V	LED	500 LUMENS			6 VA	--
	EXIT SIGN/EMERGENCY LIGHT COMBO (BATTERY)	NL-26/NL-28	120 V	LED				15 VA	

LIGHT FIXTURE SCHEDULE NOTES

1. ALL FIXTURES, BALLASTS, AND DRIVERS MUST COMPLY WITH INTERNATIONAL BUILDING CODE, INTERNATIONAL ENERGY CONSERVATION CODE AND MUST BE UL LISTED. ALL LED DRIVERS MUST COMPLY WITH NEMA 410.
2. ALL FIXTURES NOTED AS EMERGENCY MUST HAVE EMERGENCY ILLUMINATION FUNCTIONALITY AS DESCRIBED BELOW. IN ALL CASES, BATTERIES MUST BE RATED FOR THE ENVIRONMENT IN WHICH THEY ARE INSTALLED.
   - INTERIOR LED FIXTURES MUST HAVE 1,100 LUMEN (MINIMUM) OUTPUT, 90 MINUTE BATTERY PACK. LED DOWNLIGHTS MUST HAVE A 500 LUMEN (MINIMUM) OUTPUT, 90 MINUTE BATTERY PACK OR MUST BE PROVIDED WITH A FULL OUTPUT INVERTER.
   - EXTERIOR EMERGENCY LIGHTS MUST HAVE AN INTEGRAL EXTERIOR RATED (0° F) OR REMOTE MOUNTED 1,100 LUMEN OUTPUT 90 MINUTE BATTERY.
   - TEST SWITCHES FOR EMERGENCY BATTERIES MUST BE INTEGRAL TO THE FIXTURE SERVED BY THE BATTERY.
   - EMERGENCY FIXTURES MUST OPERATE ONE LAMP WHERE MULTIPLE EMERGENCY FIXTURES ARE TO BE INSTALLED IN AN AREA, AND MUST OPERATE TWO LAMPS WHERE THE LOSS OF A SINGLE LAMP WOULD RENDER THE SPACE IN TOTAL DARKNESS DURING EMERGENCY OPERATION.
   - EMERGENCY LIGHTING UNITS WITH DEDICATED EMERGENCY HEADS MUST PROVIDE 1 F.C. FOR AT LEAST 25' FOR A MINIMUM OF 90 MINUTES.
3. FIXTURES INDICATED AS DIMMABLE MUST BE PROVIDE WITH ALL NECESSARY COMPONENTS (BALLAST, DRIVER, SWITCH ETC.) AS NECESSARY TO ACHIEVE 5% (OR LESS) MINIMUM DIMMING UNLESS A SPECIFIC MINIMUM DIMMING LEVEL IS INDICATED.

SYM	DESCRIPTION	DATE	APPR

NAVFAC

NORTH CAROLINA PROFESSIONAL ENGINEER SEAL 34954 JEFFERY T. RITSMAN 5/13/26

CRENSHAW CONSULTING engineers
www.crenshawconsulting.com
NC LICENSE #C-1556
3700 Glenwood Avenue, Suite 300
Raleigh, North Carolina 27609
919-871-1070 Fax 871-5620

A/E INFO

APPROVED
RICHARD W. BUSH
FOR COMMANDER NAVFAC 5/13/2026

ACTIVITY

SATISFACTORY TO

DES	MKW	DRW	JDC	CHK	JTR
PM/DM	SGL/MDM				
BRANCH MANAGER	WRB				
CHIEF ENG/ARCH	JWJ				
FIRE PROTECTION	HPN				

DEPARTMENT OF THE NAVY
NAVAL FACILITIES ENGINEERING SYSTEMS COMMAND
MIDLANT DC CORE
MARINE CORPS BASE
NAVAL FACILITIES ENGINEERING SYSTEMS COMMAND ~ MIDATLANTIC
NAVAL STATION - NORFOLK, VA.
CAMP LEJEUNE, NC

P-1550 SOF MARINE RAIDER
BATTALION / COMPANY / TEAM FACILITIES

ELECTRICAL SCHEDULES

SCALE: AS INDICATED
EPROJECT NO.: 1701820
CONSTR. CONTR. NO.

A3
CO STG

NAVFAC DRAWING NO.
12903855
SHEET 113 OF 122
E-601

FINAL SUBMITTAL
DRAWFORM REVISION: 25 AUGUST 2020

File Path: M:\Camp Lejeune\MARSOC SOF Marine Bn HQ_Team (P-1550)\A3 STORAGE
Print Date: 5/6/2026 2:23:47 PM

Branch Panel: P1

Supply From: MDP
Mounting: SURFACE
Enclosure: NEMA 1
Accessory:

Volts: 120/208 Wye
Phases: 3
Wires: 4
Poles: 42

A.I.C. Rating: 22,000
Mains Type: MAIN LUGS ONLY
Mains Rating: 150 A

CKT	Circuit Description	Trip	Poles	Fn	A		B		C		Fn	Poles	Trip	Circuit Description	CKT
1	117 FMCP	20 A	1	L	0.5	0.1					L	1	20 A	EMERGENCY LIGHTING	2
3	117 TRN	20 A	1	L			0.5	0.1			L	1	20 A	EMERGENCY LIGHTING	4
5									0.3	0.2		1	20 A	CH-1 RECEPTACLE	6
7	JOCKEY PUMP	15 A	3		0.3	0.2						1	20 A	EXTERIOR LIGHTING	8
9							0.3	1.0			G	1	20 A	CHILLER HEAT TRACE	10
11									1.0	0.2		1	20 A	101 OPEN STORAGE RECEPTACLE	12
13	OVERHEAD DOOR	15 A	3		1.0	1.1						1	20 A	101 OPEN STORAGE RECEPTACLE	14
15							1.0	0.2				1	20 A	101 OPEN STORAGE RECEPTACLE	16
17	110-112 RECEPTACLES	20 A	1						0.5	0.2		1	20 A	101 OPEN STORAGE RECEPTACLE	18
19	EXTERIOR RECEPTACLES	20 A	1		0.7	0.4						1	20 A	101 OPEN STORAGE RECEPTACLE	20
21	109-112 LIGHTING	20 A	1				0.7	1.1				1	20 A	101 OPEN STORAGE RECEPTACLE	22
23	101 OPEN STORAGE RECEPTACLE	20 A	1						0.4	0.2		1	20 A	101 OPEN STORAGE RECEPTACLE	24
25	101 OPEN STORAGE RECEPTACLE	20 A	1		0.4	0.2						1	20 A	101 OPEN STORAGE RECEPTACLE	26
27	101 OPEN STORAGE RECEPTACLE	20 A	1				0.4	0.3				1	20 A	EXTERIOR LIGHTING	28
29	101 OPEN STORAGE RECEPTACLE	20 A	1						0.4	0.9		1	20 A	101 OPEN STORAGE LIGHTING	30
31	101 OPEN STORAGE RECEPTACLE	20 A	1		0.4	0.8						1	20 A	101 OPEN STORAGE LIGHTING	32
33	UH-3	15 A	1				0.1	1.0			G	1	20 A	CHILLER PIPING HEAT TRACE	34
35	SPARE	20 A	1	--					0.0	0.0	--	1	20 A	SPARE	36
37	SPARE	20 A	1	--	0.0	0.0									38
39	SPARE	20 A	1	--			0.0	0.0				3	60 A	SPD	40
41	SPARE	20 A	1	--					0.0	0.0					42
				Connected Load:	6.0 kVA		6.6 kVA		4.2 kVA						
					52.4 A		57.0 A		35.3 A						

Load Classification	Connected Load	Demand Factor	Demand Load	Panel Totals	
Lighting	2.936 kVA	125.00%	3.670 kVA	**Total Connected Load:**	16.8 kVA
Other	7.100 kVA	100.00%	7.100 kVA		46.7 A
Receptacle	6.660 kVA	100.00%	6.660 kVA		
Lighting - Interior	0.120 kVA	125.00%	0.150 kVA	**Total Demand Load:**	17.6 kVA
					48.8 A

Notes:

Branch Panel: P2

Supply From: MDP
Mounting: SURFACE
Enclosure: NEMA 1
Accessory:

Volts: 120/208 Wye
Phases: 3
Wires: 4
Poles: 42

A.I.C. Rating: 10,000
Mains Type: MAIN BREAKER
Mains Rating: 150 A

CKT	Circuit Description	Trip	Poles	Fn	A		B		C		Fn	Poles	Trip	Circuit Description	CKT
1					1.0	1.0						1	20 A	118 UNISEX HAND DRYER	2
3	OVERHEAD DOOR	15 A	3				1.0	0.7			G	1	20 A	101 WATER COOLER	4
5									1.0	0.4		1	20 A	117-118 UNISEX RECEPTACLES	6
7	101 OPEN STORAGE LTG (NORTH)	20 A	1		0.8	0.7					G	1	20 A	101 WATER COOLER	8
9	101 OPEN STORAGE LTG (NORTH)	20 A	1				0.8	1.0				1	20 A	115 UNISEX HAND DRYER	10
11	EXTERIOR RECEPTACLES	20 A	1						0.5	0.4		1	20 A	114-115 RECEPTACLES	12
13	101 OPEN STORAGE RECEPTACLE	20 A	1		0.2	0.3						1	20 A	114-119 LIGHTING	14
15	101 OPEN STORAGE RECEPTACLE	20 A	1				0.2	0.2				1	20 A	118 UNISEX SENSOR CONTROLS	16
17	101 OPEN STORAGE RECEPTACLE	20 A	1						0.2	0.2		1	20 A	115 UNISEX SENSOR CONTROLS	18
19	101 OPEN STORAGE RECEPTACLE	20 A	1		0.2	0.0					--	1	20 A	SPARE	20
21	101 OPEN STORAGE RECEPTACLE	20 A	1				0.2	0.0			--	1	20 A	SPARE	22
23	101 OPEN STORAGE RECEPTACLE	20 A	1						1.1	0.0	--	1	20 A	SPARE	24
25	101 OPEN STORAGE RECEPTACLE	20 A	1		0.4	0.0					--	1	20 A	SPARE	26
27	101 OPEN STORAGE RECEPTACLE	20 A	1				0.2	0.0			--	1	20 A	SPARE	28
29	101 OPEN STORAGE RECEPTACLE	20 A	1						0.2	0.0	--	1	20 A	SPARE	30
31	101 OPEN STORAGE RECEPTACLE	20 A	1		0.2	0.0					--	1	20 A	SPARE	32
33	101 OPEN STORAGE RECEPTACLE	20 A	1				0.2	0.0			--	1	20 A	SPARE	34
35	101 OPEN STORAGE RECEPTACLE	20 A	1						0.7	0.0	--	1	20 A	SPARE	36
37	101 OPEN STORAGE RECEPTACLE	20 A	1		0.4	0.0									38
39	EXTERIOR RECEPTACLES	20 A	1				0.7	0.0				3	60 A	SPD	40
41	116 STORAGE RECEPTACLES	20 A	1						0.9	0.0					42
				Connected Load:	5.1 kVA		5.1 kVA		5.5 kVA						
					42.5 A		42.7 A		45.9 A						

Load Classification	Connected Load	Demand Factor	Demand Load	Panel Totals	
Lighting	1.945 kVA	125.00%	2.431 kVA	**Total Connected Load:**	15.7 kVA
Other	6.760 kVA	100.00%	6.760 kVA		43.6 A
Receptacle	7.020 kVA	100.00%	7.020 kVA		
				Total Demand Load:	16.2 kVA
					45.0 A

Notes:

Branch Panel: T1

Supply From: MDP
Mounting: SURFACE
Enclosure: NEMA 1
Accessory:

Volts: 120/208 Wye
Phases: 3
Wires: 4
Poles: 30

A.I.C. Rating: 10,000
Mains Type: MAIN BREAKER
Mains Rating: 100 A

CKT	Circuit Description	Trip	Poles	Fn	A		B		C		Fn	Poles	Trip	Circuit Description	CKT
1	SERVER RACK QUAD	20 A	1		0.4	0.0					--	1	20 A	SPARE	2
3	SERVER RACK QUAD	20 A	1				0.4	0.0			--	1	20 A	SPARE	4
5	SERVER RACK QUAD	20 A	1						0.4	0.0	--	1	20 A	SPARE	6
7	SERVER RACK QUAD	20 A	1		0.4	0.0					--	1	20 A	SPARE	8
9	SERVER RACK RECEPTACLE	30 A	2				2.0	0.0			--	1	20 A	SPARE	10
11									2.0	0.0	--	1	20 A	SPARE	12
13	113 COMM RECEPTACLES	20 A	1		0.7	0.0					--	1	20 A	SPARE	14
15	113 COMM RECEPTACLES	20 A	1				1.1	0.0			--	1	20 A	SPARE	16
17	113 AACS PANEL	20 A	1						0.5	0.0	--	1	20 A	SPARE	18
19	DCU-1	25 A	2		1.7	0.0					--	1	20 A	SPARE	20
21							1.7	--			--	1	--	SPACE	22
23	113 DAC-1 CONDENSATE PUMP	15 A	1						0.2	--	--	1	--	SPACE	24
25	SPARE	20 A	1	--	0.0	--					--	1	--	SPACE	26
27	SPARE	20 A	1	--			0.0	--			--	1	--	SPACE	28
29	SPARE	20 A	1	--					0.0	--	--	1	--	SPACE	30
				Connected Load:	3.1 kVA		5.1 kVA		3.1 kVA						
					25.8 A		42.5 A		25.5 A						

Load Classification	Connected Load	Demand Factor	Demand Load	Panel Totals	
Other	8.000 kVA	100.00%	8.000 kVA	**Total Connected Load:**	11.2 kVA
Receptacle	3.240 kVA	100.00%	3.240 kVA		31.2 A
				Total Demand Load:	11.2 kVA
					31.2 A

Notes:

Branch Panel: P3

Supply From: MDP
Mounting: SURFACE
Enclosure: NEMA 1
Accessory:

Volts: 120/208 Wye
Phases: 3
Wires: 4
Poles: 42

A.I.C. Rating: 22,000
Mains Type: MAIN LUGS ONLY
Mains Rating: 150 A

CKT	Circuit Description	Trip	Poles	Fn	A		B		C		Fn	Poles	Trip	Circuit Description	CKT
1	DCU-2	25 A	2		1.7	1.0						3	15 A	OVERHEAD DOOR	2
3							1.7	1.0							4
5	111 DAC-2 CONDENSATE PUMP	15 A	1						0.2	1.0					6
7	D-WH-1	25 A	1		2.0	0.0					--	1	20 A	SPARE	8
9	110-112 RECEPTACLES	20 A	1				0.5	--			--	1	--	SPACE	10
11	109 MECHANICAL	20 A	1						0.5	--	--	1	--	SPACE	12
13	SPARE	20 A	1	--	0.0	--					--	1	--	SPACE	14
15	SPARE	20 A	1	--			0.0	--			--	1	--	SPACE	16
17	SPARE	20 A	1	--					0.0	--	--	1	--	SPACE	18
19	SPARE	20 A	1	--	0.0	--					--	1	--	SPACE	20
21	SPARE	20 A	1	--			0.0	--			--	1	--	SPACE	22
23	SPARE	20 A	1	--					0.0	--	--	1	--	SPACE	24
25	SPARE	20 A	1	--	0.0	--					--	1	--	SPACE	26
27	SPARE	20 A	1	--			0.0	--			--	1	--	SPACE	28
29	SPARE	20 A	1	--					0.0	--	--	1	--	SPACE	30
31	SPARE	20 A	1	--	0.0	--					--	1	--	SPACE	32
33	SPARE	20 A	1	--			0.0	--			--	1	--	SPACE	34
35	SPARE	20 A	1	--					0.0	--	--	1	--	SPACE	36
37	SPACE	--	1	--	--	--					--	1	--	SPACE	38
39	SPACE	--	1	--			--	--			--	1	--	SPACE	40
41	SPACE	--	1	--					--	--	--	1	--	SPACE	42
				Connected Load:	4.7 kVA		3.2 kVA		1.7 kVA						
					40.6 A		28.4 A		14.5 A						

Load Classification	Connected Load	Demand Factor	Demand Load	Panel Totals	
Other	8.500 kVA	100.00%	8.500 kVA	**Total Connected Load:**	9.6 kVA
Receptacle	1.080 kVA	100.00%	1.080 kVA		26.6 A
				Total Demand Load:	9.6 kVA
					26.6 A

Notes:

PANEL SCHEDULE NOTES

1. VALUES FOR DEMAND LOADS INCLUDE ALL CODE FACTORS SUCH AS 125% FOR CONTINUOUS LOADS, 125% LARGEST MOTOR, ETC.
2. BREAKER SIZES SHOWN FOR NEW EQUIPMENT IN PANEL SCHEDULES ARE FOR REFERENCE ONLY, SEE EQUIPMENT CONNECTION SCHEDULE(S) FOR ADDITIONAL INFORMATION. WHERE BREAKER / FUSE SIZE BETWEEN SCHEDULES CONFLICT, THE EQUIPMENT CONNECTION SCHEDULE MUST TAKE PRECEDENCE.
3. CIRCUIT BREAKERS USED FOR HVAC EQUIPMENT MUST BE 'HACR' TYPE.
4. ALL PANEL DIRECTORIES MUST BE COMPLETED IN ACCORDANCE WITH NEC 408.4. LABELING FOR PANELBOARD DIRECTORIES MUST BE SPECIFIC.
5. CONTRACTOR MUST PROVIDE MULTI-POLE BREAKERS IN LIEU OF ALL SINGLE POLE BREAKERS SHOWN WHEN MULTI-WIRE BRANCH CIRCUITS ARE INSTALLED PER NEC 210.4(B).
6. CONTRACTOR MUST LABEL ALL BREAKERS FEEDING EMERGENCY AND EXIT LIGHTING PER NEC 700.12(F).
7. PROVIDE ARC FLASH HAZARD WARNING LABELS AS REQUIRED ON ALL PANELS AFFECTED BY THIS WORK PER NEC 110.16.
8. CONTRACTOR MUST PROVIDE IDENTIFICATION FOR NEW FEEDERS AND ANY NEW BRANCH CIRCUITS PER NEC 200.6, 210.5, AND 215.2.
9. ALL SHUNT TRIP TYPE BREAKERS MUST BE 120V SHUNT TRIP ACTUATED UNLESS OTHERWISE NOTED.
10. CIRCUIT BREAKERS USED FOR SWITCHING LIGHTS MUST BE LISTED FOR SWITCHING AND MARKED ACCORDING TO NEC 240.83(D).
11. THE FUNCTION (FN) COLUMN OF PANEL SCHEDULES INDICATES THAT BREAKER FOR RESPECTIVE CIRCUIT MUST BE PROVIDED WITH THE FOLLOWING FUNCTIONS:
    A: ARC-FAULT CIRCUIT INTERRUPTER (AFCI) PROTECTION
    G: GROUND-FAULT CIRCUIT INTERRUPTER (GFCI) PROTECTION
    H: BREAKER HASP TO PREVENT UNINTENTIONAL OPENING
    L: LOCKABLE ACCORDING TO NEC 110.25
12. PROVIDE LABELING ON ALL EQUIPMENT TO INDICATE MINIMUM CLEARANCE REQUIREMENTS.
13. FIRE ALARM EQUIPMENT MUST BE CONNECTED ON LOCKED BREAKERS. BREAKERS MUST BE RED IN COLOR AND LABELED FIRE PROTECTION/LIFE SAFETY.

SYM	DESCRIPTION	DATE	APPR.

NAVFAC

NORTH CAROLINA PROFESSIONAL ENGINEER SEAL 34954 JEFFERY T. RITSMAN 5/13/26

CRENSHAW CONSULTING Engineers
NC LICENSE #C-1556
www.crenshawconsulting.com
3518 Bush Street, Suite 200
Raleigh, North Carolina 27609
919-871-1070 Fax 871-5620

A/E INFO

APPROVED
SIGNATURE
FOR COMMANDER NAVFAC 5/13/2026

ACTIVITY

SATISFACTORY TO

DES	MKW	DRW	JDC	CHK	JTR
PM/DM	SGL/MDM				
BRANCH MANAGER	WRB				
CHIEF ENG/ARCH	JWJ				
FIRE PROTECTION	HPN				

DEPARTMENT OF THE NAVY
NAVAL FACILITIES ENGINEERING SYSTEMS COMMAND
MIDLANT DC CORE
MARINE CORPS BASE
NAVAL FACILITIES ENGINEERING SYSTEMS COMMAND ~ MIDATLANTIC
NAVAL STATION - NORFOLK, VA
CAMP LEJEUNE, NC

P-1550 SOF MARINE RAIDER BATTALION / COMPANY / TEAM FACILITIES

ELECTRICAL SCHEDULES

SCALE: AS INDICATED
EPROJECT NO.: 1701820
CONSTR. CONTR. NO.

A3
CO STG

NAVFAC DRAWING NO. 12903856
SHEET 114 OF 122
E-602

FINAL SUBMITTAL
DRAWFORM REVISION: 25 AUGUST 2020

File Path: M:\Camp Lejeune\MARSOC SOF Marine Bn HQ_Team (P-1550)\A3 STORAGE
Print Date: 5/6/2026 2:23:48 PM

MECHANICAL EQUIPMENT CONNECTIONS SCHEDULE

MARK	DESCRIPTION	FURN BY	KVA	HP	VOLTAGE	PHASE	AMPERAGE	DISCONNECT SIZE	NEMA	BREAKER SIZE/FUSE SIZE	WIRE SIZE	GROUND SIZE	CONDUIT	NOTES
DCU-1	DUCTLESS SPLIT SYSTEM CONDENSING	MECH	3.3	-	208	1	16.0	30/2	4X	25/2	3-#10	#10	3/4"	
DAC-1	DUCTLESS SPLIT AIR HANDLING UNIT	MECH	0.1	-	120	1	1.0	30/2	1	15/2	3-#12	#12	3/4"	INDOOR UNIT POWERED BY OUTDOOR UNIT
DCU-2	DUCTLESS SPLIT SYSTEM CONDENSING	MECH	3.3	-	208	1	16.0	30/2	4X	25/2	3-#10	#10	3/4"	
DAC-2	DUCTLESS SPLIT AIR HANDLING UNIT	MECH	0.1	-	120	1	1.0	30/2	1	15/2	3-#12	#12	3/4"	INDOOR UNIT POWERED BY OUTDOOR UNIT
-	CONDENSATE PUMP	MECH	0.2	-	120	1	1.5	M	1	15/1	2-#12	#12	3/4"	
CHWP-1	CHILLED WATER PUMP	MECH	2.7	2.0	208	3	7.5	30/3	1	15/3	4-#12	#12	3/4"	
CHWP-2	CHILLED WATER PUMP	MECH	2.7	2.0	208	3	7.5	30/3	1	15/3	4-#12	#12	3/4"	
PHWP-1	PRIMARY HOT WATER PUMP	MECH	1.1	0.5	120	1	9.8	30/1	1	20/1	2-#12	#12	3/4"	
PHWP-2	PRIMARY HOT WATER PUMP	MECH	1.1	0.5	120	1	9.8	30/1	1	20/1	2-#12	#12	3/4"	
SHWP-1	SECONDARY HOT WATER PUMP	MECH	1.4	1.0	208	3	3.9	30/3	1	15/3	4-#12	#12	3/4"	
SHWP-2	SECONDARY HOT WATER PUMP	MECH	1.4	1.0	208	3	3.9	30/3	1	15/3	4-#12	#12	3/4"	
CH-1	CHILLER	MECH	71.3	-	208	3	198.0	400	4X	250/3	4-250 KCM	#4	4"	
B-1	BOILER	MECH	0.5	-	120	1	3.8	30/1	1	20/1	2-#12	#12	3/4"	
B-2	BOILER	MECH	0.5	-	120	1	3.8	30/1	1	20/1	2-#12	#12	3/4"	
UH-1	HOT WATER UNIT HEATER	MECH	0.1	-	120	1	0.9	M	1	15/1	2-#12	#12	3/4"	
UH-2	HOT WATER UNIT HEATER	MECH	0.1	-	120	1	0.9	M	1	15/1	2-#12	#12	3/4"	
UH-3	HOT WATER UNIT HEATER	MECH	0.1	-	120	1	0.9	M	1	15/1	2-#12	#12	3/4"	
AHU-1	AIR HANDLING UNIT SUPPLY	MECH	16.0	-	208	3	44.5	60/3	1	50/3	4-#8	#10	3/4"	
	AIR HANDLING UNIT EXHAUST	MECH	4.2	-	208	3	11.6	30/3	1	20/3	4-#12	#12	3/4"	
	AIR HANDLING UNIT MARINE LIGHTS	MECH	0.4	-	120	1	3.3	M	1	15/1	2-#12	#12	3/4"	
DH-1	DEHUMIDIFIER	MECH	0.9	-	120	1	7.2	M	1	15/1	2-#12	#12	3/4"	
EF-1	EXHAUST FAN	MECH	0.4	-	120	1	3.3	M	1	15/1	2-#12	#12	3/4"	
L-1 THRU L-4	LOUVER	MECH	0.1	-	120	1	0.8	M	1	15/1	2-#12	#12	3/4"	
D-WH-1	DOMESTIC WATER HEATER	PLUMB	2.0	-	120	1	16.7	30/1	1	25/1	2-#10	#10	3/4"	
-	OVERHEAD ROLL UP DOOR	CFCI	3.0	-	208	3	8.3	30/3	1	15/3	4-#12	#12	3/4"	
-	JOCKEY PUMP	FIRE	1.4	1.0	208	3	4.0	30/3	1	15/3	4-#12	#12	3/4"	

EQUIPMENT CONNECTIONS NOTES:

1. ALL DISCONNECTS FOR EQUIPMENT MUST BE OF HEAVY DUTY TYPE.
2. BREAKER SIZES FOR ALL EQUIPMENT SIZED AT MOCP WHERE APPLICABLE.
3. EVERY EFFORT HAS BEEN MADE TO MATCH BREAKER/FUSE SIZES LISTED IN THIS TABLE WITH BREAKER SIZES LISTED IN PANEL SCHEDULES. WHERE DISCREPANCIES EXIST, VALUES SHOWN IN THIS TABLE MUST BE USED. IN ALL CASES, CONTRACTOR MUST COORDINATE REQUIRED BREAKER/FUSE SIZES WITH EQUIPMENT PROVIDER (MECH/PLUMB/ETC) AND ACTUAL EQUIPMENT INSTALLED ON SITE.
4. AN 'M' IN THE DISCONNECT COLUMN INDICATES A MOTOR SWITCH IS TO BE USED AS THE DISCONNECTING MEANS.

SYM	DESCRIPTION	DATE	APPR

NAVFAC

NORTH CAROLINA PROFESSIONAL ENGINEER SEAL 34954 JEFFERY T. RITSMAN 5/13/26

CRENSHAW CONSULTING ENGINEERS
www.crenshaw-consulting.com
NC LICENSE #C-1166 3210 Blue Street, Suite 200 Raleigh, North Carolina 27609 919-871-1070 fax 871-5620

A/E INFO

APPROVED
FOR COMMANDER NAVFAC 5/13/2026
ACTIVITY

SATISFACTORY TO

DES MKW	DRW JDC	CHK JTR
PM/DM	SGL/MDM
BRANCH MANAGER	WRB
CHIEF ENG/ARCH	JWJ
FIRE PROTECTION	HPN

DEPARTMENT OF THE NAVY
NAVAL FACILITIES ENGINEERING SYSTEMS COMMAND
MIDLANT DC CORE
MARINE CORPS BASE
NAVAL FACILITIES ENGINEERING SYSTEMS COMMAND ~ MIDATLANTIC
NAVAL STATION - NORFOLK, VA
CAMP LEJEUNE, NC
P-1550 SOF MARINE RAIDER BATTALION / COMPANY / TEAM FACILITIES
ELECTRICAL SCHEDULES

SCALE: AS INDICATED
EPROJECT NO.: 1701820
CONSTR. CONTR. NO.

A3
CO STG
NAVFAC DRAWING NO. 12903857
SHEET 115 OF 122
E-603

FINAL SUBMITTAL
DRAWFORM REVISION: 25 AUGUST 2020

File Path: M:\Camp Lejeune\MARSOC SOF Marine Bn HQ_Team (P-1550)\A3 STORAGE
Print Date: 5/6/2026 2:23:50 PM

Switchboard: MDP

Enclosure: NEMA 1
Mounting:
Volts: 120/208 Wye
Phases: 3
Wires: 4
A.I.C. Rating: 22,000
Mains Type: MAIN BREAKER
Mains Rating: 800.0 A

CKT	Circuit Description	# of Poles	Trip Rating	Load	Remarks
1	PANEL 'P1'	3	150 A	16.8 kVA	
2	PANEL 'P2'	3	150 A	15.7 kVA	
3	PANEL 'T1'	3	100 A	11.2 kVA	
4	CH-1 CHILLER	3	250 A	71.3 kVA	
5	PANEL 'H1'	3	150 A	34.7 kVA	
6	PANEL 'P3'	3	150 A	9.6 kVA	
7	SPARE	1	20 A	0.0 kVA	
8	SPARE	1	20 A	0.0 kVA	
9	SPARE	1	20 A	0.0 kVA	
10	SPARE	1	20 A	0.0 kVA	
11	SPARE	1	20 A	0.0 kVA	
12	SPARE	1	20 A	0.0 kVA	
13	SPARE	1	20 A	0.0 kVA	
14	SPARE	1	20 A	0.0 kVA	
15	SPARE	1	20 A	0.0 kVA	
16	SPARE	1	20 A	0.0 kVA	
17	SPARE	1	20 A	0.0 kVA	
18	SPARE	1	20 A	0.0 kVA	
19	SPARE	1	20 A	0.0 kVA	
20	SPARE	1	20 A	0.0 kVA	
21	SPARE	1	20 A	0.0 kVA	
22	SPARE	1	20 A	0.0 kVA	
23	SPARE	1	20 A	0.0 kVA	
24	SPD	3	60 A	0.0 kVA	
			Total Connected Load:	159.4 kVA	
				442.3 A	

Load Classification	Connected Load	Demand Factor	Demand Load	Panel Totals	
Lighting	4.881 kVA	125.00%	6.101 kVA	**Total Connected Load:**	159.4 kVA
Other	136.360 kVA	100.00%	136.360 kVA		442.3 A
Receptacle	18.000 kVA	77.78%	14.000 kVA		
Lighting - Interior	0.120 kVA	125.00%	0.150 kVA	**Total Demand Load:**	156.6 kVA
					434.7 A

Notes:
PANEL MUST BE SE RATED.

Branch Panel: H1

Supply From: MDP
Mounting: SURFACE
Enclosure: NEMA 1
Accessory:
Volts: 120/208 Wye
Phases: 3
Wires: 4
Poles: 42
A.I.C. Rating: 22,000
Mains Type: MAIN BREAKER
Mains Rating: 150 A

CKT	Circuit Description	Trip	Poles	Fn	A		B		C		Fn	Poles	Trip	Circuit Description	CKT
1					5.3	0.5						1	20 A	B-1	2
3	AHU-1 SUPPLY	50 A	3				5.3	0.5				1	20 A	B-2	4
5									5.3	1.1		1	20 A	PHWP-1	6
7					1.4	1.1						1	20 A	PHWP-2	8
9	AHU-1 EXHAUST	20 A	3				1.4	0.5							10
11									1.4	0.5		3	15 A	SHWP-2	12
13	AHU-1 MARINE LIGHTS	15 A	1		0.4	0.5									14
15	DH-1	15 A	1				0.9	0.2				1	20 A	HVAC CONTROL PANEL	16
17	EF-1	15 A	1						0.4	0.2		1	20 A	HVAC CONTROL PANEL	18
19					0.9	0.2						1	15 A	MOTORIZED LOUVERS	20
21	CHWP-1	15 A	3				0.9	0.2				1	20 A	HVAC CONTROL PANEL	22
23									0.9	0.2		1	15 A	MOTORIZED LOUVERS	24
25					0.9	0.0					--	1	20 A	SPARE	26
27	CHWP-2	15 A	3				0.9	0.0			--	1	20 A	SPARE	28
29									0.9	0.0	--	1	20 A	SPARE	30
31	UH-2	15 A	1		0.1	0.0					--	1	20 A	SPARE	32
33	UH-3	15 A	1				0.1	0.0			--	1	20 A	SPARE	34
35									0.5	0.0	--	1	20 A	SPARE	36
37	SHWP-1	15 A	3		0.5	--					--	1	--	SPACE	38
39							0.5	--			--	1	--	SPACE	40
41	HVAC CONTROL PANEL	20 A	1						0.2	--	--	1	--	SPACE	42
			Connected Load:		11.8 kVA		11.4 kVA		11.6 kVA						
					98.3 A		94.7 A		96.6 A						

Load Classification	Connected Load	Demand Factor	Demand Load	Panel Totals	
Other	34.700 kVA	100.00%	34.700 kVA	**Total Connected Load:**	34.7 kVA
					96.3 A
				Total Demand Load:	34.7 kVA
					96.3 A

Notes:

FIRE PUMP NOTES:

1. ALL WIRING ASSOCIATED WITH THE FIRE PUMP IN PUMP ROOM SHALL COMPLY WITH ALL REQUIREMENTS OF NEC 695.6.
2. ROUTE FIRE PUMP CONDUITS SUFFCIEIENTLY AWAY FROM CONDUIT FOR BUILDING SERVICE TO COMPLY WITH NEC 230.72(B).

FIRE PUMP VOLTAGE DROP CALCUATIONS (PER NEC 695.7):

INITIAL VOLTAGE: 208/3
FIRE PUMP HORSEPOWER: 25 HP
CONDUCTOR LENGTH: 25'
CONDUCTOR SIZE: #3 CU

	AMPS	VOLTAGE DROP
MOTOR STARTING CONDITIONS	404.0 AMPS	2.1% (4.3 V)
115% OF FULL LOAD CURRENT	86.0 AMPS	0.4% (0.9 V)

ELECTRICAL RISER FEEDER SCHEDULE

FEEDER ID	PHASE	# OF RUNS	FEEDER DESCRIPTION PER RUN
SERVICE LATERALS			
S100	3	1	4 - #3, 4" C
S800	3	3	4 - 300 KCM, 4" C
THREE-PHASE FEEDERS			
F100	3	1	4 - #3, #8 GND, 1 1/4" C
F150	3	1	4 - #1/0, #6 GND, 2" C
FP100	3	1	4 - #3, #8 GND, 1 1/4" C
GROUNDING ELECTRODE CONDUCTORS			
G#3/0	-	1	#3/0 GND

ELECTRICAL RISER NOTES

1. PROVIDE SPD WITH 240 KA RATING PER PHASE, UL 1449 3RD EDITION LISTED, AND RATED FOR SERVICE ENTRANCE.
2. PROVIDE 1-4" SPARE CONDUIT WITH PULL WIRE.
3. REFER TO SITE PLAN ELECTRICAL SHEETS FOR CONTINUATION.
4. PHOTOCELL ON ROOF FACING NORTH TO TURN LIGHTS ON. ADJUST SENSITIVITY AS REQURIED FOR PROPER OPERATION.
5. 7-DAY PROGRAMMABLE TIME CLOCK TO TURN LIGHTS OFF W/SEASONABLE DAYLIGHT SCHEDULE ADJUSTMENT AND 10 HOUR BATTERY BACKUP.
6. NEW MECHANICALLY HELD 20/4, 4 POLE LIGHTING CONTACTOR WITH 120/1 COIL. CONNECT SPECIFIED CIRCUITS THROUGH CONTACTOR AS REQUIRED. SEE LIGHTING PLANS FOR CIRCUITS.
7. PROVIDE SPD WITH 240 KA RATING PER PHASE, UL 1449 3RD EDITION LISTED, AND RATED FOR SENSITIVE ELECTRONIC EQUIPMENT WITH SINEWAVE TRACKING TECHNOLOGY.
8. CONNECT FIRE PUMP CONTROLLER. COORDINATE WITH FIRE PROTECTION.
9. FIRE PUMP CONNECTED THROUGH CONTROLLER. COORDINATE WITH FIRE PROTECTION.

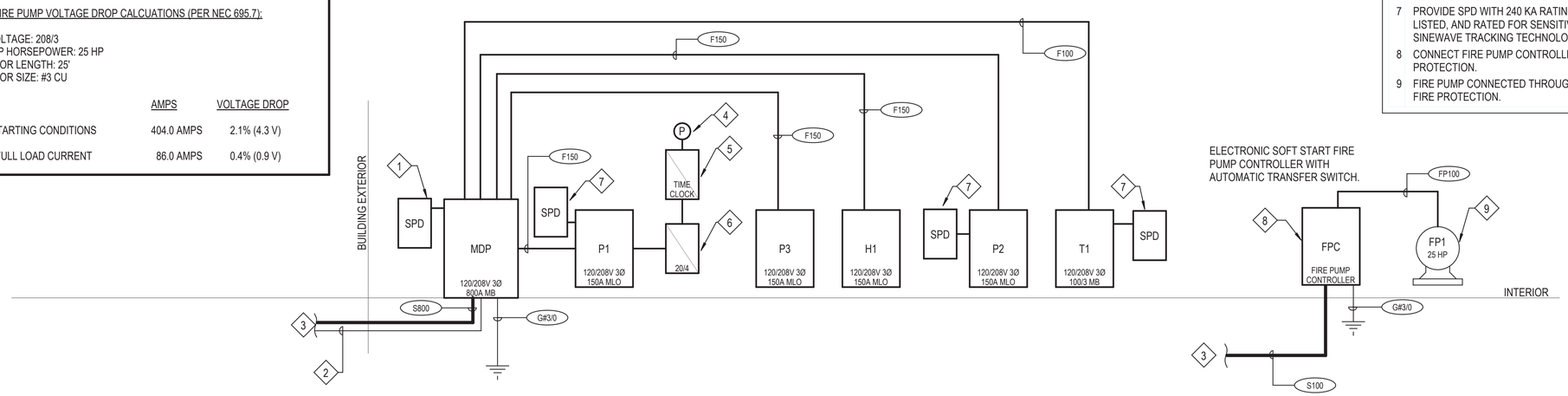

A2 ELECTRICAL RISER DIAGRAM
NTS

SYM	DESCRIPTION	DATE	APPR

NAVFAC

NORTH CAROLINA PROFESSIONAL ENGINEER SEAL 34954 JEFFERY T. RITSMAN 5/15/26

CRENSHAW CONSULTING Engineers
www.crenshaw-consulting.com
NC LICENSE #C-1166 5616 Bush Street, Suite 200 Raleigh, North Carolina 27609 919-871-1070 fax 871-5620

A/E INFO

APPROVED
FOR COMMANDER NAVFAC 5/15/2026
ACTIVITY

SATISFACTORY TO

DES	MKW	DRW	JDC	CHK	JTR
PM/DM	SGL/MDM				
BRANCH MANAGER	WRB				
CHIEF ENG/ARCH	JWJ				
FIRE PROTECTION	HPN				

DEPARTMENT OF THE NAVY
NAVAL FACILITIES ENGINEERING SYSTEMS COMMAND
NAVAL FACILITIES ENGINEERING SYSTEMS COMMAND ~ MIDATLANTIC
MIDLANT DC CORE
MARINE CORPS BASE
NAVAL STATION - NORFOLK, VA.
CAMP LEJEUNE, NC

P-1550 SOF MARINE RAIDER BATTALION / COMPANY / TEAM FACILITIES

ELECTRICAL RISER DIAGRAM

SCALE:	AS INDICATED
EPROJECT NO.:	1701820
CONSTR. CONTR. NO.	
NAVFAC DRAWING NO.	12903858
SHEET	116 OF 122

A3
CO STG

E-701

FINAL SUBMITTAL

DRAWFORM REVISION: 25 AUGUST 2020

File Path: M:\Camp Lejeune\MARSOC SOF Marine Bn HQ_Team (P-1550)\A3 STORAGE
Print Date: 5/6/2026 2:23:51 PM

ABBREVIATIONS

A	ABOVE COUNTER
AFF	ABOVE FINISHED FLOOR
C	CONDUIT
NIC	NOT IN CONTRACT
OC	ON CENTER
UON	UNLESS OTHERWISE NOTED
PR	PAIR
SFC	SURFACE-MOUNTED
TGB	TELCOMM GROUND BUS BAR
TMGB	TELCOMM MAIN GROUND BUS BAR
IDC	INSULATION DISPLACEMENT CONNECTOR
FOC	FIBER OPTIC CABLING
OSP	OUTSIDE PLANT
ISP	INSIDE PLANT
WP	WEATHER PROOF AND RATED FOR EXTERIOR TEMPERATURES

TELECOMMUNICATIONS NOTES

1. PROVIDE ALL COMMUNICATIONS CABLING, RACKS, CONDUITS, TERMINATIONS AND MISC. HARDWARE FOR CATV, CCTV, WAP, TELE/DATA, BACKBOARDS, AND PATHWAYS FOR COMPLETE AND OPERATIONAL COMMUNICATIONS SYSTEMS.
2. LABEL ALL OUTLETS / JACKS PER BASE PER CAMP LEJEUNE STANDARDS. AT COMPLETION, PROVIDE TEST REPORTS AND INSTALLED LOCATION AND NUMBERING OF ALL PORTS.
3. PROVIDE ONE 1-1/4" CONDUIT WITH TWO CAT6A CABLES FROM THE TELECOMMUNICATIONS RACK TO THE BUILDING FACP AND BMS MONITORING PANELS. PROVIDE DUAL LINES TO FACP. COORDINATE WITH FINAL LOCATION OF FACP AND BMS MONITORING PANELS.
4. REFER TO BASE TELECOMMUNICATIONS SPECIFICATION FOR ADDITIONAL INFORMATION AND REQUIREMENTS.
5. REFER TO TYPICAL TELECOM ROOM LAYOUT, RACK ELEVATION DETAIL AND TELEPHONE BACKBOARD DETAILS FOR ADDITIONAL INFORMATION AND REQUIREMENTS.
6. PROVIDE ALL LADDER RACKS, FITTINGS, BONDING JUMPERS, PATCH PANELS, WIRE MANAGEMENT DEVICES AND CABINETS AND FULLY CONNECT AND TEST ALL ELEMENTS. ALL CONDUITS TO BE SECURELY FASTENED AND FIRE STOPPED AND MUST OVERLAP THE BACKBOARD BY 3-6".
7. MAINTAIN 12" OF CLEARANCE ABOVE AND TO ONE SIDE OF ALL CABLE TRAY SYSTEMS FOR MAINTENANCE. CABLE TRAY SYSTEMS MUST BE PROVIDED WITH ALL NECESSARY COMPONENTS AND ACCESSORIES FOR A COMPLETE SYSTEM.
8. TELECOMMUNICATIONS CABLING MUST NOT EXCEED 295 FEET IN LENGTH BETWEEN PATCH PANEL AND WORK AREA OUTLET.
9. REFER TO LIFE SAFETY PLANS FOR LOCATIONS OF RATED WALLS.
10. HEIGHTS ARE TO THE BOTTOM OF THE DEVICE UNLESS NOTED OTHERWISE.

TELECOMMUNICATIONS LEGEND

N	TELECOMMUNICATIONS OUTLET - GREEN NETWORK. 18" AFF, UON,5" SQUARE X 2-7/8" DEEP BOX FOR GYPBOARD WALL OR 4-11/16" SQUARE X 2-7/8" DEEP BOX WITH MUD RING FOR CMU WALL. PROVIDE 1-1/4" CONDUIT STUBBED TO GREEN CABLE TRAY. PROVIDE (4) CAT6A CABLES TO GREEN PATCH PANEL. SEE TELECOMMUNICATIONS OUTLET DETAILS FOR ADDITIONAL INFORMATION.
W	TELECOMMUNICATIONS WALL OUTLET - 54" AFF, UON, 5" SQUARE X 2-7/8" DEEP BOX FOR GYPBOARD WALL OR 4-11/16" SQUARE X 2-7/8" DEEP BOX WITH MUD RING FOR CMU WALL. PROVIDE 1-1/4" CONDUIT STUBBED TO GREEN CABLE TRAY. PROVIDE (1) CAT6A CABLE TO GREEN PATCH PANEL. TERMINATE IN STUDDED WALL PLATE. SEE TELECOMMUNICATIONS OUTLET DETAILS FOR ADDITIONAL INFORMATION.
	TELEPHONE BACKBOARD - 4'W X 8'H X 3/4" FIRE-RATED PLYWOOD SHEETS IN QUANTITY AS REQUIRED TO COVER WALLS AS SHOWN ON PLANS (MINIMUM OF 2 SHEETS). PROVIDE #1/0 GROUND. SEE TELECOMM DETAILS FOR MORE INFORMATION.
WAP	WIRELESS ACCESS POINT - PROVIDE 5" SQUARE X 2-7/8" DEEP BOX WITH 1-1/4" CONDUIT TO NEAREST CABLE TRAY OR COMM ROOM. PROVIDE 2 PORT DUAL MOLDED 8P8C JACKSET AND (2) CAT6A UTP CABLES. MOUNT 6-12 INCHES ABOVE LAY-IN CEILING OR FLUSH WITH GYP CEILING, BUT NOT MORE THAN 35' AFF IN HIGH BAY AREAS.
	FA/DDC WALL OUTLET - HEIGHT AS INDICATED, 5" SQUARE X 2-7/8" DEEP BOX FOR GYPBOARD WALL OR 4-11/16" SQUARE X 2-7/8" DEEP BOX WITH MUD RING FOR CMU WALL. PROVIDE 1-1/4" CONDUIT STUBBED TO GREEN CABLE TRAY. PROVIDE (2) CAT6A CABLES TO GREEN PATCH PANEL. SEE TELECOMMUNICATIONS OUTLET DETAILS FOR ADDITIONAL INFORMATION.
J TV	RECESSED A/V WALL BACKBOX FOR FLAT PANEL DISPLAY - COORDINATE HEIGHT AND SIZE WITH USER. PROVIDE (1) 3/4" CONDUIT FOR POWER AND (2) 1-1/4" CONDUIT FOR A/V WITH PULL WIRE. PROVIDE ALL NECESSARY CONNECTION PORTS AND FACEPLATES.

SYM	DESCRIPTION	DATE	APPR

NAVFAC

NORTH CAROLINA PROFESSIONAL ENGINEER SEAL 34954 JEFFERY T. RITSMAN 5/13/26

SEAL

CRENSHAW CONSULTING Engineers
NC LICENSE #C-1166
www.crenshawconsulting.com
3516 Glenwood Avenue, Suite 200
Raleigh, North Carolina 27609
919-571-1070 Fax 571-5620

A/E INFO

APPROVED
James E. Scarborough, P.E.
FOR COMMANDER NAVFAC 5/13/2026
ACTIVITY

SATISFACTORY TO

DES	MKW	DRW	JDC	CHK	JTR

PM/DM	SGL/MDM
BRANCH MANAGER	WRB
CHIEF ENG/ARCH	JWJ
FIRE PROTECTION	HPN

DEPARTMENT OF THE NAVY
NAVAL FACILITIES ENGINEERING SYSTEMS COMMAND
NAVAL FACILITIES ENGINEERING SYSTEMS COMMAND – MIDATLANTIC
MIDLANT DC CORE
NAVAL STATION NORFOLK, VA
MARINE CORPS BASE
CAMP LEJEUNE, NC

P-1550 SOF MARINE RAIDER BATTALION / COMPANY / TEAM FACILITIES

TELECOMMUNICATIONS NOTES AND LEGEND

SCALE:	AS INDICATED
EPROJECT NO.:	1701820
CONSTR. CONTR. NO.	
NAVFAC DRAWING NO.	12903859
SHEET	117 OF 122

A3
CO STG

T-001

FINAL SUBMITTAL

DRAWFORM REVISION: 25 AUGUST 2020

File Path: M:\Camp Lejeune\MARSOC SOF Marine Bn HQ_Team (P-1550)\A3 STORAGE
Print Date: 5/6/2026 2:27:16 PM

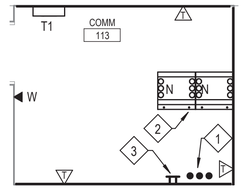

D2 ENLARGED COMM 113 TELECOMMUNICATIONS PLAN
1/4" = 1'-0"

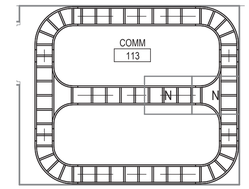

D3 ENLARGED COMM 113 LADDER RACK
1/4" = 1'-0"

PLAN NOTES

1. PROVIDE 3-4" CONDUITS (WITH PULL WIRE) FROM MANHOLE ON SITE ELECTRICAL PLANS TO SERVICE ENTRANCE. PROVIDE 50 PAIR OSP COPPER CABLING IN (1) 4" CONDUIT AND 24 STRAND SINGLE MODE FIBER OPTIC CABLING IN (1) 4" CONDUIT WITH 3X3 CELL MESH INNERDUCT. (1) 4" CONDUIT MUST REMAIN SPARE.
2. PROVIDE NEW COMM RACKS FOR TELECOMMUNICATIONS. PROVIDE PER BASE STANDARDS.
3. PROVIDE TMGB ON TELEPHONE BACKBOARD.
4. PROVIDE (2) CAT6A CABLES FOR HVAC CONTROLS. COORDINATE EXACT LOCATION WITH MECHANICAL.
5. PROVIDE DUAL DATA OUTLET AS INDICATED FOR FIRE ALARM/MASS NOTIFICATION SYSTEM. EXACT OUTLET LOCATION MUST BE CLOSELY COORDINATED WITH FIRE ALARM.

NOTE:

ALL COMM OUTLETS MUST BE HOMERUN BACK TO COMM ROOM.

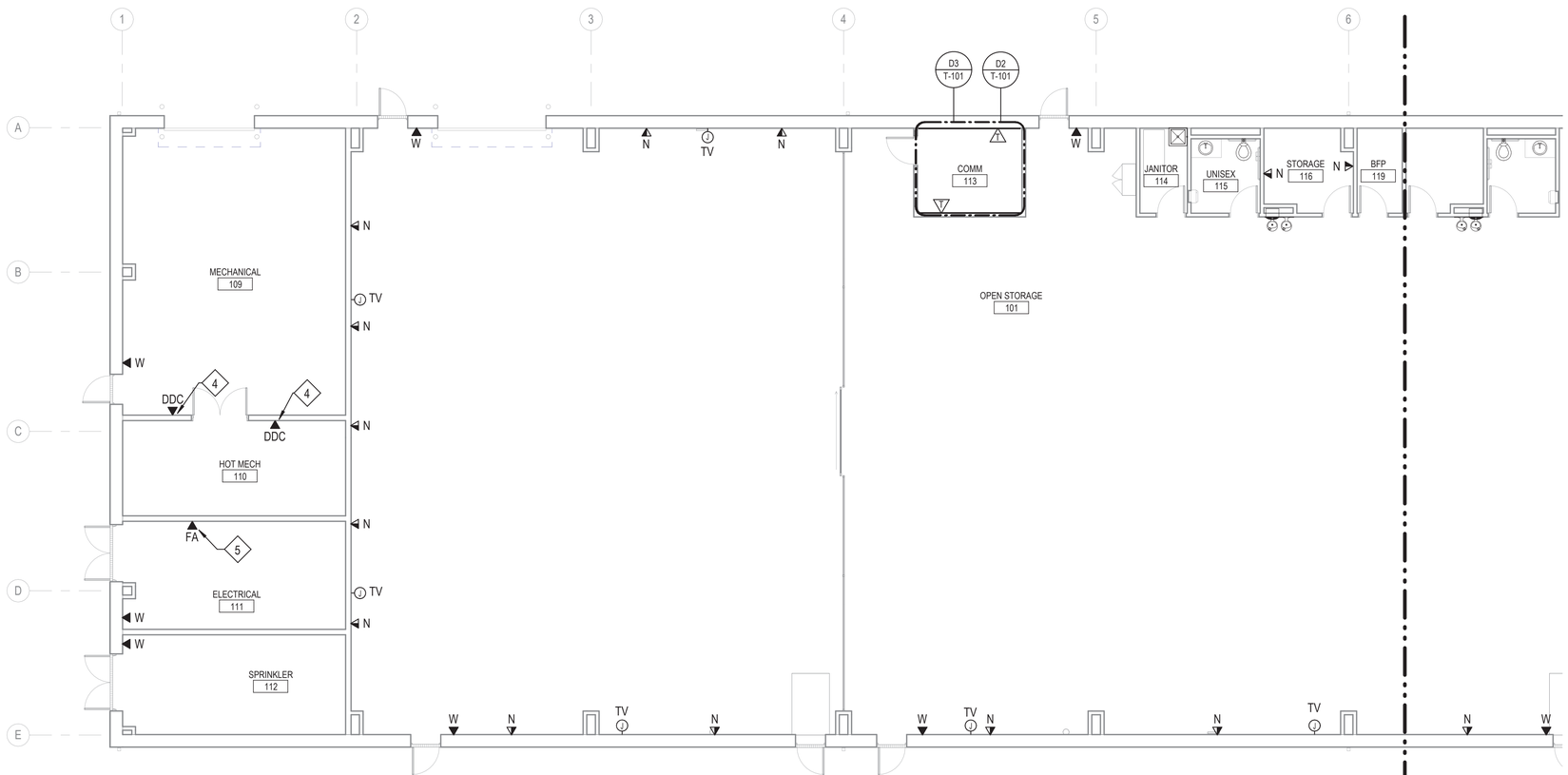

A3 FLOOR PLAN - AREA A TELECOMMUNICATIONS
1/8" = 1'-0"

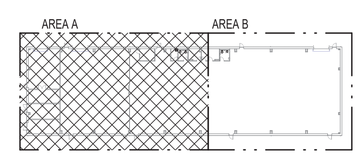

A5 KEYPLAN
1" = 60'-0"

GRAPHIC SCALE: 1/4"=1'-0" (4' 0 2' 4' 8')
GRAPHIC SCALE: 1/8"=1'-0" (8' 0 4' 8' 16')
GRAPHIC SCALE: 1"=60' (60' 0 60' 120')

SYM	DESCRIPTION	DATE	APPR

NAVFAC

NORTH CAROLINA PROFESSIONAL ENGINEER SEAL 34954 JEFFERY T. RITSEMAN 5/13/26

CRENSHAW CONSULTING engineers
NC LICENSE #C-1166 www.crenshawconsulting.com 5700 Duke Street, Suite 200 Raleigh, North Carolina 27609 919-871-9370 Fax 871-5620

A/E INFO

APPROVED
FOR COMMANDER NAVFAC 5/13/2026
ACTIVITY

SATISFACTORY TO

DES	MKW	DRW	JDC	CHK	JTR
PM/DM	SGL/MDM				
BRANCH MANAGER	WRB				
CHIEF ENG/ARCH	JWJ				
FIRE PROTECTION	HPN				

DEPARTMENT OF THE NAVY
NAVAL FACILITIES ENGINEERING SYSTEMS COMMAND
NAVAL FACILITIES ENGINEERING SYSTEMS COMMAND ~ MIDATLANTIC
MIDLANT DC CORE
NAVAL STATION - NORFOLK, VA.
MARINE CORPS BASE
CAMP LEJEUNE, NC

P-1550 SOF MARINE RAIDER BATTALION / COMPANY / TEAM FACILITIES

FLOOR PLAN - AREA A TELECOMMUNICATIONS

SCALE: AS INDICATED
EPROJECT NO.: 1701820
CONSTR. CONTR. NO.
NAVFAC DRAWING NO. 12903860
SHEET 118 OF 122

A3
CO STG

T-101

FINAL SUBMITTAL
DRAWFORM REVISION: 25 AUGUST 2020

File Path: M:\Camp Lejeune\MARSOC SOF Marine Bn HQ_Team (P-1550)\A3 STORAGE
Print Date: 5/6/2026 2:27:18 PM

PLAN NOTES

NOTE:

ALL COMM OUTLETS MUST BE HOMERUN BACK TO COMM ROOM.

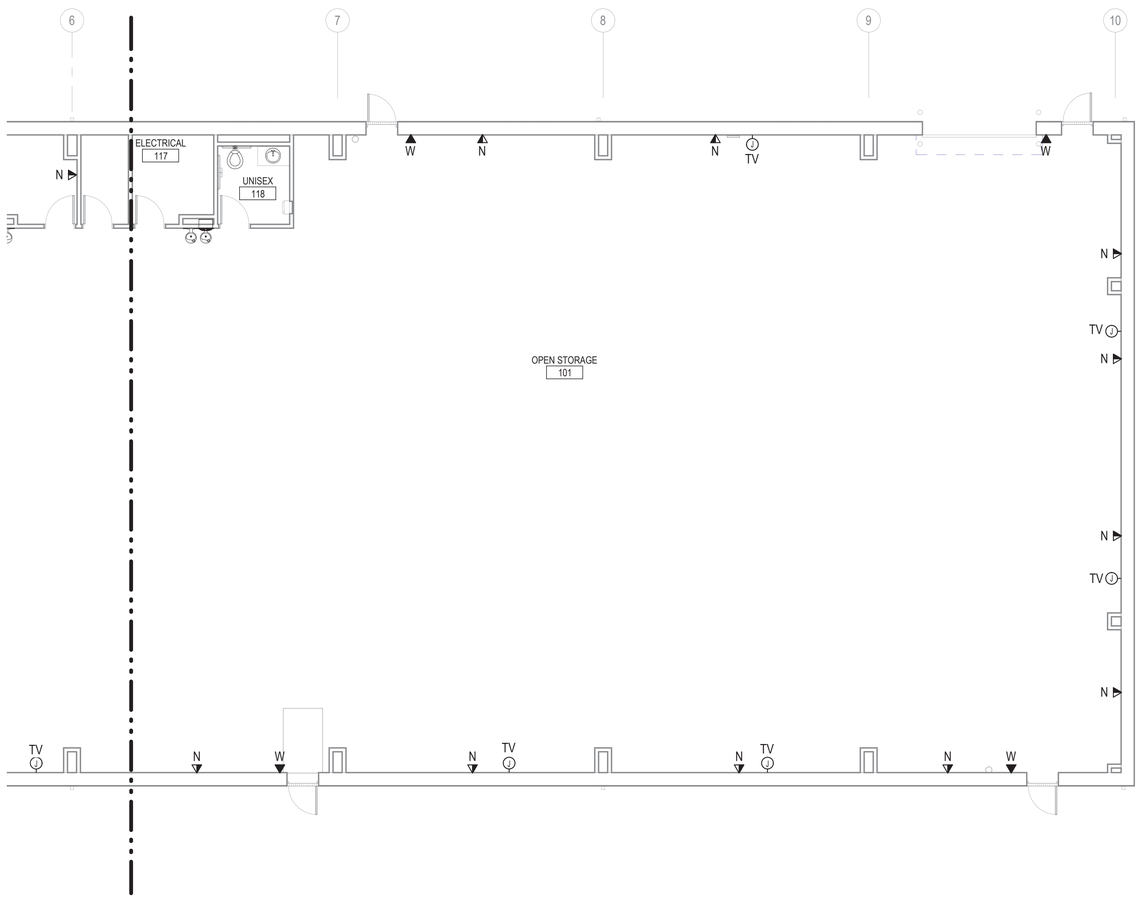

A3 FLOOR PLAN - AREA B TELECOMMUNICATIONS

1/8" = 1'-0"

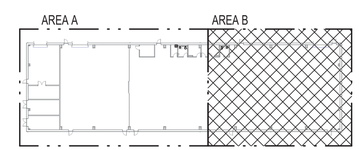

A5 KEYPLAN

1" = 60'-0"

GRAPHIC SCALE: 1/8"=1'-0"

8' 0 4' 8' 16'

GRAPHIC SCALE: 1"=60'

60' 0 60' 120'

N

SYM	DESCRIPTION	DATE	APPR

NAVFAC

NORTH CAROLINA PROFESSIONAL ENGINEER SEAL 34954 JEFFERY T. RITSCHMAN 5/13/26

SEAL

CRENSHAW CONSULTING engineers

NC LICENSE #C-1166 www.crenshawconsulting.com 3210 Blue Street, Suite 200 Raleigh, North Carolina 27609 919-871-1070 Fax 871-5620

A/E INFO

APPROVED

FOR COMMANDER NAVFAC 5/13/2026

ACTIVITY

SATISFACTORY TO

DES	MKW	DRW	JDC	CHK	JTR

PM/DM	SGL/MDM
BRANCH MANAGER	WRB
CHIEF ENG/ARCH	JWJ
FIRE PROTECTION	HPN

DEPARTMENT OF THE NAVY
NAVAL FACILITIES ENGINEERING SYSTEMS COMMAND
MIDLANT DC CORE
MARINE CORPS BASE

NAVAL FACILITIES ENGINEERING SYSTEMS COMMAND ~ MIDATLANTIC
NAVAL STATION - NORFOLK, VA.
CAMP LEJEUNE, NC

P-1550 SOF MARINE RAIDER
BATTALION / COMPANY / TEAM FACILITIES

FLOOR PLAN - AREA B TELECOMMUNICATIONS

SCALE:	AS INDICATED
EPROJECT NO.:	1701820
CONSTR. CONTR. NO.	
NAVFAC DRAWING NO.	12903861
SHEET	119 OF 122

A3
CO STG

T-102

FINAL SUBMITTAL

DRAWFORM REVISION: 25 AUGUST 2020

File Path: M:\Camp Lejeune\MARSOC SOF Marine Bn HQ_Team (P-1550)\A3 STORAGE
Print Date: 5/6/2026 2:27:19 PM

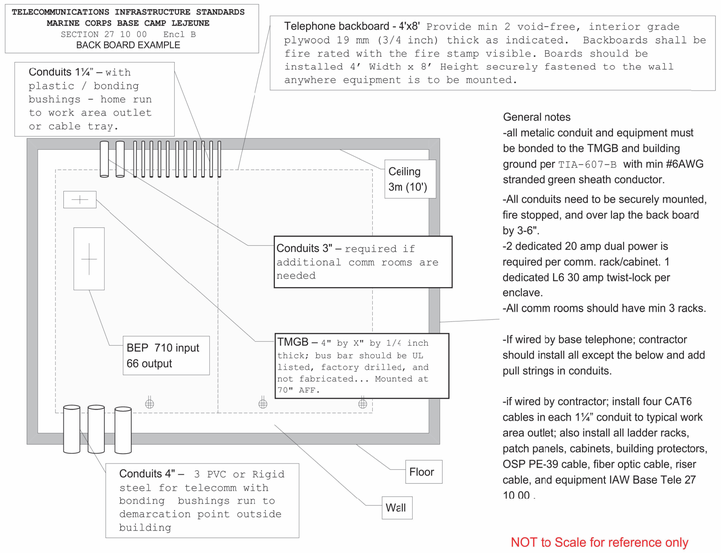

General notes

-all metalic conduit and equipment must be bonded to the TMGB and building ground per TIA-607-B with min #6AWG stranded green sheath conductor.

-All conduits need to be securely mounted, fire stopped, and over lap the back board by 3-6".

-2 dedicated 20 amp dual power is required per comm. rack/cabinet. 1 dedicated L6 30 amp twist-lock per enclave.

-All comm rooms should have min 3 racks.

-If wired by base telephone; contractor should install all except the below and add pull strings in conduits.

-if wired by contractor; install four CAT6 cables in each 1¼" conduit to typical work area outlet; also install all ladder racks, patch panels, cabinets, building protectors, OSP PE-39 cable, fiber optic cable, riser cable, and equipment IAW Base Tele 27 10 00 .

NOT to Scale for reference only

C1 TYPICAL BACKBOARD LAYOUT

NTS

On Backboard – PROTECTOR / BUILDING ENTRANCE (BEP), TMGB, Proper Bonding & Grounding, Cable Management and Slack on Ladder Rack. Ladder rack should be anchored from comm. rack to at least two walls.

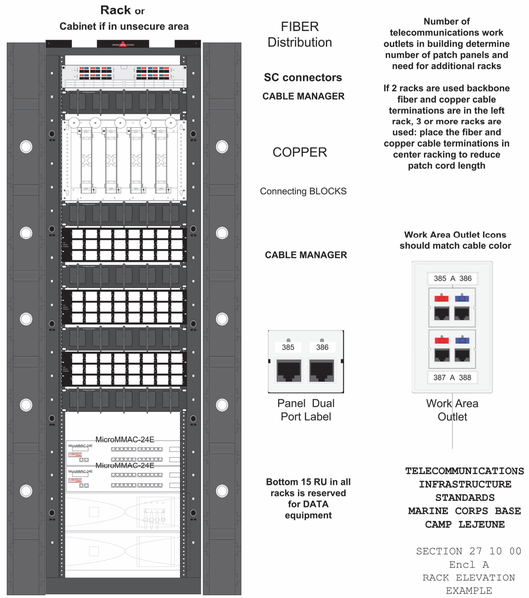

A1 TYPICAL RACK ELEVATION

NTS

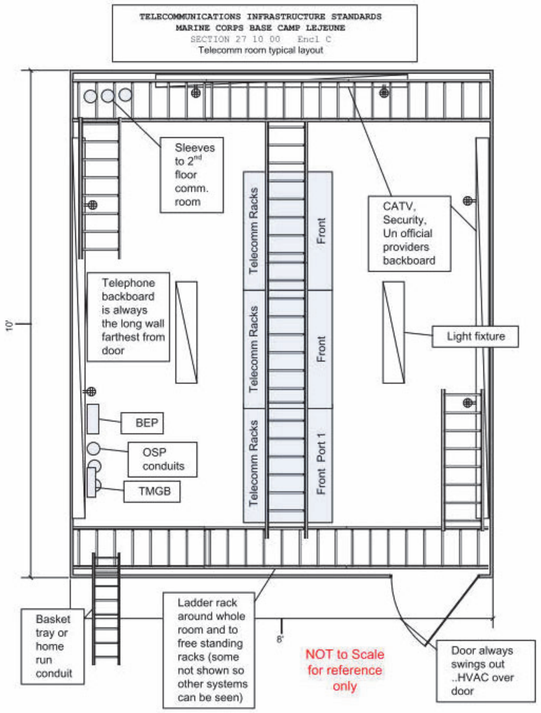

B3 TYPICAL COMM ROOM LAYOUT

NTS

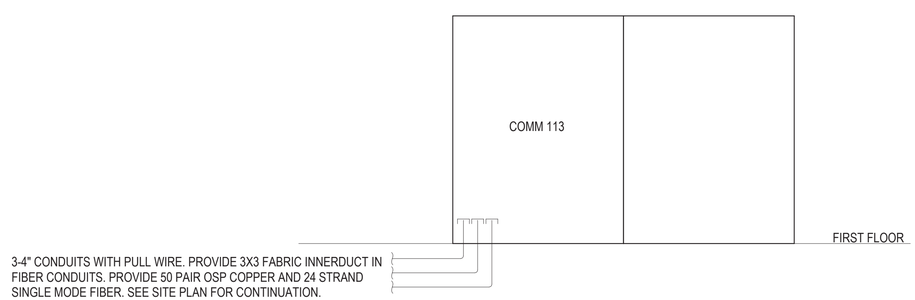

A3 TELECOMMUNICATIONS RISER DIAGRAM

NTS

NOTES:

1. PROVIDE ONE 1-1/4" CONDUIT WITH TWO CAT6A CABLES FROM THE TELECOMMUNICATIONS RACK TO THE BUILDING FACP AND BMS MONITORING PANELS. PROVIDE DUAL LINES TO FACP AND BMS. COORDINATE WITH FINAL LOCATION OF FACP AND BMS MONITORING PANELS.
2. COMPLY WITH ALL APPLICABLE BASE STANDARDS.
3. REFER TO TYPICAL TELECOM ROOM LAYOUT, RACK ELEVATION DETAIL AND TELEPHONE BACKBOARD DETAILS ON THIS SHEET FOR ADDITIONAL INFORMATION AND REQUIREMENTS.
4. PROVIDE ALL LADDER RACKS, FITTINGS, BONDING JUMPERS, PATCH PANELS, WIRE MANAGEMENT DEVICES AND CABINETS AND FULLY CONNECT AND TEST ALL ELEMENTS. ALL CONDUITS TO BE SECURELY FASTENED AND FIRE STOPPED AND MUST OVERLAP THE BACKBOARD BY 3-6".
5. ALL FIBER CONDUITS MUST BE PROVIDED WITH FABRIC MESH INNEDRDUCT.
6. PROVIDE REQUIRED SLACK IN COPPER AND FIBER CABLES.

SYM	DESCRIPTION	DATE	APPR

NAVFAC

NORTH CAROLINA PROFESSIONAL ENGINEER SEAL 34954 JEFFERY T. RITSMAN 5/5/26

SEAL

CRENSHAW CONSULTING Engineers
www.crenshaw-consulting.com
NC LICENSE #C-1166 3210 Blue Street, Suite 200 Raleigh, North Carolina 27609 919-871-9370 fax 871-5620

A/E INFO

APPROVED
SIGNED (PRINTED) BY
FOR COMMANDER NAVFAC 5/5/2026
ACTIVITY

SATISFACTORY TO

DES	MKW	DRW	JDC	CHK	JTR
PM/DM					SGL/MDM
BRANCH MANAGER					WRB
CHIEF ENG/ARCH					JWJ
FIRE PROTECTION					HPN

DEPARTMENT OF THE NAVY
NAVAL FACILITIES ENGINEERING SYSTEMS COMMAND
NAVAL FACILITIES ENGINEERING SYSTEMS COMMAND ~ MIDATLANTIC
MIDLANT DC CORE
MARINE CORPS BASE
NAVAL STATION - NORFOLK, VA
CAMP LEJEUNE, NC
P-1550 SOF MARINE RAIDER BATTALION / COMPANY / TEAM FACILITIES
TELECOMMUNICATIONS DETAILS

SCALE: AS INDICATED
EPROJECT NO.: 1701820
CONSTR. CONTR. NO.

NAVFAC DRAWING NO. 12903862
SHEET 120 OF 122

A3
CO STG
T-501

FINAL SUBMITTAL
DRAWFORM REVISION: 25 AUGUST 2020

File Path: M:\Camp Lejeune\MARSOC SOF Marine Bn HQ_Team (P-1550)\A3 STORAGE
Print Date: 5/6/2026 2:27:22 PM

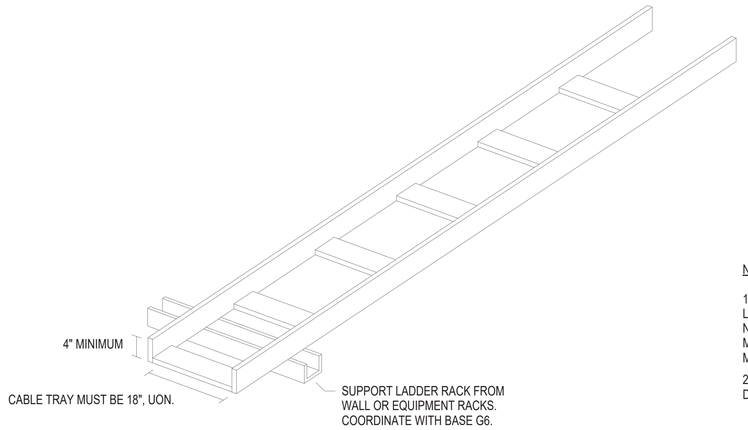

NOTES:

1. CONTRACTOR MUST PROVIDE PATHWAY FOR ALL LISTED SYSTEMS CABLING. TRAY MUST COMPLY WITH NEC FOR CABLE TRAY FILL REQUIREMENTS. IN NO CASE MAY THE CABLE TRAY BE LESS THAN THE STATED MINIMUM SIZE.
2. MOUNT CABLE TRAY AT APPROXIMATELY 7' **** AND DIRECTLY ABOVE RACKS IN COMM ROOMS.

C1 LADDER CABLE TRAY DETAIL
NTS

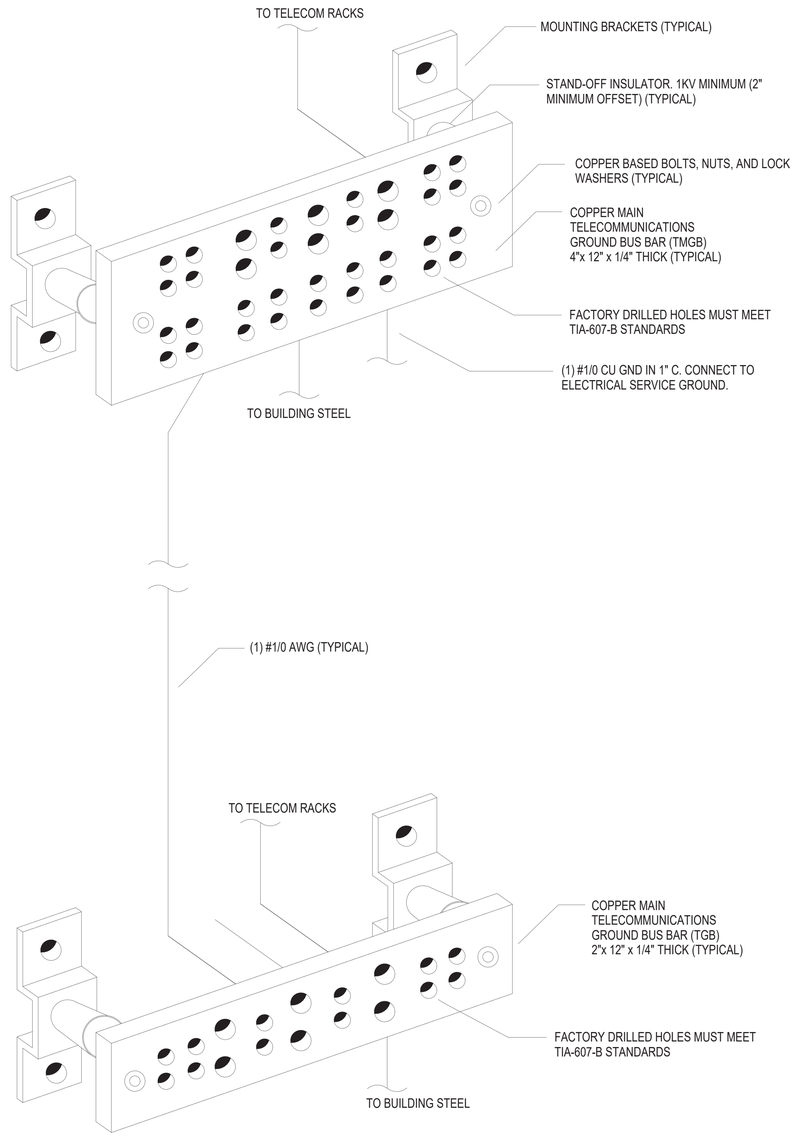

A4 TYPICAL GROUND BUS BAR DETAIL
NTS

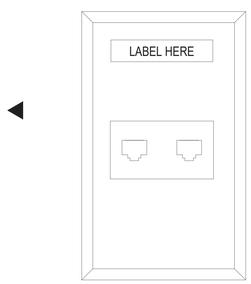

B1 TYPICAL DATA OUTLET
NTS

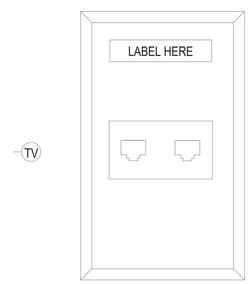

B2 TYPICAL CATV OUTLET
NTS

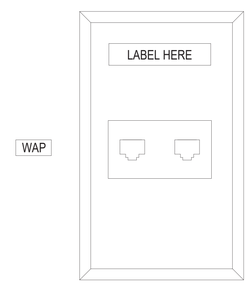

B3 TYPICAL WAP OUTLET
NTS

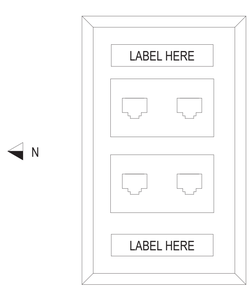

A1 TYPICAL GREEN OUTLET
NTS

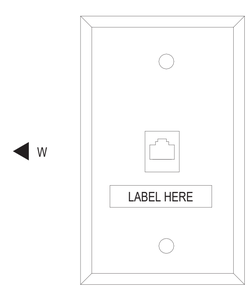

A2 TYPICAL WALL PHONE OUTLET
NTS

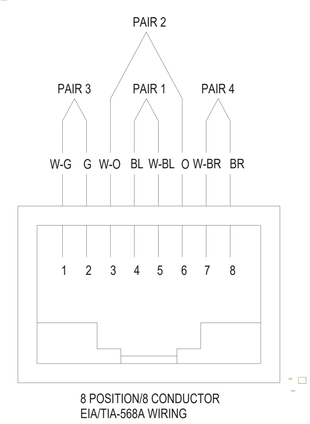

A3 8 PIN MODULAR CONNECTOR DETAIL
NTS

SYM	DESCRIPTION	DATE	APPR

NAVFAC

NORTH CAROLINA PROFESSIONAL ENGINEER SEAL 34954 JEFFERY T. BUSSMAN 5/13/26

SEAL

CRENSHAW CONSULTING engineers
NC LICENSE #C-1166
www.crenshawconsulting.com
3510 Shell Street, Suite 200
Raleigh, North Carolina 27609
919-871-1070 Fax 871-5620

A/E INFO

APPROVED
Jeffrey T. Bussman, P.E.
FOR COMMANDER NAVFAC 5/13/2026

ACTIVITY

SATISFACTORY TO

DES	MKW	DRW	JDC	CHK	JTR
PM/DM	SGL/MDM				
BRANCH MANAGER	WRB				
CHIEF ENG/ARCH	JWJ				
FIRE PROTECTION	HPN				

DEPARTMENT OF THE NAVY
NAVAL FACILITIES ENGINEERING SYSTEMS COMMAND
NAVAL FACILITIES ENGINEERING SYSTEMS COMMAND ~ MIDATLANTIC
NAVAL STATION - NORFOLK, VA.
MIDLANT DC CORE
MARINE CORPS BASE
CAMP LEJEUNE, NC

P-1550 SOF MARINE RAIDER BATTALION / COMPANY / TEAM FACILITIES

TELECOMMUNICATIONS DETAILS

SCALE: AS INDICATED
EPROJECT NO.: 1701820
CONSTR. CONTR. NO.
NAVFAC DRAWING NO. 12903863
SHEET 121 OF 122

A3
CO STG

T-502

FINAL SUBMITTAL

DRAWFORM REVISION: 25 AUGUST 2020

File Path: M:\Camp Lejeune\MARSOC SOF Marine Bn HQ_Team (P-1550)\A3 STORAGE
Print Date: 5/6/2026 2:27:22 PM

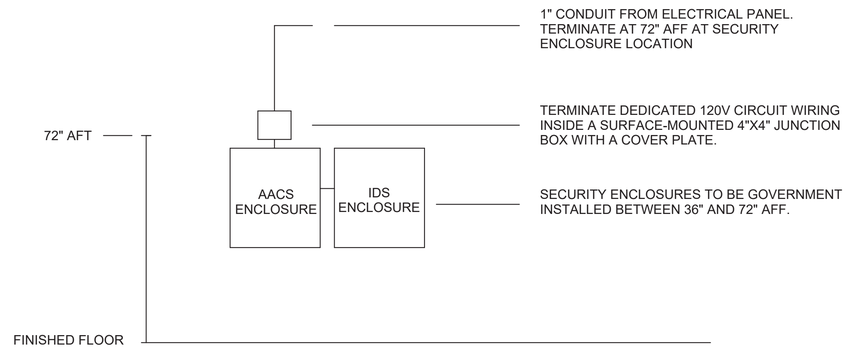

C3 DEDICATED POWER TO SUPPORT THE ELECTRONIC SECURITY SYSTEM'S PANELS.
NTS

SYM	DESCRIPTION	DATE	APPR

NAVFAC

NORTH CAROLINA PROFESSIONAL ENGINEER SEAL 34954 JEFFERY T. RITSMAN 5/13/26

SEAL

CRENSHAW CONSULTING Engineers
www.crenshawconsulting.com
NC LICENSE #C-1166 5700 Duke Street, Suite 200 Raleigh, North Carolina 27609 919-871-1670 Fax 871-5620

A/E INFO

APPROVED
DOCUMENT ON FILE
FOR COMMANDER NAVFAC 5/13/2026

ACTIVITY

SATISFACTORY TO

DES	MKW	DRW	JDC	CHK	JTR
PM/DM					SGL/MDM
BRANCH MANAGER					WRB
CHIEF ENG/ARCH					JWJ
FIRE PROTECTION					HPN

DEPARTMENT OF THE NAVY
NAVAL FACILITIES ENGINEERING SYSTEMS COMMAND
NAVAL FACILITIES ENGINEERING SYSTEMS COMMAND ~ MIDATLANTIC
MIDLANT DC CORE
NAVAL STATION - NORFOLK, VA.
MARINE CORPS BASE
CAMP LEJEUNE, NC

P-1550 SOF MARINE RAIDER BATTALION / COMPANY / TEAM FACILITIES

TELECOMMUNICATIONS DETAILS

SCALE: AS INDICATED
EPROJECT NO.: 1701820
CONSTR. CONTR. NO.

NAVFAC DRAWING NO.
12903864
SHEET 122 OF 122

A3
CO STG

T-503

FINAL SUBMITTAL

DRAWFORM REVISION: 25 AUGUST 2020

File Path: M:\Camp Lejeune\MARSOC SOF Marine Bn HQ_Team (P-1550)\A3 STORAGE
Print Date: 5/6/2026 2:27:23 PM